T894

CLYMER
SUPER
SHOP MANUAL

★★ALL NEW★★
INCLUDES:
PARTS PRICES
TIME ESTIMATING GUIDE

FORD
2- & 4-WHEEL DRIVE MID-SIZE
Ranger & Bronco II · 1983-1987

Gas & Diesel

- Over 500 pages of expert service information
- More than 750 photos and illustrations
- Full maintenance and troubleshooting data
- Complete teardown and overhaul procedures

FORD

2- & 4-WHEEL DRIVE MID-SIZE

Super Shop Manual

Ranger & Bronco II • 1983-1987

Gas & Diesel

By
KALTON C. LAHUE

ALAN AHLSTRAND
Editor

CLYMER PUBLICATIONS

World's largest publisher of books
devoted exclusively to do-it-yourself vehicle maintenance

A division of INTERTEC PUBLISHING CORPORATION
P.O. Box 12901, Overland Park, Kansas 66212

Copyright ©1987 Intertec Publishing Corporation

FIRST EDITION
First Printing December, 1986

SECOND EDITION
Updated by Kalton C. Lahue to include 1987 models
First Printing June 1987
Second Printing August, 1988

Printed in U.S.A.

ISBN: 0-89287-427-9



Production Coordinator, Andrea L. Dickerson

Technical assistance from Ford Training and Publications Department, Detroit, Michigan and Ford Service Training Center, La Mirada, California
Technical illustrations courtesy of Ford Motor Company.
Additional art by Mitzi McCarthy.
With thanks to W. Lanenbacher and Galpin Ford, Sepulveda, California
Special thanks to Mike Roeder, Mitchell Information Services, Inc.

All rights reserved. Reproduction or use, without express permission, of editorial or pictorial content, in any manner, is prohibited. No patent liability is assumed with respect to the use of the information contained herein. While every precaution has been taken in the preparation of this book, the publisher assumes no responsibility for errors or omissions. Neither is any liability assumed for damages resulting from use of the information contained herein. Publication of the servicing information in this manual does not imply approval of the manufacturers of the products covered.

All instructions and diagrams have been checked for accuracy and ease of application; however, success and safety in working with tools depend to a great extent upon individual accuracy, skill and caution. For this reason the publishers are not able to guarantee the result of any procedure contained herein. Nor can they assume responsibility for any damage to property or injury to persons occasioned from the procedures. Persons engaging in the procedure do so entirely at their own risk.

The Skill Level and Time Estimating Guide is prepared from copyrighted proprietary information of Mitchell International, Inc., San Diego, Ca., and is reproduced with their permisssion. Copyright ©1987 Mitchell International, Inc.

General Information 1
Troubleshooting 2
Lubrication, Maintenance and Tune-up 3
4-Cylinder Engine 4
V6 Engine 5
Fuel, Exhaust and Emission Control Systems 6
Cooling, Heating and Air Conditioning Systems 7
Electrical Systems 8
Clutch, Transmission and Transfer Case 9
Front Suspension and Steering (Two-Wheel Drive) 10
Rear Suspension, Drive Shaft, Axle and Differential 11
Front Suspension, Steering and Drive Train (4-Wheel Drive) 12
Brakes 13
Body 14
Index 15
Labor, Time and Parts Pricing Guide 16
Official Service Hints 17

CONTENTS

QUICK REFERENCE DATA ..... **IX**

CHAPTER ONE
GENERAL INFORMATION **1**

Manual organization
Notes, cautions and warnings
Safety first
Service hints
Torque specifications
Fasteners
Lubricants
Basic hand tools
Test equipment
Mechanic's techniques
Gasket sealant

CHAPTER TWO
TROUBLESHOOTING **16**

Starting system
Charging system (general)
EVR charging system
IRS charging system
Ignition system
Breakerless ignition troubleshooting
Fuel system (carburetted)
Fuel system (electronic fuel injection)
Emission control systems
Engine noises
Gasoline engine troubleshooting
Diesel engine troubleshooting
Clutch troubleshooting
Manual transmission troubleshooting
Automatic transmission troubleshooting
Differential troubleshooting
Brake system troubleshooting
Cooling system troubleshooting
Steering and suspension troubleshooting

CHAPTER THREE
LUBRICATION, MAINTENANCE AND TUNE-UP **43**

Hoisting, jacking and lift points
Towing
Weekly checks
Owner safety checks
Scheduled maintenance
(gasoline and diesel engines)
Gasoline engine tune-up
Diesel engine tune-up

CHAPTER FOUR
4-CYLINDER ENGINE **104**

Engine identification
Gasoline engine removal
Gasoline engine installation
Diesel engine removal
Diesel engine installation
Disassembly checklist
Front engine mounts
Rear engine support
Valve cover
Rocker arms and hydraulic lash adjuster
Intake manifold
Exhaust manifold
Manifold inspection
Camshaft belt outer cover
Camshaft belt
Sprocket and front seal replacement
Auxiliary shaft
Oil pan
Oil pump
Cylinder head
Camshaft
Rear main bearing seal
Flywheel or drive plate
Pilot bearing
Cylinder block cleaning and inspection
Core plugs

CHAPTER FIVE
V6 ENGINE 144

Engine identification
Engine removal
Engine installation
Disassembly checklist
Front engine mounts
Rear engine support
Rocker arm covers
Intake and exhaust manifolds (2.8L engine)
Intake and exhaust manifolds (2.9L engine)
Manifold inspection
Rocker arm assemblies
Crankshaft pulley
Front cover, seal and timing gears (2.8L V6)
Front cover, seal, sprockets and timing chain (2.9L V6)
Camshaft
Oil pan
Cylinder head
Valves and valve seats
Piston/connecting rod assembly
Crankshaft
Rear main bearing seal
Flywheel or drive plate
Pilot bearing
Cylinder block cleaning and inspection
Core plugs

CHAPTER SIX
FUEL, EXHAUST AND EMISSION CONTROL SYSTEMS 169

Air cleaner system (gasoline models)
Air cleaner (diesel models)
Fuel quality
Carburetor (4-cylinder)
Carburetor (2.8L V6)
Electronic fuel injection (EFI)
Fuel pump
Fuel tank and lines
Exhaust system
Gasoline engine emission control systems
Diesel engine emission control systems

CHAPTER SEVEN
COOLING, HEATING AND AIR CONDITIONING SYSTEMS 218

Cooling system
Cooling system flushing (4-cylinder)
Cooling system flushing (V6)
Cooling system checks
Thermostat (4 cylinder)
Thermostat (V6)
Radiator
Cooling fan
Water pump
Drive belts
Heater
Air conditioning
Get to know your vehicle's system
Routine maintenance
Refrigerant
Troubleshooting

CHAPTER EIGHT
ELECTRICAL SYSTEMS 246

Battery
Charging system
Starter
Dura-spark II ignition system
TFI-IV ignition system
Lighting system
Ignition switch
Headlight switch
Windshield wiper switch
Coolant temperature switch
Oil pressure switch/sending unit
Instruments
Windshield wiper/washer
Electrical circuit protection
Turn signals
Hazard flasher

CHAPTER NINE
CLUTCH, TRANSMISSION AND TRANSFER CASE 278

Clutch operation
Clutch hydraulic system (1983-1985)
Clutch hydraulic system (1986)
Clutch
Clutch interlock switch
Pilot bearing
Clutch housing
Manual transmission
Toyo Kogyo 4 and 5-speed transmission
Diesel 4-speed transmission
Mitsubishi 5-speed transmission
Transfer case
Borg Warner 13-50 transfer case
Borg Warner 13-50 electronic shift transfer case
Automatic transmission
Band adjustment

CHAPTER TEN
FRONT SUSPENSION AND STEERING (TWO-WHEEL DRIVE) 338

Front suspension (1979-1985)
Front suspension (1986)
Wheel alignment
Wheel bearings
Steering system
Steering wheel and column

CHAPTER ELEVEN
REAR SUSPENSION, AXLES, DRIVE SHAFT AND DIFFERENTIAL 366

Rear suspension
Rear axle and axle shafts
Drive shafts
Differential

CHAPTER TWELVE
FRONT SUSPENSION, STEERING AND DRIVE TRAIN (4-WHEEL DRIVE) 392

Front suspension
Wheel alignment
Front hubs
Wheel bearings
Steering system
Steering wheel and column

CHAPTER THIRTEEN
BRAKES 419

Front disc brakes
Rear drum brakes
Brake adjustment
Master cylinder
Power brake vacuum booster
Vacuum pump (diesel engine)
Pressure differential control valve
Stoplight switch replacement
Parking brake cables
Brake pedal

CHAPTER FOURTEEN
BODY 45

Radiator grille removal/installation
Stone deflector removal/installation
Front bumper removal/installation
Rear bumper removal/installation
Hood
Front fender removal/installation
Fender apron removal/installation
Doors
Door lock replacement
Tailgate removal/installation
Liftgate
Seats
Instrument panel removal/installation

INDEX 467

LABOR, TIME AND PARTS PRICING GUIDE 471

OFFICIAL SERVICE HINTS 483

QUICK REFERENCE DATA

CRANKSHAFT TIMING MARKS

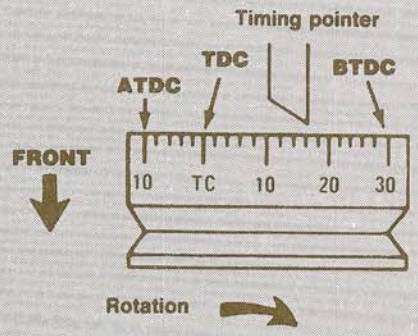

2.0L AND 2.3L 4-CYLINDER

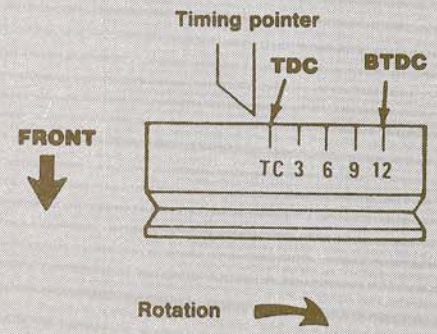

2.8L AND 2.9L V6

CYLINDER NUMBERING AND DISTRIBUTOR LOCATION

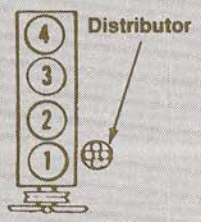

2.0L AND 2.3L 4-CYLINDER

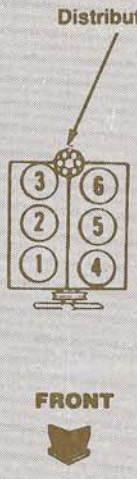

2.8L AND 2.9L V6

FIRING ORDER AND POSITION

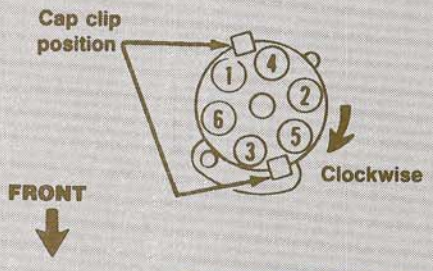

Firing order—1-4-2-5-3-6

2.8L AND 2.9L V6

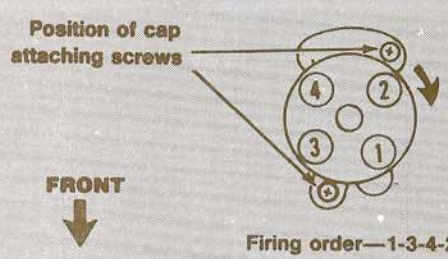

Firing order—1-3-4-2

2.0L AND 2.3L 4-CYLINDER

DRIVE BELT TENSION (LB.)

	New	Used[1]	Minimum
Gasoline engine			
1/4 in. V-belt			
1983-1984	50-80	40-60	40
1985-on	50-90	40-60	40
V-rib poly belt			
1983-1984	140-180	130-160	90
1985-on	150-190	140-160	90
Diesel engine [2]			
Fan/alternator	120-160	110-130	90
Vacuum pump	90-130	80-100	60
Accessories	150-190	140-160	90

1. A belt is considered used after 10 minutes of operation.
2. Figures given are for a cold engine. Add 20 lb. if engine is warm.

OIL VISCOSITY (GASOLINE ENGINE)

For best fuel economy and cold starting, select the lowest SAE viscosity grade oil for the expected temperature range.

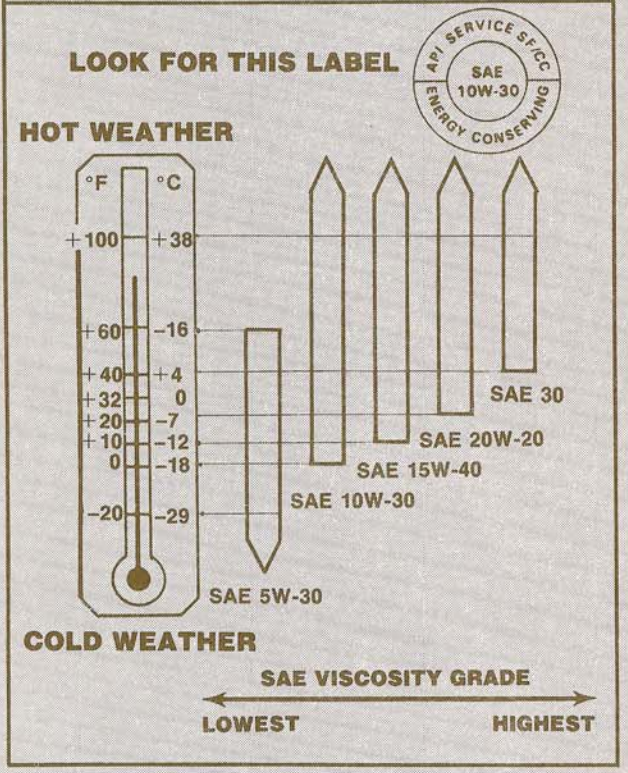

OIL VISCOSITY (DIESEL ENGINE)

Select the SAE grade oil based on the expected temperature range before next oil change.

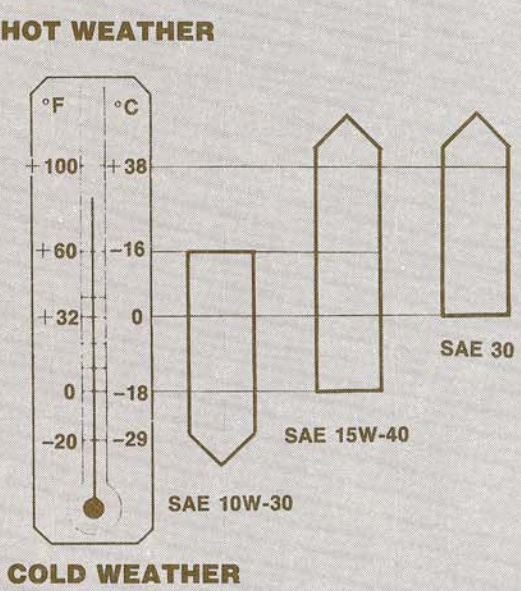

SF/CD QUALITY PREFERRED
SF/CC QUALITY ACCEPTABLE
DO NOT USE SAE 10W 40 GRADE OIL OR ANY OTHER GRADE NOT RECOMMENDED

RECOMMENDED LUBRICANTS

Crankcase	
Gasoline engine	API Service SF oil
Diesel engine	API Service SF/CD oil
Engine coolant	Ford cooling system fluid or equivalent meeting Ford spec. ESE-M97B44-A
Brake fluid	Ford Heavy-Duty or other DOT 3 or DOT 4 fluid
Power steering pump	Motorcraft Type F automatic transmission fluid
Manual steering gearbox	Ford multi-purpose lubricant part No. C1AZ-19590-B or equivalent
Manual transmission	Ford lubricant part No. D8DZ-19C547-Af or equivalent
Rear axle	Ford hypoid gear lubricant part No. EOAZ-19580-A or equivalent [1]
Front drive axle	Ford hypoid gear lubricant part No. C6AZ-19580-E or equivalent [2]
Automatic transmission	
C3 and A4LD	DEXRON II automatic transmission fluid
C5	Ford Type H automatic transmission fluid
Transfer case	DEXRON II automatic transmission fluid
Shift linkage	Ford multi-purpose lubricant part No. C1AZ-19590-B or equivalent
Front wheel bearings, brake and clutch pedal shaft	Ford multi-purpose lubricant part No. C1AZ-19590-B or equivalent
Spindle needle and thrust bearings	Ford multi-purpose lubricant part No. C1AZ-19590-B or equivalent
Throttle lever ball stud	Ford multi-purpose lubricant part No. C1AZ-19590-B or equivalent
Drive shaft, U-joint and slip spline	Ford multi-purpose lubricant part No. C1AZ-19590-B or equivalent
Transfer case front output slip yoke	Ford multi-purpose lubricant part No. C1AZ-19590-B or equivalent
Front axle hubs	Ford multi-purpose lubricant part No. C1AZ-19590-B or equivalent
Disc brake caliper	Ford disc brake caliper slide grease part No. D7AZ-19590-A or equivalent
Hood latch, all hinges	Ford polyethylene grease part No. D7AZ-19584-A or equivalent
Windshield washer	Ford washer solvent part No. C9AZ-19550-A or B
Key lock cylinders	Ford lock lubricant part No. D8AZ-19587-A or equivalent

1. Limited slip rear axle—add 4 oz. Ford friction modifier part No. C8AZ-19B546-A.
2. Limited slip front axle—add 2 oz. (1983-1984) or 1 oz. (1985-on) Ford friction modifier part No. C8AZ-19B546-A.

APPROXIMATE REFILL CAPACITIES

	Quart	Pint
Gasoline engine crankcase		
2.0L 4-cylinder		
With filter change		
1983-1984	4.5	
1985-on	5.0	
Without filter change		
1983-1984	4.0	
1985-on	4.5	
2.3L 4-cylinder		
With filter change		
1983-1984	4.5	
1985-on	6.0	
Without filter change		
1983-1984	4.0	
1985-on	5.5	
V6		
With filter change	5.0	
Without filter change	4.0	
Diesel engine crankcase		
2.2L diesel		
With main filter change	6.4	
With main and bypass filter change	7.0	
2.3L turbo diesel		
With main filter change	7.0	
Automatic transmission		
C5	7.5	
C3	8.0	
A4LD	9.0	
Manual transmission		
1983-1984		3.0
1985-on		3.6
Rear axle		
6 3/4 ring gear		3.0
7 1/2 ring gear		5.0
8.8 ring gear		5.5
Front drive axle	1.0	
Transfer case		
1983-1984		2.0
1985-on		3.0
Cooling system		
Gasoline engine		
4-cylinder		
With air conditioning	7.2	
Without air conditioning	6.5	
V6		
With air conditioning	7.8	
Without air conditioning	7.2	
Diesel engine		
With air conditioning	10.7	
Without air conditioning	10.2	

FORD

2- & 4-WHEEL DRIVE MID-SIZE

Super Shop Manual

Ranger & Bronco II • 1983-1987

Gas & Diesel

INTRODUCTION

This detailed, comprehensive manual covers all 1983-1987 Ford Ranger and Bronco II vehicles. The expert text gives complete information on maintenance, repair and overhaul. Step-by-step instructions and hundreds of illustrations guide you through jobs ranging from simple maintenance to complete overhaul.

This manual can be used by anyone from a first-time do-it-yourselfer to a professional mechanic. Easy to read type, detailed drawings and clear photographs give you all the information you need to do the work right.

Where repairs are practical for the owner/mechanic, complete procedures are given. Where special tools are required and recommended, their designations are provided. Such tools may often be borrowed or rented or can be purchased directly from Owatonna Tools, Inc., Attn: Ford Order Desk, Owatonna, Minnesota 55060.

Equally important, difficult jobs are pointed out. Such operations are usually more economically performed by a dealer or an independant garage.

A shop manual is a reference. You want to be able to find information fast. As in all Clymer books, this one is designed with that in mind. All chapters are thumb tabbed. Finally, all the most frequently used specifications and capacities are summarized on the *Quick Reference* pages at the front of the book.

Keep this shop manual handy in your tool box and use it often. It can save you hundreds of dollars in maintenance and repair bills and keep your vehicle reliable and performing well.

CHAPTER ONE

GENERAL INFORMATION

Troubleshooting, tune-up, maintenance and repair are not difficult, if you know what tools and equipment to use and what to do. Anyone not afraid to get their hands dirty, of average intelligence and with some mechanical ability can perform most of the procedures in this manual.

Due to the number of vehicle/powertrain combinations used over the period covered by this manual, many of the procedures provided are somewhat general in nature and may require some interpretation. Every effort has been made, however, to be as specific as possible.

Some of the procedures require the use of special tools. The resourceful mechanic can, in many cases, think of acceptable substitutes for special tools—there is always another way. However, using a substitute for a special tool is not recommended as it can be dangerous to you and may damage the part.

MANUAL ORGANIZATION

This chapter provides general information useful to vehicle owners and mechanics. It also discusses the tools and techniques for preventive maintenance, troubleshooting and repair.

Chapter Two describes typical equipment problems and provides logical and specific troubleshooting procedures.

Following chapters describe specific systems, providing disassembly, repair, assembly and adjustment procedures in simple step-by-step form. Specifications concerning a specific system are included at the end of the appropriate chapter.

U.S. standards are used throughout and are accompanied by metric equivalents in parentheses where such reference might have practical value. Metric to U.S. conversion is given in **Table 1**.

NOTES, CAUTIONS AND WARNINGS

The terms NOTE, CAUTION and WARNING have specific meanings in this manual. A NOTE provides additional information to make a step or procedure easier or clearer. Disregarding a NOTE could cause inconvenience, but would not cause damage or personal injury.

A CAUTION emphasizes areas where equipment damage could occur. Disregarding a CAUTION could cause permanent mechanical damage; however, personal injury is unlikely.

A WARNING emphasizes areas where personal injury or even death could result from negligence. Mechanical damage may also occur. WARNINGS *are to be taken seriously.* In some cases, serious injury or death has resulted from disregarding such warnings.

SAFETY FIRST

Professional mechanics can work for years and never suffer a serious injury. If you follow a few rules of common sense and safety, you too can enjoy many safe hours servicing your vehicle. You can hurt yourself or damage the equipment if you ignore these rules.

1. Never use gasoline as a cleaning solvent.
2. Never smoke or use a torch near flammable liquids such as cleaning solvent. If you are working in your home garage, remember that your home gas appliances have pilot lights.
3. Never smoke or use a torch in an area where batteries are being charged. Highly explosive hydrogen gas is formed during the charging process.
4. Never arc the terminals of a battery to see if it is charged. The sparks can ignite the explosive hydrogen as easily as an open flame.
5. If welding or brazing is required on the vehicle, make sure that it is not in the area of the fuel tank or lines. In such cases, the work should be entrusted to a specialist.
6. Always use the correct size wrench for loosening and tightening fasteners. This will prevent damage to the fastener and possible injury to yourself.
7. When replacing a fastener, make sure to use one with the same measurements and strength as the old one. Incorrect or mismatched fasteners can result in damage to the vehicle and possible personal injury.
8. Keep your work area clean, uncluttered and well lighted.
9. Wear safety goggles during all operations involving drilling, grinding, use of a cold chisel or snap ring removal.
10. Never use worn tools or tools that are not appropriate to the job.
11. Keep an approved fire extinguisher nearby. Be sure it is rated for gasoline (Class B) and electrical (Class C) fires.
12. When drying bearings or other rotating parts with compressed air, never allow the air jet to rotate the bearing or part; the jet is capable of rotating them at speeds far in excess of those for which they were designed. The likelihood of a bearing or rotating part disintegrating and causing serious injury and damage is very great.

SERVICE HINTS

Time, effort and frustration can be saved by following the practices suggested here.

1. "Front," as used in this manual, refers to the front of the vehicle; the front of any component is the end closest to the front of the vehicle. The left side of the vehicle is the driver's side; the right side of the vehicle is the passenger side.
2. Never trust any jack, mechanical or hydraulic. Use jackstands to hold the vehicle when working under it. Always set the parking brake and block the wheels that remain on the ground.
3. Disconnect the negative battery cable when working on or near the electrical system and before disconnecting any wires. On most batteries, the negative terminal will be marked with a minus (–) sign and the positive terminal with a plus (+) sign. Never run the engine with the battery disconnected, as this can cause serious damage to the alternator.
4. When disassembling a part or component, it is a good practice to tag the parts for location and mark all parts which mate together for location. Small parts, such as bolts, can be identified by placing them in plastic sandwich bags. Seal the bags and label them with masking tape and a marking pen. When reassembly will take place immediately, an accepted practice is to place the nuts and bolts in a cupcake tin or egg carton in the order of disassembly.
5. Finished surfaces should be protected from physical damage or corrosion. Keep gasoline and brake fluid off painted surfaces.
6. Use penetrating oil on frozen or tight bolts, then strike the bolt head a few times with a hammer and punch (use a screwdriver on screws). Avoid the use of heat where possible, as it can warp, melt or affect the temper of parts. Heat also ruins finishes, especially paint and plastics.
7. Keep flames and sparks away from a charging battery or flammable fluids and do not smoke in the area. It is a good idea to have a fire extinguisher handy in the work area. Remember that many gas appliances in home garages (water heater, clothes drier, etc.) have pilot lights.
8. No parts removed or installed in the procedures given in this manual should require unusual force

during disassembly or assembly. If a part is difficult to remove or install, find out why before proceeding.

9. Cover all openings after removing parts or components to prevent dirt, small tools, etc. from falling in.

10. Read each procedure *completely* while looking at the actual parts before starting a job. Make sure you *thoroughly* understand what is to be done and then carefully follow the procedure, step by step.

11. Recommendations are occasionally made to refer service or maintenance to a dealer or a specialist in a particular field. In these cases, the work will probably be done more quickly and economically than if you performed the job yourself.

12. In procedural steps, the term "replace" means to discard a defective part and replace it with a new or exchange unit. "Overhaul" means to remove, disassemble, inspect, measure, repair or replace defective parts, reassemble and install major systems and parts.

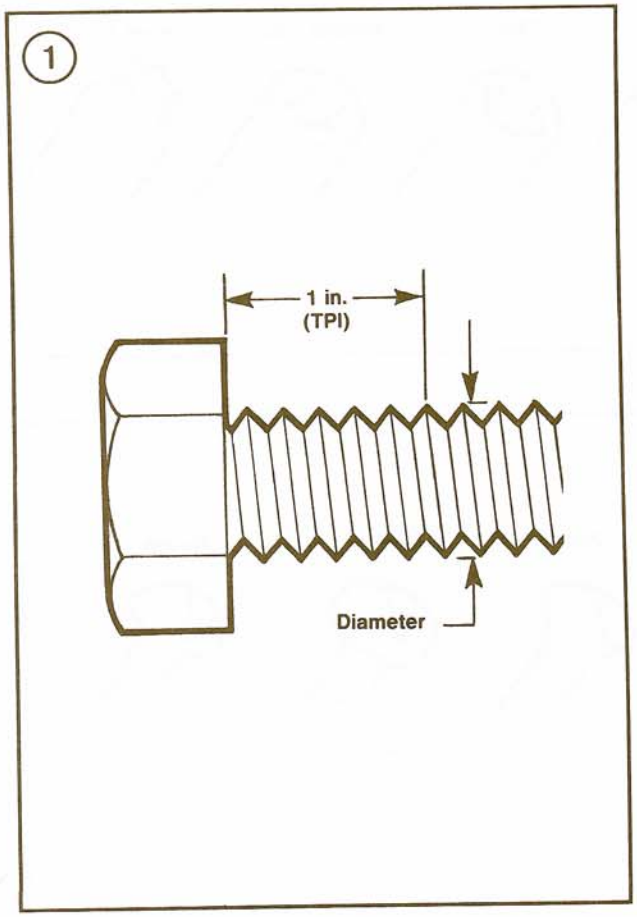

TORQUE SPECIFICATIONS

Torque specifications throughout this manual are given in foot-pounds (ft.-lb.) and Newton meters (N•m). Newton meters are being adopted in place of meter-kilograms in accordance with the International Modernized Metric System. Existing torque wrenches calibrated in meter-kilograms can be used by performing a simple conversion: move the decimal point one place to the right. For example, 4.7 mkg = 47 N•m. This conversion is accurate enough for mechanics' use even though the exact mathematical conversion is 3.5 mkg = 34.3 N•m.

FASTENERS

The materials and designs of the various fasteners used on automotive parts are not arrived at by chance or accident. Fastener design determines the type of tool required to work with the fastener. Fastener material is carefully selected to decrease the possibility of physical failure.

Threads

Nuts, bolts and screws are manufactured in a wide range of thread patterns. To join a nut and bolt, the diameter of the bolt and the diameter of the hole in the nut must be the same. It is just as important that the threads on both be properly matched.

The best way to tell if the threads on 2 fasteners are matched is to turn the nut on the bolt (or the bolt into the threaded hole in a piece of equipment) with fingers only. Be sure both pieces are clean. If much force is required, check the thread condition on each fastener. If the thread condition is good but the fasteners jam, the threads are not compatible.

Four important specifications describe every thread:

a. Diameter.
b. Threads per inch.
c. Thread pattern.
d. Thread direction.

Figure 1 shows the first 2 specifications. Thread pattern is more subtle. Italian and British standards exist, but the most commonly used by automotive manufacturers are American standard and metric standard. The threads are cut differently as shown in **Figure 2.**

Most threads are cut so that the fastener must be turned clockwise to tighten it. These are called right-hand threads. Some fasteners have left-hand threads; they must be turned counterclockwise to be tightened. Left-hand threads are used in locations where normal rotation of the equipment would tend to loosen a right-hand threaded fastener.

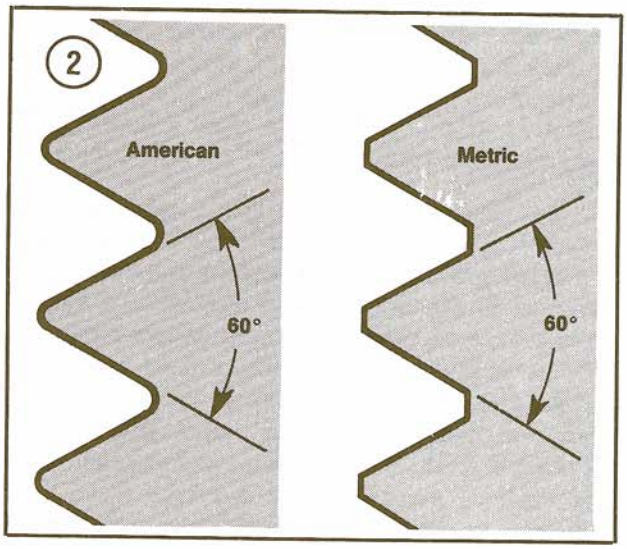

Machine Screws

There are many different types of machine screws. **Figure 3** shows a number of screw heads requiring different types of turning tools. Heads are also designed to protrude above the metal (round) or to be slightly recessed in the metal (flat) (**Figure 4**).

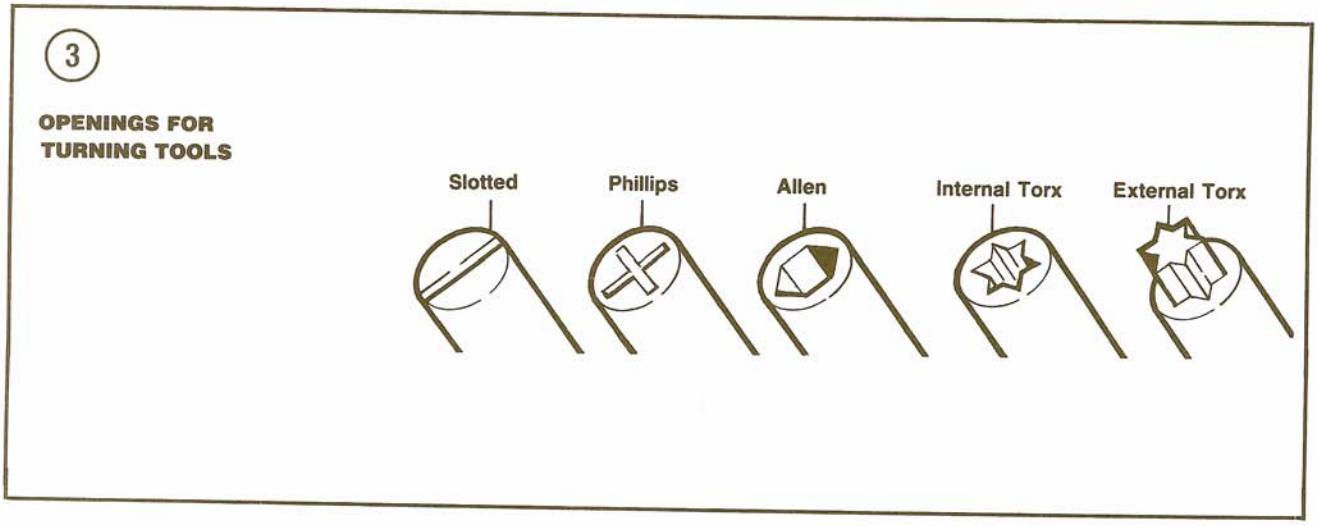

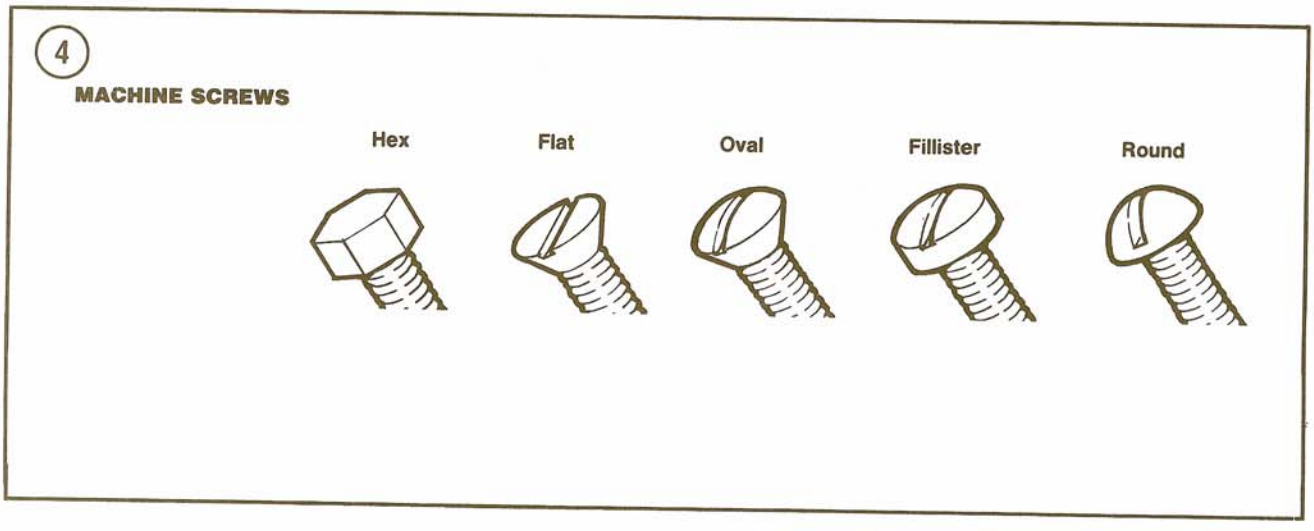

5

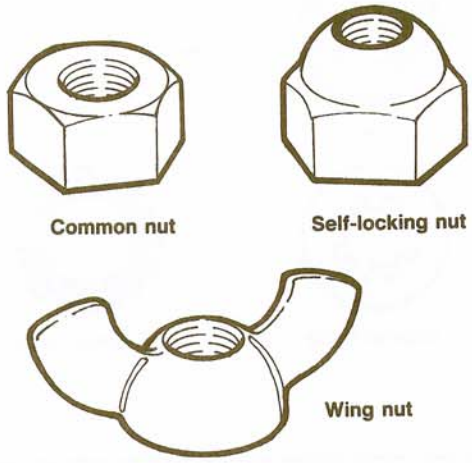

6



Bolts

Commonly called bolts, the technical name for these fasteners is cap screw. They are normally described by diameter, threads per inch and length. For example, 1/4-20×1 indicates a bolt 1/4 in. in diameter with 20 threads per inch, 1 in. long. The measurement across 2 flats on the head of the bolt indicates the proper wrench size to be used.

Nuts

Nuts are manufactured in a variety of types and sizes. Most are hexagonal (6-sided) and fit on bolts, screws and studs with the same diameter and threads per inch.

Figure 5 shows several types of nuts. The common nut is generally used with a lockwasher. Self-locking nuts have a nylon insert which prevents the nut from loosening; no lockwasher is required. Wing nuts are designed for fast removal by hand. Wing nuts are used for convenience in non-critical locations.

To indicate the size of a nut, manufacturers specify the diameter of the opening and the threads per inch. This is similar to bolt specification, but without the length dimension. The measurement across 2 flats on the nut indicates the proper wrench size to be used.

Prevailing Torque Fasteners

Several types of bolts, screws and nuts incorporate a system that develops an interference between the bolt, screw, nut or tapped hole threads. Interference is achieved in various ways: by distorting threads, coating threads with dry adhesive or nylon, distorting the top of an all-metal nut, using a nylon insert in the center or at the top of a nut, etc.

Prevailing torque fasteners offer greater holding strength and better vibration resistance and are commonly used on late-model vehicle components such as carburetors. Some prevailing torque fasteners can be reused if in good condition; others like the trilobial screw shown in **Figure 6** are thread-rolling screws which form their own threads when installed and cannot be removed without displacement of the thread pattern. For greatest safety, it is recommended that you install new prevailing torque fasteners whenever they are removed.

Washers

There are 2 basic types of washers: flat washers and lockwashers. Flat washers are simple discs with a hole to fit a screw or bolt. Lockwashers are designed to prevent a fastener from working loose due to vibration, expansion and contraction. **Figure 7** shows several types of washers. Note that flat washers are often used between a lockwasher and a fastener to provide a smooth bearing surface. This allows the fastener to be turned easily with a tool.

Cotter Pins

Cotter pins (**Figure 8**) are used to secure special kinds of fasteners. The threaded stud must have a hole in it; the nut or nut lock piece has castellations around which the cotter pin ends wrap. Cotter pins should not be reused after removal.

Snap Rings

Snap rings can be an internal or external design. They are used to retain items on shafts (external type) or within tubes (internal type). In some applications, snap rings of varying thicknesses are used to control the end play of parts assemblies. These are often called selective snap rings. Snap rings can be reused if not distorted during removal, but it is a good idea to discard them and install new ones whenever possible.

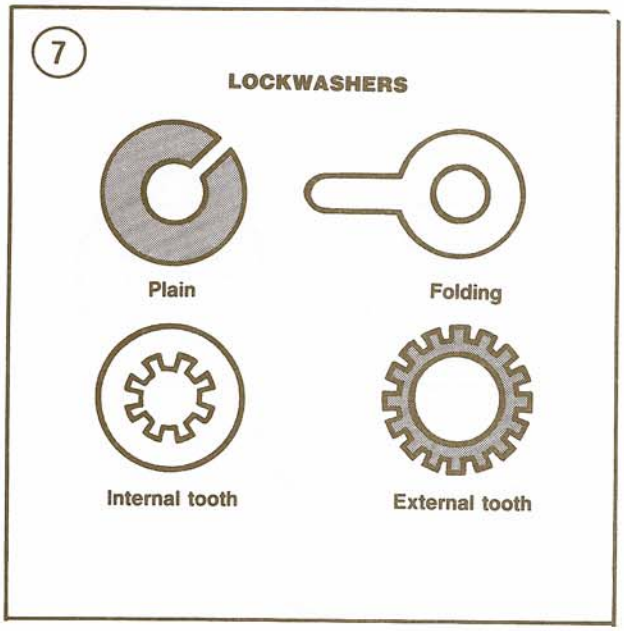

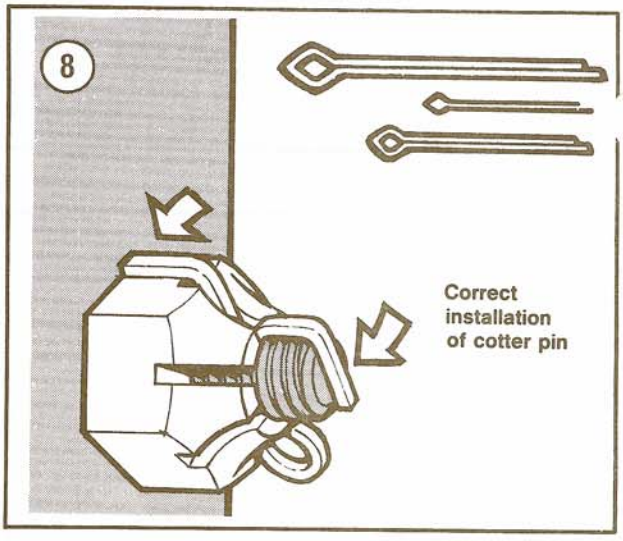

LUBRICANTS

Periodic lubrication assures long life for any type of equipment. The *type* of lubricant used is just as important as the lubrication service itself, although in an emergency the wrong type of lubricant is better than none at all. The following paragraphs describe the types of lubricants most often used on automotive equipment. Be sure to follow the manufacturer's recommendations for lubricant types.

Generally, all liquid lubricants are called "oil." They may be mineral-based (including petroleum bases), natural-based (vegetable and animal bases), synthetic-based or emulsions (mixtures). "Grease" is an oil to which a thickening base has been added so that the end product is a semi-solid. Grease is often classified by the type of thickener added; lithium soap is commonly used.

Engine Oil

Oil for automotive engines is graded by the American Petroleum Institute (API) and the Society of Automotive Engineers (SAE) in several categories. Oil containers display these ratings on the top or label.

API oil grade is indicated by letters; oils for gasoline engines are identified by an "S" while oils for diesel engines are identified by a "C." The gasoline engines covered in this manual require SF or SF graded oil. The diesel engines use CC or CD graded oil.

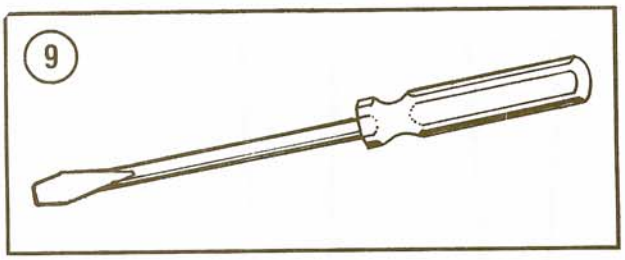

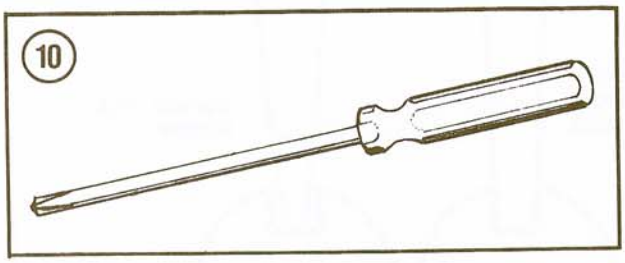

Viscosity is an indication of the oil's thickness. The SAE uses numbers to indicate viscosity; thin oils have low numbers while thick oils have high numbers. A "W" after the number indicates that the viscosity testing was done at low temperature to simulate cold-weather operation. Engine oils fall into the 5W-30 and 20W-50 range.

Multi-grade oils (for example, 10W-40) are less viscous (thinner) at low temperatures and more viscous (thicker) at high temperatures. This allows the oil to perform efficiently across a wide range of engine operating conditions. The lower the number, the better the engine will start in cold climates. Higher numbers are usually recommended for engine running in hot weather conditions.

The label may also carry the words "energy conserving." This indicates that the oil has been formulated to reduce friction between moving engine parts.

Gear Oil

Gear lubricants are assigned SAE viscosity numbers under the same system as engine oil. Gear lubricant falls into the SAE 72-250 range. Some gear lubricants are multi-grade; for example, SAE 85W-90.

Various additives are incorporated in gear oils to tailor them for specific uses; these additive packages are graded by the API and identified by the letters "GL" and a number. GL-4 and GL-5 are the most commonly used.

Grease

Greases are graded by the National Lubricating Grease Institute (NLGI). Greases are graded by number according to the consistency of the grease; these ratings range from No. 000 to No. 6, with No. 6 being the most solid. A typical multipurpose grease is NLGI No. 2. For specific applications, equipment manufacturers may require grease with an additive such as molybdenum disulfide (MOS2).

BASIC HAND TOOLS

Many of the procedures in this manual can be carried out with simple hand tools and test equipment familiar to the average home mechanic. Keep your tools clean and in a tool box. Keep them organized with the sockets and related drives together, the open-end and box wrenches together, etc. After using a tool, wipe off dirt and grease with a clean cloth and return the tool to its correct place.

The following tools are required to perform virtually any repair job. Each tool is described and the recommended size given for starting a tool collection. Additional tools and some duplicates may be added as you become more familiar with the equipment. You may need all English size tools, all metric size tools or a combination of both.

Screwdrivers

The screwdriver is a very basic tool, but if used improperly it will do more damage than good. The slot on a screw has a definite dimension and shape. A screwdriver must be selected to conform with that shape. Use a small screwdriver for small screws and a large one for large screws or the screw head will be damaged.

Two types of screwdrivers are required: a common (flat-blade) screwdriver (**Figure 9**) and Phillips screwdrivers (**Figure 10**).

Screwdrivers are available in sets which often include an assortment of common and Phillips blades. If you buy them individually, buy at least the following:

a. Common screwdriver—5/16×6 in. blade.
b. Common screwdriver—3/8×12 in. blade.
c. Phillips screwdriver—size 2 tip, 6 in. blade.

Use screwdrivers only for driving screws. Never use a screwdriver for prying or chiseling. Do not try to remove a Phillips or Allen head screw with a common screwdriver (unless the screw has a combination head that will accept either type); you

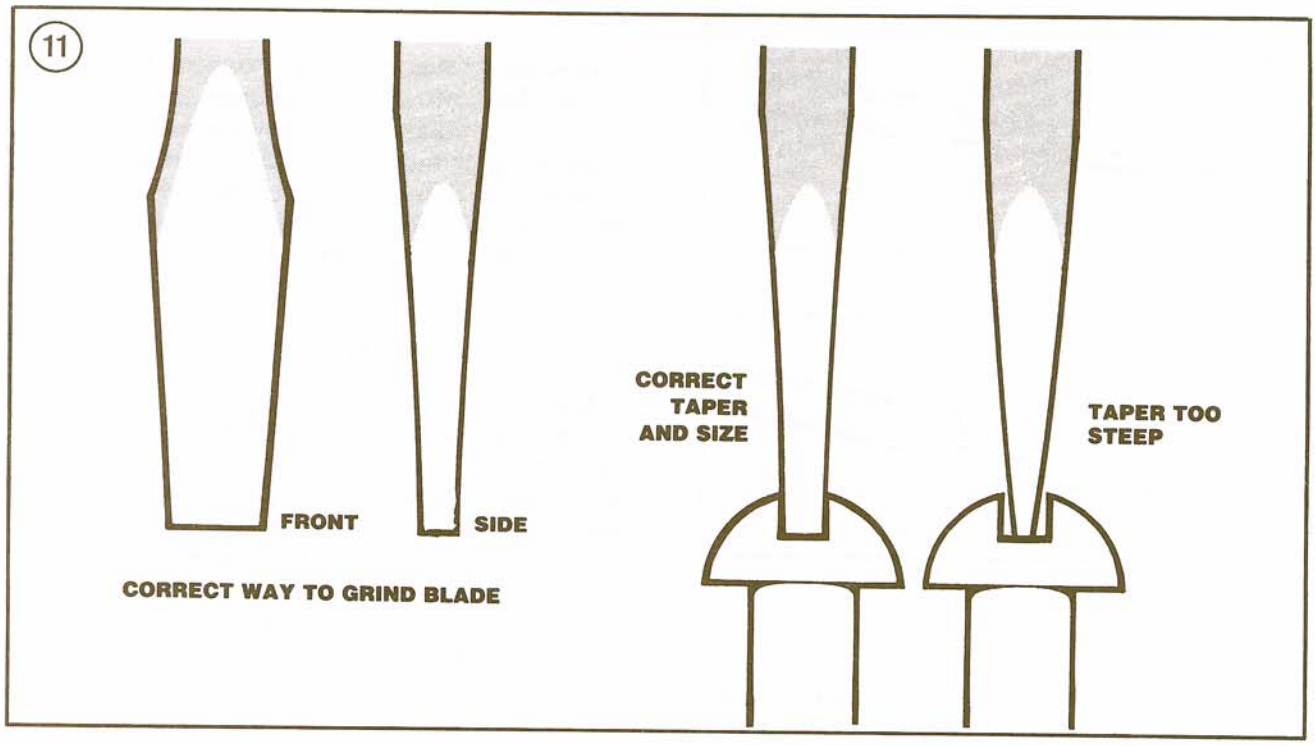

can damage the head so that the proper tool will be unable to remove it.

Keep screwdrivers in the proper condition and they will last longer and perform better. Always keep the tip of a common screwdriver in good condition. **Figure 11** shows how to grind the tip to the proper shape if it becomes damaged. Note the symmetrical sides of the tip.

Pliers

Pliers come in a wide range of types and sizes. Pliers are useful for cutting, bending and crimping. They should never be used to cut hardened objects or to turn bolts or nuts. **Figure 12** shows several types of pliers.

Each type of pliers has a specialized function. Gas pliers are general purpose pliers and are used mainly for holding things and for bending. Vise Grips are used as pliers or to hold objects very tight like a vise. Needlenose pliers are used to hold or bend small objects. Channel lock pliers can be adjusted to hold various sizes of objects; the jaws remain parallel to grip around objects such as pipe or tubing. Snap ring pliers (**Figure 13**) have special tips to expand or contract the snap ring. There are many more types of pliers. The ones described here are the most commonly used.

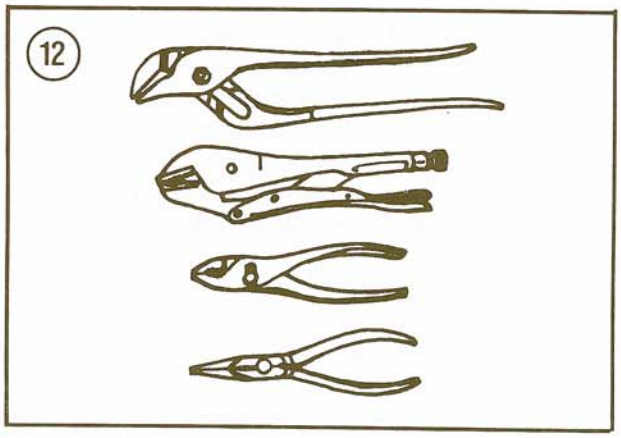

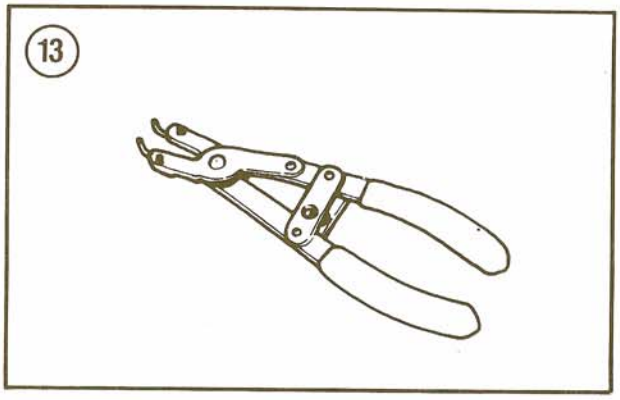

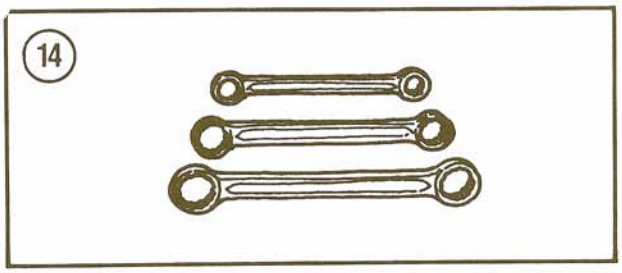

14

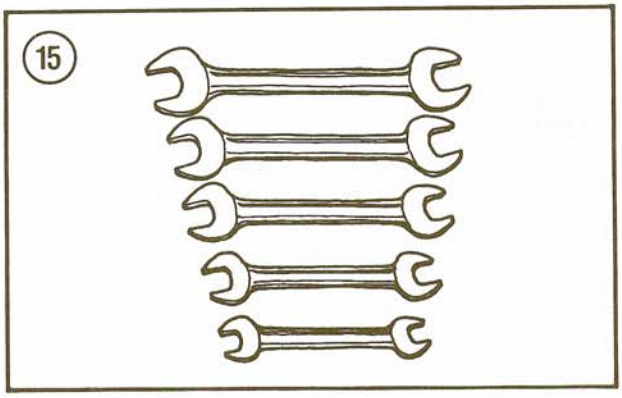

15

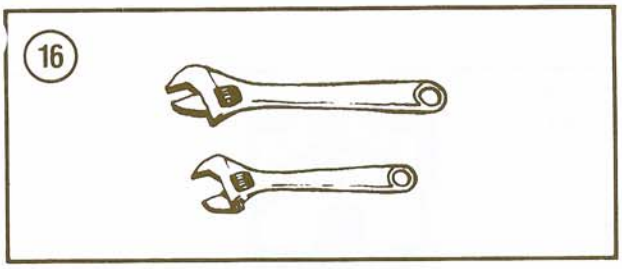

16

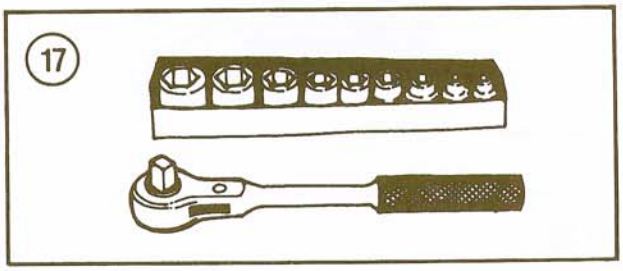

17

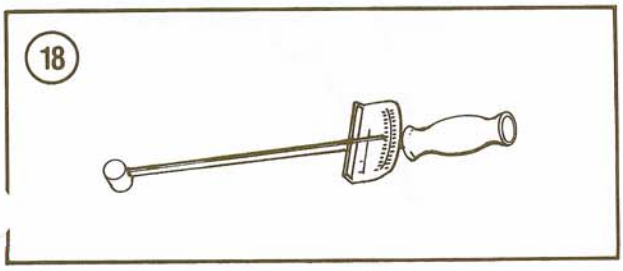

18

Box and Open-end Wrenches

Box and open-end wrenches are available in sets or separately in a variety of sizes. The number stamped near the end refers to the distance between 2 parallel flats on the hex head bolt or nut.

Box wrenches (**Figure 14**) are usually superior to open-end wrenches (**Figure 15**). An open-end wrench grips the nut on only 2 flats. Unless it fits well, it may slip and round off the points on the nut. The box wrench grips all 6 flats. Both 6-point and 12-point openings on box wrenches are available. The 6-point gives superior holding power; the 12-point allows a shorter swing.

Combination wrenches which are open on one side and boxed on the other are also available. Both ends are the same size.

Adjustable (Crescent) Wrenches

An adjustable wrench (also called a crescent wrench) can be adjusted to fit a variety of nuts or bolt heads (**Figure 16**). However, it can loosen and slip, causing damage to the nut and injury to your knuckles. Use an adjustable wrench only when other wrenches are not available.

Adjustable wrenches come in sizes ranging from 4-18 in. overall. A 6 or 8 in. wrench is recommended as an all-purpose wrench.

Socket Wrenches

This type is undoubtedly the fastest, safest and most convenient to use. Sockets which attach to a ratchet handle (**Figure 17**) are available with 6-point or 12-point openings and 1/4, 3/8, 1/2 and 3/4 inch drives. The drive size indicates the size of the square hole which mates with the ratchet handle.

Torque Wrench

A torque wrench (**Figure 18**) is used with a socket to measure how tight a nut or bolt is installed. They come in a wide price range and with either 3/8 or 1/2 in. square drive. The drive size indicates the size of the square drive which mates with the socket. Purchase one that measures 0-140 N•m (0-100 ft.-lb.).

Impact Driver

This tool makes removal of tight fasteners easy and eliminates damage to bolts and screw slots.

Impact drivers and interchangeable bits (**Figure 19**) are available at most large hardware and auto parts stores.

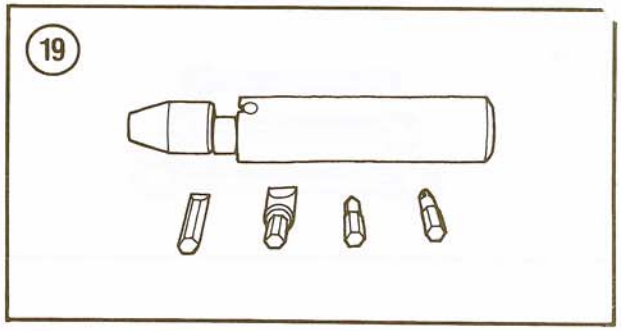

Hammers

The correct hammer is necessary for repairs. Use only a hammer with a face or head or rubber or plastic or the soft-faced type that is filled with buckshot. *Never* use a metal-faced hammer as severe damage will result in most cases. You can always produce the same amount of force with a soft-faced hammer.

Feeler Gauge

This tool has either flat or wire measuring gauges. See **Figure 20**. Wire gauges are used to measure spark plug gap; flat gauges are used for all other measurements. A non-magnetic (brass or plastic) gauge may be specified when working around magnetized parts.

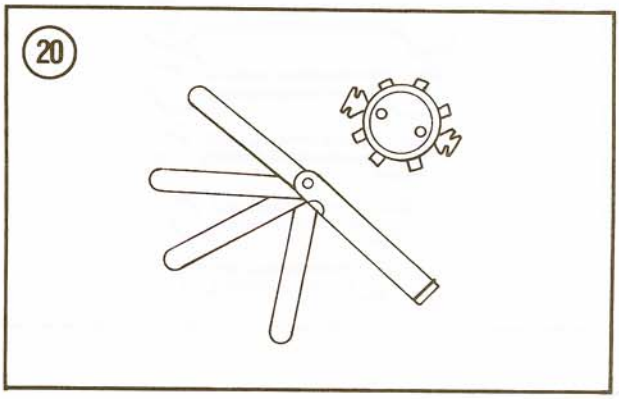

TEST EQUIPMENT

Voltmeter, Ammeter and Ohmmeter

A good voltmeter is required for testing ignition and other electrical systems. Voltmeters are available with analog meter scales or digital readouts. The digital readout voltmeter is recommended for troubleshooting Ford SSI and Dura Spark II ignition systems. An instrument covering 0-20 volts is satisfactory. It should also have a 0-2 volt scale for testing relays, points or individual contacts where voltage drops are much smaller. Accuracy should be ±1/2 volt.

An ohmmeter measures electrical resistance. This instrument is useful in checking continuity (for open and short circuits) and testing fuses and lights. A self-powered 12-volt test light can often be used in its place.

The ammeter measures electrical current. Ammeters for automotive use should have scales covering 0-50 amperes and 0-250 amperes. These are useful for checking battery starting and charging currents.

Some manufacturers combine the 3 instruments into 1 unit called a multimeter or VOM. See **Figure 21**.

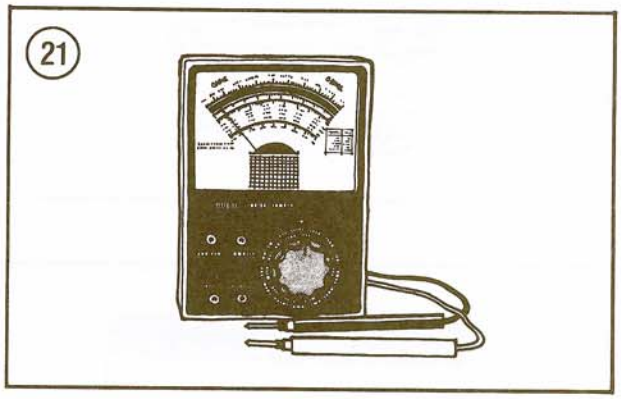

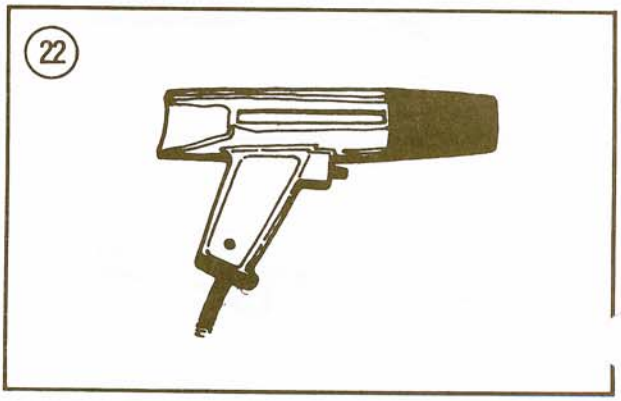

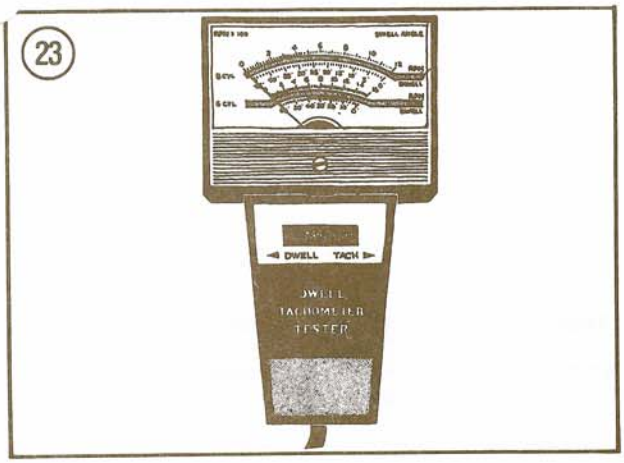

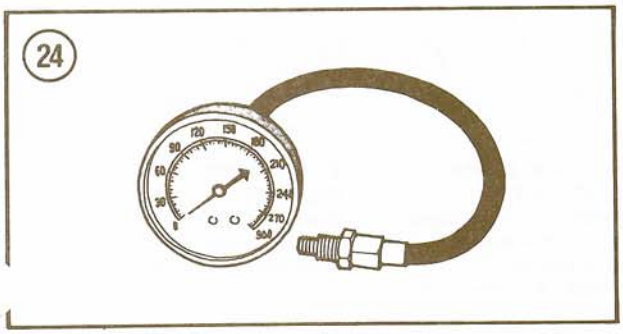

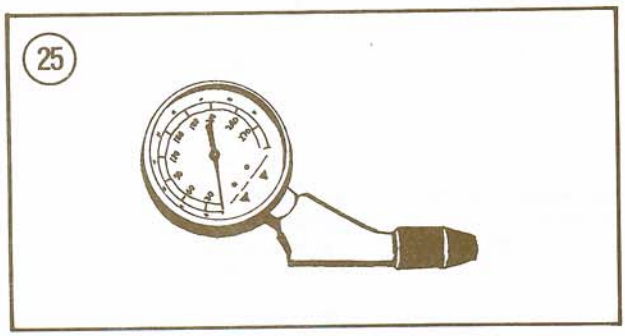

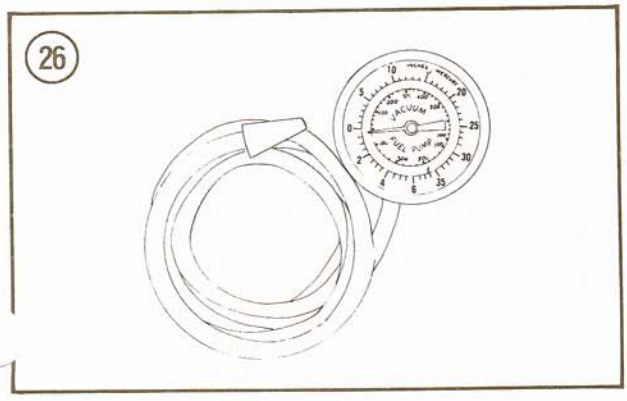

Strobe Timing Light

This instrument is necessary for checking ignition timing. By flashing a light at the precise instant the spark plug fires, the position of the timing mark can be seen. The flashing light makes a moving mark appear to stand still opposite a stationary mark.

Suitable lights range from inexpensive neon bulb types to powerful xenon strobe lights. See **Figure 22**. A light with an inductive pickup is recommended to eliminate any possible damage to ignition wiring.

Tachometer/Dwell Meter

Dwell meters are often combined with a tachometer (**Figure 23**), another piece of necessary test equipment. The dwell meter is not necessary for engines equipped with breakerless ignition. Dwell is determined by a solid state ignition module and cannot be changed.

The tachometer is useful when setting ignition timing and adjusting the carburetor, both of which must be performed at a specified idle speed. The best instrument for this purpose is one with a low range of 0-1,000 or 0-2,000 rpm and a high range of 0-4,000 rpm. Extended range (0-6,000 or 0-8,000 rpm) instruments lack accuracy at lower speeds. The instrument used should be capable of detecting changes of 25 rpm on the low range.

Compression Gauge

This tool measures the amount of pressure present in the engine's combustion chamber during the compression stroke. This indicates general engine condition. Compression readings can be interpreted along with vacuum gauge readings to pinpoint specific engine mechanical problems.

The easiest type to use has screw-in adaptors that fit into the spark plug holes (**Figure 24**). Press-in rubber-tipped types (**Figure 25**) are also available.

Vacuum Gauge

The vacuum gauge (**Figure 26**) measures the intake manifold vacuum created by the engine's intake stroke. Manifold and valve problems can be identified by interpreting the readings; when

(27)



1. NORMAL READING
Reads 15 in. at idle.



2. LATE IGNITION TIMING
About 2 inches too low at idle.



3. LATE VALVE TIMING
About 4 to 8 inches low at idle.



4. INTAKE LEAK
Low steady reading.



5. NORMAL READING
Drops to 2, then rises to 25 when accelerator is rapidly depressed and released.



6. WORN RINGS, DILUTED OIL
Drops to 0, then rises to 18 when accelerator is rapidly depressed and released.

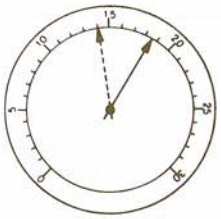

7. STICKING VALVE(S)
Normally steady. Intermittently flicks downward about 4 in.



8. LEAKY VALVE
Regular drop about 2 inches.

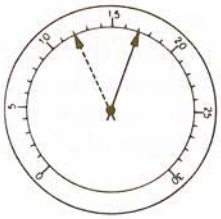

9. BURNED OR WARPED VALVE
Regular, evenly spaced down-scale flick about 4 in.



10. WORN VALVE GUIDES
Oscillates about 4 in.

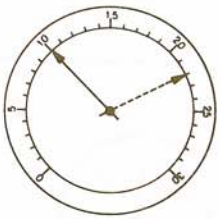

11. WEAK VALVE SPRINGS
Violent oscillation (about 10 in.) as rpm increases. Often steady at idle.



12. IMPROPER IDLE MIXTURE
Floats slowly between 13-17 in.



13. SMALL SPARK GAP or DEFECTIVE POINTS
Slight float between 14-16 in.

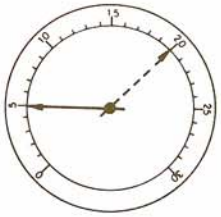

14. HEAD GASKET LEAK
Gauge floats between 5-19 in.



15. RESTRICTED EXHAUST SYSTEM
Normal when first started. Drops to 0 as rpm increases. May eventually rise to about 16.

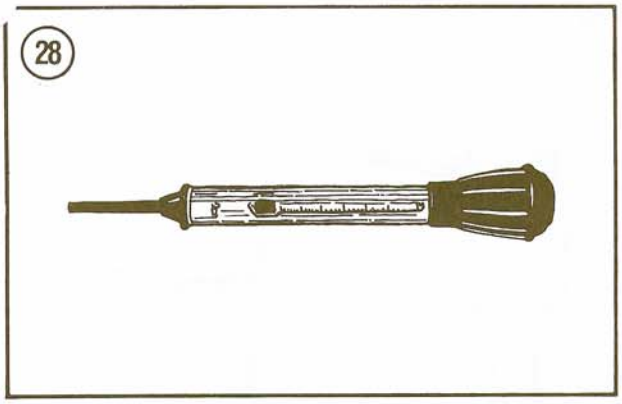

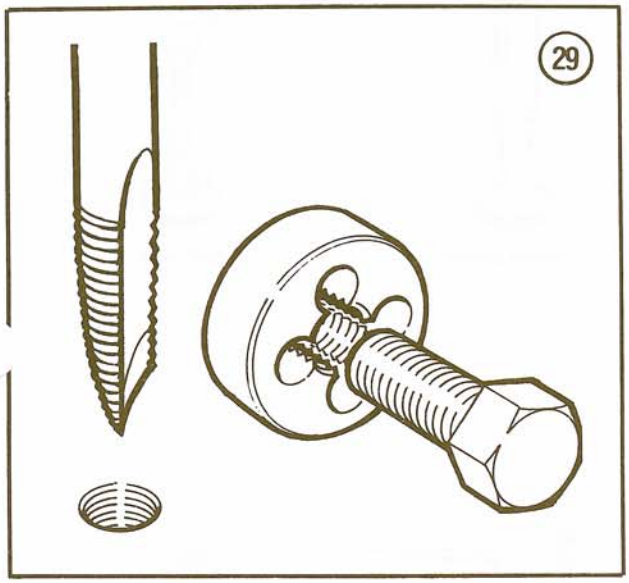

combined with compression gauge readings, other engine problems can be diagnosed.

Figure 27 shows a number of typical vacuum gauge readings with interpretations.

Fuel Pressure Gauge

This instrument is needed for evaluating fuel pump performance. Usually, a vacuum gauge and a fuel pressure gauge are combined in one unit.

Hydrometer

Hydrometer testing is the best way to check the condition of unsealed batteries. The most efficient type is a temperature-compensated hydrometer with numbered gradations (**Figure 28**) from 1.100 to 1.300 rather than one with just color-coded bands.

Remote Start Switch

An optional but convenient item of equipment, the remote starter switch connects to the starter relay and permits cranking the engine from outside the car. It eliminates the need for an assistant during certain procedures, such as setting the breaker points and checking compression.

Expendable Supplies

Certain expendable supplies are also required to correctly service your vehicle. These include greases, oil, gasket cement, shop rags, cleaning solvent and distilled water. Special fastener locking compounds and silicone lubricants are available from dealers or auto parts specialists to make maintenance simpler and easier. Solvent is available at auto parts stores and distilled water for the battery is available at most supermarkets.

MECHANIC'S TECNIQUES

Removing Frozen Fasteners

When a fastener rusts and cannot be removed, several methods may be used to loosen it. First, apply penetrating oil such as Liquid Wrench or WD-40 (available at any hardware or auto supply store).Apply it liberally and let it penetrate for 10-15 minutes. Rap the fastener several times with a small hammer; do not hit it hard enough to cause damage. Reapply the penetrating oil if necessary.

For frozen screws, apply penetrating oil as described, then insert a screwdriver in the slot and rap the top of the screwdriver with a hammer. This loosens the rust so the screw can be removed in the normal way. If the screw head is too chewed up to use a screwdriver, grip the head with Vise Grip pliers and twist the screw out.

Avoid applying heat unless specifically instructed, as it may melt, warp or remove the temper from parts.

Remedying Stripped Threads

Occasionally, threads are stripped through carelessness or impact damage. Often the threads can be cleaned up by running a tap (for internal threads on nuts) or die (for external threads on bolts) through or over the threads. See **Figure 29**.

Removing Broken Screws or Bolts

When the head breaks off a screw or bolt, several methods are available for removing the remaining portion.

If a large portion of the remainder projects out, try gripping it with Vise Grips. If the projecting portion is too small, file it to fit a wrench or cut a slot in it to fit a screwdriver. See **Figure 30**.

If the head breaks off flush, use a screw extractor. To do this, centerpunch the remaining portion of the screw or bolt. Drill a small hole in the screw and tap the extractor into the hole. Back the screw out with a wrench on the extractor. See **Figure 31**.

GASKET SEALANT

Gasket sealant is used instead of pre-formed gaskets between various engine, transmission, transfer case and axle mating surfaces. Two types of gasket sealant are used: room temperature vulcanizing (RTV) and anaerobic. Since these 2 materials have different sealing properties, they cannot be used interchangeably.

Room Temperature Vulcanizing (RTV) Sealant

This black silicone gel is supplied in tubes and is available from your Ford dealer as Silicone Rubber Sealant (part No. D6AZ-19562-A or -B). Moisture in the air causes RTV to cure. Always place the cap on the tube as soon as possible when using RTV.

RTV has a shelf life of one year and will not cure properly when the shelf life has expired. Check the expiration date on RTV tubes before using and keep partially used tubes tightly sealed.

Applying RTV Sealant

Clean all RTV residue from mating surfaces. They should be clean and free of oil and dirt.

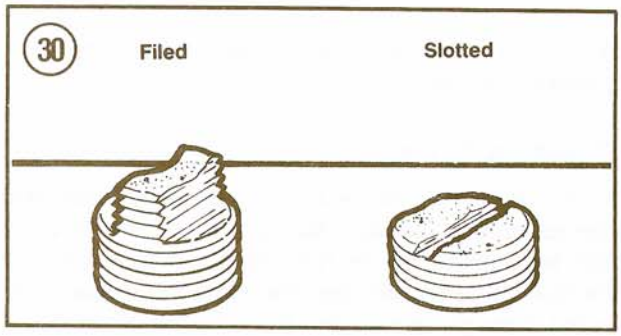

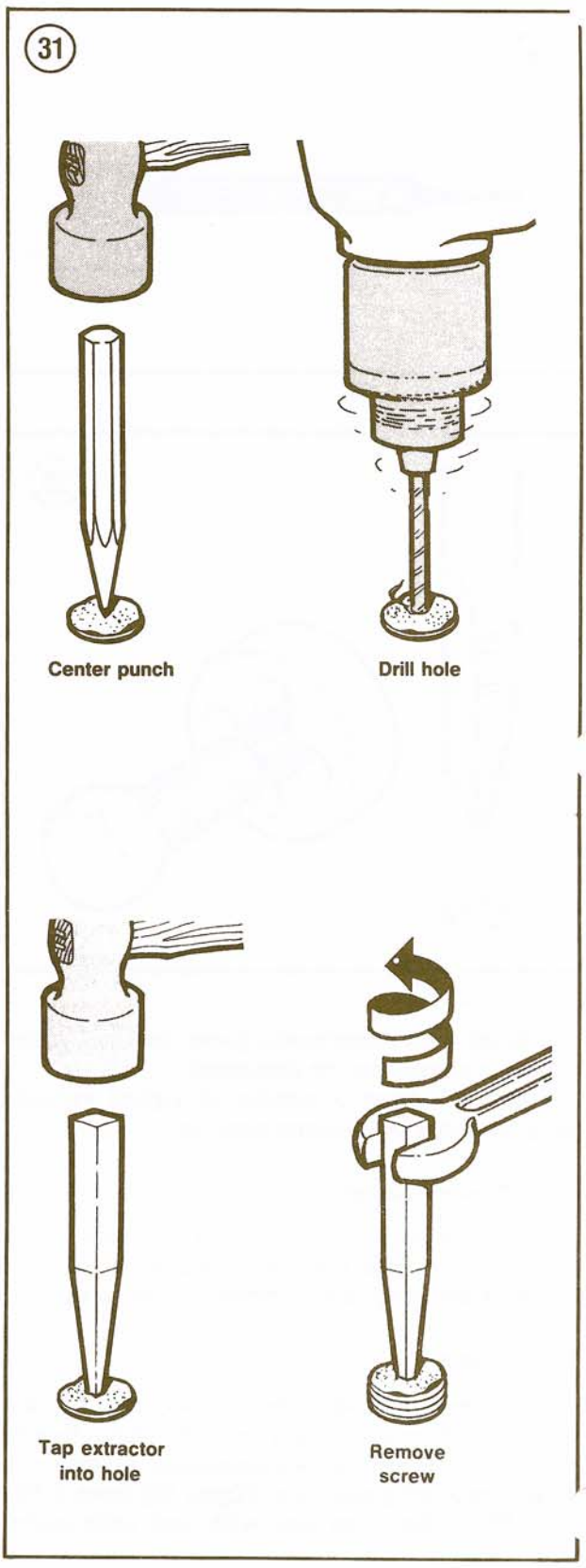

Remove all RTV gasket material from blind attaching holes, as it can cause a hydraulic effect and affect bolt torque.

Unless otherwise specified, apply RTV sealant in a continuous bead 3-5 mm (1/8-3/16 in.) thick. Apply the sealant on the inner side of mounting holes. Torque mating parts within 15 minutes after application.

Anaerobic Sealant

This is a red gel supplied in tubes and is available from your Ford dealer as Gasket Maker (part No. E2AZ-19562-A). It cures only in the absence of air, as when squeezed tightly between 2 machined mating surfaces. For this reason, it will not spoil if the cap is left off the tube. It should not be used if one mating surface is flexible.

Applying Anaerobic Sealant

Clean all gasket residue from mating surfaces. They must be clean and free of oil and dirt. Remove all gasket material from blind attaching holes, as it can cause a hydraulic effect and affect bolt torque.

Unless otherwise specified, apply anaerobic gasket material in a 1 mm or less (0.04 in.) bead to one sealing surface. Apply the sealant on the inner side of all mounting holes. Torque mating parts within 15 minutes after application.

Table 1 DECIMAL AND METRIC EQUIVALENTS

Fractions	Decimal in.	Metric mm	Fractions	Decimal in.	Metric mm
1/64	0.015625	0.39688	33/64	0.515625	13.09687
1/32	0.03125	0.79375	17/32	0.53125	13.49375
3/64	0.046875	1.19062	35/64	0.546875	13.89062
1/16	0.0625	1.58750	9/16	0.5625	14.28750
5/64	0.078125	1.98437	37/64	0.578125	14.68437
3/32	0.09375	2.38125	19/32	0.59375	15.08125
7/64	0.109375	2.77812	39/64	0.609375	15.47812
1/8	0.125	3.1750	5/8	0.625	15.87500
9/64	0.140625	3.57187	41/64	0.640625	16.27187
5/32	0.15625	3.96875	21/32	0.65625	16.66875
11/64	0.171875	4.36562	43/64	0.671875	17.06562
3/16	0.1875	4.76250	11/16	0.6875	17.46250
13/64	0.203125	5.15937	45/64	0.703125	17.85937
7/32	0.21875	5.55625	23/32	0.71875	18.25625
15/64	0.234375	5.95312	47/64	0.734375	18.65312
1/4	0.250	6.35000	3/4	0.750	19.05000
17/64	0.265625	6.74687	49/64	0.765625	19.44687
9/32	0.28125	7.14375	25/32	0.78125	19.84375
19/64	0.296875	7.54062	51/64	0.796875	20.24062
5/16	0.3125	7.93750	13/16	0.8125	20.63750
21/64	0.328125	8.33437	53/64	0.828125	21.03437
11/32	0.34375	8.73125	27/32	0.84375	21.43125
23/64	0.359375	9.12812	55/64	0.859375	21.82812
3/8	0.375	9.52500	7/8	0.875	22.22500
25/64	0.390625	9.92187	57/64	0.890625	22.62187
13/32	0.40625	10.31875	29/32	0.90625	23.01875
27/64	0.421875	10.71562	59/64	0.921875	23.41562
7/16	0.4375	11.11250	15/16	0.9375	23.81250
29/64	0.453125	11.50937	61/64	0.953125	24.20937
15/32	0.46875	11.90625	31/32	0.96875	24.60625
31/64	0.484375	12.30312	63/64	0.984375	25.00312
1/2	0.500	12.70000	1	1.00	25.40000

CHAPTER TWO

TROUBLESHOOTING

Every automotive engine requires an uninterrupted supply of fuel and air, proper ignition and adequate compression. If any of these are lacking, the engine will not run.

Troubleshooting is a relatively simple matter when it is done logically. The first step in any troubleshooting procedure is to define the symptoms as fully as possible and then localize the problem. Subsequent steps involve testing and analyzing those areas which could cause the symptoms. A haphazard approach may eventually solve the problem, but it can be very costly in terms of wasted time and unnecessary parts replacement.

There are two axioms to remember about troubleshooting:

a. The source of the problem is seldom where you think it is.
b. When all else fails, go back to basics—simple solutions often solve complex-appearing problems.

Never assume anything. Don't overlook the obvious. If the engine suddenly quits when running or refuses to start, check the easiest and most accessible spots first. Make sure there is fuel in the tank, the spark plugs or glow plugs are properly connected and all wiring harnesses are properly connected. Something as simple as a loose termina connection on the ignition coil can allow the primary wire to come off while driving, especially if the vehicle has been subjected to harsh or off-road driving. It is costly and embarrassing to call a tow truck in such a case.

You should be familiar enough with the engine compartment to know which wires go where. If a quick visual check of the obvious does not turn up the cause of the problem, look a little further. Learning to recognize and describe symptoms accurately will make repairs easier for you or a mechanic at the shop. Saying that "it won't run" isn't the same as saying "it quit at high speed and wouldn't start."

Gather as many symptoms together as possible to aid in diagnosis. Note whether the engine lost power gradually or all at once, what color smoke (if any) came from the exhaust and so on. Remember, the more complicated engine systems become, the easier it is to troubleshoot them because symptoms point to specific problems.

After the symptoms are defined, test and analyze those areas which could cause the problem(s). You don't need fancy or complicated test equipment to determine whether repairs can be attempted home.

The electrical system is the weakest link in the chain. More problems result from electrical malfunctions than from any other source. Keep this in mind before you blame the fuel system and start making unnecessary adjustments. A few simple checks can keep a small problem from turning into a large one. They can also save a large repair bill and time lost while the vehicle sits in a shop's service department.

On the other hand, be realistic and don't attempt repairs beyond your abilities or with makeshift tools. Stripping the threads on a carburetor inlet while trying to change the fuel filter will cost you several hundred dollars for a new carburetor. Service departments also tend to charge heavily for putting together a disassembled engine or other component that may have been abused. Some won't even take on such a job—so use common sense and don't get in over your head or attempt a job without the proper tools.

Due to increasingly strict emission requirements, most vehicles covered in this manual are equipped with electronic engine control systems. A microprocessor determines idle speed, air-fuel ratio, EGR flow and many other aspects of engine operation. Amateur mechanics should not attempt to diagnose and service such systems. They require the use of special diagnostic testers and specialized training. System calibration differs according to engine, model year and geographical location in which the vehicle is sold. If you can localize the symptoms sufficiently to indicate that the electronic engine control system is at fault, leave the servicing of the system to your dealer.

Proper lubrication, maintenance and periodic tune-ups as described in Chapter Three will reduce the necessity for troubleshooting. Even with the best of care, however, an automotive engine is prone to problems which will eventually require troubleshooting.

This chapter contains brief descriptions of each operating system and troubleshooting procedures to be used. The troubleshooting procedures analyze common symptoms and provide logical methods of isolation. These are not the only methods. There may be several approaches to a problem, but all methods used must have one thing in common to be successful—a logical, systematic approach.

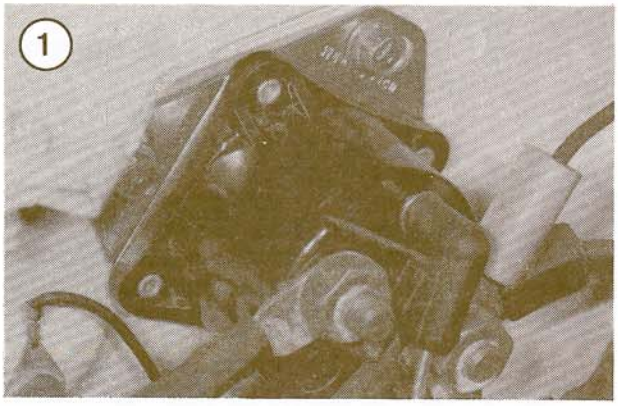

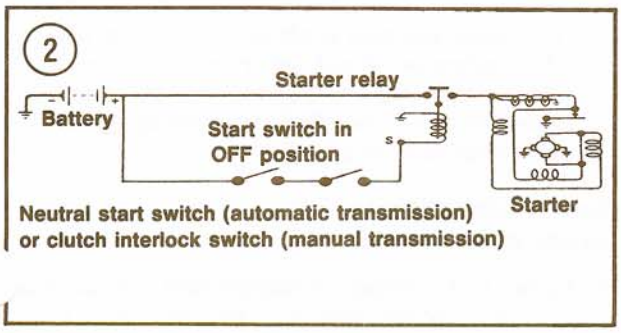

STARTING SYSTEM

The starting system consists of the battery, starter motor, starter relay, solenoid (on diesel models), ignition switch, neutral start switch (automatic transmission) and connecting wiring. A clutch interlock switch is used with 1985-on vehicles equipped with a manual transmission. The interlock switch requires that the clutch pedal be fully depressed before the starting circuit will operate.

A Motorcraft positive engagement starter is used on all gasoline models. Diesel models use a gear reduction starter with attached solenoid.

When the ignition switch is turned to START with the transmission in PARK or NEUTRAL (automatic) or the clutch pedal fully depressed (1985-on manual), it transmits current from the battery to the starter relay (**Figure 1**).

a. With positive engagement starters, the relay sends the battery current to the starter motor where it flows through a grounded pole coil attached to the starter drive plunger lever and forces the drive into engagement with the flywheel. **Figure 2** is a schematic of the positive engagement starter system.
b. With gear reduction starters, the relay sends the battery current to the starter solenoid, which mechanically engages the starter with

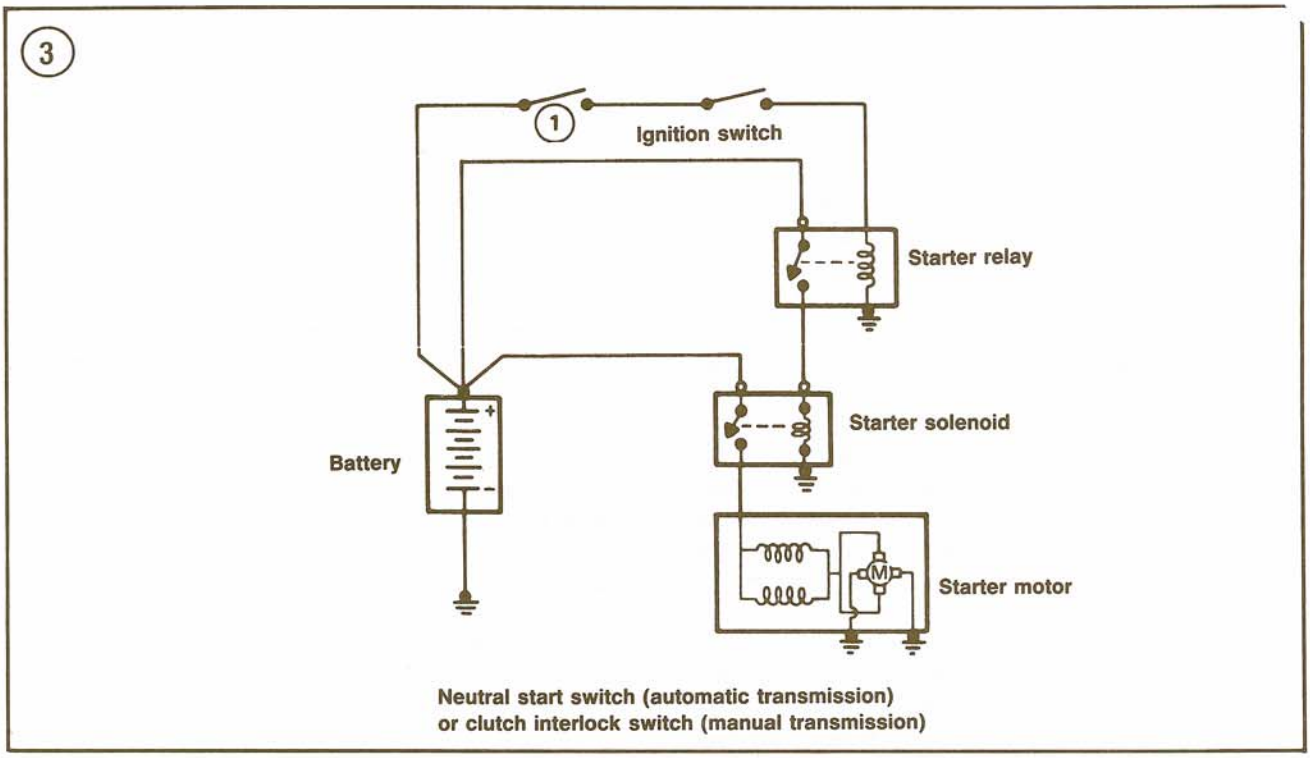

the engine flywheel. **Figure 3** is a schematic of the gear reduction starter system.

Starting system problems are relatively easy to find. In most cases, the trouble is a loose or dirty electrical connection.

On-vehicle Testing

Three of these procedures require a fully charged 12-volt battery (to be used as a booster) and a pair of jumper cables. Use the jumper cables as outlined in *Jump Starting*, Chapter Eight, following all of the precautions noted. Disconnect the Thermactor bypass valve vacuum line on gasoline engines so equipped before starting this procedure. When testing has been completed, let the engine idle for 3-4 minutes before reconnecting the vacuum line.

Slow cranking starter

1. Connect the jumper cables. Listen to the starter cranking speed as the engine is started. If the cranking speed sounds normal, check the battery for loose or corroded connections or a low charge. Clean and tighten the connections as required. Recharge the battery if necessary.
2. If cranking speed does not sound normal, clean and tighten all starter relay connections and the battery ground on the frame and/or engine.
3. Repeat Step 1. If the cranking speed is still too slow, replace the starter.

CLYMER QUICK TIP

You use SAE 20W-50 whenever you change the engine oil. After a trip of several hours duration on the freeway in hot weather, you pull into a service station for gas. When you're ready to leave, the starter will hardly turn the engine over. It sounds like trying to start an engine with a run-down battery.

Don't buy a new battery on the spot, even if the price is right. The chances are good that your hot, thin oil has run off the cylinder walls, leaving them dry and unlubricated. Remove the air cleaner and pour a cup of SAE 10W oil into the carburetor throat while another person cranks the engine. If the cranking speed increases shortly and the engine fires up, get an oil change as soon as possible.

Starter relay clicks, starter does not crank

1. Clean and tighten all starter and starter rela connections. Make sure the terminal eyelets are

securely fastened to the wire strands and are not corroded.
2. Remove the battery terminal clamps. Clean the clamps and battery posts. Reinstall the clamps and tighten securely.
3. If the starter does not crank, connect the jumper cables. If the starter still does not crank, replace it.

Starter relay chatters (no click), starter does not crank

1. Check the red/blue wire connection at the starter relay. Clean and tighten if necessary.
2. Check the relay mounting screws for a good, tight ground.
3. Place the transmission in PARK (automatic) or NEUTRAL (manual).
4. Disconnect the red/blue wire at the starter relay. Connect a jumper wire between this relay connector and the positive battery terminal.
5. Connect the jumper cables. Try starting the engine (depress the clutch on manual transmission vehicles with a clutch interlock switch).
6. If the engine starts, check the ignition switch, neutral start or clutch interlock switch and system wiring for an open circuit or a loose connection. If the engine does not start, replace the starter relay.

Starter spins but does not crank

1. Remove the starter. See Chapter Eight.
2. Check the starter pinion gear. If the teeth are chipped or worn, inspect the flywheel ring gear for the same problem. Replace the starter and/or ring gear as required.
3. If the pinion gear is in good condition, disassemble the starter and check the armature shaft for corrosion. See *Brush Replacement*, Chapter Eight for disassembly procedure.
4. If there is no corrosion, the starter drive assembly is slipping. Replace the starter with a new or rebuilt unit.

Starter will not disengage when ignition switch is released

This problem is usually caused by a sticking solenoid but the pinion may jam on the flywheel ring gear of high-mileage vehicles. If equipped with a manual transmission, the pinion can often be temporarily freed by rocking the vehicle in high gear.

Loud grinding noises when starter runs

This can be caused by improper meshing of the starter pinion and flywheel ring gear or by a broken overrunning clutch mechanism.
1. Remove the starter. See Chapter Eight.
2. Check the starter pinion gear. If the teeth are chipped or worn, inspect the flywheel ring gear for the same problem. Replace the starter and/or ring gear as required.
3. Overrunning clutch starter—If the pinion gear is in good condition, disassemble the starter and check the overrunning clutch mechanism. See *Brush Replacement*, Chapter Eight for disassembly procedure.

CLYMER QUICK TIP

Your engine starts fine under cold-start conditions and restarts easily when used for short distance driving. After a drive of several miles duration, however, the starter will not crank and restart the hot engine. After the engine cools for 1-3 hours (depending upon ambient temperature), the starter works normally. An open-circuit test and hydrometer check of the battery indicates that it is in satisfactory condition.

Disregard helpful hints about resetting the ignition timing or mechanics who tell you that this is typical of Fords. Check the cold cranking amperage rating of the battery installed in the vehicle and compare it to specifications. If a replacement battery has been installed, the odds are high that while the battery has sufficient power for a cold start, it is insufficient to cope with the high internal resistance in the starter and reduced engine operating tolerances which result from engine operation, especially in extremely warm weather.

Many drivers buy a replacement battery according to the length of the guarantee and their pocketbook. While a 12-month battery seems satisfactory (and the price is right), it does not have the power and stamina to handle the starting requirements of your engine.

CHARGING SYSTEM (GENERAL)

A drive belt driven by the engine crankshaft pulley turns the alternator, which produces electrical energy to charge the battery. As engine speed varies, the voltage output of the alternator varies. The regulator maintains the voltage to the

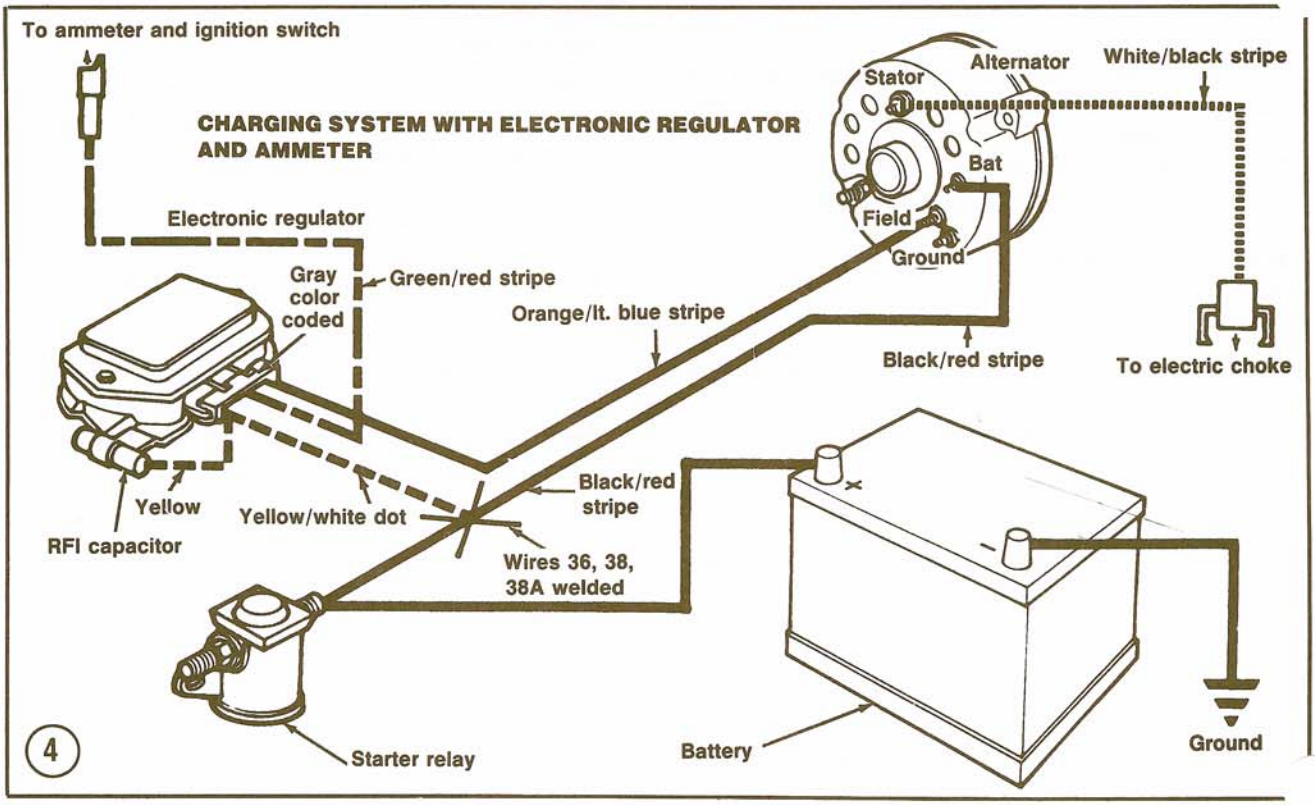
To ammeter and ignition switch
CHARGING SYSTEM WITH ELECTRONIC REGULATOR AND AMMETER
Stator
Alternator
White/black stripe
Bat
Field
Ground
Electronic regulator
Gray color coded
Green/red stripe
Orange/lt. blue stripe
Black/red stripe
To electric choke
Yellow
RFI capacitor
Yellow/white dot
Black/red stripe
Wires 36, 38, 38A welded
Starter relay
Battery
Ground
4

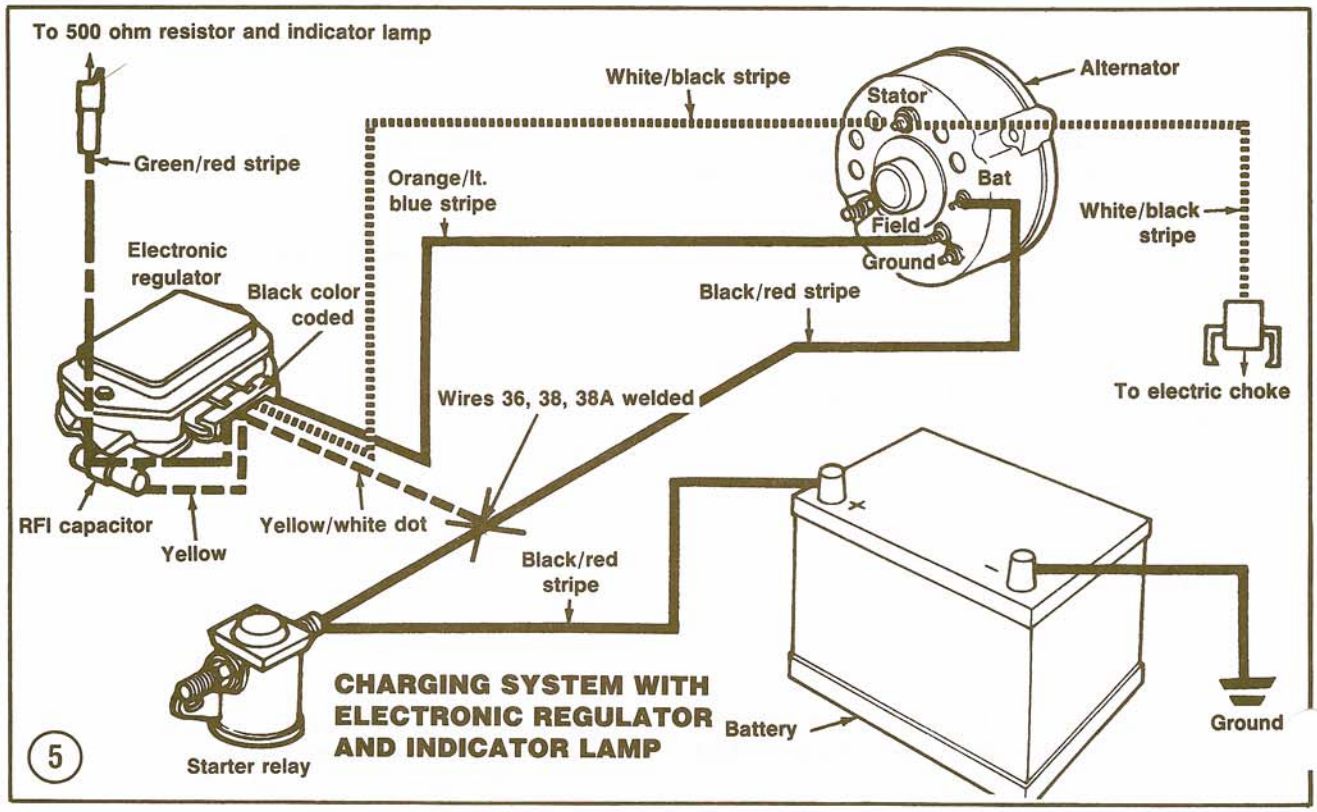
To 500 ohm resistor and indicator lamp
White/black stripe
Alternator
Stator
Green/red stripe
Orange/lt. blue stripe
Bat
White/black stripe
Field
Ground
Electronic regulator
Black color coded
Black/red stripe
To electric choke
Wires 36, 38, 38A welded
RFI capacitor
Yellow
Yellow/white dot
Black/red stripe
CHARGING SYSTEM WITH ELECTRONIC REGULATOR AND INDICATOR LAMP
Battery
Ground
Starter relay
5

electrical system within safe limits. The ammeter or charge indicator light signals when charging is not taking place. Typical charging circuits with ammeter and charge indicator light are shown in **Figure 4** and **Figure 5**.

Complete troubleshooting of the charging system requires test equipment and skills which the average home mechanic does not possess. However, there are a few basic tests which can be done to pinpoint most problems.

Charging system troubles are generally caused by a defective alternator, voltage regulator, battery or a blown fuse. They may also be caused by something as simple as incorrect drive belt tension.

The following are symptoms of problems you may encounter.

1. *Battery dies frequently, even though the ammeter or warning light indicates no discharge*—This can be caused by a drive belt that is slightly loose. With the engine OFF, grasp the alternator pulley with both hands and try to turn it. If the pulley can be turned without moving the belt, the drive belt is too loose. As a rule, keep the belt tight enough so that it can be deflected only about 1/2 in. under moderate thumb pressure applied between the pulleys. The battery may also be at fault; test the battery condition as described in Chapter Eight.
2. *Ammeter needle does not move when ignition switch is turned ON*—This may indicate a defective ignition switch, battery, voltage regulator or ammeter. Try to start the engine. If it doesn't start, check the ignition switch and battery. If the engine starts, remove and test the ammeter. If the ammeter is good, locate the voltage regulator and make sure it is properly grounded (try tightening the mounting screws). See **Figure 6** (typical). If the problem persists, the alternator brushes may not be making contact. Perform the *Charging System Test* in this chapter.
3. *Ammeter needle fluctuates between "Charge" and "Discharge"*—This usually indicates that the charging system is working intermittently. Check drive belt tension first, then check all electrical connections in the charging circuit. As a last resort, check the alternator.
4. *Battery requires frequent addition of water or lamps require frequent replacement*—The alternator is probably overcharging the battery. Perform the *Over-voltage Test* in this chapter.
5. *Excessive noise from the alternator*—Check for loose mounting brackets and bolts. The problem may also be worn bearings or (in some cases) lack of lubrication. If an alternator whines, a shorted diode may be the problem.

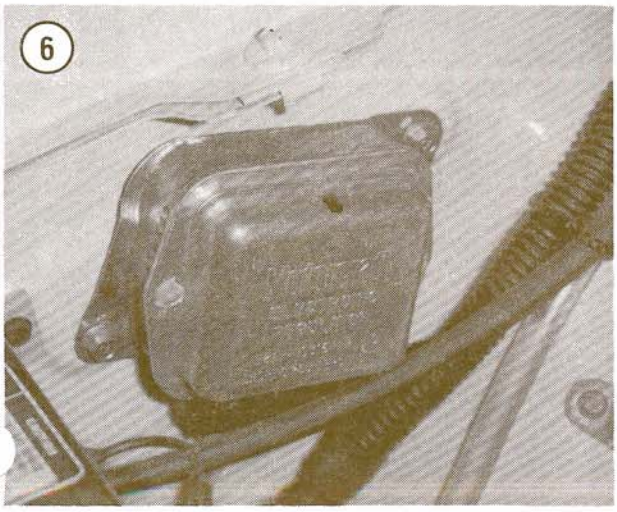

EVR CHARGING SYSTEM

The EVR (external voltage regulator) charging system consists of the battery, alternator, voltage regulator, charge indicator light (or ammeter), fuse link and connecting wiring.

Charging System Test

A voltmeter with a 0-20 volt scale, an ohmmeter, a jumper wire, 2 blade terminals and an engine tachometer are required for an accurate charging system test.

1. Check alternator belt tension. See *Drive Belts*, Chapter Three.
2. Check the fusible link located between the alternator and starter relay. See *Fusible Links*, Chapter Eight.
3. Check the battery terminals and cables for corrosion or loose connections. Clean and tighten as necessary.
4. Check all wiring connections between the alternator, regulator and engine to make sure they are clean and tight.
5. Carburetted engine—Disconnect the electric choke lead at the alternator stator terminal. Check the lead for a ground condition. Do not reconnect until charging system testing has been completed.

6. Connect the positive voltmeter lead to the positive battery cable clamp. Connect the negative voltmeter lead to the negative battery cable clamp. See **Figure 7**. Make sure the ignition and all accessories are off.
7. Write down the voltage displayed on the voltmeter scale. This is the battery or base voltage.
8. Connect a tachometer to the engine according to manufacturer's instructions.
9. Start the engine and bring its speed up to about 1,500 rpm. The voltmeter reading should increase from that recorded in Step 7, but not by more than 2 volts.
10. If the voltage increase is within specifications in Step 9, perform the *Load Test*. If the increase is greater than 2 volts, perform the *Over-voltage Test*. If the voltage does not increase, perform the *Under-voltage Test*.

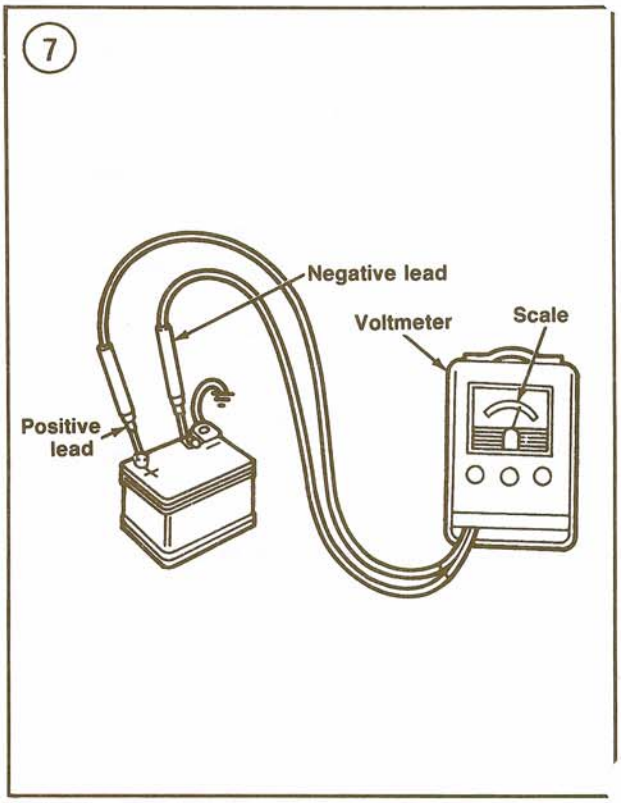

Load Test

1. With the engine running, turn the headlights on high beam and the heater or air conditioner blower on HIGH speed.
2. Increase the engine speed to about 2,000 rpm. The voltmeter should show an increase of 0.5-2.0 volts above base voltage. If it does not, perform the *Under-voltage Test*. If it shows more than a 2 volt increase, perform the *Over-voltage Test*.

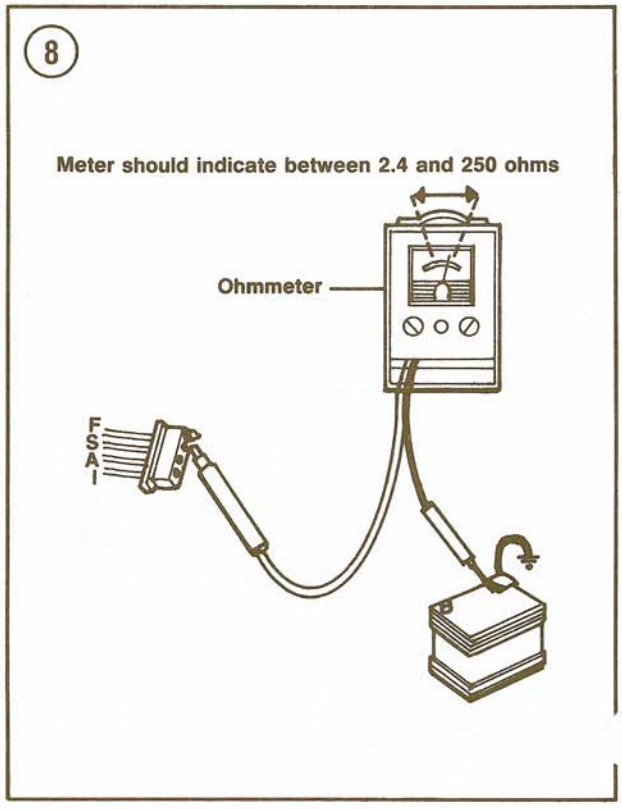

Over-voltage Test

1. Connect a jumper wire between the voltage regulator base and the alternator frame.
2. With the engine running, bring its speed up to about 1,500 rpm. If the voltage increase is less than 2 volts, check, clean and tighten the alternator, regulator, engine, battery and instrument panel ground connections.
3. If the voltage increase still exceeds 2 volts, stop the engine and disconnect the voltage regulator wiring plug at the regulator.
4. Start the engine and bring its speed up to about 1,500 rpm. If the voltage increase is less than 2 volts, replace the regulator.
5. If the voltage increase continues to exceed 2 volts with the regulator disconnected, there is a short between circuits A and F in the wiring harness. Locate and correct the short or replace the harness.

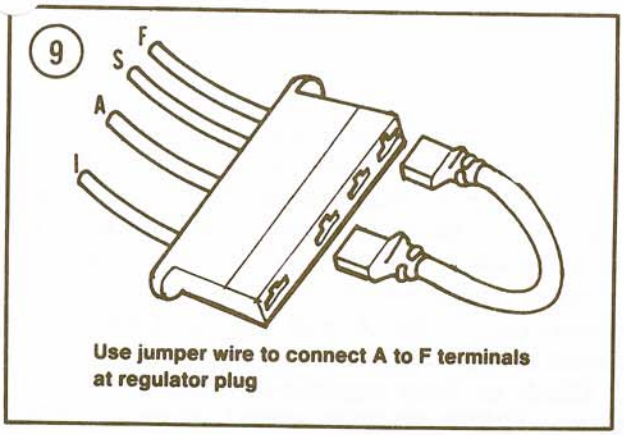

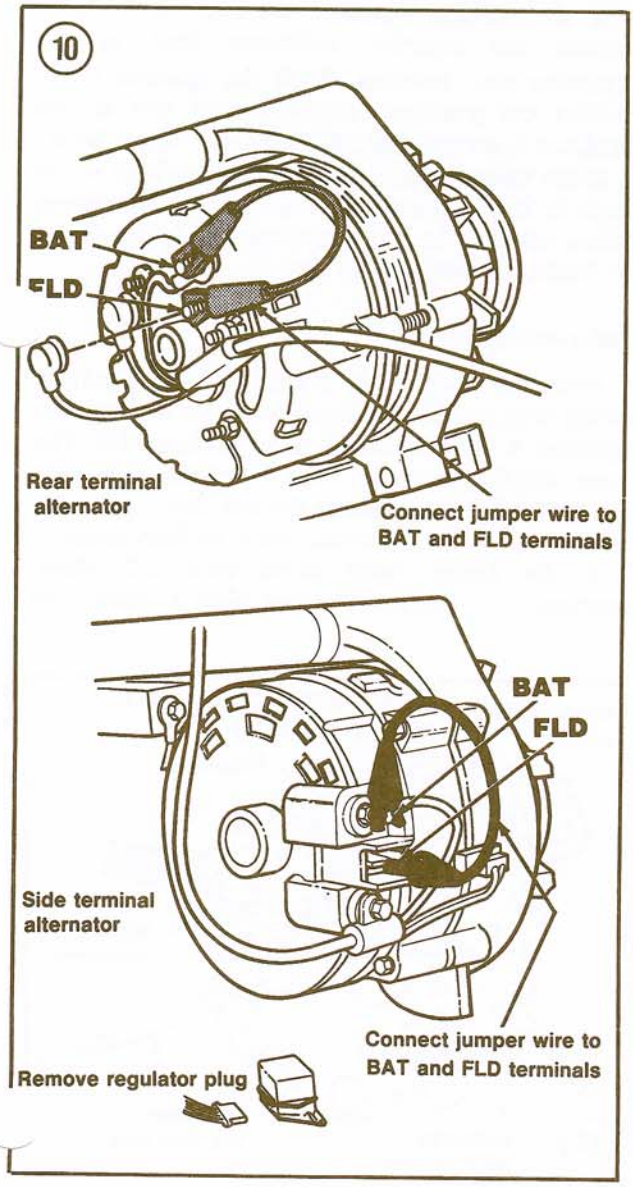

Under-voltage Test

CAUTION
Grounding the field or F circuit during this test will damage the regulator.

1. With the engine off, disconnect the regulator wiring plug and insert a blade terminal in the F socket of the plug.
2. Connect an ohmmeter as shown in **Figure 8**. The meter scale should read between 2.4 and 250 ohms. If it reads less than 2.4 ohms, there is a grounded field circuit in the wire harness or alternator.
3. If the meter reads more than 2.4 ohms, connect a jumper wire between the A and F terminals of the regulator plugs, as shown in **Figure 9**.
4. Connect a tachometer and voltmeter. Start the engine, turn the heater or air conditioner blower on high speed and the headlights on high beam.
5. Increase engine speed to about 2,000 rpm. The voltmeter should read at least 0.5 volt above the base voltage written down in Step 7 of the *Charging System Test*. If it does, replace the regulator.
6. If the voltmeter does not read more than 0.5 volt above the base voltage, turn the engine off. Remove the jumper wire from the regulator plug. Leave the plug disconnected.
7. Disconnect the field wire at the FLD terminal on the alternator. Remove the protective cover from the BAT terminal. Connect the jumper wire between the terminals as shown in **Figure 10**.
8. Repeat Step 4 and Step 5. If the voltmeter now reads at least 0.5 volt above base voltage, go to the *S and I Circuit Test* in this chapter.
9. If under-voltage is still shown, shut the engine off. Switch the positive voltmeter lead to the alternator BAT terminal (negative lead is still on ground).
10. If the voltmeter reads base voltage, replace the alternator with a new or rebuilt unit. A zero voltmeter reading indicates a problem in the alternator-to-starter relay wiring (or fusible link).

S and I Circuit Test
(Vehicle With Indicator Light)

1. With the engine off, disconnect the regulator wiring plug and connect a jumper wire between the A and F terminals, as shown in **Figure 9**. Install a blade terminal in the S and I sockets of the plug.

2. Start the engine. Connect the negative voltmeter lead to the negative battery cable and the positive voltmeter lead to the S terminal of the plug. Note the voltmeter reading.
3. Switch the positive voltmeter lead to the I terminal of the plug. Note and compare this reading with the S terminal reading in Step 2. If the S circuit voltage reads approximately 1/2 of that shown at the I terminal, replace the regulator.
4. If the voltmeter reads zero voltage in Step 3, there is a problem in the wiring circuit between the ignition switch and the regulator wiring plug.

S and I Circuit Test (Vehicle With Ammeter)

1. With the engine off, disconnect the regulator wiring plug. Install a blade terminal in the S socket of the plug.
2. Connect the positive voltmeter lead to the S terminal. Connect the negative voltmeter lead to the battery ground terminal. With the ignition switch OFF, the voltmeter should read zero.
3. Turn the ignition switch to the ON position, but do not start the engine. The voltmeter should read base voltage, as shown in Step 7 of *Charging System Test.*
4. If the voltmeter reads zero with the ignition ON, check and repair the S wire lead from the ignition switch to the regulator wiring plug.

IRS CHARGING SYSTEM

The IRS (internal regulator) system is used with 2.3L turbo diesel engines. The IRS system consists of the battery, alternator with internal voltage regulator, charge indicator light (or ammeter), fuse link and connecting wiring.

Charging System Test

See *EVR Charging System.* Substitute a voltmeter with a 0-30 volt scale and perform the *Charging System Test.*

Load Test

1. With the engine running, turn the headlights on high beam and the heater or air conditioner blower on HIGH speed.
2. Increase the engine speed to about 2,000 rpm. If the voltmeter does not read a minimum of 0.5 volt more than the base voltage, perform the *Under-voltage Test.*

Over-voltage Test

Refer to **Figure 11** for this procedure.
1. With the ignition ON (engine OFF), connect the negative voltmeter lead to the rear housing of the alternator. Connect the positive voltmeter lead first to the alternator output connection at the starter relay, then to the A screw head on the regulator. If the difference in readings exceeds 0.5 volt, there is excessive resistance (such as a break or bad connection) in the A wire circuit. Locate and correct as required.
2. Check for loose regulator-to-alternator ground screws. Tighten regulator ground screws to 15-26 in.-lb. (1.7-2.8 N•m).
3. If the voltage increase still exceeds 2 volts, connect the negative voltmeter lead to the alternator rear housing. With the ignition OFF, connect the positive voltmeter lead first to the regulator A screw head, then to the F screw head.
4. If the voltage reading is the same at both screw heads in Step 3, replace the regulator. If the reading differs, remove the alternator and take it to a dealer for further testing and service.

Under-voltage Test

1. With the engine off, disconnect the regulator wiring plug and connect an ohmmeter between the regulator A and F terminal screws (**Figure 12**). The meter should read more than 2.2 ohms. If it reads less than 2.2 ohms, remove the alternator and have a dealer check for a shorted rotor or field circuit.
2. If the meter reads more than 2.2 ohms, reconnect the regulator wiring plug. Connect the

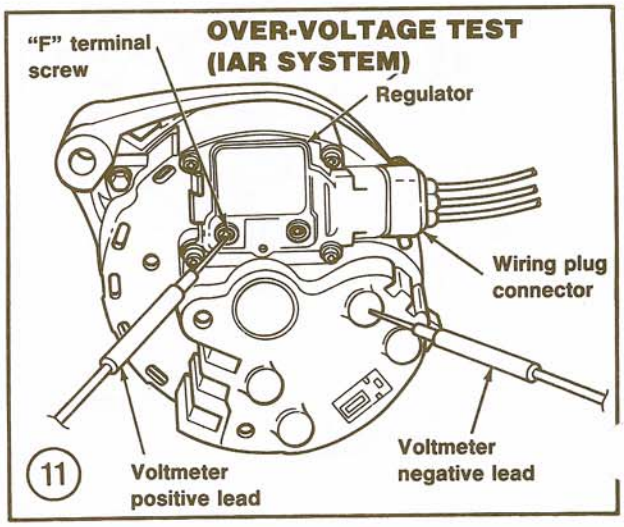

negative voltmeter lead to the alternator rear housing. Touch the positive voltmeter lead to the regulator A terminal screw. If the meter does not read battery voltage, there is an open in the A wire circuit. Locate and correct as required, then perform the *Load Test*.

3. If the voltmeter reads battery voltage in Step 2, connect the negative voltmeter lead to the alternator rear housing. With the ignition switch OFF, touch the positive voltmeter lead to the regulator F terminal screw. If the meter does not read battery voltage, there is an open in the field circuit. Locate and correct as required, then perform the *Load Test*.

4. If the voltmeter reads battery voltage in Step 3, connect the negative voltmeter lead to the alternator rear housing. Turn the ignition switch ON (engine OFF) and touch the positive voltmeter lead to the regulator F terminal screw. If the meter reading is 1.5 volts or less, proceed to Step 6.

5. If the meter reading in Step 4 exceeds 1.5 volts, perform the *I Circuit Test*. If this test is satisfactory, replace the regulator and perform the *Load Test*.

6. Disconnect the alternator wiring plug. Connect 12-gauge jumper wires between the alternator BAT (+) terminal blades and the corresponding wiring connector terminals. See **Figure 13**. Perform the *Load Test* but with the positive voltmeter lead connected to one of the jumper wire terminals. If the reading exceeds battery voltage by 0.5 volt, repair or replace the alternator-to-starter relay wiring.

7. If the reading in Step 6 does not increase more than 0.5 volt above battery voltage, connect a third jumper wire between the alternator rear housing and the regulator F terminal screw. Perform the *Load Test* with the positive voltmeter lead connected to one of the BAT (+) jumper wire terminals as in Step 6. If the voltage now increases more than 0.5 above battery voltage, replace the regulator.

8. If the reading in Step 7 does not increase more than 0.5 volt, remove the alternator and take it to a dealer for further testing and service.

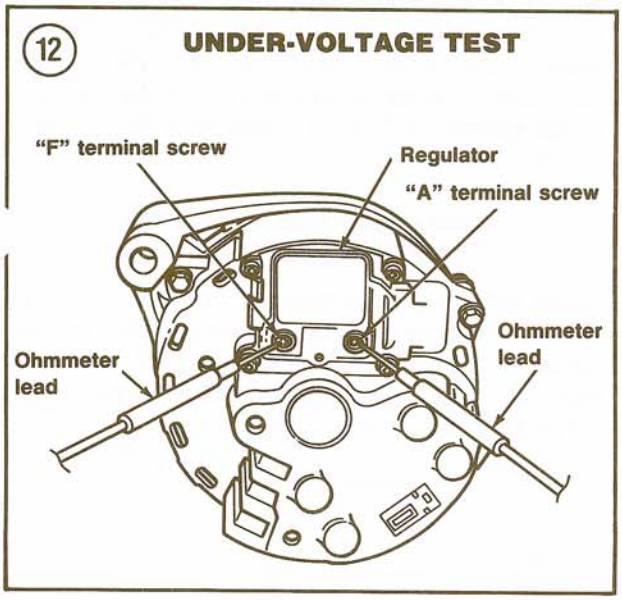

I Circuit Test

1. Disconnect the regulator wiring plug. Connect a jumper lead between the regulator "A" terminal and the wiring plug "A" terminal. Connect another jumper lead between the regulator "F" screw and the rear of the alternator housing. See **Figure 14**.

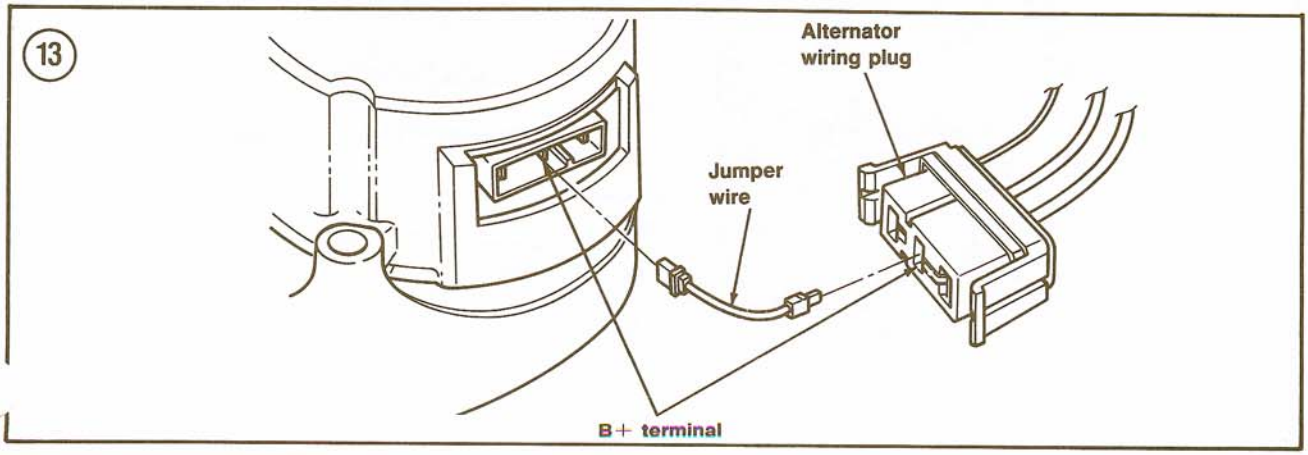

2. Start the engine and let it idle. Connect the negative voltmeter lead to the negative battery terminal and the positive voltmeter lead first to the wiring plug "S" terminal, then the "I" terminal while noting the meter readings. The voltage at the "S" terminal should be about one-half that shown at the "I" terminal.
3. If there is no voltage shown in Step 2, remove the alternator and take it to a dealer for further testing.

IGNITION SYSTEM

All vehicles use a breakerless ignition system. A Dura-Spark II ignition is used on all 1983-1984 4-cylinder and 1985-on 2.0L engines. All V6 and 1985-on 2.3L EFI engines use a Thick Film Integrated (TFI) ignition. See Chapter Eight.

Most problems involving a failure to start, poor driveability or rough running stem from trouble in the ignition system. Many novice troubleshooters assume that these symptoms point to the fuel system instead of the ignition system (remember our axioms?).

Note the following driveability symptoms:

a. Engine misses.
b. Stumbles on acceleration (misfiring).
c. Loss of power at high speed (misfiring).
d. Hard starting (if at all).
e. Rough idle.

These symptoms may be caused by one of the following:

a. Spark plug.
b. Secondary wires (thick wires running from distributor cap to spark plugs and ignition coil).
c. Distributor cap and rotor.
d. Ignition coil.

Most of the symptoms can also be caused by a clogged fuel injectors, a carburetor that is worn or improperly adjusted or a fuel pump that is about to fail. But considering the law of averages, the odds are far better that the source of the problem will be found in the ignition rather than the fuel system.

Ignition system troubles may be roughly divided between those affecting only one cylinder and those affecting all cylinders. If the problem affects only one cylinder, it can only be in the spark plug, secondary wiring or that part of the distributor associated with that cylinder. If the problem affects all cylinders (weak or no spark), then the trouble is in the ignition coil, rotor, distributor or associated wiring.

BREAKERLESS IGNITION TROUBLESHOOTING

The following basic tests are designed to quickly pinpoint and isolate problems in the primary circuit of a Dura Spark II ignition. The procedure requires only a spark tester (part No. D81P-6666-A) and an accurate digital

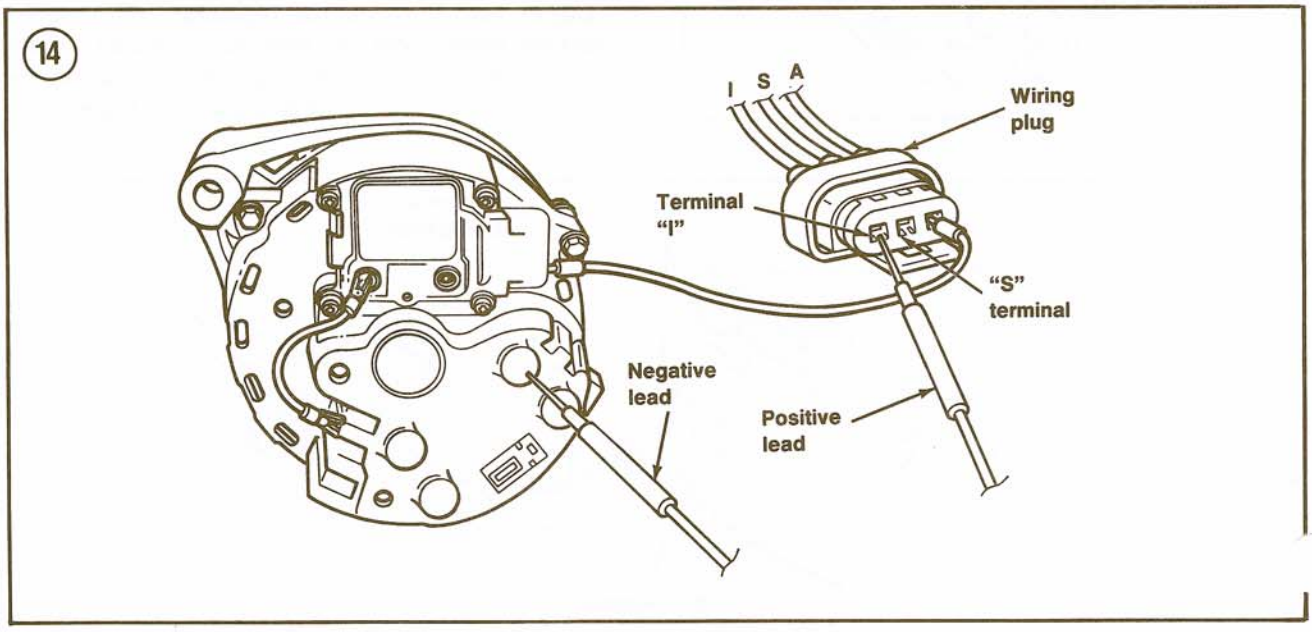

volt-ohmmeter (VOM). If the primary circuit checks out satisfactorily, refer to *Tune-up* in Chapter Three and check the distributor cap, rotor and spark plug wires.

No procedures are provided for use with the TFI-IV ignition. This is integrated with the electronic engine control (EEC) system and requires the use of expensive test equipment as well as specialized training. Troubleshooting of the TFI-IV ignition should be left to your Ford dealer.

Dura-spark II
Preliminary Check Procedure

1. Visually inspect the coil, spark plugs and ignition module for loose, dirty or corroded connections. Clean and tighten as required.
2. Make sure the armature roll pin is properly installed. See **Figure 15**. A missing pin will allow the armature to rotate on its shaft, resulting in erratic spark timing. Reinstall the distributor cap.

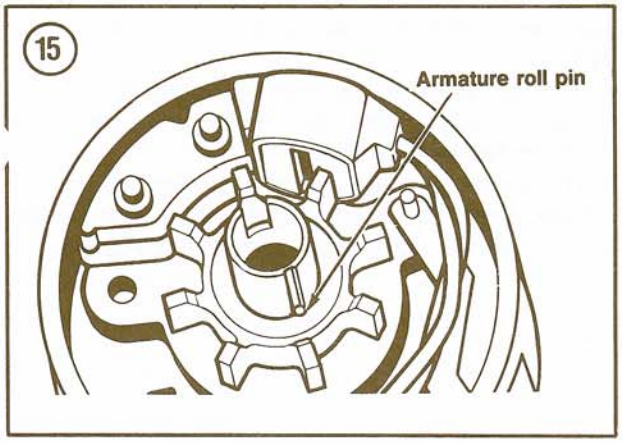

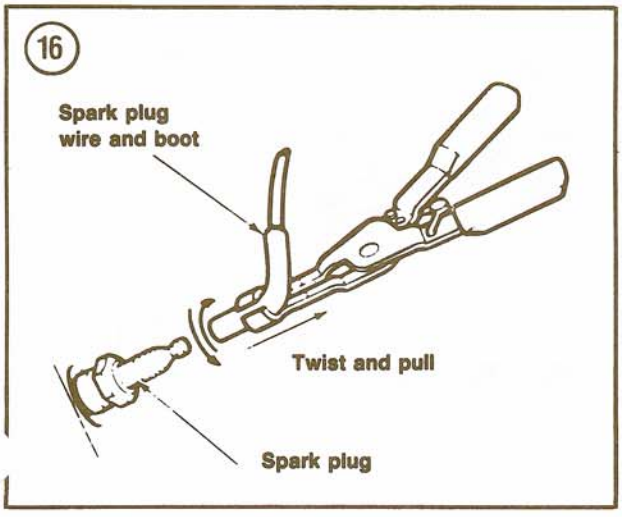

CAUTION

Step 3 should be completed as quickly as possible to prevent possible damage to the emission system components. Disconnect the Thermactor bypass valve vacuum line before starting this procedure. When testing has been completed, let the engine idle for 3-4 minutes before reconnecting the vacuum line.

3. Perform a spark intensity test as follows:
   a. Connect a remote start button to the engine according to manufacturer's instructions.
   b. Disconnect one spark plug wire from the plug.
   c. Insert a metal adapter in the plug boot and hold it about 3/16 in. from a clean engine ground with insulated pliers (**Figure 16**).
   d. Crank the engine briefly and note the spark intensity.
   e. Repeat the procedure to check each spark plug.

4A. If all plug wires deliver a strong bright spark, the secondary circuit is good, but one or more plugs could be weak. Inspect the spark plug condition as described in Chapter Three.

4B. If the spark is weak at some wires and good at others, check the secondary wiring and connections. If the secondary wiring checks out good, perform the *Ignition Switch Test* in this chapter and check for voltage drop between the battery and coil BAT terminal with the switch in both START and RUN positions. If the voltage drop is normal, the problem is either in the coil or the solid-state part of the circuit between the coil and distributor ground.

4C. If the spark is weak at all wires, proceed with Step 5.

5. Disconnect the coil-to-distributor secondary lead. Install spark tester (part No. D81P-6666-A) in the coil wire terminal and use the built-in alligator clip to ground it to the engine block. Crank the engine briefly and note the spark intensity. A good spark indicates possible trouble in the secondary circuit. If there is a weak spark or no spark, look for the problem in the coil, primary circuit or the coil-to-distributor secondary lead.

6. Check and adjust initial timing as required. See Chapter Three.

7. With the engine running (and the vacuum lines still disconnected and plugged), point the timing light at the timing marks and gradually increase

engine speed to approximately 2,500 rpm. If the timing marks do not advance smoothly, have the centrifugal advance mechanism checked and adjusted, as required.
8. With the engine at normal idle, connect the vacuum advance line at the distributor. Point the timing light at the timing marks and gradually increase engine speed to approximately 2,500 rpm. The total timing advance should be greater and quicker than in Step 7. If not, have the vacuum advance mechanism checked and adjusted, as required.

Dura-Spark II Test Procedures

If the preliminary check procedure does not locate the problem, perform the following tests with a digital volt-ohmmeter (VOM) as required. Wire colors specified for testing refer to the color of the ignition module wires. If working with the wiring harness, trace the wires back to the module for proper color identification.

There is no way to test the module, only the circuits feeding into it. Do not replace the module until the test sequence has proven all input circuits to be good. If one of the tests in the sequence indicates that you have found the problem, correct the defect and then repeat the test to make sure that it is the only problem. If correcting the defect does not solve the problem, continue the test sequence. If all input circuits are satisfactory, connect a known-good module to the wiring harness and perform the spark intensity test described under *Preliminary Check Procedure*. If the known-good module produces a strong, bright spark and the original module does not, replace the original module.

Whenever the module or distributor connectors are disconnected in the test sequence, they should be dipped in Lubriplate D.S. Compound to coat the inside of the connector completely with the grease, which prevents terminal corrosion. When reconnected, wipe any excess grease from the outside of the connectors.

Ignition Coil Primary Voltage Test

1. Turn the ignition switch to the RUN position.
2. Connect a voltmeter between the coil BAT terminal and ground.
3. Note the voltmeter reading, then turn the ignition switch OFF.
4. A reading of 6-8 volts indicates that the coil primary voltage is satisfactory. Perform the *Module Run Circuit Test*.
5. If the reading is more than 8 volts, perform the *Ground Circuit Test*.
6. If the reading is less than 6 volts, perform the *Wiring Harness Test* and the *Ignition Coil Circuit Test*. If both tests are satisfactory, replace the ignition switch.

Module Run Circuit Test

Refer to **Figure 17** for this procedure.
1. Insert a small straight pin in the white module wire. Do not let the pin touch anything that can ground it.
2. Connect a voltmeter between the pin and ground.
3. Turn the ignition switch to the RUN position, note the voltmeter reading and turn the switch OFF.
4. A reading of 90 percent or more of battery voltage indicates that the module run circuit is good. Perform the *Start Circuit Test*.
5. If the reading is less than 90 percent of battery voltage, perform the *Wiring Harness Test*. If the problem cannot be located, replace the harness.

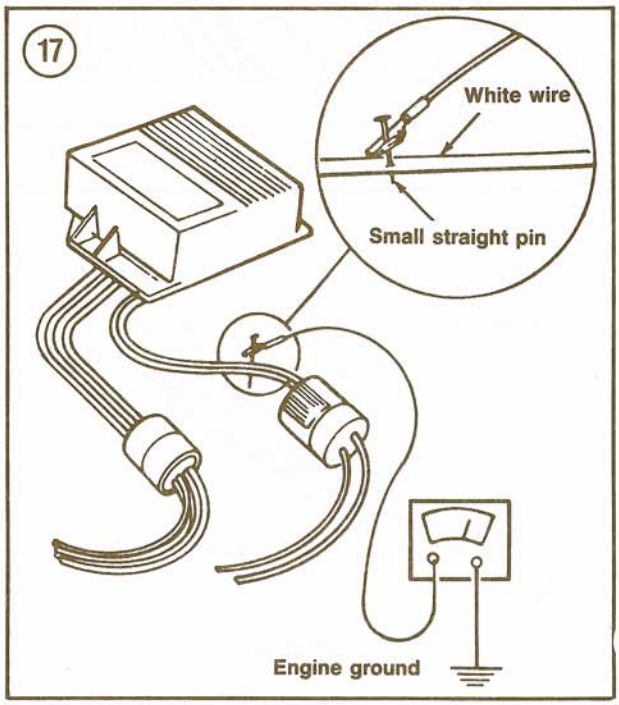

Start Circuit Test

Refer to **Figure 18** for this procedure.

1. Disconnect the starter relay-to-starter motor cable at the relay I terminal. If relay has no I terminal, disconnect the wire at the S terminal.
2. Connect a voltmeter between the coil BAT terminal and ground. Hold the ignition switch in the START position, note the voltmeter reading and turn the switch OFF.
3. Insert a small straight pin in the red module wire. Do not let the pin touch anything that can ground it.
4. Connect a voltmeter between the pin and ground. Hold the ignition switch in the START position, note the voltmeter reading and turn the switch OFF.
5. A reading of 90 percent or more of battery voltage indicates that the start circuits are good. Perform the *Distributor Stator Assembly Test.*
6. If the reading is less than 90 percent of battery voltage, the problem is in the ballast resistor bypass circuit, the wiring harness or a defective ignition switch.

Wiring Harness Test

1. Visually check the harness for overheated, burned or bare wires, especially those connected to the red, white and green module leads and the BAT and TACH terminals of the ignition coil connector.
2. Disconnnect the ignition module and coil connectors. Check connectors for dirt, corrosion or damage.
3. Measure the resistance between engine ground and those terminals in the harness connector that mate with the purple and orange module wires.
4. Measure the resistance between the harness connector terminals that mate with the red to white, green, orange and purple wires.
5. Measure the resistance between the harness connector terminals that mate with the white to green, orange and purple wires.
6. All resistance measurements should be greater than 70,000 ohms. If so, perform the *Distributor Stator Assembly Test.*
7. Replace the wiring harness if any measurements are less than 70,000 ohms.

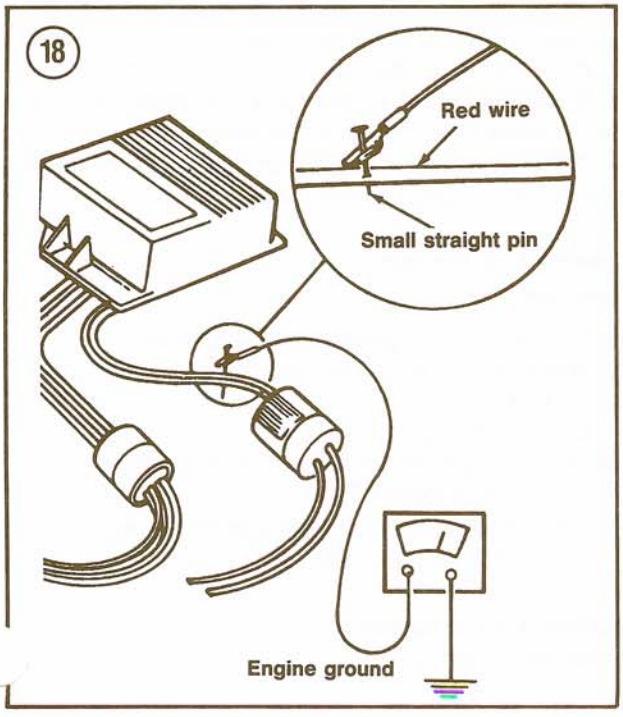

Ground Circuit Test

1. Disconnect the ignition module connectors. Check connectors for dirt, corrosion or damage.
2. Measure the resistance between the black distributor wire and ground, wiggling the distributor grommet while taking the reading.
3. Measure the resistance between the wiring harness connector terminals that mate with the black distributor and module wires.
4. A reading of less than one ohm indicates that the ground circuit is good. Perform the *Ignition Coil Circuit Test.*
5. If the reading is greater than one ohm, recheck the ground screw in the distributor (Step 2 of *Preliminary Check Procedure*). If this is not the problem, replace the wiring harness.

Ignition Coil Circuit Test

1. Disconnnect the ignition module and coil connectors. Check connectors for dirt, corrosion or damage.
2. Measure the resistance between the wiring harness connector that mates with the green module wire and the ignition coil connector TACH terminal.
3. If the reading in Step 2 is less than one ohm, proceed with Step 4. If the reading is more than one ohm, replace the wiring harness.
4. Connect the volt-ohmmeter between the ignition coil connector BAT terminal and the

wiring harness connector terminal that mates with the red module lead.
5. If the reading in Step 4 is 0.6-1.6 ohms, the ballast resistor is good. Perform the *Distributor Stator Assembly Test*. If the reading is more or less than specified, replace the ballast resistor.

Distributor Stator Assembly Test

1. Disconnect the 4-wire module connector. Check connector for dirt, corrosion or damage.
2. Measure the resistance between the wiring harness connector terminals that mate with the purple and orange module leads. If the reading is 400-1,000 ohms, the stator assembly and wiring harness are good. Perform the *Stator Assembly Output Voltage Test.*
3. If the reading is not within specifications in Step 2, disconnect the distributor connector. Check connector for dirt, corrosion or damage.
4. Measure the resistance between the purple and orange wire terminals in the connector. If the reading is 400-1,000 ohms, the stator assembly is good but there is a problem in the wiring harness. Repair or replace the harness as required.
5. If the reading is not within specifications in Step 4, replace the distributor stator assembly.

Stator Assembly Output Voltage Test

1. Connect the volt-ohmmeter leads between the 4-wire module connector terminals that mate with the purple and orange module leads.
2. Set the volt-ohmmeter to the 2-volt DC range and crank the engine. If the meter needle wavers, the stator assembly output voltage is satisfactory.
3. If the meter needle does not waver in Step 2, replace the stator assembly.

Module Output Test

Under some conditions, it may not be possible to obtain a satisfactory needle movement with a volt-ohmmeter. If necessary, a 12-volt DC test lamp can be substituted for the meter.
1. Connect the positive volt-ohmmeter lead to the ignition coil TACH terminal and the negative lead to a good engine ground.
2. Disconnect the ignition coil-to-distributor secondary lead at the distributor and connect it to ground with a jumper wire.
3. Set the volt-ohmmeter to the 50-volt DC range and crank the engine. While cranking the engine, switch the tester to the 2-volt DC range. If the meter needle wavers (or test light flashes), the module output is good. Perform the *Ignition Coil Primary Resistance Test.*
4. If the meter needle does not waver (test light does not flash) in Step 3, perform the *Module Input Test.*

Module Input Test

1. Connect a voltmeter between the battery terminals and note the reading. This is battery voltage.
2. Disconnect the 4-wire module connector.
3. Connect the positive volt-ohmmeter lead to the harness connector terminal that mates with the green module lead. Connect the negative lead to a good engine ground.
4. Turn the ignition switch to the RUN position, note the reading and then turn the switch OFF.
5. A reading of 90 percent or more of battery voltage indicates that the module input circuit is good. Perform the *Continuity Test.*
6. If the reading is less than 90 percent of battery voltage, replace the module.

Continuity Test

1. Measure the continuity between ground and the harness connector terminal that connects the green module wire with the coil TACH terminal.
2. If the resistance is less than one ohm, perform the *Ignition Coil Primary Resistance Test.*
3. If the resistance is more than one ohm, repair or replace the wiring harness as required.

Ignition Coil Primary Resistance Test

1. Disconnect the ignition coil connector.
2. Measure the resistance between the coil BAT and TACH terminals.
3. If the reading is 1-2 ohms, the coil primary resistance is satisfactory. Perform the *Ignition Coil Secondary Resistance Test.*
4. If the reading is not within specifications in Step 3, replace the ignition coil.

Ignition Coil Secondary Resistance Test

1. Disconnect the ignition coil connector.

2. Measure the resistance between the BAT and high voltage (center tower) coil terminals.
3. If the reading is 7,700-9,600 ohms, the coil secondary resistance is satisfactory.
4. If the reading is not within specifications in Step 3, replace the ignition coil.

Ignition Switch Test

Refer to **Figure 19** for this procedure.
1. Fabricate a 10 in. jumper lead with a slip-on terminal on one end and a spade terminal on the other. Strip the insulation from a short section in the middle of the jumper lead.
2. Disconnect the ignition switch wiring connector at the steering column.
3. Connect the spade end of the jumper lead to the wiring connector and the slip-on end to the ignition switch as shown in **Figure 19**.
4. Connect a voltmeter between the positive battery terminal and the bare section of the jumper lead. Note the voltmeter reading.
5. Connect a jumper lead between the coil DIST terminal and a good engine ground.
6. Make sure all lights and accessories are off. Turn the ignition switch ON. Compared to the reading obtained in Step 4.
7. Note the voltage drop on the meter. If 0.3 volts or less, the ignition switch and switch-to-relay wire is good. If greater than 0.3 volts, either the ignition switch or the switch-to-relay wiring is defective.

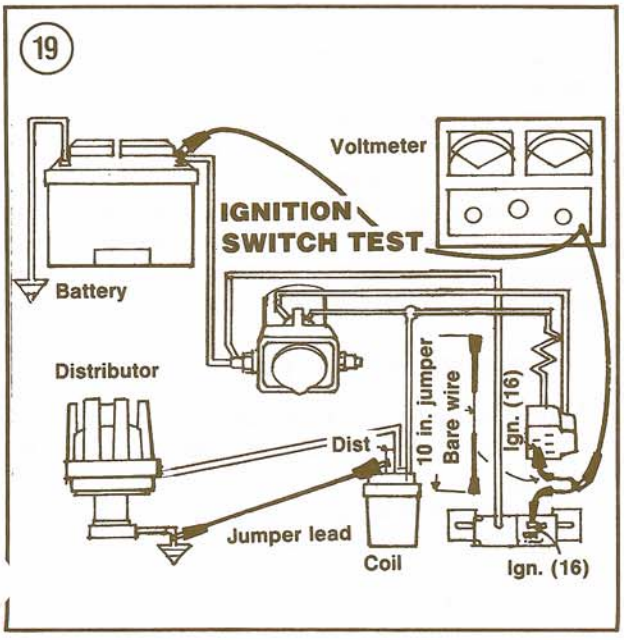

Diagnosing Intermittent Problems

If the ignition system becomes functional during the test sequence without any repairs being made, there is an intermittent connection or component failure in the system. To locate this type of problem, it is necessary to recreate the problem you originally sought to locate. Ford offers the following suggestions:
1. Start the engine and run at idle. Wiggle the wires at each connection and component. Disconnect and reconnect each connector.
2. Shut the engine off. Remove the distributor cap and rotor.
3. Disconnect the distributor connector and connect an ohmmeter between the parallel blades of the connector.
4. Hold a 250-watt heat lamp about 1-2 inches from the top of the stator pick-up coil for several minutes, watching the ohmmeter scale. Occasionally tap the pick-up coil lightly with a screwdriver handle. If the meter scale reads less than 400 ohms, there is a short in the circuit. A reading of more than 1,000 ohms indicates an open circuit.
5. Start the engine and hold the heat lamp about 1-2 inches from the top of the ignition module. Occasionally tap the top of the module case lightly with a screwdriver handle. If the module does not malfunction within 10 minutes, apply a few droplets of water to the module case every 2 minutes until they boil. At this point, remove the heat lamp as the module temperature should not be allowed to exceed 212° F.
6. If the intermittent problem cannot be recreated, refer the vehicle to your Ford dealer for further testing.

FUEL SYSTEM (CARBURETTED)

Fuel system problems must be isolated to the fuel pump, fuel lines, fuel filter or carburetor. The following procedures assume that the ignition system is working properly and is correctly adjusted.
1. *Engine will not start*—Make sure there is gas in the tank and that it is being delivered to the carburetor. Remove the air cleaner cover, look into the carburetor throat and operate the throttle linkage several times. There should be a stream of fuel from the accelerator pump discharge tube each time the linkage is moved. If not, check the fuel

pump pressure as described in Chapter Six. Also check the float condition and adjustment. If the engine will not start, check the automatic choke parts for sticking or damage. If necessary, rebuild or replace the carburetor as described in Chapter Six.

2. *Engine runs at fast idle*—Check the choke setting, idle speed and mixture adjustments.

3. *Rough idle or engine miss with frequent stalling*—Check choke linkage for proper adjustment. Check throttle stop screw adjustment. Check for sticking throttle plates. Set idle speed to specifications. Check float adjustment. If equipped with a hot idle compensator, it may be stuck open or closed.

4. *Engine "diesels" (continues to run) when ignition is switched off*—Check idle mixture (probably too lean), ignition timing and idle speed (probably too fast). Check linkage to make sure the fast idle cam is not hanging up. Check for engine overheating.

5. *Stumbling when accelerating from idle*—Check accelerator pump action (Step 1). Check for a clogged fuel filter, low fuel pump volume, plugged bowl vents or a power valve that is stuck closed.

6. *Engine misses at high speed or lacks power*—This indicates possible fuel starvation. Check accelerator pump action (Step 1). Check float setting. Check for a plugged pump discharge nozzle or leaking nozzle gasket.

7. *Engine stalls on deceleration or during a quick stop*—Adjust idle speed to specifications. Check throttle positioner functioning. Check for leaking intake manifold or carburetor gasket(s).

8. *Engine will not reach wide-open throttle; top speed and power is reduced*—Check throttle linkage for binding. Check for low fuel pump volume, incorrect float drop, a clogged fuel filter, stuck power valve or an inoperative secondary system.

9. *Engine surges at cruising speed*—Check for a plugged fuel filter. Adjust float level and drop. Check for low fuel pump volume or pressure. Check fuel for contamination. Check for blocked air bleeds or leaking plugs/lead seals.

10. *Black exhaust smoke*—Check for an excessively rich mixture. Check idle speed adjustment and choke setting. Check for excessive fuel pump pressure, leaky float(s) or worn needle valve(s).

11. *Excessive fuel consumption*—Check for an excessively rich mixture or misblended gasohol. Check choke operation. Check idle speed and mixture adjustments. Check for excessive fuel pump pressure, leaky float or worn needle valve.

CLYMER QUICK TIP

Contrary to what manufacturers would have you believe, the composition material used in floats does gradually absorb fuel over a period of time. Such fuel absorption increases the weight of the float and prevents it from operating properly when set to correct specifications.

To check a composition float for fuel absorption, remove it from the carburetor, hold it between a thumb and finger and gently press the a fingernail into the surface. If moisture appears where your fingernail pressed, the float has started to absorb fuel.

Since floats are quite expensive, the best way to determine if fuel absorption has affected float performance is to weigh it with an inexpensive float scale available in most auto supply stores. The scale comes with weight specifications for all new floats and can immediately pinpoint a fuel system problem that's often overlooked.

FUEL SYSTEM (ELECTRONIC FUEL INJECTION)

Troubleshooting a fuel injection system requires more thought, experience and knowledge than any other part of the vehicle. A logical approach and proper test equipment are essential in order to successfully find and fix these troubles.

Injectors and other injection system components are also very expensive. You cannot afford to troubleshoot the system by replacing all 4 or 6 injectors on the off-chance that it will solve the problem. Since the injection system is electronically controlled by the EEC-IV microprocessor, system operation is more complex. You cannot "adjust" components to perform as you would like them to if such adjustments are not within the parameters of the microprocessor program.

It is best to leave fuel injection troubles to your dealer. In order to isolate a problem to the injection system, make sure that the fuel and air cleaner filters are not clogged.

EMISSION CONTROL SYSTEMS

Major emission control systems used on gasoline models covered in this manual include the following:

a. Positive crankcase ventilation (PCV) system.
b. Heated air cleaner intake.
c. Thermactor (air injection) system.
d. Evaporative emission control (EEC) system.
e. Exhaust gas recirculation (EGR) system.

Emission control system operation varies considerably depending upon model year and engine application. Many of the systems and components are factory set and sealed. Without special and expensive test equipment, it is impossible to adjust the systems to meet state and Federal requirements.

Troubleshooting can also be difficult without special equipment. The procedures described in Chapter Six will help you find emission control components which have failed, but repairs may have to be entrusted to a dealer or other properly equipped repair shop.

CLYMER QUICK TIP

The substitute additives now being used in place of lead in gasoline have a tendency to clog fuel injectors. Since each gasoline refiner uses a different combination of additives, the problem varies according to gasoline brand and area of the country in which it is sold. However, clogged injectors have become a fact of life for owners of fuel injected vehicles, who are quickly learning that injectors are expensive to replace.

Chevron markets a fuel injector cleaner (detergent) under its own brand name (Techron) and private-labels it for other companies. The cleaner is very efficient and used ***exactly*** *as directed on the container, will clean clogged injectors and keep them clean. Failure to follow the instructions properly and/or excessive use, however, can result in even more damage, as its detergent action will clean rust out of the fuel tank and send it to the injectors.*

If you have an injector problem, do not hesitate to use this cleaner, but do use it properly.

ENGINE NOISES

Often the first evidence of an internal engine problem is a strange noise. That knocking, clicking or tapping sound which you never heard before may be warning you of impending trouble.

While engine noises can indicate problems, they are difficult to interpret correctly; inexperienced mechanics can be seriously misled by them.

Professional mechanics often use a special stethoscope (which looks like a doctor's stethoscope) for isolating engine noises. You can do nearly as well with a "sounding stick" which can be an ordinary piece of doweling, a length of broom handle or a section of small hose. By placing one end in contact with the area to which you want to listen and the other end near your ear, you can hear sounds emanating from that area. The first time you do this, you may be horrified at the strange sounds coming from even a normal engine. If you can, have an experienced friend or mechanic help you sort out the noises.

Clicking or Tapping Noises

Clicking or tapping noises usually come from the valve train and indicate excessive valve clearance. A sticking valve may also sound like a valve with excessive clearance. In addition, excessive wear in valve train components can cause similar engine noises.

Knocking Noises

A heavy, dull knocking is usually caused by a worn main bearing. The noise is loudest when the engine is working hard, such as accelerating at low speed. You may be able to isolate the trouble to a single bearing by disconnecting the spark plugs one at a time. When you reach the spark plug nearest the bearing, the knock will be reduced or disappear. When doing this on vehicles with a catalytic converter, disconnect the Thermactor bypass valve vacuum line and work quickly to prevent converter damage. Let the engine run for 3-4 minutes after troubleshooting before reconnecting the vacuum line.

Worn connecting rod bearings may also produce a knock, but the sound is usually more metallic. As with a main bearing, the noise is worse during acceleration. It may increase just as you go from acceleration to coasting. Disconnecting the spark plugs will help isolate this knock as well.

A double knock or clicking usually indicates a worn piston pin. Disconnecting spark plugs will isolate this to a particular piston; however, the noise will *increase* when you reach the affected piston.

A loose flywheel and excessive crankshaft end play also produce knocking noises. While similar to main bearing noises, they are usually intermittent, not constant, and they do not change when spark plugs are disconnected. When caused by a loose flywheel or drive plate coupling, the noise is generally heard at idle or during rapid deceleration.

Some mechanics confuse piston pin noise with piston slap (excessive piston clearance). The double knock will distinguish piston pin noise. Piston slap will always be louder when the engine is cold.

GASOLINE ENGINE TROUBLESHOOTING

These procedures assume the starter cranks the engine over normally. If not, refer to the *Starter* section of this chapter.

Engine Won't Start

This can be caused by the ignition or fuel system. Refer to the *Ignition System* section of this chapter and perform a Spark Intensity Test. If sparks occur, the problem is more likely in the fuel system. If they do not occur, check the ignition system.

Engine Misses Steadily

Remove one spark plug wire at a time and ground the wire. If engine miss increases, that cylinder is working properly. Reconnect the wire and check another. When a wire is disconnected and engine miss remains the same, that cylinder is not firing. Perform the spark intensity test described in Step 3 of *Dura-spark II Preliminary Check Procedure* in this chapter. If no spark occurs for the suspected cylinder, check the distributor cap, wire and spark plug. See Chapter Three. If a spark occurs properly, check cylinder compression and intake manifold vacuum (Chapter Three).

Engine Misses Erratically at All Speeds

Intermittent problems can be difficult to locate. This could be in the ignition system, exhaust system or fuel system. Start with the secondary ignition wiring and follow the troubleshooting procedures for each system to isolate the cause.

Engine Misses at Idle Only

The problem could be in the ignition system, carburetor idle adjustment or EGR system. Have the idle mixture adjustment checked and inspect idle circuit for restrictions.

Engine Misses at High Speed Only

Check the accelerator pump operation and fuel pump delivery. Look for a restricted fuel line. Check the spark plugs and wires.

Low Performance at All Speeds, Poor Acceleration

Usually an ignition or fuel system problem. May also be an intake manifold or carburetor vacuum leak.

CLYMER QUICK TIP

To check for a leaking V6 intake manifold gasket, use a garden hose to run water along the mating surface on each side with the engine idling. The V-design of the engine will allow enough water to accumulate to temporarily seal any leak. If the engine idle suddenly smooths out, the gasket is leaking.

Although oil or carburetor cleaner is often used to troubleshoot this problem, water is preferred, as it is both cleaner and safer. Water does not leave the messy residue of oil and is not dangerous like carburetor cleaner.

Tighten the bolts on a leaking intake manifold first to see if this eliminates the problem. However, tightening the manifold on engines which use a metal valley cover with laminated gasket sections will not work. The laminated gasket material is causing the leak and the entire valley cover will have to be replaced.

Excessive Fuel Consumption

Check for a plugged or restricted air cleaner filter element. If the engine uses a feedback carburetor, the stepper motor or feedback solenoid may have failed. Misblended gasohol will also cause the problem, although there will be driveability problems at the same time.

A number of other seemingly unrelated factors can cause this problem. Check for clutch slippage (Chapter Nine), brake drag (Chapter Thirteen), defective wheel bearings (Chapter Ten or Chapter Twelve), poor front-end alignment (Chapter Ten or Chapter Twelve), faulty ignition (Chapter Eight) and leaking fuel lines or gas tank.

Low Oil Pressure Indicated by Oil Pressure Gauge or Warning Light

Proper oil pressure to the engine is vital. If oil pressure is insufficient, the engine can destroy itself in a comparatively short time. The oil pressure warning circuit monitors oil pressure constantly. If pressure drops below a predetermined level, the warning light comes on. If it doesn't, there is trouble in the warning circuit, not the oil pressure system.

Once the engine is running, the warning light should stay off. If the warning light comes on or acts erratically, or if the oil pressure gauge shows low oil pressure (less than 6 psi) with the engine running, there is trouble with the engine oil pressure system. Stop the engine immediately and coast to a stop with the clutch disengaged (manual) or the transmission in neutral (automatic).

The problem may be caused by low oil level, blockage in an oil line, a defective oil pump, overheated engine or a defective sending switch. Check the oil level and drive belt tension. Check for a shorted oil pressure sender with an ohmmeter (gauge) or by grounding the sender lead to the engine block (warning lamp). Do not restart the engine until you know why the low indication was given and are sure the problem has been corrected.

Engine Overheats

Usually caused by a cooling system problem, although late ignition or valve timing can be responsible. Check the coolant level in the recovery tank. If there is no fluid in the tank, check the radiator. Check the condition of the drive belt. Check the cooling system hoses for leaks and loose connections. Check the cooling fan operation (Chapter Seven).

Engine Stalls As It Warms Up

The choke valve may be stuck closed, the manifold heat control valve may be stuck, the engine idle speed may be set too low, or the PCV or EGR valve may be defective.

Engine Stalls After Idling or Slow-speed Driving

This can be caused by a defective fuel pump, overheated engine, incorrect float level or idle adjustment, or a defective PCV or EGR valve.

Engine Stalls After High-speed Driving

Vapor lock within the fuel lines caused by an overheated engine and/or hot weather is the usual cause of this trouble. Inspect and service the cooling system (Chapter Seven). If the problem persists, change to a different fuel or shield the fuel line from engine heat.

Engine Backfires

There are several possible reasons for this problem: incorrect ignition timing, overheating, excessive carbon, spark plugs with an incorrect heat range, hot or sticking valves and/or a cracked distributor cap.

Smoky Exhaust

Blue smoke indicates excessive oil consumption usually caused by worn piston rings. Black smoke indicates an excessively rich fuel mixture.

Excessive Oil Consumption

This can be caused by external leaks through broken seals or gaskets, or by burning oil in the combustion chambers. Check the oil pan and the front/rear of the engine for signs of oil leakage. If the oil is not leaking externally, valve stem clearances may be excessive, valve seals may be defective, piston rings may be worn, or cylinder walls may be scored. A gummy black deposit on spark plug electrodes indicates oil fouling. A compression test, described in Chapter Three, may help isolate the cause.

DIESEL ENGINE TROUBLESHOOTING

The following troubleshooting procedures apply only to diesel engine systems.

Incorrect or Uneven Idle Speed

The engine should be warmed to normal operating temperature (upper radiator hose hot) and all accessories turned OFF before attempting to discover the cause of the problem.

1. *Linkage adjustment*—Check for loose or incorrect idle screw setting. If necessary, adjust the idle screw to obtain the specified rpm. Check the throttle cable for looseness, tightness, binding, etc. and correct as required.
2. *Air in fuel system*—Drain the water-separator to remove air or water from the fuel system. See *Diesel Engine Tune-up*, Chapter Three.
3. *Fuel restriction*—Check the system for blocked fuel lines, bent or kinked lines, over-tightened connections and a clogged fuel filter. Repair or replace, as required.
4. *Injection problems*—Have the injection pump timing checked. Also check for dirty or corroded

injectors and incorrect fuel pressures. Correct or replace, as required.
5. *Engine mechanical problems*—Have valve clearance and engine compression checked. Also check engine for proper mounting.

Engine Will Not Start

Make sure that there is adequate fuel in the tank and that the starter is cranking the engine at a normal speed before proceeding.
1. *Defective throttle and engine stop controls*—Check all throttle controls for damage and lack of free movement. The throttle lever must reach the speed stop or top speed and power will be reduced. Readjust linkage, if necessary.
2. *Malfunctioning glow plugs*—Connect a voltmeter between any glow plug terminal (wires connected) and ground. Turn the ignition switch ON.
   a. The meter should read 11 volts and the wait-to-start signal lamp should light as soon as the ignition is ON. This tells you the control module and No. 1 relay are operating properly.
   b. The signal lamp should go out after about 3 seconds if the control module timer is working properly.
   c. The voltmeter should read 4.2-5.3 volts after about 6 seconds. This tells you the control module, No. 2 relay and glow plug resistor are working properly.
3. *Fuel system problem*—Determine if fuel is being delivered to the injectors by loosening the fuel line to one injector and cranking the engine. Make sure that all fuel lines are connected to the proper injectors. Also check for leaking or blocked fuel lines and a clogged fuel filter. Drain the water separator. See *Diesel Engine Tune-up*, Chapter Three.

Smoking Exhaust

Some smoke is normal and should be expected from a diesel engine.
   a. Black smoke usually indicates that excessive fuel is reaching the combustion system. It is more common at higher than at lower altitudes. If noted at idle or during normal driving conditions at low altitude, it should be diagnosed as soon as possible.
   b. Blue or gray smoke indicates burning oil.
   c. White smoke is usually water vapor (steam), and is generally noted during engine start-up. It should disappear after a minute or so of engine operation but may return in cool weather during extended idling. White smoke can also result from a leak in the cooling system.

Visible exhaust gases that occur when the engine is cold but disappear when the engine warms up may be ignored, as a rule. The exhaust may also "smoke" when the engine is being "lugged down" in an incorrect gear. This "smoking" may also be ignored in most cases. Some common causes of visible exhaust from diesel engines are:
1. *Dirty air cleaner or fuel filter*—Clean or replace the air cleaner element or replace the fuel filter element as required.
2. *Injection system problem*—Have injection pump timing checked. Check maximum engine speed and adjust to specifications, if necessary. Have injection pressure and injector condition checked; injectors may be sticking, leaking or otherwise damaged.
3. *Engine mechanical problem*—Have valve clearance checked. Also check for leaking valves, defective valve stem seals and worn valve guides. A compression test will check for sticking or worn piston rings, worn cylinders and/or pistons or a leaking head gasket.
4. *Exhaust system problem*—Check for kinks or dents in the exhaust system. These will cause high backpressure, which results in high smoke levels and low power.

Excessive Fuel Consumption

One of the most frequent causes of excessive fuel consumption is a dirty air cleaner filter. Check the filter element and clean or replace as required before proceeding. Also check the fuel system for leaks and blockages. Correct any that are found.
1. *Injection system problem*—Perform the checks decribed in Step 2, *Smoking Exhaust* in this chapter.
2. *Engine mechanical problem*—Perform the checks described in Step 3, *Smoking Exhaust* in this chapter.
3. *External leakage*—Leakage will result in high consumption of fuel and oil. An air intake leak can also reduce engine service life, especially if the truck is driven under dusty conditions.

Lack of Power

A number of conditions can cause a lack of power. Before proceeding, make sure that the speedometer/odometer is in good working order, the vehicle is equipped with standard size wheels and tires that are properly inflated, the brakes are not binding, the clutch is in good condition and properly adjusted and that the throttle pedal, cable and injection pump linkage are not restricted, loose or improperly adjusted. Also check the air cleaner filter element and clean or replace as required. Check the exhaust system for kinks or dents that can cause high backpressure. Correct if necessary.

1. *Fuel system problem*—Check for clogged fuel lines, a clogged fuel filter, air in the fuel system, kinked injector lines, loose injector connections and improperly connected injector lines. Also check for system leaks. Correct as required.
2. *Injection system problem*—Have injection pump timing checked. Check and adjust fast idle speed, if necessary. Check for damaged injectors and/or a defective injection pump.
3. *Engine mechanical problem*—Have valve clearances checked. A compression test will check for sticking or worn piston rings, worn cylinders and/or pistons or a leaking head gasket.

CLUTCH TROUBLESHOOTING

Several clutch problems may be experienced. Usually the trouble is quite obvious and will fall into one of the following categories.

1. Slipping, chattering or grabbing when engaging.
2. Spinning or dragging when disengaged.
3. Clutch noises, clutch pedal pulsations and rapid clutch disc facing wear.

Clutch service procedures are covered in Chapter Nine.

Clutch Slips While Engaged

Clutch linkage is improperly adjusted, the pressure springs are weak or broken, the friction disc facings are worn or the disc is contaminated with grease or oil.

This problem is most noticeable when accelerating in a high gear at a relatively low speed. To check slippage, park the vehicle on a level surface with the parking brake set. Shift to 2nd gear and release the clutch as if driving off. If the clutch is good, the engine will slow and stall. If the clutch slips, continued engine speed will give it away.

Clutch Chatters or Grabs When Engaging

Clutch linkage is improperly adjusted, the friction disc facings are contaminated with grease or oil or clutch components are worn and/or damaged.

Clutch Spins or Drags When Disengaged

The clutch friction disc normally spins briefly after engagement and takes a moment to come to rest. This sound should not be confused with drag.

Drag is caused by the friction disc not being fully released from the flywheel or pressure plate as the clutch pedal is depressed. It usually causes difficult shifting and gear clash, especially when downshifting. This problem can be caused by misadjusted linkage or defective/worn clutch components.

Clutch Noises

Clutch noise is generally most noticeable when the engine is idling. Note whether the noise is heard when the clutch is engaged or disengaged. Clutch noises when engaged could be caused by a loose friction disc hub, loose disc springs and misalignment or looseness of the engine or transmission mounts. When disengaged, noises can be caused by a worn release bearing, defective pilot bearing or a misaligned release lever.

Clutch Pedal Pulsates

This problem is generally noticed when slight pressure is applied to the clutch pedal with the engine running. As pedal pressure is increased, the pulsation ceases. Possible causes include misalignment of the engine and transmission, a bent crankshaft flange, distortion or shifting of the clutch housing, a misaligned release lever, warped friction disc or a damaged pressure plate.

Rapid Friction Disc Facing Wear

This problem is caused by any condition that permits slippage between the facings and the flywheel or pressure plate. Probable causes are "riding" the clutch, slow releasing of the clutch after disengagement, weak or broken pressure

springs, misadjusted pedal linkage and a warped clutch disc or pressure plate.

CLYMER QUICK TIP

Leaks under a vehicle indicate trouble ahead. The problem is two-fold: identifying the type of fluid leaking and determining where it is coming from. If you can correctly identify the type of fluid, it will narrow down the places to look for the leak considerably.

Manufacturers put dyes into various automotive fluids to help in identifying them, but after a period of use in the hot engine/transmission/cooling system, the dyes lose their potency and cannot be easily seen under certain conditions. For example, automatic transmission fluid contains a red dye. if the fluid is burned, however, its color changes.

To troubleshoot a leak, blot a small amount of the fluid from the puddle under the vehicle on the edge of a clean paper towel. Remove each dipstick (crankcase, transmission, power steering, etc.) in turn and wipe a small amount of the fluid on the dipstick beside the leak blot on the paper towel. One of the fluids will be a near-perfect match for that found under the vehicle.

MANUAL TRANSMISSION TROUBLESHOOTING

Manual transmission problems are evident when one or more of the following symptoms appear:

a. Difficulty changing gears.
b. Gears clash when downshifting.
c. Slipping out of gear.
d. Excessive noise in NEUTRAL.
e. Excessive noise in gear.
f. Oil leaks.

Transmission troubles are sometimes difficult to distinguish from clutch problems. Eliminate the clutch as a source of the problem before installing a new or rebuilt transmission. Transmission service procedures are covered in Chapter Nine.

Hard Shifting Into Gear

Common causes of this problem include a clutch that does not release properly, misadjusted or insufficiently lubricated linkage, a stuck detent ball or gears that are tight on the shaft spline.

Transmission Slips Out of Gear

This problem can result from misadjusted linkage, transmission and engine misalignment, worn gear teeth, a gear that is too loose on the mainshaft, excessive mainshaft end play, worn bearings, a defective synchronizer or insufficient shift lever spring tension.

No Power Through Transmission

Look for a slipping clutch, stripped gear teeth, a damaged shift fork or shift fork linkage, a broken gear or shaft or a stripped drive key.

Transmission is Noisy in Neutral

The transmission and engine are misaligned, bearings are worn or dry, the gears are worn, the countershaft is worn, bent or has excessive end play.

Transmission is Noisy in Gear

May result from a defective clutch disc, loose gears and the faults which cause noise in NEUTRAL.

Gears Clash During Shifting

This may be caused by a clutch that does not release properly, a defective synchronizer or gears that stick on the mainshaft.

Oil Leaks

The most common causes are foaming due to the use of the wrong lubricant or overfilling, broken gaskets, damaged oil seals, a loose drain plug or a cracked transmission case.

AUTOMATIC TRANSMISSION TROUBLESHOOTING

Most automatic transmission repairs require considerable specialized knowledge and tools. It is impractical for the home mechanic to invest in the tools, since they cost more than a properly rebuilt transmission.

Keep the linkage properly adjusted (Chapter Nine) and check the fluid level and condition frequently (Chapter Three) to help prevent future problems. If the fluid is brown or black in color or has a burned or varnish-like smell, it indicates that there is some type of damage or failure inside the transmission. Have the transmission serviced by your dealer or a competent automatic transmission service facility.

DIFFERENTIAL TROUBLESHOOTING

Noise is usually the first thing to draw attention to differential problems. It is not always easy to diagnose the trouble by determining the source of the noise and the operating conditions that produce it. Defective universal joints, wheel bearings, muffler and/or tires may be wrongly diagnosed as differential or axle problems.

Some clue as to the cause of the trouble may be gained by noting whether the noise is a hum, growl or knock; whether it is produced when the vehicle is accelerating under load or coasting; and whether it is heard when the vehicle is going straight or making a turn.

Differential service procedures are covered in Chapter Eleven.

Noise During Acceleration

This can result from insufficient lubricant, incorrect tooth contact between the drive gear and drive pinion, damaged or misadjusted bearings in axles or side bearings, a worn differential cross shaft or damaged gears.

Noise During Coasting

This can be caused by incorrect backlash between the drive gear and drive pinion gear, or from an incorrect adjustment of the drive pinion bearing.

Noise During A Turn

This is generally caused by loose or worn axle shaft bearings, pinion gears that are too tight on their shafts, a side gear jammed in the differential case or worn side gear and pinion thrust washers.

Driveline "Clunk" When Shifting From Forward Into Reverse, or Reverse Into Forward

This noise is usually caused by an idle speed that is too high or insufficient lubrication. Other possible causes include loose engine mounts, excessive backlash in the axle or transmission, defective shock absorbers or loose rear springs and loose or worn drive shaft components.

Other Noises

A humming noise in the differential is often caused by improper drive pinion or ring gear adjustment which prevents normal tooth contact between the gears. If ignored, rapid tooth wear will occur and the noise will become more like a growl. This should be corrected as soon as the noise is heard to prevent damage to the gears.

Tire noise varies considerably, depending upon the type of road surface and type of tread pattern. Differential noises will sound the same, regardless of road surfaces. If noises are heard, carefully listen to them over different road surfaces to help isolate the problem.

Broken Differential Parts

Insufficient lubrication, improper use of the clutch, excessive load, misadjusted bearings or gears, excessive backlash, loose bolts and case damage can all result in differential damage.

BRAKE SYSTEM TROUBLESHOOTING

Good brakes are vital to the safe operation of any vehicle. Perform the maintenance specified in Chapter Three to minimize brake system problems. Brake system service is covered in Chapter Thirteen.

Brake Pedal Goes To The Floor

Worn linings or pads, air in the hydraulic system, a leaking master or wheel cylinder, or a leaking brake line or hose can cause this problem. Check for leaks. Check for worn brake linings or pads. Bleed and adjust the brakes. Rebuild a leaking master or wheel cylinder.

Spongy Brake Pedal

This problem is generally caused by air in the hydraulic system. Bleed and adjust the brakes.

Brakes Pull

Check brake adjustment and lining/pad wear. Check for contaminated linings/pads, leaking wheel cylinders and loose brake lines or hoses. Check front end alignment and look for suspension damage such as a broken front/rear spring or shock absorber. Check tire condition and pressure.

Brakes Squeal or Chatter

Check brake lining/pad thickness and brake drum/disc condition. Make sure that shoes are not loose. Clean off any dirt on shoes and drums. Disc brake squealing is more difficult to eliminate. Check to make sure that the anti-squeal or anti-rattle springs are properly installed and in good condition.

As a last resort, use one of the aerosol sprays sold to minimize disc brake squeal.

Brakes Drag

Check brake adjustment, including the parking brake. Look for broken or weak shoe return springs an swollen rubber parts caused by contaminated or improper brake fluid. Check for a defective master cylinder.

Hard Pedal

Check for contaminated brake linings/pads. Check for brake line/hose restrictions.

High Speed Fade

Check for distorted or out-of-round drums/discs and contaminated linings/pads.

Pulsating Pedal

Check for distorted or out-of-round drums/discs with a dial indicator. If the drum/disc condition appears normal according to the dial indicator but the condition persists, have a light cut taken from the drums/discs by a dealer or machine shop.

This problem often occurs when the vehicle was equipped with organic brake linings/pads by the factory, but semi-metallic linings/pads are installed as replacements. The drums/discs furnished with organic pads do not have the ability to resist the high heat levels created by semi-metallic linings/pads and will often warp just enough to cause the problem, yet provide no tell-tale signs of overheating or distortion.

COOLING SYSTEM TROUBLESHOOTING

Cooling system service is provided in Chapter Seven.

Engine Overheats

An overheating condition may be caused by insufficient coolant, use of plain water instead of water mixed with anti-freeze, a loose or defective drive belt, a defective thermostat or water pump, incorrect ignition timing and/or clogged, defective or loose coolant hoses.

Engine Does Not Warm Up

This condition generally results from a defective thermostat or extremely cold weather.

Coolant Loss

Radiator leaks, loose or defective coolant hoses, a defective radiator cap or water pump, a cylinder head gasket leak or a cracked cylinder head/engine block can cause this problem.

Noisy Cooling System

Cooling system noise is generally caused by defective water pump bearings, loose or bent fan blades, or a defective drive belt.

CLYMER QUICK TIP

Visually inspect metal radiator tanks periodically for traces of a greenish-gold appearance. This looks like a harmless fungus that has eaten through the radiator paint but will not wipe off. Called "mildew" or "solder bloom," it is caused by a chemical reaction between the solder used to construct the tank and the antifreeze. Once it appears, there is no way to stop it and the radiator will eventually have to be replaced.

STEERING AND SUSPENSION TROUBLESHOOTING

Steering and suspension system checks, adjustments and service are covered in Chapter Ten (2-wheel drive) or Chapter Twelve (4-wheel drive).

Problems in the suspension or steering are evident when any of the following occur:

a. Hard steering.
b. Vehicle pulls to one side.
c. Vehicle wanders or front wheels wobble.
d. Excessive play in steering.
e. Abnormal tire wear.

Unusual steering, pulling or wandering is usually caused by bent or misaligned suspension parts. If the problem seems to be excessive play, check wheel bearing adjustment first. Next, check the

steering free play and ball-joints. Finally shake each wheel to check tie rod ends.

Tire Wear Analysis

Abnormal tire wear should always be analyzed to determine the cause. The most common is incorrect tire pressure, followed by improper driving, overloading, loose wheel bearings and incorrect wheel alignment. **Figure 20** identifies wear patterns and their most probable cause.

Wheel Balancing

All 4 wheels and tires must be in balance along 2 axes. To be in static balance (**Figure 21**), weight must be evenly distributed around the axis of rotation. (A) shows a statically unbalanced wheel. (B) shows the result—wheel tramp or hopping. (C) shows proper static balance.

To be in dynamic balance (**Figure 22**), the centerline of weight must coincide with the centerline of the wheel. (A) shows a dynamically unbalanced wheel. (B) shows the result—wheel wobble or shimmy. (C) shows the proper dynamic balance.

If wheel imbalance is indicated immediately after the vehicle has been subjected to hard, rough or off-road use, check the balance weights on both sides of each wheel. If any balance weights are missing, have the wheel rebalanced as soon as possible.

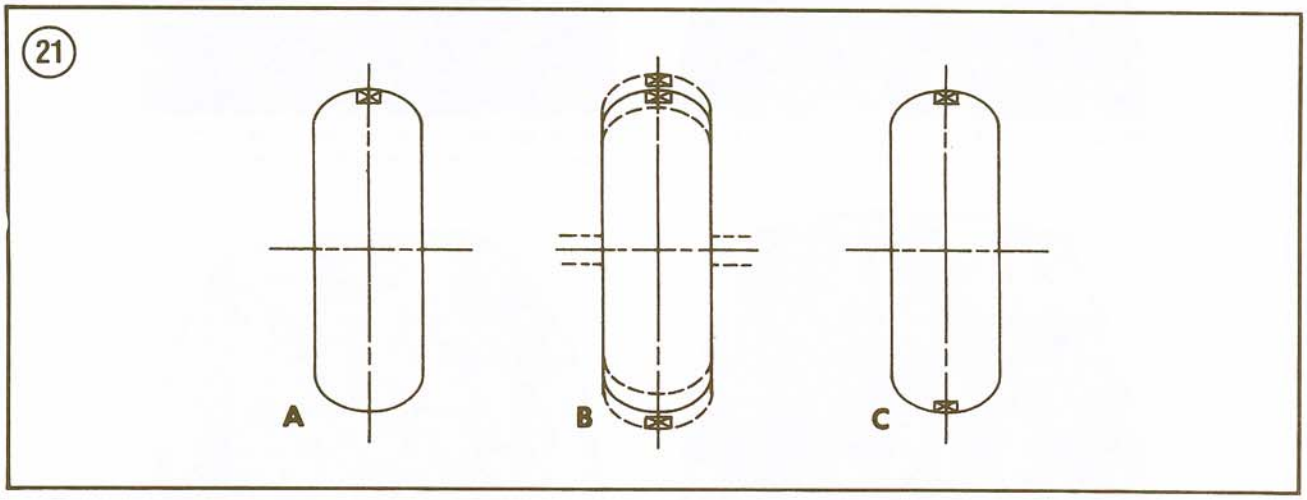

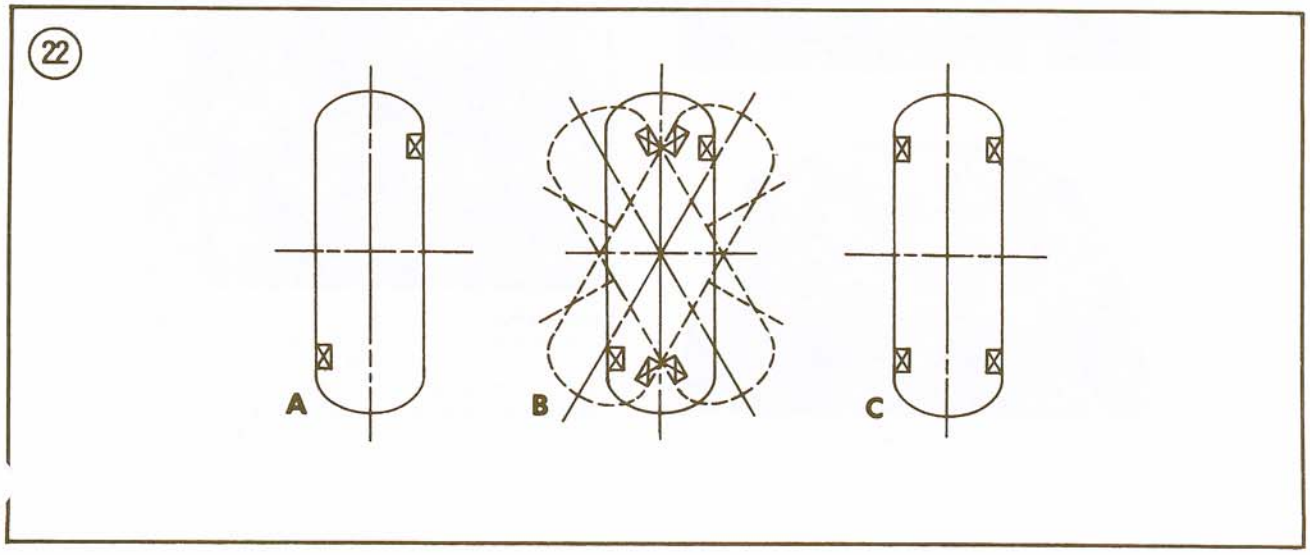

(20)



Underinflation–Worn more on sides than in center.

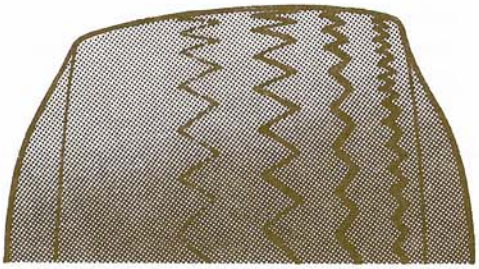

Wheel Alignment–Worn more on one side than the other. Edges of tread feathered.



Road Abrasion–Rough wear on entire tire or in patches.



Overinflation–Worn more in center than on sides.

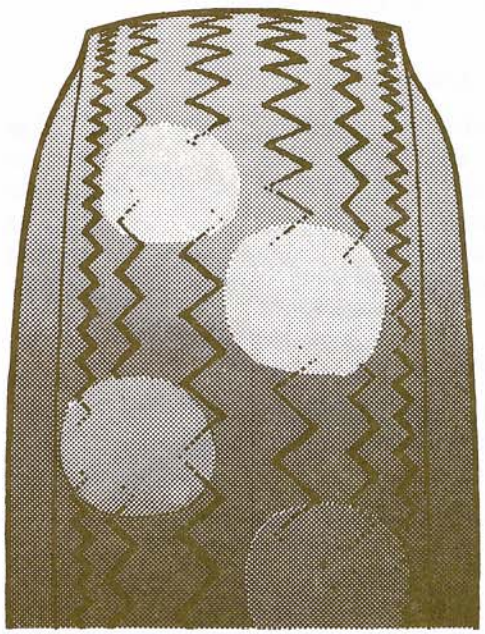

Wheel Balance – Scalloped edges indicate wheel wobble or tramp due to wheel unbalance.



Combination–Most tires exhibit a combination of the above. This tire was overinflated (center worn) and the toe-in was incorrect (feathering). The driver cornered hard at high speed (feathering, rounded shoulders) and braked rapidly (worn spots). The scaly roughness indicates a rough road surface.

CHAPTER THREE

LUBRICATION, MAINTENANCE AND TUNE-UP

A careful program of lubrication, preventive maintenance and regular tune-ups will result in longer engine and vehicle life, ensuring good performance, dependability and safety. It will also pay dividends in fewer and less expensive repair bills. Such a program is especially important if the vehicle is used in remote areas, off-highway or on heavily traveled freeways where breakdowns are not only inconvenient but dangerous. Breakdowns are much less likely to occur if the vehicle has been well maintained.

This chapter deals with the normal maintenance necessary to keep your Ranger or Bronco II running properly. **Tables 1-4** list the maintenance intervals for vehicles given normal use.

Vehicles driven under severe conditions require more frequent maintenance. This is also specified in **Tables 1-4**. Such conditions include:

a. Frequent short trips.
b. Stop-and-go driving.
c. Extremely cold weather.
d. Trailer towing.
e. Dusty or off-road conditions.

Certain maintenance tasks and checks should be performed weekly. Othes should be performed at certain time or mileage intervals. Still others should be done whenever certain symptoms appear. Some maintenance procedures are included in the *Tune-up* section at the end of the chapter. Detailed instructions will be found there. Other steps are described in the following chapters. Chapter references are included with these steps.

Scheduled maintenance requirements are provided in **Table 1** (gasoline) and **Tables 2-4** (diesel). Oil viscosity recommendations are given in **Table 5** (gasoline) and **Table 6** (diesel), with recommended lubricants found in **Table 7** and approximate refill capacities in **Table 8**. Drive belt tension specifications are given in **Table 9**. **Tables 1-9** are at the end of the chapter.

HOISTING, JACKING AND LIFT POINTS

Suspension and steering design requires that special precautions be taken when raising the

vehicle with a jack or a hoist and when positioning jackstands. Incorrect jack or jackstand placement can cause suspension, steering linkage and/or drive train damage. **Figure 1** shows the front and rear jacking points for 2-wheel drive vehicles. **Figure 2** shows the front and rear jacking points for 4-wheel drive vehicles.

A special bracket is provided on the front axle of 2-wheel drive vehicles for use with the service jack supplied. This bracket should only be used with the service jack or a jack whose end cap will fit into the bracket as shown in **Figure 1**.

WARNING

If an incorrect jack is used with the jacking bracket, it may slip off the bracket during jacking and cause vehicle damage or personal injury.

When raising the front of 2-wheel drive vehicles, jacks and jackstands should be positioned under the center of the lower suspension arms or spring supports as close to the wheels as possible. See **Figure 1**. To raise the front of 4-wheel drive vehicles, position the jack under the shock absorber bracket as shown in **Figure 2**.

If raising the rear of the vehicle, position jacks and jackstands under the spring mounting pads or rear axle housing. See **Figure 1** or **Figure 2**. Be sure the jack or jackstand does not interfere with shock absorber or stabilizer bar mounting brackets.

When lifting one wheel of the vehicle, as when changing a tire, dismantling a hub or removing a brake drum, make sure the vehicle is resting as level as possible and firmly block the wheels at the opposite end of the vehicle. Set the parking brake and place the transmission in PARK (automatic transmission) or REVERSE (manual transmission). Position the jack carefully to provide maximum contact under axles or spring hangers. The jack should be as close as possible to the wheel being raised and positioned exactly vertical.

Raise the jack until it just begins to support the axle. Loosen all wheel lug nuts about 1/4 turn. Continue to raise the jack slowly until the wheel just clears the ground and will rotate freely.

Unscrew the lug nuts and remove the wheel. When reinstalling the wheel, tighten the lug nuts securely, lower the vehicle to the ground and remove the jack, then tighten all of the lug nuts to specifications.

When lifting the entire front of the vehicle, block the rear wheels, set the parking brake and place the transmission in PARK or REVERSE. Fit the head of the jack under the engine oil pan with a block of wood placed between the jack head and oil pan. If the vehicle weight is to be taken off the suspension, place the jack at the center of the front frame crossmember. Make sure the jack does not lift against or contact any sheet metal, suspension or steering components or the bottom of the radiator. Check to see that it does not touch electrical leads, hydraulic lines or oil/fuel lines.

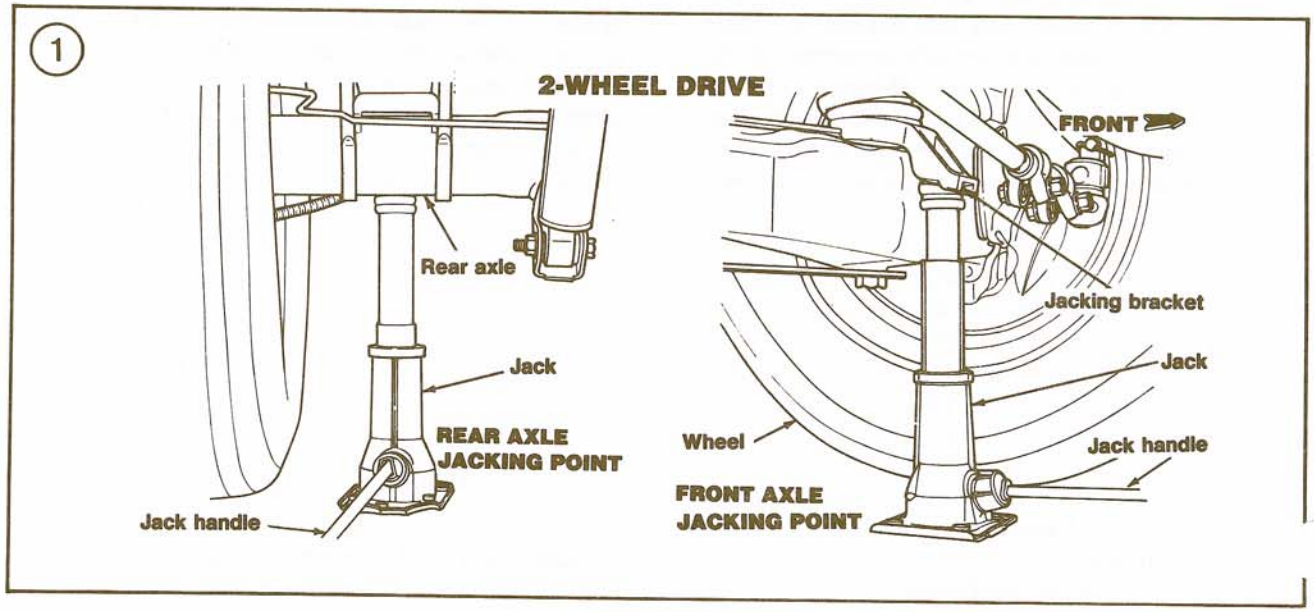

When lifting the entire rear of the vehicle, block the front wheels and apply the head of the jack to the differential. After the vehicle has been lifted with the jack, support it on jackstands located under the frame rails or the rear axle. Do *not* run the engine when the rear wheels are jacked up if the vehicle is equipped with a Traction-Lok or limited-slip differential.

WARNING

Never work beneath the vehicle when it is supported only by a jack.

TOWING

CAUTION

Tow a vehicle only as described in this chapter and with a minimal load. Improper towing techniques can result in serious transmission damage.

As a general rule, the vehicles covered in this manual should be towed with their rear wheels off the ground. If the rear wheels cannot be raised, either disconnect the drive shaft or tow the vehicle with the aid of a dolly.

If the vehicle is towed with its front wheels on the ground, clamp the steering wheel in a straight-ahead position with a wheel clamping device designed for towing. Do *not* rely upon the steering column lock.

If the vehicle is towed with the front wheels off the ground, do not exceed speeds of 35 mph or distances of 50 miles unless the rear drive shaft is disconnected. Vehicles towed with the rear wheels off the ground should not exceed 35 mph (rough pavement) or 50 mph (smooth pavement).

WEEKLY CHECKS

Many of the following checks were once routinely made by service station attendants during a fuel stop. With the advent of the self-service station and the extra cost for "full service," you may want to perform the checks yourself. Although simple to perform, they are important, as such checks give an indication of the need for other maintenance. Typical engine compartment component location is provided in **Figure 3** (carburetted 4-cylinder engine), **Figure 4**, (2.3L EFI engine), **Figure 5** (diesel engine), **Figure 6** (2.8L V6) or **Figure 7** (2.9L V6).

Engine Oil Level

Engine oil should be checked before the vehicle is started each day. At this time, all the oil is in the crankcase and the dipstick will give a true reading. If you find it necessary to check the oil after the engine has been started, let the vehicle sit for an hour to allow oil in the upper part of the engine to drain back into the crankcase.

To check engine oil level, remove the dipstick and wipe it clean with a cloth or paper towel. Reinsert the dipstick in the tube until it seats firmly. Wait a moment, then remove it again and read the oil level on the end of the dipstick. Reinsert the dipstick after taking the reading. Make sure to push the dipstick all the way down. This is especially important with the diesel engine, as the crankcase is pressurized and can blow oil through the dipstick tube if the neoprene seal on the dipstick cap is not properly seated.

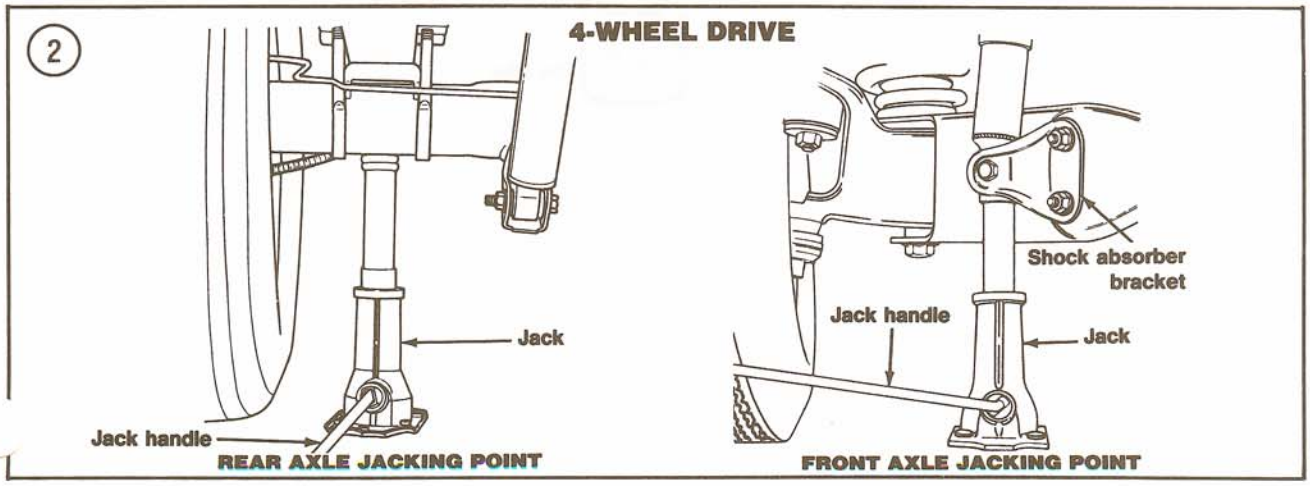

3

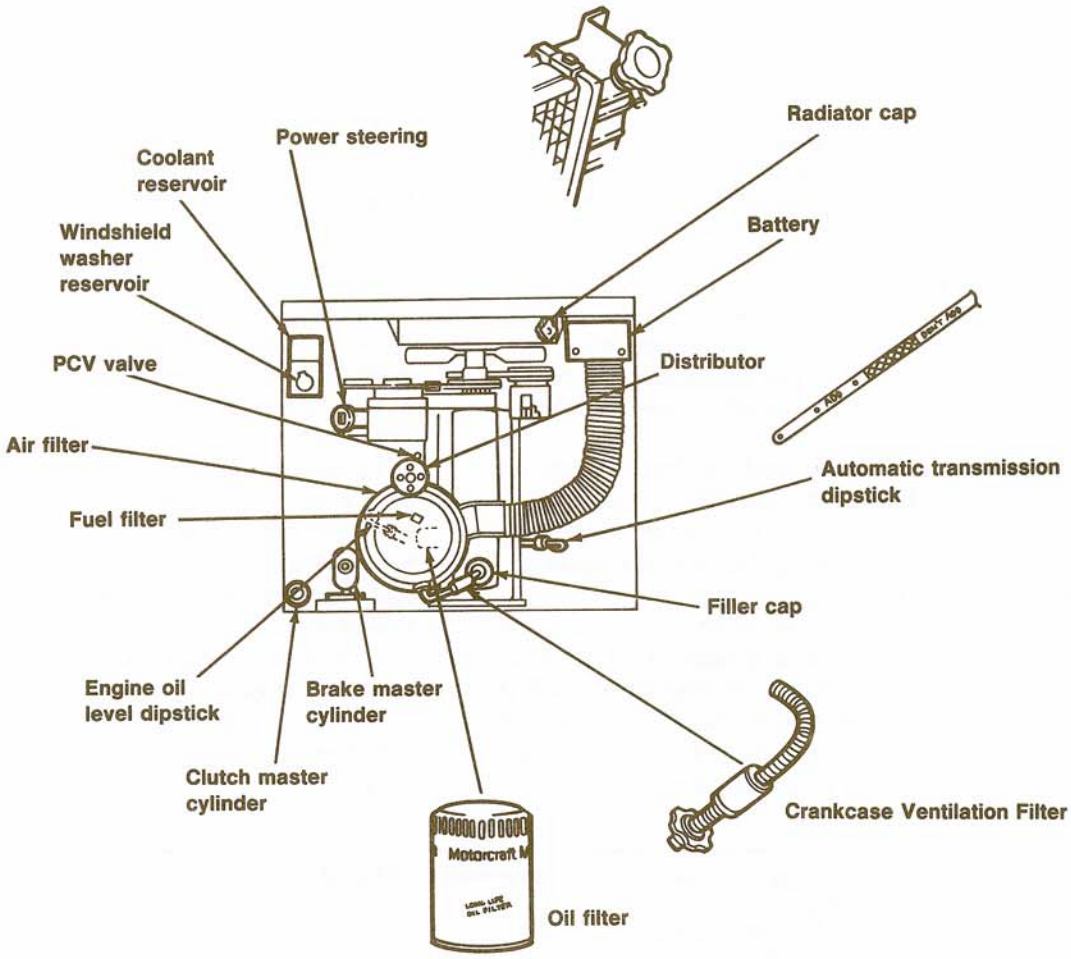
Radiator cap
Power steering
Coolant reservoir
Windshield washer reservoir
Battery
PCV valve
Distributor
Air filter
Automatic transmission dipstick
Fuel filter
Filler cap
Engine oil level dipstick
Brake master cylinder
Clutch master cylinder
Crankcase Ventilation Filter
Motorcraft
Oil filter

4 **LUBRICATION POINTS (2.3L EFI ENGINE)**

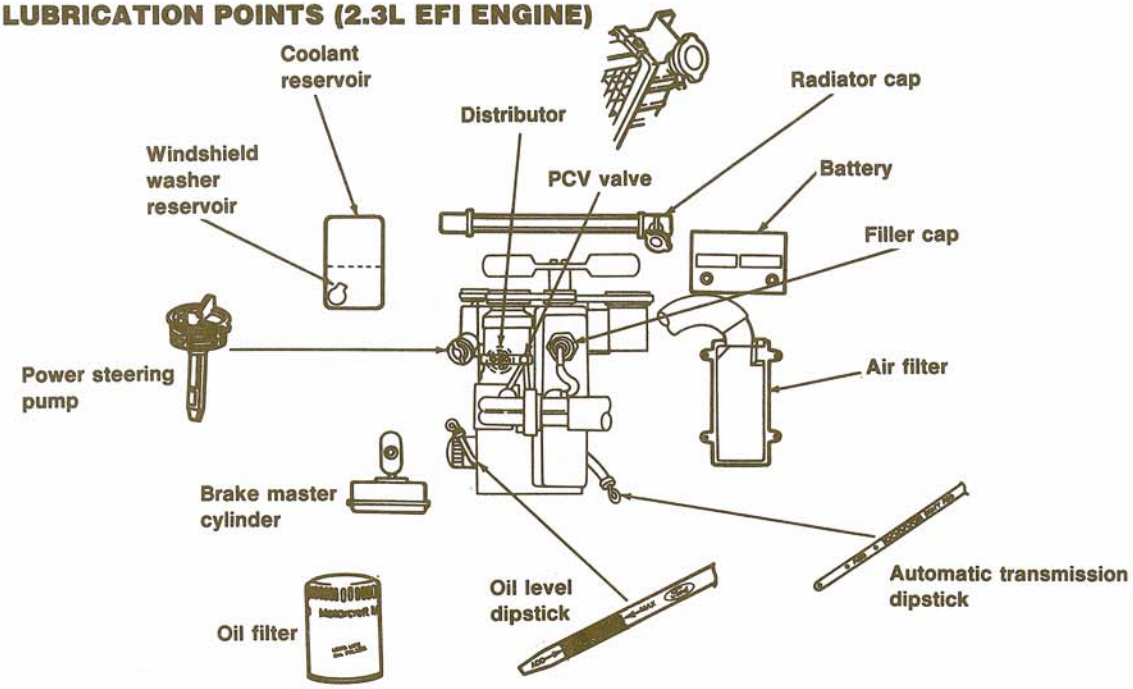

5 **LUBRICATION POINTS (2.3L TURBO DIESEL ENGINE)**

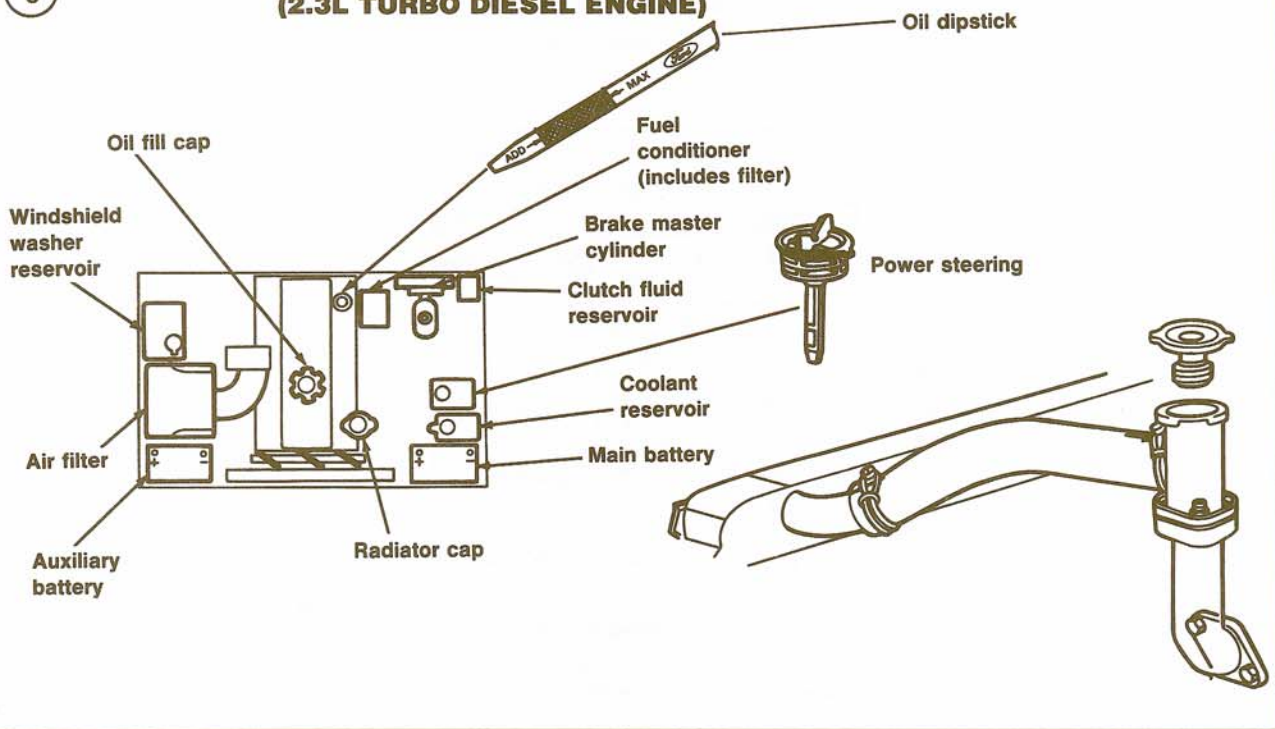

6

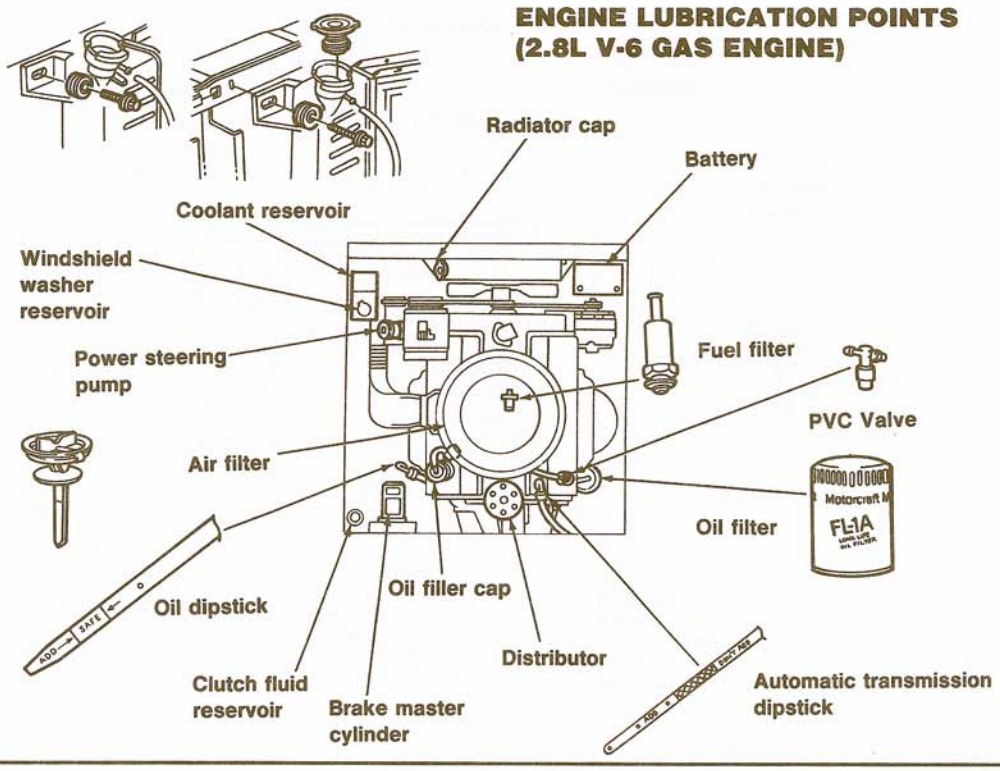
ENGINE LUBRICATION POINTS
(2.8L V-6 GAS ENGINE)
Radiator cap
Battery
Coolant reservoir
Windshield washer reservoir
Power steering pump
Fuel filter
PVC Valve
Air filter
Oil filter
Oil dipstick
Oil filler cap
Distributor
Clutch fluid reservoir
Brake master cylinder
Automatic transmission dipstick

7

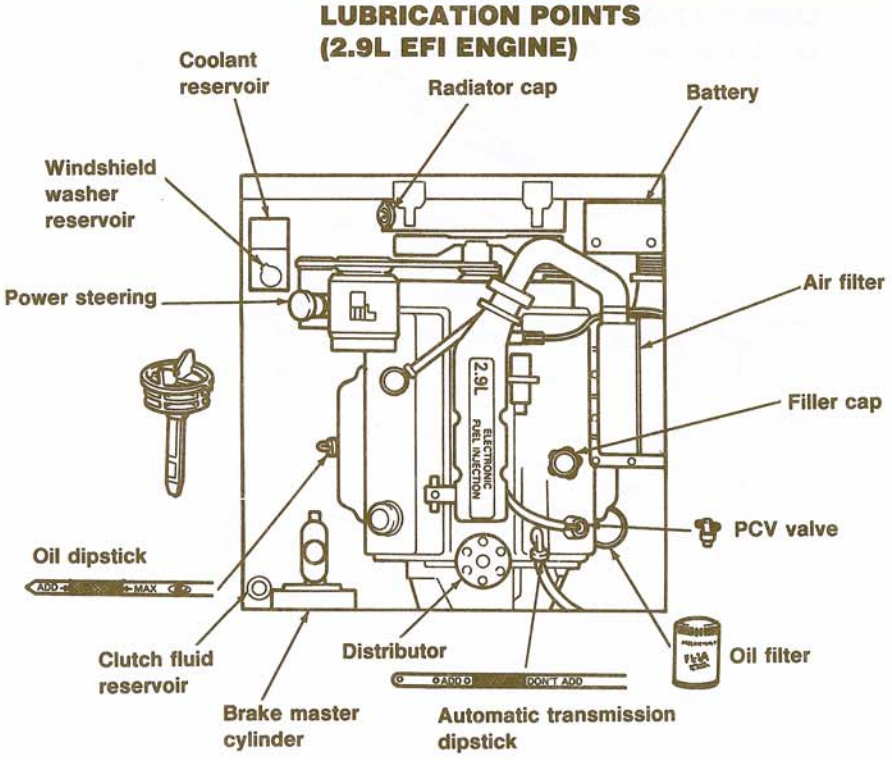
LUBRICATION POINTS
(2.9L EFI ENGINE)
Coolant reservoir
Radiator cap
Battery
Windshield washer reservoir
Power steering
Air filter
Filler cap
PCV valve
Oil dipstick
Clutch fluid reservoir
Distributor
Oil filter
Brake master cylinder
Automatic transmission dipstick

8

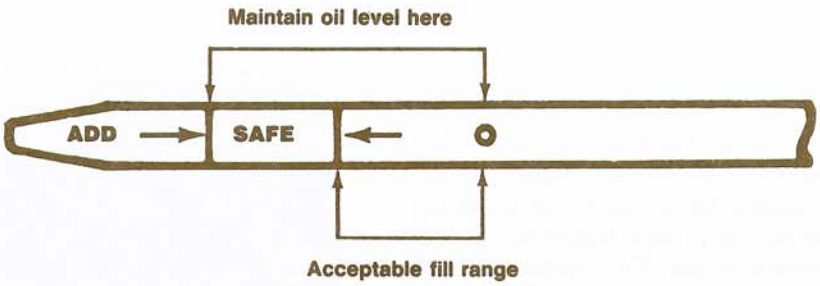

9

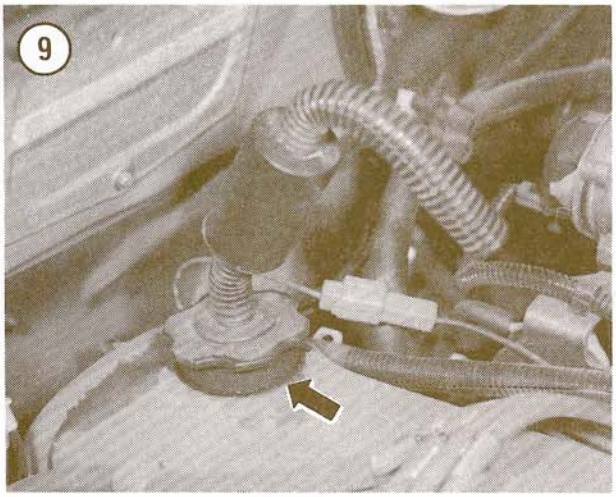

10

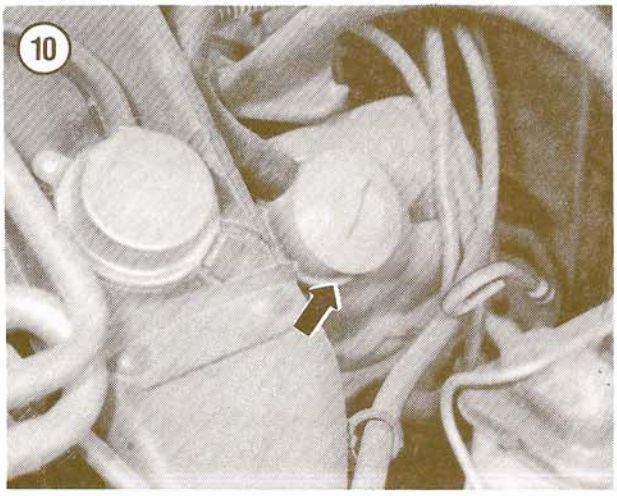

11

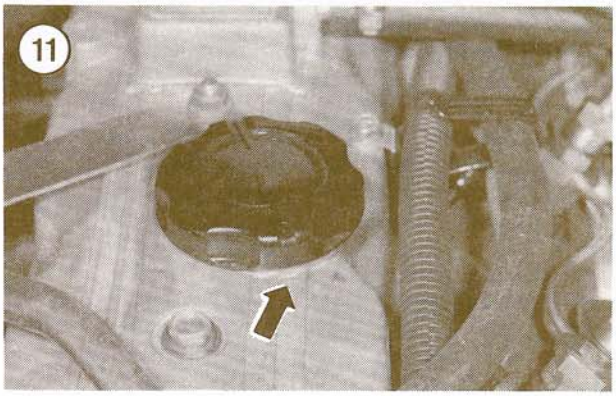

The oil dipstick has been recalibrated on some engines to eliminate the possibility of incorrectly reading the dipstick due to varying vehicle ride angles. A small circle added to the dipstick (**Figure 8**) indicates the *maximum* oil fill limit. Any oil level between the circle and the upper "SAFE" limit should be considered acceptable. If the oil level is above the circle, drain the oil until the level is at or slightly below the circle. Do *not* overfill the engine. Too much oil can be as harmful to the engine as too little and may result in a front or rear seal leak.

Top up to the proper level on the dipstick, if necessary. Use *only* an SF-rated oil for gasoline engines. Top up diesel engines with an SF/CD rated oil. See **Table 5** (gasoline) or **Table 6** (diesel) for proper oil viscosity. Add oil through the hole in the valve cover. See **Figure 9** (4-cylinder gasoline), **Figure 10** (V6) or **Figure 11** (diesel).

Coolant Level and Condition

NOTE

The coolant recovery tank and windshield washer reservoir are combined in a common housing on gasoline engine models. While a common housing is used, the fluids are kept separated by a divider inside the housing.

Check coolant level in the recovery tank. See **Figure 12** for gasoline engines and **Figure 13** for diesel engines. It should be at the lower mark on the tank when the engine is cold and at the upper mark when the engine is hot. Top up as required with a recommended coolant (**Table 7**). If the reservoir tank is empty, check the radiator level as well.

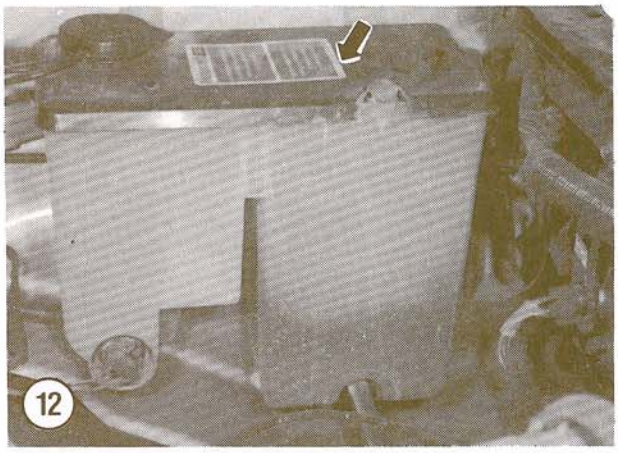

WARNING

Do not remove the radiator cap when the engine is warm or hot. If this is unavoidable, cover the cap with a thick rag or wear heavy leather gloves. Slowly turn the cap counterclockwise against the first stop (about 1/4 turn). Let all pressure (hot coolant and steam) escape. Then depress the cap and rotate counterclockwise to remove. If the cap is removed too soon, scalding coolant may escape and cause a serious burn.

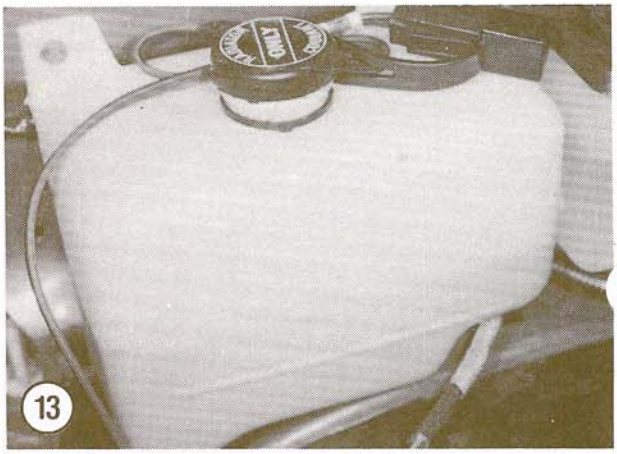

The coolant level should be maintained 1 1/2-4 in. below the filler neck in crossflow radiators. See **Figure 14**.

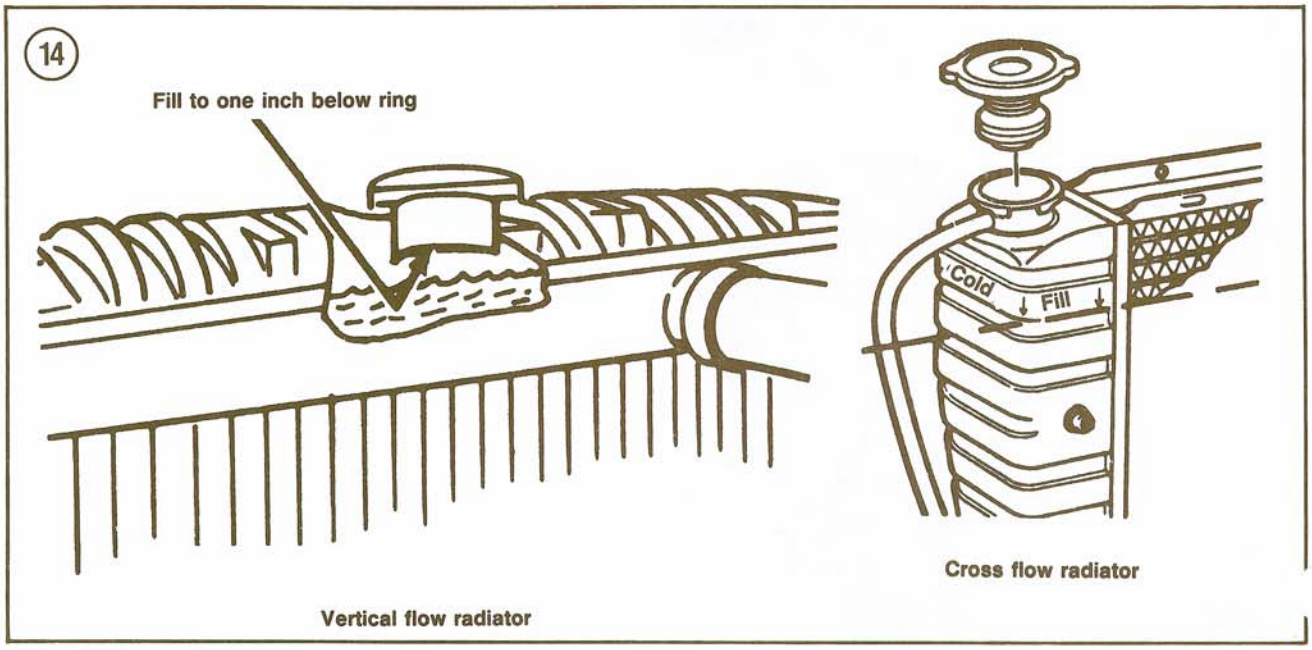

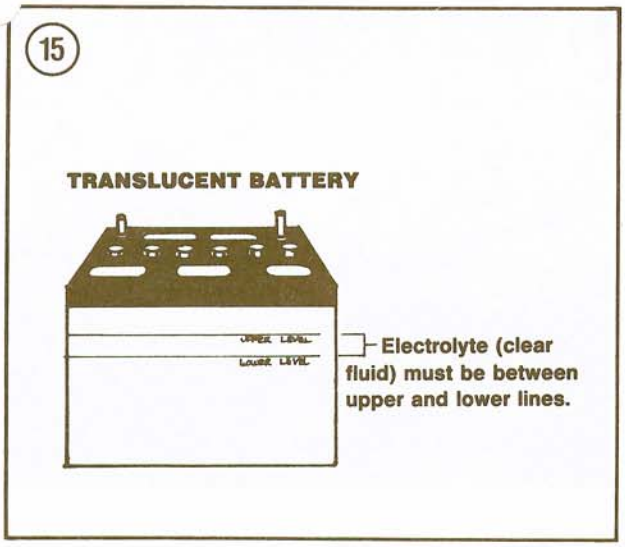

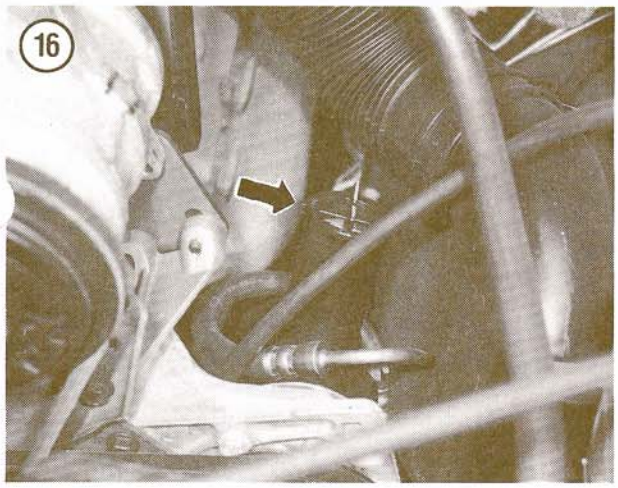

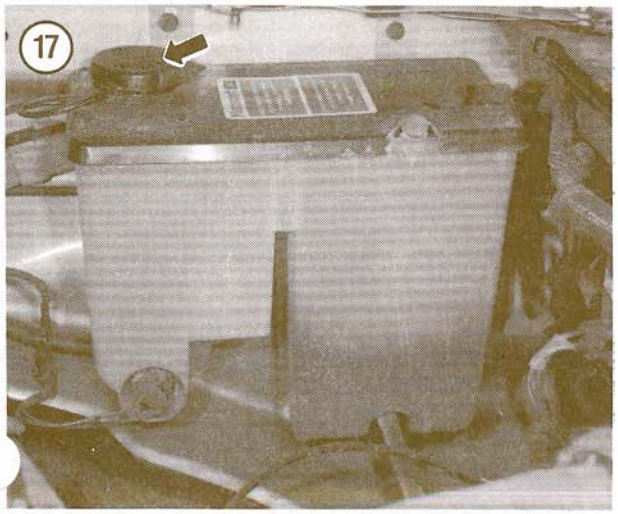

NOTE

The coolant level in crossflow radiators cannot be checked with the engine running. Check the level when the engine is cold.

Check the condition of the coolant. If it is dirty or rusty, drain the radiator and flush the cooling system; then refill it with fresh coolant as described in Chapter Seven.

Battery Electolyte Level

Unsealed batteries have individual cell vent caps or a bar with vented plugs which fits across 3 cells. To check battery electrolyte level with this type of battery, remove the vent caps or vent bars and observe the liquid level. With translucent batteries, it should be between the marks on the outside of the battery case (**Figure 15**). On black batteries, it should be even with the bottom of the filler weils. See **Figure 16**.

If the electrolyte level is not correct, add distilled water until the level is satisfactory. Do not overfill, as this will result in loss of electrolyte and shorten the battery life. Carefully wipe any spilled water from the battery top before reinstalling the vent caps or bars.

Periodic electrolyte level checks are not required on sealed maintenance-free batteries.

Windshield Wipers and Washers

Check the wiper blades for breaks or cracks in the rubber. Blade replacement intervals will vary with age, the weather, amount of use and the degree of chemical reaction from road salt or tar.

Operate the windshield washer and wiper blades. At the same time, check the amount and direction of the sprayed fluid. If the blades do not clean the windshield satisfactorily, wash the windshield and the blades with a mild undiluted detergent. Rinse with water while rubbing with a clean cloth or paper towels.

If the wiper pattern is uneven and streaks over clean glass, replace the blades.

CAUTION

Do not use radiator antifreeze in the washer reservoir. The runoff may damage the vehicle's paint.

Check fluid level in the windshield washer reservoir. See **Figure 17** (gasoline) or **Figure 18** (diesel). It should be kept full, except during winter

months when filling it only 3/4 full will allow for expansion if the fluid freezes. If necessary, fill the fluid reservoir with a mixture of water and Ford Ultra-clear windshield washer solvent or equivalent, following manufacturer's instructions. A mixture of ammonia and water works equally well.

Brake Fluid Level

Clean the master cylinder housing and cover (**Figure 19**) to remove any contamination that might get into the fluid when the cover is removed. Insert a screwdriver blade between the cap and wire retainer (**Figure 20**). Lift the retainer up and to one side out of the way. Remove the cap and gasket. Make sure the brake fluid in both sections is within 1/4 in. of the top. Top up, if necessary, with DOT 3 or DOT 4 brake fluid as specified in **Table 7**. Make sure the gasket is properly seated in the cap and reinstall the cap. Use the screwdriver blade to pry the wire retainer back in place over the cap until it snaps into the cover depressions.

CAUTION

Do not use fluid from a previously opened container that is only part full. Brake fluid absorbs moisture and this can result in reduced braking efficiency.

Clutch Master Cylinder Fluid Level

Check fluid level in the clutch master cylinder reservoir (**Figure 21**). Clean the top and sides of the

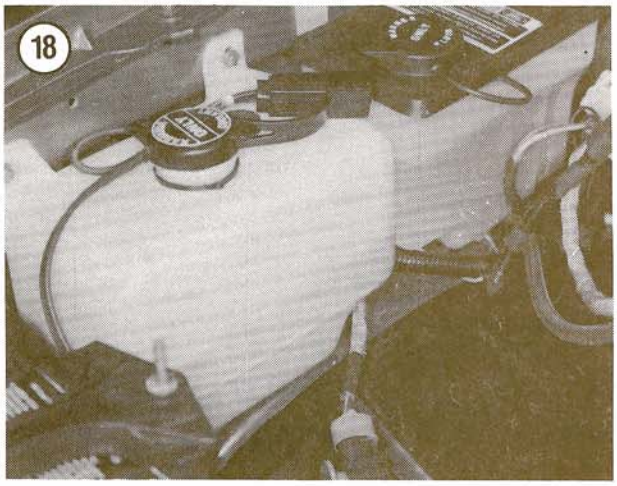

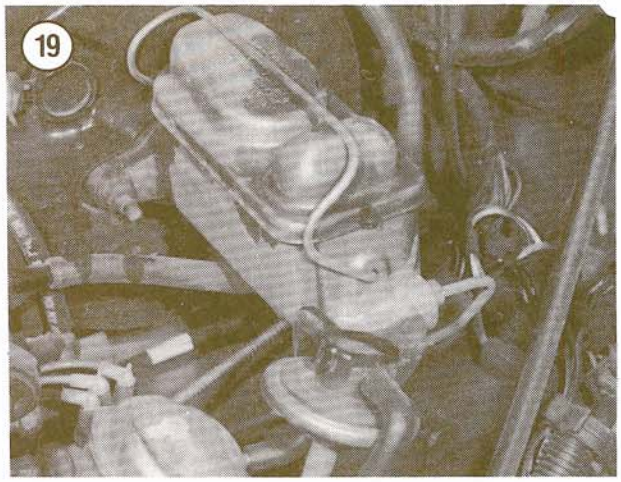

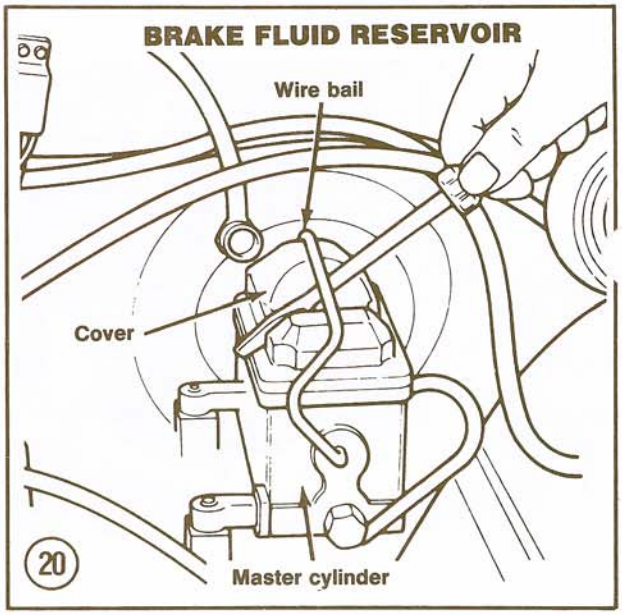

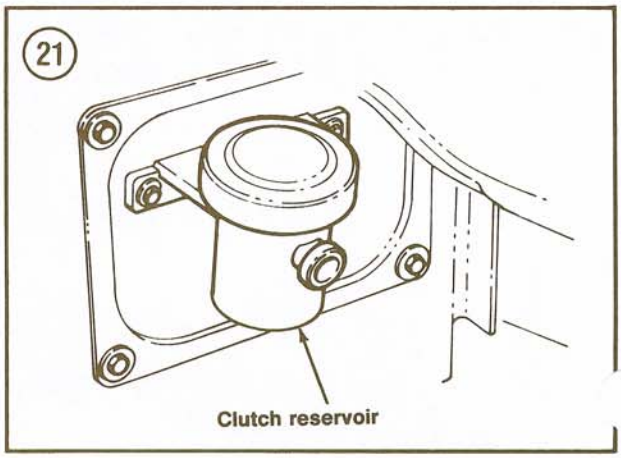

reservoir. If the fluid level cannot be seen through the translucent reservoir, remove the cap, rubber diaphragm and gasket. The fluid should be at the step in the wall of the cylinder. If necessary, top up with DOT 3 or DOT 4 brake fluid. Check the cylinder and tube connectors for leakage. Install the diaphragm and gasket. Make sure they are properly seated, then install the cap.

NOTE

Do not overfill. The upper part of the reservoir must be free to accept fluid displaced from the slave cylinder as clutch wear occurs.

Automatic Transmission Fluid Level

Check the automatic transmission fluid level, if so equipped. With the engine at normal operating temperature, set the parking brake and block the drive wheels. Move the selector lever from the PARK position through each gear range, pausing long enough for the transmission to engage. Return the lever to the PARK position. Remove the dipstick and wipe it clean with a lint-free cloth or paper towel. Reinsert the dipstick in the filler tube until it seats completely. Remove the dipstick and check the fluid level. It should be between the "ADD" and "FULL" marks. Top up, if necessary, with DEXRON II automatic transmission fluid. *Do not* overfill.

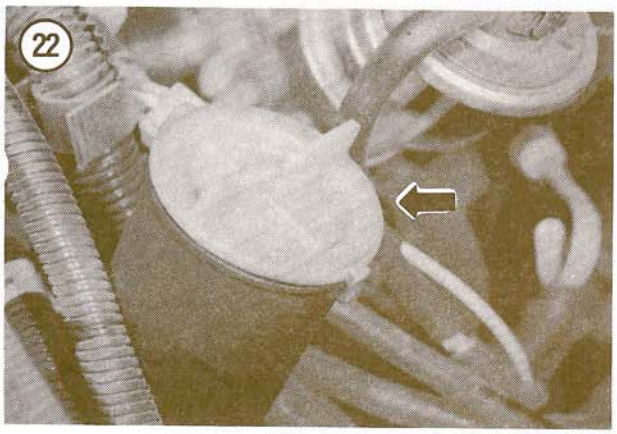

Power Steering Fluid Level

Check fluid level in the power steering pump reservoir, if so equipped. **Figure 22** shows the integral reservoir assembly; the 2.3L turbo diesel uses a remote reservoir attached to the fender well behind the coolant recovery tank on the driver's side of the vehicle.

With the engine at normal operating temperature (upper radiator hose hot), turn the steering wheel lock-to-lock several times, then shut the engine off and remove the power steering pump dipstick. Wipe the dipstick with a clean lintless cloth or paper towel and reinsert in the pump reservoir. Wait a moment and remove the dipstick a second time. The fluid should be between the "ADD" and "FULL" marks on the side of the dipstick marked "HOT." If the level is below the "ADD" mark on the dipstick, top up with Motorcraft Type F automatic transmission fluid or equivalent. Reinstall the dipstick.

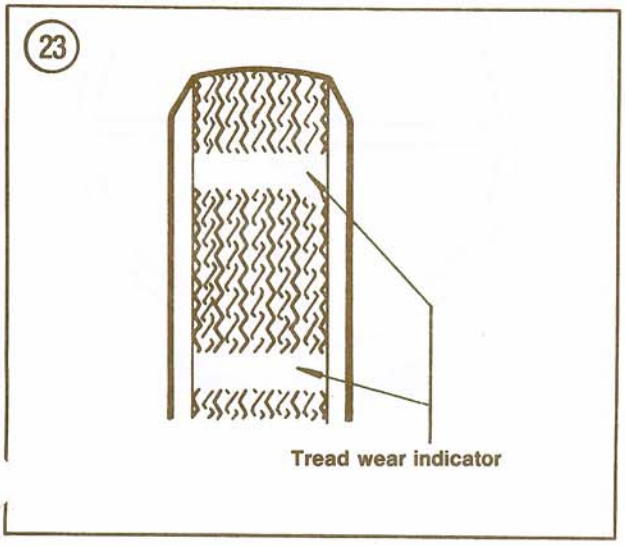

Tires and Wheels

Check tire pressure and condition. This should be done when the tires are cold in the morning or after the vehicle has been parked for at least 3 hours after being driven less than one mile. When the tires heat up from driving, the air inside them expands and gives false high pressure readings. See the decal affixed to the driver's door jamb for recommended tire pressures.

Original equipment tires (including temporary spare tires) have built-in tread wear indicators. When tire tread depth is 1/16 in. or less, the indicators appear as 1/2 in. wide bands (**Figure 23**). If the indicators can be seen in 2 or more adjacent grooves at 3 points around the tire, replace the tire.

Some models are equipped with a temporary use spare tire identified by the wording "TEMPORARY USE ONLY" molded into the tire sidewall. This spare is pre-inflated and ready for use. The correct inflation pressure for this tire appears on the spare wheel. Check the pressure in the spare tire every 2 weeks.

WARNING

When the high-pressure temporary spare furnished with the Bronco II is worn out, the tire and wheel must be replaced as an assembly. ***Do not*** *reuse the wheel.*

OWNER SAFETY CHECKS

The following simple checks should be performed on a daily basis during normal operation of the vehicle. Some are driveway checks. The others can be performed while driving. If any result in unsatisfactory operation, see your dealer to have the condition corrected.

Steering Column Lock

The ignition key should turn to LOCK position only when the transmission selector is in PARK (automatic transmission) or REVERSE (manual transmission).

Parking Brake and Transmission Park Mechanism

Check holding ability by setting the parking brake with the vehicle on a fairly steep hill. Check automatic transmission PARK mechanism by placing the transmission selector in PARK and releasing all brakes.

WARNING

You should not expect the PARK mechanism to hold the vehicle by itself even on a level surface. ***Always*** *set the parking brake after placing the transmission selector in PARK. When parking on an incline, you should also turn the wheels to the curb before shutting off the engine.*

Transmission Shift Indicator

Make sure the automatic transmission shift indicator accurately indicates the gear position selected.

Starter Safety Switch

The starter should operate only in PARK or NEUTRAL positions (automatic transmission) or in NEUTRAL with the clutch fully depressed (1985-on manual transmission).

Steering

With the vehicle on level ground, and with the front wheels lined up straight ahead, grasp the steering wheel and turn it from right to left and check for rotation free play. The free play should not be greater than about one inch (**Figure 24**). If it is, the front wheel bearings should be checked for condition and adjustment (see Chapter Ten or Chapter Twelve) and the ball-joints, steering linkage and steering arm should be checked as possible causes of excessive play. These checks should be referred to a dealer.

Try to move the steering wheel in and out and check for axial play. If any play is felt, check the tightness of the steering wheel nut.

Attempt to move the steering wheel from side to side without turning it. Movement is an indication of loose steering column mounting bolts or wor column bushings. Check and tighten the mounting bolts if necessary, and if the movement is still present, take the vehicle to a dealer or front end specialist for corrective service.

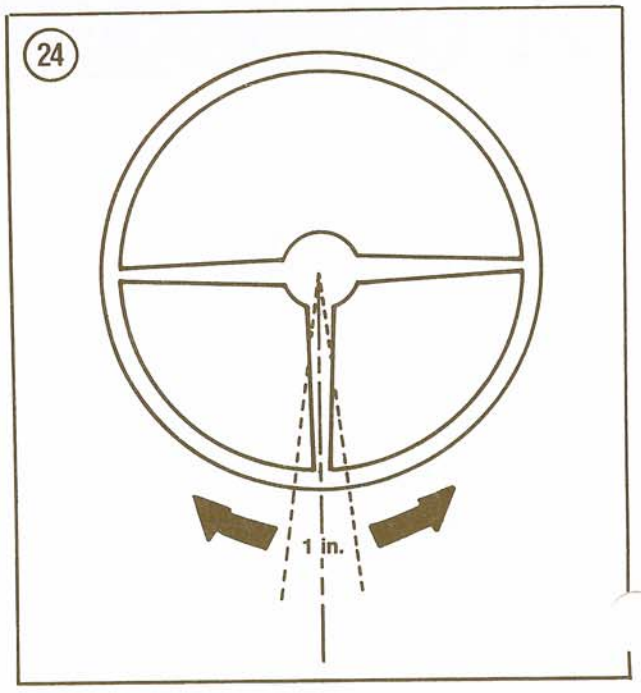

Wheel Alignment and Balance

Wheel alignment and balance should be checked periodically by a dealer or an alignment specialist. Visually check the tires for abnormal wear. If the vehicle pulls either to the right or left on a straight, level road, an alignment problem is indicated. Excessive vibration of the steering wheel or front of the vehicle while driving at normal highway speeds usually indicates the need for wheel balancing.

Brakes

Observe brake warning light (if so equipped) during braking action. Also check for changes in braking action, such as pulling to one side, unusual sounds or increased brake pedal travel. If the brake pedal feels spongy, there is probably air in the hydraulic system. Bleed the brakes (Chapter Thirteen).

Exhaust System

Be alert to any smell of fumes in the vehicle or to any change in the sound of the exhaust system that might indicate leakage.

Defroster

Turn on the heater, then move the control to defrost (DEF) and check the amount of air directed to the windshield.

Rear View Mirror and Sun Visors

Make sure that the friction mounts are adjusted so that mirrors and visors stay in selected positions.

Horn

Check the horn to make sure that it works properly.

Lap and Shoulder Belts

Check all components for proper operation. Make sure that the anchor bolts are tight. Check the belts for fraying.

Head Restraints

If the seats are equipped with head restraints, check to see that they will adjust up and down properly and that no components are missing, loose or damaged.

Lights and Buzzers

Verify that all interior lights and buzzers are working. These include seat belt reminder light and buzzer, ignition key buzzer, interior lights, instrument panel illumination and warning lights.

Check all exterior lights for proper operation. These include the headlights, license plate lights, side marker lights, parking lights, turn or directional signals, backup lights and hazard warning lights.

Glass

Check for any condition that could obscure vision or be a safety hazard. Correct as required.

Door and Tailgate Latches

Verify positive closing, latching and locking action.

Fluid Leaks

Check under the vehicle after it has been parked for awhile for evidence of fuel, coolant or oil leaks. Water dripping from the air conditioner drain tube after use is normal. Immediately determine and correct the cause of any leaking gasoline fumes or liquids to avoid possible fire or explosion.

Tires and Wheels

Inspect the tire tread and sidewall condition. Wear patterns are a good indicator of chassis and suspension alignment. If detected early, alignment problems can be corrected before the tires have worn severely.

Checking tire condition is particularly important following hard off-highway usage. Look for nails, cuts, excessive wear or other damage. Remove all stones or other objects wedged in the tread. Pay particular attention to signs of severe rock damage.

This is usually found in the form of fractures and cuts in the tread and sidewalls. This type of damage presents an extreme driving hazard when the vehicle is operated at highway speeds. A damaged tire should be replaced as soon as possible.

WARNING

For satisfactory operation, all 4 wheels must be equipped with the same size tires, of equal circumference and identical or near identical tread pattern. In addition, bias-ply and radial tires should not be mixed; mixing will result in severe and even hazardous handling problems. Damage to the drive train components may also result.

Check the tire valve for air leaks; replace valve if necessary. Replace any missing valve caps. Check the tire pressures. This should be done when the tires are cold or after the vehicle has been parked for at least 3 hours after being driven less than one mile. When the tires heat up from driving, the air inside them expands and gives false high pressure readings.

NOTE

If tire pressure must be checked when the tires are warm, it will be about 3 psi higher following a low-speed drive and about 7 psi higher following a high-speed drive.

Use a reliable pressure gauge and adjust air pressure to agree with that specified for the tires. Pressure specifications for tires furnished with the vehicle are found on the Vehicle Safety Standard Certification Label attached to the driver's door lock pillar.

NOTE

Because of the variety of tire types and makes used on the vehicles covered in this manual, it is impractical to print all possible tire pressure ranges. When buying tires other than original equipment sizes, check with the manufacturer for recommended pressures. In all cases, never exceed the maximum pressure embossed on the side of the tire.

SCHEDULED MAINTENANCE (GASOLINE AND DIESEL ENGINES)

The maintenance services and intervals provided in **Tables 1-4** are a compilation and simplification of the manufacturer's schedules designed to offer maximum protection. If you follow the appropriate schedule for your vehicle, it will receive periodic maintenance that will meet or exceed all Ford Motor Company requirements.

Engine Oil and Filter

Engine oil should be selected to meet the demands of the temperatures and driving conditions anticipated. Ford Motor Co. recommends the use of an oil with the letter designation of SF for all gasoline engines. Designation SF/CD is required for diesel engines. This designation is clearly marked on the top of the oil can. See **Figure 25**.

If the vehicle is given normal use, change the oil at the intervals stated in **Tables 1-4**. If it is used in dusty areas or for frequent short trips, stop-and-go driving or in extremely cold weather, change the oil and filter in both gasoline and 2.2L diesel engines every 3,000 miles or 3 months. Change the 2.2L diesel engine bypass oil filter at alternate oil changes. Change the oil in 2.3L turbo diesel engines every 2,000 miles or 2 months and the filter every 4,000 miles or 4 months.

To drain the oil and change the filter, you will need:

a. Drain pan (8 quarts or more capacity).
b. Oil can spout or can opener and funnel.



OIL IDENTIFICATION SYMBOL

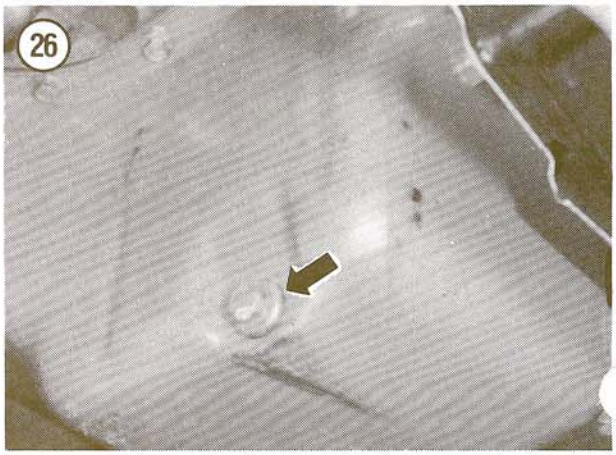

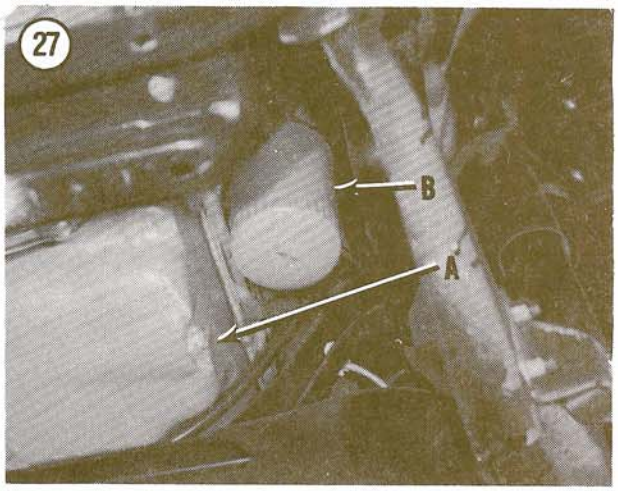

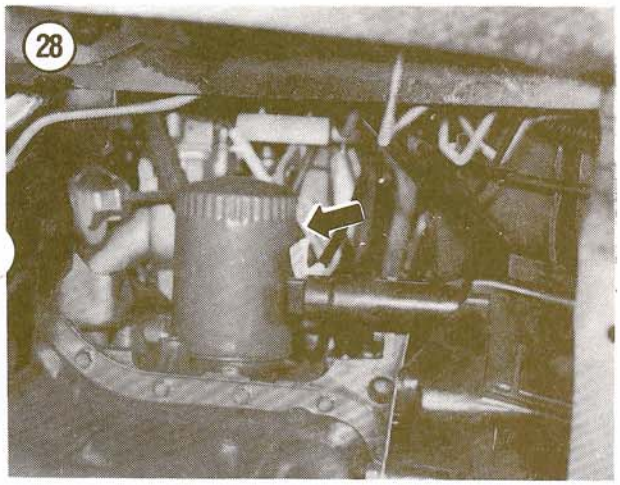

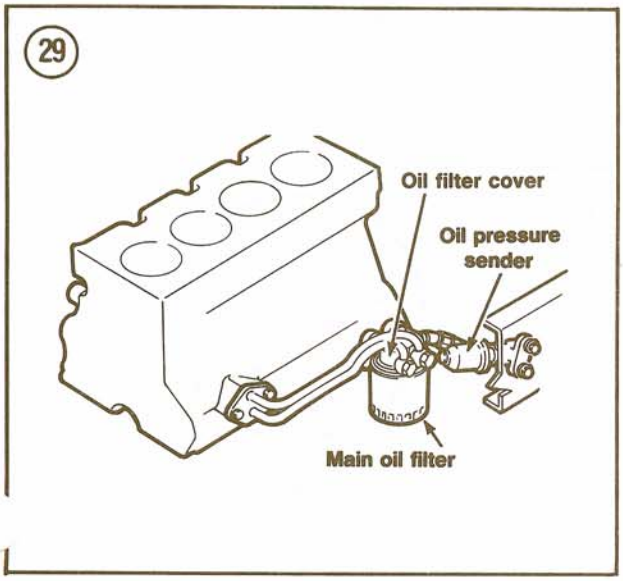

c. Filter wrench.
d. Appropriate type and quantity of new oil.
e. Adjustable wrench.
f. New oil filter(s).

There are several ways to discard the old oil safely. The easiest way is to pour it from the drain pan into a gallon bleach or milk container. The oil can than be taken to a service station for recycling.

NOTE

Check local regulations before disposing of oil in your household trash. Never allow oil to drain onto the ground.

The drain pan can be cleaned with solvent and paint thinner, if available. If not, hot water and dishwashing liquid will work.

1. Warm the engine to operating temperature, then shut it off.
2. With the vehicle parked on level ground, place the drain pan under the crankcase drain plug. See **Figure 26** (typical 4-cylinder) or A, **Figure 27** (V6). Remove the plug with the wrench and let the oil drain for at least 10 minutes. Check condition of the drain plug gasket and replace if damaged. Reinstall the plug and gasket. Tighten the 4-cylinder plug to 15-25 ft.-lb. (21-33 N•m), the V6 plug to 15-21 ft.-lb. (21-28 N•m) and the 2.3L turbo diesel plug to 44-57 ft.-lb. (59-78 N•m) (no torque specification is provided for the 2.2L diesel).
3. Move the drain pan beneath the oil filter. See **Figure 28** for 4-cylinder gasoline engines and B, **Figure 27** for V6 engines. See **Figure 29** for the 2.2L diesel main oil filter. The 2.3L turbo diesel oil filter is located on the side of the block below the turbocharger unit. Unscrew the oil filter counterclockwise. Use a filter wrench if the filter is too tight or too hot to remove by hand.
4. Wipe the gasket surface on the engine block clean with a paper towel.
5. Coat the neoprene gasket on the new filter with clean engine oil.

NOTE

If a filter wrench is used in Step 6, the filter will probably be overtightened. Improper filter tightening can result in an oil leak.

6. Screw the filter onto the engine *by hand* until the gasket just touches the engine block. At this point, there will be a very slight resistance when turning the filter.

a. Tighten the filter on gasoline engines another 1/2 turn *by hand.*
b. Tighten the main oil filter on diesel engines another 3/4 turn *by hand.*

7. On 2.2L diesel engines, repeat Steps 3-6 to change the bypass oil filter, if required. Tighten the bypass oil filter an additional 1 1/4 turn with a filter wrench.
8. Remove the oil filler cap from the valve cover. See **Figures 3-7** as required.
9. Pour the new oil into the engine (**Figure 30**). Wipe up any spills on the valve cover with a clean cloth or paper towel.
10. Start the engine and let it idle. The instrument panel oil pressure light will remain on for a few seconds, then go out. If equipped with an oil pressure gauge, the needle will gradually move into a normal operating position.

CAUTION

Do not race the engine to make the oil pressure light go out or the pressure indicator needle move. It takes time for the oil to reach all parts of the engine and racing it could damage dry parts.

11. While the engine is running, check the area under and around the drain plug and oil filter(s) for leaks.
12. Turn the engine off. Let the oil settle for several minutes, then recheck the level on the dipstick. Add oil, if necessary, to bring the level up to the "SAFE" mark, but *do not* overfill. Make sure the dipstick is fully reinserted in the dipstick tube.

Wheel Lug Nut Torque

At the intervals specified in **Tables 1-4**, check lug nut torque and tighten as required to 85-115 ft.-lb. (115-156 N•m) following the sequence shown in **Figure 31**.

Idle Speed (4-cylinder Carburetted Engine Only)

Check the idle speed on carburetted gasoline engines as specified in **Table 1**. Adjust, if necessary, to the specifications shown on the Vehicle Emission Control Information (VECI) label in the engine compartment. See *Idle Speed Adjustment* in this chapter.

Drive Belts (4-cylinder)

Gasoline powered 4-cylinder vehicles use a V-ribbed poly belt to drive the water pump, alternator and power steering pump (if so equipped). A second V-ribbed poly belt is used to drive the air conditioning compressor, if so equipped. A separate 1/4 in. V-belt drives the air pump. **Figure 32** shows typical belt arrangement for vehicles without power steering; **Figure 33** shows belt arrangement with power steering.

Diesel power vehicles use a 1/4 in. V-belt to drive the water pump and alternator. A flat cogged

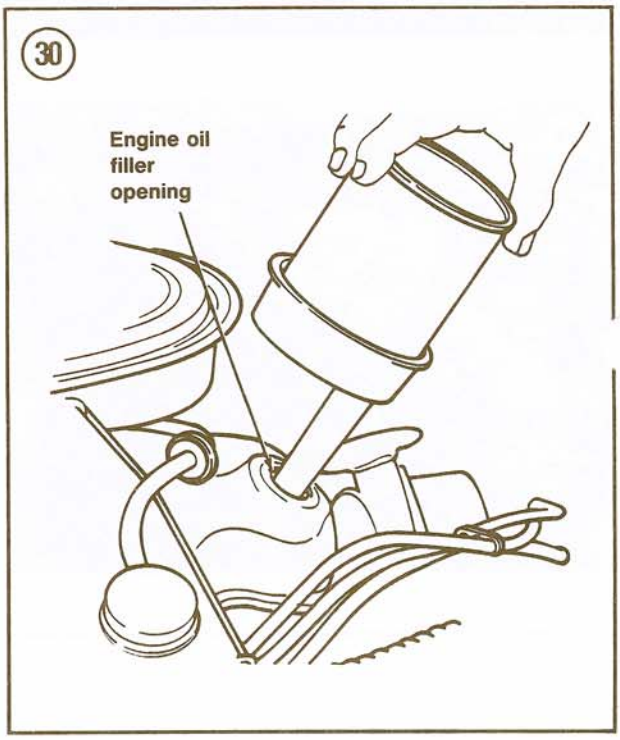

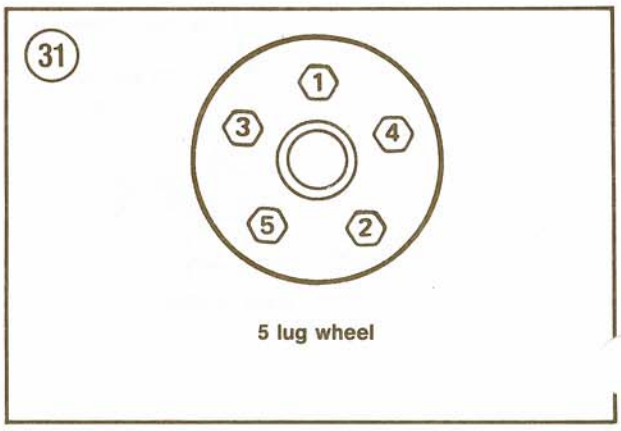

32

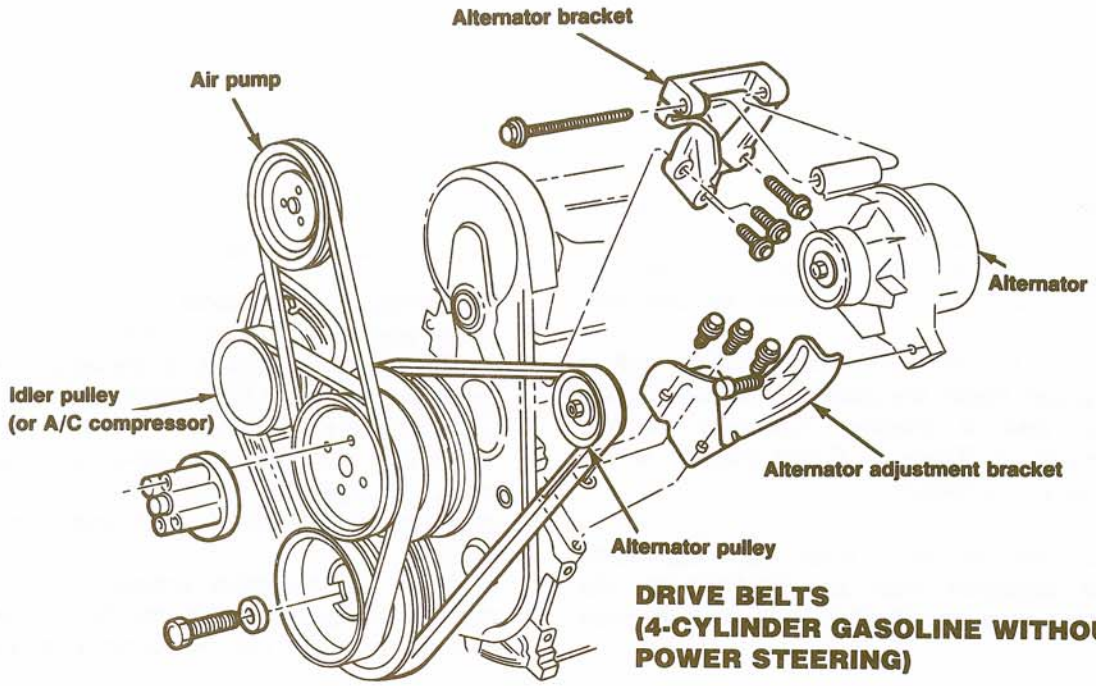

DRIVE BELTS (4-CYLINDER GASOLINE WITHOUT POWER STEERING)

33

DRIVE BELTS (4-CYLINDER GASOLINE WITH POWER STEERING)

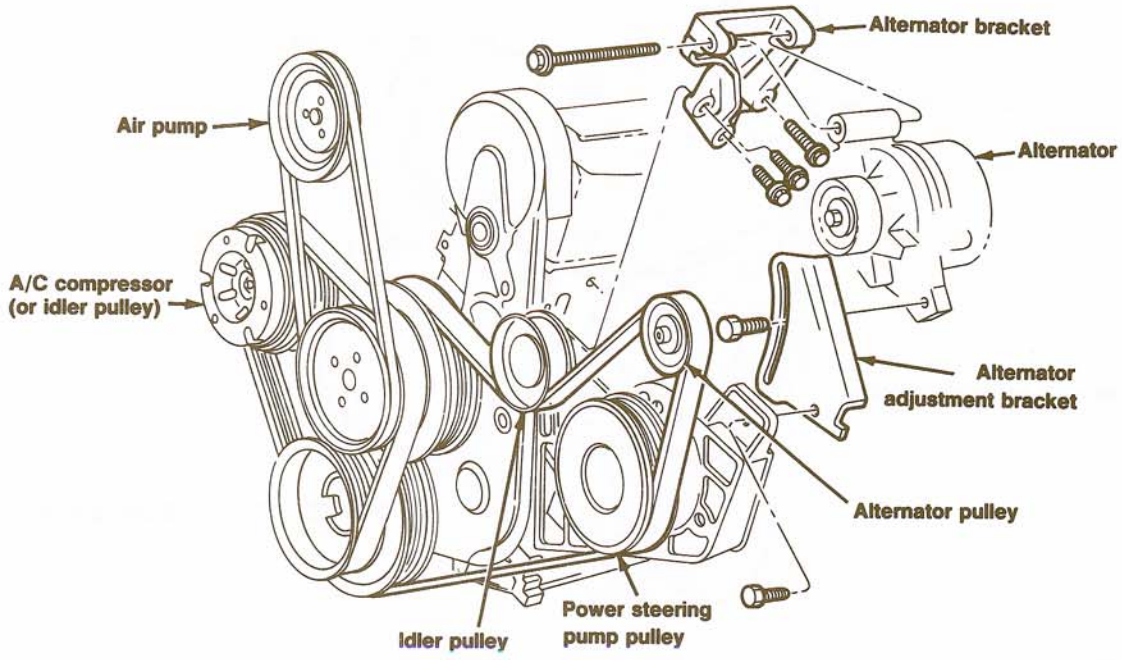

belt drives the vacuum pump on 2.2L diesels. All other accessories are driven by a V-ribbed poly belt. **Figure 34** (2.2L) and **Figure 35** (2.3L) show the diesel engine drive belt arrangement.

Ribbed poly belt tension must be checked with a belt tension gauge. V-belt tension can be checked by deflection if a tension gauge is not available.

To check V-belt tension by deflection, press downward firmly on the belt at a point midway between the 2 pulleys. The belt should deflect 1/8-1/4 in. (3.2-6.4 mm). If deflection is outside this range, adjust the belt tension as described below.

To check V-ribbed poly belt tension with a tension gauge, install the gauge on the belt (**Figure 36**) and take a reading. Compare to the specifications in **Table 9**. If the tension is not correct, adjust as follows:

1. Loosen the accessory pivot and adjustment bolts. If equipped with air conditioning, the compressor may use 2 pivot and 2 adjustment bolts.
2. Move the accessory toward or away from the engine as required.

CAUTION

Do not pry on the alternator, power steering pump or air pump to move the unit. Each has an adjustment ear cast into its case. A crescent wrench placed on this ear will provide sufficient leverage for adjustment. To move the air conditioning compressor, use a 1/2 in. breaker bar as shown in ***Figure 37****.*

3. Tighten the adjustment bolt(s), release pressure on the accessory unit, then tighten the pivot bolt(s).
4. Recheck belt tension. If necessary, repeat the procedure to obtain the correct tension.

To replace a drive belt;

1. Loosen the accessory pivot and adjustment bolts. If equipped with air conditioning, the compressor may use 2 pivbt and 2 adjustment bolts.
2. Move the accessory toward the engine until there is enough slack in the belt to permit its removal from the pulleys. Remove the belt.

34

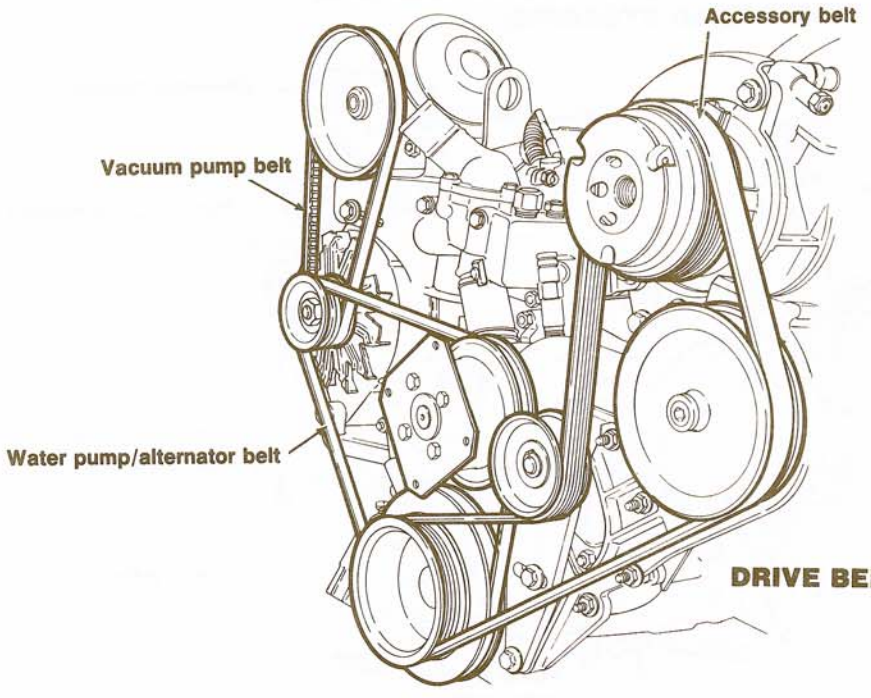

DRIVE BELTS (2.2L DIESEL)

35

BELT TENSION
(2.3L 1-4 DIESEL ENGINE)

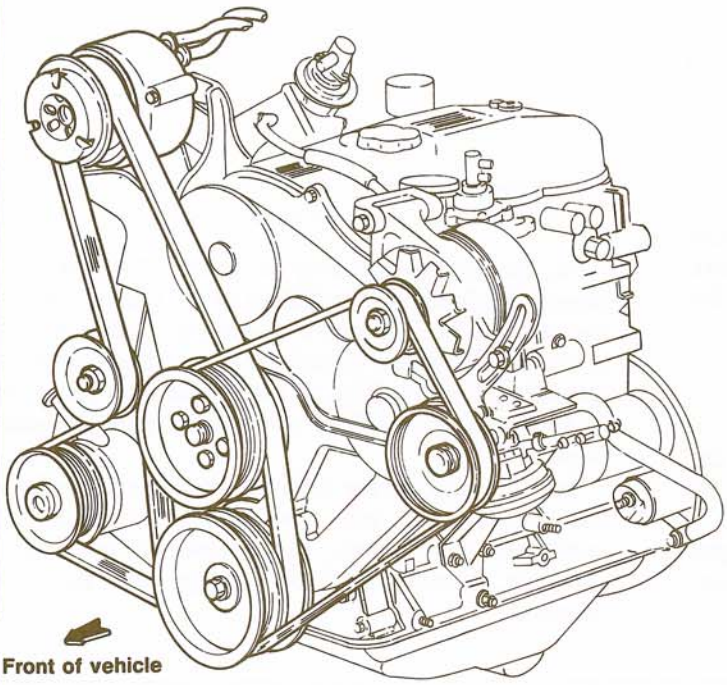

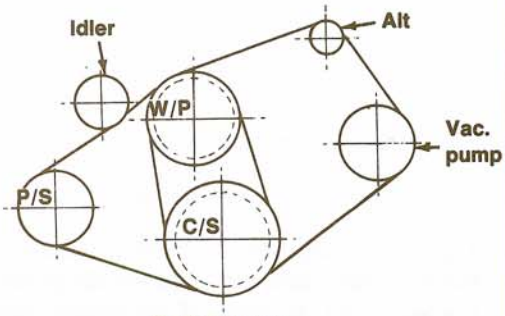

Belt diagram installation without A/C

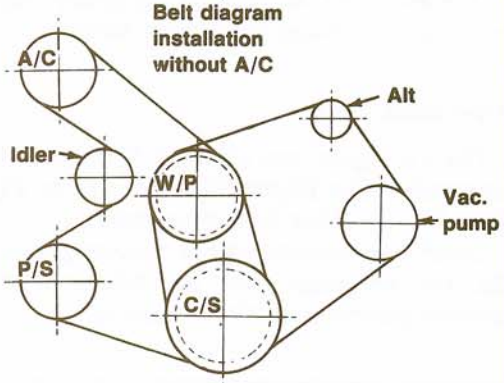

Belt diagram installation with A/C

36

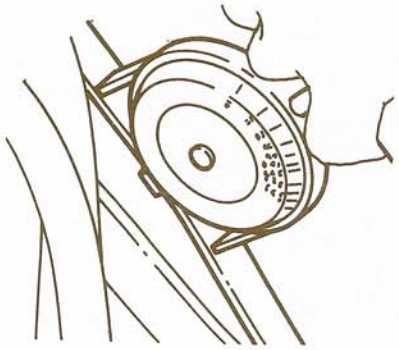

37

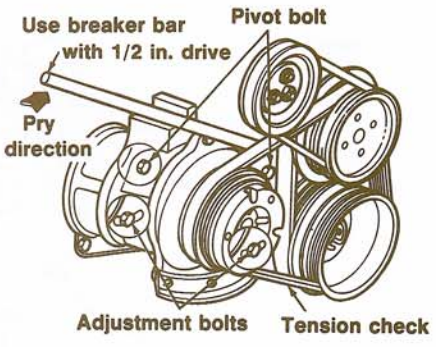

3. Install a new belt over the appropriate pulleys and pry the accessory away from the engine until the belt appears to be properly tensioned.

CAUTION

Do not pry on the alternator, power steering pump or air pump to move the unit. All three have an adjustment ear cast into their case. A crescent wrench placed on this ear will provide sufficient leverage for adjustment. To move the air conditioning compressor, use a 1/2 in. breaker bar as shown in ***Figure 37****.*

4. Tighten the adjustment bolt(s), release pressure on the accessory unit, then tighten the pivot bolt(s).
5. Recheck belt tension. If necessary, repeat the procedure to obtain the correct tension.

Drive Belts (V6)

The V6 engine uses standard V-belts to drive the accessories. See **Figure 38** (2.8L V6) or **Figure 39** (2.9L V6) for drive belt arrangement.

Check belt tension with a tension gauge (**Figure 36**). Fit the gauge over the belt at a midpoint between pulleys and take a reading.

The power steering belt tension is adjusted on some models by turning a bolt on the pump mounting bracket clockwise to tighten or counterclockwise to loosen belt tension as required. The other drive belts are adjusted or replaced as described for 4-cylinder engines.

Cooling System

WARNING

Personal injury is possible. Perform cooling system service when the engine is cold.

At the intervals shown in **Tables 1-4**, visually inspect the level and condition of the coolant in the reservoir tank. Top up, if necessary, with a 50/50 mixture of ethylene glycol antifreeze and water. If the coolant looks dirty or rusty, flush the radiator and replace the coolant as described in Chapter Seven.

Inspect all radiator and heater hoses. Replace any hoses that are cracked, deteriorated or extremely soft/spongy. Make sure all hoses are correctly installed and all clamps are securely fastened.

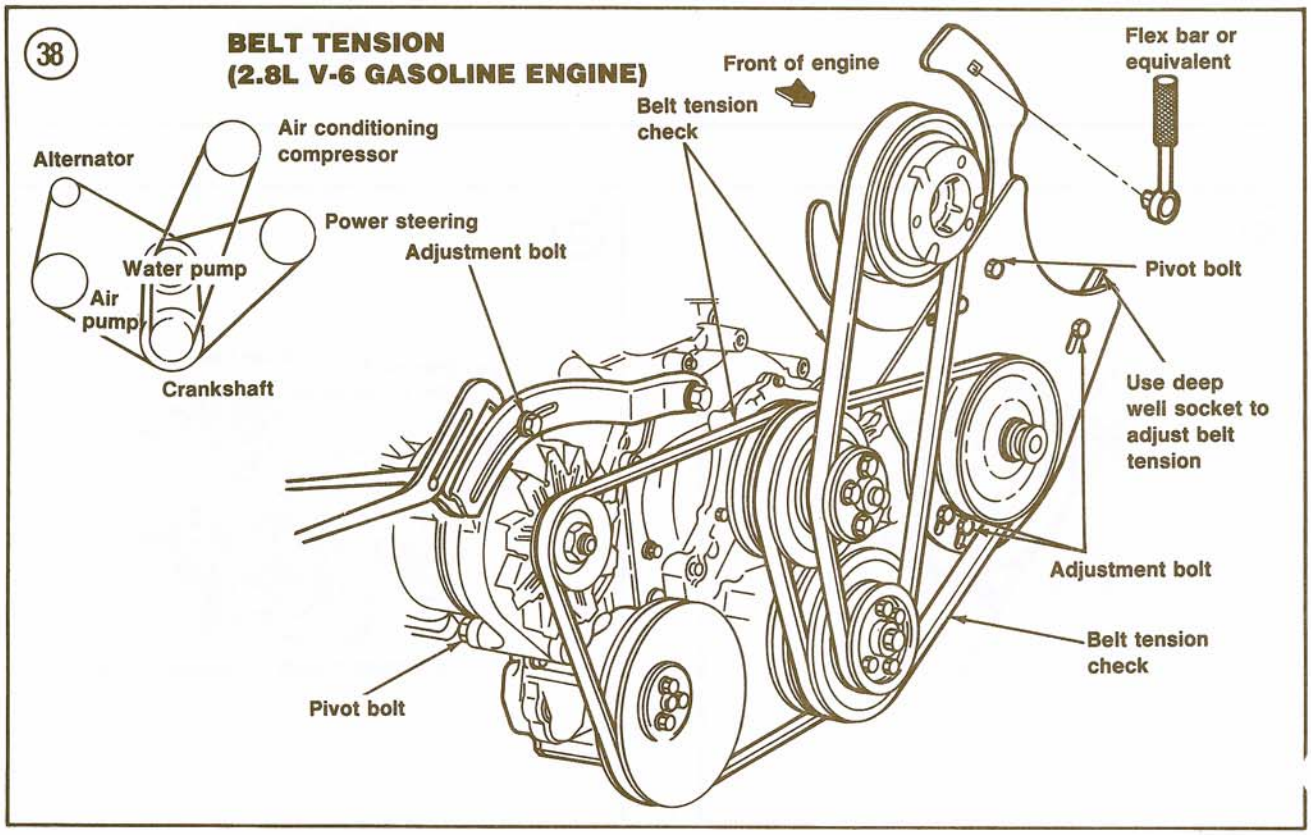

Drain, flush and refill the cooling system at specified intervals. Check cooling system hoses and clamps at this time. See Chapter Seven.

Automatic Transmission Fluid

Under normal driving conditions, the automatic transmission fluid does not require changing. However, if the vehicle has been driven under severe service conditions, such as those stated in **Tables 1-4**, drain and refill the fluid as follows:

1. Set the parking brake and place the transmission in PARK.
2. Raise the vehicle with a jack and place it on jackstands.
3. Place a suitable drain pan under the transmission.
4. Loosen all pan attaching bolts a few turns. Tap one corner of the pan with a rubber hammer to break it loose and let the fluid drain.
5. When the fluid has drained to the level of the pan flange, remove the pan bolts at the rear and along both sides of the pan. This will let the pan drop at one end and continue draining slowly.
6. When all fluid has drained, remove the pan and let the strainer/filter screen drain.
7. Discard the pan gasket. Clean the pan thoroughly with solvent and lint-free cloths or paper towels.
8. Remove the strainer/screen attaching bolt. Pull the strainer/screen from the valve body.
9. Remove and discard the grommet on the strainer/screen. Clean the strainer/screen thoroughly in solvent and dry with compressed air. If extremely dirty, discard and install a new one.
10. Install a new grommet on the strainer/screen. Install the strainer/screen to the valve body and tighten the attaching bolt as follows:
    a. C5 transmission—25-40 in.-lb. (2.8-4.5 N•m).
    b. C3 and A4LD transmission—71-97 in.-lb. (8-11 N•m)

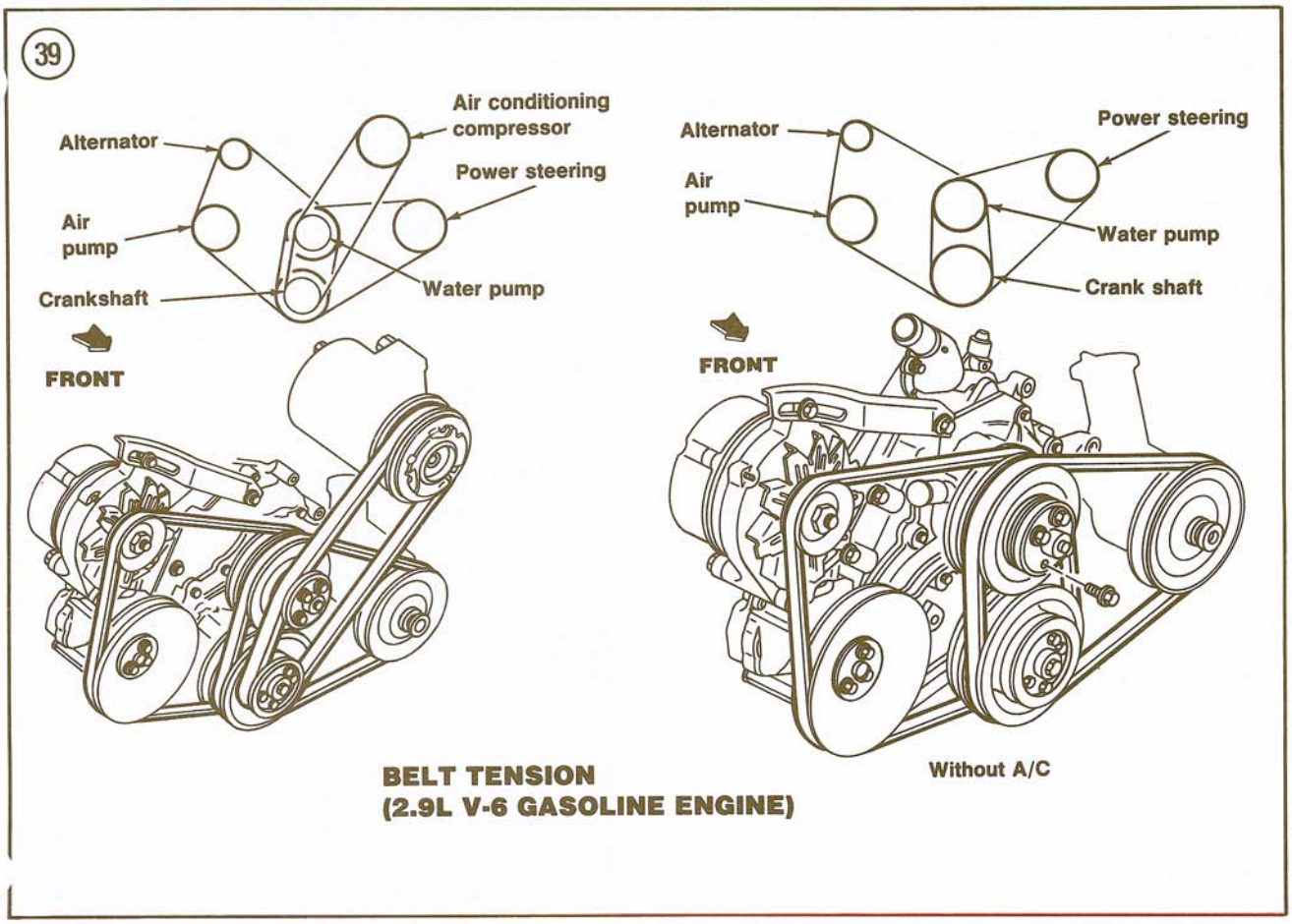

BELT TENSION (2.9L V-6 GASOLINE ENGINE)

11. Fit a new gasket to the pan. Install the pan to the transmission case and tighten the attaching bolts following the sequence shown in **Figure 40**. Tighten C3 and C5 pan bolts to 12-16 ft.-lb. (16-22 N•m). Tighten A4LD pan bolts to 5-10 ft.-lb. (7-14 N•m).
12. Clean all dirt from the transmission fluid dipstick cap and remove the dipstick. See **Figure 41** (typical).

CAUTION

Use only Type H or equivalent automatic transmission fluid in the C5 transmission. Use only Dexron II or equivalent in the C3 or A4LD transmissions. Use of any other fluid may cause internal damage to the transmission.

13. Using a clean funnel with a fine-mesh filter, fill the transmission through the dipstick tube with approximately 3 quarts of Type H automatic transmission fluid (C5 transmission) or Dexron II automatic transmission fluid (C3 or A4LD transmission). Start the engine and let it idle for 2 minutes.
14. Set the parking brake and block the drive wheels. Move the selector lever from the PARK position through each gear range, pausing long enough for the transmission to engage. Return the lever to the PARK position.
15. Remove the dipstick and wipe it clean with a lint-free cloth or paper towel. Reinsert the dipstick in the filler tube until it seats completely.
16. Remove the dipstick again and check the fluid level. It should be between the "ADD" and "FULL" marks. Top up, if necessary, with the proper fluid. Reinstall the dipstick.

NOTE

Do not overfill the transmission. This will cause foaming and a loss of fluid through the vent, which will result in a premature transmission failure.

Clutch Reservoir

At the intervals stated in **Tables 1-4**, clean the clutch reservoir and cap, then remove the cap, rubber diaphragm and gasket. Check to make sure the fluid level is at the step in the cylinder wall.

Top up, if necessary, with DOT 3 or DOT 4 brake fluid from an unopened container and check the clutch master cylinder for signs of leakage.

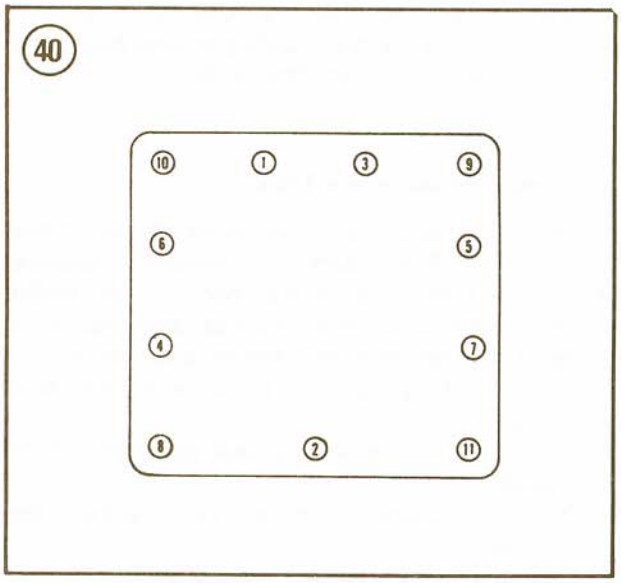

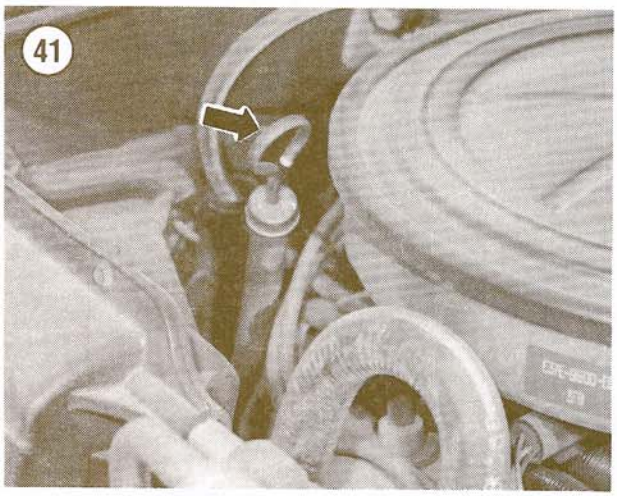

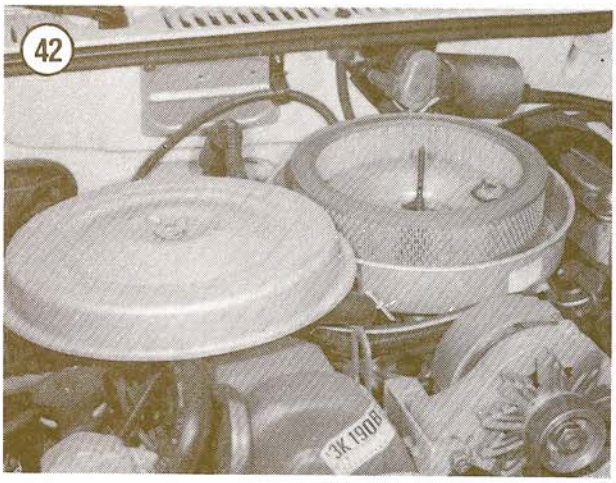

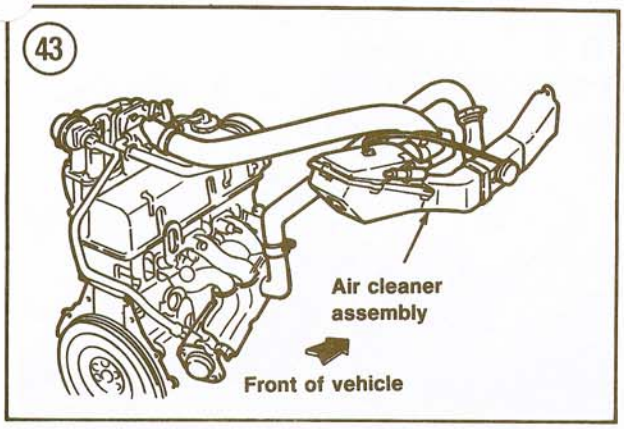

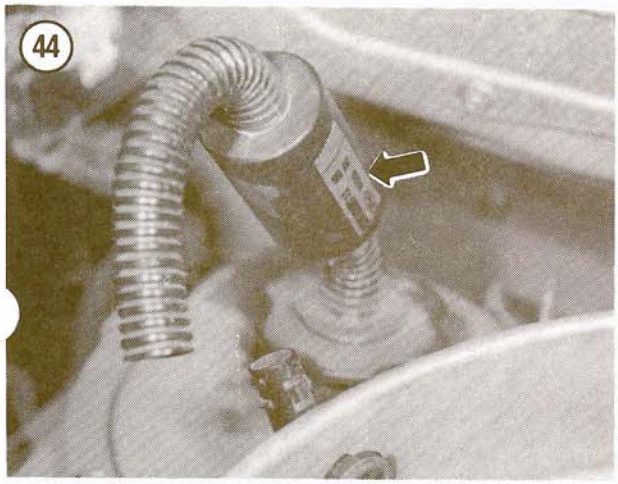

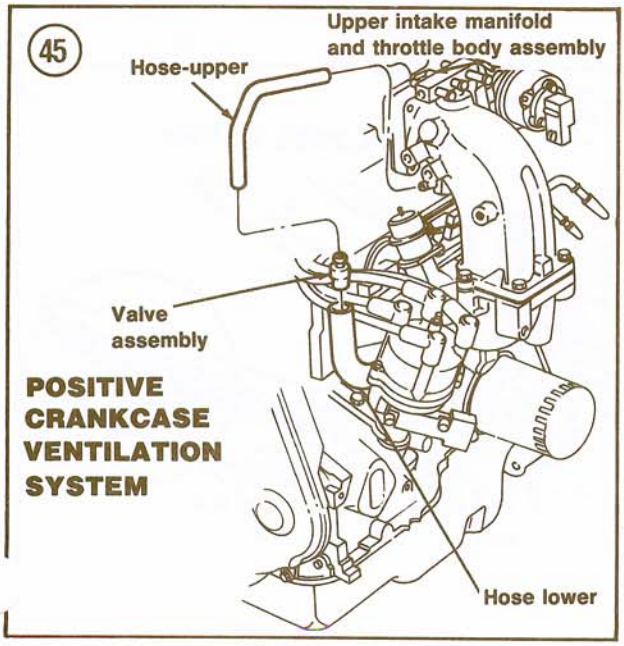

Spark Plugs

See *Gasoline Engine Tune-up* in this chapter.

Air Cleaner Filter (Carburetted and 2.2L Diesel Engine)

Unscrew the wing nut and remove the air cleaner cover. See **Figure 42** (typical). Lift out the old filter and wipe the inside of the air cleaner housing with a damp paper towel to remove dust, dirt and debris. Install a new filter and reinstall the cover, tightening the wing nut snugly.

Air Cleaner Filter (Fuel Injected and 2.3L Diesel Engine)

Loosen the air outlet hose clamp at the air cleaner cover and disconnect the hose at the cover. Unsnap the cover clamps (diesel) or loosen the cover screws (fuel injected) and remove the cover and filter from the housing. See **Figure 43** (typical). Separate the old filter from the cover and wipe the inside of the air cleaner housing with a damp paper towel to remove dust, dirt and debris. Install a new filter, reinstall the cover and snap the clamps in position or tighten the cover screws to 5-7 ft.-lb. (7-9 N•m).

Crankcase Filter (4-cylinder Gasoline)

The crankcase filter (**Figure 44**) is installed in a hose between the valve cover cap and air cleaner on gasoline engines. At the intervals stated in **Table 1**, disconnect the hose at the air cleaner and replace the entire cap/filter assembly.

NOTE

Diesel engines use a baffle in the valve cover instead of a crankcase filter.

PCV Valve

All gasoline engines are equipped with a positive crankcase ventilation (PCV) valve. On carburetted 4-cylinder engines, the PCV valve is installed in a line between the crankcase oil separator and the purge control or purge solenoid valve. On fuel-injected engines, the PCV valve is installed in a line between the crankcase oil separator and the throttle body assembly. **Figure 45** shows the typical PCV valve location on 4-cylinder engines.

On the 2.8L V6, the PCV valve is installed in the right (passenger side) cylinder head rocker arm cover almost directly under the choke cap (**Figure 46**). On the 2.9L V6, the PCV valve is installed in the center of the left (driver's side) rocker arm cover.

The PCV valve should be checked periodically. See Chapter Six.

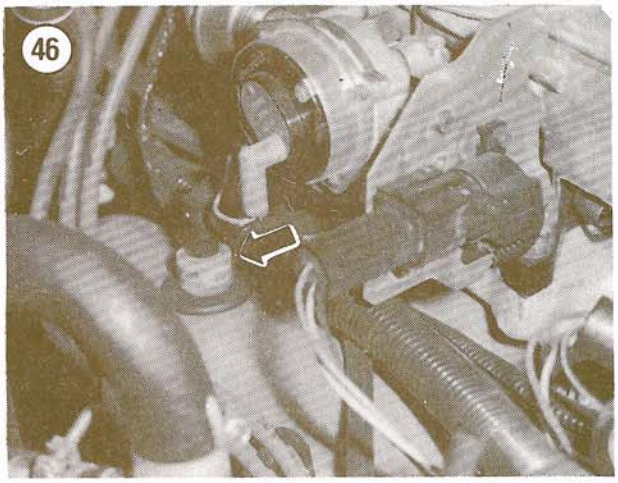

Fuel Filter (Diesel Engine)

2.2L diesel

CAUTION

The 2.2L diesel engine fuel filter resembles an engine oil filter externally. Internally, they are entirely different. Using either filter as a substitute for the other may cause serious engine damage.

The 2.2L diesel engine uses an inline filter canister which screws into the fuel filter priming pump assembly (**Figure 47**). This filter should replaced every 30,000 miles (or more frequently if clogged) with a new Motorcraft FD-812 filter (or equivalent). To replace the 2.2L fuel filter:

1. Disconnect the negative battery cable from both batteries.
2. Using a suitable filter wrench, turn the filter element (A, **Figure 47**) counterclockwise and remove. Be careful not to spill fuel from the filter element.
3. Wipe the gasket sealing surface on the priming pump assembly clean with a paper towel.
4. Apply a thin film of clean diesel fuel to the sealing gasket on the new filter.
5. Thread the filter element into the priming pump assembly and turn clockwise until the sealing gasket just contacts the assembly sealing surface. Tighten the filter element another 1/2 to 3/4 turn by hand.
6. Clean any spilled fuel from the side of the engine or top of the starter housing.
7. Loosen the fuel filter air vent plug on the priming pump (B, **Figure 47**).
8. Operate the priming pump several times until the fuel flowing from the vent plug hole is free of air bubbles.
9. Hold the pump lever depressed and close the air vent plug tightly. Clean any spilled fuel from around the vent plug hole.
10. Reconnect the negative battery cable to each battery.
11. Start the engine and check for fuel leaks.

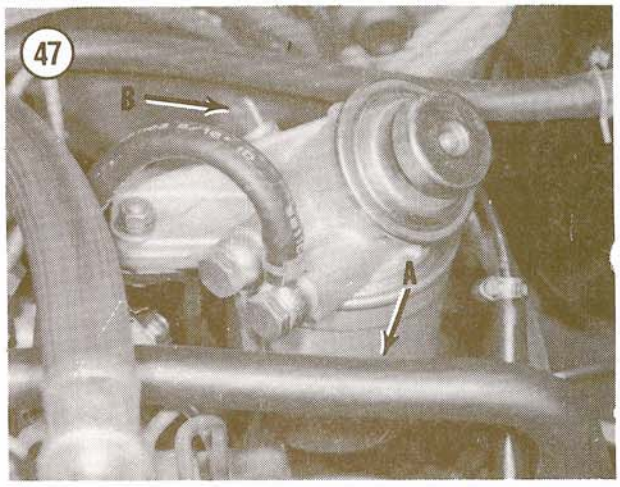

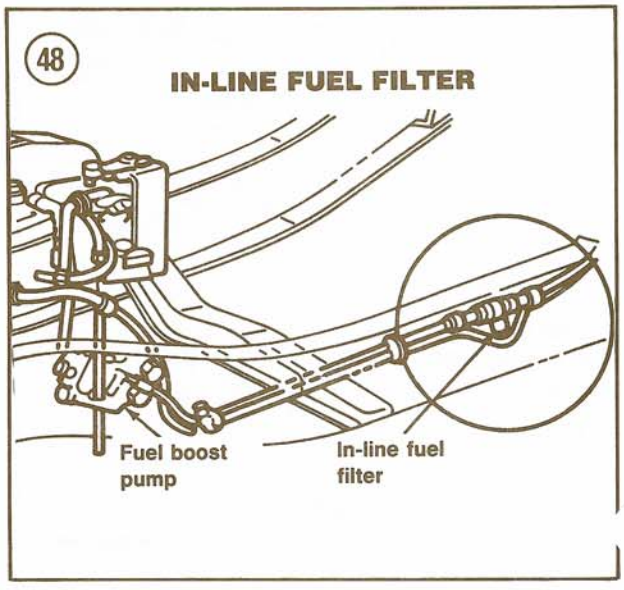

49

FUEL CONDITIONER FILTER ELEMENT REPLACEMENT

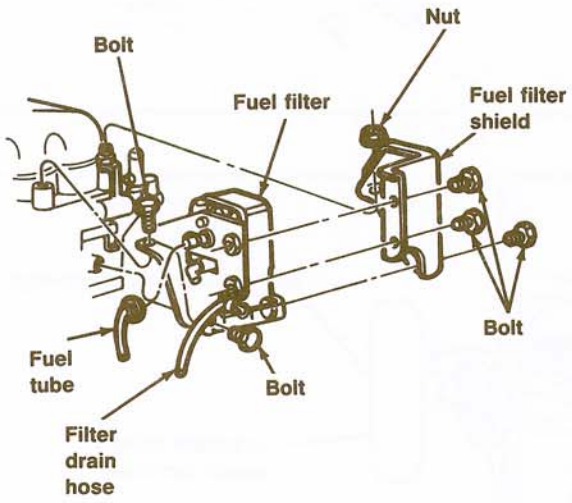

50

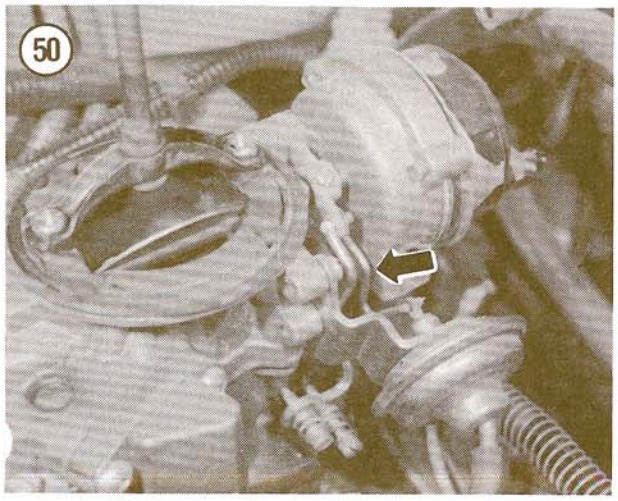

2.3L turbo diesel

The 2.3L turbo diesel engine uses two filters: an inline filter is positioned on the left side frame rail about 2 feet behind the fuel boost pump (**Figure 48**) and a fuel conditioner filter element is bracket-mounted to the engine (**Figure 49**). The filter should be replaced every 30,000 miles (or more frequently if clogged) with a new filter element.

To replace the inline filter element:

1. Disconnect the negative battery cable from both batteries.
2. Raise the vehicle with a jack and place it on jackstands.
3. Carefully pinch off the rear hose at the filter with a clamp.
4. Grasp each hose clamp with pliers and slide back on the hose about one inch.
5. Remove the filter from the hoses.
6. Installation is the reverse of removal.

To replace the fuel conditioner filter element:

1. Disconnect the negative battery cable from both batteries.
2. Remove the 3 bolts and 1 nut holding the rear shield to the fuel conditioner. See **Figure 49**. Remove the shield.
3. Unsnap the 2 clamps holding the rectangular filter element in place. Remove the filter element from the conditioner base.
4. Align the grommet holes of a new filter element to the inlet/outlet tubes on the conditioner base.
5. Press the element against the conditioner base and snap the 2 hold-down clamps in place.
6. Install rear shield and tighten the bolts/nut to 28-36 ft.-lb. (37-50 N•m).
7. Reconnect the negative battery cable to each battery.
8. Start the engine and check for fuel leaks.

Choke Linkage

Check for damaged or missing parts. Work the choke lever back and forth to check for interference or binding. Spray the choke mechanism and housing with Ford automatic choke cleaner part No. D8AZ-19A501-A or equivalent while moving the choke lever, fast idle lever and fast idle cam. See **Figure 50** (typical). Blow linkage dry with compressed air and repeat the cleaning procedure until all dirt buildup has been removed.

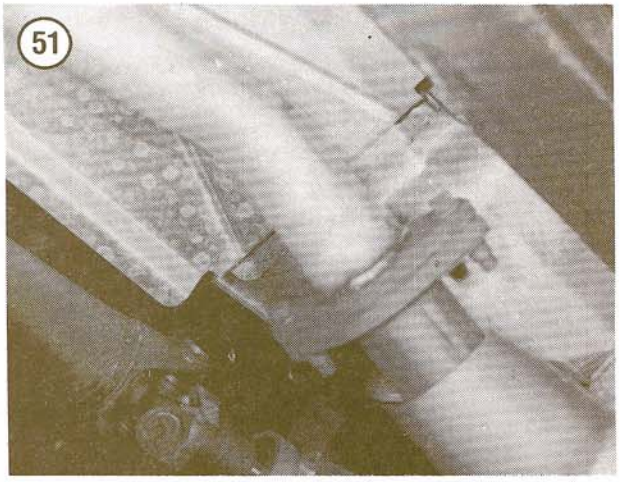
51

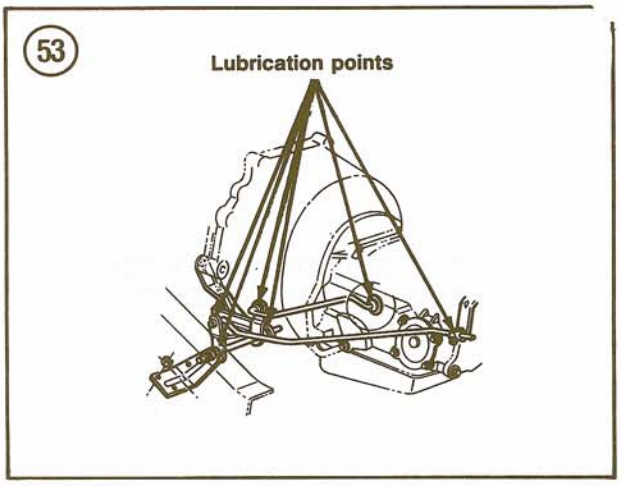
53
Lubrication points

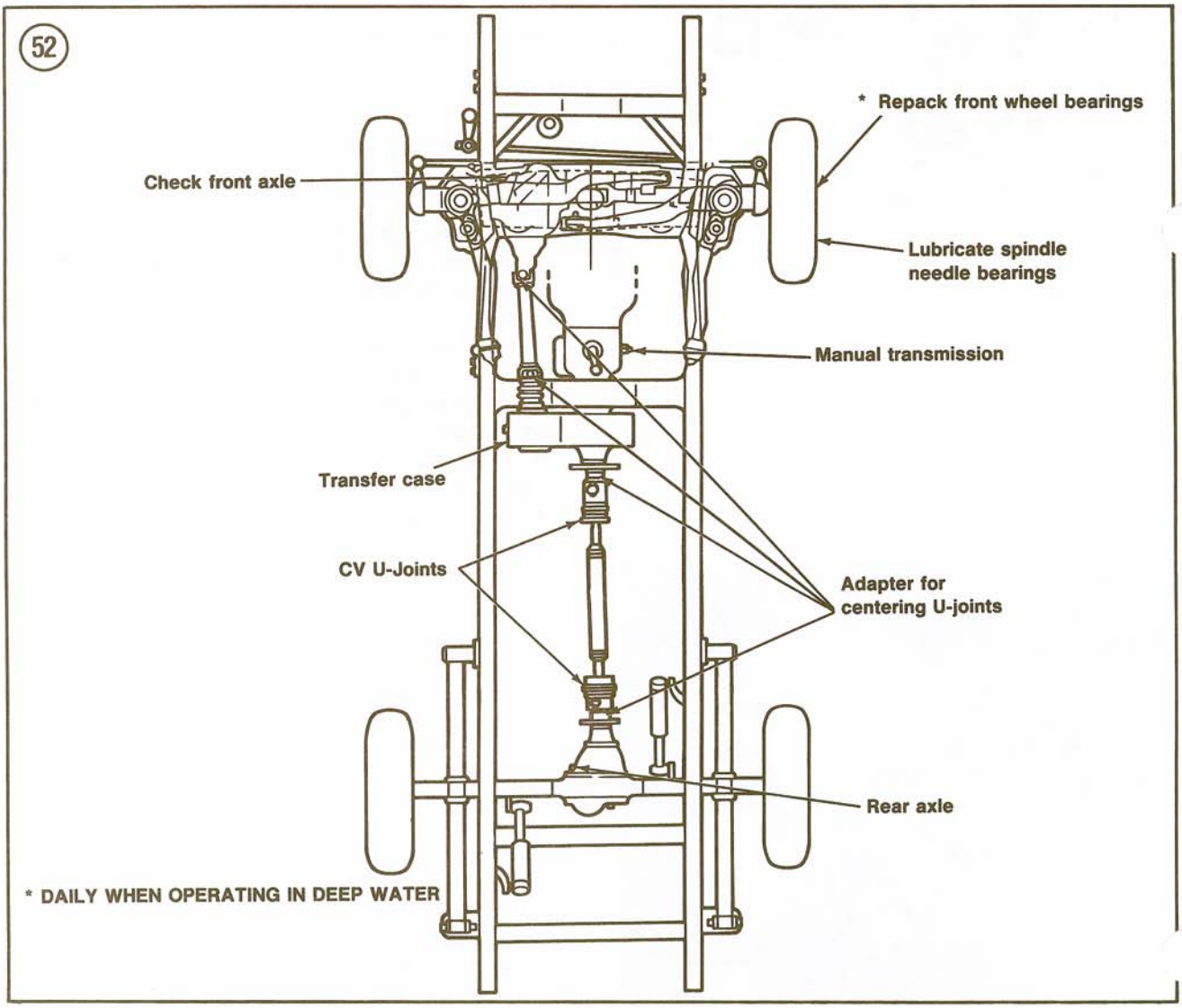
52
* Repack front wheel bearings
Check front axle
Lubricate spindle needle bearings
Manual transmission
Transfer case
CV U-Joints
Adapter for centering U-joints
Rear axle
* DAILY WHEN OPERATING IN DEEP WATER

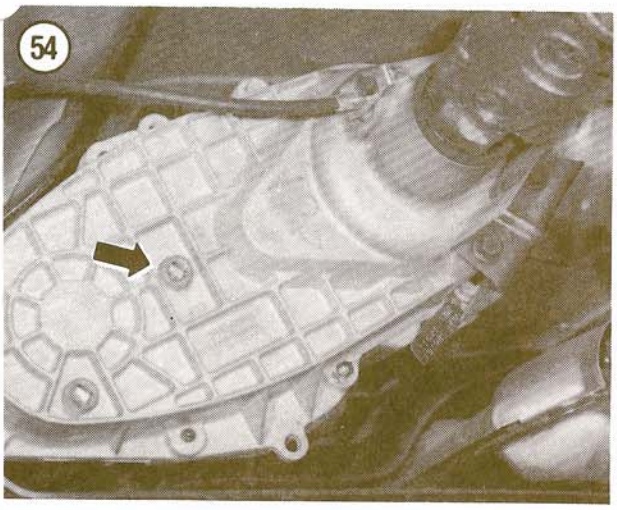

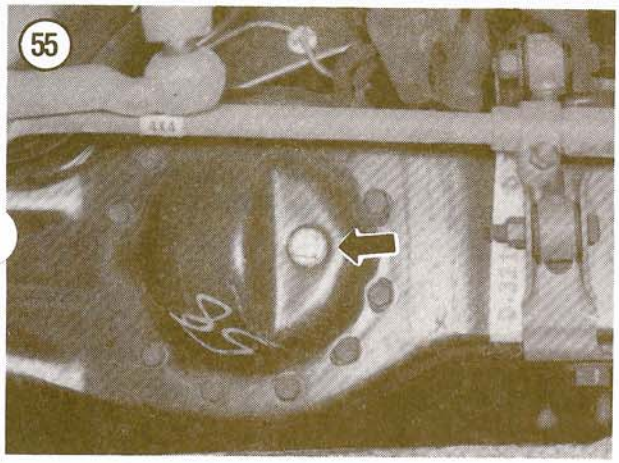

Exhaust Heat Shields

Remove any debris that may have accumulated on or about the heat shields. **Figure 51** shows a length of heat shield and its fasteners. Check the shield and their attachment bolts/brackets for damage. Replace as required.

Front Wheel Bearings

Clean, repack and adjust the wheel bearings. See Chapter Ten (2-wheel drive) or Chapter Twelve (4-wheel drive).

Disc Brakes

Remove the wheel/tire assemblies and check the surface of the rotors. Check the lining thickness through the inspection hole in the top of the caliper. Measure the lining thickness along the outside lining edge of each pad without removing the caliper assembly. Replace all pads if any lining is worn to less than 0.168 in. (4.27 mm) at any point measured. See Chapter Thirteen.

Drum Brakes, Lines and Hoses

Remove the brake drums and check the lining thickness on the brake shoes. Replace all shoes if any lining is worn to within 1/32 in. (0.794 mm) of a rivet head.

Check brake lines and hoses for proper routing and condition. Look for binding, leaking, chafing, cracking or other defects. Correct any defects found. See Chapter Thirteen.

Drivetrain Lubrication (4-wheel Drive)

At the intervals stated in **Table 1**, lubricate the following points on 4-wheel drive vehicles with Ford Multi-Purpose Long-Life Lubricant (part No. C1AZ-19590-B) or equivalent:

a. Transfer case front output shaft slip yokes.
b. Right-hand front drive axle shaft slip yoke.
c. Rear drive shaft double cardan joint centering ball.

At the intervals stated in **Table 1**, check the hub lock and spindle needle bearing lubrication. Lubricate as required with Ford Multi-purpose Long-life Lubricant or equivalent. See **Figure 52**.

Drivetrain Lubrication (All Vehicles)

At the intervals stated in **Table 1**, lubricate the following points on all vehicles with Ford Multi-purpose Long-life Lubricant (part No. C1AZ-19590-B) or equivalent:

a. Automatic transmission shift linkage (**Figure 53**).
b. Drive shaft U-joint (if equipped with grease fitting).
c. Throttle ball stud.
d. Drive shaft double cardan joint centering ball.

Transfer Case and Drive Axle Fluid Level

At the intervals specified in **Table 1**, check the fluid level by removing the transfer case (**Figure 54**) and front drive axle (**Figure 55**) fill plugs. If

operated in mud or water, perform this check daily. Perform it whenever fluid leakage or contamination is noted or when a malfunction is suspected.

To check the level, raise the vehicle with a jack and place it on jackstands. Loosen and slowly unscrew the fill plug. If fluid seeps out around the plug, the level is satisfactory. If fluid does not seep out, remove the plug and fill the unit with the specified lubricant (**Table 7**) until it runs out of the bottom of the fill plug hole. Reinstall and tighten the fill plug securely.

NON-SCHEDULED MAINTENANCE

Some maintenance tasks formerly included in scheduled factory maintenance recommendations are now considered as non-scheduled maintenance on the Ford vehicles covered in this manual. Ford continues to recommend they be performed, but on an "as required" or "periodic" basis.

Fuel Tank, Cap and Lines

Check the fuel tank, cap and lines for leaks or damage. Remove the fuel cap and check the gasket for an even filler neck imprint.

Exhaust System

WARNING

To avoid serious burns, make sure the exhaust system is cool before performing the next step.

Inspect the entire exhaust system including the catalytic converter for rust, open holes, seams, loose connections or other unsafe conditions. Check for broken, damaged, missing or out-of-position components and repair or replace as required.

Body Care and Lubrication

Clean the drain holes along the bottom surface of the door and side panels with an awl or small screwdriver blade whenever the truck is washed.

Lubricate the door and tailgate hinges, door locks, door and hood latches when they become noisy or difficult to operate. Door and tailgate hinge lubrication points are shown in **Figure 56**.

Tire Inspection and Rotation

Check each tire for holes, cuts or bruises in the sidewall that might allow air leakage. Remove all stones and other objects wedged in the tread grooves. Check tire valves for air leaks and replace if necessary.

Check tires for wear. If uneven wear is noted, rotate the tires front to rear as shown in **Figure 57** and take the vehicle to a Ford dealer to determine and correct the cause of such wear.

CAUTION

*Use the 4-tire rotation pattern shown in **Figure 57** if the vehicle is equipped with a temporary use spare tire. Do not include such a spare in tire rotation.*

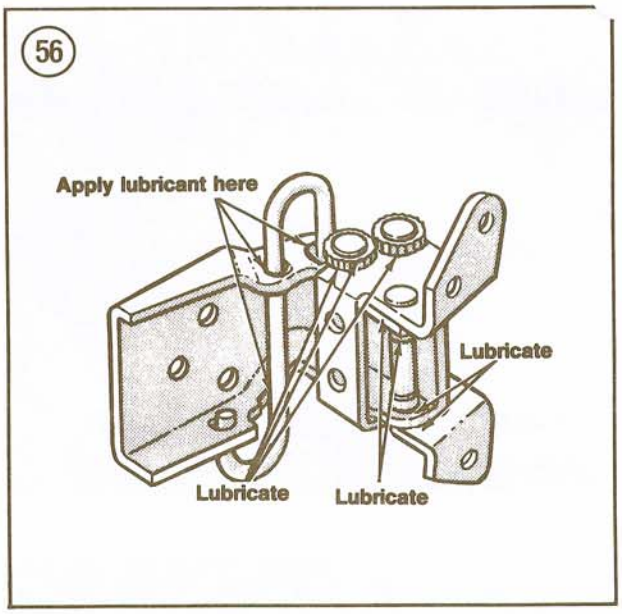

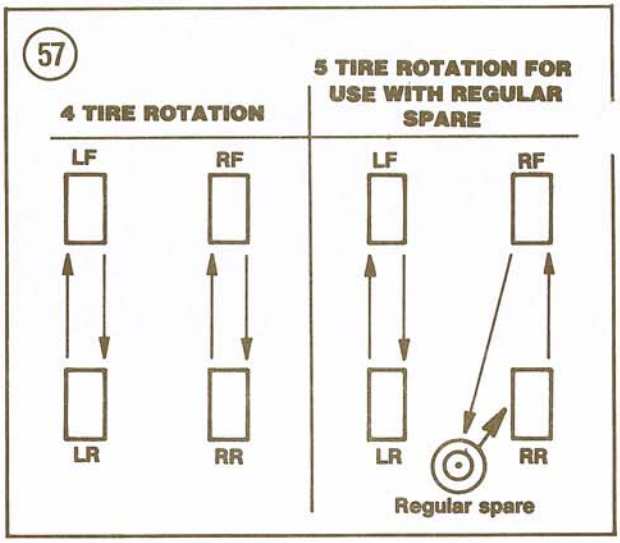

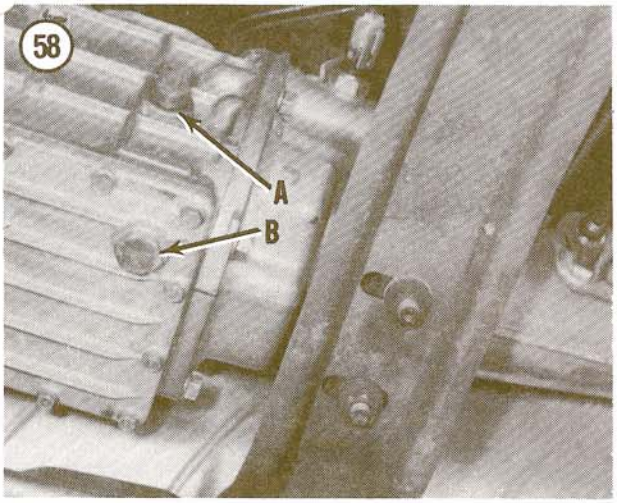

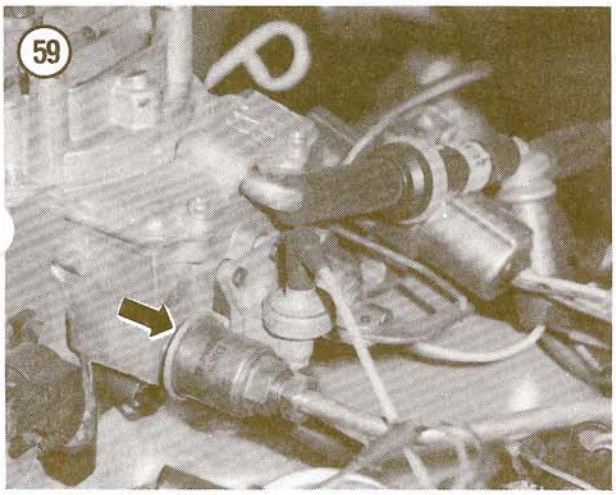

Fluid Leak Check

Inspect the underbody of the vehicle for signs of fluid leakage. Clean and correct as necessary.

Manual Transmission Fluid Level

Check the manual transmission fluid level whenever leakage or contamination is present. Back out the filler plug slowly. See A, **Figure 58** for a typical filler plug location. If fluid starts to seep out from around the plug threads, the fluid level is satisfactory. Tighten the plug to 18-29 ft.-lb. (25-39 N•m).

If fluid does not seep out from around the plug threads when the filler plug is backed out, remove the plug and fill with the recommended lubricant (**Table 7**) until the fluid runs out of the filler hole. Install the filler plug and tighten to specifications above.

To change transmission fluid, place a suitable container under the drain plug. See B, **Figure 58** for a typical drain plug location. Remove the plug and let the lubricant drain, then reinstall the plug and tighten to 29-43 ft.-lb. (40-58 N•m). Remove the filler plug and fill with sufficient lubricant of the recommended type. See **Table 7** and **Table 8**. Install and tighten the filler plug as described above.

Chassis Lubrication

No periodic chassis lubrication is necessary. Ball-joints use a special bearing material that does not require lubrication.

Automatic Transmission Shift Linkage

Check, adjust and lubricate the automatic transmission shift linkage whenever hard shifting is encountered or if the shift indicator is not in its correct position. See Chapter Nine.

Fuel Filter

Carburetted engine

The fuel system on carburetted engines uses an inline filter canister which screws into the carburetor inlet port (**Figure 59**). No maintenance is specified other than to replace the filter if it becomes restricted. To change the fuel filter:

1. Remove the air cleaner. See Chapter Six.
2. Hold the fuel filter with an open-end wrench and loosen the fuel line attaching nut with a second open-end wrench.
3. Disconnect the fuel line from the filter. Cap the line and move it out of the way.
4. Unscrew the filter from the carburetor inlet port with an open-end wrench.
5. Apply a drop of Loctite 69 to the outer threads of the new filter. Thread the filter into the carburetor inlet port and tighten to 80-100 in.-lb. (9-11 N•m).
6. Uncap the fuel line, fit it into the fuel filter inlet and hand start the nut 2-3 threads.
7. Hold the fuel filter from rotating with an open-end wrench and tighten the fuel line nut with

a second open-end wrench. Tighten nut to 15-18 ft.-lb. (20-24 N•m).
8. Start the engine and check for leaks.
9. Shut the engine off and install the air cleaner. See Chapter Six.

Fuel injected engine

WARNING

Before opening any fuel lines or connections on a fuel injected engine, relieve system pressure as described in Chapter Six.

Fuel injected engines may use either a cartridge filter element (**Figure 60A**) or a disposable filter canister (**Figure 60B**). The cartridge filter element is contained in a canister attached to a fuel reservoir assembly installed in the fuel line under the vehicle. The reservoir assembly is mounted on the left-hand (driver's side) frame rail behind a protective shield. The disposable filter canister is mounted in a similar location. Ford states that either type of filter should last for the life of the vehicle under normal driving conditions.

Cartridge filter element replacement

Refer to **Figure 60A** for this procedure.

1. Relieve fuel system pressure. See Chapter Six.
2. Remove the fuel filler cap.
3. Securely block the wheels that remain on the ground. Raise the vehicle with a jack and place it on jackstands.
4. 4-wheel drive—Remove the transfer case skid plate, if so equipped.
5. Remove the screws holding the protective shield. Remove the shield on 2-wheel drive vehicles; rotate it counterclockwise on 4-wheel drive vehicles, then slide it forward on the frame rail toward the front of the vehicle to expose the reservoir assembly.
6. Use a flexible strap oil filter wrench and remove the filter canister from the reservoir assembly bolted to the frame rail. On 4-wheel drive vehicles, the canister must be lifted up and over the front drive shaft, then down and out from under the vehicle to avoid spillage.
7. Empty the fuel in the canister into a suitable container. Remove the filter element and O-ring from the canister and discard both.
8. Wipe the inside of the canister with a clean paper towel to remove any contamination or residue.
9. Install a new filter element in the canister, then install a new O-ring in the canister groove.
10. Align the canister with the bottom of the reservoir housing. Hold canister level to prevent

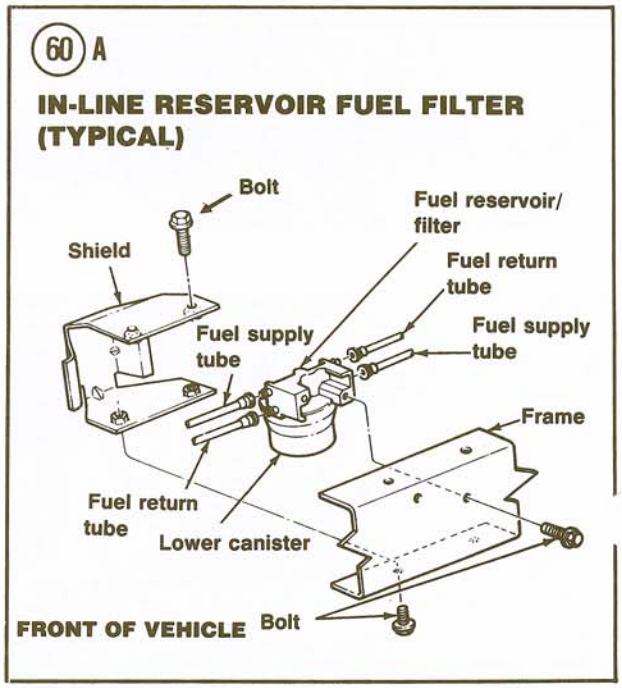

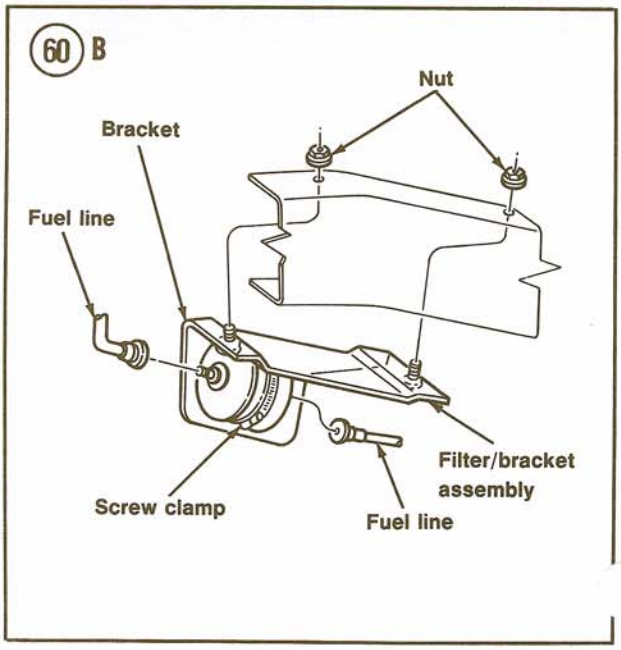

the O-ring from moving out of position, then thread canister onto reservoir housing until you feel the initial compression of the O-ring.
11. Use the oil filter wrench to tighten the canister another 1/6 turn.
12. Reverse Steps 1-5 to complete installation. Tighten shield screws to 15-19 ft.-lb. (20-27 N•m).

Disposable filter canister replacement

Refer to **Figure 60B** for this procedure.
1. Relieve fuel system pressure. See Chapter Six.
2. Remove the fuel filler cap.
3. Block the front wheels. Raise the rear of the vehicle with a jack and place it on jackstands.
4. Disconnect the push-connect fittings at each end of the fuel filter. See Chapter Six. Cap the lines to prevent leakage.
5. Loosen the filter clamp screw enough to slide the old filter from the clamp and remove it from the vehicle.
6. Slide a new filter into position in the clamp. Make sure the arrow indicating direction of flow points toward the engine. Tighten the clamp screw to 15-25 in.-lb. (1.7-2.8 N•m).
7. Install a new retainer clip in each push-connect fitting and reattach lines to the new filter. See Chapter Six.
8. Reverse Steps 1-3 to complete installation.

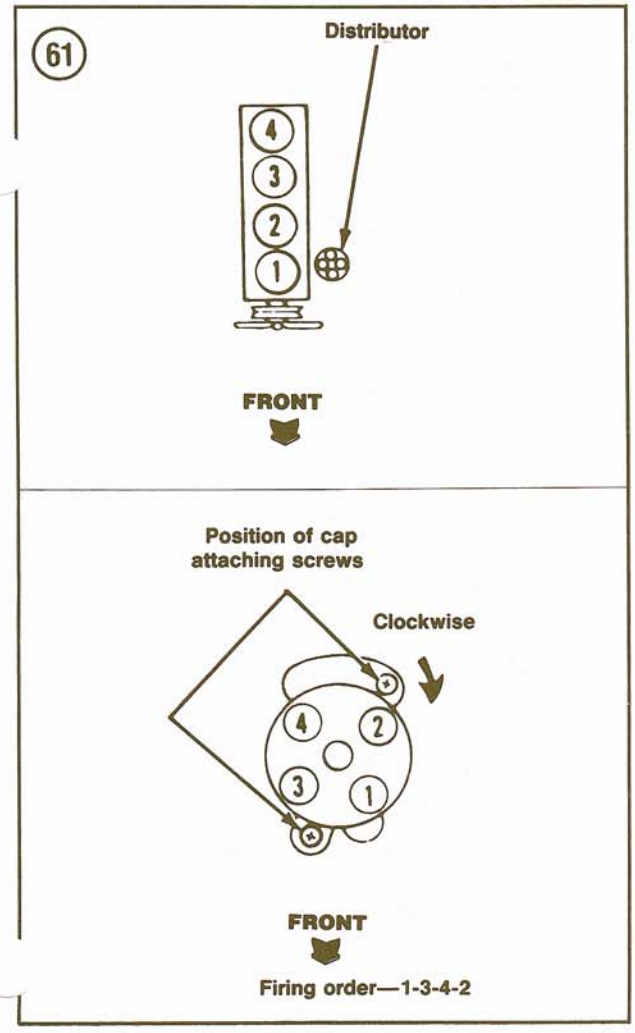

GASOLINE ENGINE TUNE-UP

A tune-up consists of a series of inspections, adjustments and part replacements to compensate for normal wear and deterioration of engine components. Regular tune-ups are especially important to modern engines. Emission control systems, improved electrical systems and other advances make these engines especially sensitive to improperly operating or incorrectly adjusted parts.

Since proper engine operation depends upon a number of interrelated system functions, a tune-up consisting of only 1 or 2 corrections will seldom give lasting results. For improved power, performance and operating economy, a thorough and systematic procedure of analysis and correction is necessary.

Always refer to the Vehicle Emission Control Information (VECI) decal on the valve cover or elsewhere in the engine compartment for the correct tune-up specifications for your vehicle. To prevent loss of this information in the event of decal damage, it is a good idea to copy the specifications on a 3×5 in. file card and keep it in the glove compartment.

NOTE

Ford Motor Co. does not provide general tune-up specifications. You must refer to the VECI decal for this information.

A tune-up consists of the following:
a. Valve clearance adjustment (2.8L V6 only).
b. Check engine compression.
c. Ignition system inspection and adjustment.
d. Carburetor check and adjustment.

Firing Order

The cylinder firing order for 4-cylinder engines is 1-3-4-2 (cylinder No. 1 is at the front). See **Figure 61**. On the V6, it is 1-4-2-5-3-6 (cylinder No. 1 is

the front cylinder in the right or passenger side bank). See **Figure 62.**

Valve Clearance Adjustment

The 2.9L V6 is equipped with hydraulic lifters. Correct valve clearance in this engine is maintained automatically throughout the life of the engine. Hydraulic lifters do not require periodic adjustment but may require replacement when the valve train requires service.

The 2.8L V6 uses mechanical valve lifters. Valve clearance should be checked and adjusted according to **Table 1** or whenever any valve train component is replaced. Valve clearance is checked with the engine cold. Intake valve clearance is 0.014 in. Exhaust valve clearance is 0.016 in. Valve arrangement (front to rear) is I-E-E-I-E-I on the left bank and I-E-I-E-E-I on the right bank.

1. Remove the rocker arm covers. See Chapter Five.
2. Connect a remote starter button to the starter relay according to manufacturer's instructions.
3. Holding a finger on the No. 5 intake valve adjusting screw, turn the engine over with the remote starter button until the intake valve just starts to open. This positions the camshaft properly to adjust the No. 1 cylinder valves.

CAUTION

Insert feeler gauge at front or rear edge of valve tip and move it in the opposite direction to check clearance. Inserting the feeler gauge at the outer edge of the valve tip and moving it toward the carburetor will give a false feeling of insufficient clearance, resulting in unnecessary adjustment.

4. Insert a 0.014 in. feeler gauge between the rocker arm and the No. 1 intake valve stem (**Figure 63**). The gauge should enter the gap with slight resistance and have a light to moderate drag when removed. If adjustment is necessary, turn the self-locking adjusting screw clockwise to decrease or counterclockwise to increase clearance as required.
5. Repeat Step 4 with a 0.016 in. feeler gauge to check the No. 1 exhaust valve clearance.
6. To adjust the remaining cylinders in the firing order, position the cam as in Step 3 to open the intake valves in the order specified and adjust the corresponding valves.
   a. No. 3 intake valve starts to open—adjust both No. 4 valves.
   b. No. 6 intake valve starts to open—adjust both No. 2 valves.
   c. No. 1 intake valve starts to open—adjust both No. 5 valves.
   d. No. 4 intake valve starts to open—adjust both No. 3 valves.
   e. No. 2 intake valve starts to open—adjust both No. 6 valves.
7. Reinstall the rocker arm covers.

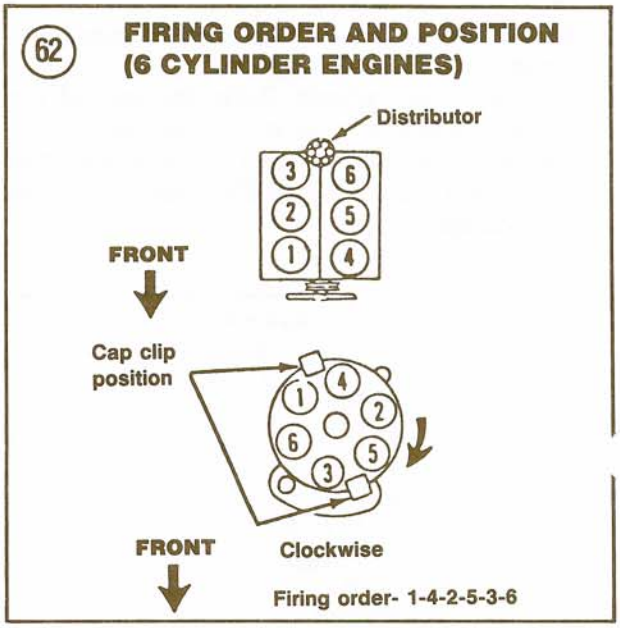

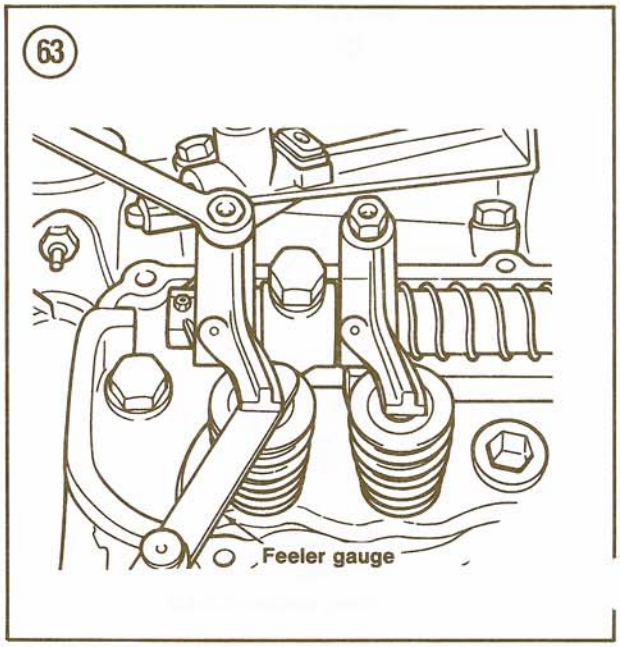

Compression Test

An engine with low or uneven compression cannot be properly tuned. Whenever the spark plugs are removed from the engine, it is a good idea to run a compression test. A compression test measures the compression pressure built up in each cylinder. Its results can be used to assess general cylinder and valve condition. In addition, it can warn of developing problems inside the engine.

1. Start the engine and warm to normal operating temperature (upper radiator hose hot). Shut the engine off. Make sure the choke and throttle valves are wide open on carburetted engines.
2. Remove all spark plugs as described in this chapter.
3. Connect a remote starter switch to the starter relay according to manufacturer's instructions. Leave the ignition switch in the OFF position.
4. Connect a compression gauge to the No. 1 cylinder following the manufacturer's instructions.

NOTE

The No. 1 cylinder is the front cylinder on 4-cylinder engines and the front cylinder in the right bank on V6 engines.

5. Crank the engine at least 5 compression strokes with the remote starter switch or until there is no further increase in compression shown on the tester gauge.
6. Remove the compression tester and record the reading. Relieve the tester pressure valve.

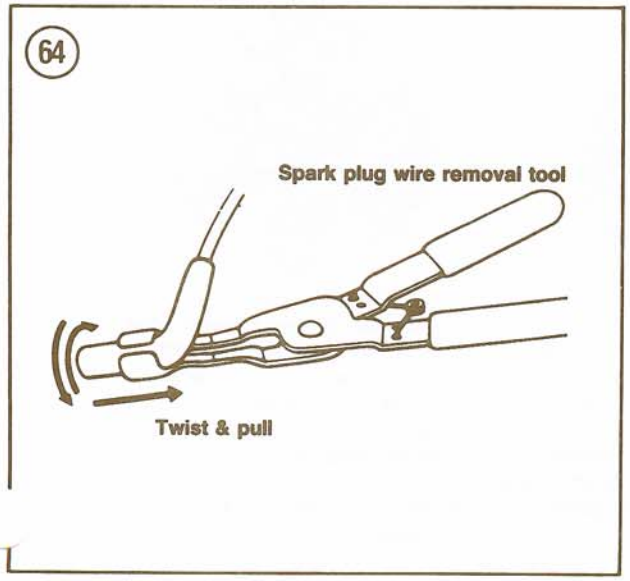

7. Repeat Steps 4-6 to test each remaining cylinder.

When interpreting the results, actual readings are not as important as the differences in readings. The lowest must be within 75 percent of the highest. A greater difference indicates worn or broken rings, leaking or sticking valves or a combination of these problems.

If the compression test indicates a problem (excessive variation in readings), isolate the cause with a wet compression test. This is done in the same way as the dry compression test already described except that about 1 tablespoon of oil is poured down the spark plug hole before performing Steps 4-6. If the wet compression readings are much greater than the dry readings, the trouble is probably caused by worn or broken piston rings. If there is little difference between the 2 readings, the problem is probably due to leaky or sticking valves. When 2 adjacent cylinders read low during both dry and wet testing, the problem may be a defective head gasket.

Spark Plug Removal

Spark plugs should be replaced every 30,000 miles.

CAUTION

Whenever the spark plugs are removed, dirt from around them can fall into the spark plug holes. This can cause expensive engine damage.

1. Blow out any foreign matter from around the spark plugs with compressed air. Use a compressor if you have one. Cans of compressed inert gas are available from photo stores.

NOTE

It is a good idea to identify each spark plug wire with a piece of marking tape and a felt-tip pen before removing the wires in Step 2. Another way of identifying the wires is to write the wire location on a wooden clothes pin which is then clipped to the wire.

2. Disconnect the spark plug wires by twisting the wire boot back and forth on the plug insulator while pulling upward. Pulling on the wire instead of the boot may cause internal damage to the wire. Wire removal with spark plug terminal pliers (**Figure 64**) is recommended where there is sufficient clearance for their use.

(65)

SPARK PLUG CONDITION



NORMAL

- Identified by light tan or gray deposits on the firing tip.
- Can be cleaned.



GAP BRIDGED

- Identified by deposit buildup closing gap between electrodes.
- Caused by oil or carbon fouling. If deposits are not excessive, the plug can be cleaned.



OIL FOULED

- Identified by wet black deposits on the insulator shell bore and electrodes.
- Caused by excessive oil entering combustion chamber through worn rings and pistons, excessive clearance between valve guides and stems, or worn or loose bearings. Can be cleaned. If engine is not repaired, use a hotter plug.



CARBON FOULED

- Identified by black, dry fluffy carbon deposits on insulator tips, exposed shell surfaces and electrodes.
- Caused by too cold a plug, weak ignition, dirty air cleaner, too rich a fuel mixture or excessive idling. Can be cleaned.



LEAD FOULED

- Identified by dark gray, black, yellow or tan deposits or a fused glazed coating on the insulator tip.
- Caused by highly leaded gasoline. Can be cleaned.



WORN

- Identified by severly eroded or worn electrodes.
- Caused by normal wear. Should be replaced.



FUSED SPOT DEPOSIT

- Identified by melted or spotty deposits resembling bubbles or blisters.
- Caused by sudden acceleration.

Can be cleaned.

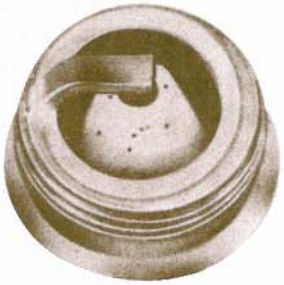

OVERHEATING

- Identified by a white or light gray insulator with small black or gray brown spots and with bluish-burnt appearance of electrodes.
- Caused by engine overheating, wrong type of fuel, loose spark plugs, too hot a plug or incorrect igntion timing. Replace the plug.



PREIGNITION

- Identified by melted electrodes and possibly blistered insulator. Metallic deposits on insulator indicate engine damage.
- Caused by wrong type of fuel, incorrect igntion timing or advance, too hot a plug, burned valves or engine overheating. Replace the plug.

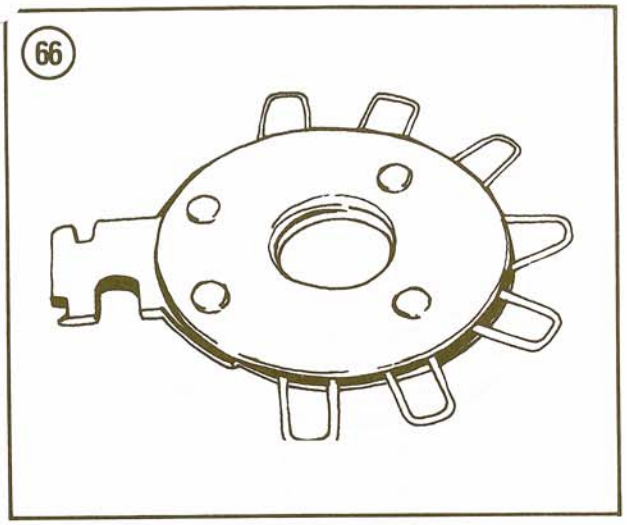

66

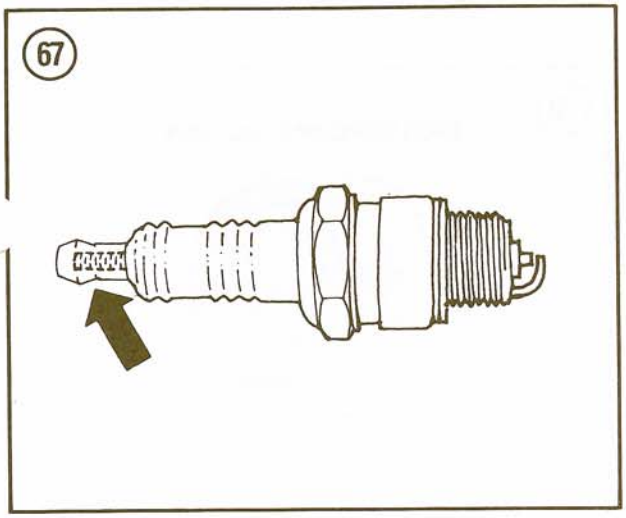

67

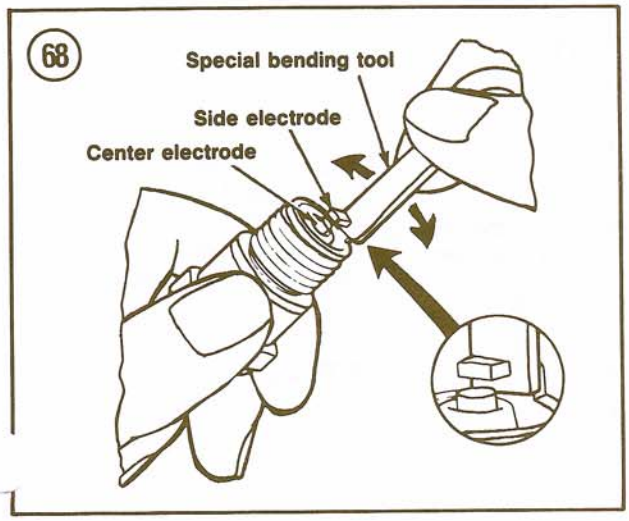

68

3. Remove the spark plugs with a 5/8 in. spark plug socket. Keep the plugs in order so you know which cylinder they came from.
4. Examine each spark plug. Compare its condition with **Figure 65**. Spark plug condition indicates engine condition and can warn of developing trouble.
5. Discard the plugs. Although they could be cleaned, regapped and reused if in good condition, they seldom last very long. New plugs are inexpensive and far more reliable.

Gapping and Installing the Plugs

New plugs should be carefully gapped to ensure a reliable, consistent spark. Use a special spark plug tool with a wire gauge. See **Figure 66** for one common type.
1. Remove the plugs from the box. Tapered plugs do not use gaskets. Some plug brands may have small end pieces that must be screwed on (**Figure 67**) before the plugs can be used.
2. Determine the correct gap setting from the VECI decal. Use a spark plug gapping tool to check the gap. Insert the appropriate size wire gauge between the electrodes. If the gap is correct, there will be a slight drag as the wire is pulled through. If there is no drag or if the wire will not pull through, bend the side electrode with the gapping tool (**Figure 68**) to change the gap and then remeasure with the wire gauge.

NOTE

Never try to close the electrode gap by tapping the spark plug on a solid surface. This can damage the plug internally. Always use the special tool to open or close the gap.

3. Check spark plug hole threads and clean with an appropriate size spark plug chaser, if necessary, before installing plugs. This will remove any corrosion, carbon build-up or minor flaws from the threads. Coat the chaser with grease to catch chips or foreign matter. Use care to avoid cross-threading.
4. Apply a thin film of engine oil or anti-seize compound to the spark plug threads and screw each plug in by hand until it seats. Very little effort is required. If force is necessary, the plug is cross-threaded. Unscrew it and try again.
5. Tighten each spark plug by hand until it makes contact. If you have a torque wrench, tighten to

5-15 ft.-lb. (7-20 N). If not, tighten the plugs an additional 1/16 turn with the plug wrench. Do not overtighten, as excessive torque may change the gap setting.

6. Inspect the spark plug wires before reinstalling them. If the insulation is oil soaked, brittle, torn or otherwise damaged, replace the wire.

7. Coat the inside of each plug wire boot with silicone compound (Ford part No. D7AZ-19A331-A or equivalent) and install the wires to their correct locations. Refer to **Figure 61** (4-cylinder) or **Figure 62** (V6).

Distributor Cap, Wires and Rotor

Carburetted 4-cylinder engine

The distributor cap, wires and rotor should be inspected every 30,000 miles or whenever the spark plugs are replaced.

1. Unscrew the 2 distributor cap latch screws. Lift the cap straight up and off to prevent rotor blade damage.
2. Check the carbon button and electrodes inside the distributor cap for dirt, corrosion or arcing. Check the cap for cracks. Replace if necessary.

NOTE

The silicone compound normally applied to the rotor on 1983-1984 and 1986 models may be thrown from the rotor to the distributor cap terminals by centrifugal force. While such deposits of silicone compound may look like a contaminant, they are normal and result in no performance loss. Do not replace the cap or rotor because of this condition.

3. Replace the wires if the insulation is melted, brittle or cracked.
4. Remove the rotor by pulling straight up and off the distributor shaft. Wipe the rotor with a clean, damp cloth. Check for burns, arcing, cracks or other defects.
5. Install the rotor on the distributor shaft. If the rotor uses a solid brass blade, it should be coated with a 1/32 in. application of Ford Silicone Dielectric Compound (part No. D7AZ-19A331-A) or equivalent. See **Figure 69**. This service is *not* required on 1985 models equipped with a multi-point rotor (**Figure 70**).
6. Install the distributor cap. Tighten the cap latch screws.

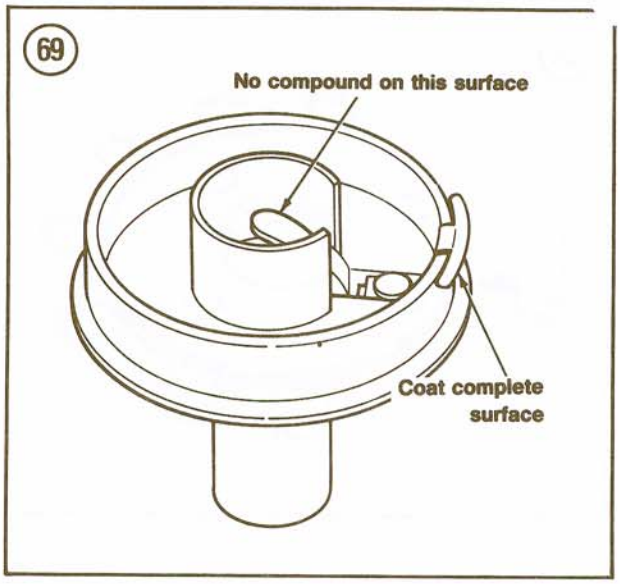

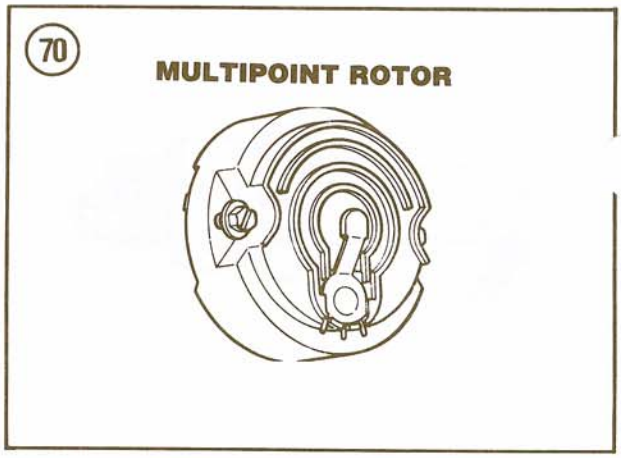

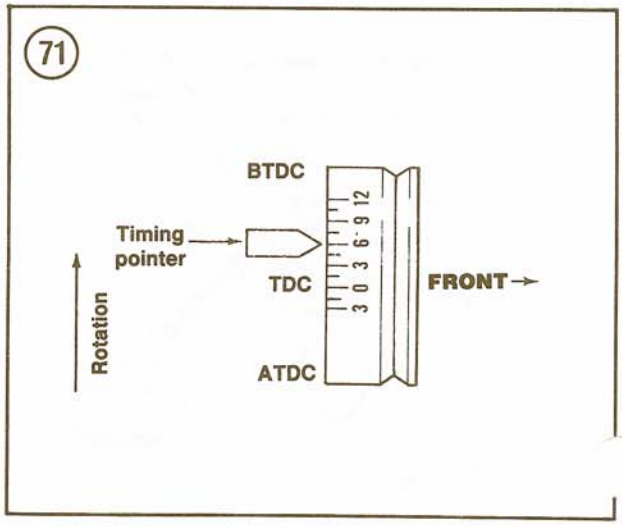

ael injected 4-cylinder and all V6 engines

The V6 engine is equipped with a camshaft-driven Universal distributor. The 1983-1984 V6 distributor cap is retained to the distributor adapter by spring clamps. The 1985-on 4-cylinder and V6 distributor cap is held in place by 2 screws.

To inspect the cap and rotor, unsnap the 2 clamps or loosen the 2 screws and remove the cap. Loosen the 2 rotor screws and lift the cap straight up and out of the housing. Check for the same defects as described for carburetted 4-cylinder engines.

Ignition Timing

Ignition timing on all 1983-1984 engines and 1985 and later 2.0L engines is electronically set at the factory by computer. The Torx head bolt used to secure the hold-down bracket indicates that timing has been computer-established and requires no adjustment unless the distributor has been removed from the engine for service (Chapter ght).

Ignition timing on 1985 and later 2.3L and V6 engines is controlled by the EEC-IV microprocessor. There is no need to adjust timing unless the distributor has been removed from the engine for service (Chapter Eight).

Use the following procedure to set initial (Dura-Spark II) or base (TFI-IV) timing *only* when the distributor has been removed from the engine and is being reinstalled.

1. Place the transmission in PARK (automatic) or NEUTRAL (manual). Make sure the air conditioning and heater are off.
2. Dura-Spark II ignition—Disconnect and plug the vacuum line(s) at the distributor vacuum advance unit.
3. Connect an inductive (clamp-on) timing light and tachometer to the engine according to the manufacturer's instructions. Refer to **Figure 61** (4-cylinder) or **Figure 62** (V6) as necessary for the location of the No. 1 cylinder plug wire (its location is also stamped on the distributor cap).
4. Check the VECI decal to determine whether the ignition uses a Universal Ignition Module (high-altitude) or TFI-IV (EEC-IV) module, if this formation is not already known.

Dura-Spark II ignition—If the engine is a high-altitude calibration equipped with a barometric pressure switch, disconnect the switch at the ignition module. Connect a jumper wire between the yellow and black wires at the ignition module connector pins.

6. TFI-IV ignition—Disconnect the single wire connector near the distributor. Refer to the VECI decal in the engine compartment and disconnect any other leads as specified.
7. 1983-1984 4-cylinder—Run the engine at normal idle. Check the idle speed and compare to the specification provided on the VECI decal in the engine compartment. If idle speed is not correct, see *Idle Speed Adjustment* in this chapter.
8. Shut the engine off, locate the timing mark on the crankshaft pulley and mark it with white paint. See **Figure 71** (typical).

WARNING

Keep your hands and hair clear of all drive belts and pulleys. Although they seem to be standing still, they are actually spinning at more than 10 times per second and can cause serious injury.

9. Start the engine and let it idle. Point the timing light at the marks. They will appear to stand still or waver slightly under the light.
10. If adjustment is necessary, loosen the distributor hold-down bolt with an appropriate size Torx head driver (Dura-Spark II) or with distributor lockbolt wrench part No. T82L-12270-A (TFI-IV). See **Figure 72** (typical).

WARNING

Never touch the distributor's thick wires when the engine is running. This can cause a painful shock, even if the insulation is in perfect condition.

11. Grasp the distributor cap and rotate the body clockwise or counterclockwise as required to align the timing marks to specifications. Tighten the distributor hold-down bolt snugly without disturbing the distributor position and recheck the timing.
12. Shut the engine off and remove the test equipment.
13. Dura-Spark II ignition—On high-altitude calibrations, remove the jumper wire and reconnect the ignition module connector to the module.
14. TFI-IV ignition—Reconnect the single wire connector at the distributor.

15. Dura-Spark II ignition—Unplug and reconnect the vacuum hose(s) at the distributor vacuum advance unit.
16. Perform any other steps specified on the VECI decal.

Idle Speed Adjustment

The following procedure applies only to 4-cylinder engines equipped with a Carter 1-bbl. carburetor. The Aisan carburetor uses an idle speed control (ISC) which automatically controls idle and fast idle speeds on directions from an electronic module.

Carburetted 4-cylinder engine (except 2.0L with Aisan carburetor)

1. Place the transmission in PARK (automatic) or NEUTRAL (manual) and block the drive wheels.
2. Start the engine and warm to normal operating temperature (upper radiator hose hot). Make sure the air conditioning is off.
3. Refer to the VECI decal in the engine compartment and place the transmission in the specified gear range, if it differs from Step 1.
4. Connect a tachometer to the engine according to manufacturer's instructions.
5. Refer to the VECI label for the correct curb idle rpm setting. Adjust curb idle by rotating the hex head adjustment nut at the rear of the TSP housing on the carburetor (**Figure 73**).
6. Return the transmission to PARK (automatic) or NEUTRAL (manual) and momentarily increase engine speed. Place the transmission in the specified position and recheck the curb idle speed. Readjust as required.
7. Return the transmission to PARK or NEUTRAL and disconnect the electrical wiring at the throttle position sensor (TPS). Refer to the VECI decal and check the TPS-OFF rpm specification. Adjust the TPS-OFF rpm by turning the adjusting screw on the throttle shaft lever (**Figure 73**).
8. If equipped with a dashpot, check the clearance between the dashpot plunger and throttle actuating lever with a feeler gauge and compare to the specified clearance provided on the VECI decal. Adjust dashpot clearance by loosening the nut shown in **Figure 74** and rotating the dashpot body until the desired clearance is obtained.
9. Shut the engine off and remove the test equipment.

Carburetted V6 engine

The 2150A carburetor used on the 2.8L V6 engine is fitted with a servo motor idle speed control (**Figure 75**). This device automatically controls the kickdown idle speed and idle speed as

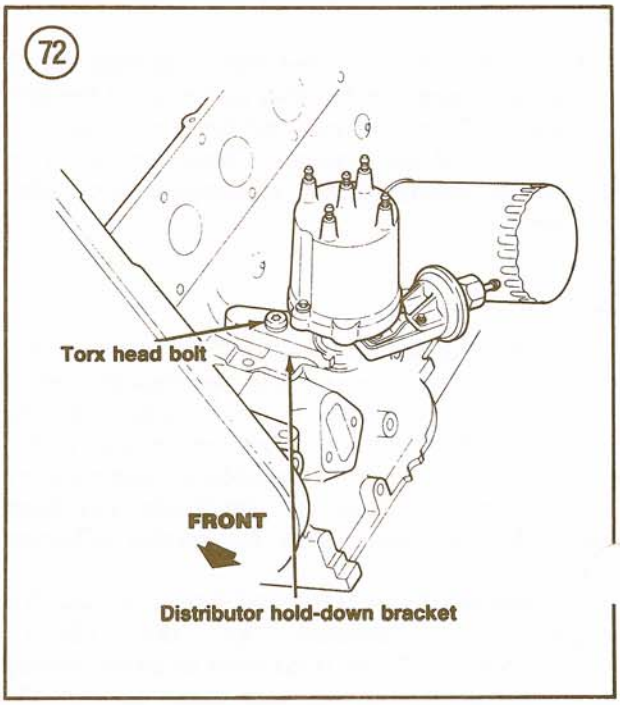

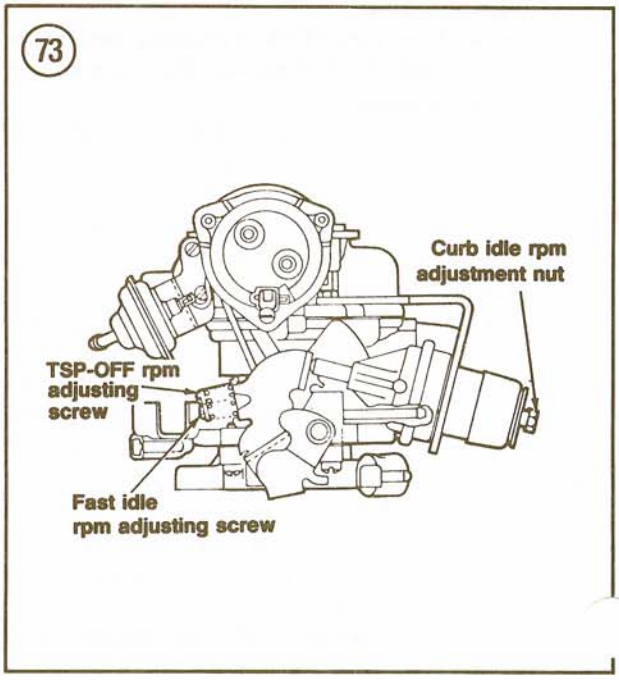

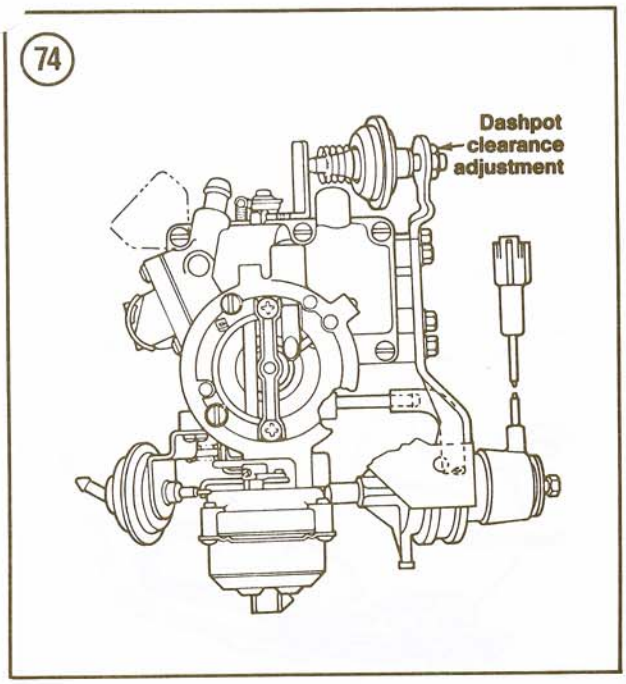

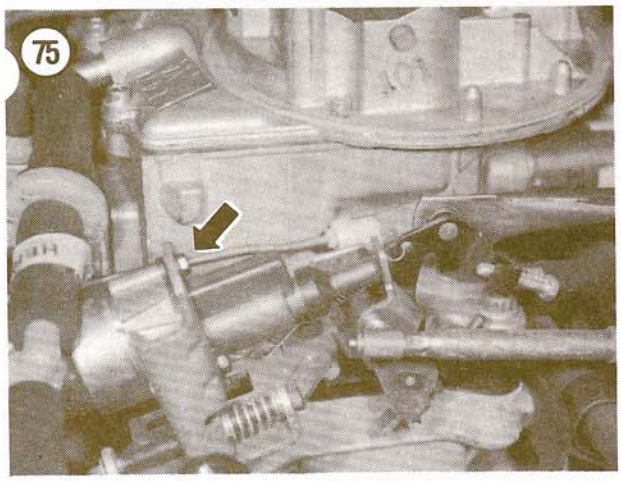

directed by the EEC-IV microprocessor. Idle and fast idle speed adjustments are not required.

Fuel injected engine

No attempt should be made to adjust the idle speed on 4-cylinder and V6 engines equipped with fuel injection. A throttle air bypass valve mounted on the throttle body maintains the correct idle speed according to electrical impulses from the EEC-IV microprocessor. Attempting to adjust the system will only make matters worse. If idle speed requires adjustment, see your Ford dealer.

Idle Mixture Adjustment

The idle mixture screw is located under a plug seal on all carburetors in accordance with Federal regulations governing unauthorized adjustment. The carburetors are flow-tested and pre-set at the factory. Idle mixture on fuel injected engines is controlled by the EEC-IV microprocessor. If the idle mixture requires adjustment for any reason, see your Ford dealer.

Fast Idle Adjustment

Carburetted 4-cylinder engine (except 2.0L with Aisan carburetor)

1. Set the parking brake and place the transmission in PARK (automatic) or NEUTRAL (manual).
2. Start the engine and warm to normal operating temperature (upper radiator hose hot), then shut the engine off.
3. Turn the air conditioning OFF, if so equipped.
4. Disconnect and plug the vacuum line at the EGR valve.
5. Refer to the VECI decal in the engine compartment and place the fast idle screw on the specified step of the fast idle cam. See **Figure 73**.
6. Connect a tachometer to the engine according to manufacturer's instructions.
7. Start the engine without depressing the throttle pedal. Check the fast idle rpm and compare to the VECI decal specifications. If adjustment is necessary, turn the fast idle screw clockwise or counterclockwise as required to bring the fast idle rpm into specification.
8. Momentarily increase engine rpm, then allow the engine to return to curb idle. Shut the engine off.
9. Unplug the EGR vacuum line and reconnect it to the EGR valve. Remove the tachometer.

Carburetted V6 engine

A fast idle speed adjustment is not required. See *Idle Speed Adjustment* in this chapter.

Fuel injected engine

The fast idle speed is controlled by the EEC-IV microprocessor and cannot be adjusted.

DIESEL ENGINE TUNE-UP

Diesel engines do not require a tune-up in the same sense as a gasoline engine, primarily because the diesel engine uses compression for ignition instead of an electrical ignition system. Fewer maintenance tasks are thus required on a diesel engine, but the required tasks are just as important, if not more so, than the more extensive gasoline engine maintenance. The required tasks and the intervals at which they should be performed are given in **Tables 2-4**. Any tasks not described in the following section can be found under *Scheduled Maintenance* in this chapter.

Owner maintenance on diesel engines should be limited to the tasks listed in **Tables 2-4**. Tampering by an unskilled mechanic, especially with the injection system, can lead to serious and expensive damage.

CAUTION

The injection pump used on a diesel engine is built to exacting tolerances. It is very important to keep water from reaching the pump and injection nozzles, as it can cause expensive damage. For this reason, Ford Motor Co. does not recommend washing the diesel engine. If you must wash it, do so only when it is cold and not running. Take precautions to prevent water or cleaning solutions from reaching the injection pump and nozzles.

Fuel Requirements

Use only No. 2 diesel fuel when the ambient temperature is above 20° F. Use only winterized No. 2 diesel or No. 1 diesel fuel when the temperature is below 20° F. Never use any other diesel fuels and/or fuel additives.

CAUTION

Never use diesel fuel which has been stored in a galvanized container. The zinc in the metal plating will be dissolved by the fuel and can cause serious damage if it gets into the injection pump or nozzles.

WARNING

Never use ether or similar starting fluids in the diesel engine. The glow plugs may ignite the fluid and cause serious engine damage or personal injury.

Engine Oil Change

Use only oil recommended for diesel engine service by Ford Motor Co. This will be plainly marked on the oil can by a letter code. API designation SF/CD is recommended. An oil not marked with this code will not provide the protection necessary for diesel engines and its use could lead to engine damage. See *Engine Oil and Filter* in this chapter for oil change instructions and **Tables 2-4** for oil change intervals.

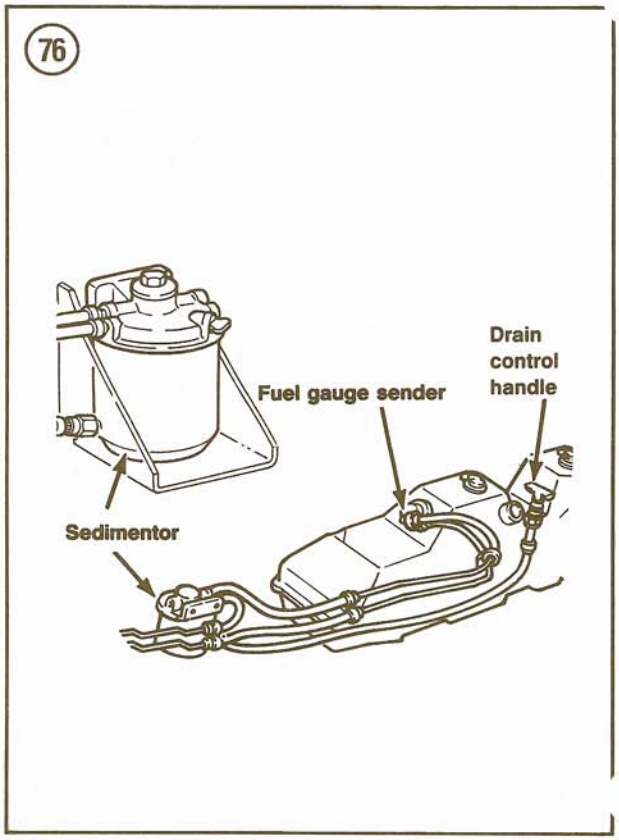

Engine Oil Filter Replacement

The 2.2L diesel engine uses a main oil filter and a bypass oil filter. The 2.3L turbo diesel uses only a main oil filter. The same main oil filter is used on both engines (Motorcraft FL-786 or equivalent) and should be replaced at every oil change. The 2.2L bypass oil filter (Motorcraft FL-785 or equivalent) should be replaced at alternate oil changes. See *Engine Oil and Filter* in this chapter for instructions.

Fuel Filter

The 2.2L fuel filter is a part of the priming pump assembly located behind the injection pump and

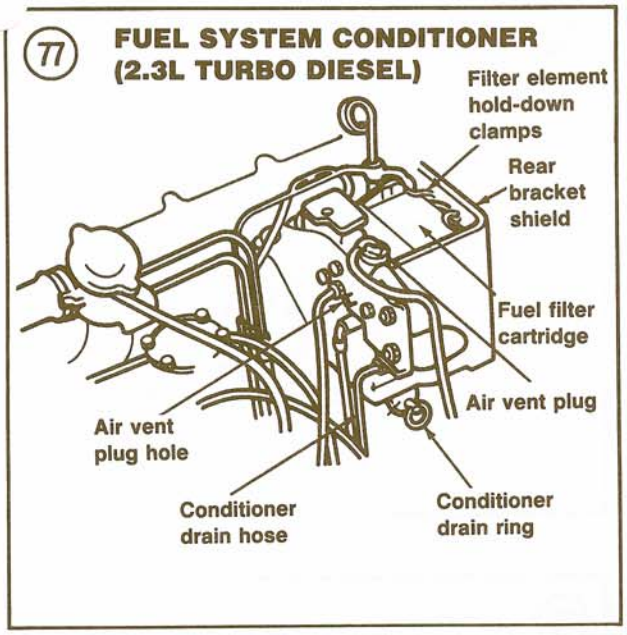

above the starter motor (**Figure 47**). The 2.3L turbo diesel uses two fuel filters. An in-line filter is positioned on the left side frame rail about 2 feet behind the fuel boost pump (**Figure 48**). A second filter is part of the fuel conditioner which is bracket-mounted to the engine (**Figure 49**). The fuel filter should be changed at the interval stated in **Tables 2-4**. See *Fuel Filter, Diesel Engine* in this chapter.

Fuel System Sedimentor (2.2L Diesel)

A sedimentor assembly bolted to the left-hand frame rail (**Figure 76**) removes water from the fuel. When water accumulation reaches a specified level in the sedimentor, a float mechanism in the unit causes a warning lamp on the instrument panel to light.

NOTE

This warning lamp will light momentarily whenever the ignition key is turned to the START position. This serves as a test of the lamp circuit.

When the warning lamp comes on and stays on, the sedimentor should be drained.

1. Turn the engine off. Make sure the fuel tank is at least 1/4 full.
2. Place a suitable container beneath the sedimentor assembly.
3. Reach behind the driver's seat and locate the drain control handle (**Figure 76**). Pull up on the handle to open the sedimentor drain valve. Keep the handle in this position for at least 45 seconds after the instrument panel warning lamp has gone out, then release it.
4. Check under the sedimentor to make certain that the draining process has completely stopped. A leak at this point can empty the fuel tank.
5. If the sedimentor has not stopped draining, reactivate the handle briefly. If this does not stop the draining process, return the vehicle to a dealer as soon as possible.
6. Properly dispose of the drained fuel.

Fuel System Conditioner (2.3L Turbo Diesel)

Water must be drained from the fuel conditioner whenever the instrument panel warning lamp comes on or at the interval specified in **Table 4**. A "WATER-IN-FUEL" lamp will glow when approximately one pint of water has accumulated in the fuel conditioner. To drain the fuel conditioner:

1. Place a suitable container under the fuel conditioner located at the left rear side of the engine. See **Figure 77**.
2. Pull and hold the conditioner ring extended until the draining fluid is free of water.
3. Release the conditioner ring and make sure that the draining process has completely stopped. A leak at this point can empty the fuel tank.
4. If the conditioner has not stopped draining, reactivate the pull ring briefly. If this does not stop the draining process, return the truck to a dealer as soon as possible.
5. Wipe up any spilled fuel and remove the container. Properly dispose of the drained fuel.

Valve Clearance Adjustment

The valves should be adjusted every 15,000 miles as a part of scheduled maintenance. Valves should be adjusted with the engine off but only after it has been run for at least 30 minutes.

2.2L diesel

1. Remove the valve cover.

2. Check head bolt torque in the sequence shown in **Figure 78**. It should be 80-85 ft.-lb. (110-117 N•m).
3. Rotate the crankshaft to align the yellow timing mark on the pulley with the timing pointer on the front cover. See **Figure 79**.
4. Check the clearance of valves No. 1, 2, 3 and 6 (**Figure 80**). Insert a 0.012 in. (0.30 mm) flat feeler gauge between the lifter heel and the end of the valve stem (**Figure 81**). If adjustment is required, turn the adjuster nut until the clearance is correct.
5. Rotate the crankshaft one full turn. Check the clearance of valves No. 4, 5, 7 and 8 (**Figure 80**) and adjust if necessary.
6. Reinstall the valve cover.

2.3L turbo diesel

1. Remove the valve cover.
2. Remove the timing belt upper cover.
3. Rotate the crankshaft to align the timing mark on the pulley with the timing pointer on the front cover. The injection pump and camshaft sprockets should also align with their timing marks. If they do not, rotate the crankshaft one full turn.
4. Check the clearance of the No. 1 and No. 2 intake and the No. 1 and No. 3 exhaust valves (**Figure 82**). Insert a 0.10 in. (0.25 mm) flat feeler gauge between the lifter heel and the end of the

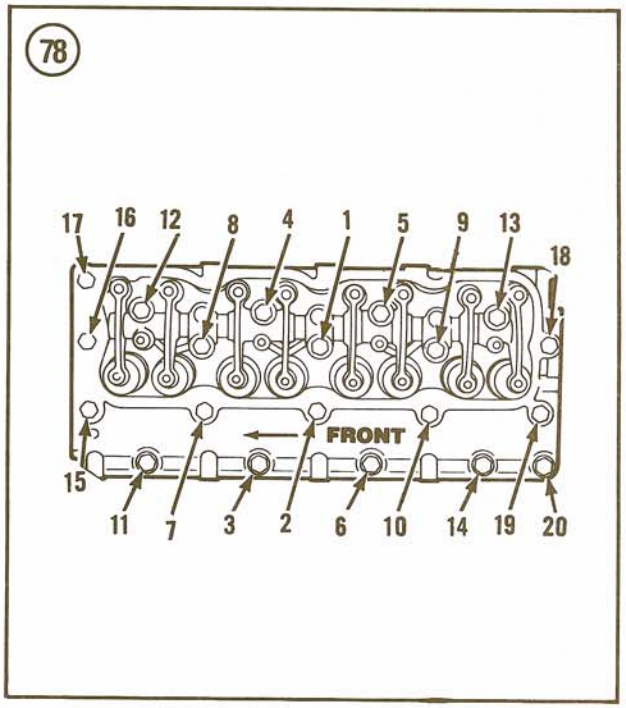

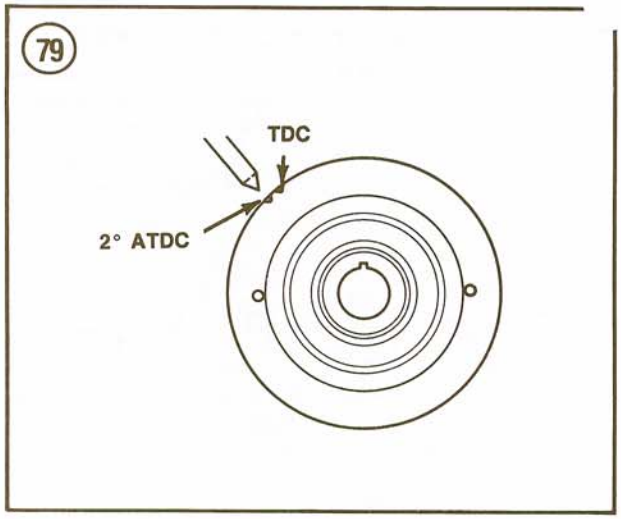

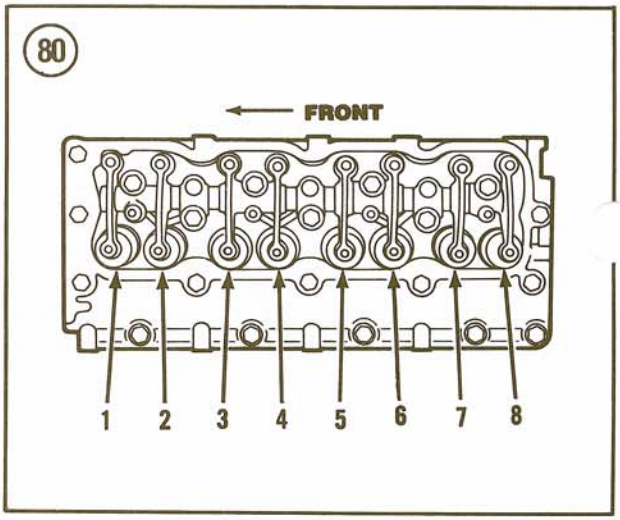

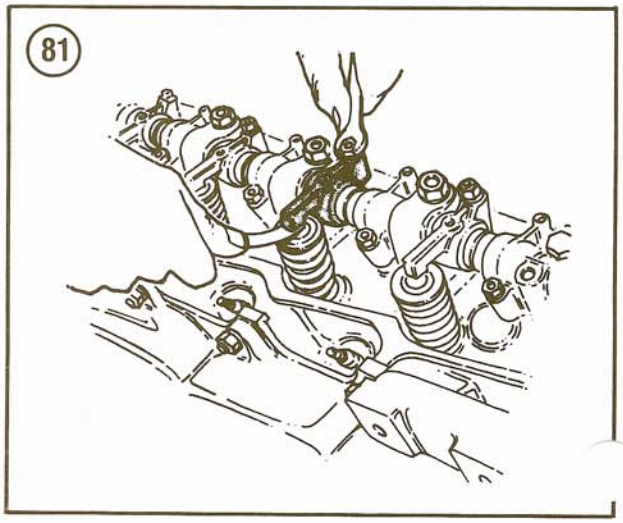

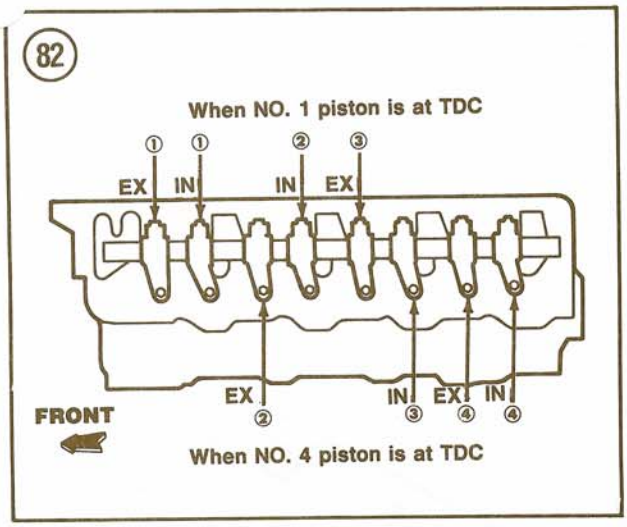

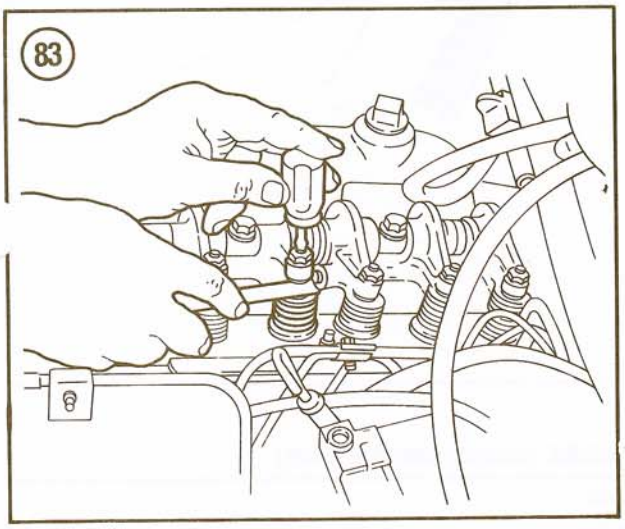

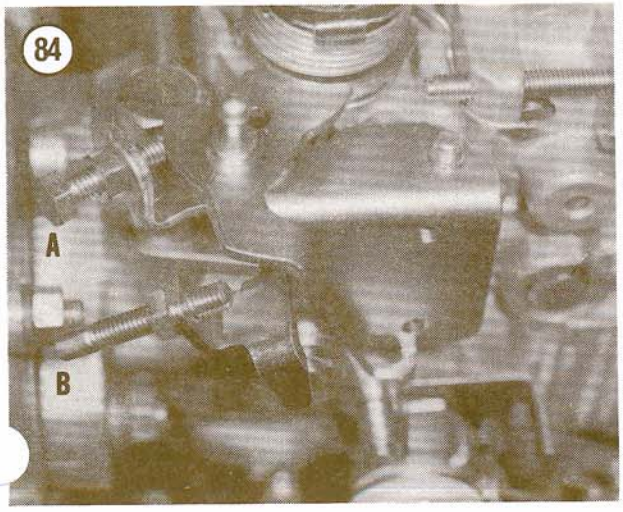

valve stem. If adjustment is required, loosen the adjusting screw locknut. Turn the adjuster screw clockwise (to reduce clearance) or counterclockwise (to increase clearance) as required. See **Figure 83**. Hold screw in place, tighten locknut and recheck clearance.

5. Rotate the crankshaft one full turn. Check the clearance of the No. 3 and No. 4 intake and the No. 2 and No. 4 exhaust valves (**Figure 82**). Adjust if necessary following the procedure in Step 4.

6. Reinstall the timing belt upper cover. Reinstall the valve cover.

Idle Speed Adjustment

2.2L diesel

NOTE

A special photoelectric tachometer (Ford part No. 99-00001 or equivalent) must be used on diesel engines. Most tachometers for gasoline engines operate from the electrical ignition system impulses and will not work on diesel engines.

The photoelectric tachometer measures engine rpm by directing a light beam at a piece of reflective tape applied on the rear flange rim of the crankshaft pulley. The tachometer must be held within 30 inches of the pulley to operate properly.

1. Thoroughly clean a small area on the rear flange of the crankshaft pulley and apply a piece of reflective tape provided with the photoelectric tachometer. Take care in applying the tape not to overlap it onto the drive belt. The tape provides a signal for the tachometer.
2. Start the engine and place the transmission in NEUTRAL.
3. Point the photoelectric tachometer at the reflective tape on the crankshaft pulley. The tachometer should indicate an idle speed of 780-830 rpm.
4. If idle speed adjustment is required, loosen the idle adjusting bolt locknut on the injection pump (A, **Figure 84**). Turn the bolt clockwise to increase or counterclockwise to decrease idle speed. Tighten the locknut.
5. Rev the engine several times and recheck the idle speed setting with the photoelectric tachometer. Repeat Step 4 if idle speed is not within the 780-830 rpm specification.
6. Shut the engine off.

2.3L turbo diesel

Linkage adjustments are pre-set, sealed with paint and are not serviceable. If idle speed adjustment is required, see your dealer.

Fast Idle (Cold Start)
Adjustment

2.2L diesel

1. Check idle speed as described in this chapter and adjust as required.
2. Pull out the cold start operating knob (**Figure 85**) located under the instrument panel and rotate clockwise to lock it in place.
3. Start the engine and check engine rpm with the photoelectric tachometer. The tachometer should indicate 1,150-1,250 rpm.
4. If fast idle speed adjustment is required, loosen the locknut on the injection pump fast idle speed screw (B, **Figure 84**). Adjust the fast idle speed to specification, then tighten the locknut.
5. Recheck the fast idle speed with the photoelectric tachometer and readjust if required.
6. Shut the engine off.

2.3L turbo diesel

Linkage adjustments are pre-set, sealed with paint and are not serviceable. If idle speed adjustment is required, see your dealer.

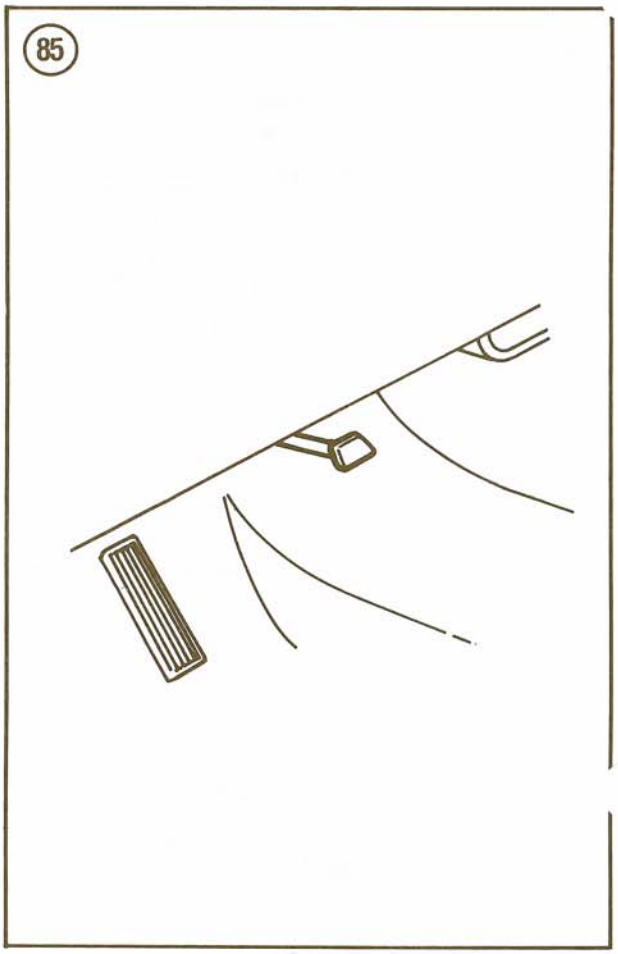

Table 1 SCHEDULED MAINTENANCE (GASOLINE ENGINE)

Every 7,500 miles or 12 months	• Change engine oil [1] • Change oil filter [1] • Lubricate rear axle double cardan joint [2] • Lubricate front axle, drive shaft • U-joints and slip yoke [2] • Check/adjust wheel lug nut torque
At first 7,500 miles	• Check idle speed [3]
At first 7,500 miles, then every 30,000 miles	• Check drive belt condition and tension • Check/adjust valve clearance [4]
Every 12 months	• Check coolant condition and protection • Check cooling system hoses and clamps
Every 30,000 miles	• Replace spark plugs [1] • Replace air cleaner filter • Replace crankcase vent filter • Clean choke linkage • Check disc brakes • Check hydraulic clutch reservoir fluid level

(continued)

Table 1 SCHEDULED MAINTENANCE (GASOLINE ENGINE) (continued)

Every 30,000 miles (continued)	• Check drum brakes, hoses and lines • Check/lubricate front wheel bearings [2] • Check/lubricate spindle needle and thrust bearings [2] • Check hub lock lubricant [2] • Lubricate front drive axle right hand axle shaft slip yoke [2] • Check exhaust system components
Every 36 months or 52,500 miles	• Drain, flush and refill cooling system

1. SEVERE SERVICE OPERATION: If the vehicle is used under any of the conditions listed below, change the engine oil and filter every 3,000 miles or 3 months, clean and regap spark plugs every 6,000 miles and change automatic transmission fluid at 22,500 mile (1983) or 30,000 mile (1984-on) intervals:
   a. Extended periods of high-speed operation during hot weather.
   b. Frequent short trips of 10 miles or less.
   c. Operation under severe dust conditions.
   d. Trailer towing.
   e. Extensive idling.
2. If the vehicle is used off-road, the maintenance schedule should be performed every 1,000 miles. If the vehicle is operated in must and/or water, the maintenance schedule should be performed daily.
3. 4-cylinder carburetted engine only.
4. 2.8L V6 only.

Table 2 SCHEDULED MAINTENANCE (1983 DIESEL ENGINE)

Every 5,000 miles (5 months)	• Change engine oil[1] • Change main oil filter[1] • Drain sedimentor[2] • Check/adjust wheel lug nut torque
Every 10,000 miles (10 months)	• Change bypass oil filter
Every 12 months	• Check coolant condition and protection • Check cooling system hoses and clamps
Every 15,000 miles (15 months)	• Check drive belt tension • Adjust engine valve clearance
Every 30,000 miles or (30 months)	• Replace air cleaner element[2] • Replace fuel filter[2] • Inspect brake system • Inspect front wheel bearings • Check clutch reservoir fluid level • Inspect exhaust system

1. SEVERE SERVICE OPERTION: If the vehicle is operated under any of the following conditions, change engine oil and main oil filter @ 3,000 miles or 3 month intervals and bypass oil filter @ alternate oil changes.
   a. Extended idle or low-speed operation (short trips, stop-and-go driving).
   b. Trailer towing.
   c. Operation @ temperatures below 10° F for 60 days or more, with most trips under 10 miles.
   d. Sustained high-speed driving in hot weather.
   e. Very dusty conditions or off-road driving.
2. More frequent intervals may be required depending upon fuel quality and vehicle usage.

Table 3 SCHEDULED MAINTENANCE (1984 DIESEL ENGINE)

Every 5,000 miles or 6 months	• Change engine oil and full flow filter* • Drain water from fuel sedimentor • Check wheel lug nut torque
Every 10,000 miles	• Change bypass oil filter*
Every 15,000 miles	• Check and adjust drive belts • Adjust valve clearance
Every 12 months	• Check cooling system components • Check coolant condition
Every 30,000 miles	• Check air cleaner hoses • Replace air cleaner element* • Replace secondary fuel filter • Inspect brake system • Check hydraulic clutch reservoir fluid level • Repack and adjust front wheel bearings • Lubricate drive shaft slip yoke and U-joint grease fitting • Check exhaust system components

* SEVERE SERVICE OPERATION: If the vehicle is used under any of the conditions listed below, change the engine oil, oil filters and air cleaner filter every 3,000 miles or 3 months and automatic transmission fluid @ 20,000 mile intervals:

a. Extended periods of high-speed operation during hot weather.
b. Frequent short trips of less than 10 miles.
c. Operation under severe dust conditions.
d. Trailer towing.
e. Extensive idling.

Table 4 SCHEDULED MAINTENANCE (1985-ON DIESEL ENGINE)

Every 5,000 miles or 6 months	• Change engine oil and filter [1] • Drain fuel conditioner [2] • Check wheel lug nut torque
Every 12 months	• Check coolant condition and protection • Check cooling system hoses and clamps
Every 15,000 miles	• Check drive belt condition and tension • Adjust valve clearance
Every 30,000 miles	• Replace air cleaner filter [1] • Check air cleaner and turbocharger inlet hose condition [3] • Replace fuel filter [3] • Inspect brake system • Inspect front wheel bearings • Check hydraulic clutch reservoir fluid level • Check exhaust system components
Every 36 months or 50,000 miles	• Drain, flush and refill cooling system
Every 50,000 miles	• Have all timing belts replaced

1. SEVERE SERVICE OPERATION: If the vehicle is used under any of the conditions listed below, change the engine oil every 2,000 miles or 2 months, the oil filter every 4,000 miles or 4 months and the air cleaner filter every 3,000 miles or 3 months.
   a. Extended periods of high-speed operation during hot weather.
   b. Frequent short trips of 10 miles or less.
   c. Operation under severe dust conditions.
   d. Trailer towing.
   e. Extensive idling.
2. Fuel quality and vehicle usage dictates interval according to instrument panel warning light.
3. More frequent intervals may be required if used in extremely dusty conditions.

Table 5 OIL VISCOSITY (GASOLINE ENGINE)

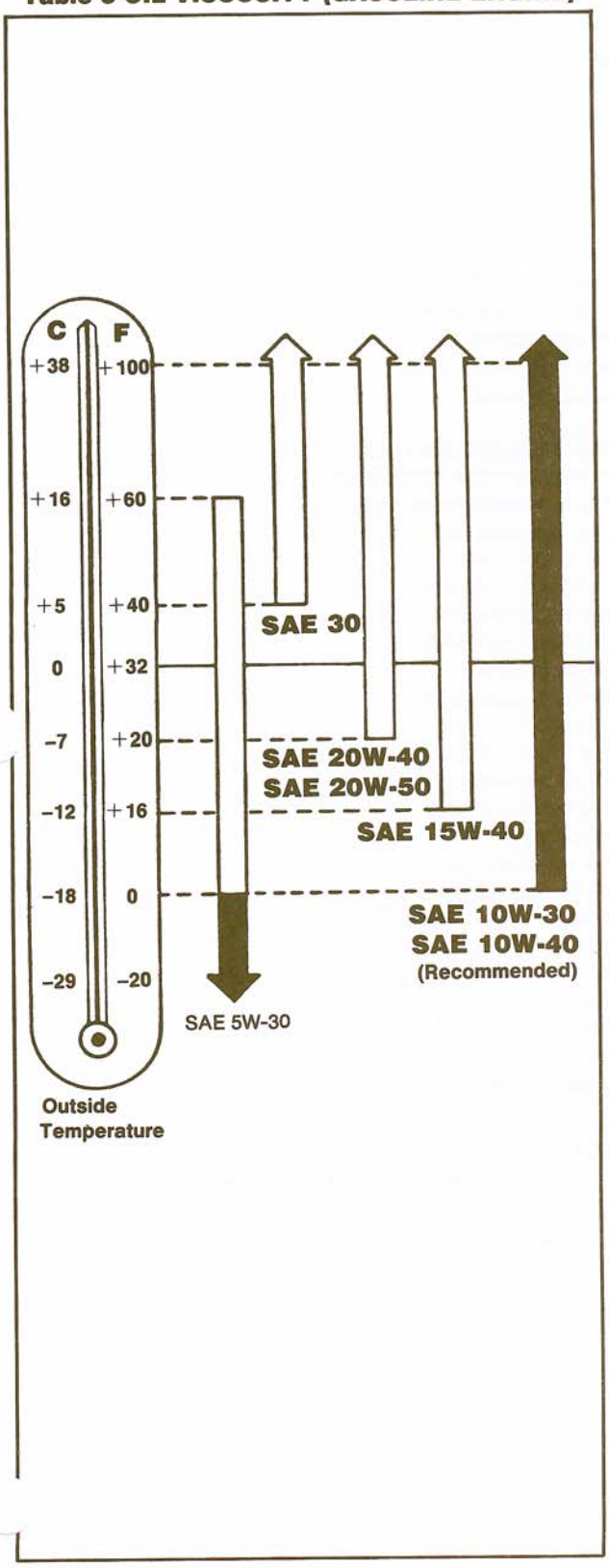

Table 6 OIL VISCOSITY (DIESEL ENGINE)

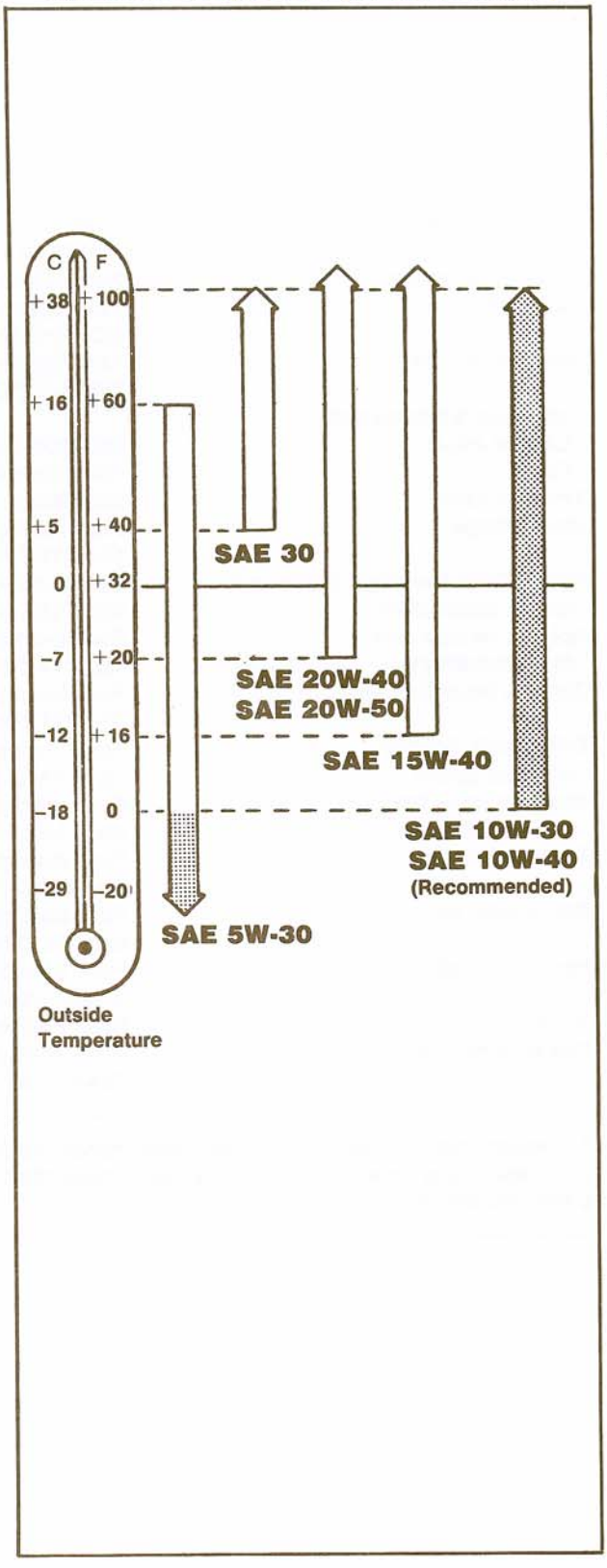

Table 7 RECOMMENDED LUBRICANTS

Crankcase	
Gasoline engine	API Service SF oil
Diesel engine	API Service SF/CD oil
Engine coolant	Ford cooling system fluid or equivalent meeting Ford spec. ESE-M97B44-A
Brake fluid	Ford Heavy-Duty or other DOT 3 or DOT 4 fluid
Power steering pump	Motorcraft Type F automatic transmission fluid
Manual steering gearbox	Ford multi-purpose lubricant part No. C1AZ-19590-B or equivalent
Manual transmission	Ford lubricant part No. D8DZ-19C547-Af or equivalent
Rear axle	Ford hypoid gear lubricant part No. EOAZ-19580-A or equivalent [1]
Front drive axle	Ford hypoid gear lubricant part No. C6AZ-19580-E or equivalent [2]
Automatic transmission	
C3 and A4LD	DEXRON II automatic transmission fluid
C5	Ford Type H automatic transmission fluid
Transfer case	DEXRON II automatic transmission fluid
Shift linkage	Ford multi-purpose lubricant part No. C1AZ-19590-B or equivalent
Front wheel bearings, brake and clutch pedal shaft	Ford multi-purpose lubricant part No. C1AZ-19590-B or equivalent
Spindle needle and thrust bearings	Ford multi-purpose lubricant part No. C1AZ-19590-B or equivalent
Throttle lever ball stud	Ford multi-purpose lubricant part No. C1AZ-19590-B or equivalent
Drive shaft, U-joint and slip spline	Ford multi-purpose lubricant part No. C1AZ-19590-B or equivalent
Transfer case front output slip yoke	Ford multi-purpose lubricant part No. C1AZ-19590-B or equivalent
Front axle hubs	Ford multi-purpose lubricant part No. C1AZ-19590-B or equivalent
Disc brake caliper	Ford disc brake caliper slide grease part No. D7AZ-19590-A or equivalent
Hood latch, all hinges	Ford polyethylene grease part No. D7AZ-19584-A or equivalent
Windshield washer	Ford washer solvent part No. C9AZ-19550-A or B
Key lock cylinders	Ford lock lubricant part No. D8AZ-19587-A or equivalent

1. Limited slip rear axle—add 4 oz. Ford friction modifier part No. C8AZ-19B546-A.
2. Limited slip front axle—add 2 oz. (1983-1984) or 1 oz. (1985-on) Ford friction modifier part No. C8AZ-19B546-A.

Table 8 APPROXIMATE REFILL CAPACITIES

	Quart	Pint
Gasoline engine crankcase		
2.0L 4-cylinder		
With filter change		
1983-1984	4.5	
1985-on	5.0	
Without filter change		
1983-1984	4.0	
1985-on	4.5	
2.3L 4-cylinder		
With filter change		
1983-1984	4.5	
1985-on	6.0	
Without filter change		
1983-1984	4.0	
1985-on	5.5	
V6		
With filter change	5.0	
Without filter change	4.0	
Diesel engine crankcase		
2.2L diesel		
With main filter change	6.4	
With main and bypass filter change	7.0	
2.3L turbo diesel		
With main filter change	7.0	
Automatic transmission		
C5	7.5	
C3	8.0	
A4LD	9.0	
Manual transmission		
1983-1984		3.0
1985-on		3.6
Rear axle		
6 3/4 in. ring gear		3.0
7 1/2 in. ring gear		5.0
8.8 in. ring gear		5.5
Front drive axle	1.0	
Transfer case		
1983-1984		2.0
1985-on		3.0
Cooling system		
Gasoline engine		
4-cylinder		
With air conditioning	7.2	
Without air conditioning	6.5	
V6		
With air conditioning	7.8	
Without air conditioning	7.2	
Diesel engine		
With air conditioning	10.7	
Without air conditioning	10.2	

Table 9 DRIVE BELT TENSION (LB.)

	New	Used [1]	Minimum
Gasoline engine			
1/4 in. V-belt			
1983-1984	50-80	40-60	40
1985-on	50-90	40-60	40
V-rib poly belt			
1983-1984	140-180	130-160	90
1985-on	150-190	140-160	90
Diesel engine [2]			
Fan/alternator	120-160	110-130	90
Vacuum pump	90-130	80-100	60
Accessories	150-190	140-160	90

1. A belt is considered used after 10 minutes of operation.
2. Figures given are for a cold engine. Add 20 lb. if engine is warm.

CHAPTER FOUR

4-CYLINDER ENGINE

NOTE

This chapter contains only removal/installation service information for diesel engines. Service to diesel engines by amateur mechanics is not recommended.

All 2-wheel drive vehicles are available with either a 2.0L (122 cid) or 2.3L (140 cid) inline 4-cylinder overhead cam gasoline engine. Both engines are similar to the 2.3L engine used in passenger cars but have a redesigned head and camshaft. A 2.2L (135 cid) diesel inline 4-cylinder engine is optional in 1983-1984 2-wheel drive vehicles; a 2.3L (140 cid) turbo diesel inline 4-cylinder engine is optional in 1985-on 2-wheel drive models. The 4-wheel drive vehicles are available only with the 2.3L gasoline engine.

Both the 2.0L and 2.3L engines use a lightweight cast iron cylinder block. The crankshaft is supported by 5 main bearings. The No. 3 bearing provides the crankshaft thrust surfaces.

The camshaft is supported by 4 bearings. It operates the valves through pivot-type rocker arms with hydraulic valve lash adjusters at the fulcrum point of the rocker arm. The camshaft is driven from the crankshaft by a cogged belt which also operates an auxiliary shaft. The auxiliary shaft drives the oil pump, fuel pump and distributor. Tension is maintained on the camshaft drive belt by a locked idler pulley riding on the outside of the belt. The water pump, alternator and cooling fan are driven from the crankshaft by a V-ribbed poly belt.

The 2.2L diesel and 2.3L turbo diesel engines are similar in general design and construction to a gasoline engine. The 2.3L turbo diesel uses 2 silent shafts to reduce engine vibration from the crankshaft. Service to diesel engines by amateur mechanics, except for the maintenance procedures given in Chapter Three, is not recommended. Removal/installation procedures are provided for each diesel engine so that you can take it to a specialist for repairs.

Specifications (**Tables 1-3**) and tightening torques (**Tables 4-6**) are at the end of the chapter.

ENGINE IDENTIFICATION

An engine identification label is attached to the front of the timing belt cover. **Figure 1** shows a typical label and location. The label identifies the engine. The change level and engine code number tell if parts are unique to particular engines. This information should be used when ordering parts to assure that the correct parts are furnished.

The 2.0L engine code is C; the 2.3L engine code is A; the 2.2L diesel code is P and the 2.3L turbo diesel code is E. The engine code is the 8th digit/letter of the Vehicle Identification Number (VIN). The VIN is the official identification for title and vehicle registration. The VIN is stamped on a metal Vehicle Identification Plate attached to the top left of the instrument panel (**Figure 2**).

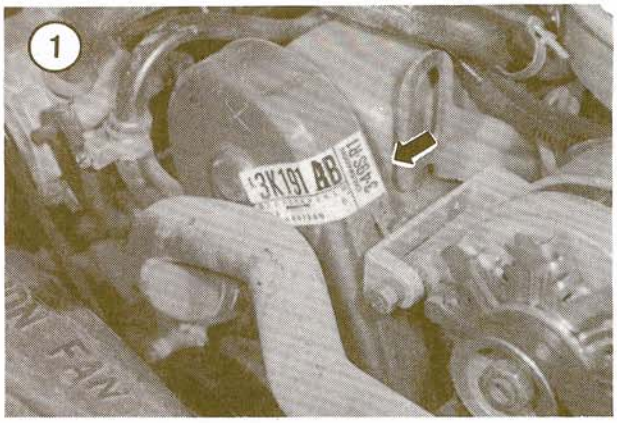

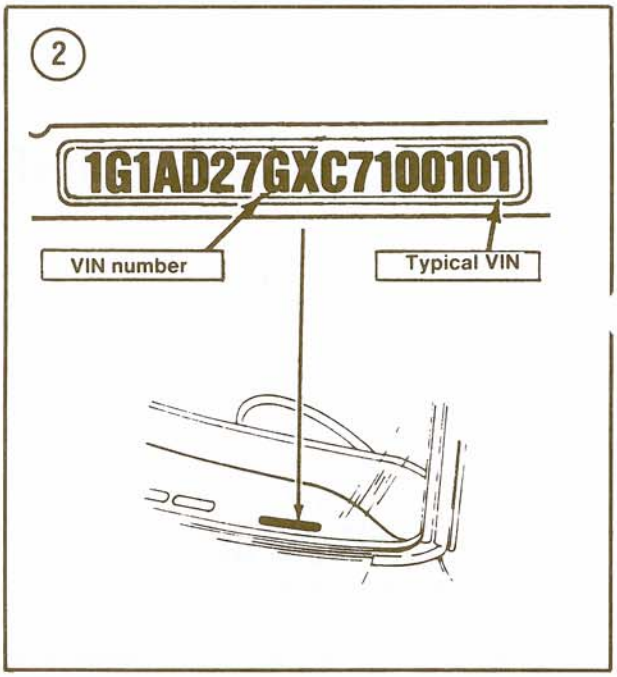

GASOLINE ENGINE REMOVAL

WARNING

The engine is heavy, awkward to handle and has sharp edges. It may shift or drop suddenly during removal. To prevent serious injury, always observe the following precautions.

1. Never place any part of your body where a moving or falling engine may trap, cut or crush you.

2. If you must push the engine during removal, use a board or similar tool to keep your hands out of danger.

3. Be sure the hoist is designed to lift engines and has enough load capacity for your engine.

4. Be sure the hoist is securely attatched to safe lifting points on the engine.

5. The engine should not be difficult to lift with a proper hoist. If it is, stop lifting, lower the engine back onto its mounts and make sure the engine has been completely separated from the vehicle.

WARNING

Before opening any fuel system connections on a fuel injected engine, relieve system pressure as described in Chapter Six.

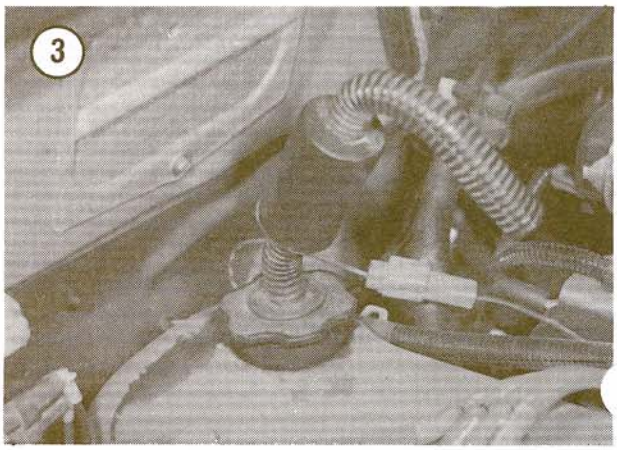

1. Disconnect the negative battery cable at the battery and engine. Disconnect the positive battery cable at the battery.
2. Disconnect the underhood lamp, if so equipped. Mark the location of the hinges and remove the hood.
3. Drain the cooling system. See Chapter Seven.

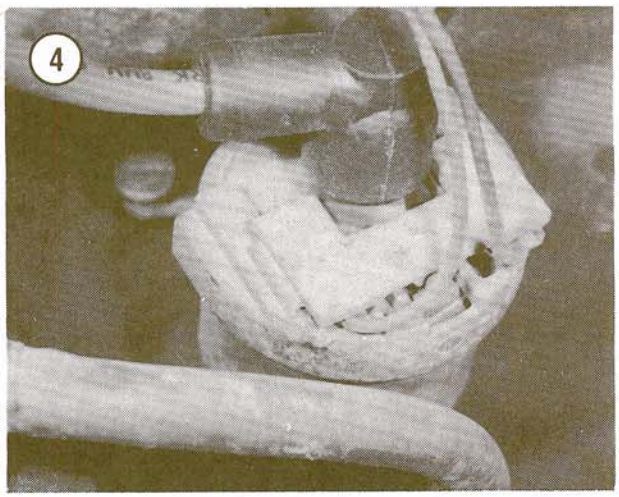

4A. Carburetted engine—Remove the air cleaner and duct assembly. See Chapter Six.

4B. Fuel injected engine—Unclamp and disconnect the air cleaner outlet tube at the throttle body. Disconnect the idle speed control hose and heat riser tube. See Chapter Six.

5. Disconnect the upper and lower radiator hoses at the engine. Remove the radiator shroud screws and upper support. Remove the cooling fan and shroud. Remove the radiator. See Chapter Seven.

6. Remove the oil filler cap (**Figure 3**).

7. Disconnect the primary and secondary leads at the ignition coil. See **Figure 4** (non-TFI coil), typical.

8. Disconnect the oil pressure and coolant temperature sending leads from the sending units. See **Figure 5** for location.

9. Disconnect the electrical leads from the alternator (**Figure 6**) and the starter (**Figure 7**).

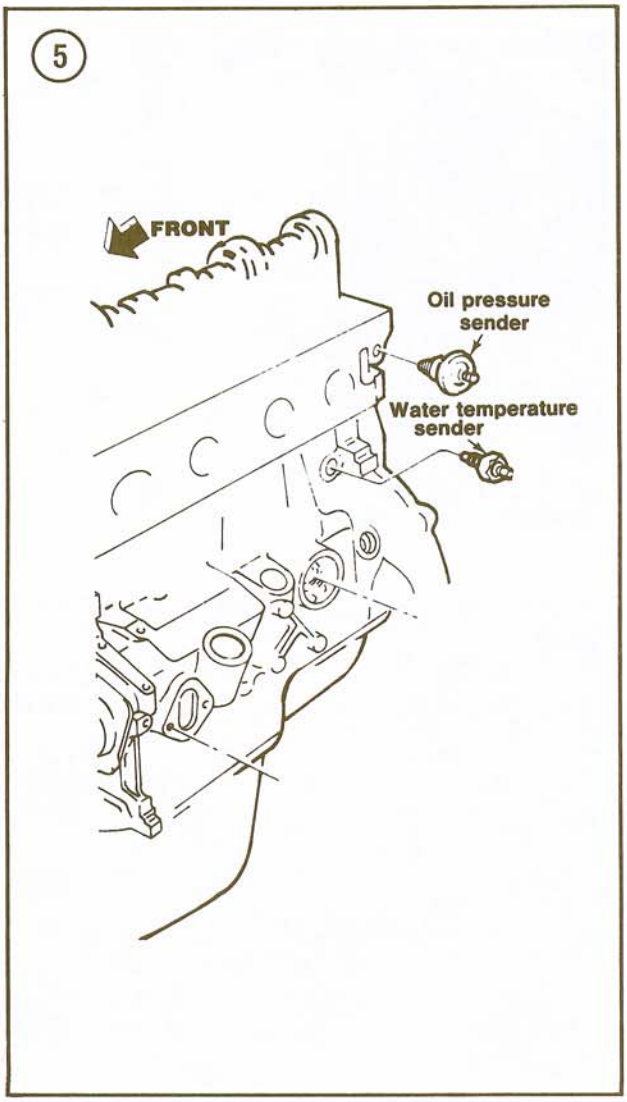

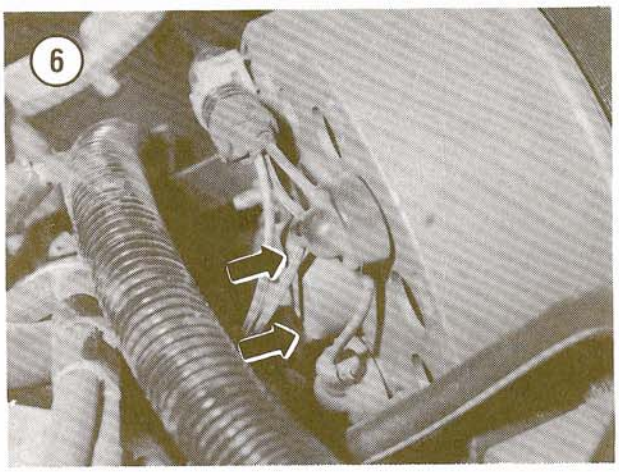

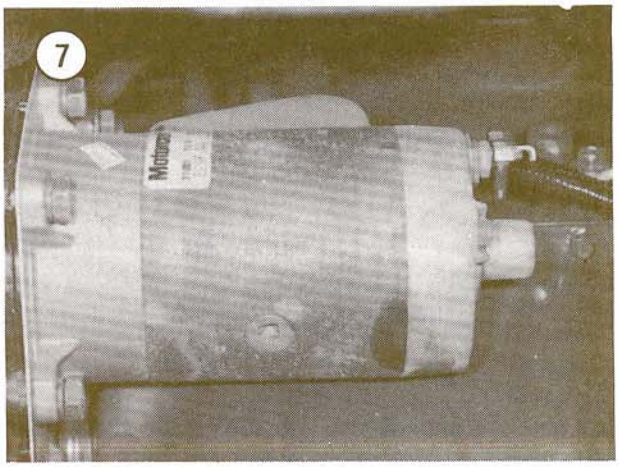

10. Disconnect the throttle cable at the carburetor or throttle body. On automatic transmission models, disconnect the transmission kickdown rod.

WARNING

Do not disconnect air conditioning hoses or lines unless the system has been professionally discharged. The air conditioning system contains refrigerant under pressure which can cause frostbite if it touches skin and blindness if it touches the eyes.

11. On air conditioned models, remove the compressor (**Figure 8**) without disconnecting any refrigerant lines and place it to one side out of the way.
12. If equipped with power steering, remove the power steering pump (**Figure 9**) from its mounting bracket without disconnecting any hydraulic lines and place it to one side out of the way.
13. Disconnect the power brake vacuum hose (**Figure 10**).
14A. Carburetted engine—Disconnect the fuel inlet line at the fuel pump. Cap the line and plug the pump fitting to prevent leakage.
14B. Fuel injected engine—Relieve system pressure and disconnect the 2 push-connect fittings at the fuel rail. See Chapter Six.
15. Disconnect the heater hoses at the engine.
16. Refer to **Figure 11** (2.0L) or **Figure 12** (2.3L) and remove the engine mount nuts.
17. Raise the vehicle with a jack and place it on jackstands.
18. Drain the engine oil from the crankcase. See Chapter Three.
19. Remove the starter motor (**Figure 7**). See Chapter Eight.
20. Disconnect the exhaust inlet pipe at the exhaust manifold.
21A. Manual transmission—Remove the dust cover shield and flywheel housing lower attaching bolts. Remove the hydraulic clutch slave cylinder (Chapter Nine).
21B. Automatic transmission—Remove the converter inspection plate, converter-to-drive plate bolts and converter housing lower attaching bolts.
22. Remove the jackstands and lower the vehicle to the ground.
23. Support the front of the transmission and the flywheel housing (manual) or converter housing (automatic) with a jack to prevent damage to the transmission and to ease removal of the engine.

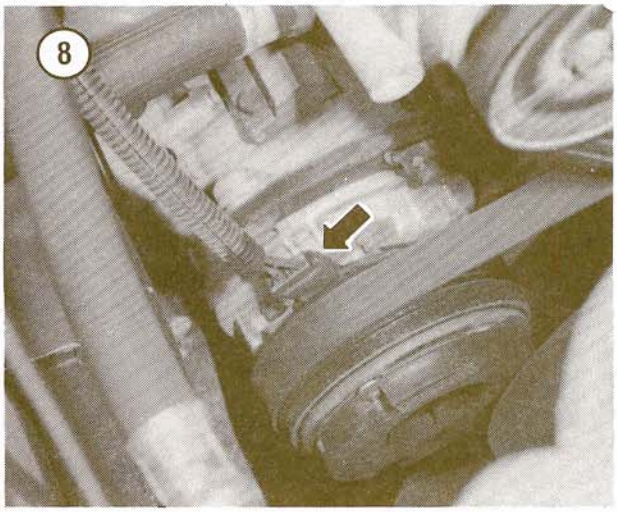

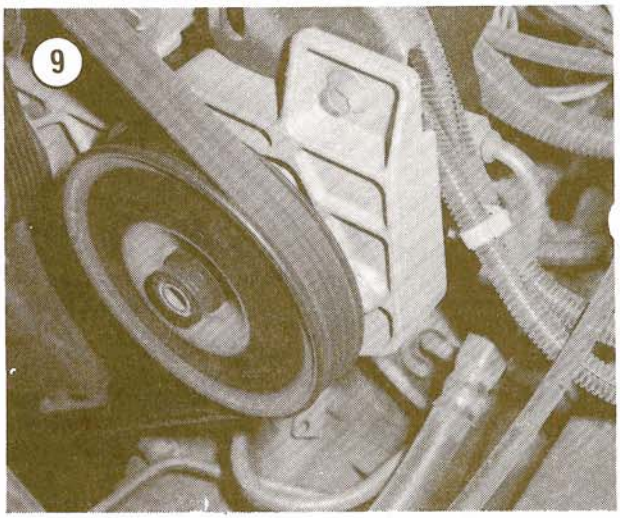

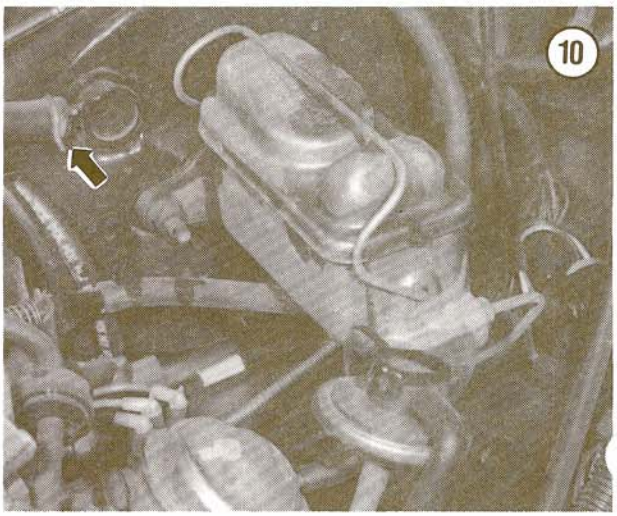

24. Remove the flywheel or converter housing upper attaching bolts.
25. Attach an engine hoist chain or sling to the lifting brackets on the engine. These are located at the left front of the intake manifold and the right rear of the exhaust manifold. Connect the bracket or sling to an engine hoist.

NOTE

At this point, there should be no hoses, wires or linkages connecting the engine to the transmission or body. Recheck to be sure nothing will hamper engine removal and that all accessories, hoses, tubes and wires are positioned out of the way.

26. Raise the engine slightly, then carefully disengage it from the transmission. Remove the engine from the engine compartment with the hoist, tilting it if necessary to prevent damage to the rear cover plate or any other component. Once the engine is clear of the vehicle, lower it to a suitable support or an engine stand. Fasten the engine in the support or stand, then disconnect the hoist and lifting sling or chain. Inspect the rubber motor mounts and insulators for wear or damage. If these conditions exist, replace the mounts or insulators before reinstalling the engine.

GASOLINE ENGINE INSTALLATION

Engine installation is the reverse of removal, plus the following:
1. Lower the engine into the engine compartment carefully.
   a. On automatic transmission models, start the converter pilot into the crankshaft.
   b. On manual tranmission models, engage the transmission input gear splines with the clutch disc splines.
2. Leave the hoist attached and holding the engine weight until the upper flywheel or converter housing bolts are installed.
3. Tighten all fasteners to specifications (**Table 4**).
4. Fill the engine with an oil recommended in Chapter Three.
5. Fill the cooling system. See Chapter Seven.
6. Adjust the drive belts. See Chapter Three.

(11) **FRONT AND REAR ENGINE SUPPORTS (2.0L GASOLINE ENGINE)**

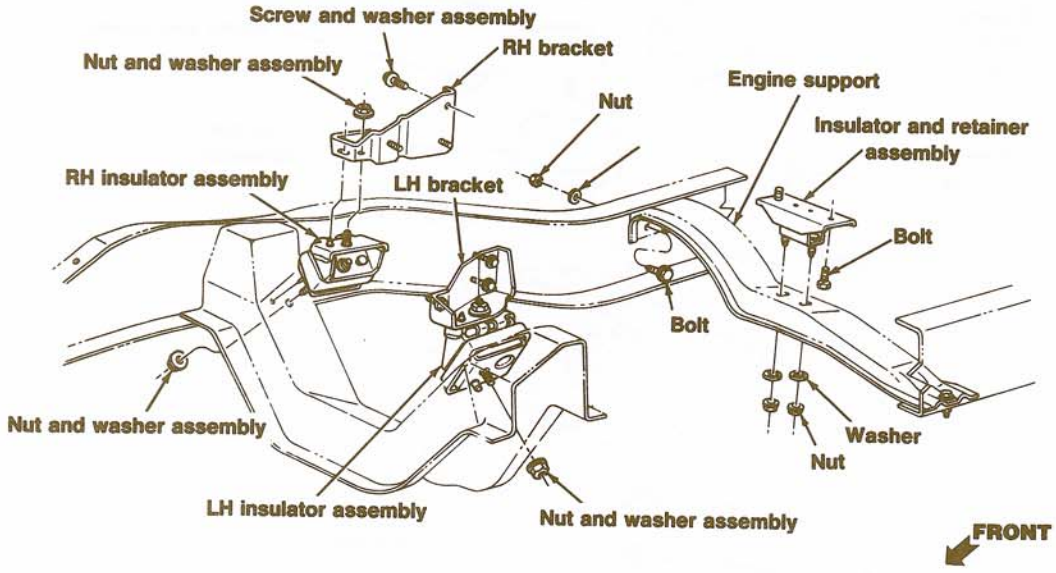

FRONT AND REAR ENGINE SUPPORTS (2.3L EFI ENGINE)

(12)

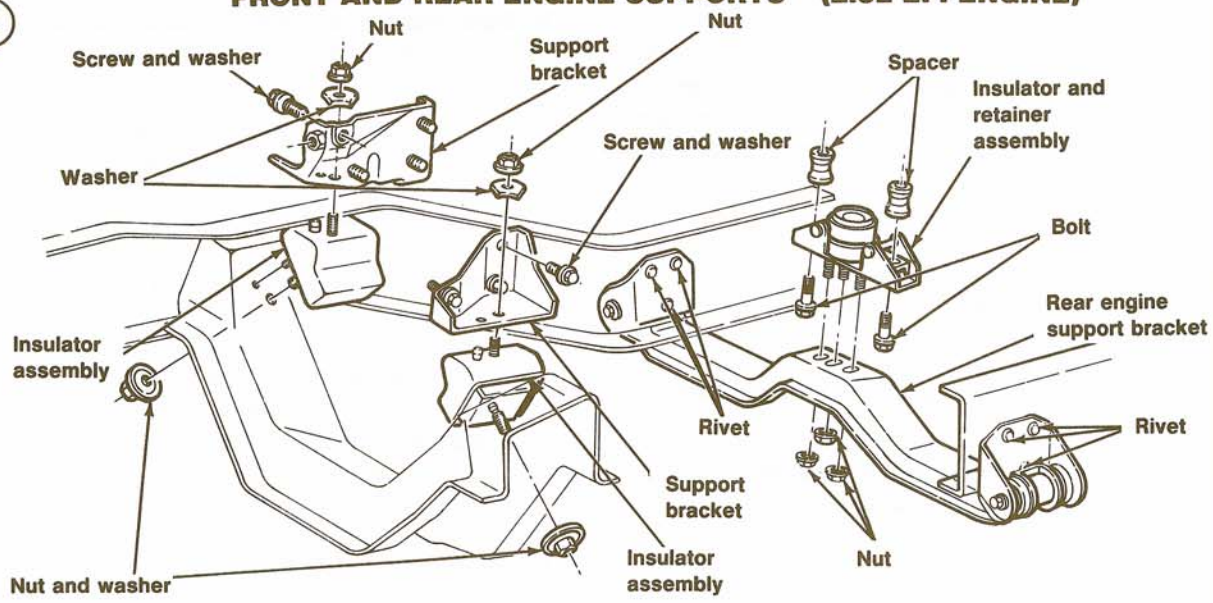

MANUAL TRANSMISSION

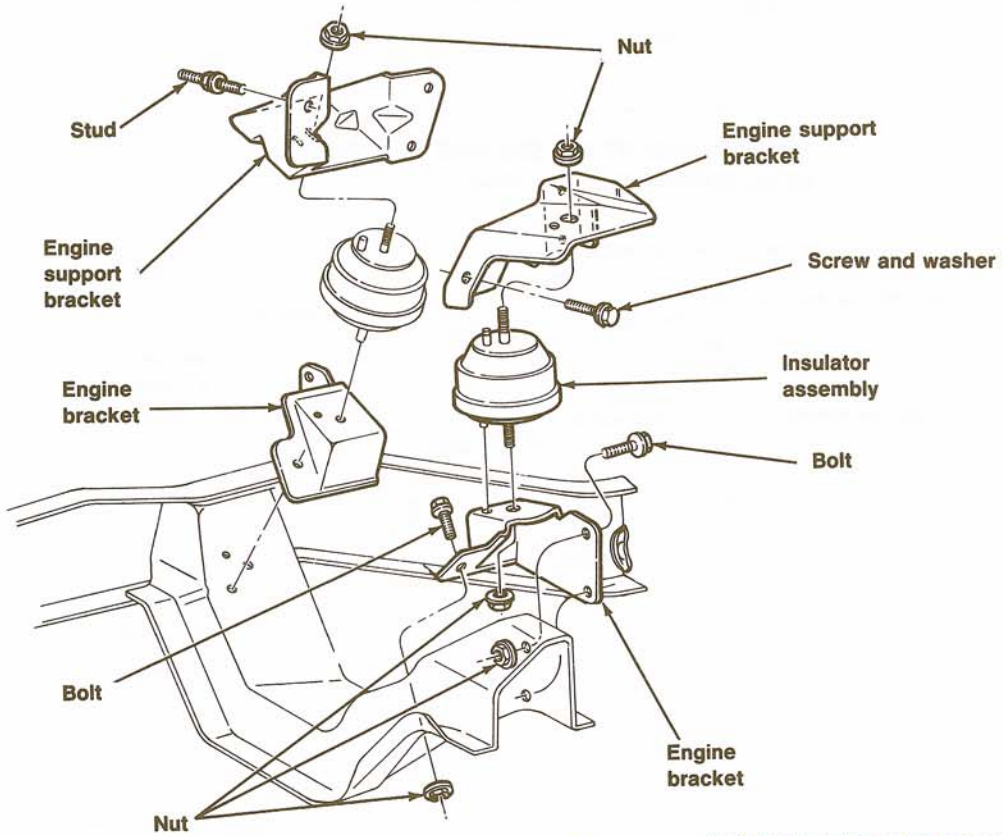

AUTOMATIC TRANSMISSION

FRONT OF VEHICLE

DIESEL ENGINE REMOVAL

WARNING

The engine is heavy, awkward to handle and has sharp edges. It may shift or drop suddenly during removal. To prevent serious injury, always observe the following precautions.

1. Never place any part of your body where a moving or falling engine may trap, cut or crush you.

2. If you must push the engine during removal, use a board or similar tool to keep your hands out of danger.

3. Be sure the hoist is designed to lift engines and has enough load capacity for your engine.

4. Be sure the hoist is securely attatched to safe lifting points on the engine.

5. The engine should not be difficult to lift with a proper hoist. If it is, stop lifting, lower the engine back onto its mounts and make sure the engine has been completely separated from the vehicle.

1. Disconnect the negative battery cables at each battery and engine. Disconnect the positive battery cables at each battery.
2. Disconnect the underhood lamp, if so equipped. Mark the location of the hinges and remove the hood.
3. Drain the cooling system. See Chapter Seven.

4A. 2.2L engine—Unclamp and remove the air cleaner outlet from the intake manifold. Disconnect crankcase vent hose at the valve cover baffle chamber.

4B. 2.3L engine—Remove the crankcase breather hose from the valve cover. Disconnect and remove the intake hose between the turbocharger and air cleaner. Cap turbocharger inlet with Ford part No. T85T-9395-A or equivalent.

5. On air conditioned models, remove the compressor without disconnecting any refrigerant lines and place it to one side out of the way.
6. 2.2L engine—If equipped with power steering, remove the power steering pump from its mounting bracket without disconnecting any hydraulic lines and place it to one side out of the way.
7. Disconnect the coolant overflow line at the radiator filler neck and the upper and lower radiator hoses at the engine. Disconnect the heater hoses at the heater core fittings. Remove the cooling fan and radiator. See Chapter Seven.

8A. 2.2L engine—Disconnect the fuel supply and return lines at the fuel filter.

8B. 2.3L engine—Disconnect the electrical connector at the fuel conditioner. Disconnect the fuel supply line at the conditioner and the fuel return line at the injection pump. See **Figure 13**.

9. Disconnect the vacuum lines at the vacuum pump fittings. See **Figure 14**.
10. Disconnect the throttle cable (and cruise control cable, if so equipped) at the injection pump. On 2.2L engines, disconnect the cold-start cable at the injection pump.
11. Separate the engine wiring harness from the chassis harness at the bottom of the injection pump.
12. Disconnect the coolant temperature sensor at the front of the cylinder head (2.2L) or the rear of the cylinder head (2.3L).
13. 2.3L engine—Disconnect the glow plug buss bar connector.
14. Remove the starter motor (Chapter Eight).
15. Securely block both rear wheels so the truck will not roll in either direction. Loosen the right

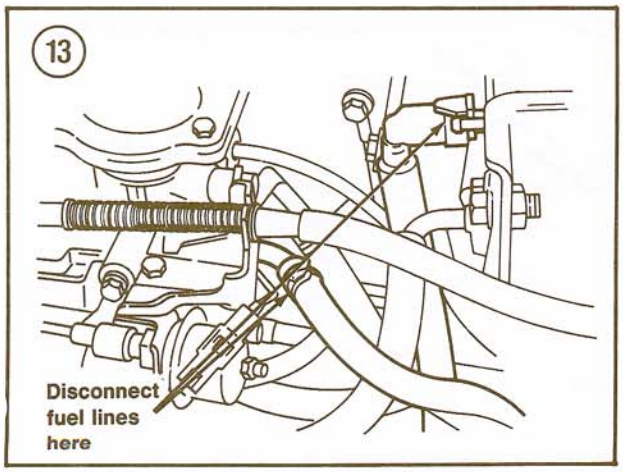

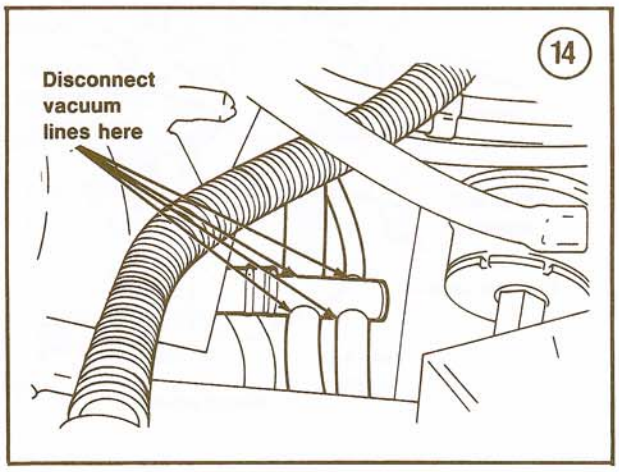

front wheel lug nuts. Partially raise the vehicle with a jack, support it with a jackstand and remove the wheel/tire assembly. Remove the inner fender.

16. Disconnect the oil pressure switch lead. Disconnect the oil cooler lines at the oil filter adapter.

17. Raise the vehicle with the jack and place it on jackstands.

18. Refer to **Figure 15** and remove the engine mount nuts.

19. Disconnect the exhaust inlet pipe from the manifold (2.2L) or turbocharger outlet pipe (2.3L).

20. 2.3L engine—Disconnect the power steering pump hoses at the pump. Plug the hoses and cap the pump fittings to prevent leakage.

21. Disconnect the red hydraulic line at the clutch housing. Plug the line to prevent leakage and place it out of the way.

22. Remove all transmission attaching bolts except the top two.

23. Remove the jackstands and lower the vehicle to the ground.

24. Support the front of the transmission and the flywheel housing with a jack to prevent damage to the transmission and to ease removal of the engine.

25. Attach an engine hoist chain or sling to the lifting brackets on the engine. Connect the bracket or sling to an engine hoist.

26. Remove the top two transmission attaching bolts.

NOTE

At this point, there should be no hoses, wires or linkages connecting the engine to the transmission or body. Recheck to be sure nothing will hamper engine removal and that all accessories, hoses, tubes and wires are positioned out of the way.

27. Raise the engine slightly, then carefully disengage it from the transmission. Remove the engine from the engine compartment with the hoist, tilting it if necessary to prevent damage to the rear cover plate or any other component. Once the engine is clear of the vehicle, lower it to a suitable support or an engine stand. Fasten the engine in the support or stand, then disconnect the hoist and lifting sling or chain. Inspect the rubber motor mounts and insulators for wear or damage. If these conditions exist, replace the mounts or insulators before reinstalling the engine.

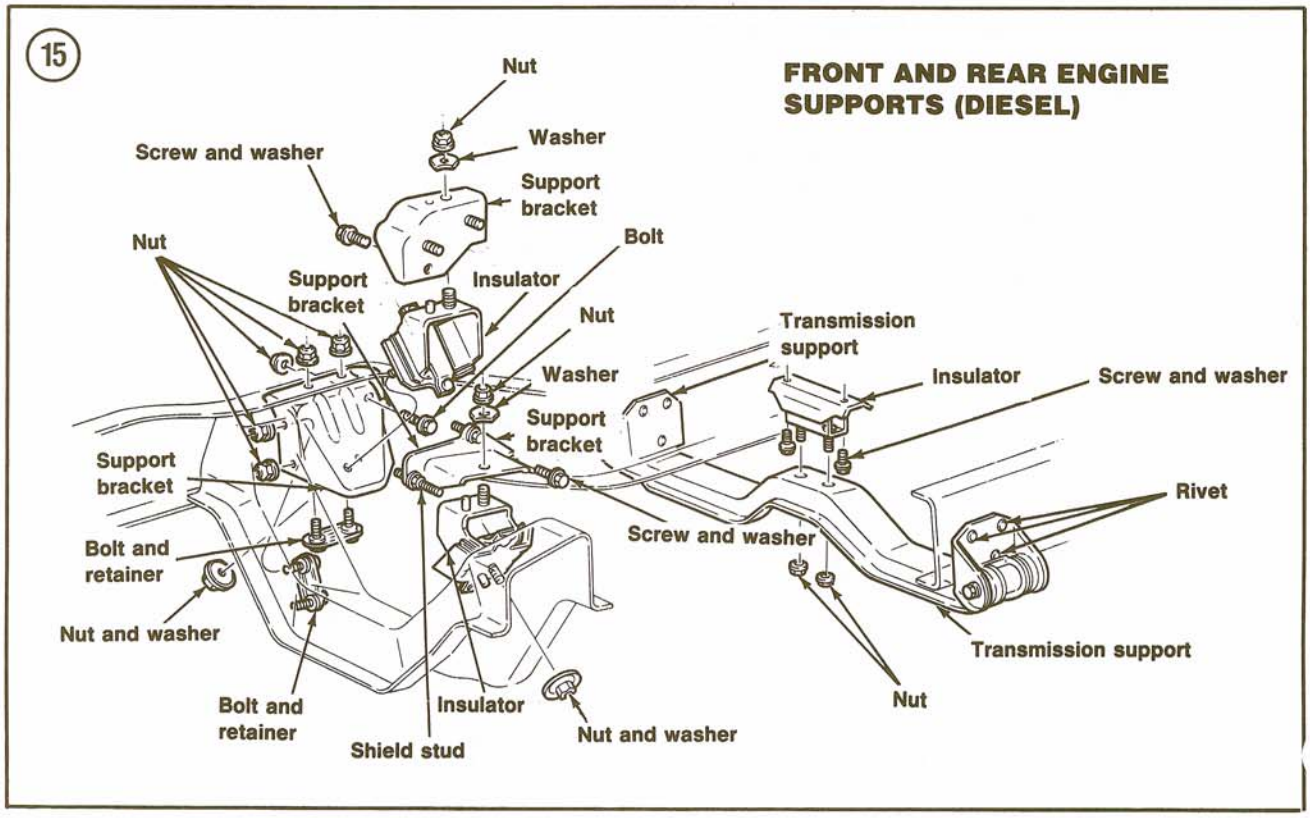

DIESEL ENGINE INSTALLATION

Engine installation is the reverse of removal, plus the following:

1. Lower the engine into the engine compartment carefully and engage the transmission input gear splines with the clutch disc splines.
2. Leave the hoist attached and holding the engine weight until the upper transmission bolts are installed.
3. Tighten all fasteners to specifications (**Table 5** or **Table 6**).
4. Fill the engine with an oil recommended in Chapter Three.
5. Fill and bleed the cooling system. See Chapter Seven.
6. Fill and bleed the power steering pump on 2.3L models.
7. Adjust the drive belts. See Chapter Three.

DISASSEMBLY CHECKLISTS

To use the checklists, remove and inspect each part in the order mentioned. To reassemble, go through the checklists backwards, installing the parts in order. Each major part is covered under its own heading in this chapter, unless otherwise noted.

Decarbonizing or Valve Service

1. Remove the valve cover.
2. Remove the intake and exhaust manifolds.
3. Remove the rocker arms.
4. Remove the cylinder head.
5. Have valves removed and inspected. Inspect valve guides and seats, repairing or replacing as necessary.
6. Assemble by reversing Steps 1-5.

Valve and Ring Service

1. Perform Steps 1-5 of *Decarbonizing or Valve Service.*
2. Remove the oil pan.
3. Remove the oil pump.
4. Remove the pistons with the connecting rods.
5. Remove the piston rings. It is not necessary to separate the pistons from the connecting rods unless a piston, connecting rod or piston pin needs repair or replacement.
6. Assemble by reversing Steps 1-5.

General Overhaul

1. Remove the engine. If available, mount the engine on an engine stand. These can be rented from equipment rental dealers. The stand is not absolutely necessary, but it will make the job much easier.
2. Remove the clutch (Chapter Nine) from manual transmission vehicles.
3. Remove the flywheel or drive plate.
4. Remove the motor mount brackets, oil filter and oil pressure sending unit.
5. Remove the coolant temperature sending unit from the engine.
6. Check the engine for signs of coolant or oil leaks, then clean the outside of the engine with solvent.
7. Remove the distributor. See Chapter Eight.
8. Remove all hoses and tubes connected to the engine.
9. Remove the fuel pump, if so equipped. See Chapter Six.
10. Remove the intake and exhaust manifolds.
11. Remove the thermostat housing and water pump. See Chapter Seven.
12. Remove the valve cover and rocker arms.
13. Remove the crankshaft pulley and timing belt outer cover.
14. Remove the cylinder head.
15. Remove the camshaft.
16. Remove the auxiliary shaft.
17. Remove the oil pan and oil pump.
18. Remove the pistons and connecting rods.
19. Remove the crankshaft and main bearings.
20. Inspect the cylinder block.
21. Assemble by reversing Steps 1-19.

FRONT ENGINE MOUNTS

Removal/Installation

Refer to **Figure 11** (2.0L), **Figure 12** (2.3L) or **Figure 15** (diesel) for this procedure.

1. Remove the nuts from the top of the insulator brackets.
2. Securely block both rear wheels so the truck will not roll in either direction. Raise the vehicle with a jack and place it on jackstands.
3. Position a floor jack with wooden block under the oil pan. Raise the engine enough to unload the insulator, then continue raising it until the support bracket clears the insulator.
4. Remove the screws holding the bracket to the engine. Remove the bracket.

5. Remove the nut(s) holding the insulator to the crossmember or crossmember support bracket. Remove the insulator.
6. Installation is the reverse of removal. Tighten bracket-to-engine screws to 45-60 ft.-lb. (62-81 N•m). Tighten insulator-to-crossmember nut(s) to 71-94 ft.-lb. (91-127 N•m). Tighten insulator-to-engine bracket nut to 65-85 ft.-lb. (88-115 N•m).

REAR ENGINE SUPPORT

Refer to **Figure 11** (2.0L), **Figure 12** (2.3L) or **Figure 15** (diesel) for this procedure.
1. Raise the vehicle with a jack and place it on jackstands.
2. Remove the 2 nuts holding the rear insulator to the engine support.
3. Position a floor jack with wooden block under the oil pan. Raise the engine enough to unload the insulator, then continue raising it until the support bracket clears the insulator.
4. Remove the bolts holding the insulator to the rear of the engine. Remove the insulator.
5. Installation is the reverse of removal. Tighten bolts to 60-80 ft.-lb. (82-108 N•m). Tighten nuts to 71-94 ft.-lb. (91-127 N•m).

VALVE COVER

Refer to **Figure 16** (typical) for this procedure.
1A. Carburetted engine—Remove the air cleaner and intake duct assembly. See Chapter Six.
1B. Fuel injected engine—Disconnect the throttle cable and remove the throttle body assembly. See Chapter Six.
2. Disconnect the spark plug wires from the spark plugs and wire looms. Lay the wires back out of the way.
3. Remove the oil filler cap/crankcase breather tube assembly.
4. Disconnect or move out of the way any other hoses/wires which prevent removal of the valve cover.
5. Remove the valve cover attaching screws with a 10 mm socket. On 2.3L engines, note the positioning of the retainers installed under 4 of the screws. Do not lose the retainers.

NOTE

If the cover refuses to come free in Step 6, bump the end with a rubber mallet. If this does not break the gasket seal, carefully pry the cover loose with a screwdriver. Use caution to prevent distorting the cover sealing flange.

6. Remove the valve cover and gasket. Discard the gasket.
7. Installation is the reverse of removal. Use a new gasket and coat it on the valve cover side with an oil-resistant gasket sealer such as Ford Gasket and

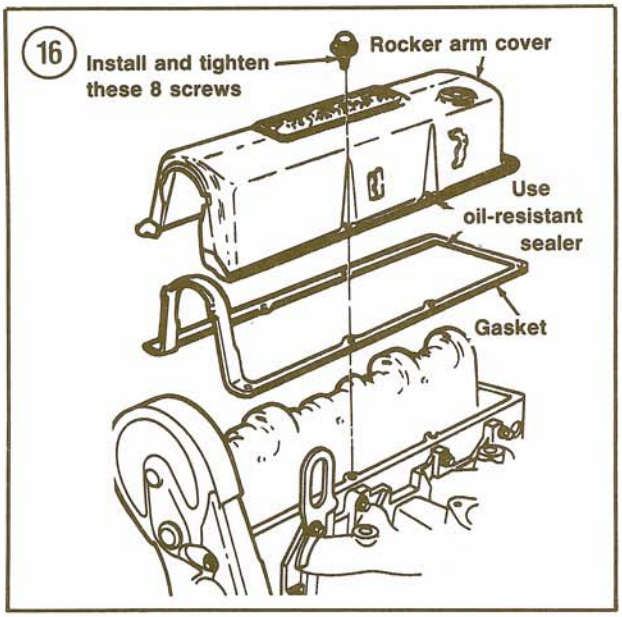

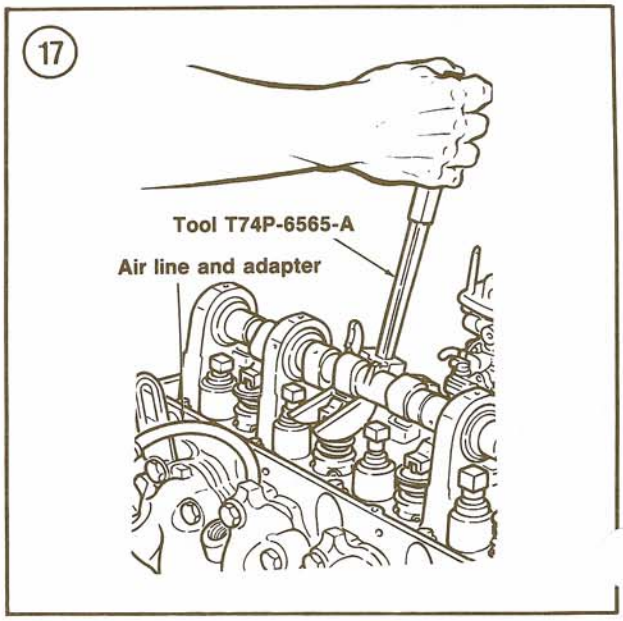

Seal Adhesive (part No. D7AZ-19B508-A. Let dry and install gasket in rocker arm cover with locating tabs properly positioned in cover slots. On 2.3L engines, install retainers under the screws in the same position as removed. Tighten all 2.0L cover screws to 6-8 ft.-lb. (7-9 N•m) and all 2.3L cover screws to 62-97 in.-lb. (7-11 N•m). Run the engine at fast idle and check for oil leaks.

ROCKER ARMS AND HYDRAULIC LASH ADJUSTER

Removal/Installation

1. Remove the valve cover as described in this chapter.
2. Rotate the camshaft by hand until the low side of the camshaft lobe contacts the rocker arm being removed.
3. Using Ford tool part No. T74P-6565-A, collapse the valve spring and slide the cam follower over the lash adjuster and out of the head. See **Figure 17**. If necessary, lift the lash adjuster out of the head.
4. Repeat Step 2 and Step 3 for each rocker arm to be removed.
5. Installation is the reverse of removal. Each valve spring must be collapsed and released after the camshaft follower is reinstalled before rotating the camshaft to another position.

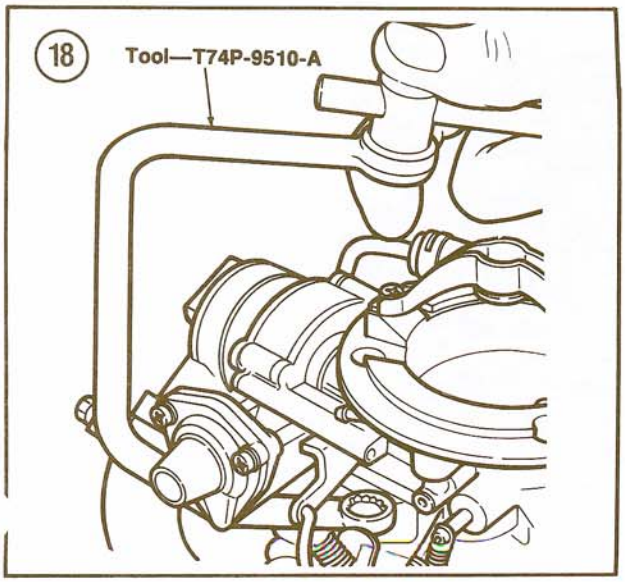

INTAKE MANIFOLD

Removal/Installation (Carburetted Engine)

The intake manifold can be removed with the carburetor intact. If the carburetor is to be removed before removing the manifold, Ford tool part No. T74P-9510-A is required to reach the attaching bolts. See **Figure 18**.

1. Disconnect the negative battery cable.
2. Drain the cooling system. See Chapter Seven.
3. Remove the air cleaner assembly. See Chapter Six.
4. Disconnect the throttle cable at the carburetor. If equipped with an automatic transmission, disconnect the transmission kickdown rod.
5. Label and disconnect all electrical leads and vacuum lines at the carburetor.
6. Disconnect the hot water hose at the manifold cover nipple fitting.
7. Remove the dipstick. Disconnect the heat tube at the EGR valve.
8. Disconnect the fuel line at the carburetor fuel filter. Cap the line to prevent leakage.
9. Remove the bolt holding the dipstick tube to the intake manifold.
10. Disconnect and remove the PCV hose between the intake manifold and engine block.
11. Remove the distributor cap. Remove the spark plug wire loom from the valve cover and place the distributor cap (with wires attached) out of the way.
12. Remove the intake manifold attaching bolts and stud. See **Figure 19**. Remove the intake manifold.

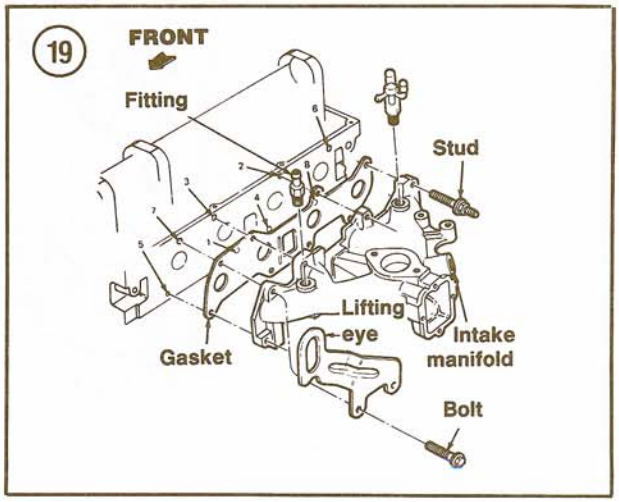

13. Remove and discard the intake manifold gasket. Clean all gasket residue from the manifold and cylinder head sealing surfaces.
14. If a new manifold is to be installed, transfer all fittings from the old one and torque to 62-97 in.-lb. (7-11 N•m).
15. Installation is the reverse of removal. Use a new gasket and tighten all fasteners in the sequence shown in **Figure 19** to 5-7 ft.-lb. (7-9 N•m). Retighten to 14-21 ft.-lb. (19-28 N•m) in the same sequence. Be sure to install the stud in the No. 6 position, as shown in **Figure 19**.

Removal/Installation
(Fuel Injected Engine)

WARNING

Before opening any fuel system connections on a fuel injected engine, relieve system pressure as described in Chapter Six.

1. Disconnect the negative battery cable.
2. Drain the cooling system. See Chapter Seven.
3. Remove the fuel cap. Relieve system pressure. See Chapter Six.
4. Refer to **Figure 20** and disconnect the following electrical leads:
   a. Throttle position sensor (TPS).
   b. Injector wiring harness.
   c. Anti-knock sensor.
   d. Air charge temperature sensor.
   e. Engine coolant temperature sensor.
5. Refer to **Figure 21** and label/disconnect the vacuum lines at the following locations:
   a. Upper intake manifold vacuum tree.
   b. EGR valve.
   c. Fuel pressure regulator.
6. Remove the throttle linkage shield. Disconnect the throttle linkage, cruise control and automatic transmission kickdown cable (if so equipped).
7. Disconnect the following:
   a. Air intake hose.
   b. Air bypass hose.
   c. Crankcase vent hose.
8. Disconnect the PCV hose from the fitting underneath the upper intake manifold.
9. Unclamp and disconnect the water bypass line at the lower intake manifold.
10. Loosen the EGR tube flange nut, then unscrew it and disconnect the tube from the EGR valve. See **Figure 22**.
11. Disconnect the push-connect fittings at the fuel supply and return lines. See Chapter Six. Disconnect the return line from the fuel supply manifold.
12. Remove the dipstick bracket bolt.
13. Remove the upper intake manifold fasteners. Remove the upper intake manifold with throttle body attached. See **Figure 23**. Remove and discard the gasket.

20

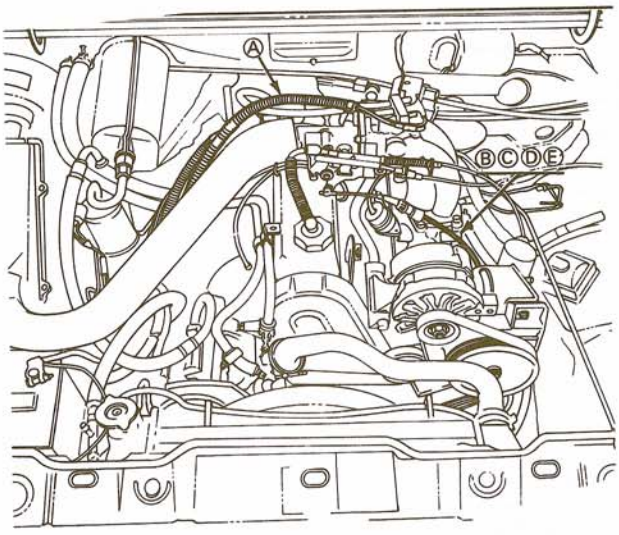

21

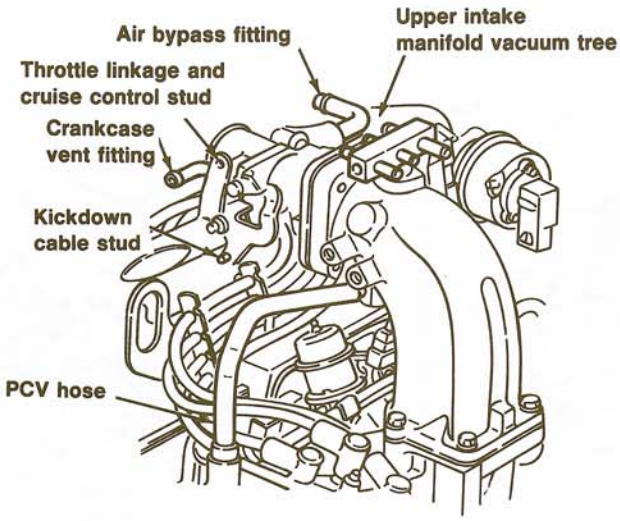
Air bypass fitting
Upper intake manifold vacuum tree
Throttle linkage and cruise control stud
Crankcase vent fitting
Kickdown cable stud
PCV hose

22

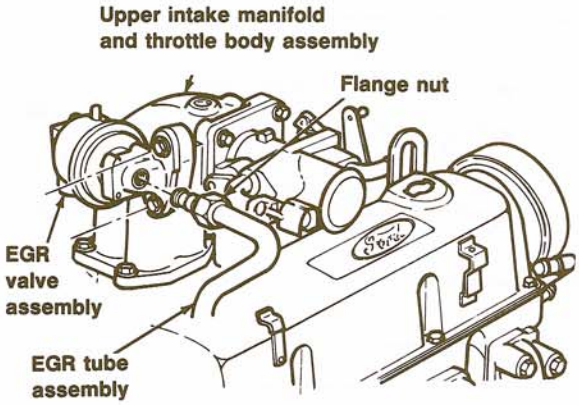
Upper intake manifold and throttle body assembly
Flange nut
EGR valve assembly
EGR tube assembly

23

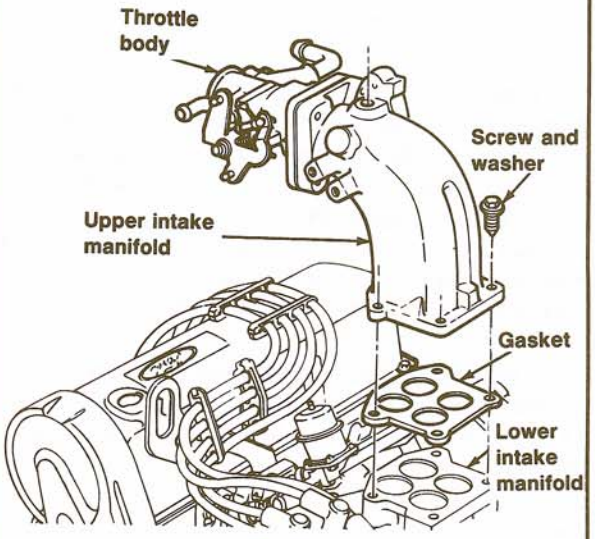
Throttle body
Screw and washer
Upper intake manifold
Gasket
Lower intake manifold

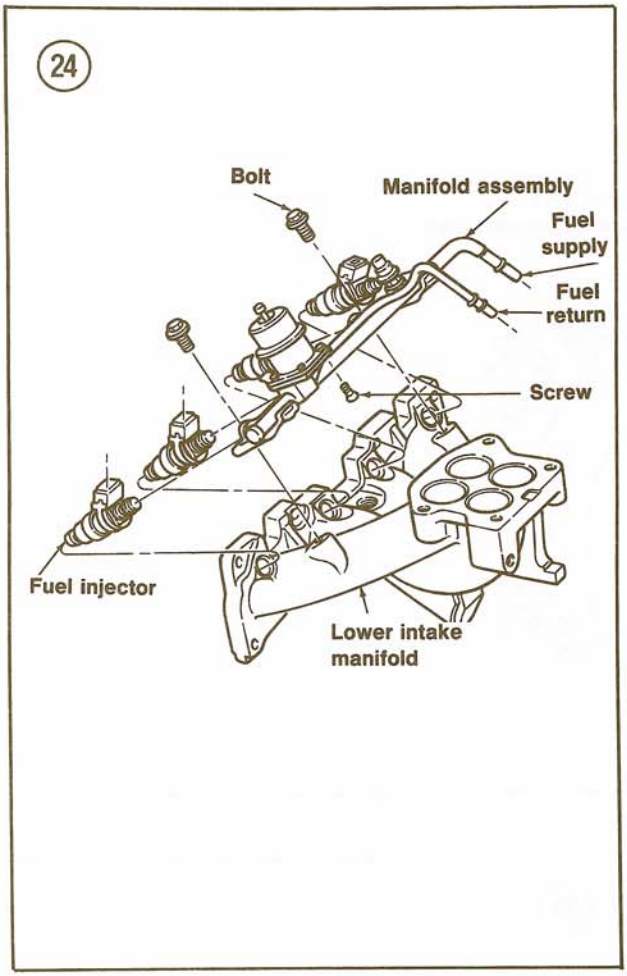

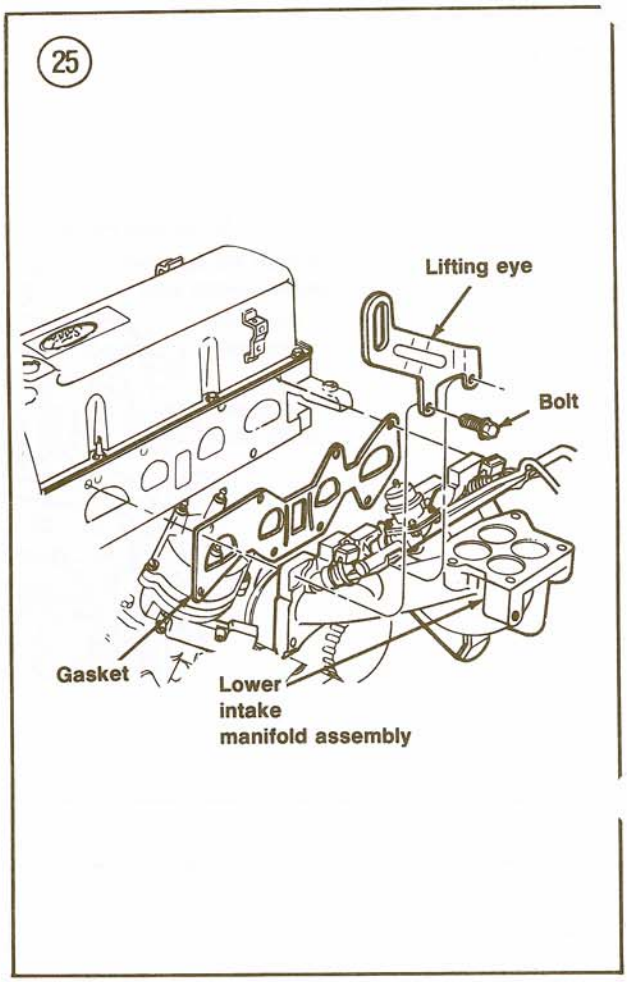

14. Disconnect the wiring harness at each injector, then move the harness to one side out of the way.
15. Remove the 2 fuel supply manifold bolts. Carefully remove the fuel supply manifold and injectors. See **Figure 24**.
16. Remove the 4 bolts holding the lower intake manifold and lifting eye. Remove the lower intake manifold and gasket (**Figure 25**). Discard the gasket.
17. Clean all gasket residue from the manifold and cylinder head sealing surfaces.
18. If a new upper or lower manifold is to be installed, transfer any fittings from the old one and torque to 62-97 in.-lb. (7-11 N•m).
19. Installation is the reverse of removal. Use a new gasket between the lower manifold and cylinder head and tighten all fasteners in the sequence shown in **Figure 26** to 12-15 ft.-lb. (16-20 N•m). Tighten both fuel manifold bolts to the same value. Use a new gasket between the upper and

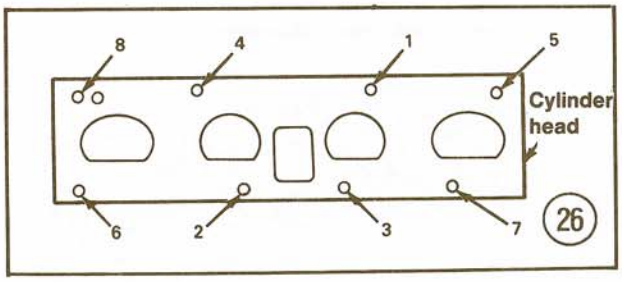

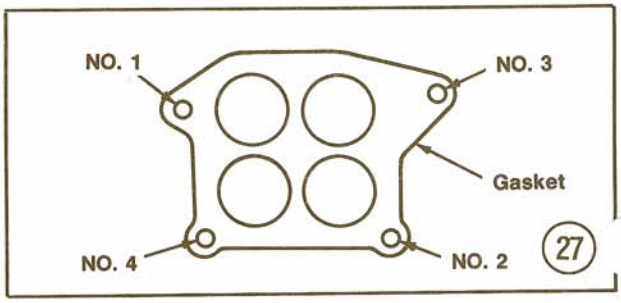

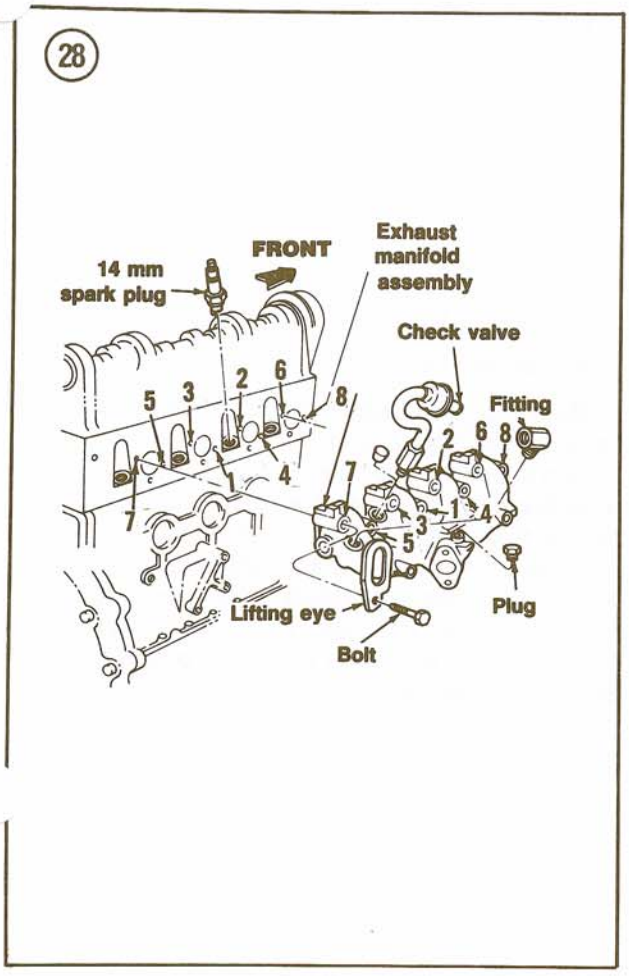

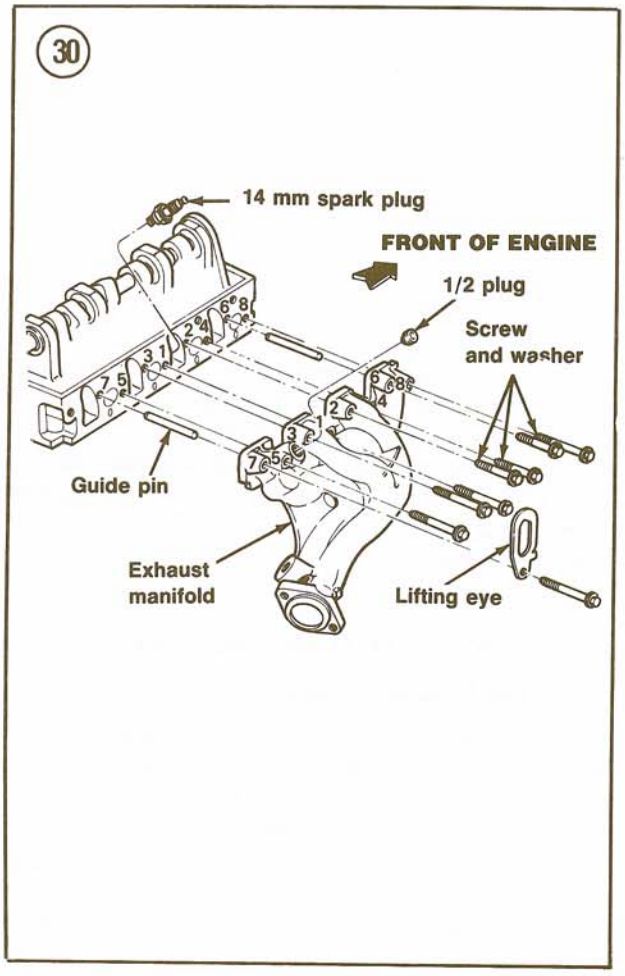

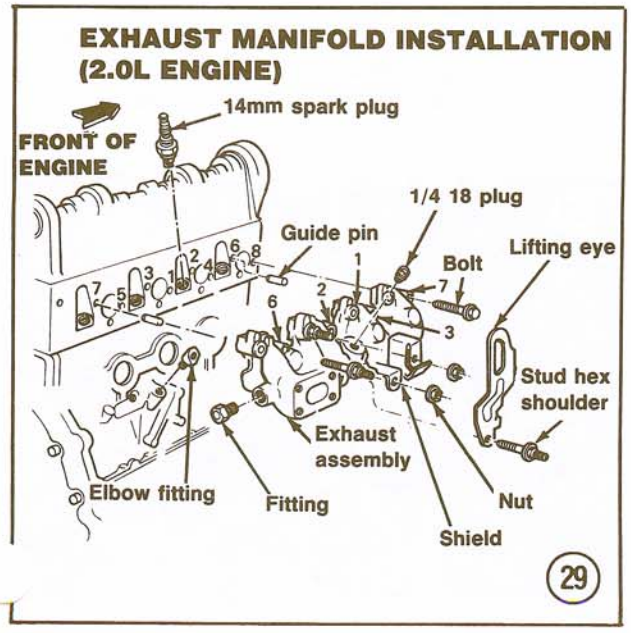

lower manifolds and tighten to 15-22 ft.-lb. (20-30 N•m) following the sequence shown in **Figure 27**. Tighten all other fasteners to specifications (**Table 4**).

EXHAUST MANIFOLD

Removal/Installation

Refer to **Figure 28** (1983-1984 2.0L), **Figure 29** (1985-on 2.0L) or **Figure 30** (2.3L) for this procedure.

1. Remove the air cleaner and duct assembly. See Chapter Six.
2. Disconnect the EGR line at the exhaust manifold and loosen the EGR tube.
3. Remove the check valve at the exhaust manifold. Remove the hose at the rear of the air bypass valve.
4. Remove the screw holding the heater hoses to the valve cover.

5. If equipped with a heat stove, remove the 2 nuts holding the lower half (A, **Figure 31**) and the 3 fasteners holding the upper half (B, **Figure 31**). Remove the heat stove.
6. Remove the 8 attaching bolts. Remove the 2 exhaust pipe bolts, if used. Remove the manifold and gasket, if used. Discard the gasket.
7. If a new manifold is to be installed, transfer all fittings from the old one. On 2.0L manifolds, tighten the check valve to 17-20 ft.-lb. (23-27 N•m), the plug to 12-16 ft.-lb. (16-22 N•m) and all others to 6-10 ft.-lb. (8-13.5 N•m). On 2.3L manifolds, tighten all fittings to 23-33 ft.-lb. (31-35 N•m).
8. Installation is the reverse of removal. Install the attaching fasteners and tighten all fasteners to 5-7 ft.-lb. (7-9 N•m) in the sequence shown in **Figures 28-30**. Retighten to 16-23 ft.-lb. (22-31 N•m) in the same sequence.

MANIFOLD INSPECTION

Intake and Exhaust Manifolds

1. Check the intake and exhaust manifolds for cracks or distortion. Replace as necessary.
2. Check the sealing surfaces for nicks or burrs. Small burrs may be removed with an oilstone.
3. Place a straightedge across the manifold sealing surfaces and measure any gap between the straightedge and sealing surface with a flat feeler gauge. Measure from end to end and diagonally. If the sealing surface is not flat within 0.006 in. (0.15 mm) per foot of manifold length, replace the manifold.

CAMSHAFT BELT OUTER COVER

Removal/Installation

Refer to **Figure 32** for this procedure.
1. Disconnect the negative battery cable.
2. Loosen the air pump and alternator adjusting bolts. Move the air pump and alternator to one side and remove the drive belts.
3. Remove the fan blade and 4 water pump pulley bolts.
4. Drain the cooling system. See Chapter Seven.
5. Remove the crankshaft pulley bolt and pulley.
6. Remove the thermostat housing and gasket.
7. If equipped with power steering, loosen the power steering pump mounting bracket and move the pump to one side out of the way without disconnecting any hydraulic lines.
8. Remove the camshaft belt outer cover bolts. Remove the outer cover.
9. Installation is the reverse of removal. Tighten the cover bolts to specifications (**Table 4**). Refill the cooling system (Chapter Seven) and adjust the drive belts (Chapter Three).

CAMSHAFT BELT

Removal/Installation

1. Remove the camshaft belt outer cover as described in this chapter.
2. Draw an arrow on the camshaft belt with chalk to indicate normal direction of rotation (clockwise as seen from the front). If the belt is to be reused, it must be installed to move in the same direction.
3. Reinstall the crankshaft pulley bolt. Place a wrench on the bolt and rotate the engine in a clockwise direction until the No. 1 piston is at top dead center on the compression stroke.

CAUTION

Rotate the engine only in its normal direction (clockwise as seen from the front of the vehicle). Rotating the engine backward may cause the camshaft belt to slip on the sprockets, changing the valve timing.

When the crankshaft is positioned correctly, the O° (TDC) mark on the vibration damper will align with the timing pointer on the front of the engine and the camshaft timing mark will align with the

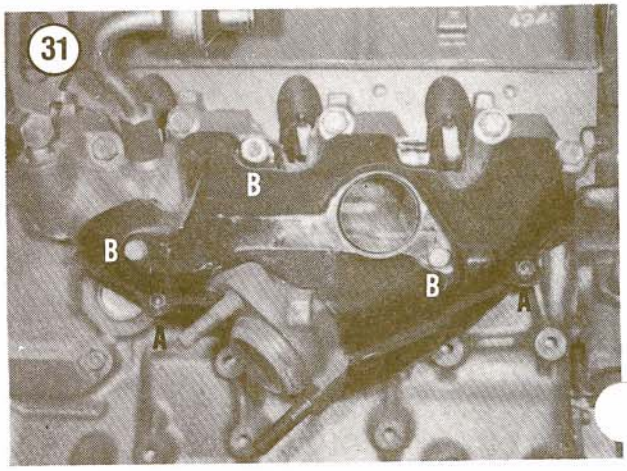

(32)

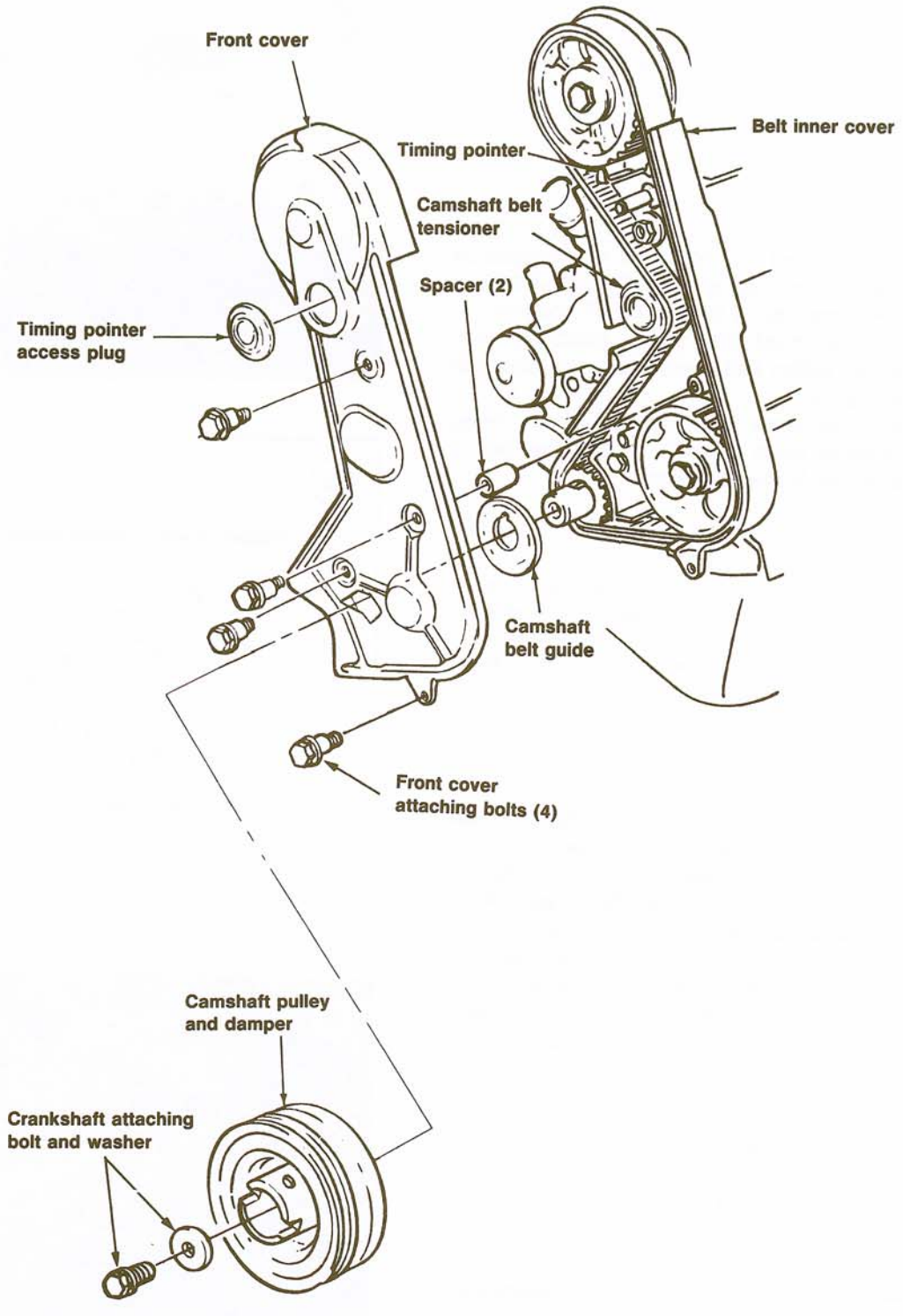
Front cover
Belt inner cover
Timing pointer
Camshaft belt tensioner
Spacer (2)
Timing pointer access plug
Camshaft belt guide
Front cover attaching bolts (4)
Camshaft pulley and damper
Crankshaft attaching bolt and washer

camshaft sprocket timing mark (**Figure 33**). Remove the distributor cap and make sure the rotor is pointing to the No. 1 terminal in the cap (**Figure 34**). If the rotor is pointing to No. 4 terminal in the cap, No. 1 piston is on its exhaust stroke (not on its compression stroke, where it should be) and No. 4 piston is on its compression stroke.

4. Loosen the camshaft belt tensioner adjustment bolt (**Figure 35**) and install tensioner adjusting tool part No. T74P-6254-A on the tension spring rollpin. Use the tool to release the belt tension as far as possible, then tighten the adjustment bolt to hold the tensioner in its fully released position.
5. Remove the crankshaft pulley attaching bolt, the crankshaft pulley and damper and the camshaft timing belt guide.
6. Remove and check the camshaft belt for wear, missing teeth or other damage. Replace the belt if any of these conditions are found.

CAUTION

Do not bend or twist the belt. Do not use sharp instruments to pry it off. Handle the belt with clean hands and keep grease, oil and antifreeze from touching it as they will cause the belt to deteriorate, resulting in a premature failure. Do not rotate any of the belt sprockets while the belt is removed as that would change engine timing.

7. Make sure the timing marks on the camshaft sprocket and timing pointer are properly aligned and that the distributor rotor points toward the No. 1 terminal in the distributor cap. See **Figure 36**.
8. Install the camshaft belt around the 3 drive sprockets and camshaft belt tensioner as shown in **Figure 32**. Align the belt properly on the sprockets.
9. Loosen the belt tensioner adjusting bolt (**Figure 35**) and let the tensioner move against the belt.

CAUTION

The spark plugs must be removed in Step 10 prior to rotating the engine or the camshaft belt may jump the sprocketed teeth during engine rotation.

10. Remove the spark plugs. Rotate the crankshaft clockwise (as seen from the front) 2 complete revolutions to remove any slack from the camshaft belt.

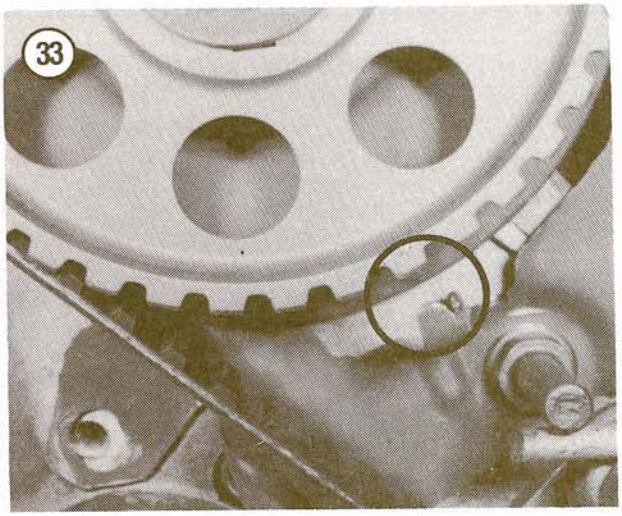

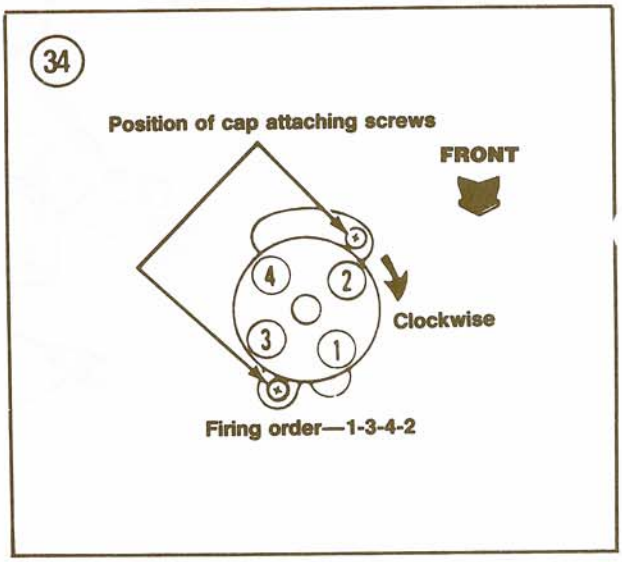

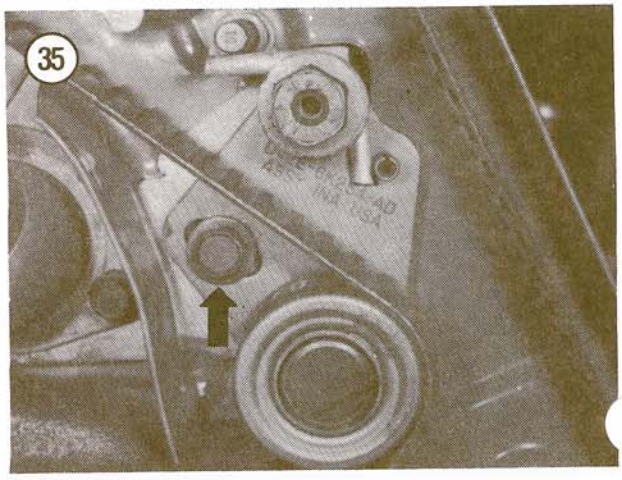

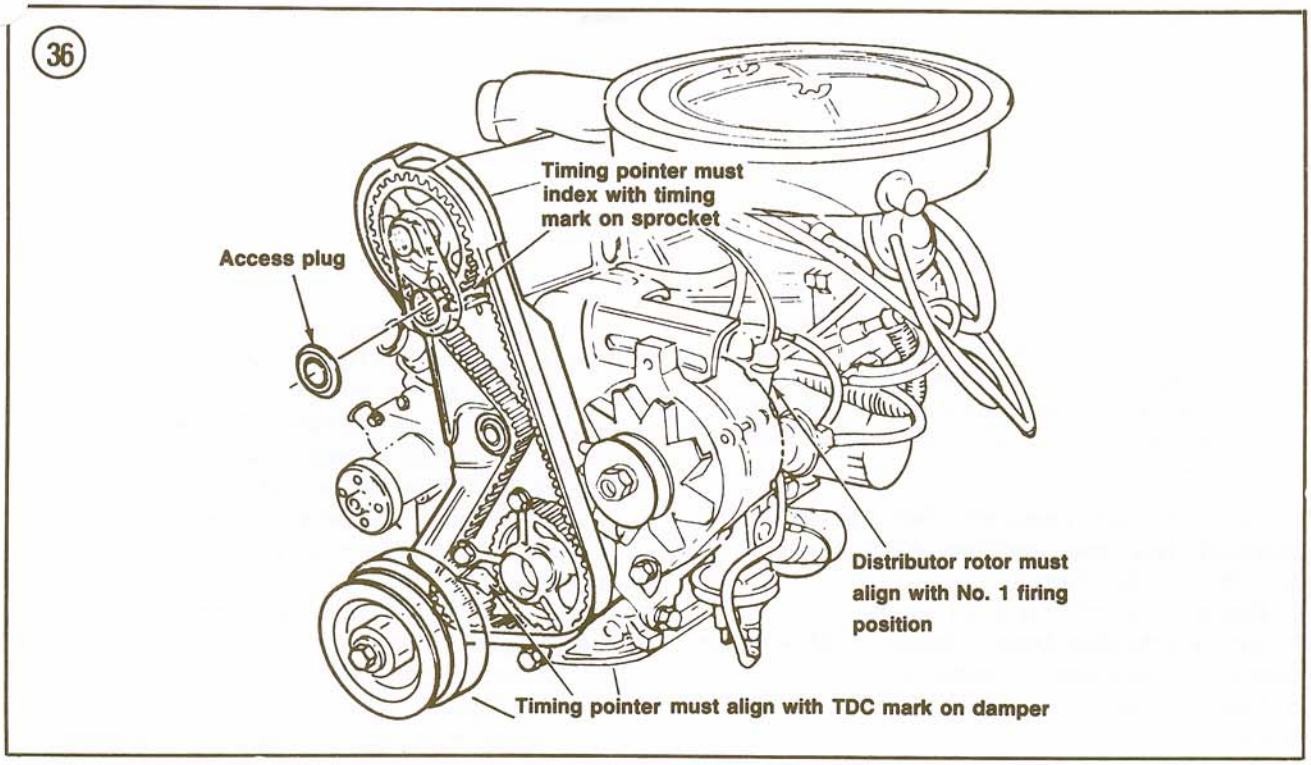

11. Tighten the tensioner adjusting and pivot bolts to specifications (**Table 4**).
12. Recheck alignment of timing marks as described in Step 7.
13. Install the camshaft belt guide, crankshaft pulley and damper and the crankshaft pulley bolt. Tighten the pulley bolt to specifications (**Table 4**).
14. Install the camshaft belt outer cover as described in this chapter.

SPROCKET AND FRONT SEAL REPLACEMENT

This section provides replacement procedures for the following sprockets and seals:

a. Camshaft sprocket.
b. Auxiliary shaft sprocket.
c. Crankshaft sprocket.
d. Camshaft seal.
e. Auxiliary shaft seal.
f. Camshaft belt cover seal.

A multi-purpose puller (Ford part No. T74P-6256-A) is required to remove and install the camshaft or auxiliary sprockets. Ford tool part No. T74P-6306-A is required to remove and install the crankshaft drive sprocket. A seal remover (part No. T74P-6700-B) is required to remove each of the 3 seals. Seal installer part No. T74P-6150-A is used to install each of the seals.

1. Remove the camshaft belt cover and camshaft belt as described in this chapter.
2. If the camshaft, auxiliary shaft or crankshaft drive sprockets are to be removed, refer to the tool list above and use the proper tool.
3. To replace the camshaft seal or auxiliary shaft seal, use the proper seal removal tool. When removing the camshaft seal, make sure the jaws of the tool grip the thin edges of the seal very tightly before operating the jaw-screw part of the tool.
4. To replace the camshaft belt cover seal, use the proper seal removal tool described in the list above. Use tool part No. T74P-6150-A to install the new seal.

CAUTION

Always use a new camshaft sprocket bolt or wrap the old bolt threads with Teflon tape. If Teflon tape is not available, coat the bolt threads with Teflon paste.

5. Installation of the sprocket is the reverse of removal. The threaded insert in the sprocket puller must be removed during camshaft or auxiliary shaft sprocket installation to permit the center

attaching bolt to be installed and tightened. Torque values are provided in **Table 4**. No special tool is necessary to install the crankshaft sprocket.

AUXILIARY SHAFT

Removal/Installation

NOTE

During the next step, front cover removal is not absolutely necessary. If the cover is not removed, trim the portion of the cover gasket which fits under the auxiliary shaft cover. Use this as a template to cut a matching portion from a new gasket and position it under the auxiliary shaft cover when it is reinstalled.

1. Remove the camshaft belt outer cover, camshaft belt and auxiliary shaft sprocket as described in this chapter.
2. Remove the cylinder front cover.
3. Remove the distributor (Chapter Eight) and fuel pump, if so equipped (Chapter Six).
4. Remove the auxiliary shaft cover from the block.
5. Remove the 2 screws holding the auxiliary shaft retaining plate to the engine block. Remove the retaining plate.
6. Carefully withdraw the auxiliary shaft from the engine block, making sure that the fuel pump eccentric (if so equipped) and distributor drive gear do not touch the auxiliary shaft bearing surfaces.
7. Check the auxiliary shaft bearings for wear or damage. If any bearing is visibly worn or defective, remove all with an internal puller (part No. T58L-101-A) and a slide hammer.

NOTE

If the engine is out of the vehicle and you do not have the necessary tools for bearing replacement, take the engine block to a Ford dealer or competent machine shop for bearing replacement.

8. Installation is the reverse of removal. If the auxiliary shaft bearings were removed, use a hollow drift of suitable size or Ford tool part No. T57T-7003-A to install the new bearings. Tighten all fasteners to specifications (**Table 4**).

CAUTION

Make sure the oil holes in the auxiliary shaft bearings are aligned with those in the engine block during installation.

OIL PAN

Removal

The oil pan is removed from the front of the engine on automatic transmission vehicles and from the rear on manual transmission vehicles.

1. Disconnect the negative battery cable.
2. Remove the air cleaner assembly. See Chapter Six.
3. Remove the crankcase oil dipstick.
4. Remove the engine mount to frame retaining nuts as described in this chapter.
5. Remove the fan shroud.
6. Automatic transmission—Disconnect the oil cooler lines at the radiator. Cap the lines and plug the fittings. Remove the radiator retaining bolts, pull the radiator upward and wire it to the hood.
7. Raise the vehicle with a jack and place it on jackstands.
8. Remove the dipstick and drain the engine oil. See Chapter Three.
9. Disconnect and remove the starter motor. See Chapter Eight.
10. Disconnect the exhaust manifold tube from the inlet pipe bracket at the air pump check valve.
11. 1986 2.3L engine—Disconnect the catalyt. converter at the inlet pipe.

12A. 1986 2.3L engine—Remove the insulator and retainer assembly as described in *Rear engine support* in this chapter.

12B. All others—Remove the nuts holding the transmission mount to the crossmember as described in this chapter.

13. Automatic transmission—Remove the bellcrank from the converter housing. Remove the oil cooler lines from the block retainer. Remove the front crossmember.
14. Manual transmission—Disconnect the right front lower shock absorber mount.
15. Place a jack under the engine. Raise the engine about 2 1/2 in. and insert a block of wood between each motor mount and the frame to hold it in this position, then remove the jack.
16. Automatic transmission—Place a jack undeer the transmission and raise it slightly.

NOTE

A low oil level sensor is installed in 1986 2.3L oil pans. However the sensor is connected only on models fitted with a 4-gauge or tachometer cluster.

17. Disconnect the low oil level sensor, if connected.
18. Remove the oil pan bolts and lower the pan to the chassis.
19. Remove the oil pump drive and pickup assembly as described in this chapter.

NOTE

The oil pan on 1986 2.3L engines is factory installed with 2 selective spacers at the rear of the pan to establish proper tolerance between the oil pan and transmission housing. These are not required for reinstallation of the pan and can be discarded if a new pan is being installed.

20. Remove the oil pan from the front on automatic transmission vehicles and from the rear on manual transmission vehicles.
21. Remove and discard the pan gasket (1986 2.3L) or the pan gasket halves and seals (all others).

Inspection

1. Remove all gasket or sealant residue from the pan and block sealing flanges.
2. Clean the pan thoroughly in solvent.
3. Check the pan for dents or warped sealing surfaces. Straighten or replace the pan as required.

Installation

Refer to **Figure 37** (1986 2.3L) or **Figure 38** (all others) for this procedure.
1. Clean all gasket or sealer residue from the cylinder block, front cover and rear main bearing cap. Be sure to clean the seal groove in the front cover and rear main bearing cap (**Figure 38**). Be careful not to gouge the sealing surfaces. On 1986 2.3L installations, also make sure the clutch or converter housing is clean.
2. 1986 2.3L engine:
   a. Run a 1/4 in. bead of Ford sealer part No. D6AZ-19662-A or part No. D6AZ-19662-B along the seams at the front cover and the rear main bearing cap.
   b. Install a new one-piece cork/rubber high-swell gasket in the groove machined in the oil pan flange.
3. All others:
   a. Coat the oil pan sealing flange and pan side of pan gaskets with gasket sealer. Allow sealer to

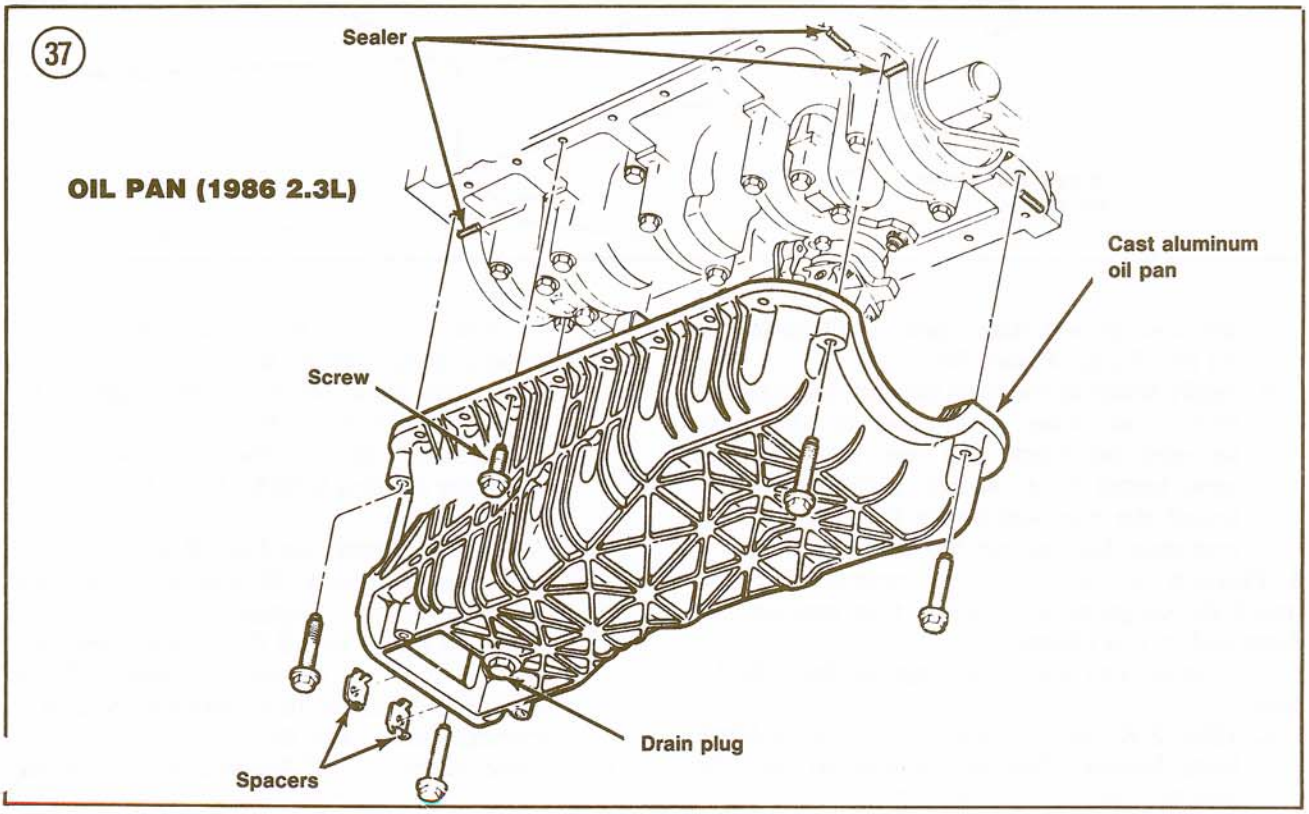

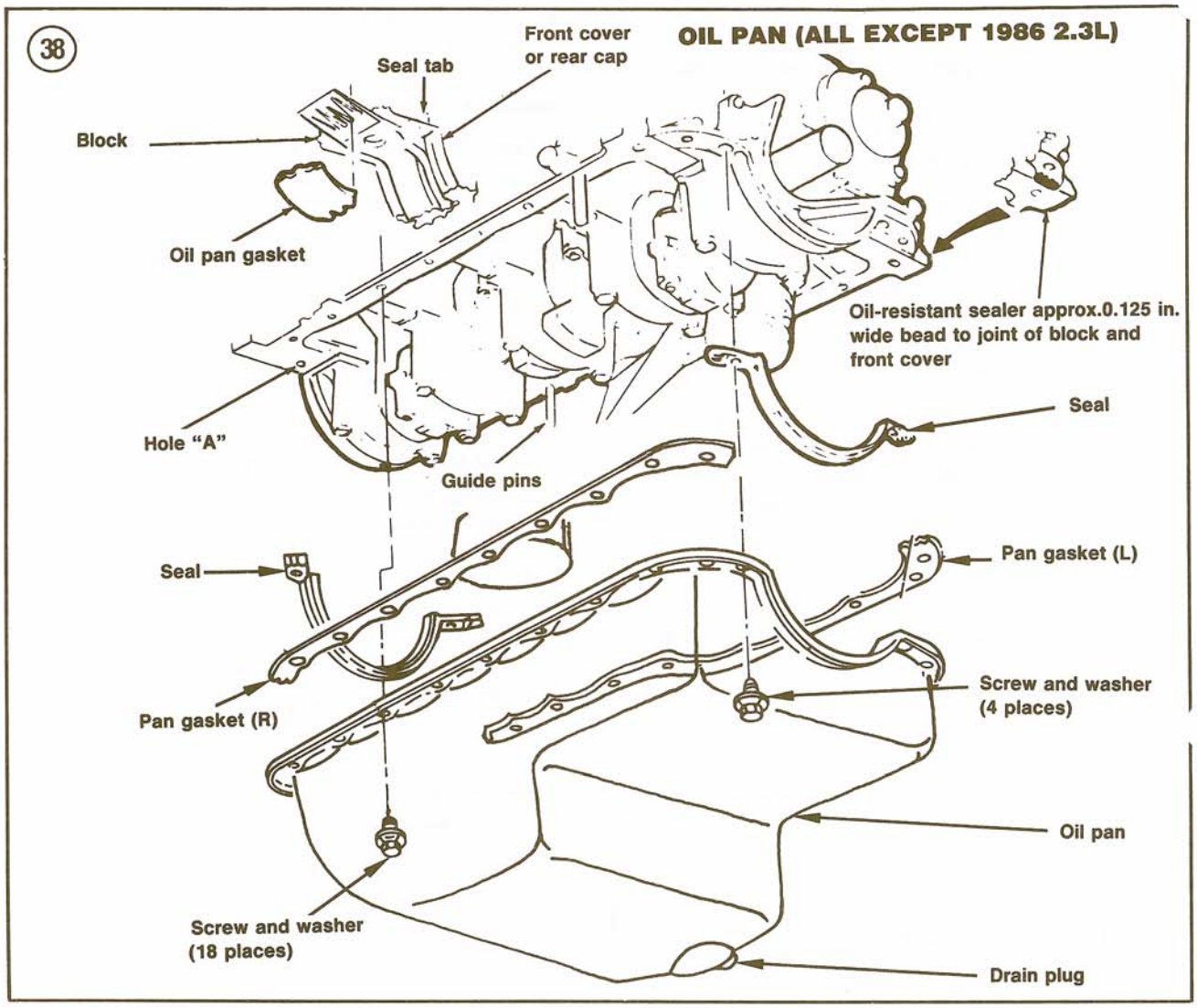

dry past the wet stage, then install gaskets to oil pan flange (**Figure 38**).

b. Apply sealer to the joint between the cylinder block and front cover and to the joint between the block and rear main bearing caps. Install front and rear seals (**Figure 38**). Install the rear seal before the sealer on the rear main bearing cap has cured.

4. Position the oil pan to the crossmember and install the oil pump and pickup tube assembly as described in this chapter.

5. Fit the oil pan and gasket against the cylinder block.

a. 1986 2.3L engine—Install all pan-to-block bolts loosely. Position oil pan so that the pan-to-clutch housing bolts or pan-to-converter housing bolt holes align. Install these 2 bolts, tighten to 30-39 ft.-lb. (40-54 N•m) and back off 1/2 turn. Tighten the pan-to-block bolts to 90-120 in.-lb. (10-13.5 N•m) and retighten the pan-to-clutch or converter housing bolts to 30-39 ft.-lb. (40-54 N•m).

b. All others—Install the 4 small oil pan screws as shown in **Figure 38**. Check oil pan and gasket for proper alignment with remaining attaching holes. Install the 14 large fasteners. Start at hole A shown in **Figure 38** and tighten all fasteners in a clockwise pattern to specifications (**Table 4**).

6. Reverse Steps 1-17 of *Removal* in this chapte to complete installation.

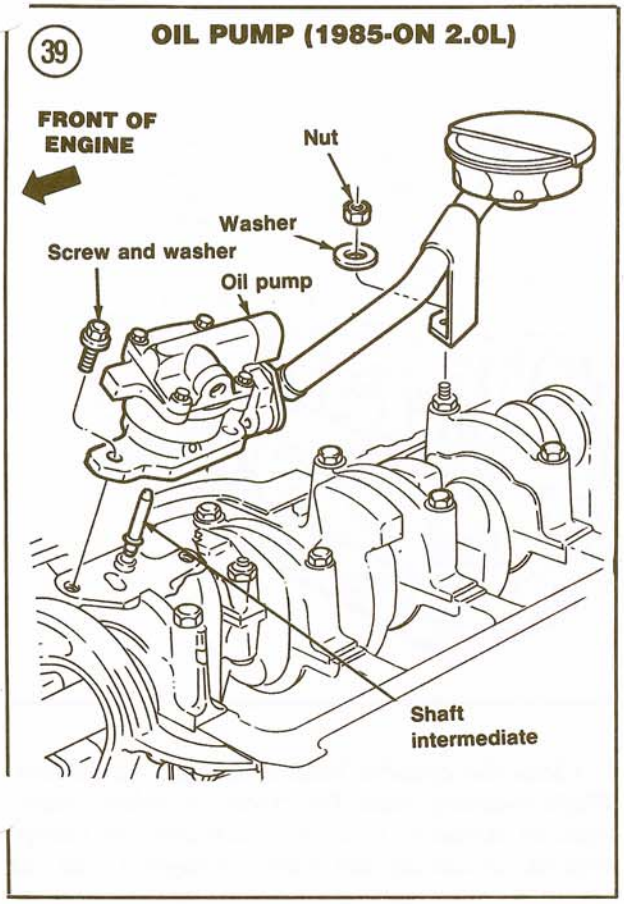

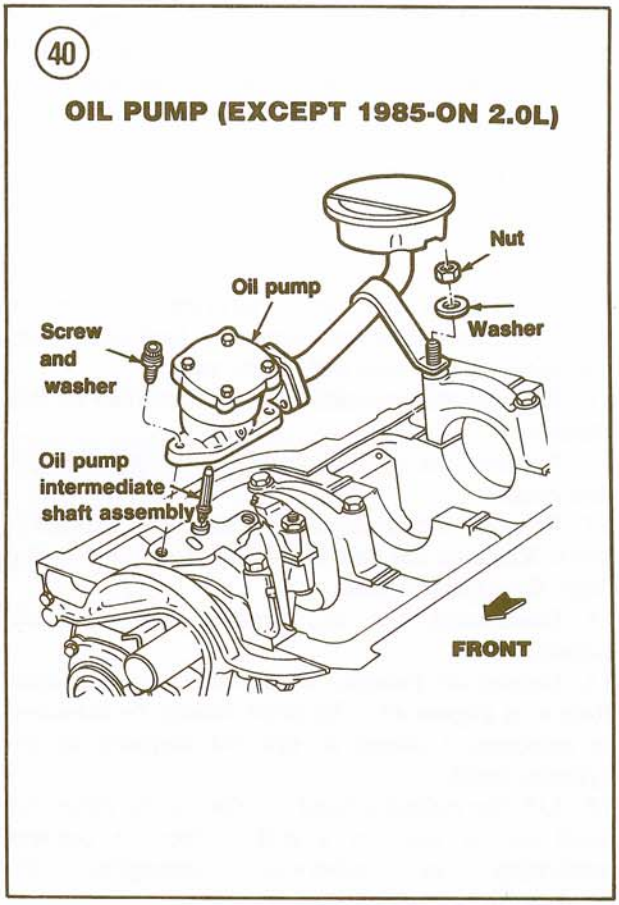

OIL PUMP

The oil pump is mounted inside the oil pan and is serviced as an assembly. Under no circumstances should the oil pump be disassembled.

Removal/Installation

Refer to **Figure 39** (1985-on 2.0L) or **Figure 40** (all others) for this procedure.

1. If the engine is in the vehicle, remove the oil pan as described in this chapter.
2. If the engine is out of the vehicle, remove the oil pan fasteners. Remove the oil pan and discard the gasket(s) and seals.
3. Remove the main bearing cap nut and washer holding the pickup tube bracket.
4. Remove the 2 pump attaching screws and ashers. Remove the oil pump and intermediate shaft assembly.

NOTE

Prime the pump by filling it with engine oil and rotating the pump drive shaft to circulate oil throughout the pump before installation.

5. Installation is the reverse of removal. Tighten the pump attaching screws to 14-21 ft.-lb. (19-28 N•m) and the bracket nut to 28-40 ft.-lb. (38-54 N•m).

CYLINDER HEAD

Removal

1. Disconnect the negative battery cable.
2. Drain the cooling system. See Chapter Seven.
3. Fuel injected engine—Remove the intake manifold assembly as described in this chapter.
4. Carburetted engine—Remove the air cleaner assembly. See Chapter Six.
5. Remove the valve cover as described in this chapter.
6. Carburetted engine—Remove the intake manifold assembly with carburetor attached as described in this chapter.

7. Loosen the alternator adjustment and pivot bolts. Remove the drive belt from the pulley. Remove the mounting bracket bolts from the cylinder head.
8. Disconnect the upper radiator hose at the engine and radiator. Remove hose from engine compartment.
9. Remove the camshaft belt outer cover as described in this chapter.
10. If equipped with power steering, remove the pump without disconnecting any hydraulic lines and place to one side out of the way.
11. Remove the camshaft belt as described in this chapter.
12. Remove the exhaust manifold as described in this chapter.
13. Remove the camshaft belt idler and 2 bracket bolts. Remove the camshaft belt idler stop spring from the cylinder head.
14. Disconnect the oil sending unit electrical connector.
15. Loosen the cylinder head bolts in the sequence shown in **Figure 41**. The bolts should be loosened in progressive stages to prevent warping of the cylinder head.
16. Lift the cylinder head off the block. Place the head on its side on a soft surface to prevent scratching or otherwise damaging the head-to-block mating surface.
17. Remove and discard the gasket.

Decarbonizing

1. Without removing the valves, remove all deposits from the combustion chambers, intake ports and exhaust ports. Use a fine wire brush dipped in solvent or make a scraper from hardwood. Be careful not to scratch or gouge the combustion chambers.
2. After all carbon is removed from the combustion chambers and ports, clean the entire head in solvent.
3. Clean away all carbon on the piston tops. Do not remove the carbon ridge at the top of each cylinder bore.
4. Clean all bolt holes. Use a cleaning solvent to remove dirt and grease.

Inspection

1. Check the cylinder head for signs of oil or coolant leaks before cleaning.

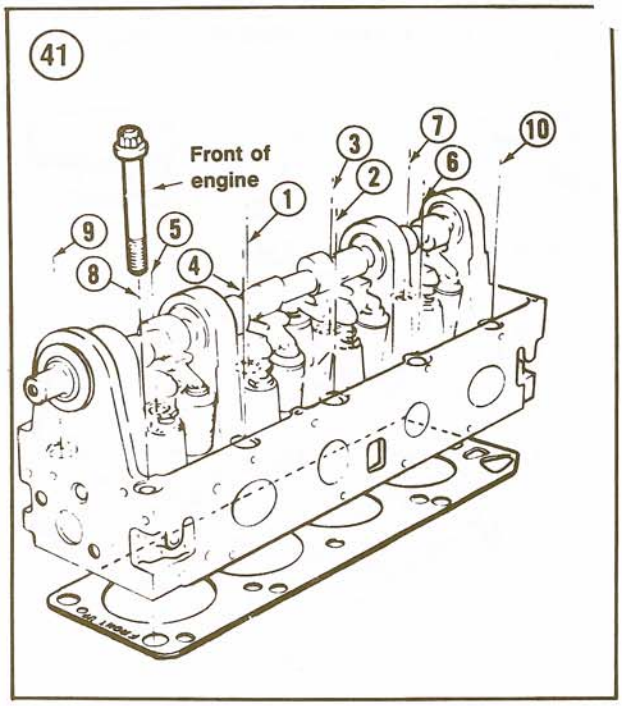

2. Clean the cylinder head thoroughly in solvent. While cleaning, look for cracks or other visibl signs of damage. Look for corrosion or foreign material in the oil and water passages. Clean the passages with a stiff spiral brush, then blow them out with compressed air.
3. Check the cylinder head studs for damage and replace if necessary.
4. Check the spark plug holes for damaged threads. Have repairs made by a dealer, if required.
5. Check the cylinder head bottom (block mating) surface for flatness. Place an accurate straightedge along its surface. If there is any gap, measure it with a feeler gauge (**Figure 42**). Measure lengthwise and diagonally across the hood. Maximum permissible head warp is 0.003 in. for any 6 in. surface of the head length or 0.006 in. overall. Have the head milled by a Ford dealer or competent machine shop if cylinder head warpage is excessive. A maximum of 0.010 in. may be removed from the head.

Installation

1. Be sure the cylinder head, engine block mating surfaces and cylinder bores are clean and free of deposits, sealant or other debris. Check all visible oil passages in the cylinder head and engine blo for cleanliness.

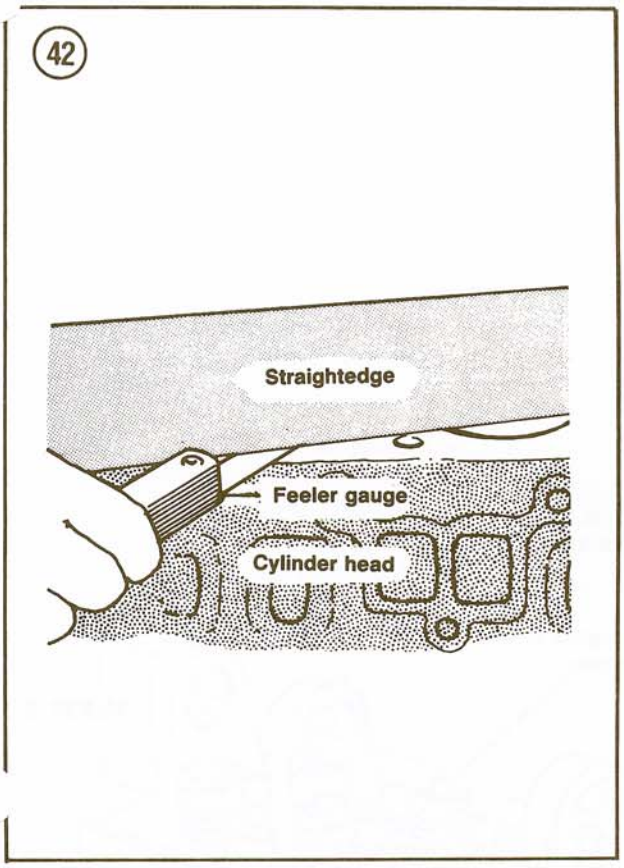

2. Install a new cylinder head gasket on the block mounting dowels.
3. Position the cylinder head on the block and align with the head gasket. If old head bolts are being reinstalled, coat threads with engine oil (new bolts have a preservative coating). Install the head bolts in their mounting holes and insert through the head gasket into the engine block.

NOTE

If the head and gasket are difficult to align, make guide pins by cutting the heads off 2 extra cylinder head bolts. Install the guide pins in diagonally opposite mounting holes in the block. Be sure the guide pins will protrude far enough through the top of the head to perermit removal once the head is in place.

4. Tighten the cylinder head bolts in the sequence shown in **Figure 41**. Tighten bolts in 2 stages:
   a. Step 1—50-60 ft.-lb. (68-81 N•m).
   b. Step 2—80-90 ft.-lb. (108-122 N•m).
5. Reverse Steps 1-14 of *Removal* to complete installation.

CAMSHAFT

Removal/Installation

Refer to **Figure 43** for this procedure.
1. Remove the camshaft belt outer cover and belt as described in this chapter.
2. Remove the valve cover as described in this chapter.
3. Check camshaft end play before removal. Push the camshaft as far as it will go toward the rear of the engine. Install a dial indicator on the front of the cylinder head with its plunger touching the front of the camshaft sprocket. Set the indicator gauge to zero, then pry the camshaft forward as far as possible with a large screwdriver. If the dial gauge reading exceeds 0.009 in., replace the camshaft retaining (thrust) plate during installation.
4. Remove the rocker arms as described in this chapter.
5. Remove the camshaft sprocket and seal as described in this chapter.
6. Remove the retaining (thrust) plate from the rear camshaft support stand of the cylinder head.
7. Carefully remove the camshaft from the cylinder head support stands with a rotating motion. Do not let the cam lobes touch or nick the bearings.
8. Installation is the reverse of removal. Dip the camshaft completely in engine oil before installation. Carefully install the camshaft with a rotating motion to prevent bearing damage. Tighten the retaining plate retaining screws to 6-9 ft.-lb. (8-12 N•m). Align all timing marks as described for camshaft belt installation.

Inspection

1. Check all machined surfaces of the camshaft for nicks or grooves. Minor defects may be removed with a smooth oilstone. Severe damage or wear beyond that specified in **Table 1** requires replacement of the camshaft.

2. Measure the inner diameter of the camshaft bearings, being careful not to damage the bearing material. Compare this measurement with the specifications in **Table 1**. If the bearings are excessively worn, grooved, pitted or scored, have

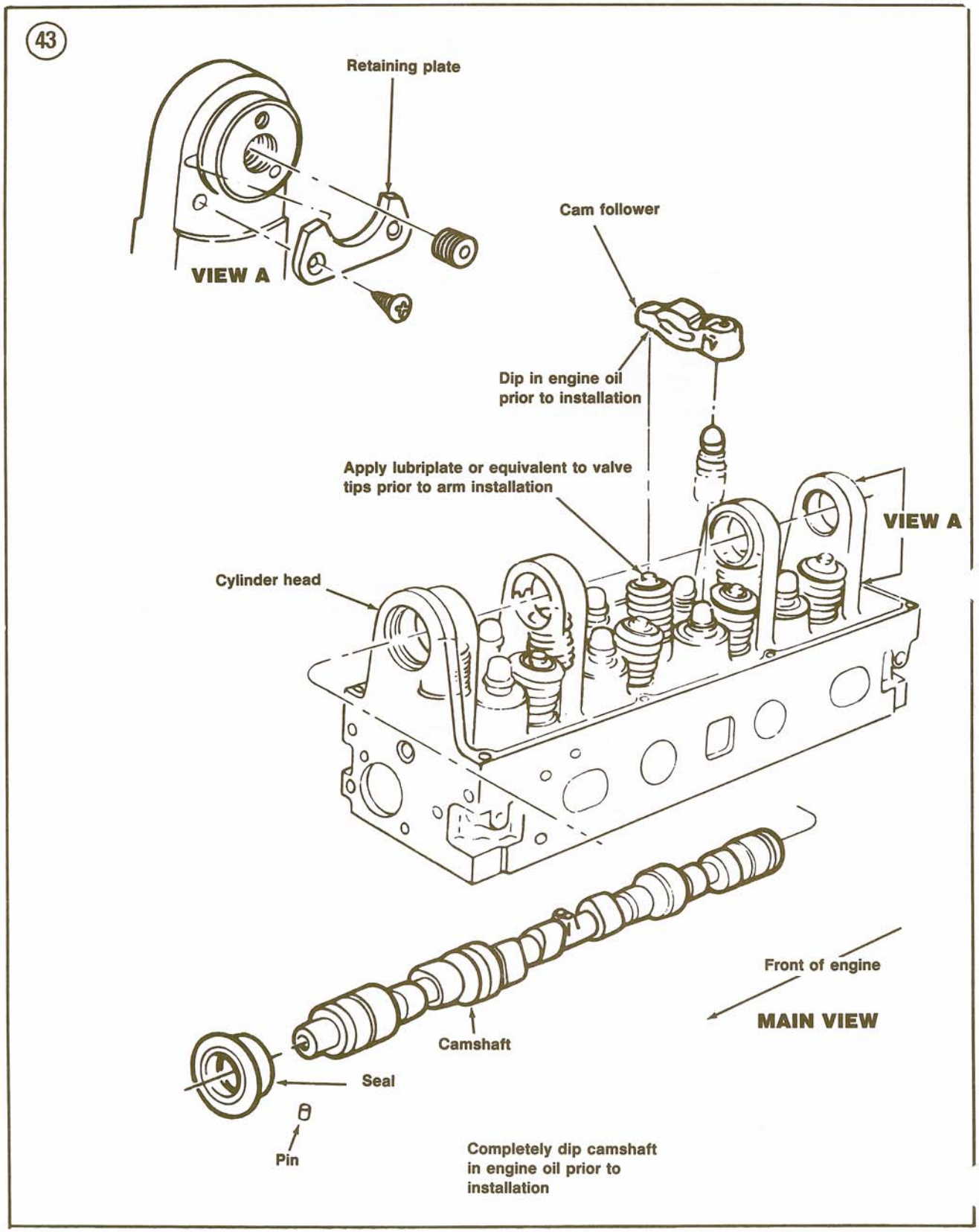
43
Retaining plate
VIEW A
Cam follower
Dip in engine oil prior to installation
Apply lubriplate or equivalent to valve tips prior to arm installation
VIEW A
Cylinder head
Front of engine
MAIN VIEW
Camshaft
Seal
Pin
Completely dip camshaft in engine oil prior to installation

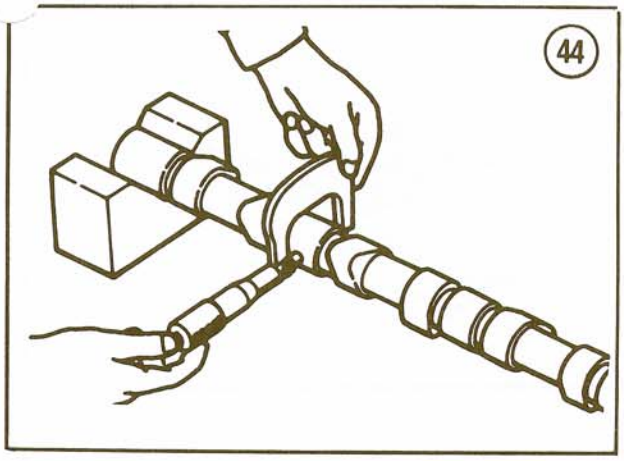

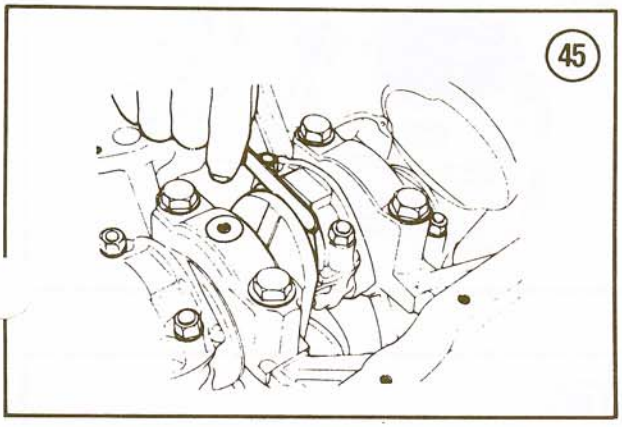

them replaced by a Ford dealer or competent machine shop.

CAUTION

All camshaft bearings should be replaced, even if only one bearing is worn. If not, the camshaft may be out of alignment when reinstalled.

3. Measure the outer diameter of the camshaft journals with a micrometer (**Figure 44**). Compare this measurement with the specifications in **Table 1**. Replace the camshaft if the journals exceed the wear or out-of-round specifications.
4. Subtract the journal diameter measurement from the bearing diameter measurement to determine the bearing-to-journal clearance. If this clearance exceeds that specified in **Table 1**, either the camshaft bearings, the camshaft or both are worn and must be replaced. Compare both the ·urnal and bearing measurements with .cifications to determine which must be replaced.

VALVES AND VALVE SEATS

Service to the valves, valve seats and guides should be done by a dealer or a machine shop, since the procedures involved require special knowledge and expensive machine tools. A general practice among those who do their own service is to remove the cylinder head, perform all disassembly except valve removal, and take the head to a machine shop for inspection and service. Since the cost is low relative to the required effort and equipment, this is usually the best approach, even for experienced mechanics.

PISTON/CONNECTING ROD ASSEMBLY

Piston/Connecting Rod Removal

1. Remove the cylinder head and oil pan as described in this chapter.
2. Pack the cylinder bores with clean shop rags. Remove the carbon ridge at the top of each bore with a ridge reamer. These can be rented for use. Vacuum out the shavings, then remove the shop rags.
3. Rotate the crankshaft so the connecting rod is centered in the bore.
4. Measure the clearance between each connecting rod and the crankshaft journal flange with a feeler gauge (**Figure 45**). This is connecting rod big-end play or side clearance. If the clearance exceeds specifications in **Table 1**, replace the connecting rod.

NOTE

*Mark the cylinder number on the top of each piston with quick-drying paint. Check for cylinder numbers or identification marks on the connecting rod and cap. If they are not visible, make your own (**Figure 46**).*

5. Remove the nuts holding the connecting rod cap. Lift off the cap, together with the lower bearing insert.

NOTE

If the connecting rod caps are difficult to remove, tap the studs with a wooden hammer handle.

6. Use the wooden hammer handle to push the piston and connecting rod from the bore.
7. Remove the piston rings with a ring remover (**Figure 47**).

Piston Pin Removal/Installation

The piston pins are press-fitted to the connecting rods and hand-fitted to the pistons. Removal requires the use of a press and support stand. This is a job for a dealer or machine shop equipped to fit the pistons to the pins, ream the pin bushings to the correct diameter and install the pistons and pins on the connecting rods.

Piston Clearance Check

Unless you have precision measuring equipment and know how to use it properly, have this procedure done by a machine shop.
1. Measure the piston diameter with a micrometer (**Figure 48**) at the piston pin centerline height, 90° to the piston pin axis.
2. Measure the cylinder bore diameter with a bore gauge (**Figure 49**). Measure at the top, center and bottom of the bore, in front-to-rear and side-to-side directions.
3. Subtract the piston diameter from the largest cylinder bore reading to determine piston clearance. If it exceeds the specifications in **Table 1**, the cylinder must be rebored and an oversized piston installed.

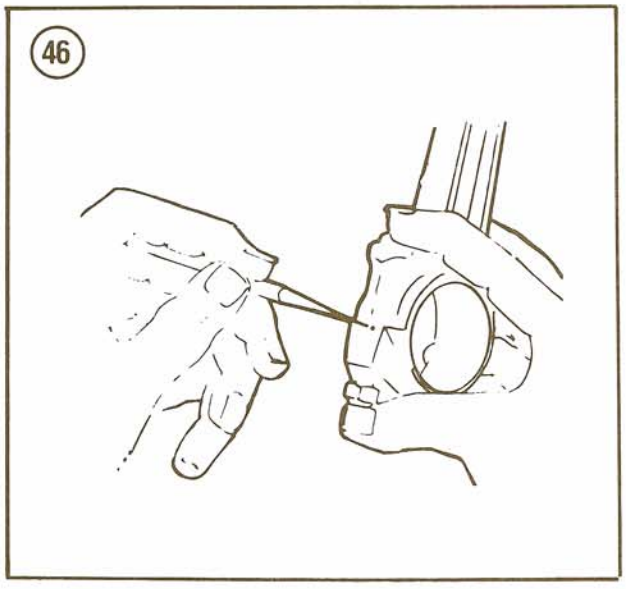

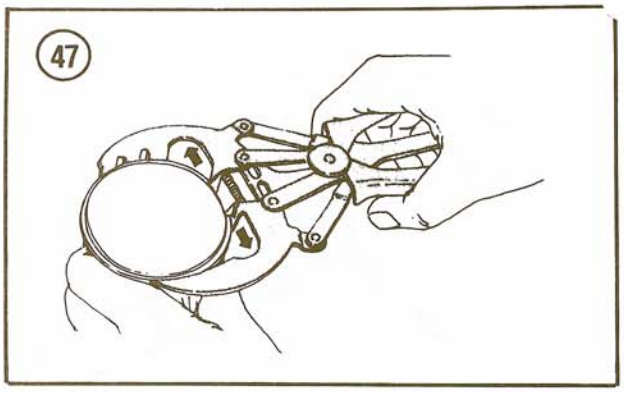

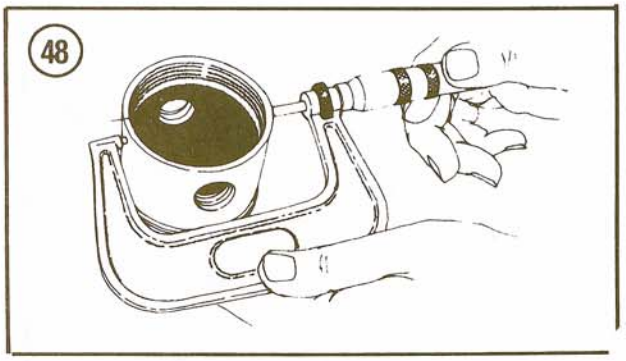

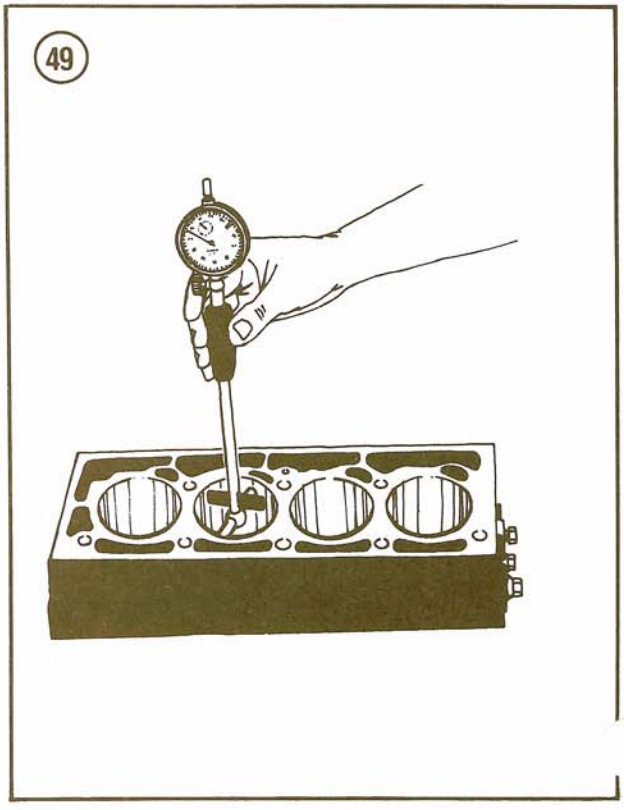

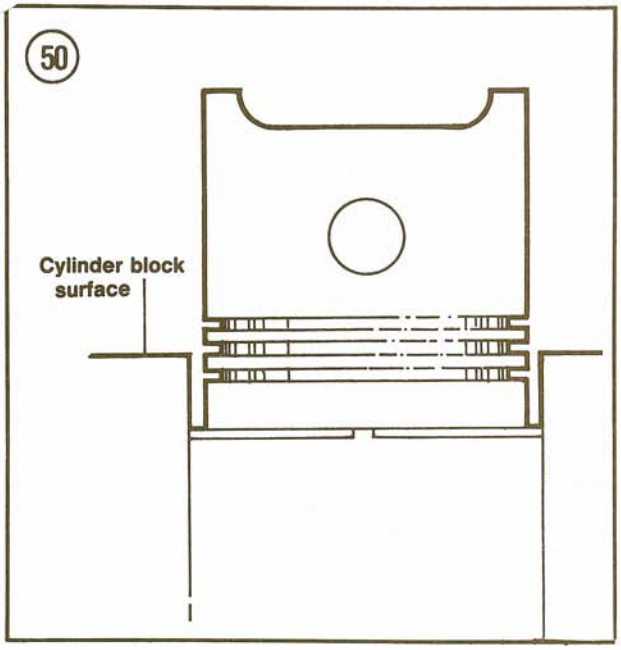

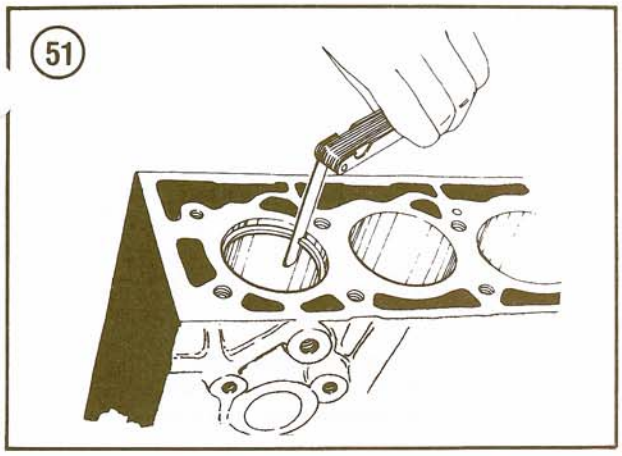

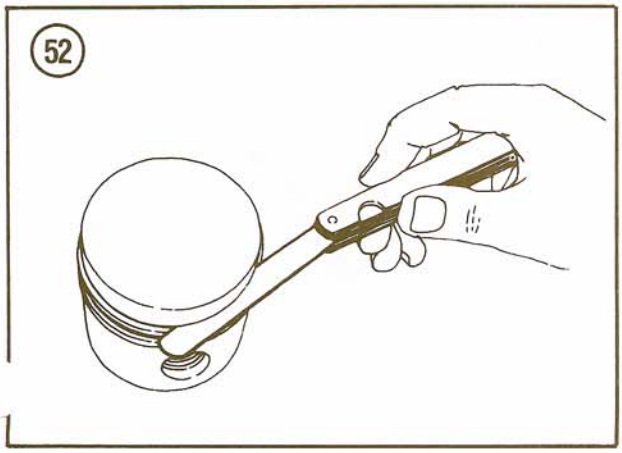

Piston Ring Fit/Installation

1. Check the ring gap of each piston ring. To do this, position the ring at the bottom of the ring travel area and square it by tapping gently with an inverted piston. See **Figure 50**.

NOTE

If the cylinders have not been rebored, check the gap at the bottom of the ring travel, where the cylinder is least worn.

2. Measure the ring gap with a feeler gauge as shown in **Figure 51**. Compare with specifications in **Table 1**. If the measurement is not within specifications, the rings must be replaced as a set. Check gap of new rings and file ring ends if gap is too small.
3. Check the side clearance of the compression rings as shown in **Figure 52**. Place the feeler gauge beneath the ring and insert it all the way into the ring groove. Side clearance should be 0.002- 0.004 in. The feeler gauge should slide all the way around the piston without binding. Any wear that occurs will form a step at the inner portion of the ring groove's lower edge. If large steps are discernable (**Figure 53**), either the rings or the ring grooves are worn. Inspect and replace as necessary.

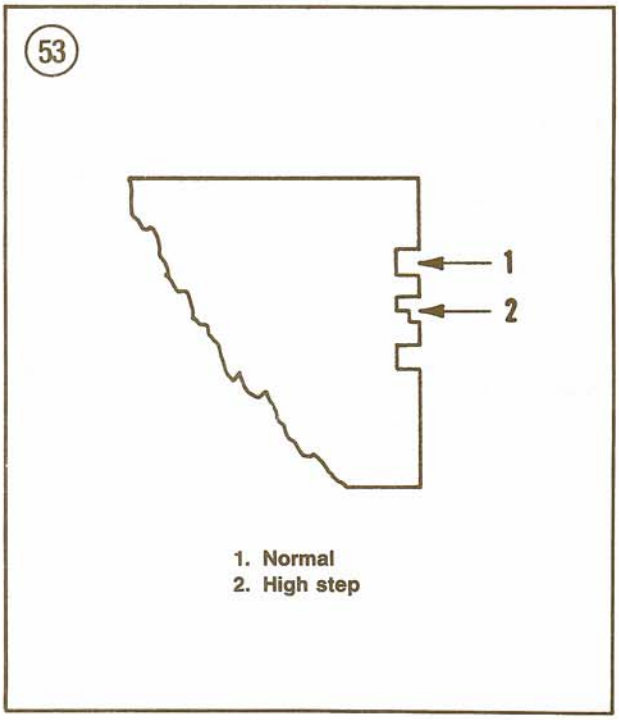

4. Using a ring expander tool (**Figure 54**), carefully install the oil control ring, then the compression rings.
5. Position the ring gaps as shown in **Figure 55**.

Connecting Rod Inspection

Have the connecting rods checked for straightness by a dealer or a machine shop.

Connecting Rod Bearing Clearance Measurement

1. Place the connecting rods and upper bearing halves on the proper connecting rod journals.
2. Cut a piece of Plastigage the width of the bearing. Place the Plastigage on the journal, then install the lower bearing half and cap.

NOTE

Do not place Plastigage over the journal oil hole.

3. Tighten the connecting rod cap to specifications (**Table 4**). Do not rotate the crankshaft while the Plastigage is in place.
4. Remove the connecting rod caps. Bearing clearance is determined by comparing the width of the flattened Plastigage to the markings on the envelope. See **Figure 56**. If the clearance is excessive, the crankshaft must be reground and undersize bearings installed.

Piston/Connecting Rod Installation

1. Make sure the pistons are correctly installed on the connecting rods.
2. Make sure the ring gaps are positioned as shown in **Figure 55**.
3. Slip short pieces of hose over the connecting rod studs to keep them from nicking the crankshaft. Tape will work if you do not have the right diameter hose, but it is more difficult to remove.
4. Immerse the entire piston in clean engine oil. Coat the cylinder wall with oil.

CAUTION

Use extreme care in Step 5 to prevent the connecting rod from nicking the crankshaft journal.

5. Install the piston/connecting rod assembly in its cylinder with a piston ring compressor tool as

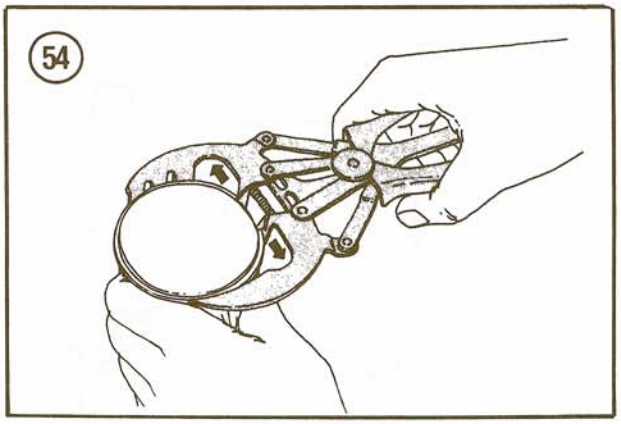

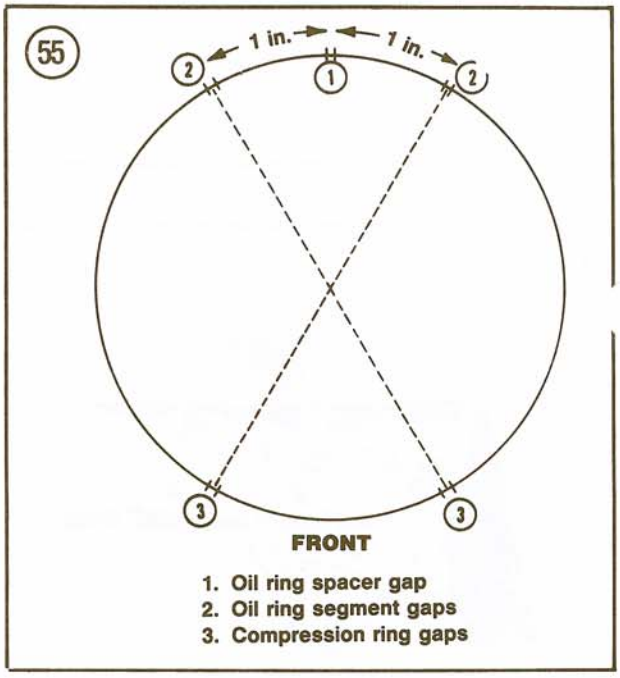

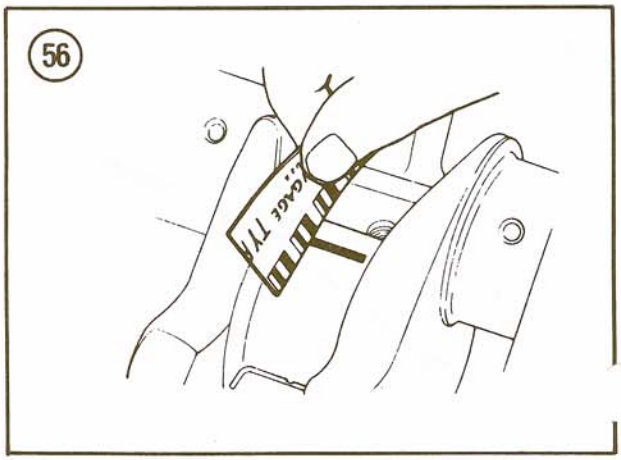

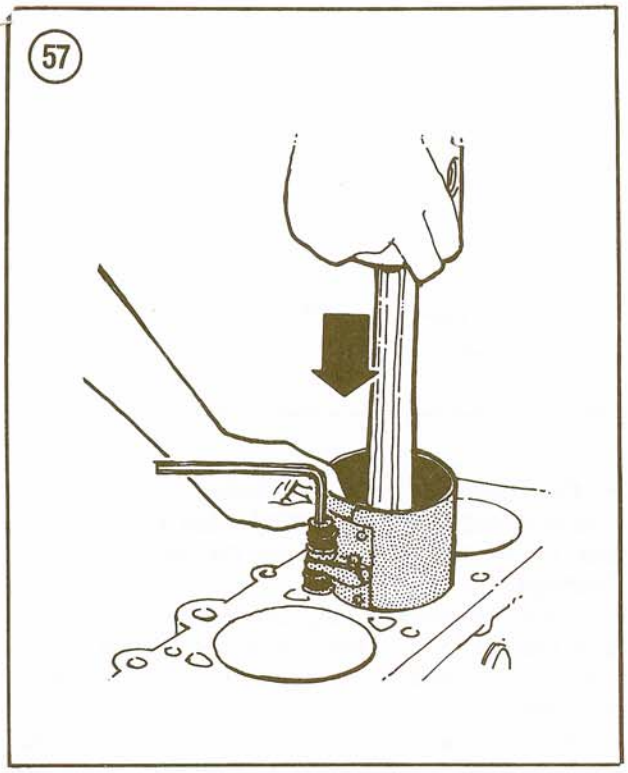

shown in **Figure 57**. Tap lightly with a wooden hammer handle to insert the piston. Be sure the connecting rod number corresponds to the cylinder number, counting from the camshaft belt end of the engine.

NOTE

Install piston with notch in the piston head facing toward the front of the engine.

6. Clean the connecting rod bearings carefully, including the back sides. Coat the journals and bearings with clean engine oil. Place the bearings in the connecting rod and cap.
7. Turn the crankshaft throw to the bottom of its stroke. Push the piston downward until the connecting rod bearing seats on the crankshaft journal.
8. Remove the protective hose or tape and install the connecting rod cap. Make sure the rod and cap marks align.
9. Lightly lubricate the connecting rod bolt threads with SAE 30W engine oil and install the cap nuts finger-tight, then tighten the nuts to specifications (**Table 4**).
10. Check the connecting rod big-end play as described in Step 4 of *Piston/Connecting Rod Removal.*

CRANKSHAFT

Removal

1. Remove the engine as described in this chapter.
2. Remove the camshaft belt outer cover, camshaft belt, crankshaft sprocket and camshaft belt cover oil seal as described in this chapter.
3. Remove the spark plug wires from the spark plugs, then remove the spark plugs from the cylinder head.
4. Remove the flywheel (manual) or drive plate (automatic) from the rear of the crankshaft as described in this chapter, then remove the engine rear cover plate.
5. Remove the oil pan and oil pump as described in this chapter.
6. Check crankshaft end play. Use a large screwdriver or pry bar to force the crankshaft toward the rear of the engine as far as possible, then install a dial indicator on the engine block so that its contact point rests against the crankshaft flange. Set the indicator to zero and force the crankshaft forward. Compare the reading to specifications (**Table 1**). If end play is less than specified, check the No. 3 (thrust) bearing surfaces for scratches, nicks, burrs or dirt. If end play is excessive, replace the No. 3 bearing during installation.
7. Unbolt and remove the connecting rod bearing caps and bearing inserts. Move the rod/piston assemblies away from the crankshaft.

NOTE

If the caps are difficult to remove, lift the bolts partway out, then use the bolts as levers to pry the caps.

8. Check the main bearing caps for identification numbers or marks. If none are visible, clean the caps with a wire brush. If marks still cannot be seen, make your own with quick-drying paint. Mark them with a number and an arrow indicating "front."
9. Unbolt and remove the main bearing caps with bearing inserts. Mark the backs of the bearing inserts with the same identification number as the caps.
10. Lift the crankshaft from the engine block and place it on a clean workbench.
11. Remove the bearing inserts from the block. Place the bearing caps and inserts in order on a clean workbench.

Inspection

1. Clean the crankshaft thoroughly with solvent. Blow out the oil passages with compressed air.

NOTE
If you do not have precision measuring equipment, have a machine shop perform Step 2

2. Check the crankpins and main bearing journals for wear, scoring and cracks. Check all journals against specifications (**Table 1**) for out-of-roundness and taper. See **Figure 58**. If necessary, have the crankshaft reground and install undersize bearings.

Main Bearing Clearance Measurement

Main bearing clearance is measured with Plastigage in the same manner as the connecting rod bearing clearance, described in this chapter. If wear exceeds that specified in **Table 1**, a 0.001 or 0.002 in. undersize bearing may be used on one-half of the journal in combination with the standard bearing on the other half. If undersize bearings are used on more than one journal, the undersize bearing should be installed in the cylinder block, not in the main bearing cap. If this does not produce the correct crankshaft-to-main bearing clearance, the crankshaft should be refinished by a Ford dealer or a competent machine shop and undersized main bearings installed.

Installation

1. Install a new rear oil seal as described in this chapter.
2. With the main bearings removed from the bearing caps and cylinder block, clean the main bearing bores in the block, the main bearing caps and main bearing inserts with lacquer thinner to remove all contamination.
3. If the old main bearings are being reinstalled, be sure they are reinstalled in the main bearing caps and cylinder block bores from which they were removed. If new bearings (or undersize bearings) are being installed, be sure they are installed in the proper locations.
4. Make sure the bearing locating tangs are correctly positioned in the cylinder block and bearing cap notches.
5. Coat the main bearing surfaces and the crankshaft journals with clean, heavy engine oil.

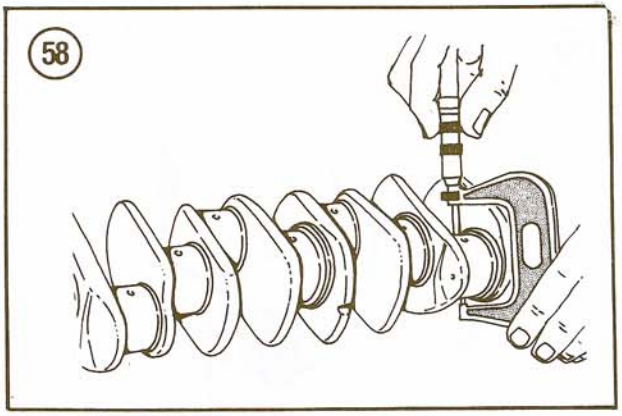

6. Carefully place the crankshaft in the main bearings installed in the cylinder block, taking care not to damage the sides of the No. 3 (thrust) bearings.
7. Install all main bearing caps, except the rear cap and the No. 3 cap. Make sure the arrows on the tops of the caps face toward the front of the engine.
8. Apply a 1/16 in. diameter of silicone rubber sealer to the areas of the cylinder block and rear main bearing cap shown in **Figure 59**.
9. Install the cap bolts and tighten from the center cap outward to specifications in **Table 4**.
10. Install the No. 3 bearing cap and tighten the bolts finger-tight.
11. Use a large screwdriver or pry bar to force the crankshaft as far to the rear of the block as possible and the No. 3 bearing cap as far to the front as possible. This aligns the 2 halves of the thrust bearing. Holding the crankshaft and thrust bearing cap in this position, tighten the cap bolts to specifications in **Table 4**.
12. Reinstall the connecting rods and caps on the crankshaft.
13. Rotate the crankshaft during tightening to make sure it is not binding. If the crankshaft becomes hard to turn, stop and find out why before continuing. Check for foreign material on bearings and journals. Make absolutely certain that bearings are the correct size, especially if the crankshaft has been reground. Never use undersize bearings if the crankshaft has not been reground.
14. Reverse Steps 1-5 of the removal procedure to complete installation.

REAR MAIN BEARING SEAL

Some early gasoline engines use a 2-piece rear crankshaft seal; all others are fitted with a circular

59

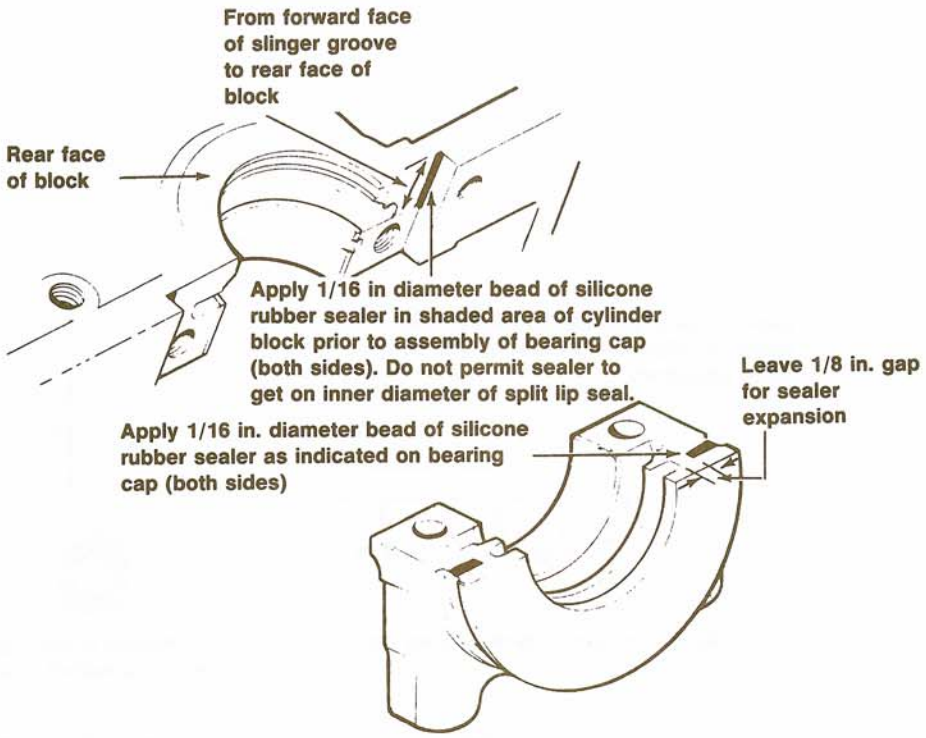

1-piece seal. Replacement procedures for both are provided.

CAUTION

Make sure no rubber is shaved from the outside of the seals by the groove edges in the cylinder block or rear main bearing cap during installation. Do not allow any engine oil to drip on the area of the cylinder block or rear main bearing cap to which silicone rubber sealer will be applied later.

Two-piece Rear Seal Replacement

1. Remove the rear main bearing cap. Remove the 2 halves of the crankshaft rear oil seal from the cylinder block and the rear main bearing cap, then discard them.
2. Clean the rear oil seal grooves in the cylinder block and rear main bearing cap with a brush and solvent such as lacquer thinner. Also clean the areas where silicone rubber sealer is to be applied before installing the rear main bearing cap to the cylinder block (**Figure 59**).
3. Dip the halves of the seal in clean engine oil.
4. Carefully install half of the seal in its groove in the cylinder block and the other half of the seal in its groove in the rear main bearing cap as shown in **Figure 60**. The lip of the installed seal must face the front of the engine as shown in **Figure 60**.
5. Apply a 1/16 in. diameter bead of silicone rubber sealer to the areas of the cylinder block and rear main bearing cap shown in **Figure 59**. Install the rear main bearing cap and tighten the cap bolts to specifications (**Table 4**).

One-piece Rear Seal Replacement

1. Remove the flywheel (manual) or drive plate (automatic) from the rear of the crankshaft as described in this chapter.
2. Install 2 sheet metal screws into the seal. Grasp the screws with pliers and pull the seal from the block.
3. Lubricate the new seal and seal mating surface with clean engine oil.
4. Fit the new seal on seal installer tool part No. T82L-6701-A and attach to the crankshaft using

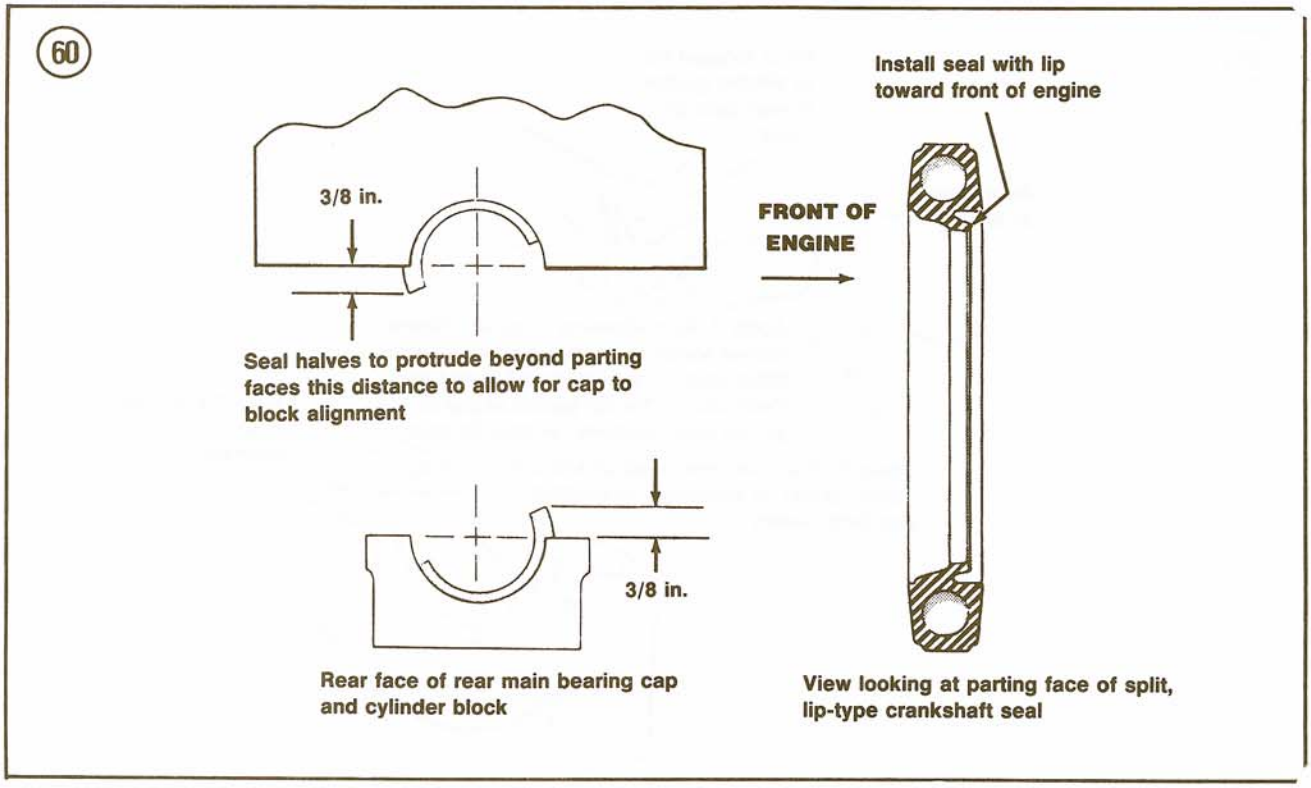

the 2 bolts supplied with the seal installer. See **Figure 61**.

5. Alternately tighten the bolts until the seal is seated within 0.005 in. (0.127 mm) of the rear face of the block.
6. Remove the seal installer tool and reinstall the flywheel or drive plate as described in this chapter.

FLYWHEEL OR DRIVE PLATE

Removal/Installation

Refer to **Figure 62** for this procedure.

1. Remove the engine as described in this chapter.
2. Remove the clutch from the flywheel on manual transmission models. See Chapter Nine.
3. Remove the 6 bolts holding the flywheel or drive plate to the crankshaft. Remove the flywheel/drive plate.
4. Installation is the reverse of removal. Gradually tighten flywheel/drive plate bolts to 56-64 ft.-lb. (73-87 N•m) in a diagonal pattern.

Inspection

1. Check the flywheel/drive plate for scoring, wear and heat damage (blue-tinted areas). If the surface is glazed or slightly scratched, have the flywheel resurfaced by a machine shop. Replace the flywheel if damage is severe or if more than 0.045 in. (1.143 mm) must be removed to restore the surface.
2. Measure flywheel runout with a dial indicator. Replace or resurface the flywheel if runout exceeds 0.005 in.

NOTE

The ring gear is an integral part of the drive plate on automatic transmission models. If defective, the entire assembly must be replaced.

3. Inspect the flywheel ring gear teeth. If the teeth are chipped, broken or excessively worn, have a new ring gear shrunk onto the flywheel by a machine shop.

PILOT BEARING

Engines fitted to manual transmissions are equipped with a sealed roller bearing clutch pilot. See **Figure 62**.

1. Remove the clutch and transmission. See Chapter Nine.

61

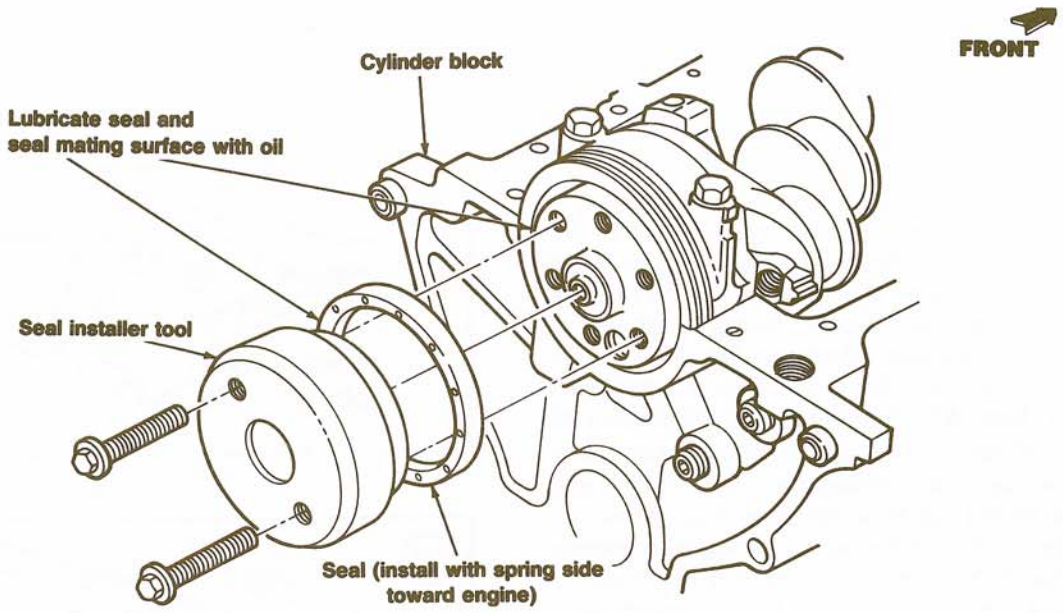
FRONT
Cylinder block
Lubricate seal and
seal mating surface with oil
Seal installer tool
Seal (install with spring side
toward engine)

62

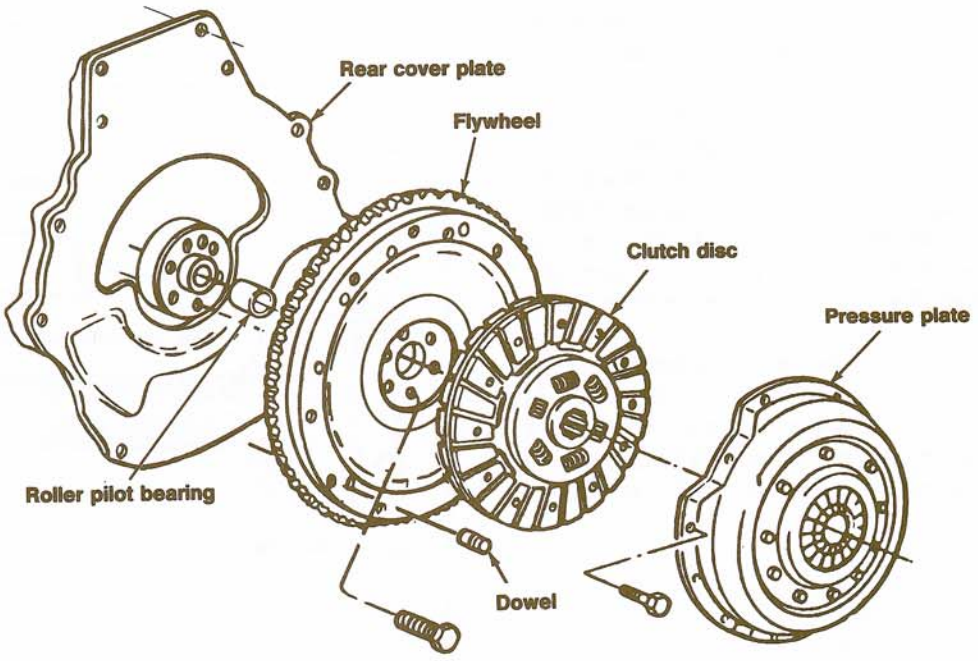
Rear cover plate
Flywheel
Clutch disc
Pressure plate
Roller pilot bearing
Dowel

2. Remove the bearing with Ford tool part No. T58L-101-A and a slide hammer.
3. Install the new bearing with Ford tool part No. T71P-7137-C.

CYLINDER BLOCK CLEANING AND INSPECTION

1. Clean the block thoroughly with solvent. Remove any RTV sealant residue from the machined surfaces. Check all core plugs for leaks and replace any that are suspect. See *Core Plug Replacement* in this chapter. Remove any plugs that seal oil passages. Remove the PCV baffle located between the No. 3 and No. 4 crankshaft journals (**Figure 63**), if so equipped. Check oil and coolant passages for sludge, dirt and corrosion while cleaning. If the passages are very dirty, have the block boiled out by a machine shop. Blow out all passages with compressed air. Check the threads in the head bolt holes to be sure they are clean. If dirty, use a tap to true up the threads and remove any deposits.
2. Examine the block for cracks. To confirm suspicions about possible leak areas, use a mixture of 1 part kerosene and 2 parts engine oil. Coat the suspected area with this solution, then wipe dry and immediately apply a solution of zinc oxide dissolved in wood alcohol. If any discoloration appears in the treated area, the block is cracked and should be replaced.
3. Check flatness of the cylinder block deck or top surface. Place an accurate straightedge on the block. If there is any gap between the block and straightedge, measure it with a feeler gauge (**Figure 64**). Measure from end to end and from corner to corner. If gap exceeds 0.002 in. (0.05 mm), have the block resurfaced. Do not remove more than 0.010 in. (0.254 mm) from the surface.
4. Measure the cylinder bores with a bore gauge as described in Step 2, *Piston Clearance Check* in this chapter. If the cylinders exceed maximum tolerances, they must be rebored. Reboring is also necessary if the cylinder walls are badly scuffed or scored.

NOTE

Before reboring cylinders, install all main bearing caps and tighten the cap bolts to specifications in ***Table 4*** *to prevent distortion of the main bearing bores.*

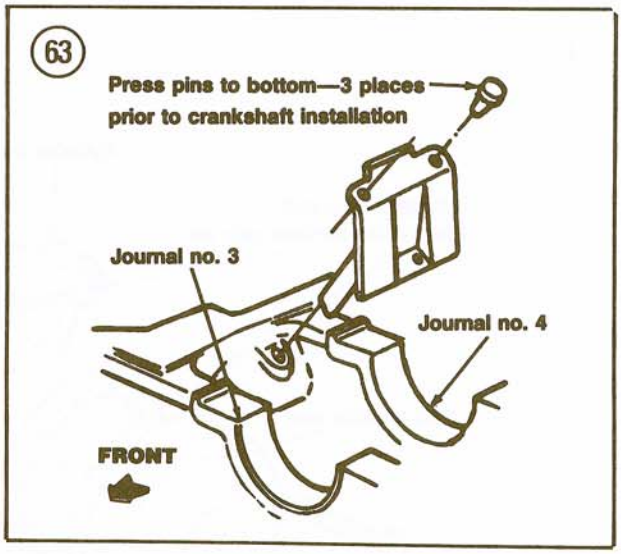

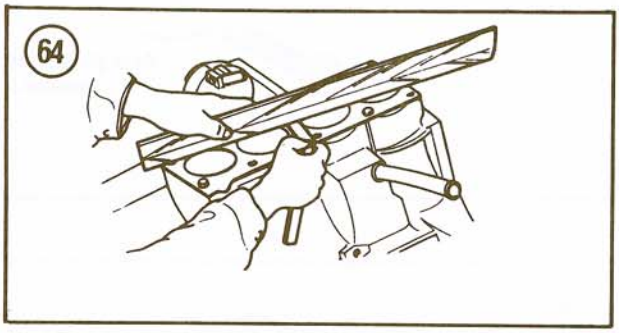

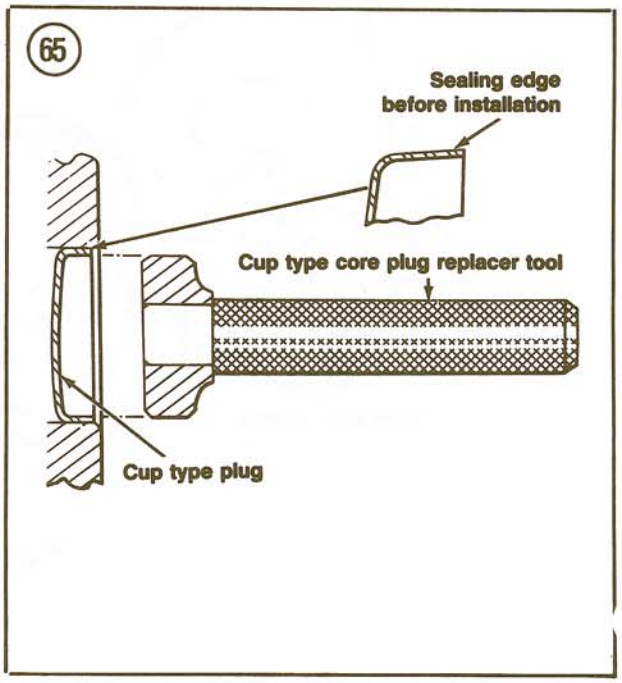

CORE PLUGS

The condition of all core plugs in the block and cylinder head should be checked whenever the engine is out of the vehicle for service. If any signs of leakage or corrosion are found around one core plug, replace them all.

Cup-type core plugs must be installed with the flanged edge facing outward. See **Figure 65**. Since the maximum diameter of this type of plug is at the outer edge of the flange, the plug must be installed with a properly designed tool (**Figure 65**). If driven into the bore with a tool which contacts the plug flange, damage may occur to the sealing edge. This can result in leakage or a plug blow-out.

Removal/Installation

CAUTION

Do not drive core plugs into the engine casting. It will be impossible to retrieve them and they can restrict coolant circulation, resulting in serious engine damage.

1. Drill a hole in the center of the plug and pry out with an appropriate size drift or pin punch. Work carefully to avoid damage to the plug bore. On large core plugs, the use of a universal impact slide hammer is recommended.
2. Clean the plug bore thoroughly and inspect for any damage that might interfere with proper sealing of the new plug. If damage is evident, true the surface by boring for the next oversize plug.

NOTE

Oversize plugs can be identified by an "OS" stamped in the flat on the cup side of the plug.

3. Coat the inside of the plug bore and the outer diameter of the new plug with sealer. Use an oil-resistant sealer if the plug is to be installed in an oil gallery or a water-resistant sealer for plugs installed in the water jacket.
4. Install the seal as shown in **Figure 65** with an appropriate core plug replacer tool. Tap the plug in place until its flanged edge is below the chamfered edge of the bore.

Table 1 GASOLINE ENGINE SPECIFICATIONS

Engine type	Inline 4-cylinder
Bore and stroke	
2.0L	3.518×3.126 in.
2.3L	3.780×3.126 in.
Firing order	1-3-4-2
No. 1 cylinder	Front
Cylinder numbering (front to rear)	1-2-3-4
Cylinder block	
Bore diameter	
2.0L	3.5165-3.5201 in.
2.3L	3.7795-3.7825 in.
Head gasket surface flatness	0.003 in. in any 6 in.; 0.006 in. overall
Out-of-round service limit	0.005 in.
Taper servici limit	0.010 in.
Main bearing bore diameter	2.5902-2.5910 in.
Distributor shaft bearing bore diameter	0.5155-0.5170 in.
Valve system	
Valve guide bore diameter	0.3433-0.3443 in.
Valve seat width	
Intake	0.060-0.080 in.
Exhaust	0.070-0.090 in.
Valve seat angle	45°
Valve seat runout limit	0.0016 in.
Valve arrangement (front to rear)	E-I-E-I-E-I-E-I

(continued)

Table 1 GASOLINE ENGINE SPECIFICATIONS (continued)

Valve system (cont.)	
Valve stem-to-guide clearance	
Intake	0.0010-0.0027 in.
Exhaust	0.0015-0.0032 in.
Service limit	0.0055 in. max.
Valve head diameter	
2.0L	
Intake	1.598-1.622 in.
Exhaust	1.370-1.390 in.
2.3L	
Intake	1.723-1.747 in.
Exhaust	1.490-1.510 in.
Valve face	
Runout limit	0.002 in. max.
Angle limit	44°
Valve stem diameter	
Standard	
Intake	0.3416-0.3423 in.
Exhaust	0.3411-0.3418 in.
0.015 in. oversize	
Intake	0.3566-0.3573 in.
Exhaust	0.3561-0.3568 in.
0.030 in. oversize	
Intake	0.3716-0.3723 in.
Exhaust	0.3711-0.3718 in.
Valve spring load (damper removed)	
2.0L	
Intake	71-79 lb. @ 1.52 in.
Exhaust	142-156 lb. @ 1.12 in.
2.3L	
Intake	
1983-1984	71-79 lb. @ 1.56 in.
1985-on	71-79 lb. @ 1.52 in.
Exhaust	
1983-1984	159-175 lb. @ 1.16 in.
1985-on	142-156 lb. @ 1.12 in.
Valve spring free length (approximate)	
2.0L	
1983-1984	1.922 in.
1985-on	1.877 in.
2.3L	
1983-1984	1.890 in.
1985-on	1.877 in.
Valve spring assembled height	
2.0L	1.49-1.55 in.
2.3L	
1983-1984	1 17/32-1 19/32 in.
1985-on	1.49-1.55 in.
Valve spring out-of-square	
service limit	0.078 in.
Camshaft	
Lobe lift	
2.0L	0.2381 in.
2.3L	0.2437 in.

(continued)

Table 1 GASOLINE ENGINE SPECIFICATIONS (continued)

Camshaft (cont.)	
Valve lift @ zero lash	
2.0L	0.3900 in.
2.3L	
1983-1984	0.3997 in.
1985-on	0.4000 in.
End play	0.001-0.007 in.
Service limit	0.009 in.
Journal-to-bearing clearance	0.001-0.003 in.
Service limit	0.006 in.
Journal diameter	1.7713-1.7720 in.
Journal runout limit	0.005 in. max.
Out-of-round limit	0.005 in. max.
Crankshaft	
Main bearing journal diameter	2.399-2.3982 in.
Out-of-round limit	0.006 in.
Taper limit	0.006 in. per inch max.
Journal runout limit	0.002 in. max.
Thrust bearing journal length	1.199-1.201 in.
Connecting rod journal	
Diameter	2.0462-2.0472 in.
Out-of-round limit	0.006 in. max.
Taper limit	0.0006 in. per inch max.
Main bearing thrust face	
Runout limit	0.001 in. max.
End play limit	0.004-0.008 in.
Service limit	0.012 in.
Main bearing clearance	
Desired	0.0008-0.0015 in.
Allowable	0.0008-0.0026 in.
Connecting rod	
Piston pin bore diameter	
2.0L	0.9096-0.9112 in.
2.3L	0.9123-0.9126 in.
Crankshaft bearing bore diameter	2.1720-2.1728 in.
Out-of-round limit	0.0004 in.
Taper limit	0.0004 in.
Length (center-to-center)	5.2031-5.2063 in.
Bearing clearance	
Desired	0.0008-0.0015 in.
Allowable	0.0008-0.0026 in.
Alignment	
Twist	0.024 in.
Bend	0.012 in.
Side clearance	
Standard	0.0035-0.0105 in.
Service limit	0.014 in.
Auxiliary shaft	
Bearing clearance to shaft	0.0006-0.0026 in.
End play	0.001-0.007 in.
Flywheel	
Clutch face runout limit	0.005 in.
Ring gear lateral runout	
Manual transmission	0.025 in.
Automatic transmission	0.060 in.

(continued)

Table 1 GASOLINE ENGINE SPECIFICATIONS (continued)

Piston	
Diameter	
Red code	
2.0L	3.5150-3.5156 in.
2.3L	3.7780-3.7786 in.
Blue code	
2.0L	3.5162-3.5168 in.
2.3L	3.7792-3.7798 in.
0.003 in. oversize	
2.0L	3.5174-3.5180 in.
2.3L	3.7804-3.7810 in.
Pin-to-bore clearance	0.0014-0.0022 in.
Pin bore diameter	0.9123-0.9126 in.
Ring groove width	
Compression	0.080-0.081 in.
Oil	
2.0L	
2.3L	0.188-0.189 in.
Piston pin	
Length	3.01-3.04 in.
Diameter	
Standard	0.9119-0.9124 in.
0.001 in. oversize	0.9130-0.9133 in.
0.003 in. oversize	0.9140-0.9143 in.
Piston-to-pin clearance	0.0002-0.0004 in.
Pin-to-rod clearance	Interference fit
Piston rings	
Ring width	
Compression	0.0770-0.0780 in.
Oil	Snug fit
Ring gap	
Compression	0.010-0.020 in.
Oil (steel rail)	0.015-0.055 in.

Table 2 2.2L DIESEL ENGINE SPECIFICATIONS

Engine type	Inline 4-cylinder
Bore and stroke	3.50×3.50 in.
Firing order	1-3-4-2
No. 1 cylinder	Front
Cylinder numbering (front to rear)	1-2-3-4
Compression pressure	384 psi @ 200 rpm
Valves	
Seat angle	
Intake	45°
Exhaust	30°
Seat width (intake & exhaust)	0.079 in. (2.0 mm)
Valve guide (protrusion from) head)	0.650 in. (16.5 mm)
Length	
Intake	4.508 in. (114.5 mm)
Exhaust	4.512 in. (114.6 mm)
Head diameter	
Intake	1.595 ±0.004 in. (40.5 ±0.1 mm)
Exhaust	1.417 ±0.005 in. (36 ±0.13 mm)

(continued)

Table 2 2.2L DIESEL ENGINE SPECIFICATIONS (continued)

Valves (cont.)	
Face angle	
Intake	45°
Exhaust	30°
Stem diameter (intake & exhaust)	0.3150 in. (8 mm)
Stem diameter limit	
Intake	0.3102 in. (7.880 mm)
Exhaust	0.3097 in. (7.867 mm)
Stem-to-guide clearance	
Intake	0.0015-0.0046 in. (0.038-0.116 mm)
Exhaust	0.002-0.0055 in. (0.051-0.129 mm)
Outer valve spring	
Wire diameter	0.177 in. (4.5 mm)
Coil diameter	1.496 in. (38 mm)
Free length	
Standard	1.807 in. (45.9 mm)
Limit	1.717 in. (43.6 mm)
Fitting length	1.587 in. (40.3 mm)
Fitting load	
Standard	39.7 ±2 lb. (171-189 N)
Limit	32 lb. (145 N)
Squareness limit	0.063 in. (1.60 mm)
Inner valve spring	
Wire diameter	0.138 in. (3.5 mm)
Coil diameter	1.083 in. (27.5 mm)
Free length	
Standard	1.736 in. (44.1 mm)
Limit	1.654 in. (42.0 mm)
Fitting length	1.488 in. (37.8 mm)
Fitting load	
Standard	28 ±1.3 lb. (121-133 N)
Limit	22.7 lb. (103 N)
Squareness limit	0.061 in. (1.54 mm)
Rocker arm bore	0.7188-0.7196
Rocker arm bushing	
Inner diameter	0.6221 in. (15.8 mm)
Outer diamter	0.7126 in. (18.1 mm)
Rocker arm shaft outer diameter	0.6234-0.6244 in. (15.835-15.860 mm)
Rocker arm clearance	
Standard	0.0006-0.0024 in. (0.016-0.061 mm)
Limit	0.0028 in. (0.07 mm)
Tappet	
Outer diameter	0.5600-0.5610 in. (14.224-14.249 mm)
Bore in cylinder block	0.5625-0.5637 in. (14.288-14.319 mm)
Clearance in block bore	
Standard	0.0015-0.0037 in. (0.039-0.095 mm)
Limit	0.0039 in. (0.10 mm)
Camshaft journal diameter	
No. 1	2.0473 in. (52 mm)
No. 2	2.0374 in. (51.75 mm)
No. 3	2.0177 in. (51.25 mm)

Table 3 2.3L TURBO DIESEL ENGINE SPECIFICATIONS

Engine type	Inline 4-cylinder
Bore and stroke	3.59×3.54 in.
Firing order	1-3-4-2
No. 1 cylinder	Front
Cylinder numbering (front to rear)	1-2-3-4
Compression pressure	384 psi @ 250 rpm
Cylinder head gasket surface flatness	0.004 in. (0.1 mm) max.
Rocker arm	
Inner diameter	0.744 in. (18.9 mm)
Oil clearance	0.0004-0.0016 in. (0.01-0.04 mm)
Connecting rod	
Length (center-to-center)	6.220 in. (158 mm)
Piston pin bore diameter	1.1423-1.2427 in. 29 ±0.05 mm)
Big end side clearance	0.004-0.010 in. (0.1-0.25 mm)
Valves	
Guide hole diameter	
0.002 in. (0.05 mm) OS	0.5138-0.5145 in. (13.050-13.068 mm)
0.010 in. (0.25 mm) OS	0.5217-0.5224 in. (13.250-13.268 mm)
0.020 in. (0.50 mm) OS	0.5315-0.5322 in. (13.500-13.518 mm)
Inlet valve ring hole seat diameter	
0.012 in. (0.3 mm) OS	1.7047-1.7057 in. (43.300-43.325 mm)
0.024 in. (0.6 mm) OS	1.7165-1.7175 in. (43.600-43.625 mm)
Exhaust valve ring hole seat diameter	
0.012 in. (0.3 mm) OS	1.4685-1.4695 in. (37.300-37.325 mm)
0.024 in. (0.6 mm) OS	1.4803-1.4813 in. (37.600-37.625 mm)
Valve guide installation height	0.591 in. (15 mm)
Valve diameter	
Intake	1.570 in. (40 mm)
Exhaust	1.339 in. (34 mm
Stem diameter (intake & exhaust)	0.3150 in. (8 mm)
Stem-to-guide clearance	
Intake	0.0012-0.0024 in. (0.03-0.06 mm)
Exhaust	0.0020-0.0035 in. (0.05-0.09 mm)
Margin	0.079 in. (2 mm)
Valve spring	
Free height	1.933 in. (49.1 mm)
Load	61 lb. @ 1.591 in. (270.7 N @ 40.4 mm)
Right silent shaft	
Journal diameter	
Front	0.728 in. (18.5 mm)
Rear	1.693 in. (43 mm)
Oil clearance	
Front	0.0008-0.0024 in. (0.2-0.6 mm)
Rear	0.0024-0.0039 in. (0.6-0.10 mm)
Left silent shaft	
Journal diameter	
Front	0.728 in. (18.5 mm)
Rear	1.693 in. (43 mm)
Oil clearance	
Front	0.0008-0.0020 in. (0.2-0.5 mm)
Rear	0.0020-0.0035 in. (0.5-0.09 mm)
Piston	
Diameter	3.587 in. (91.1 mm)
Piston-to-cylinder clearance	0.0016-0.0024 in. (0.04-0.06 mm)
Piston-to-pin clearance	0.0001-0.0002 in. (0.002-0.006 mm)

(continued)

Table 3 2.3L TURBO DIESEL ENGINE SPECIFICATIONS (continued)

Piston rings	
Gap	
Compression	0.010-0.016 in. (0.25-0.40 mm)
Oil	0.010-0.018 in. (0.25-0.45 mm)
Side clearance	
Compression	
No. 1	0.001-0.002 in. (0.02-0.04 mm)
No. 2	0.001-0.003 in. (0.02-0.07 mm)
Oil	0.001-0.003 in. (0.02-0.07 mm)

Table 4 GASOLINE ENGINE TORQUE SPECIFICATIONS

Fastener	ft.-lb.	N•m
Auxiliary shaft		
Cover bolt	6-9	8-12
Gear bolt	28-40	38-54
Thrust plate bolt	6-9	8-12
Belt tensioner		
Pivot bolt	28-40	38-54
Adjusting bolt	14-21	19-28
Camshaft		
Belt cover		
Outer bolt	6-9	8-12
Inner stud	14-21	19-28
Gear bolt	50-71	68-96
Thrust plate bolt	6-9	8-12
Check valve-to-manifold	17-20	24-27
Connecting rod nut		
Stage 1	25-30	34-41
Stage 2	30-36	41-49
Crankshaft damper bolt	100-120	136-162
Cylinder front cover bolt	6-9	8-12
Cylinder head bolt		
Stage 1	50-60	68-81
Stage 2	80-90	108-122
EGR tube nut	9-11	13-14
Exhaust manifold-to-head		
Stage 1	5-7	7-9
Stage 2	16-23	22-31
Flywheel-to-crankshaft bolt	56-64	73-87
Fuel pump-to-cylinder block	14-21	19-28
Intake manifold		
Carburetted engine		
Stage 1	5-7	7-9
Stage 2	14-21	19-28
Fuel injected engine		
Upper-to-lower manifold	15-22	20-30
Manifold-to-head	12-15	16-20
Main bearing cap bolt		
Stage 1	50-60	68-81
Stage 2	80-90	108-122

(continued)

Table 4 GASOLINE ENGINE TORQUE SPECIFICATIONS (continued)

Fastener	ft.-lb.	N·m
Oil pump		
To block	14-21	19-28
Pickup tube bracket nut	28-40	38-54
Oil pan		
Drain plug	15-25	21-33
Oil pan attaching bolts		
Cast aluminum pan		
To block	7.5-10	10-13.5
To transmission	30-39	40-54
Steel pan		
M6 bolts	6-8	7-11
M8 bolt	8-10	11-13
Oil filter insert	20-25	28-33
Valve cover-to-head	6-8	7-9
Water outlet bolt	14-21	19-28
Water pump-to-block bolt	14-21	19-28

Table 5 2.2L DIESEL ENGINE TORQUE SPECIFICATIONS

Fastener	ft.-lb.	N·m
Cylinder head bolts	80-85	110-117
Valve rocker cover	2.2-3.3	3.0-4-5
Oil pan	5.1-8.7	7-12
Glow plugs	7-11	10-15
Intake/exhaust manifolds	12-17	16-24
Injection pump mounting nuts and bolts	12-17	16-24
Injection nozzle	43-51	60-70
Crankshaft pulley	254-288	345-390
Rocker arm assembly	80-85	110-117
Main bearing cap	80-85	110-117
General torque specifications*		
6T bolt/nut		
6 mm	5-7	7-10
8 mm	12-17	16-23
10 mm	23-34	32-47
12 mm	41-59	56-82
14 mm	56-76	77-105
8T bolt/nut		
6 mm	6-9	8-12
8 mm	13-20	18-27
10 mm	27-40	37-55
12 mm	46-69	64-95
14 mm	75-101	104-140

* Unless otherwise specified.

Table 6 2.3L TURBO DIESEL ENGINE TORQUE SPECIFICATIONS

Fastener	ft.-lb.	N•m
Camshaft		
Bearing cap bolts	14-15	17-20
Sprocket bolt	47-54	64-73
Connecting rod cap nuts	33-34	45-47
Crankshaft pulley bolt	123-137	167-186
Cylinder head bolts		
Hot engine	84-90	113-122
Cold engine	76-83	103-112
Engine support bracket bolts	29-36	40-49
Exhaust manifold	11-14	15-19
Front case bolts	9-10	12-14
Fuel cutoff solenoid	29-33	39-45
Fuel cutoff solenoid connector nut	1	1.4
Flywheel bolts	94-101	128-137
Injection pump sprocket nut	40-50	54-68
Intake manifold	11-14	15-19
Glow plug	11-14	15-19
Main bearing cap bolts	55-61	74-83
Oil pan		
Attaching bolts	4.5-5.5	6-7
Drain plug	44-57	59-78
Oil relief valve plug	22-23	30-45
Rocker arm		
Adjusting nuts	9-13	12-17
Cover bolts	4-5	5-6
Shaft bolts	25-28	34-39
Silent shaft		
Chamber cover bolts	3-4	4-5
Sprocket bolt	25-28	34-39
Timing belt tensioner nut	16-21	22-29
Water temperature gauge unit	22-28	30-39

CHAPTER FIVE

V6 ENGINE

A carburetted 2.8L (171 cid) V6 engine is optional on 1983-1985 models; a fuel injected 2.9L (178 cid) V6 is optional on 1986 models. Both engines are a lightweight cast iron design with 60° block inclination. The 2.8L has a 3.65 in. bore and 2.70 in. stroke; the 2.9L has a 3.66 in. bore and 2.83 in. stroke. The cylinders are numbered from front to rear: 1-2-3 on the passenger side bank and 4-5-6 on the driver's side bank.

Valve arrangement from front to rear is I-E-E-I-E-I on the left bank and I-E-I-E-E-I on the right bank. The cylinder firing order is 1-4-2-5-3-6. Hydraulic valve lifters and pushrods operate the rocker arms and valves. Lash adjustment is required at specified intervals (2.8L only) and during assembly when some component in the valve train has been replaced (2.8L and 2.9L).

The crankshaft is supported by 4 main bearings, with the No. 3 bearing taking the end thrust.

The 2.8L V6 uses a gear-driven camshaft; the 2.9L V6 camshaft is chain-driven. Both are supported by 4 bearings and located above the crankshaft between the 2 cylinder banks. The oil pump is located on the bottom rear of the block and is driven by the distributor through an intermediate shaft. Specifications (**Table 1**) and tightening torques (**Table 2**) are at the end of the chapter.

ENGINE IDENTIFICATION

An engine code information label is attached to the right rocker arm cover. This label contains the engine calibration number, build date, plant code and engine code. The label identifies each engine and tells if parts are unique to particular engines. This information should be used when ordering parts to assure that the correct parts are furnished.

The 2.8L engine code is S; the 2.9L engine code is T. The engine code is the 8th digit/letter of the vehicle identification number (VIN). The VIN is the official identification for title and vehicle registration. The VIN is stamped on a metal vehicle identification plate attached to the top left of the instrument panel (**Figure 1**).

ENGINE REMOVAL

WARNING

The engine is heavy, awkward to handle and has sharp edges. It may shift or drop suddenly during removal. To prevent serious injury, always observe the following precautions.

1. Never place any part of your body where a moving or falling engine may trap, cut or crush you.

2. If you must push the engine during removal, use a board or similar tool to keep your hands out of danger.

3. Be sure the hoist is designed to lift engines and has enough load capacity for your engine.

4. Be sure the hoist is securely attatched to safe lifting points on the engine.

5. The engine should not be difficult to lift with a proper hoist. If it is, stop lifting, lower the engine back onto its mounts and make sure the engine has been completely separated from the vehicle.

1. Disconnect the underhood light and remove the hood.
2. Disconnect the negative battery cable, then the positive battery cable.
3. Drain the cooling system. See Chapter Seven.

4A. 2.8L—Remove the air cleaner and intake duct assembly. See Chapter Six.

4B. 2.9L—Unclamp and remove the air cleaner intake hose. See Chapter Six.

5. Disconnect the upper and lower radiator hoses at the radiator.
6. On automatic transmission models, disconnect the oil cooler inlet and outlet lines at the bottom of the radiator. Plug all lines and fittings to prevent leakage and contamination.
7. Remove the cooling fan shroud and position it over the fan. Remove the radiator and fan shroud. See Chapter Seven.
8. Disconnect the alternator ground lead at the engine block. Remove the alternator and mounting bracket.

WARNING

Do not disconnect air conditioning hoses or lines unless the system has been professionally discharged. The air conditioning system contains refrigerant under pressure which can cause frostbite if it touches skin and blindness if it touches the eyes.

9. On air conditioned models, remove the compressor from its mounting bracket without disconnecting any refrigerant lines and place it out of the way.
10. If equipped with power steering, remove the power steering pump from its mounting bracket without disconnecting any hydraulic lines and place it to one side out of the way.
11. Disconnect the heater hoses at the water pump and engine block.
12. Disconnect all ground wires at the engine block or cylinder head.

13A. 2.8L—Disconnect the fuel inlet line at the fuel pump. Plug the fuel line to prevent leakage.

13B. 2.9L—Disconnect the fuel inlet line at the fuel rail. See *Quick-disconnect Fittings*, Chapter Six. Plug the fuel line to prevent leakage.

14A. 2.8L—Disconnect the throttle cable linkage at the carburetor and intake manifold (A and B, **Figure 2**). On automatic transmission models, disconnect the transmission kickdown rod at the carburetor (C, **Figure 2**).

14B. 2.9L—Disconnect the throttle cable shield and linkage at the throttle body and intake manifold.

15. Disconnect all electrical leads at the temperature sending units (**Figure 3**) and oil pressure sender.
16. Disconnect the ignition coil (**Figure 4**).
17. Disconnect the brake booster vacuum line at the intake manifold.
18. Disconnect and tag all electrical connectors for reinstallation reference.
19. Securely block both rear wheels so the truck will not roll in either direction. Raise the vehicle with a jack and place it on jackstands.

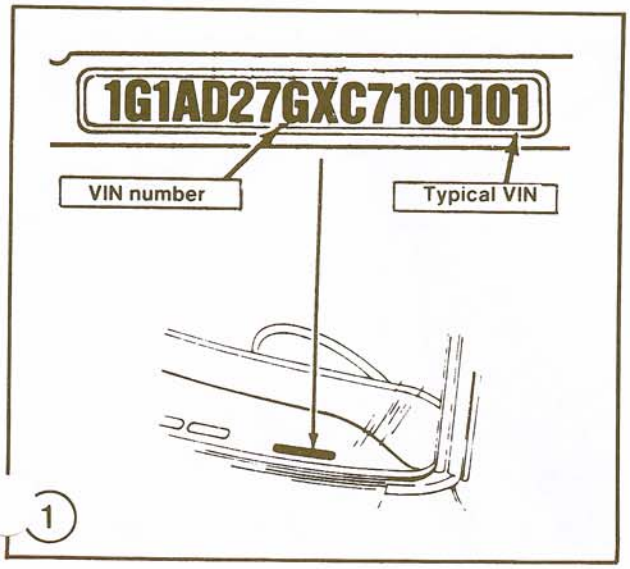

1

20. Drain the engine oil from the crankcase. See Chapter Three.
21. Remove the starter motor. See Chapter Eight.
22. Disconnect the muffler inlet pipe at the exhaust manifold.
23. Remove the front engine support-to-crossmember nuts and bolts.
24. On automatic transmission models:
    a. Remove the converter inspection cover.
    b. Detatch the drive plate from the converter.
    c. Remove the kickdown rod.
    d. Remove the conveter housing-to-block bolts.
    e. Remove the adapter plate-to-converter housing bolt.
25. Remove the clutch slave cylinder on manual transmission models.
26. Remove the jackstands and carefully lower the vehicle to the ground.
27. Disconnect any other accessories connected to the engine that will interfere with removal.
28. Attach a lifting sling to the engine lifting brackets located at the exhaust manifolds. Connect the sling to an engine hoist.
29. Support the front of the transmission with a jack to prevent damage to the transmission and to ease removal of the engine.
30. Remove the flywheel housing-to-engine bolts or converter housing-to-engine bolts.

NOTE

At this point, there should be no hoses, wires or linkage connecting the engine to the transmission or body. Recheck this to make sure nothing will hamper engine removal and that all accessories, hoses, tubes and wires are positioned out of the way.

31. Raise the engine slightly, then carefully disengage it from the transmission. Remove the engine from the engine compartment with the hoist, tilting it as necessary to prevent possible damage to the rear cover plate. Once the engine is clear of the vehicle, lower it to a suitable support or an engine stand. Fasten the engine in the support or stand, then disconnect the hoist and lifting sling. Inspect the rubber motor mounts and insulators for wear or damage. If these conditions exist, replace the mounts or insulators before reinstalling the engine.

ENGINE INSTALLATION

Engine installation is the reverse of removal, plus the following:

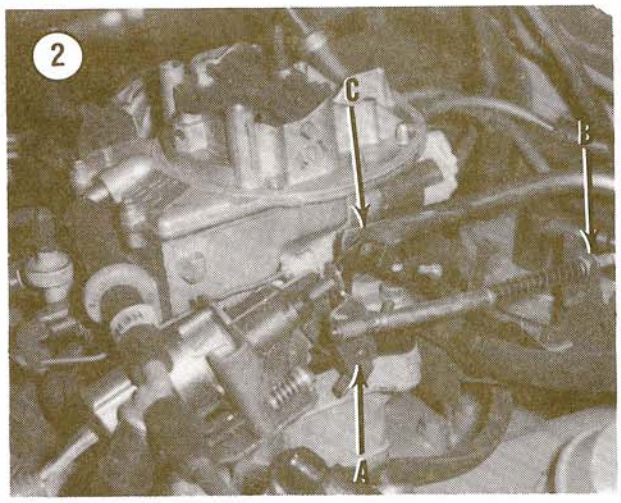

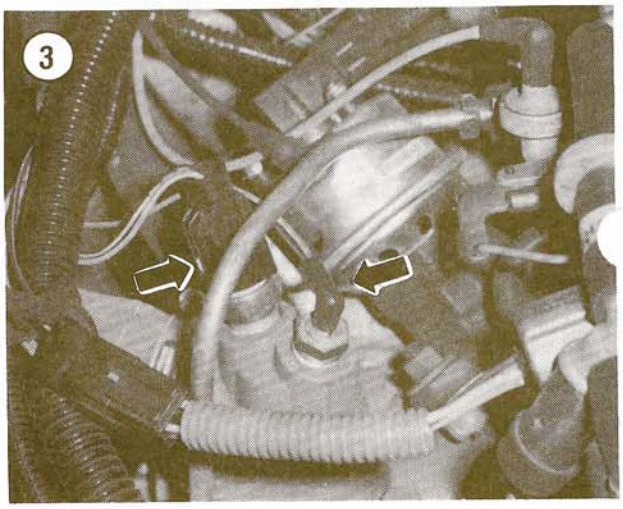

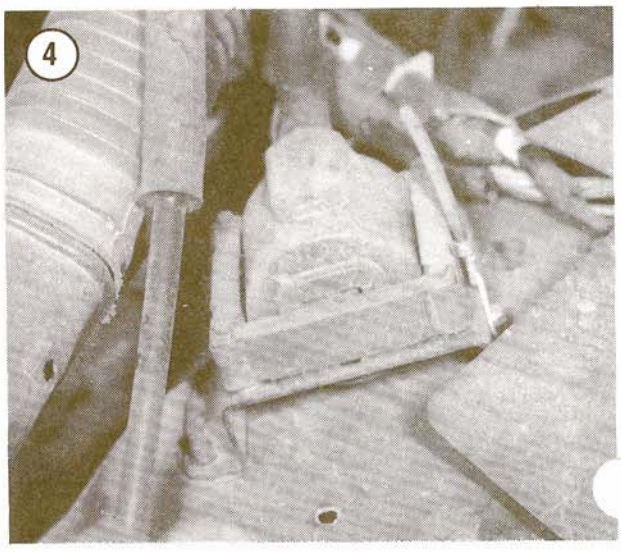

1. Lower the engine into the engine compartment carefully.
   a. On automatic transmission trucks, start the converter pilot into the crankshaft.
   b. On manual transmission models, engage the transmission input gear splines with the clutch disc splines.
2. Leave the hoist attached and holding the engine weight until the upper flywheel housing bolts or converter housing bolts are installed.
3. Tighten all fasteners to specifications (**Table 2**).
4. Fill the engine with an oil recommended in Chapter Three.
5. Fill the cooling system. See Chapter Seven.
6. Adjust the drive belts. See Chapter Three.

DISASSEMBLY CHECKLISTS

To use the checklists, remove and inspect each part in the order mentioned. To reassemble, go through the checklists backwards, installing the parts in order. Each major part is covered under its own heading in this chapter, unless otherwise noted.

Decarbonizing or Valve Service

1. Remove the valve cover.
2. Remove the intake and exhaust manifolds.
3. Remove the rocker arms.
4. Remove the cylinder head.
5. Have valves removed and inspected. Inspect valve guides and seats, repairing or replacing as necessary.
6. Assemble by reversing Steps 1-5.

Valve and Ring Service

1. Perform Steps 1-5 of *Decarbonizing or Valve Service.*
2. Remove the oil pan.
3. Remove the oil pump.
4. Remove the pistons with the connecting rods.
5. Remove the piston rings. It is not necessary to separate the pistons from the connecting rods unless a piston, connecting rod or piston pin needs repair or replacement.
6. Assemble by reversing Steps 1-5.

General Overhaul

1. Remove the engine. If available, mount the engine on an engine stand. These can be rented from equipment rental dealers. The stand is not absolutely necessary, but it will make the job much easier.
2. Remove the clutch (Chapter Nine) from manual transmission vehicles.
3. Remove the flywheel or drive plate.
4. Remove the motor mount brackets, oil filter and oil pressure sending unit.
5. Remove the coolant temperature sending unit from the engine.
6. Check the engine for signs of coolant or oil leaks, then clean the outside of the engine with solvent.
7. Remove the distributor. See Chapter Eight.
8. Remove all hoses and tubes connected to the engine.
9. Remove the fuel pump (2.8L only). See Chapter Six.
10. Remove the intake and exhaust manifolds.
11. Remove the thermostat housing and water pump. See Chapter Seven.
12. Remove the rocker arm covers and rocker arm assemblies.
13. Remove the crankshaft pulley and front cover. Remove the timing gears.
14. Remove the camshaft.
15. Remove the cylinder heads.
16. Remove the oil pan and oil pump.
17. Remove the pistons and connecting rods.
18. Remove the crankshaft and main bearings.
19. Inspect the cylinder block.
20. Assemble by reversing Steps 1-18.

FRONT ENGINE MOUNTS

Removal/Installation

Refer to **Figure 5** for this procedure.

1. Remove the fan shroud screws and move the shroud toward the engine over the fan.
2. Securely block both rear wheels so the truck will not roll in either direction. Raise the vehicle with a jack and place it on jackstands.
3. Position a floor jack with wooden block under the oil pan.
4. Remove the nuts and washers holding the insulators to the No. 2 crossmember.
5. Raise the engine with the jack until the insulator stud clears the crossmember.
6. Remove the bolt holding the fuel pump shield to the left-hand engine bracket, if so equipped.
7. Unbolt and remove the insulator assembly from the cylinder block. Remove the engine mount assembly.

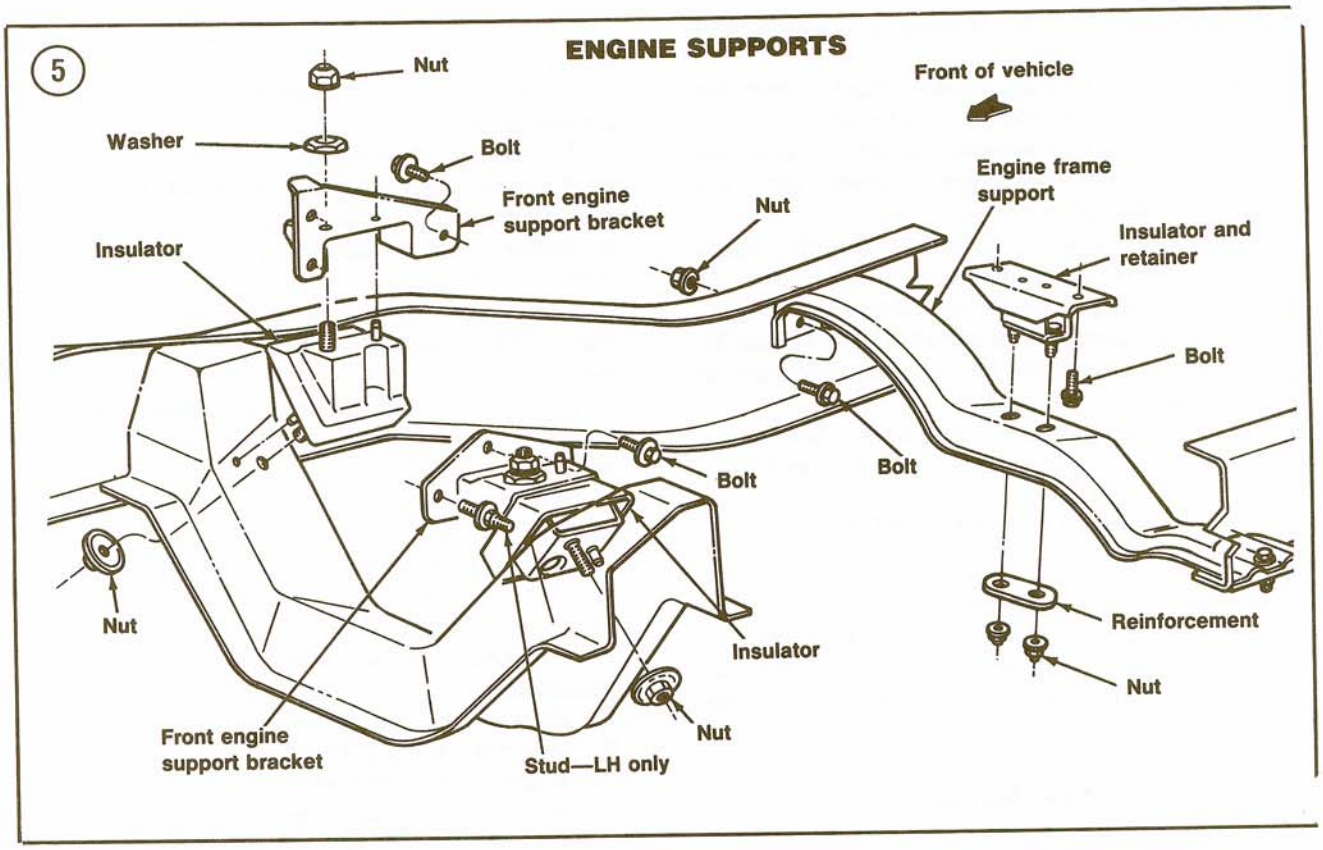

8. Installation is the reverse of removal. Tighten support bracket-to-engine bolts to 45-60 ft.-lb. (62-81 N•m). Tighten insulator-to-crossmember nuts to 71-94 ft.-lb. (91-127 N•m). Tighten insulator-to-engine bracket nut to 65-85 ft.-lb. (88-115 N•m).

REAR ENGINE SUPPORT

Refer to **Figure 5** for this procedure.

1. Raise the vehicle with a jack and place it on jackstands.
2. Remove the 2 nuts holding the rear insulator to the engine support.
3. Position a floor jack with wooden block under the transmission. Raise the transmission enough to unload the insulator, then continue raising it until the support bracket clears the insulator.
4. Remove the bolts holding the crossmember to the frame side rails. Remove the crossmember.
5. Remove the exhaust hanger from the rear engine mount, if so equipped.
6. Remove the 2 bolts holding the insulator to the transmission. Remove the insulator and retainer assembly.
7. Installation is the reverse of removal. Tighten crossmember fasteners to 110-140 ft.-lb. (149-189 N•m). Tighten insulator-to-transmission bolts to 60-80 ft.-lb. (81-108 N•m). Tighten insulator-to-crossmember nuts to 65-85 ft.-lb. (88-115 N•m).

ROCKER ARM COVERS

Removal/Installation

1. 2.8L—Remove the air cleaner assembly. See Chapter Six.
2. Disconnect the spark plug cables at the plugs and remove the plug cable retainers from their bracket on the cover.
3. On the right cover:
   a. Disconnect the PCV valve.
   b. 2.8L—Remove the carburetor choke air deflector shield.
   c. Remove the automatic transmission dipstick tube bracket, if so equipped.
   d. 2.8L—Move the Thermactor air diverter ai air bypass valves away from the cover.

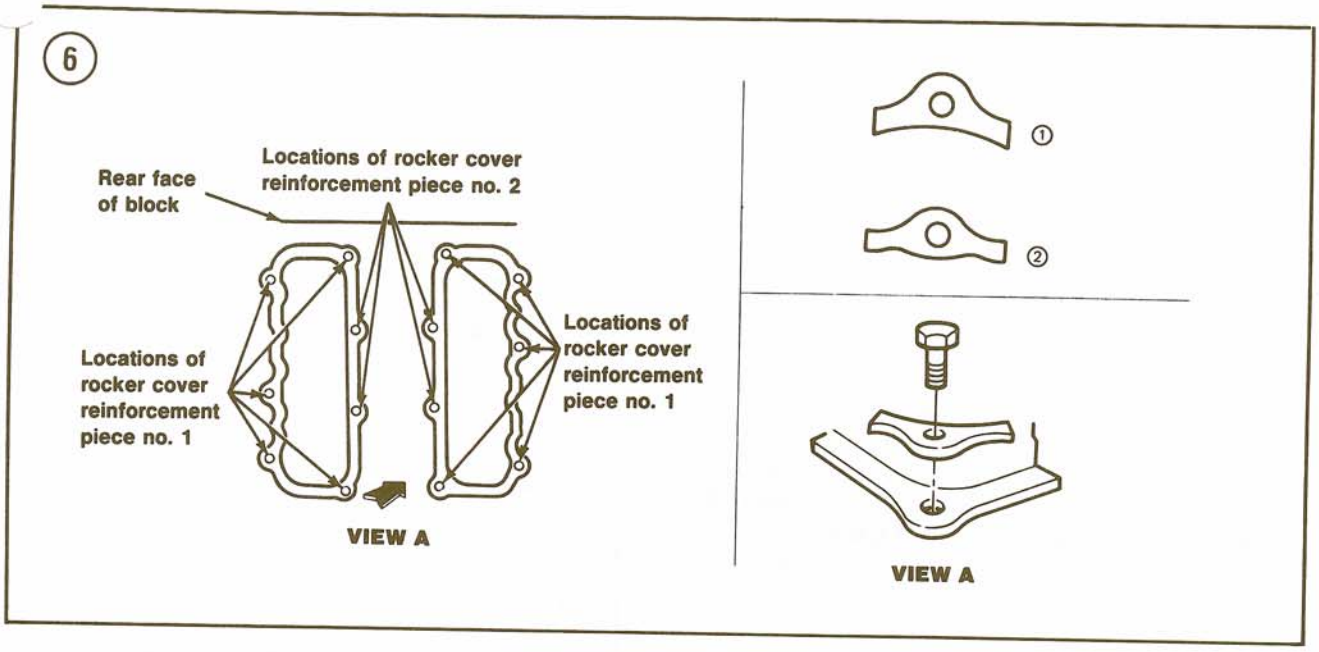

4. On the left cover:
   a. Disconnect automatic transmission kickdown rod (C, **Figure 2**) at the carburetor or throttle body, if so equipped.
   b. Remove the oil filler cap.
   c. Disconnect the power brake booster vacuum hose, if so equipped.
   d. Disconnect the canister purge solenoid vacuum line, if so equipped.
5. Remove the cover attching screws and load distribution washers. Note washer location for correct reinstallation.

NOTE

If the cover refuses to come free in Step 6, bump the end with a rubber mallet. If this does not break the gasket seal, carefully pry the cover loose with a screwdriver. Use caution to prevent distorting the cover sealing flange.

6. Tap the rocker arm cover with a plastic mallet to break the gasket seal. Remove the rocker arm cover and gasket. Discard the gasket.
7. Clean any gasket residue from the cylinder head and rocker arm cover with degreaser and a putty knife.

NOTE

An oil leak will develop if a new gasket is not used in Step 8 or if the load distribution washers are not properly installed.

Install rocker arm cover with a new gasket. Install attaching screws with load distribution washers. See **Figure 6**. Tighten attaching screws to specifications (**Table 2**).
9. Reverse Steps 1-4 to complete installation. Run the engine at fast idle and check for oil leaks.

INTAKE AND EXHAUST MANIFOLDS (2.8L ENGINE)

Intake Manifold Removal/Installation

1. Disconnect the negative battery cable.
2. Drain the cooling system. See Chapter Seven.
3. Remove the air cleaner assembly. See Chapter Six.
4. Disconnect the carburetor throttle linkage (A and B, **Figure 2**). If equipped with an automatic transmission, disconnect the transmission kickdown rod (C, **Figure 2**).
5. Disconnect and remove the water outlet-to-radiator hose.
6. Disconnect the thermostat housing rear cover bypass hose at the intake manifold.
7. Remove the distributor. See Chapter Eight.
8. Remove the rocker arm covers as described in this chapter.
9. Disconnect the fuel line at the fuel filter. Plug the line to prevent leakage.
10. Label and disconnect all electrical and vacuum lines at the carburetor and intake manifold.
11. Remove the bolts and stud nuts holding the intake manifold in place.

12. Pry or tap the intake manifold loose and remove it from the engine.
13. Remove and discard the intake manifold gaskets.
14. If a new manifold is to be installed, transfer all fittings from the old one.
15. Clean all gasket and sealer residue from the block, cylinder heads and intake manifold with degreaser and a putty knife.
16. Apply sealing compound to the cylinder head and block joining surfaces. Install new manifold gaskets. The tab on the right cylinder bank head gasket must fit into the manifold gasket cutout.
17. Apply sealing compound to the intake manifold attaching bosses. Install the manifold and tighten the fasteners to specifications (**Table 2**) following the sequence shown in **Figure 7**.
18. Reverse Steps 1-10 to complete the installation.

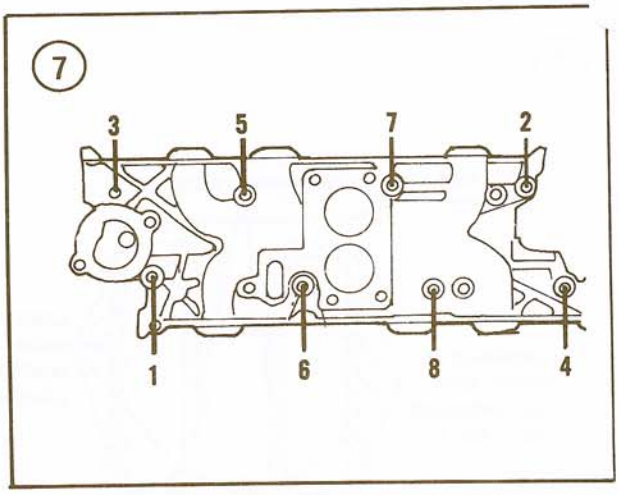

Exhaust Manifold Removal/Installation

Refer to **Figure 8** or **Figure 9** as required for this procedure.

1. Disconnect the negative battery cable.
2. Remove the air cleaner assembly. See Chapter Six.
3. On the right side:
   a. Disconnect the muffler inlet pipe nuts.
   b. Disconnect the Thermactor air diverter, air bypass and check valves as required to provide access for manifold removal.
   c. Disconnect the carburetor choke heat tubes, if so equipped.
4. On the left side:
   a. Remove the manifold shroud nuts.
   b. Disconnect the oxygen sensor lead.
5. Remove the attaching nuts, bolts and washers. Remove the manifold(s).
6. Position manifold on cylinder head and install the fasteners. Tighten fasteners to specifications (**Table 2**) working from the center to the ends.
7. Reverse Steps 1-4 to complete installation. Use a new muffler inlet pipe gasket.

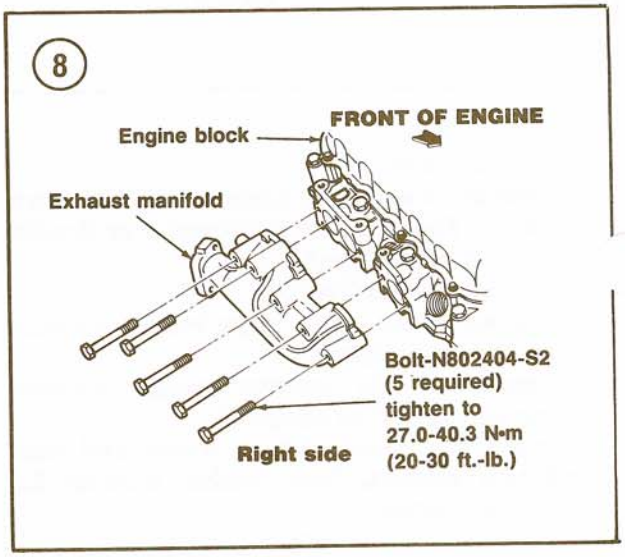

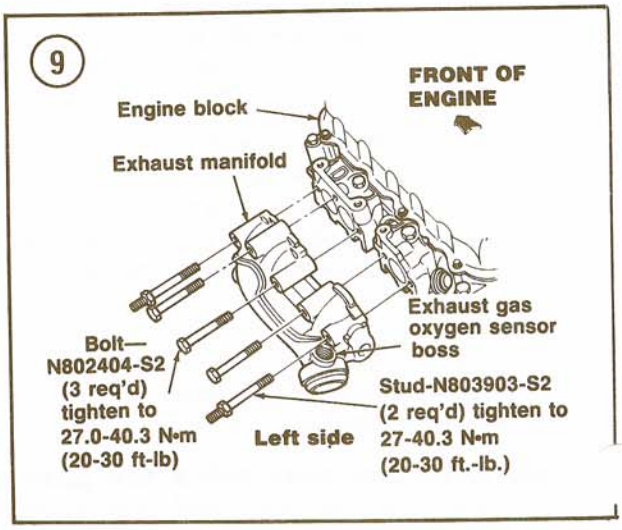

INTAKE AND EXHAUST MANIFOLDS (2.9L ENGINE)

A 2-piece (upper and lower) air intake manifold is used with the EFI system. The upper manifold (**Figure 10**) provides mounting for the throttle body assembly, bypass valve, air charge temperature

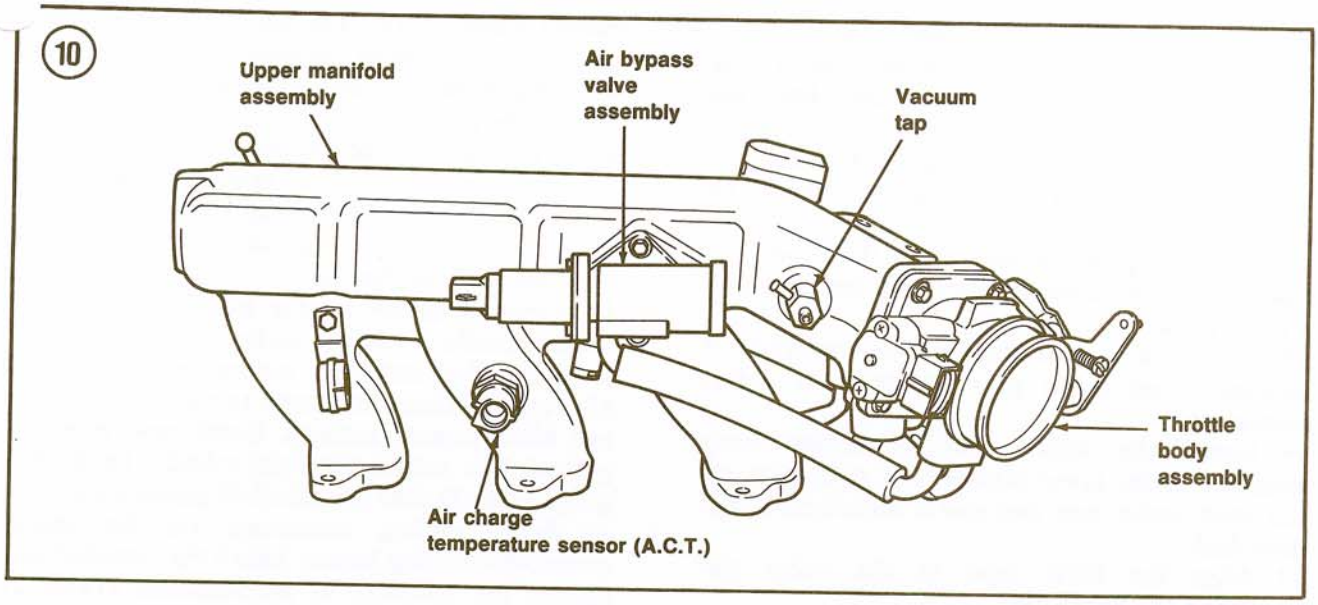

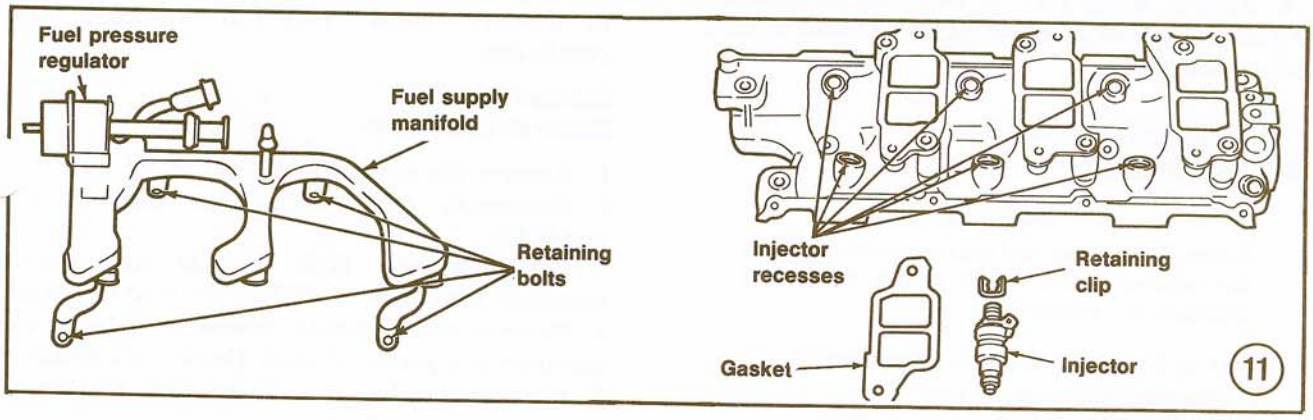

sensor, throttle cable bracket, EGR valve and vacuum taps. The lower manifold (**Figure 11**) includes the fuel supply rail, injectors, coolant temperature sensor and thermostat housing.

Upper Air Intake Manifold Removal/Installation

Refer to **Figure 10** for this procedure.

1. Disconnect the negative battery cable.
2. Label and unplug the electrical connectors attached to the manifold components.
3. Disconnect the air cleaner inlet tube at the throttle body.
4. Remove the protective shield over the throttle linkage. Disconnect the throttle cable at the ball stud.

Label and disconnect all vacuum lines attached to the manifold components.

6. Disconnect the PCV closure tube underneath the throttle body, then disconnect the PCV vacuum line under the manifold.
7. Disconnect the canister purge line at the fitting near the power steering pump.
8. Loosen the EGR tube flange nut and disconnect the tube from the EGR valve.

WARNING

Do not disconnect air conditioning or lines unless the system has been professionally discharged. The air conditioning system contains refrigerant under pressure which can cause frostbite if it touches skin and blindness if it touches the eyes.

9. Loosen the bolt holding the air conditioning line at the upper rear of the manifold. Detach the retainer from the manifold.

10. Loosen and remove the 6 manifold bolts.
11. Pry or tap the manifold loose. Remove the manifold and throttle body as a unit from the engine.
12. Remove and discard the manifold gasket.
13. If a new manifold is to be installed, transfer all fittings from the old one.
14. Clean all gasket residue from the lower and upper manifold mating surfaces with degreaser and a putty knife.
15. Install a new gasket on the lower manifold. If necessary, use guide pins to assist in gasket alignment.
16. Install the upper manifold/throttle body assembly to the lower manifold. If guide pins are not used, make sure that gasket alignment is not disturbed.
17. Align the EGR tube in the valve and hand-start the flange nut.
18. Reverse Steps 1-10 to complete installation. Tighten fasteners to specifications (**Table 2**) in a criss-cross pattern.

Lower Air Intake Manifold
Removal/Installation

WARNING

Before opening any fuel system connections on a fuel injected engine, relieve system pressure as described in Chapter Six.

Refer to **Figure 11** for this procedure.

1. Thoroughly clean the engine.
2. Disconnect the negative battery cable.
3. Drain the cooling system. Disconnect radiator hose at the thermostat housing. See Chapter Seven.
4. Remove the fuel cap. Relieve system pressure. See Chapter Six.
5. Disconnect the spark plug wires at the plugs. Remove the distributor cap and plug wires as an assembly.
6. Disconnect the distributor wiring harness and remove the distributor (Chapter Eight).
7. Remove the rocker arm covers as described in this chapter.
8. Remove the upper air intake manifold as described in this chapter.
9. Disconnect the crossover fuel hose spring lock coupling at the fuel supply rail. Disconnect the fuel supply and return line connections at the fuel rail. See *Quick-disconnect Fittings*, Chapter Six.
10. Unbolt and remove the lower manifold bolts and nuts. Note length and position of bolts for correct reinstallation. Tap manifold lightly with plastic mallet to break the gasket seal. Remove the manifold with fuel rail attached. Remove and discard the gasket.
11. If fuel rail is to be removed:
    a. Remove the 4 fuel rail retaining bolts.
    b. Carefully separate the fuel rail from the lower intake manifold. The fuel injectors will come out with the fuel rail.
12. Clean all gasket residue from the upper and lower manifold mating surfaces, and from the lower manifold and block mating surfaces.
13. Apply sealing compound to the cylinder head and block joining surfaces. Install new manifold gaskets. The tab on the right cylinder bank head gasket must fit into the manifold gasket cutout.
14. Apply sealing compound on the intake manifold attaching bosses. Install the manifold and tighten the fasteners to specifications (**Table 2**) working from the center outwards.
15. Reverse Steps 1-11 to complete the installation.

Exhaust Manifold
Removal/Installation

1. Remove the steering joint heat shield nuts.
2. Disconnect the muffler inlet pipe at the manifold.
3. Disconnect the EGR line at the exhaust manifold and loosen the EGR tube, if so equipped.
4. Remove the manifold fasteners. Remove the manifold and gasket, if used. Discard the gasket.
5. If a new manifold is to be installed, transfer all fittings from the old one.
6. Installation is the reverse of removal. Install the attaching fasteners and tighten all fasteners to specifications (**Table 2**) working from the center to the ends.

MANIFOLD INSPECTION

Intake and Exhaust Manifolds

1. Check the intake and exhaust manifolds for cracks or distortion. Replace as necessary.
2. Check the sealing surfaces for nicks or burrs. Small burrs may be removed with an oilstone.
3. Place a straightedge across the manifold sealing surfaces and measure any gap between the straightedge and sealing surface with a flat feeler gauge. Measure from end to end and diagonally. If the sealing surface is not flat within 0.006 in. (0.15 mm) per foot of manifold length, replace manifold.

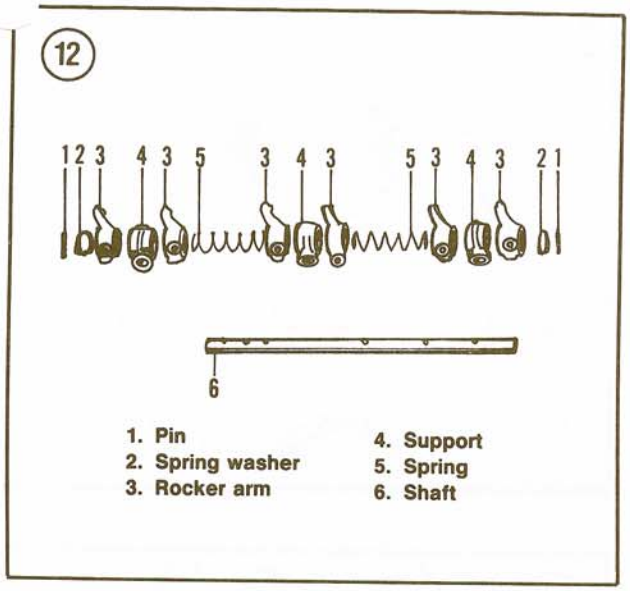

ROCKER ARM ASSEMBLIES

Removal/Installation

1. Remove the rocker arm cover(s) as described in this chapter.
2. Loosen each rocker arm retaining bolt 2 turns at a time, working from the center outward, until all bolts are free of the cylinder head. Lift the rocker assembly and oil baffle (mounted below the rocker assembly) off the cylinder head.
3. Remove the pushrods from their bores. Use a holder to keep the pushrods in order. They must be reinstalled in the same bores from which they were removed.
4. Installation is the reverse of removal. Loosen valve adjusting screws a few turns and lubricate entire assembly with engine oil. Apply Lubriplate or equivalent to both ends of the pushrods, to the valve stem tips and the rocker arm contact points. Tighten rocker arm shaft retaining bolts to specifications (**Table 2**), then check the valve clearances. See Chapter Three.

Disassembly

Refer to **Figure 12** for this procedure.
1. Remove the spring washer and pin from one end of the rocker arm shaft.
2. Slide the rocker arms, rocker arm shaft supports and springs off the shaft. Mark the individual parts in the sequence in which they are removed so that the parts can be reassembled in their original positions.
3. Drill a hole in the plug in one end of the rocker arm shaft. Insert a long steel rod through the drilled hole and knock the plug out of the other end of the shaft. Remove the drilled plug from the shaft by inserting the steel rod from the opposite end of the shaft and driving it out.

Inspection

1. Clean all parts in solvent and blow dry with compressed air.
2. Make sure all oil passages in the rocker arms, supports and shaft are clean.
3. Check the pushrods for excessive wear or damage. Roll each pushrod on a pane of glass and listen for a clicking noise which indicates that the pushrod is bent. Replace pushrods as required.
4. Check the rocker arm shafts and rocker arms for signs of seizure or excessive wear. Clearance between rocker arms and shaft should be 0.001-0.0035 in. Maximum permissible clearance is 0.006 in. as measured with a flat feeler gauge.
5. Check valve stem contact surfaces on each rocker arm for wear. Replace worn rocker arms. Do not try to smooth rocker arm bores or contact surfaces.

Assembly

Refer to **Figure 12** for this procedure.
1. Tap new plugs into the ends of the rocker arm shaft.
2. Lubricate all parts with clean engine oil.
3. Position the rocker arm shaft with the notch on the front face of the shaft pointing downward.
4. Install a spring washer and pin in one end of the rocker arm shaft, then install the rocker arms, supports and springs in their original locations.
5. Install the pin and spring washer in the opposite end of the rocker shaft.
6. Lubricate each rocker arm pad with Lubriplate.

CRANKSHAFT PULLEY

Removal/Installation

1. Remove the alternator drive belt.
2. Remove the pulley attaching bolts.
3. Remove the pulley with a suitable puller.
4. Installation is the reverse of removal. Tighten pulley bolt to specifications (**Table 2**).

FRONT COVER, SEAL AND TIMING GEARS (2.8L V6)

Front Cover Removal/Installation

1. Remove the oil pan as described in this chapter.
2. Drain the cooling system. See Chapter Seven.

WARNING

Do not disconnect air conditioning hoses or lines unless the system has been professionally discharged. The air conditioning system contains refrigerant under pressure which can cause frostbite if it touches skin and blindness if it touches the eyes.

3. On air conditioned models, remove the compressor and mounting bracket without disconnecting any refrigerant lines. Move compressor out of the way.
4. If equipped with power steering, remove the power steering pump and mounting bracket without disconnecting any hydraulic lines. Move the pump and bracket to one side out of the way.
5. Remove the alternator and Thermactor pump.
6. Remove the fan from the fan clutch assembly.
7. Remove the water pump. See Chapter Seven.
8. Remove the crankshaft pulley as described in this chapter.
9. Remove the front cover bolts. Tap cover lightly with a plastic mallet to break the gasket seal. Remove the cover.
10. Remove the 2 front cover plate screws (**Figure 13**). Remove the front cover plate and gasket.
11. Remove the 2 guide sleeves from the block (**Figure 14**). Remove and discard the O-ring on each sleeve.
12. Clean the block, cover plate and cover mating surfaces of all gasket and sealant residue.
13. Apply sealing compound to the mating surfaces on the block and rear of the cover plate.
14. Install guide sleeves with new O-rings. Chamfered end of sleeve must face front cover.
15. Position a new gasket and the cover plate on the block. Temporarily install 4 front cover screws to hold the gasket and plate in place.
16. Install and tighten cover plate screws, then remove the 4 cover screws installed in Step 15.
17. Install sealing compound to the front cover gasket surface and position a new gasket on the front cover.

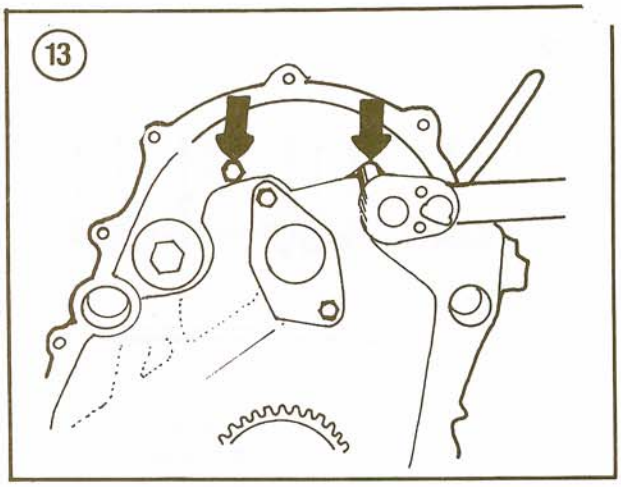

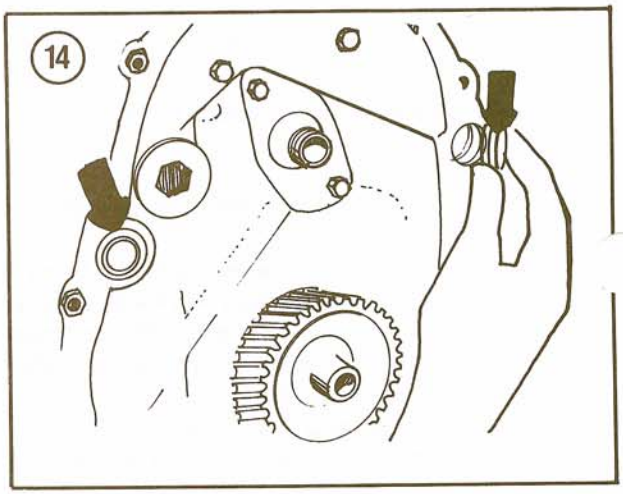

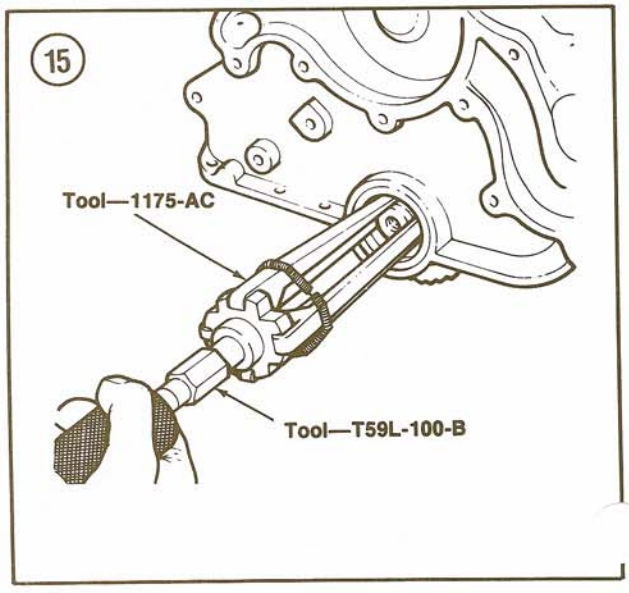

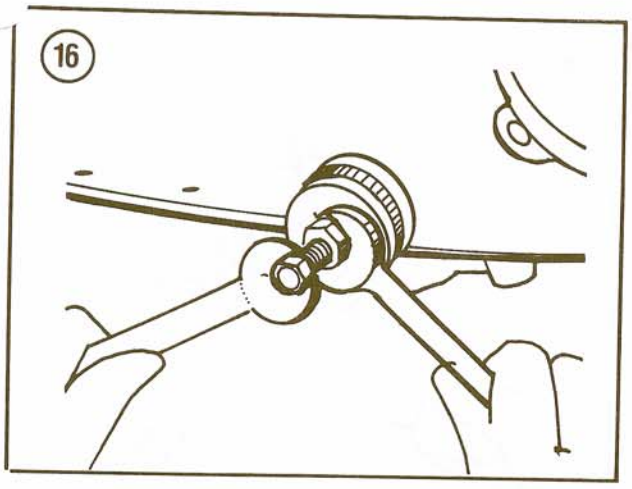

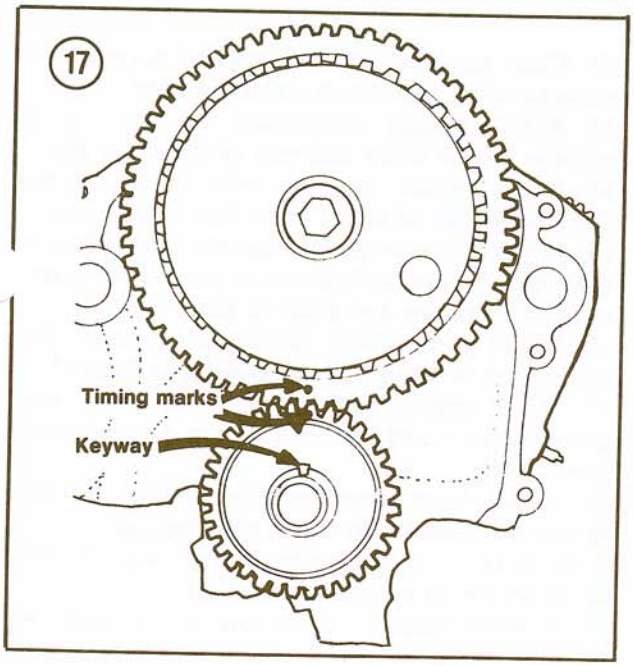

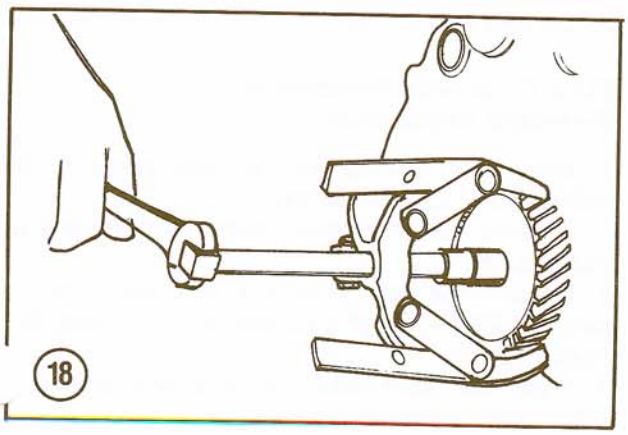

18. Install front cover to block. Start all cover screws and then insert cover aligning tool part No. T74P-6019-A or equivalent in oil seal. Tighten cover screws to specifications (**Table 2**).
19. Reverse Steps 1-11 to complete installation. Fill and bleed the cooling system. See Chapter Seven. Start the engine and run at fast idle to check for coolant and oil leaks.

Front Cover Seal Replacement (In-vehicle Replacement)

1. Drain the cooling system and remove the radiator. See Chapter Seven.
2. Remove the crankshaft pulley as described in this chapter.
3. Remove the front cover seal with seal remover part No. 1175-AC and a suitable slide hammer. See **Figure 15**.
4. Wipe the outer diameter of a new seal with Lubriplate or equivalent.
5. Position new seal in cover recess and install with seal installer part No. T74P-6700-A. See **Figure 16**.

Front Cover Seal Replacement (Front Cover Removed)

1. Support the front cover to prevent cover damage.
2. Drive old seal out with front cover aligning tool part No. T74P-6019-A or equivalent.
3. Wipe the outer diameter of a new seal with Lubriplate or equivalent.
4. Position new seal in cover recess and install with aligning tool part No. T74P-6019-A or equivalent.

Timing Gear Removal

1. Remove the front cover as described in this chapter.
2. Check the camshaft end play as described in this chapter. Replace the thrust plate and spacer rings, if necessary, to achieve the proper end play. See **Table 1**.
3. Temporarily install the crankshaft pulley bolt and rotate the crankshaft until the timing gear marks are aligned. See **Figure 17**. Remove the pulley bolt.
4. Remove the camshaft sprocket retaining bolt and washer, then slide the sprocket off the camshaft and remove the camshaft key.
5. Remove the crankshaft gear with a puller as shown in **Figure 18**. Remove the crankshaft key.

Timing Gear Installation

1. Install the camshaft key. Align the camshaft sprocket keyway with the camshaft key and slide the sprocket onto the camshaft until it seats tightly against the camshaft spacer.
2. Install the crankshaft key. Align the crankshaft sprocket keyway with the crankshaft key and position the sprocket on the crankshaft. The timing marks should align as shown in **Figure 17**.
3. Install a suitable gear or sprocket installer and draw the crankshaft sprocket into place (**Figure 19**).
4. Install the front cover as described in this chapter.

FRONT COVER, SEAL, SPROCKETS AND TIMING CHAIN (2.9L V6)

Front Cover Removal/Installation

1. Remove the oil pan as described in this chapter.
2. Drain the cooling system. See Chapter Seven.

WARNING

Do not disconnect air conditioning hoses or lines unless the system has been professionally discharged. The air conditioning system contains refrigerant under pressure which can cause frostbite if it touches skin and blindness if it touches the eyes.

3. On air conditioned models, remove the compressor and mounting bracket without disconnecting any refrigerant lines. Move compressor out of the way.
4. If equipped with power steering, remove the power steering pump and mounting bracket without disconnecting any hydraulic lines. Move the pump and bracket to one side out of the way.
5. Remove the alternator and Thermactor pump.
6. Remove the fan from the fan clutch assembly.
7. Remove the water pump. See Chapter Seven.
8. Remove the crankshaft pulley as described in this chapter.
9. Remove the front cover bolts. Tap cover lightly with a plastic mallet to break the gasket seal. Remove the cover.
10. Remove the 2 front cover plate screws (**Figure 13**). Remove the front cover plate and gasket.
11. Remove the 2 guide sleeves from the block (**Figure 14**). Remove and discard the O-ring on each sleeve.

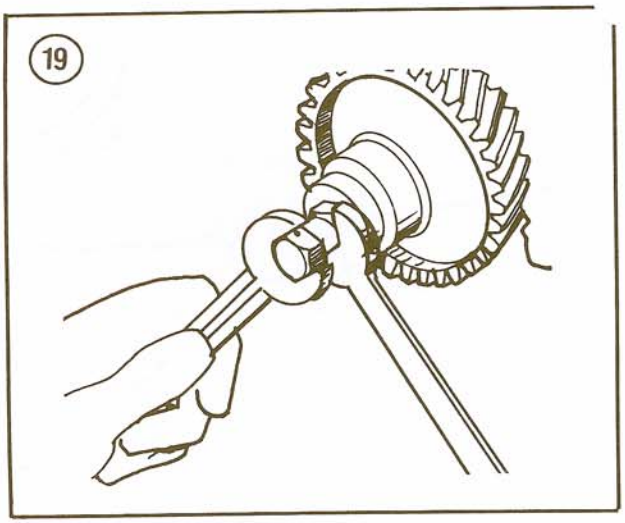

12. Clean the block, cover plate and cover mating surfaces of all gasket and sealant residue.
13. Apply sealing compound to the mating surfaces on the block and rear of the cover plate.
14. Install guide sleeves with new O-rings. Chamfered end of sleeve must face front cover.
15. Position a new gasket and the front plate on the block. Temporarily install 4 front cover screw to hold the gasket and plate in place.
16. Install and tighten cover plate screws, then remove the 4 cover screws installed in Step 15.
17. Install sealing compound to the front cover gasket surface and position a new gasket on the front cover.
18. Install front cover to block. Start all cover screws and then insert cover aligning tool part No. T74P-6019-A or equivalent in oil seal. Tighten cover screws to specifications (**Table 2**).
19. Reverse Steps 1-11 to complete installation. Fill and bleed the cooling system. See Chapter Seven. Start the engine and run at fast idle to check for coolant and oil leaks.

Front Cover Seal Replacement (In-vehicle Replacement)

1. Drain the cooling system and remove the radiator. See Chapter Seven.
2. Remove the crankshaft pulley as described in this chapter.
3. Remove the front cover seal with seal remover part No. 1175-AC and a suitable slide hammer. See **Figure 15**.
4. Wipe the outer diameter of a new seal wi. Lubriplate or equivalent.

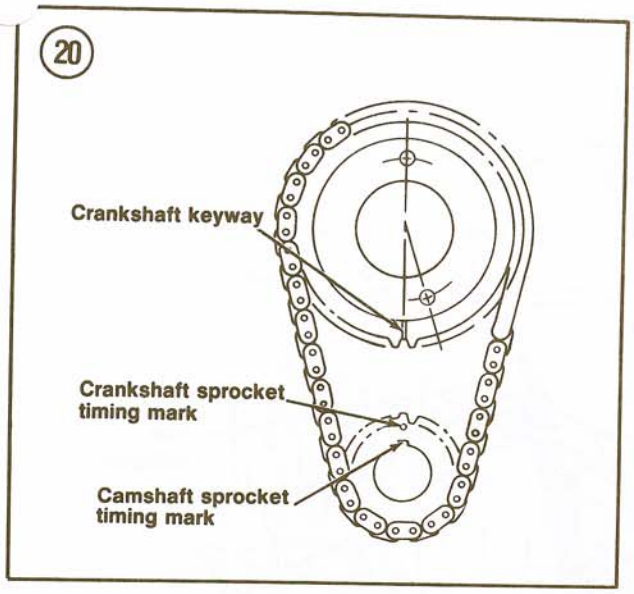

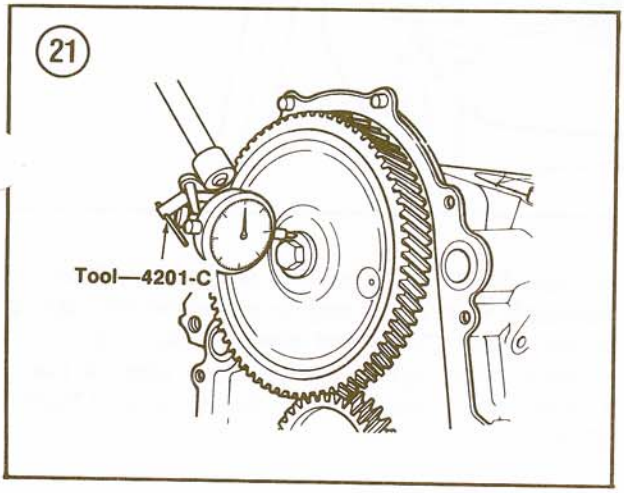

5. Position new seal in cover recess and install with seal installer part No. T74P-6700-A. See **Figure 16**.

Front Cover Seal Replacement (Front Cover Removed)

1. Support the front cover to prevent cover damage.
2. Drive old seal out with front cover aligning tool part No. T74P-6019-A or equivalent.
3. Wipe the outer diameter of a new seal with Lubriplate or equivalent.
4. Position new seal in cover recess and install with aligning tool part No. T74P-6019-A or equivalent.

Timing Sprockets and Chain

1. Drain the cooling system. See Chapter Seven.
2. Remove the oil pan as described in this chapter.
3. Remove the water pump. See Chapter Seven.
4. Remove the front cover as described in this chapter.
5. Remove the camshaft sprocket attaching bolts and washer. Slide the sprocket off the camshaft and remove with the timing chain.
6. Remove the crankshaft sprocket (if necessary) with puller part No. T71P-7137-H or equivalent.
7. Lubricate the timing chain with clean SAE 30W engine oil.
8. If crankshaft pulley was removed:
   a. Rotate the crankshaft as required to place the sprocket keyway in the 12 o'clock position.
   b. Align sprocket keyway with crankshaft key.
   c. Slide gear onto crankshaft and use a suitable sprocket installer to draw the gear up against the spacer.
9. Assemble the timing chain to the camshaft and crankshaft sprockets with the sprocket timing marks aligned as shown in **Figure 20** (typical).
10. Install the timing chain and camshaft pulley assembly. Recheck to make sure timing marks are properly aligned.
11. Install the camshaft sprocket bolts and tighten to specifications (**Table 2**).
12. Reverse Steps 1-4 to complete installation.

CAMSHAFT

End Play

Prying against the aluminum-nylon composite camshaft gear with the valve train load on the camshaft can result in damage to the gear. If the valve train is installed when end play is checked, loosen the rocker shaft assembly bolts enough to free the camshaft, then readjust the valve clearance as described in Chapter Three after performing this procedure.

1. Push the camshaft as far to the rear of the engine as it will go.
2. Install a dial indicator on the front of the engine with its plunger touching the camshaft sprocket retaining bolt or washer. See **Figure 21** (2.8L) or **Figure 22** (2.9L).
3. Set the indicator gauge at zero and pry the camshaft as far forward as possible with a large screwdriver.
4. If the dial indicator reading is greater than 0.009 in., replace the camshaft thrust plate and spacer.

5

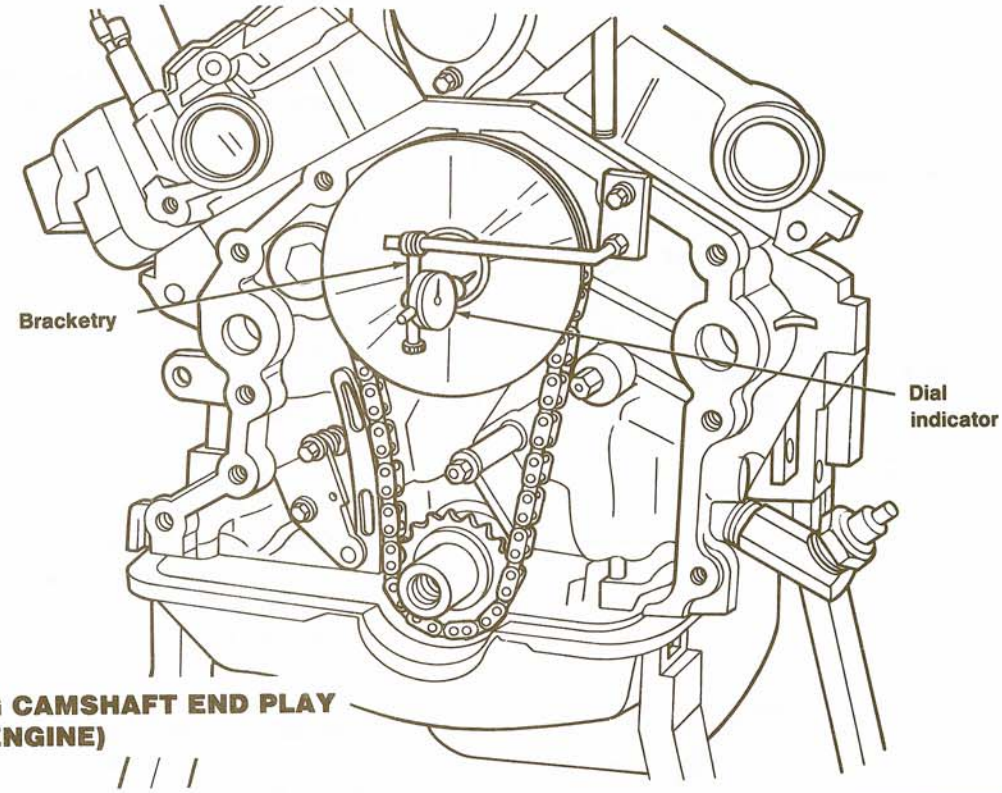

CHECKING CAMSHAFT END PLAY (2.9L V-6 ENGINE)

Removal/Installation

1. Remove the rocker arm covers, rocker arm assemblies, intake manifold and front cover as described in this chapter.
2. Check camshaft end play as described in this chapter.
3. Remove the camshaft sprocket as described in this chapter.

NOTE

If the tappets are stuck in their bores, use tool part No. T52T-6500-DJD or T52T-6500-D to rotate the tappet back and forth. This will break the varnish or gum seal that is holding the tappet in place and allow its removal.

4. Remove the valve tappets with a pencil-type magnet. Place them in a rack in order of removal for reinstallation in their original locations.
5. Remove the oil pump, fuel pump (if so equipped) and distributor.
6. Remove the camshaft thrust plate and spacer.
7. Carefully withdraw the camshaft from the front of the engine with a rotating motion to avoid damage to the bearings.
8. Installation is the reverse of removal. Coat the camshaft with heavy engine oil before reinstalling in the block. Check end play as described in this chapter before tightening the rocker arms in place. Check valve clearance as described in Chapter Three.

Inspection

1. Check the journals and lobes for signs of wear or scoring. Lobe pitting in the toe area is not sufficient reason for replacement, unless the lobe lift loss is excessive.
2. Check each valve tappet for signs of wear, pitting or scoring. Replace as required.

NOTE

If you do not have precision measuring equipment, have Step 3 done by a machine shop.

3. Measure the camshaft journal diameters with a micrometer (**Figure 23**) and compare t specifications (**Table 1**). Replace the camshaft one or more journals do not meet specifications.

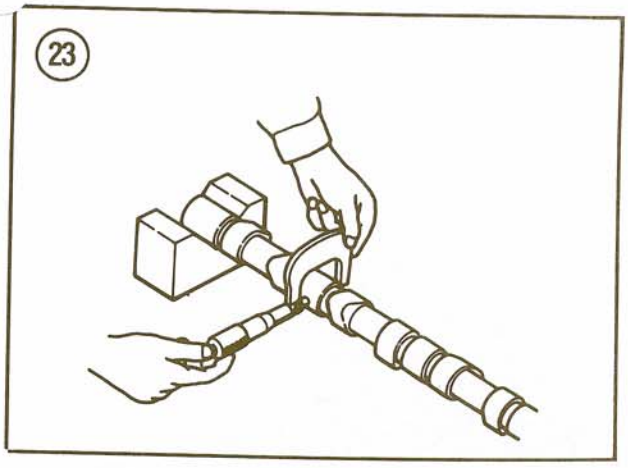

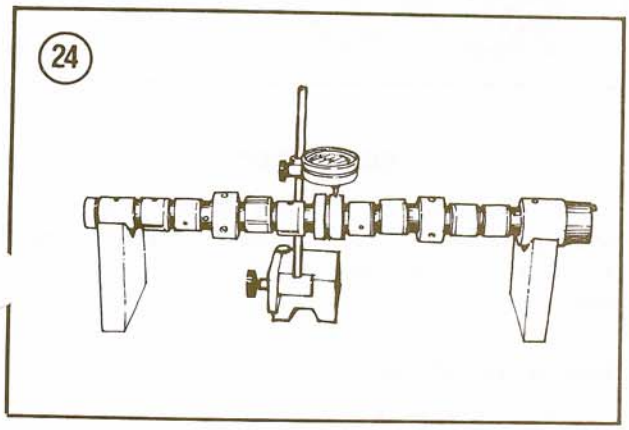

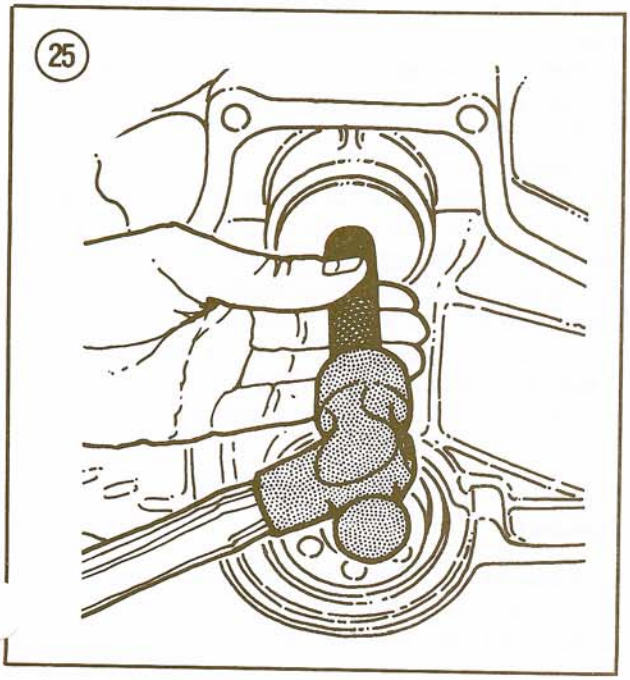

4. Suspend the camshaft between V-blocks and check for warpage with a dial indicator. See **Figure 24**. Replace if reading is greater than 0.005 in.
5. Check the distributor drive gear for excessive wear or damage.

Camshaft Bearing Replacement

Camshaft bearings are available pre-finished to the correct size and are not interchangeable between bores. A special puller and expanding collet are required for this procedure, which is not recommended for the amateur mechanic. Improper use of the special tools or use of the wrong expanding collet can result in severe bearing damage. If the bearings require replacement, have the job done by a Ford dealer or qualified machine shop.

Camshaft Rear Bearing Bore Plug Removal/Installation

If the engine is removed from the vehicle, replacement of the camshaft rear bearing bore plug is accomplished by drilling a small hole in the plug, inserting a screwdriver or pin punch and prying the plug from the engine block. If the engine is installed in the vehicle, the following procedure should be used.

1. Remove the transmission. See Chapter Nine.
2. Remove the clutch components (manual transmission) or torque converter (automatic transmission) and housing. See Chapter Nine.
3. Remove the flywheel as described in this chapter.
4. Remove the engine rear cover plate, then remove the bore plug as described above in this section.
5. Installation is the reverse of removal. Install the bore plug with a hollow drift of suitable diameter. See **Figure 25**.

OIL PAN

Removal

1. Disconnect the negative battery cable.
2. Remove the air cleaner assembly (2.8L) or air intake tube (2.9L).
3. Remove the fan shroud. Position shroud over fan.
4. Remove the distributor. See Chapter Eight.

5. Remove the nuts holding the front engine mount insulators to the crossmember.
6. Raise the vehicle with a jack and place it on jackstands.
7. Drain the crankcase oil and remove the oil filter. Remove the dipstick tube (2.8L only). See Chapter Three.
8. Automatic transmission—Remove the fluid filler tube and plug the pan hole.
9. 4-wheel drive—Disconnect the muffler inlet pipe(s) at the exhaust manifold.
10. Disconnect and lower the oil cooler bracket, if so equipped.
11. Remove the starter. See Chapter Eight.
12. Automatic transmission—Disconnect the oil cooler inlet and outlet lines at the bottom of the radiator. Plug all lines and fittings to prevent leakage and contamination.
13. Disconnect front stabilizer bar, if so equipped. Move bar out of the way.
14. Position a floor jack with wooden block under the oil pan. Raise the engine enough to insert wooden blocks between the engine mount insulators and No. 2 crossmember, then lower the engine onto the blocks and remove the jack.
15. Disconnect oil pan level sensor, if so equipped.
16. Remove the oil pan attaching bolts. Lower the oil pan and remove from under the vehicle.
17. Remove and discard the 2-piece pan gasket with the front and rear seals.

Inspection

1. Remove all gasket residue from the oil pan flanges and crankcase side rails with degreaser and a putty knife.
2. Clean the pan thoroughly in solvent.
3. Check the pan for dents or warped gasket surfaces. Straighten or replace the pan as required.

Installation

1. Coat the block side rails with an oil-resistant sealer and position the 2 side gaskets on the oil pan flanges.
2. Install the front and rear seals on the block.
3. Carefully place the oil pan in position, make sure the gaskets and seals are not misaligned and install a pan attaching bolt finger-tight on each side of the block.
4. Install the remaining bolts and tighten all to specifications (**Table 2**). Work from the center outward in each direction.

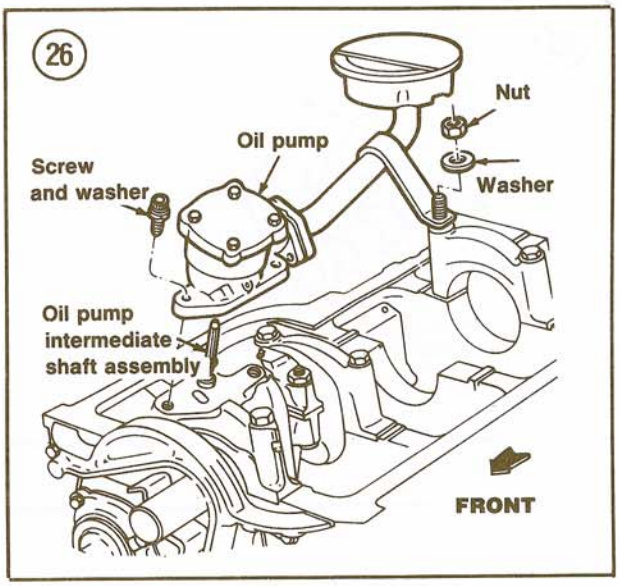

OIL PUMP

The oil pump is attached to the rear main bearing cap and is serviced as an assembly. Replace the oil pump with a new unit if it is not functioning properly.

Removal/Installation

Refer to **Figure 26** for this procedure.
1. Remove the oil pan as described in this chapter.
2. Remove the fastener holding the inlet tube assembly and oil pickup screen to the block.
3. Remove the fasteners holding the oil pump to the block. Remove the oil pump.
4. Remove the oil pump intermediate shaft from the block.
5. Before reinstalling the pump, fill it with engine oil and rotate the pump intermediate shaft to distribute oil throughout the pump.
6. Install the pump intermediate shaft in the engine block until firmly seated.
7. Install the oil pump to the block and tighten the fasteners to specifications (**Table 2**).
8. Install the oil pan as described in this chapter.

CYLINDER HEAD

Removal

1. Remove the intake and exhaust manifolds as described in this chapter.
2. Remove the rocker arm cover(s) and rocker assemblies as described in this chapter.

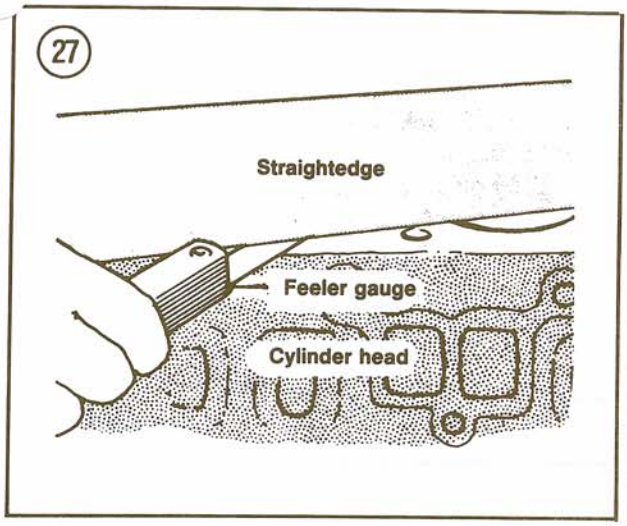

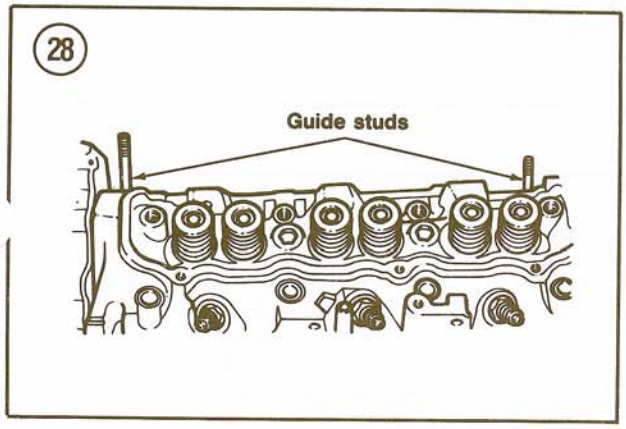

3. Loosen the cylinder head bolts, working from the center of the head to the end in each direction.
4. Remove the head bolts. Tap the end of the head with a plastic mallet to break the gasket seal. Remove the head from the engine.

CAUTION

Place the head on its side to prevent damage to the spark plugs or head gasket surface.

5. Remove and discard the head gasket.

Decarbonizing

1. Without removing the valves, remove all deposits from the combustion chambers, intake ports and exhaust ports. Use a fine wire brush dipped in solvent or make a scraper from hardwood. Be careful not to scratch or gouge the combustion chambers.
2. After all carbon is removed from the combustion chambers and ports, clean the entire head in solvent.
3. Clean away all carbon on the piston tops. Do not remove the carbon ridge at the top of the cylinder bore.
4. Clean all bolt holes. Use a cleaning solvent to remove dirt and grease.

Inspection

1. Check the cylinder head for signs of oil or coolant leaks before cleaning.
2. Clean the cylinder head thoroughly in solvent. While cleaning, look for cracks or other visible signs of damage. Look for corrosion or foreign material in the oil and water passages. Clean the passages with a stiff spiral brush, then blow them out with compressed air.
3. Check the cylinder head studs for damage and replace if necessary.
4. Check the spark plug holes for damaged threads. Have repairs made by a dealer, if required.
5. Check the cylinder head bottom (block mating) surface for flatness. Place an accurate straightedge along its surface. If there is any gap, measure it with a feeler gauge (**Figure 27**). If gap exceeds specifications, have the head resurfaced by a dealer or machine shop.

CAUTION

If head resurfacing is required, do not remove more than 0.010 in. Replace the head if a greater amount must be removed to correct warpage.

Installation

1. Make sure the cylinder head and block gasket mating surfaces and bolt holes are clean and free of deposits, sealant or other debris. Dirt in the block bolt holes or on the head bolt threads will affect tightening torque.
2. Recheck all visible oil passages in the cylinder head and engine block for cleanliness.
3. Fabricate guide studs from old cylinder head bolts by removing their heads. Install a guide stud at the front and rear of the block as shown in **Figure 28**.

NOTE

Head gaskets are not interchangeable. The gasket is marked FRONT and TOP for correct positioning.

4. Install a new cylinder head gasket over the guide studs on the block.
5. Position the cylinder head on the block. Remove the alignment dowels and install the head bolts.
6. Tighten the cylinder head bolts to specifications (**Table 2**) in 3 steps, following the sequence shown in **Figure 29** (2.8L) or **Figure 30** (2.9L).
7. Reverse Step 1 and Step 2 of *Removal* to complete installation.

VALVES AND VALVE SEATS

Service to the valves, valve seats and guides should be done by a dealer or a machine shop, since the procedures involved require special knowledge and expensive machine tools. A general practice among those who do their own service is to remove the cylinder head, perform all disassembly except valve removal, and take the head to a machine shop for inspection and service. Since the cost is low relative to the required effort and equipment, this is usually the best approach, even for experienced mechanics.

PISTON/CONNECTING ROD ASSEMBLY

Piston/Connecting Rod Removal

1. Remove the cylinder heads and oil pan as described in this chapter.
2. Pack the cylinder bores with clean shop rags. Remove the carbon ridge at the top of each bore with a ridge reamer. These can be rented for use. Vacuum out the shavings, then remove the shop rags.
3. Rotate the crankshaft so the connecting rod is centered in the bore.
4. Measure the clearance between each connecting rod and the crankshaft journal flange with a feeler gauge (**Figure 31**). This is connecting rod big-end play or side clearance. If the clearance exceeds specifications in **Table 1**, replace the connecting rod.
5. Remove the nuts holding the connecting rod cap. Lift off the cap, together with the lower bearing insert.

NOTE
If the connecting rod caps are difficult to remove, tap the studs with a wooden hammer handle.

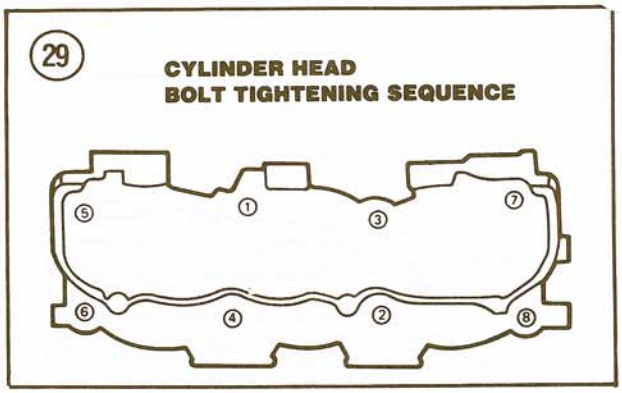

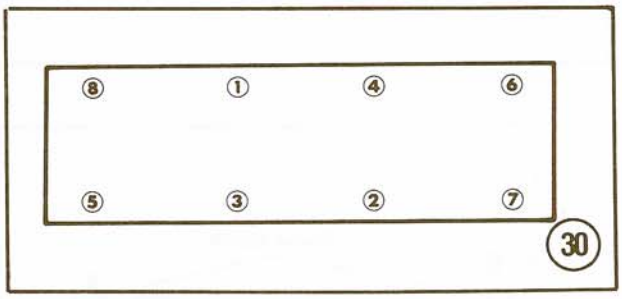

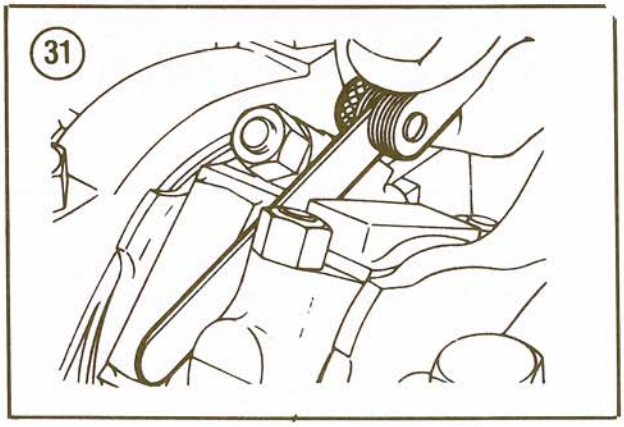

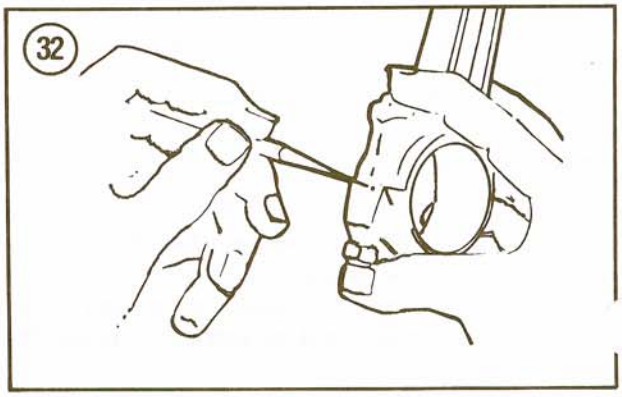

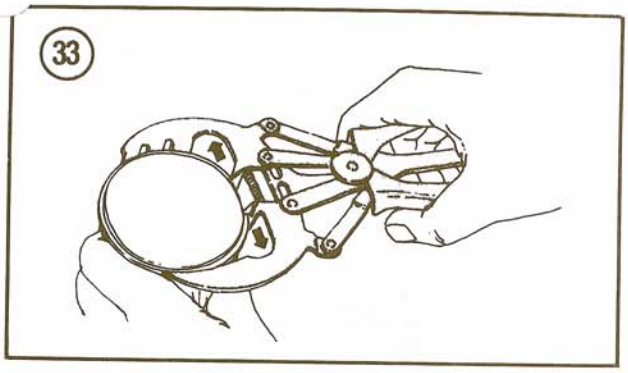

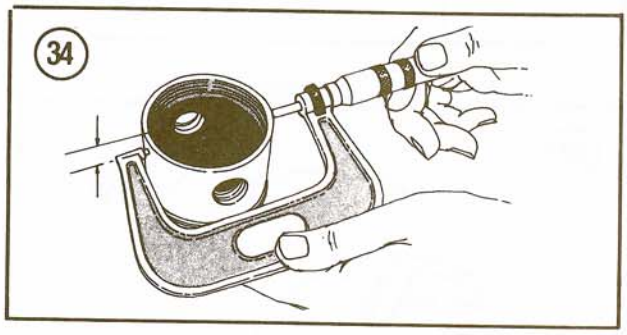

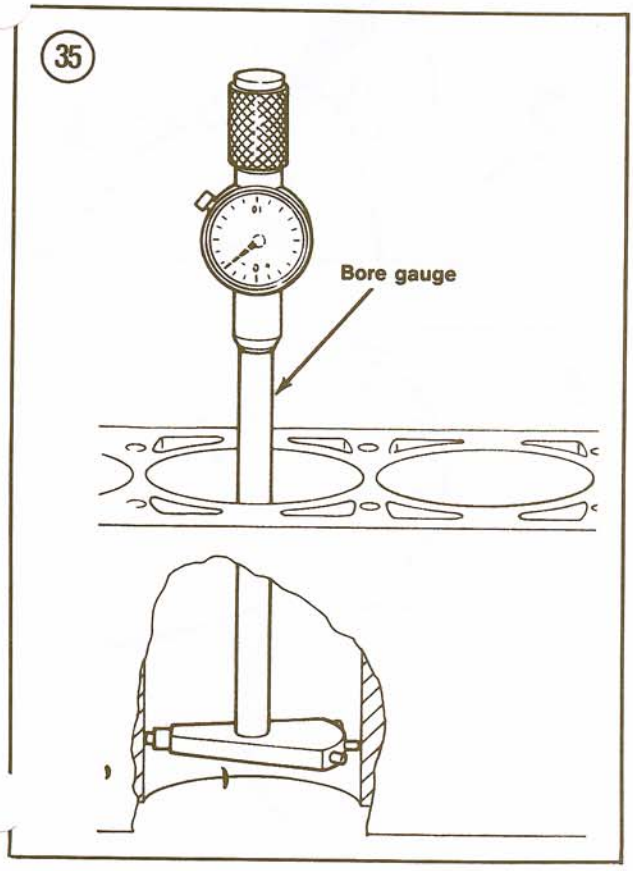

6. Use a wooden hammer handle to push the piston and connecting rod from the bore.

NOTE

*Mark the cylinder number on the top of each piston with quick-drying paint. Check for cylinder numbers or identification marks on the connecting rod and cap. If they are not visible, make your own (**Figure 32**).*

7. Remove the piston rings with a ring remover (**Figure 33**).

Piston Pin Removal/Installation

The piston pins are press-fitted to the connecting rods and hand-fitted to the pistons. Removal requires the use of a press and support stand. This is a job for a dealer or machine shop equipped to fit the pistons to the pins, ream the pin bushings to the correct diameter and install the pistons and pins on the connecting rods.

Piston Clearance Check

Unless you have precision measuring equipment and know how to use it properly, have this procedure done by a machine shop.

1. Measure the piston diameter with a micrometer (**Figure 34**). Measure just above the skirt and just below the rings at right angles to the piston pin bore.
2. Measure the cylinder bore diameter with a bore gauge (**Figure 35**) as described under *Cylinder Block Cleaning and Inspection* in this chapter.
3. Subtract the piston diameter from the largest cylinder bore reading to determine piston clearance. If it exceeds the specifications in **Table 1**, the cylinder must be rebored and an oversized piston installed.

Piston Ring Fit/Installation

1. Check the ring gap of each piston ring. To do this, position the ring at the bottom of the ring

5

travel area and square it by tapping gently with an inverted piston. See **Figure 36**.

NOTE

If the cylinders have not been rebored, check the gap at the bottom of the ring travel, where the cylinder is least worn.

2. Measure the ring gap with a feeler gauge as shown in **Figure 37**. Compare with specifications in **Table 1**. If the measurement is not within specifications, the rings must be replaced as a set. Check gap of new rings and file ring ends if gap is too small.
3. Check the side clearance of the rings as shown in **Figure 38**. Place the feeler gauge beneath the ring and insert it all the way into the ring groove. The feeler gauge should slide all the way around the piston without binding. Any wear that occurs will form a step at the inner portion of the ring groove's lower edge. If large steps are discernable, replace the piston. Compare the inserted feeler gauge size with the specification in **Table 1**. If the measurement is not within specifications, either the rings or the ring grooves are worn. Inspect and replace as necessary.
4. Using a ring expander tool (**Figure 39**), carefully install the oil control ring, then the compression rings.

NOTE

Oil rings consist of 3 segments. The wavy segment goes between the flat segments to act as a spacer. Upper and lower flat segments are interchangeable.

5. Position the ring gaps as shown in **Figure 40**.

Connecting Rod Inspection

Have the connecting rods checked for straightness by a dealer or a machine shop. Connecting rods can spring out of alignment during shipping or handling. When installing new connecting rods, have them checked for misalignment before installing the piston and piston pin.

Connecting Rod Bearing Clearance Measurement

1. Place the connecting rods and upper bearing halves on the proper connecting rod journals.

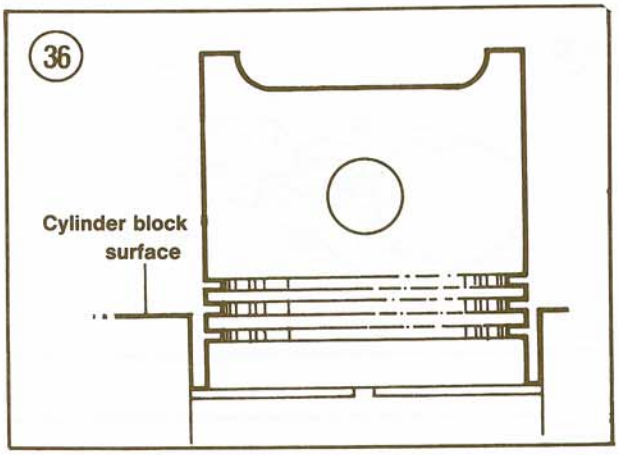

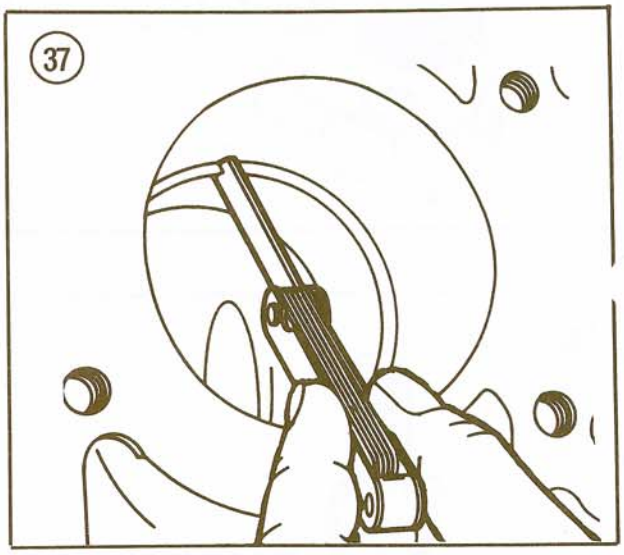

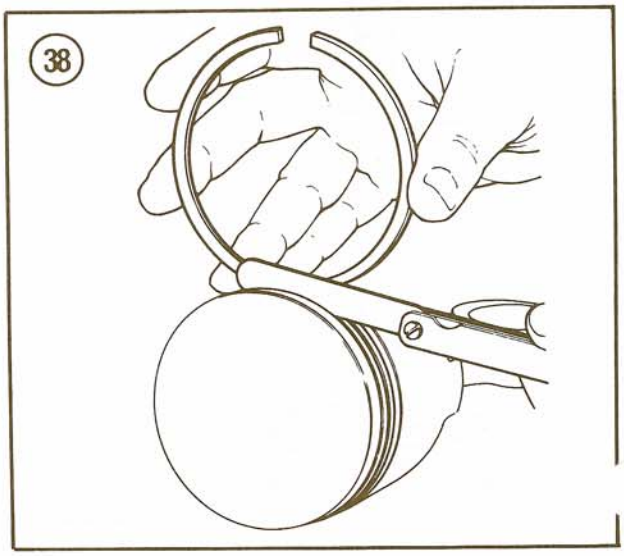

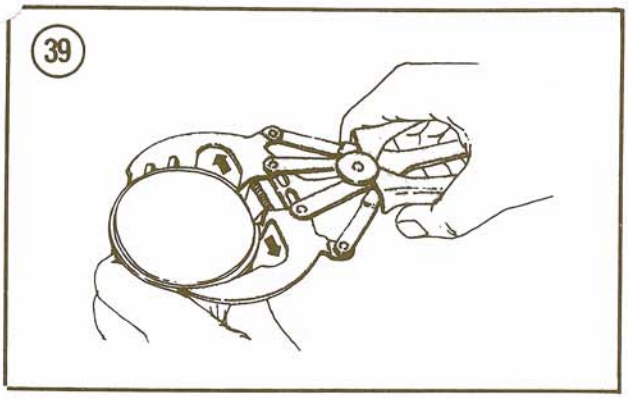

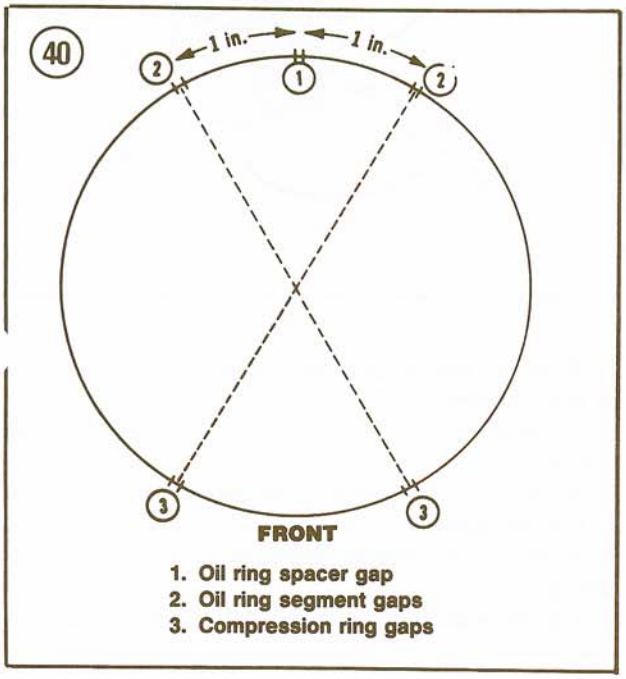

1. Oil ring spacer gap
2. Oil ring segment gaps
3. Compression ring gaps

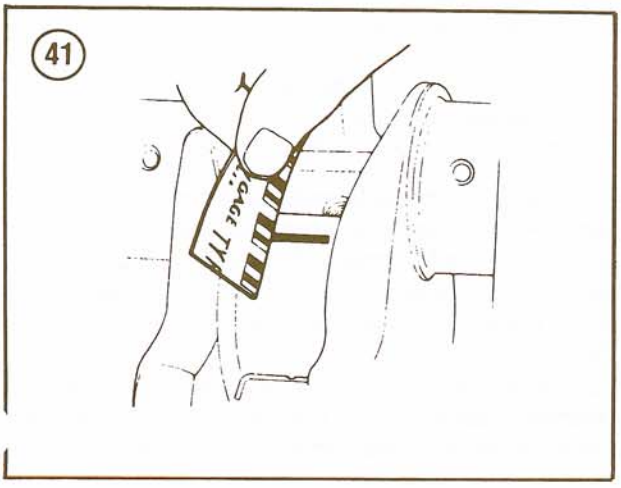

2. Cut a piece of Plastigage the width of the bearing. Place the Plastigage on the journal, then install the lower bearing half and cap.

NOTE

Do not place Plastigage over the journal oil hole.

3. Tighten the connecting rod cap to specifications (**Table 2**). Do not rotate the crankshaft while the Plastigage is in place.
4. Remove the connecting rod caps. Bearing clearance is determined by comparing the width of the flattened Plastigage to the markings on the envelope. See **Figure 41**. If the clearance is excessive, the crankshaft must be regrcund and undersize bearings installed.

Piston/Connecting Rod Installation

Connecting rods and bearing caps are numbered from 1 to 3 in the passenger side bank and from 4 to 6 in the driver's side bank. The numbers on the rod and cap must be on the same side when installed in the cylinder. When switching a connecting rods from one block or cylinder to another, always fit new bearings and number the rod and cap to correspond with the new cylinder number.

1. Make sure the pistons are correctly installed on the connecting rods. The cylinder number side of the connecting rod and piston arrow or notch should be positioned as shown in **Figure 42**.
2. Make sure the ring gaps are positioned as shown in **Figure 40**.

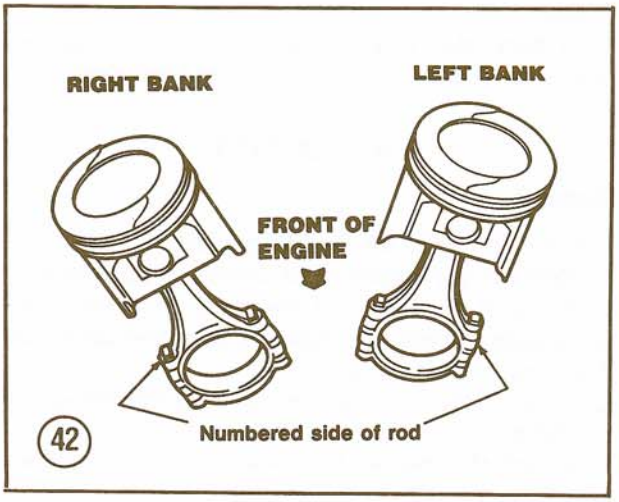

3. Slip short pieces of hose over the connecting rod studs to keep them from nicking the crankshaft. Tape will work if you do not have the right diameter hose, but it is more difficult to remove.
4. Immerse the entire piston in clean engine oil. Coat the cylinder wall with oil.

CAUTION

Use extreme care in Step 5 to prevent the connecting rod from nicking the crankshaft journal.

5. Install the piston/connecting rod assembly in its cylinder with a piston ring compressor tool as shown in **Figure 43**. Tap lightly with a wooden hammer handle to insert the piston. Make sure the connecting rod number corresponds to the cylinder number.

NOTE

Install piston with notch in the piston head facing toward the front of the engine.

6. Clean the connecting rod bearings carefully, including the back sides. Coat the journals and bearings with clean engine oil. Place the bearings in the connecting rod and cap.
7. Turn the crankshaft throw to the bottom of its stroke. Push the piston downward until the connecting rod bearing seats on the crankshaft journal.
8. Remove the protective hose or tape and install the connecting rod cap. Make sure the rod and cap marks align.
9. Lightly lubricate the connecting rod bolt threads with SAE 30W engine oil and install the cap nuts finger-tight, then tighten the nuts to specifications (**Table 2**).
10. Check the connecting rod big-end play as described under *Piston/Connecting Rod Removal.*

CRANKSHAFT

Removal

Refer to **Figure 44** for this procedure.
1. Remove the engine as described in this chapter.
2. Remove the flywheel (manual) or drive plate (automatic) from the rear of the crankshaft as described in this chapter.
3. Mount the engine on an engine stand, if available.
4. Invert the engine to bring the oil pan to an upright position.

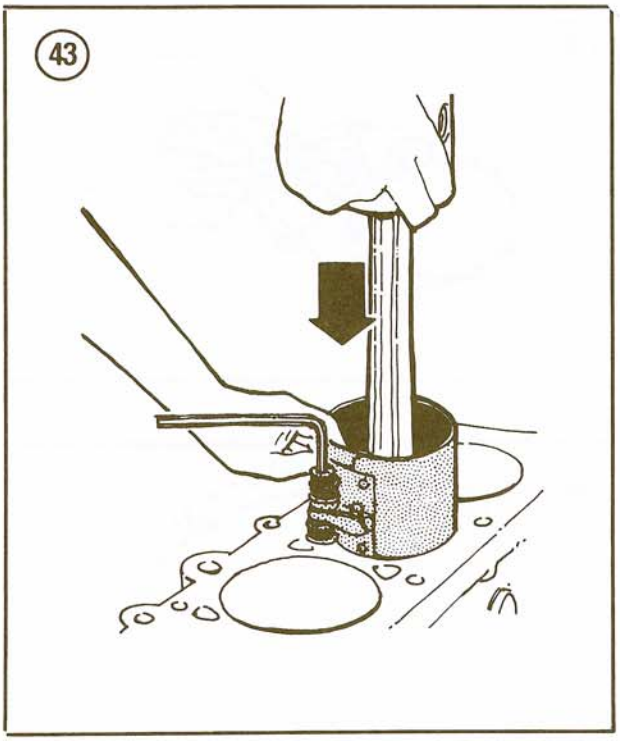

5. Remove the oil pan and oil pump as described in this chapter.
6. Remove the front cover as described in this chapter.
7. Remove the spark plugs to permit easy rotation of the crankshaft.
8. Remove the timing gears as described in this chapter.
9. Check crankshaft end play as described in this chapter.
10. Unbolt and remove the connecting rod bearing caps and bearing inserts. Move the rod/piston assemblies away from the crankshaft.

NOTE

If the caps are difficult to remove, lift the bolts partway out, then pry them from side to side.

11. Check the main bearing caps for identification numbers or marks. If none are visible, clean the caps with a wire brush. If marks still cannot be seen, make your own with quick-drying paint. Mark them with a number and an arrow indicating the front.
12. Unbolt and remove the main bearing caps with bearing inserts. Mark the backs of the bearing inserts with the same identification number as the caps.

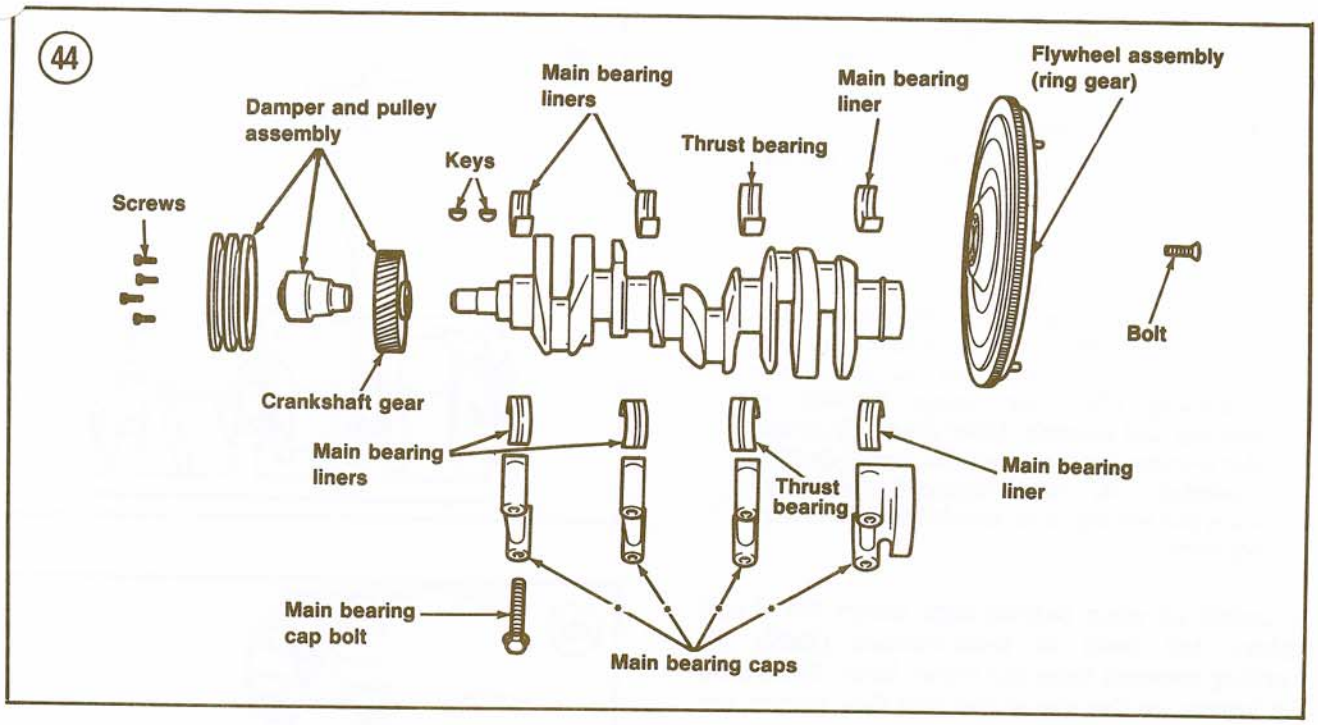

13. Carefully lift the crankshaft from the engine block and place it on a clean workbench.
14. Remove the bearing inserts from the block. Place the bearing caps and inserts in order on a clean workbench.

Inspection

1. Clean the crankshaft thoroughly with solvent. Blow out the oil passages with compressed air.
2. Check the main and connecting rod journals for scratches, grooves, scoring or cracks. Check oil seal surface for burrs, nicks or other sharp edges which might damage a seal during installation.

NOTE

If you do not have precision measuring equipment, have a machine shop perform Step 3.

3. Check all journals against specifications (**Table 1**) for out-of-roundness and taper. If necessary, have the crankshaft reground and install undersize bearings.

Main Bearing Clearance Measurement

Main bearing clearance is measured with Plastigage in the same manner as the connecting rod bearing clearance, described in this chapter. If wear exceeds that specified in **Table 1**, a 0.001 or 0.002 in. undersize bearing may be used on one-half of the journal in combination with the standard bearing on the other half. If undersize bearings are used on more than one journal, the undersize bearing should be installed in the cylinder block, not in the main bearing cap. If this does not produce the correct crankshaft-to-main bearing clearance, the crankshaft should be refinished by a Ford dealer or a competent machine shop and undersized main bearings installed.

Installation

1. With the main bearings removed from the bearing caps and cylinder block, clean the main bearing bores in the block, the main bearing caps and main bearing inserts with lacquer thinner to remove all contamination.
2. If the old main bearings are being reinstalled, be sure they are reinstalled in the main bearing caps and cylinder block bores from which they were removed. If new bearings (or undersize bearings) are being installed, be sure they are installed in the proper locations.
3. Make sure the bearing locating tangs are correctly positioned in the cylinder block and bearing cap notches.

4. Coat the main bearing surfaces and the crankshaft journals with a thick coat of clean, heavy engine oil.
5. Carefully place the crankshaft in the main bearings installed in the cylinder block, taking care not to damage the sides of the No. 3 (thrust) bearings.

NOTE

Rotate the crankshaft during tightening to make sure it is not binding. If the crankshaft becomes hard to turn, stop and find out why before continuing. Check for foreign material on bearings and journals. Make absolutely certain that bearings are the correct size, especially if the crankshaft has been reground. Never use undersize bearings if the crankshaft has not been reground.

6. Install all main bearing caps *except No. 3* and tighten the bolts to specifications (**Table 2**), working outward from the center bolts. Make sure the arrows on the top of the caps face toward the front of the engine.
7. Install the No. 3 (thrust) bearing cap finger-tight.
8. Pry the crankshaft forward against the thrust surface of the upper half of No. 3 bearing. See **Figure 45**.
9. Hold the crankshaft in this position and pry the thrust cap toward the rear of the engine (**Figure 46**) to align the thrust surfaces of both bearing halves.
10. Hold the crankshaft in the forward position and tighten the bearing caps to specifications (**Table 2**). See **Figure 47**.
11. Force the crankshaft to the rear of the engine and check end play as described in this chapter.
12. Install a new crankshaft rear oil seal as described in this chapter.
13. Install the 2 wedge-shaped rear main bearing cap seals between the block and cap with their round side facing the cap. A blunt-end screwdriver makes a good installation tool.
14. Install the crankshaft gear as described in this chapter.
15. Reverse Steps 1-10 of *Crankshaft Removal* in this chapter to complete installation.

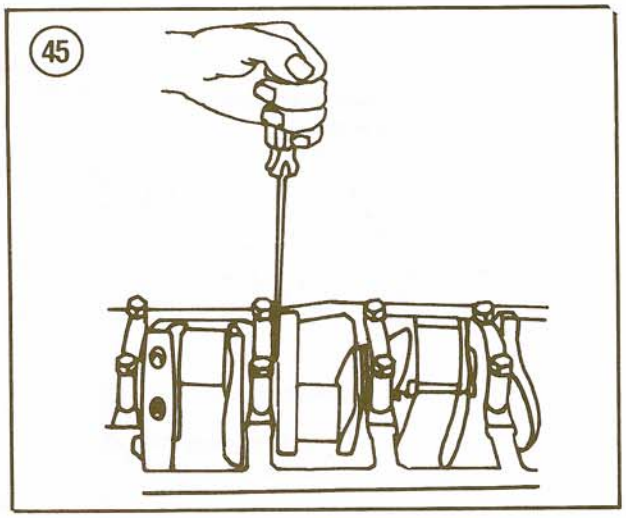

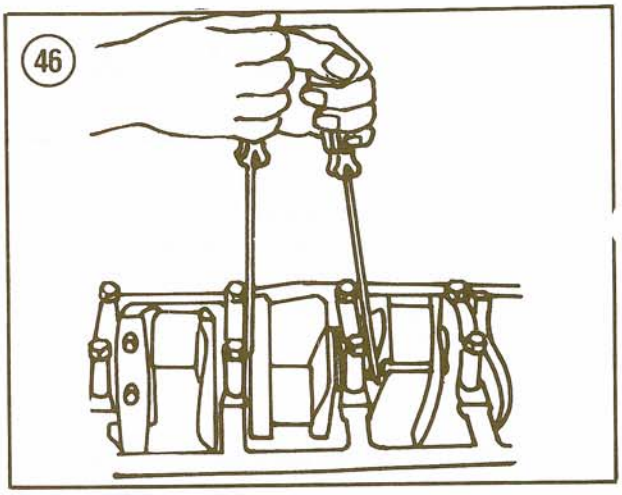

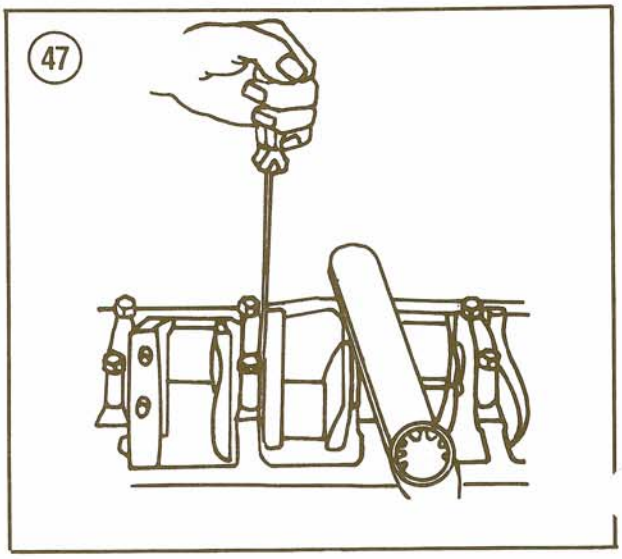

REAR MAIN BEARING SEAL

Replacement

1. Remove the engine as described in this chapter.
2. Manual transmission—Remove the clutch. See Chapter Nine.

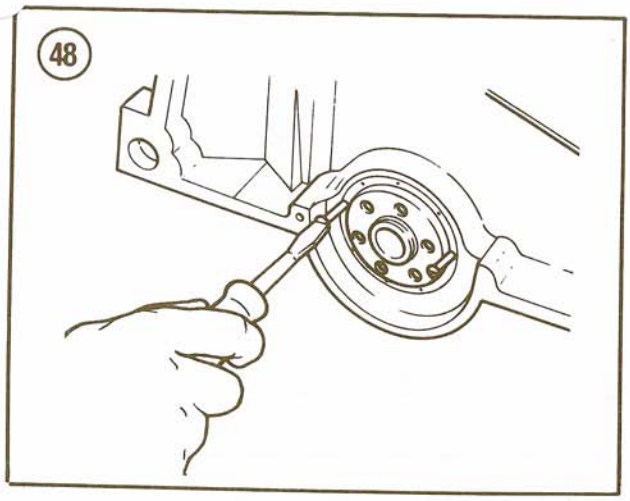

48

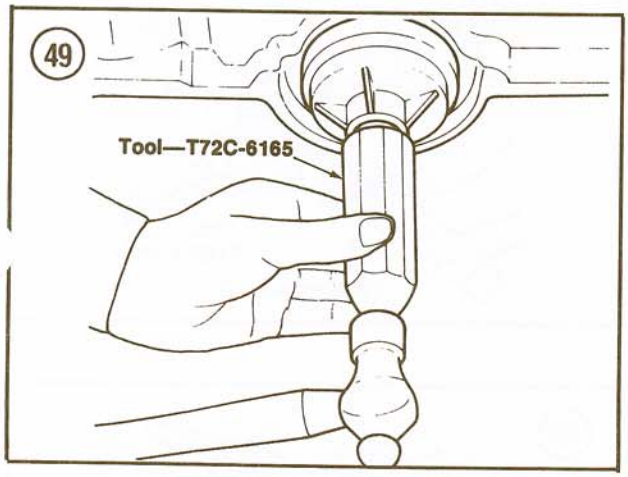

49

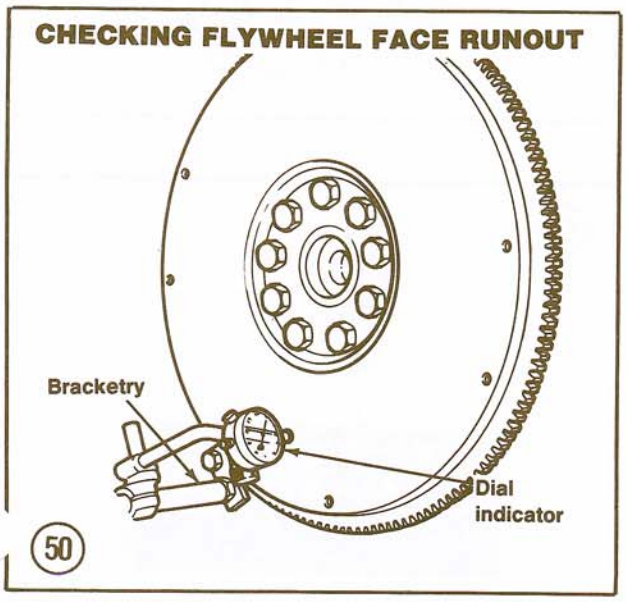

50

3. Remove the flywheel (manual) or drive plate (automatic) as described in this chapter.
4. Remove the flywheel housing and rear plate.
5. Punch a hole on each side of the rear oil seal just above the bearing cap-to-cylinder block split line.
6. Install a sheet metal screw in each hole (**Figure 48**). Place small wooden blocks against the cylinder block and pry against the screws with a pair of large screwdrivers to remove the seal. Work slowly and carefully to avoid any possible damage to the crankshaft seal surface.
7. Clean the oil seal recess in the block and main bearing cap.
8. Wipe the seal-to-block surface of the new seal with engine oil. Lubricate the crankshaft and seal contact surfaces with Lubriplate or equivalent.
9. Install the seal in the recess and drive it in place with tool part No. T72C-6165. See **Figure 49**.
10. Reverse Steps 1-4 to complete installation.

FLYWHEEL OR DRIVE PLATE

Removal/Installation

1. Remove the engine as described in this chapter or remove the transmission as described in Chapter Nine.
2. Remove the clutch from the flywheel on manual transmission models. See Chapter Nine.
3. Remove the flange bolts holding the flywheel or drive plate to the crankshaft. Remove the flywheel/drive plate.
4. Installation is the reverse of removal. Gradually tighten flywheel/drive plate bolts to specifications (**Table 2**) in a diagonal pattern. Wipe all oil, grease and other contamination from the flywheel surface.

Inspection

1. Visually check the flywheel/drive plate surfaces for scoring, wear and heat damage (blue-tinted areas). If the surface is glazed or slightly scratched, have the flywheel resurfaced by a machine shop.
2. Measure flywheel runout with a dial indicator (**Figure 50**). Replace or resurface the flywheel if runout exceeds specifications (**Table 1**).

NOTE

The ring gear is an integral part of the drive plate on automatic transmission models. If defective, the entire assembly must be replaced.

3. Inspect the flywheel ring gear teeth. If the teeth are chipped, broken or excessively worn, have a

new ring gear shrunk onto the flywheel by a machine shop.

PILOT BEARING

Engines fitted to manual transmissions are equipped with a sealed roller bearing clutch pilot.

1. Remove the clutch and transmission. See Chapter Nine.
2. Remove the bearing with Ford tool part No. T59L-101-A and a slide hammer. See **Figure 51**.
3. Install a new bearing (seal facing the transmission) with installer part No. T74P-7137-H and driver part No. T74P-7137-A (**Figure 52**).

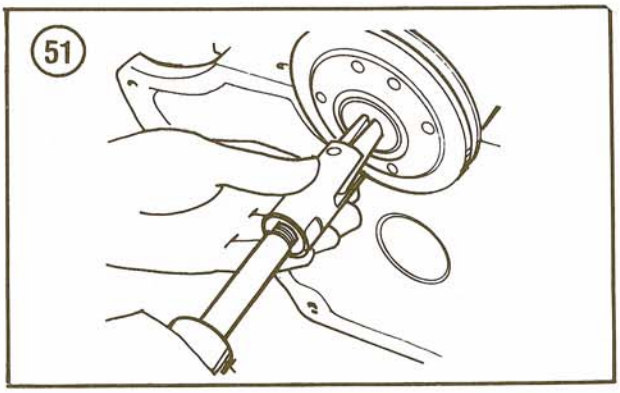

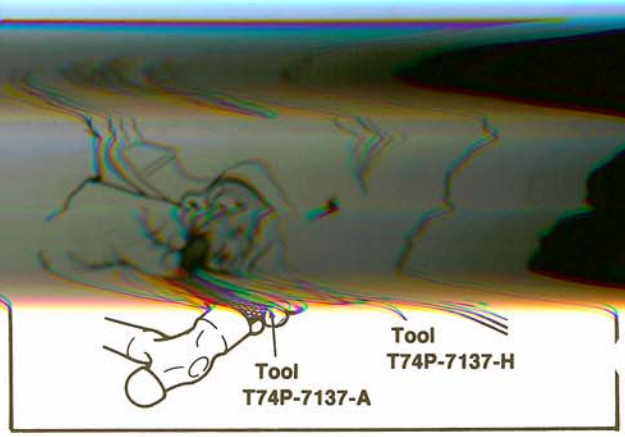

CYLINDER BLOCK CLEANING AND INSPECTION

1. Clean the block thoroughly with solvent. Remove any gasket residue from the machined surfaces. Check all core plugs for leaks and replace any that are suspect. See *Core Plugs* in this chapter. Remove any plugs that seal oil passages. Check oil and coolant passages for sludge, dirt and corrosion while cleaning. If the passages are very dirty, have the block boiled out by a machine shop. Blow out all passages with compressed air. Check the threads in the head bolt holes to be sure they are clean. If dirty, use a tap to true up the threads and remove any deposits.
2. Examine the block for cracks. To confirm suspicions about possible leak areas, use a mixture of 1 part kerosene and 2 parts engine oil. Coat the suspected area with this solution, then wipe dry and immediately apply a solution of zinc oxide dissolved in wood alcohol. If any discoloration appears in the treated area, the block is cracked and should be replaced.
3. Check flatness of the cylinder block deck or top surface. Place an accurate straightedge on the block. If there is any gap between the block and straightedge, measure it with a feeler gauge (**Figure 53**). Maximum warpage is 0.003 in. or less over any 6 inches, in any direction, and 0.006 in. over the full length of the cylinder block. Have the block resurfaced by a machine shop if warp is in excess of specifications. Do not remove more than 0.010 in. from the block/cylinder head mating surface.
4. Measure the cylinder bores with a bore gauge for out-of-roundness or excessive wear (**Figure 54**). Measure the cylinder bores at top and bottom, in both front-to-rear and side-to-side directions. Compare the measurements to specifications

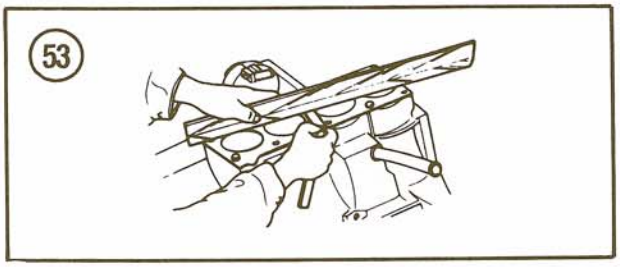

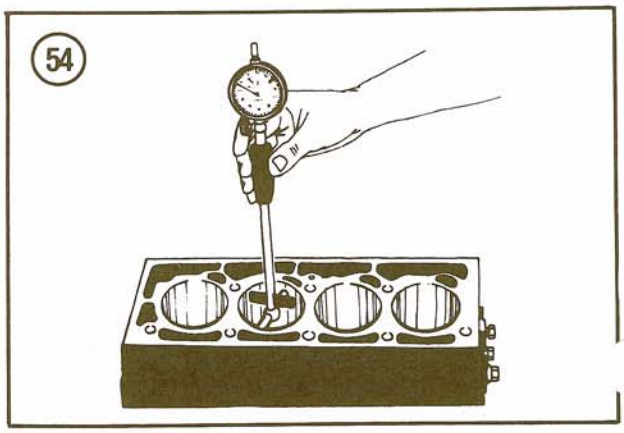

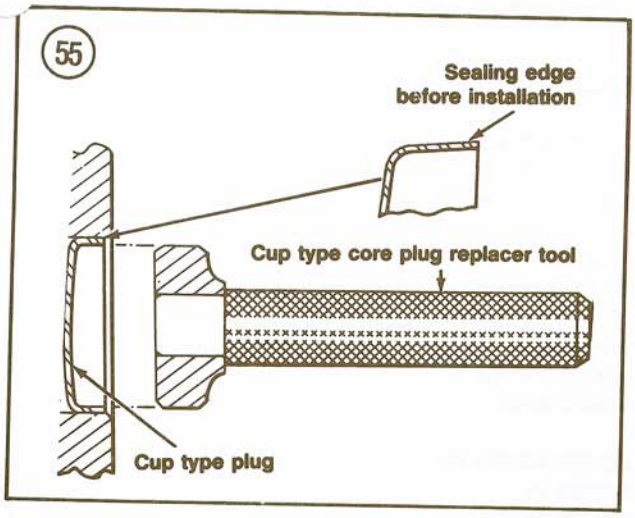

(**Table 1**). If the cylinders exceed the maximum tolerances, have them rebored by a Ford dealer or competent machine shop. Reboring is also necessary if the cylinder walls are badly scuffed or scored. Before boring, install all main bearing caps and tighten the cap bolts to specifications (**Table 2**).

CORE PLUGS

The condition of all core plugs in the block and cylinder head should be checked whenever the engine is out of the vehicle for service. If any signs of leakage or corrosion are found around one core plug, replace them all.

Removal/Installation

CAUTION

Do not drive core plugs into the engine casting. It will be impossible to retrieve them and they can restrict coolant circulation, resulting in serious engine damage.

1. Drill a hole in the center of the plug and pry it out with an appropriate size drift or pin punch. Work carefully to avoid damage to the plug bore. On large core plugs, the use of a universal impact slide hammer is recommended.
2. Clean the plug bore thoroughly and inspect for any damage that might interfere with proper sealing of the new plug. If damage is evident, true the surface by boring for the next oversize plug.

NOTE

Oversize plugs can be identified by an "OS" stamped in the flat on the cup side of the plug.

3. Coat the inside diameter of the plug bore and the outer diameter of the plug with sealer. Use an oil-resistant sealer if the plug is to be installed in an oil gallery or a water-resistant sealer for plugs installed in the water jacket.
4. Install the plug as shown in **Figure 55** with an appropriate core plug replacer tool. Tap the plug in place until its flanged edge is below the chamfered edge of the bore.

Table 1 V6 ENGINE SPECIFICATIONS

General specifications	
Piston displacement	
2.8L	2,800 cc (171 cid)
2.9L	2,900 cc (177 cid)
Bore	3.66 in.
Stroke	
2.8L	2.70
2.9L	2.83
Cylinder numbering (front to rear)	
Right bank	1-2-3
Left bank	4-5-6
Firing order	1-4-2-5-3-6
Cylinder bore	
Diameter	3.6614-3.6630 in.
Out-of-round	0.005 in. max.
Taper	0.010 in. max.
Piston clearance	0.0011-0.0019 in.

(continued)

Table 1 V6 ENGINE SPECIFICATIONS (continued)

Piston rings	
Compression rings	
Side clearance	0.0020-0.0033 in.
Width	
Top ring	0.0778-0.0783 in.
Bottom ring	0.1172-0.1177 in.
Gap	0.015-0.023 in.
Oil ring	
Side clearance	Snug
Gap	0.015-0.055 in.
Piston pin	
Diameter	0.9446-0.9450 in.
Clearance	0.0003-0.0006 in.
Fit in rod	Interference
Crankshaft	
Main journal diameter	2.2433-2.2441 in.
Journal taper	0.0006 in.
Journal out-of-round	0.0006 in.
Journal runout	
2.8L	0.005 in. max.
2.9L	0.002 in. max.
Main bearing clearance	
2.8L	0.0005-0.0022 in.
2.9L	0.0005-0.0019 in.
End play	0.004-0.008 in.
Connecting rod journal diameter	2.1252-2.1260 in.
Journal taper	0.0006 in.
Journal out-of-round	0.0006 in.
Rod bearing clearance	0.0005-0.0022 in.
Rod side clearance	0.0004-0.011 in.
Camshaft	
Lobe lift	
2.8L	0.2555 in.
2.9L	0.3730 in.
Journal diameter	
No. 1	1.7285-1.7293 in.
No. 2	1.7135-1.7143 in.
No. 3	1.6985-1.6992 in.
No. 4	1.6835-1.6842 in.
Bearing clearance	0.001-0.0026 in.
Runout	0.005 in. max.
Out-of-round	0.0003 in. max.
End play	0.009 in. max.
Cylinder head	
Gasket surface flatness	0.003 in. any 6 in. or 0.006 in. overall max.
Crankshaft to rear block face runout	0.005 in.
Diameter	
Distributor shaft bearing bore	0.4534-0.4549 in.
Main bearing bore	2.3866-2.3874 in.
Taper bore	0.8750-0.8760 in.
Flywheel/drive plate	
Clutch face runout (manual transmission)	0.005 in.
Ring gear lateral runout	
Manual transmission	0.025 in.
Automatic transmission	0.060 in.

(continued)

Table 1 V6 ENGINE SPECIFICATIONS (continued)

Valve system	
Lifter	Hydraulic
Rocker arm ratio	1.46:1
Rocker arm shaft diameter	0.7799-0.7811 in.
Pushrod runout	0.020 in.
Lash clearance (cold)	
Intake	0.014 in.
Exhaust	0.016 in.
Face angle	44°
Seat angle	45°
Face runout	0.002 in. max.
Seat runout	0.0015 in. max.
Head diameter	
Intake	
2.8L	1.562-1.577 in.
2.9L	1.780-1.810 in.
Exhaust	
2.8L	1.261-1.276 in.
2.9L	1.410-1.420 in.
Stem clearance	
Intake	0.0008-0.0025 in.
Exhaust	0.0018-0.0035 in.
Stem diameter	
Intake	0.3159-0.3167 in.
Exhaust	0.3149-0.3156 in.
Valve springs	
Free length	1.91 in.
Pressure	
Closed	60-68 lb. @ 1.585 in.
Open	138-149 lb. @ 1.222 in.
Installed height	1 37/64-1 39/64 in.

Table 2 V6 TIGHTENING TORQUES

Fastener	ft.-lb.	N•m
Alternator		
Adjustment arm	60-70	70-95
Mounting bracket		
To cylinder head	14-22	20-30
To block	29-40	40-55
Pivot bolt	45-61	61-82
Carburetor spacer		
Socket head screw	14-22	20-30
Stud	6	8
Nut	12-14	16-20
Camshaft		
Gear bolt		
2.8L	30-36	41-49
2.9L	19-28	26-38
Thrust plate	13-16	17-21
Connecting rod nut	19-24	26-33
Crankshaft pulley	85-96	115-130

(continued)

Table 2 V6 TIGHTENING TORQUES (continued)

Cylinder head bolt		
2.8L		
Step 1	29-40	39-54
Step 2	40-51	54-69
Step 3	70-85	95-115
2.9L		
Step 1	22	30
Step 2	51-55	70-75
Step 3	*	*
EGR valve to spacer		
Nut	14-22	20-30
Stud	2-7	3-10
Exhaust gas sensor	28-32	39-43
Exhaust manifold	20-30	27-40
Fan-to-fan clutch	6-8	8-11
Fan clutch-to-water pump hub	15-25	21-34
Heat shroud		
Inner-to-outer	4-5	5-7
Manifold stud nut	14-22	20-30
Flywheel	47-52	64-70
Front cover	13-16	17-21
Front plate-to-block	10-13	13-17
Fuel pump **		
Step 1	1.5-6	2-8
Step 2	12-14	16-18
Step 3	15-18	21-25
Fuel rail-to-intake manifold	7-10	9-13
Intake manifold nut/bolt ***		
Step 1	3-6	4-8
Step 2	6-11	8-15
Step 3	11-15	15-21
Step 4	15-18	21-25
Intake manifold stud-to-block	10-12	14-16
Main bearing cap bolt	65-75	88-102
Oil pan bolt	5-8	7-10
Oil drain plug	15-21	21-28
Oil filter adapter	15-30	20-40
Oil pump pickup tube nut	12-15	17-21
Rocker arm cover	3-5	4-7
Rocker arm shaft support bolt	43-50	59-67
Spark plugs	18-28	25-38
Thermostat housing		
2.8L	12-15	17-21
2.9L	6-9	9-12
Upper air intake manifold-to-lower manifold		
Step 1	7	10
Step 2	15-18	21-25
Water pump	7-9	9-12
Water pump pulley	14-22	20-30

* Turn 90°.
** Hand start each bolt a minimum of 2 threads.
*** Hand start and snug nuts at positions 3 and 4 in torque sequence. Repeat final step after engine warm-up.

CHAPTER SIX

6

FUEL, EXHAUST AND EMISSION CONTROL SYSTEMS

This chapter consists of service procedures for the air cleaner, carburetor, fuel injection system, fuel pump, fuel tank and lines, fuel-related emission controls and the exhaust system.

The fuel system on gasoline-powered vehicles consists of a rear-mounted fuel tank connected by a fuel line to a mechanical (carburetted) or electric (fuel injected) fuel pump. The pump delivers fuel through a fuel filter to the carburetor or injectors.

The fuel system on diesel-powered vehicles consists of a rear-mounted fuel tank connected by a fuel line to a sedimentor (2.2L) or a fuel conditioner (2.3L). The sedimentor or fuel conditioner removes water from the fuel before delivering it to the injection pump through an inline fuel heater. The 2.2L diesel engine uses no separate fuel pump; the injection pump serves this purpose. The 2.3L turbo diesel has an electric fuel pump.

Various systems are used to remove harmful pollutants from the exhaust gases of gasoline-powered models before they are released into the atmosphere. These systems include a positive crankcase ventilation (PCV) system to return blowby gas and other vapors to the combustion chambers for further burning. An evaporative emission control system holds and stores fuel vapor from the fuel system so that it will eventually be burned in the combustion chambers instead of being vented into the atmosphere. A Thermactor air injection system injects fresh air into the exhaust system to promote further burning of pollutants. An exhaust gas recirculation (EGR) system lowers the combustion chamber temperatures by metering a small amount of exhaust gas into the intake manifold. The catalytic converter promotes more complete burning of gases in the exhaust system.

A one-barrel Carter YFA carburetor is used on carburetted 4-cylinder gasoline engines first sold outside California (except high altitude). California, high altitude and Fuel Saver carburetted 4-cylinder gasoline engines use a one-barrel Carter YFA-FB (feedback) carburetor. Both carburetors have an all-electric choke and provisions for a remote altitude compensator for high-altitude applications.

A multi-point fuel injection system is used on 1985 and later 2.3L 4-cylinder gasoline engines.

The 2.8L V6 engine uses a 2-barrel model 2150A feedback carburetor; the 2.9L V6 has multi-point fuel injection.

All carburetted 4-cylinder (except high altitude) engines use the MCU (microprocessor control unit) system. Both V6 engines and the fuel injected 2.3L 4-cylinder engine use the EEC-IV system. The MCU and EEC-IV (electronic engine control) systems are designed to control emissions while providing maximum fuel economy, driveability and performance. A microprocessor reads inputs from a variety of sensors, compares the data against an internal program and sends controlling output signals to various components in order to maintain a proper air-fuel ratio and ignition timing.

The EEC-IV microprocessor contains a memory to store trouble codes when one or more EEC-IV system components malfunctions. Any malfunction of the EEC-IV system should be diagnosed and serviced by a Ford dealer or qualified garage with the necessary special tools and test equipment.

With the exception of the fuel tank and carburetor, the repair of all systems discussed in this chapter is by parts replacement. The carburetor is considered a part of the emission control system. Due to strict emission regulation requirements, the only adjustments that can be performed on the carburetor by an amateur mechanic are curb idle and fast idle settings. The idle mixture and other adjustments are either permanently pre-set at the factory or require the use of tools and special test equipment not available outside a Ford dealership or other competent garage.

Diesel fuel system service should be limited to air cleaner and fuel filter replacement (Chapter Three) and fuel pump (2.3L turbo diesel) and fuel tank removal/installation in this chapter. Refer all other diesel fuel system service to a Ford dealer.

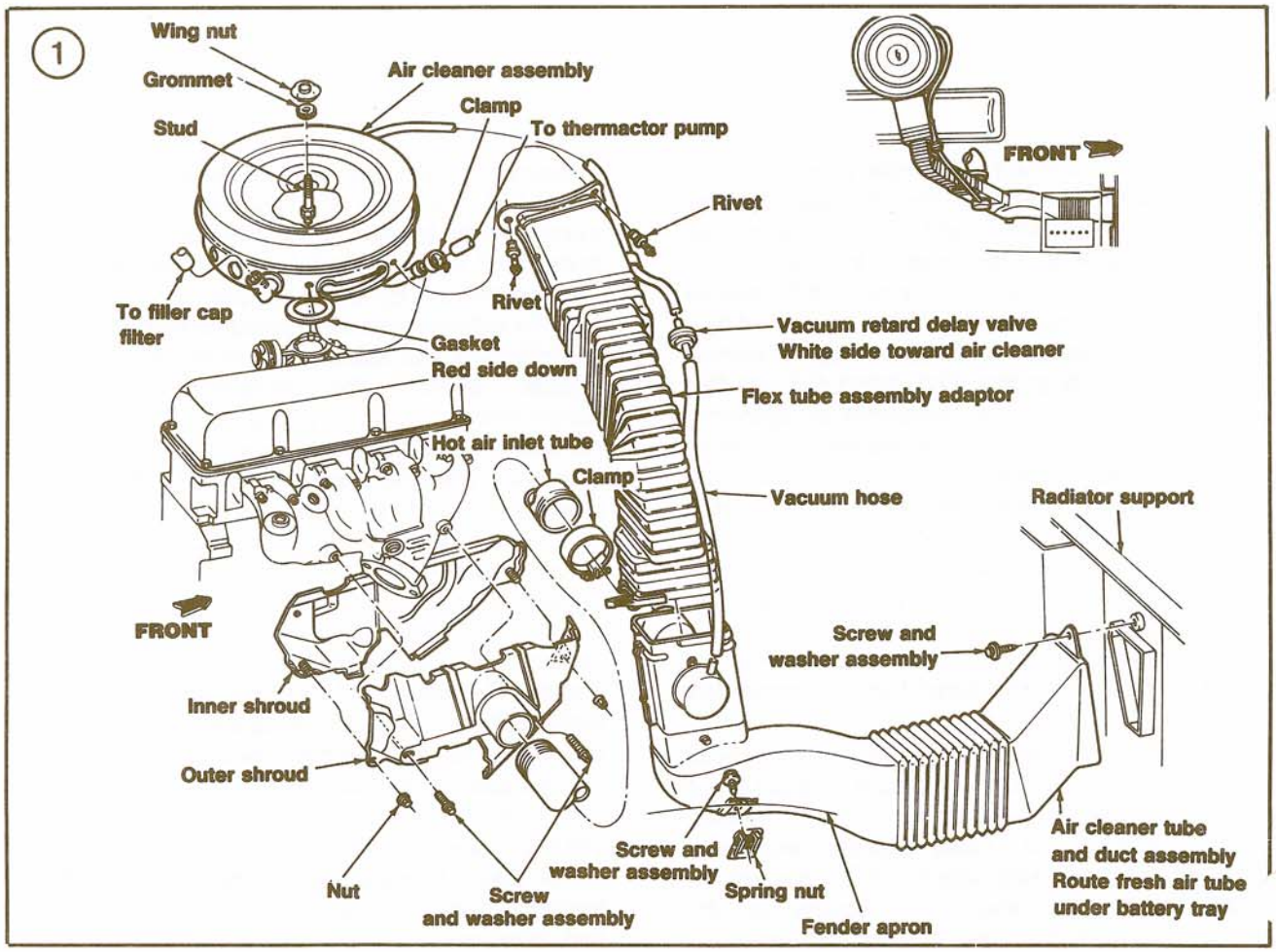

AIR CLEANER SYSTEM (GASOLINE MODELS)

The air cleaner furnishes temperature-regulated air to the carburetor (2.0L/2.3L/2.8L) or throttle body (2.3L EFI) to improve driveability. The air cleaner duct/valve assembly is connected to a fresh air inlet tube and a hot air tube/shroud assembly surrounding the exhaust manifold. Air flow from these 2 sources is controlled by a door in the duct. This door is operated by a vacuum motor mounted on the duct. The door and motor are connected by mechanical linkage inside the duct. A temperature sensor inside the air cleaner housing on 4-cylinder models modulates vacuum to the motor according to air cleaner temperature. On V6 engines, an air charge temperature sensor in the upper intake manifold performs this function. **Figure 1** (2.0L), **Figure 2** (2.3L carburetted), **Figure 3** (2.3L EFI), **Figure 4** (2.8L V6) and **Figure 5** (2.9L EFI V6) show the various components in the air cleaner system.

When the engine is first started, the air cleaner draws hot air from near the exhaust manifold through the hot air tube on carburetted models (A, **Figure 6**). As the engine warms up, the duct door

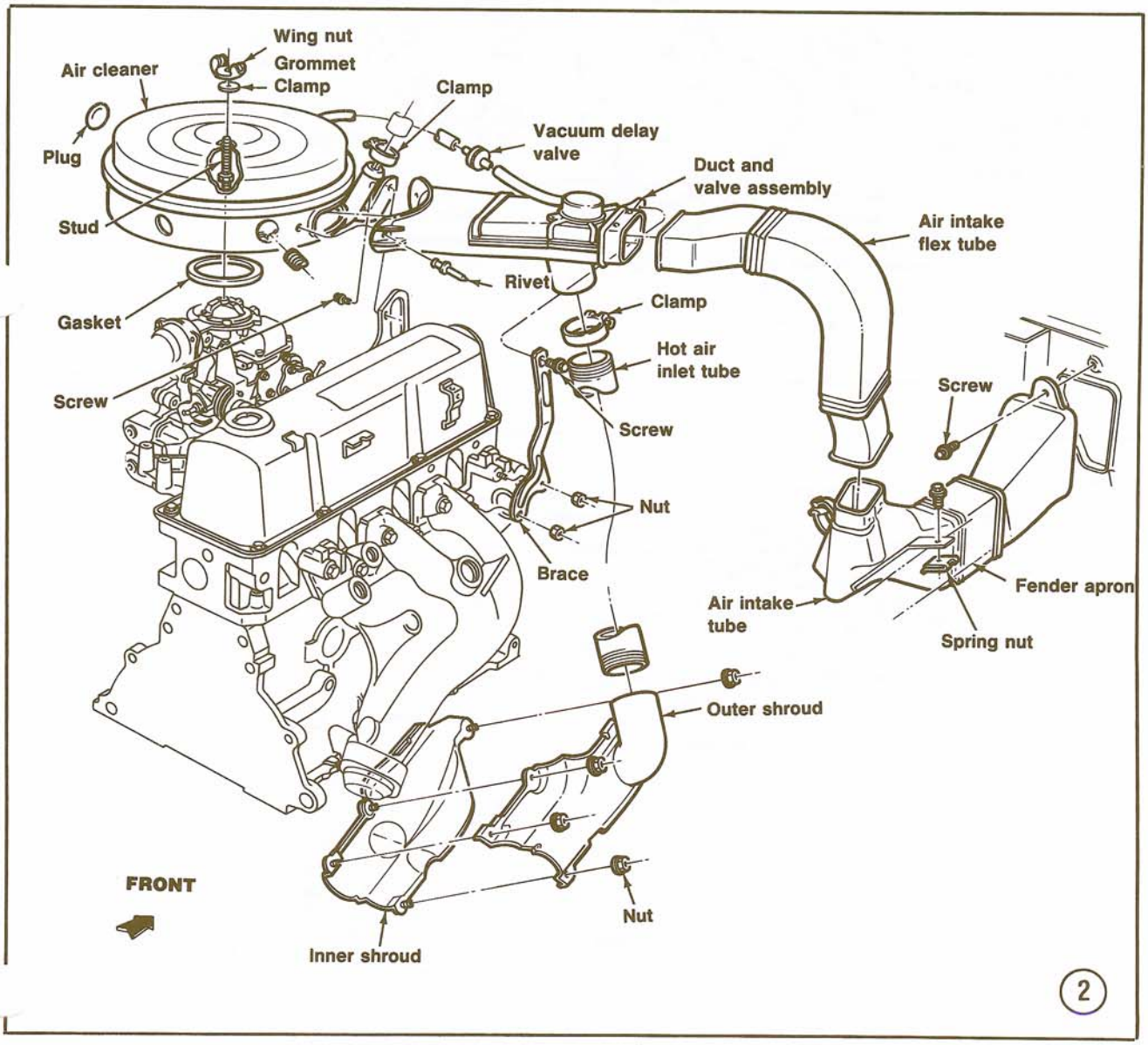

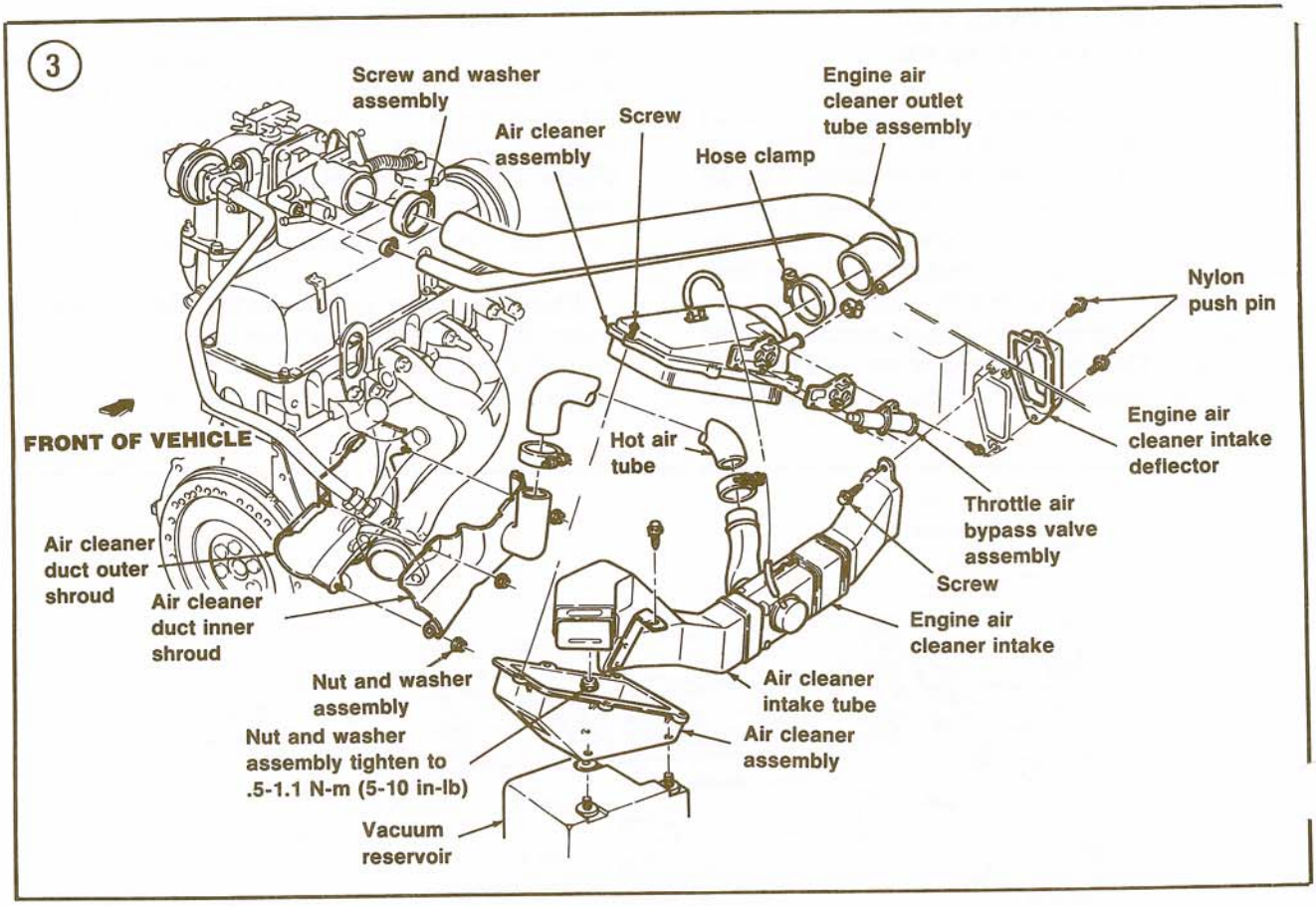
3
Screw and washer assembly
Air cleaner assembly
Screw
Engine air cleaner outlet tube assembly
Hose clamp
Nylon push pin
FRONT OF VEHICLE
Hot air tube
Engine air cleaner intake deflector
Throttle air bypass valve assembly
Air cleaner duct outer shroud
Air cleaner duct inner shroud
Screw
Engine air cleaner intake
Nut and washer assembly
Air cleaner intake tube
Nut and washer assembly tighten to .5-1.1 N-m (5-10 in-lb)
Air cleaner assembly
Vacuum reservoir

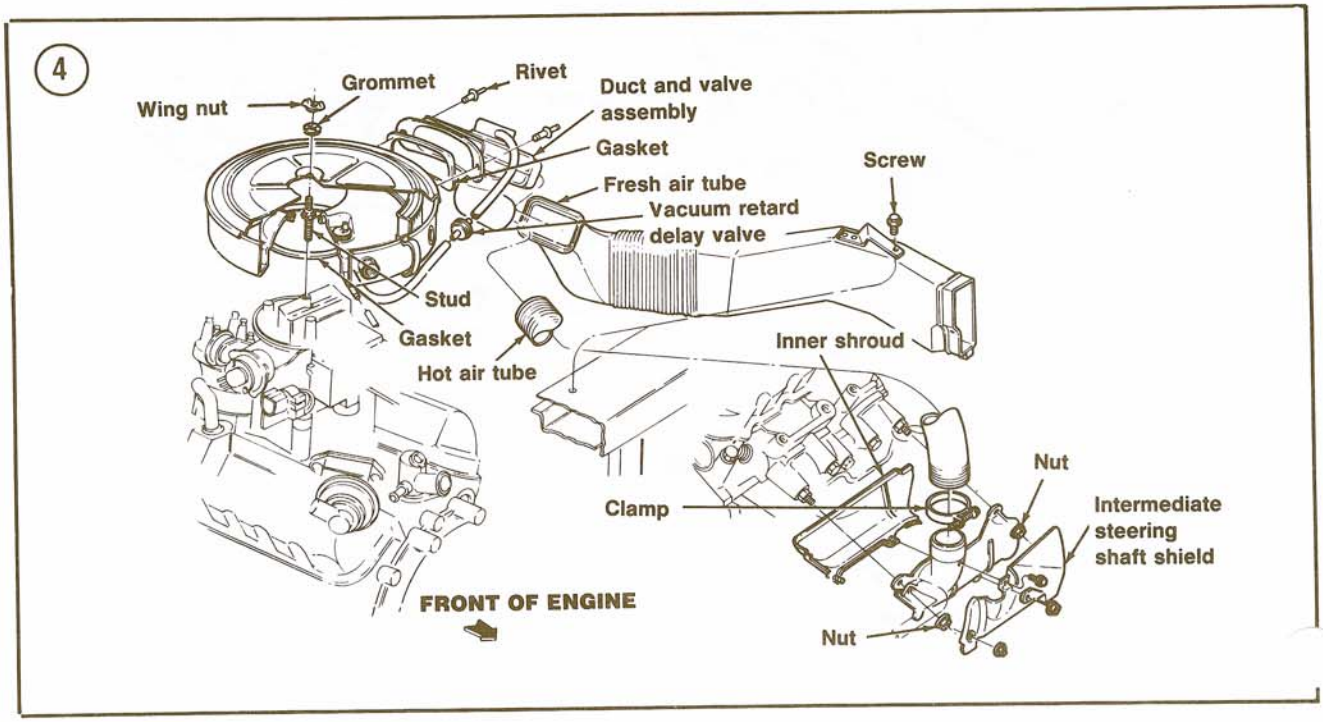
4
Wing nut
Grommet
Rivet
Duct and valve assembly
Gasket
Screw
Fresh air tube
Vacuum retard delay valve
Stud
Gasket
Hot air tube
Inner shroud
Nut
Clamp
Intermediate steering shaft shield
FRONT OF ENGINE
Nut

5

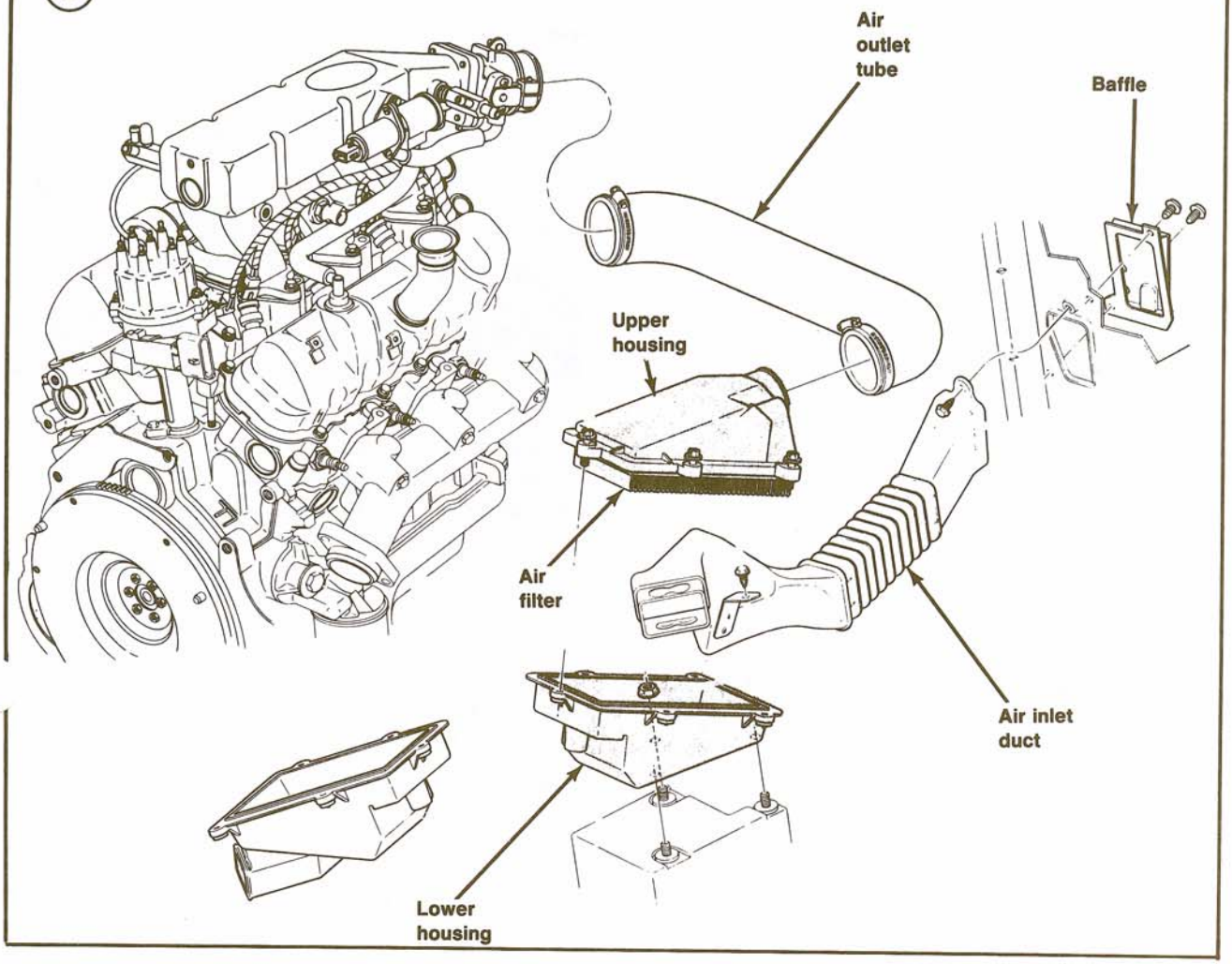

6

OPERATION (VACUUM-OPERATED DUCT)

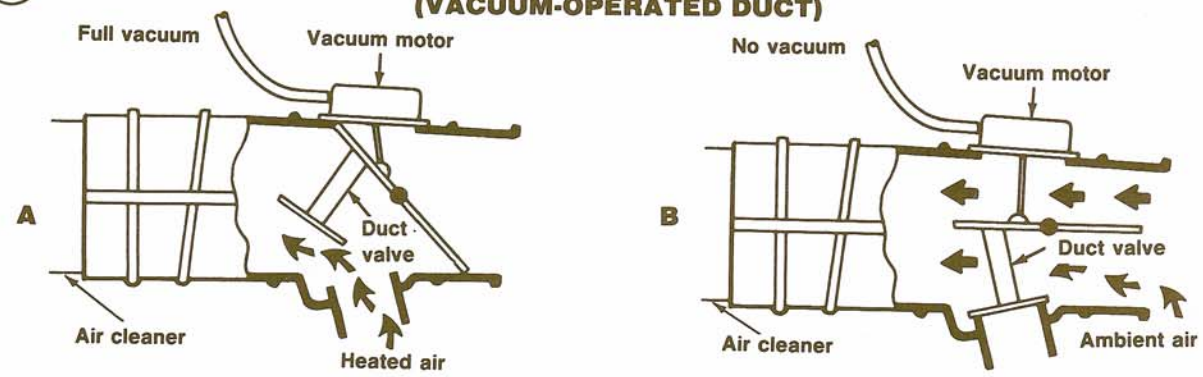

changes position to partially block off air from the hot air tube. Once the air cleaner temperature reaches a specified value, the duct door closes off the hot air tube completely (B, **Figure 6**). This allows the air cleaner to draw intake air from the air inlet tube.

Some engines may use a vacuum retard delay (cold weather modulator) valve to keep the duct door closed during low temperature, low manifold vacuum operating conditions for improved emission control during cold outside temperatures.

Filter Replacement

See *Air Cleaner Filter*, Chapter Three.

Air Cleaner Removal/Installation (Carburetted Engine)

NOTE

Leave the filter element inside the air cleaner housing during removal. This will prevent dirt and debris from dropping into the carburetor.

Refer to **Figure 1**, **Figure 2** or **Figure 4** for this procedure.

1. 2.0L engine—Disconnect the vacuum line at the vacuum motor. If a check valve is installed in the line, disconnect the line at the check valve instead of the motor.
2. Unsnap the flex tube attaching tab at the tube and duct assembly (on some models, it may be necessary to remove a screw). Disconnect the flex tube from the tube and duct assembly.
3. Disconnect the hot air tube from the exhaust manifold shroud.
4. Label and disconnect the PCV/air pump hoses and any vacuum lines on the side of the air cleaner housing.
5. Unscrew and remove the air cleaner cover wing nut.
6. Lift the air cleaner off the carburetor, tilt to one side and disconnect the vacuum line from the temperature sensor nipple on the underside (**Figure 7**).
7. Remove the air cleaner housing and flex tube assembly. Place on a clean flat surface to prevent damage to the duct/valve or hot air tube.
8. Check the carburetor air horn mounting gasket. If not found on the carburetor air horn (**Figure 8**), it may be attached to the underside of the air cleaner housing.

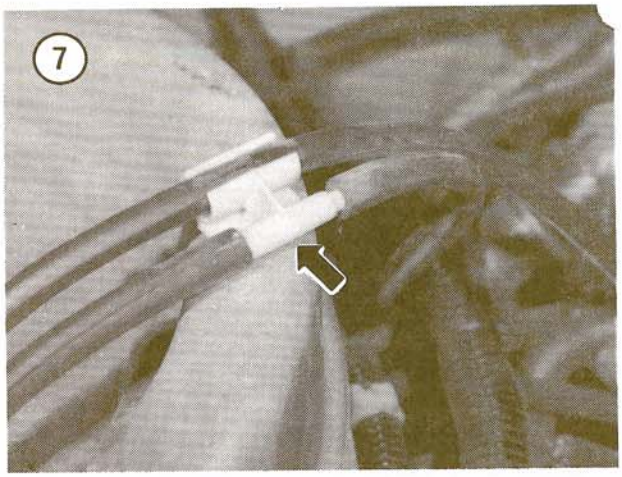

9. Installation is the reverse of removal. If the old mounting gasket is damaged or missing, install a new gasket to prevent a vacuum leak. The gasket should be installed with its red side facing the carburetor. Tighten the wing nut snugly but do not overtorque or carburetor air horn warpage may result.

Air Cleaner Removal/Installation (2.3L EFI)

Refer to **Figure 3** for this procedure.

1. Unclamp and remove the air intake tube from the duct/valve assembly and air cleaner tray.
2. Disconnect the vacuum line at the bi-metallic temperature sensor in the air cleaner cover.
3. Remove the sheet metal screw holding the flex tube to the radiator support.
4. Unhook the bracket from the plastic fender.
5. Slide the remote duct and valve assembly from underneath the battery tray. Remove the air cleaner assembly.
6. Installation is the reverse of removal.

Air Cleaner Removal/Installation (2.9L V6 EFI)

Refer to **Figure 5** for this procedure.

1. Disconnect and remove the air outlet tube between the throttle body and the air cleaner upper housing.
2. Remove the screw holding the air inlet duct to the lower housing. Remove the upper and lower housing as an assembly.
3. Installation is the reverse of removal.

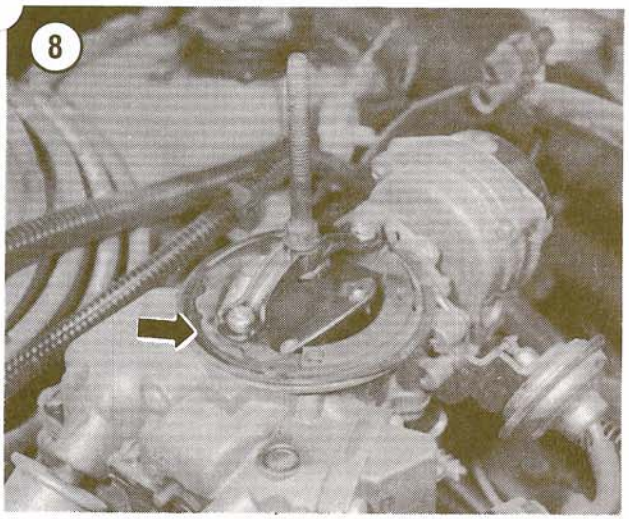

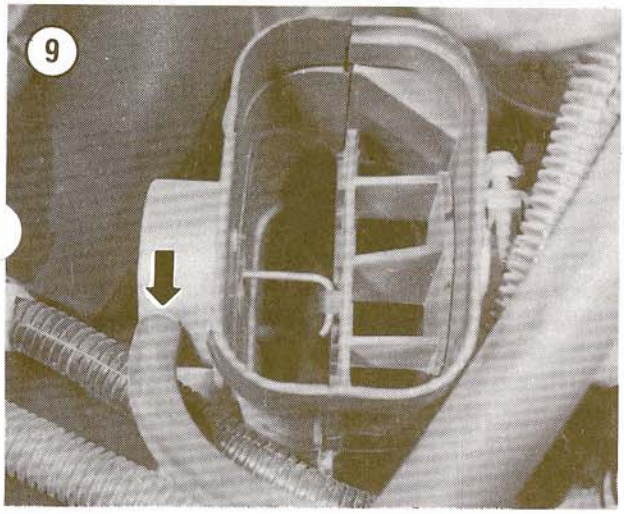

Duct and Valve Function Test (Carburetted Engines)

1. Disconnect the fresh air intake from the duct/valve assembly and carefully fold it out of the way to permit visual observation of the duct door.
2. Depress door with a finger to check for binding or sticking. Correct as required.
3. Disconnect the vacuum line at the vacuum motor. See **Figure 9** (typical). Connect a hand vacuum pump to the nipple. The duct door should be in the position shown in **Figure 9**.
4. Apply at least 7 in. Hg vacuum. The duct door should move and block off the fresh air inlet completely.

Bend the vacuum pump hose to trap the vacuum. With the vacuum trapped, the duct door should remain closed for 60 seconds. If it does not, check for binding linkage between the vacuum motor and door.
6. If the linkage is not corroded and does not bind, replace the duct and valve assembly as described in this chapter.

Duct and Valve Assembly Replacement (Carburetted Engines)

1. Remove the air cleaner from the vehicle as described in this chapter.
2. Place the air cleaner on a clean flat surface and unsnap the 4 clip latches holding the cover in place. Remove the cover and filter element.
3. Disconnect the vacuum line at the vacuum motor.
4. Grind off the heads of the 2 rivets holding the duct and valve assembly to the air cleaner housing. Punch the rivets out. Remove the old duct/valve assembly from the housing.
5. Install a replacement duct and valve assembly to the air cleaner housing (fasteners are provided with the new assembly).
6. Reconnect the vacuum motor line. Install the filter element and the cover and secure with the 4 clip latches.
7. Reinstall the air cleaner on the engine as described in this chapter.

Temperature Sensor Operational Test (4-cylinder Carburetted Engines)

NOTE
Perform this procedure with the engine off and cold.

1. Set the parking brake and block the drive wheels.
2. Perform the *Duct and Valve Function Test* in this chapter. Make sure the valve functions properly before continuing with this procedure.
3. Unscrew and remove the air cleaner cover wing nut. Remove cover and filter element.
4. Check the hot air and fresh air intake tubes for cracks or other damage. Repair or replace as needed.
5. Disconnect the fresh air intake tube from the duct and valve assembly. Lift the air cleaner up enough to see into the duct assembly.

6. Look inside the duct. The duct door should be in the open or full fresh air position (B, **Figure 6**).
7. Depress the duct door with a finger to check for binding or sticking. Correct as required.
8. Tape a thermometer capable of reading in excess of 120° F as close as possible to the temperature sensor on the air inlet side of the sensor. Reinstall the air cleaner cover without the wing nut.
9. Start the engine and let it idle until it reaches normal operating temperature (upper radiator hose hot).
10. Disconnect the flex tube from the duct and valve assembly. The duct door should move to the closed or full heat position (A, **Figure 6**).
11. Remove the air cleaner cover and note the temperature reading of the thermometer. It should be approximately 120° F.
12. If the duct door is not closed to heated air in Step 10 or the thermometer does not read approximately 120° F in Step 11, reinstall the air cleaner cover and allow the engine to idle for another 5 minutes, then repeat Step 10 and Step 11.
13. If the duct door is still not closed to heated air when the thermometer reading is 120° F or higher, replace the sensor.
14. Reinstall the air cleaner filter element and cover.

Sensor Replacement

1. Remove the air cleaner housing as described in this chapter.
2. Disconnect the 2 vacuum lines at the sensor (**Figure 10**).
3. Pry the sensor retaining clip tabs open. Note position of the old sensor and remove from the air cleaner housing.
4. Install a new sensor in the same relative position. Press down on the sensor edges and install the retaining clip on the vacuum line connectors.
5. Reconnect the 2 vacuum lines to the sensor nipples from which they were disconnected.

AIR CLEANER (DIESEL MODELS)

Filter Replacement

See *Air Cleaner Filter*, Chapter Three.

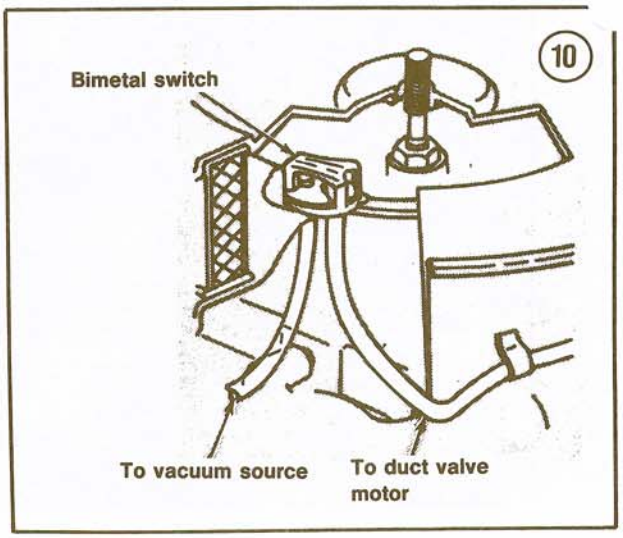

Air Cleaner Removal/Installation (2.2L Diesel)

Refer to **Figure 11** for this procedure.
1. Unclamp and disconnect the inlet and outlet tubes at the air cleaner housing.
2. Unscrew the cover wing nut, remove the cov and air cleaner filter element.
3. Remove the 4 screw/washer assemblies from the air cleaner housing bracket holding it to the fender apron.
5. Remove the air cleaner housing from the engine compartment.
6. Installation is the reverse of removal.

Air Cleaner Removal/Installation (2.3L Turbo Diesel)

Refer to **Figure 12** for this procedure.
1. Unclamp and disconnect the vacuum hose and flexible air intake tube from the air cleaner housing.
2. Disconnect the preformed intake tube from the air cleaner housing. If tube removal is required, remove the screw holding it to the radiator support and remove from the engine compartment.
3. Unsnap the cover latches. Remove the cover and air cleaner filter element.
4. Remove the screw inside the air cleaner housing base holding the assembly to the fender apron.
5. Remove the screws holding the air cleaner housing base to the mounting bracket. Remove the housing base.
6. Installation is the reverse of removal.

(11)

AIR CLEANER (2.2L DIESEL)

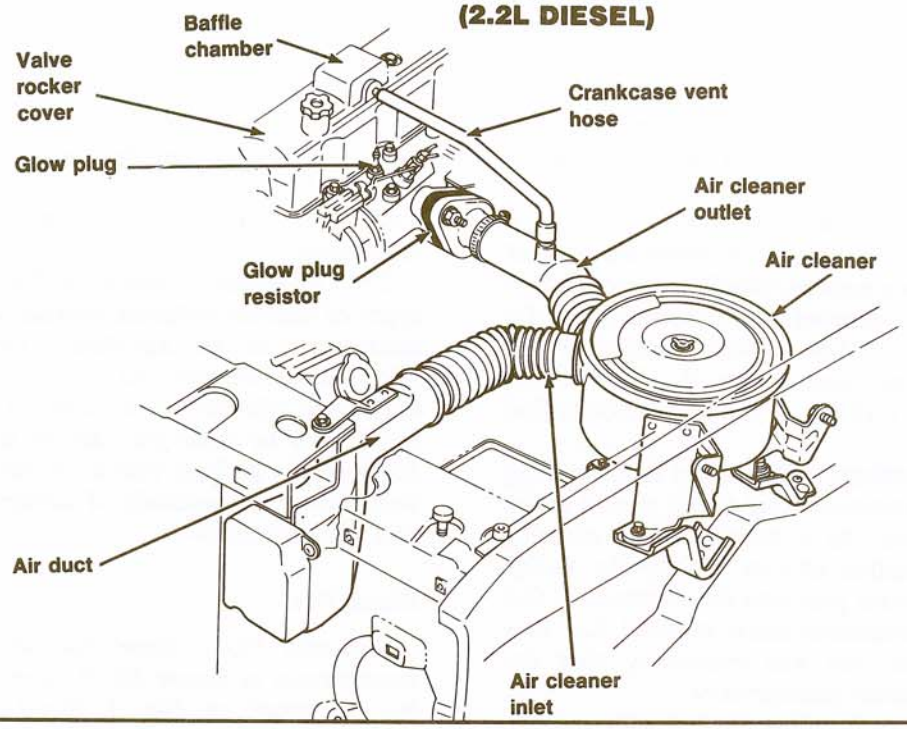

(12)

AIR CLEANER INSTALLATION (2.3L DIESEL ENGINE)

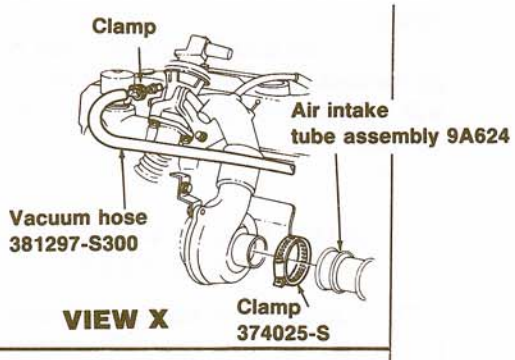

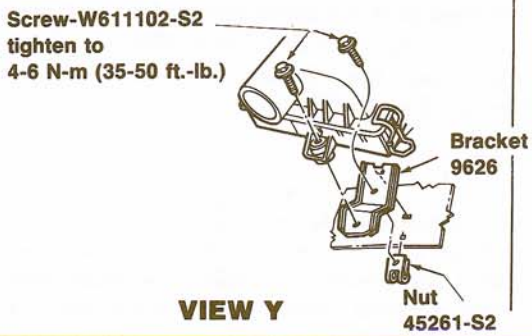

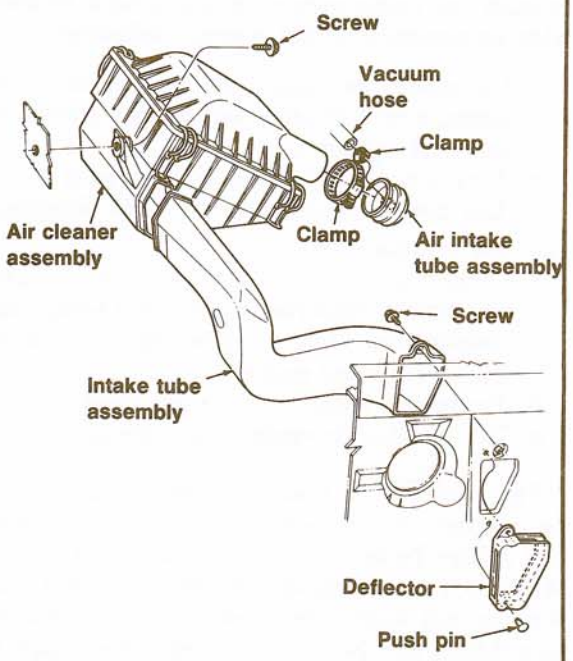

FUEL QUALITY

Gasoline

Gasoline blended with alcohol is widely available, although it is not legally required to be labeled as such in many states. A mixture of 10% ethyl alcohol and 90% unleaded gasoline is called gasohol.

Fuels with an alcohol content tend to absorb moisture from the air. When the moisture content of the fuel reaches approximately one percent, it combines with the alcohol and separates from the fuel. This water-alcohol mixture settles at the bottom of the fuel tank where the fuel pickup carries it into the fuel line to the carburetor or fuel injectors.

The greatest problem with gasohol is its cleaning effect on service station storage tanks, as well as the vehicle's fuel tank. As a result of this cleaning action, a combination of rust, a jelly-like sludge and metallic particles pass into the automotive fuel system. These substances cause reduced fuel flow through the filter and will eventually plug the carburetor or injector passageways.

Some methods of blending alcohol with gasoline now make use of "cosolvents" as a suspension agent to prevent the water-alcohol from separating from the gasoline. Regardless of the method used, however, alcohol mixed with gasoline in any manner can cause numerous and serious problems with an automotive fuel system, including:

a. Corrosion formation on the inside of fuel tanks, steel fuel lines, fuel pumps, carburetors and fuel injectors.
b. Deterioration of the plastic liner used in some fuel tanks, resulting in eventual plugging of the in-tank filter.
c. Deterioration and failure of synthetic rubber or plastic materials such as O-ring seals, diaphragms, inlet needle tips, accelerator pump cups and gaskets.
d. Premature failure of fuel line hoses.
e. Hot weather driveability problems.

The problem of gasoline blended with alcohol has become so prevalent around the United States that Miller Tools (32615 Park Lane, Garden City, MI 48135) and Kent-Moore (28635 Mound Road, Warren, MI 48092) now offer Alcohol Detection Kits (Miller part No. C-4846; Kent-Moore part No. J-34353) so that owners can determine the quality of fuel being used.

The detection procedure is performed with water as a reacting agent. However, if cosolvents have been used as a suspension agent in alcohol blending, the test will not show the presence of alcohol unless ethyene glycol (automotive antifreeze) is used instead of water as a reacting agent. It is suggested that a gasoline sample be tested twice using the detection kit: first with water and then with ethylene glycol (automotive antifreeze).

The procedure cannot differentiate between types of alcohol (ethanol, methanol, etc.) nor is it considered to be absolutely accurate from a scientific standpoint, but it is accurate enough to determine whether or not there is enough alcohol in the fuel to cause the user to take precautions. Maintaining a close watch on the quality of fuel used can save hundreds of dollars in engine and fuel system repairs.

Diesel Fuel

Use only No. 2 diesel fuel when the ambient temperature is above 20° F. Use only winterized No. 2 diesel or No. 1 diesel fuel when the temperature is below 20° F. Never use any other diesel fuels and/or fuel additives.

Do not use ether or similar starting fluids in the diesel engine. The glow plugs may ignite the fluid and cause serious engine damage or personal injury.

Do not use diesel fuel which has been stored in a galvanized container. The zinc in the metal plating will be dissolved by the fuel and can cause serious damage if it gets into the injection pump or nozzles.

CARTER YFA/YFA-FB CARBURETOR (4-CYLINDER)

The Carter YFA one-barrel carburetor (**Figure 13**) is used on all 1983-1986 carburetted vehicles (except high-altitude applications) first sold outside California. All other 1983-1986 carburetted vehicles use the Carter YFA-FB (feedback) carburetor (**Figure 14**).

NOTE

Tampering with the carburetor is a violation of Federal law. Choke, idle mixture and other sealed adjustments can legally be made only under specified circumstances. Adjustment of these systems should be left to a Ford dealer.

13

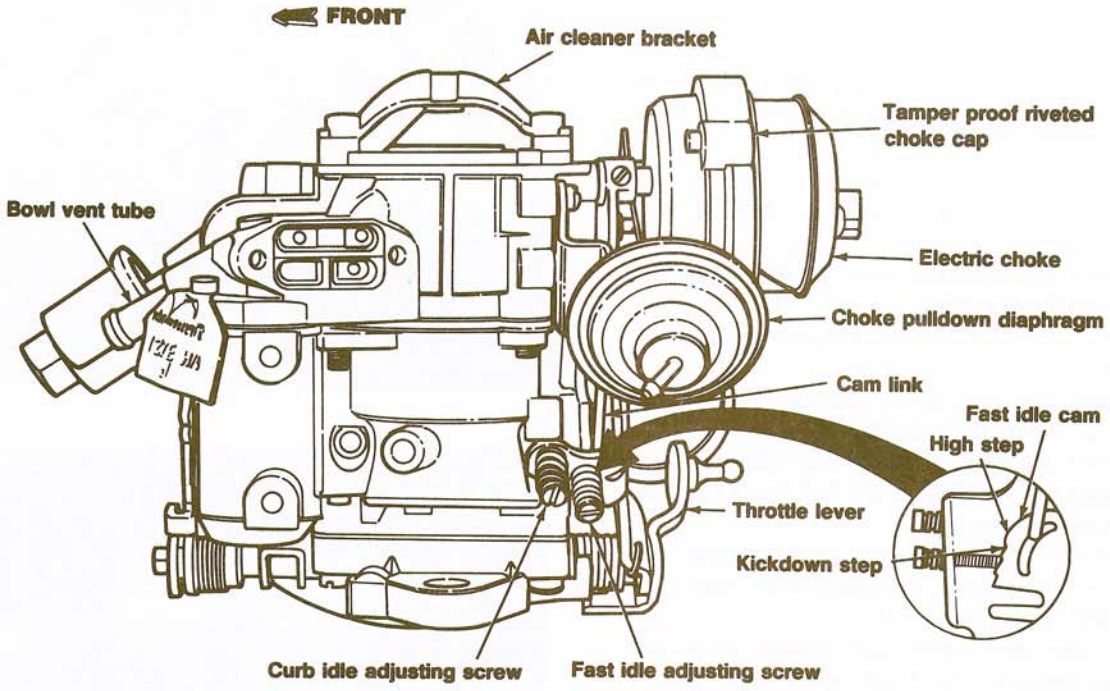
FRONT
Air cleaner bracket
Tamper proof riveted choke cap
Bowl vent tube
Electric choke
Choke pulldown diaphragm
Cam link
Fast idle cam
High step
Throttle lever
Kickdown step
Curb idle adjusting screw
Fast idle adjusting screw

14

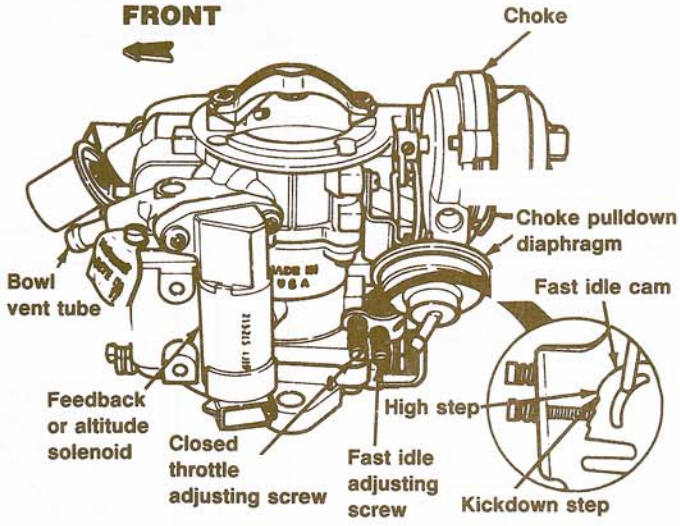
FRONT
Choke
Choke pulldown diaphragm
Bowl vent tube
Fast idle cam
Feedback or altitude solenoid
Closed throttle adjusting screw
High step
Fast idle adjusting screw
Kickdown step

Removal/Installation

Ford tool part No. T74P-9510-A is required to remove and install the 2 carburetor attaching nuts. If the special tool is not available, remove the intake manifold (with carburetor attached) as described in Chapter Four, then separate the carburetor from the manifold.

1. Disconnect the negative battery cable.
2. Remove the air cleaner as described in this chapter.
3. Disconnect the throttle cable or rod from the throttle lever (**Figure 15**).
4. Disconnect the distributor vacuum purge port vacuum line.
5. Disconnect the fuel bowl vent hose from the carburetor air horn, if so equipped.
6. Disconnect the electric choke wire (**Figure 16**).
7. Disconnect the fuel line at the fuel filter. Cap the line to prevent leakage.
8. Remove the 2 hex flange nuts holding the carburetor to the intake manifold with tool part No. T74P-9510-A (**Figure 17**).
9. Remove the carburetor and gasket. It is not necessary to remove the EGR spacer and gasket unless the intake manifold is being removed or service to the EGR system is required. See **Figure 18**.
10. Installation is the reverse of removal. Tighten the 2 hex flange nuts in several stages to prevent warpage. Tighten to 14-25 ft.-lb. (19-34 N•m).

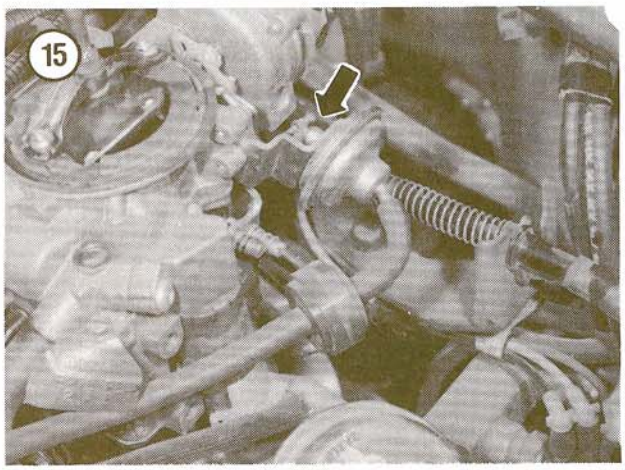

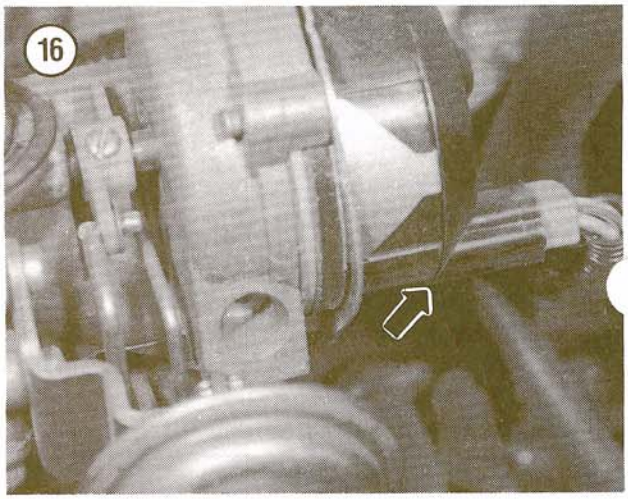

Identification

A carburetor identification tag (**Figure 19**) is attached to the carburetor by one of the air horn screws. The basic part number is 9510. To obtain the correct carburetor overhaul kit and/or replacement parts, the part number prefix, suffix and design change information must be used. Write down all information on the identification tag and give it to the parts department of a Ford dealer or any auto parts store.

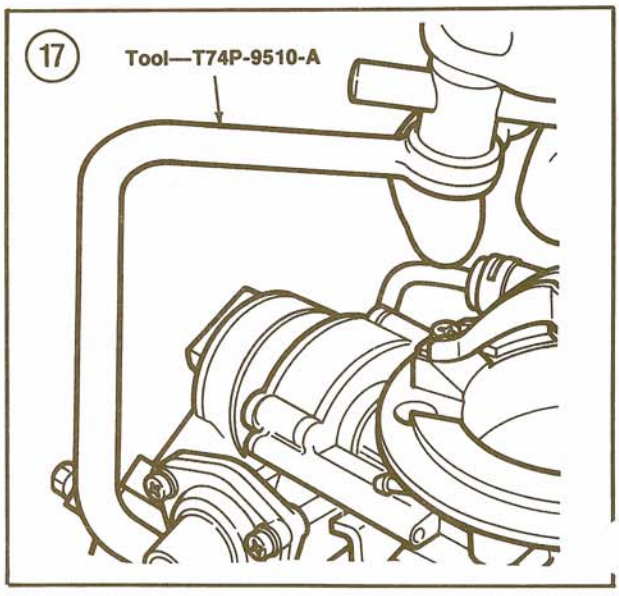

Disassembly

Refer to **Figure 20** for the YFA carburetor and **Figure 21** for the YFA-FB carburetor as required for this procedure. Not all YFA/YFA-FB carburetors will use all the parts shown in **Figure 20** or **Figure 21**.

1. Use carburetor legs to prevent throttle plate damage while working on the carburetor. If legs are

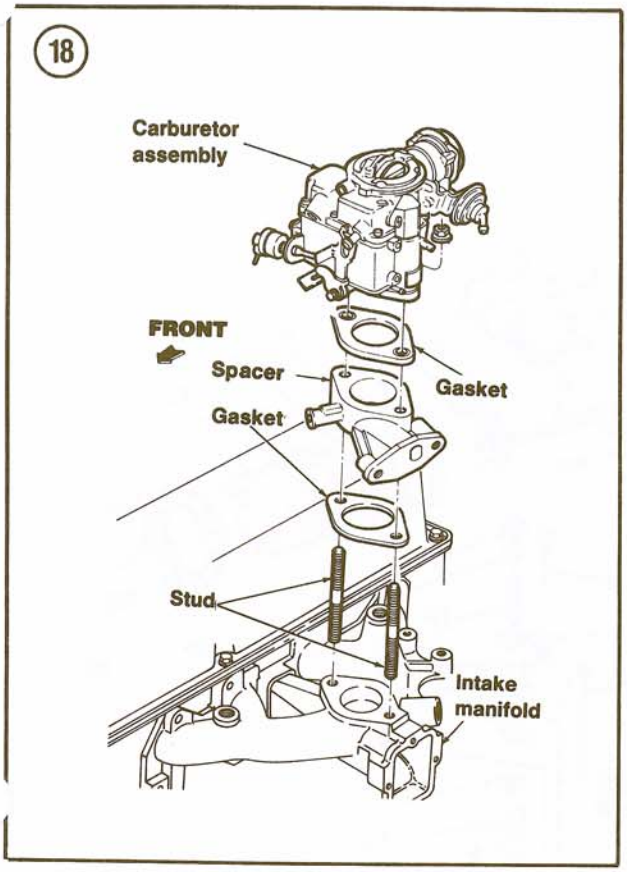

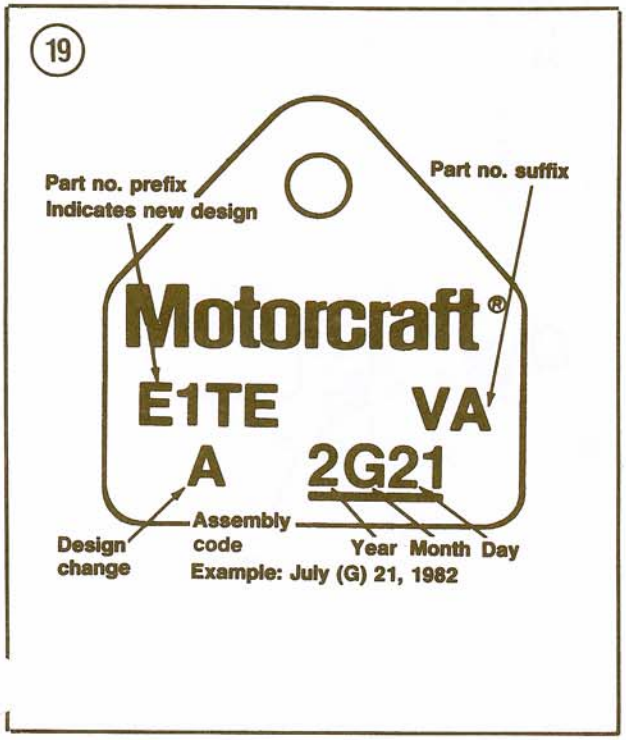

not available, thread a nut on each of two 2 1/4 in. bolts. Install each bolt in a flange hole and thread another nut on the bolt. This will hold the bolt securely to the carburetor and serve the same purpose as legs.

2. Remove the fuel filter from the air horn fuel inlet.

3. Remove the solevac or throttle kicker, the EGR WOT (wide open throttle) dump valve and bracket (if so equipped) and any other solenoid/bracket assemblies.

4. Remove the fast idle cam link retaining clip. Disconnect the link from the choke plate. Twist link to remove from fast idle cam slot. Remove link.

5. On YFA-FB carburetors, grind the head off the 2 rivets holding the pulldown diaphragm adjustment limiting shield and remove the shield. Disconnect the pulldown link and disengage from the choke shaft lever. Remove the pulldown motor.

6. On YFA-FB carburetors, remove the feedback solenoid and gasket.

7. Remove the air horn attaching screws. Remove the air horn and gasket.

8. Invert the air horn and remove the float pin, float and lever assembly.

9. Turn the air horn over and catch the fuel inlet needle pin, spring and needle.

10. Remove the fuel inlet needle seat and gasket.

11. Remove the mechanical fuel bowl vent flapper valve spring retainer. Remove the vent shaft rod, spring and flapper valve. Note position of torsion spring ends on vent rod for proper installation.

12. Invert main body casting and catch the accelerating pump check ball and weight (**Figure 22**).

13. Remove the screw which holds the fuel bowl lever to the throttle shaft. Remove the operating lever spring washer, vent rod, actuating lever and E-clip.

14. Loosen the 3/32 in. Allen setscrew on the throttle shaft arm and remove the arm and pump connector link (**Figure 23**).

15. Remove the fast idle cam and shoulder screw.

16. Remove the accelerating pump diaphragm housing screws. Lift out the pump diaphragm assembly, pump lifter link and metering rod as a unit. Remove the lifter link seal. See **Figure 24**.

17. Disconnect the metering rod arm spring from the metering rod. Remove the rod from the rod arm assembly. Note location of any washers shimming either spring. Compress upper pump

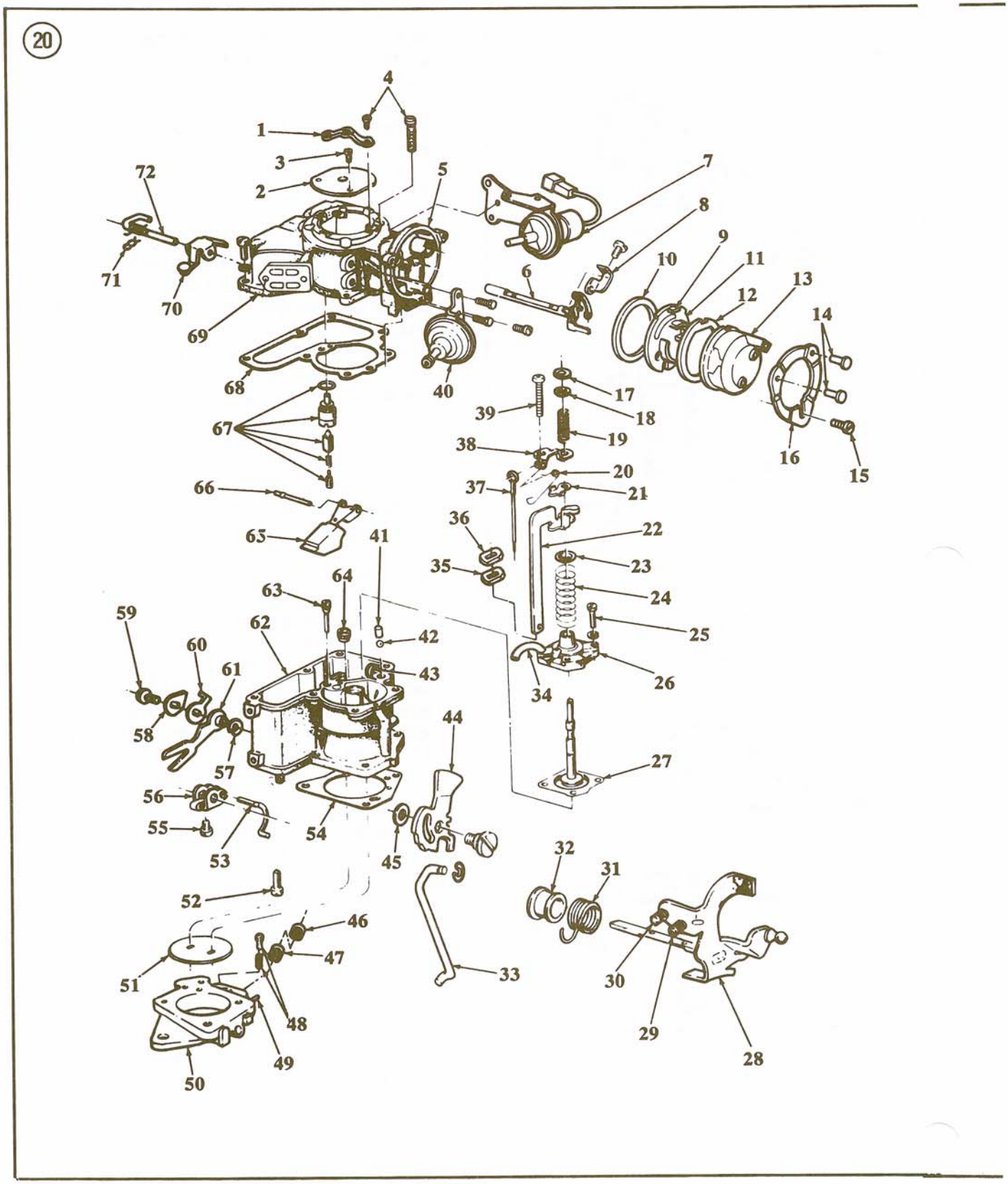
20
1
2
3
4
5
6
7
8
9
10
11
12
13
14
15
16
17
18
19
20
21
22
23
24
25
26
27
28
29
30
31
32
33
34
35
36
37
38
39
40
41
42
43
44
45
46
47
48
49
50
51
52
53
54
55
56
57
58
59
60
61
62
63
64
65
66
67
68
69
70
71
72

YFA CARBURETOR

1. Air cleaner bail
2. Choke plate
3. Screw
4. Screws
5. Air horn
6. Choke piston lever and shaft assembly
7. Solevac and bracket
8. Fast idle choke lever
9. Indexing notch
10. Gasket
11. Locking and indexing plate
12. Gasket
13. Choke cup
14. Rivets
15. Screw
16. Retainer
17. Upper pump spring retainer
18. Spring clip
19. Upper pump spring
20. Metering rod arm spring
21. Anti-rock plate
22. Pump and wot enrichment lifter link
23. Pump diaphragm spring retainer
24. Pump diaphragm spring
25. Diaphragm housing attaching screw
26. Pump diaphragm housing assembly
27. Pump diaphragm assembly
28. Throttle shaft and lever assembly
29. Fast idle adjusting screw
30. Anti-diesel throttle set screw
31. Spring
32. Bushing
33. Fast idle cam link
34. Transfer tube
35. Lifter link seal
36. Seal
37. Metering rod
38. Metering rod arm assembly
39. Metering rod adjusting screw
40. Choke pulldown diaphragm
41. Pump check weight
42. Pump check ball
43. Temperature compensated pump
44. Fast idle cam
45. Washer
46. Cap
47. Cup
48. Idle fuel mixture adjusting screw and spring
49. Spark port
50. Aluminum throttle body flange assembly
51. Throttle plate
52. Body flange attaching screw
53. Pump connector link
54. Body flange gasket
55. Screw
56. Throttle shaft arm
57. Clip
58. Washer
59. Retainer screw
60. Actuating lever
61. Operating lever
62. Main body casting
63. Low speed jet
64. Metering rod jet
65. Float and lever assembly
66. Float pin
67. Needle pin spring, seat and gasket assembly
68. Air horn gasket
69. Air horn assembly
70. Flapper valve
71. Clip
72. Vent rod and spring

(21)

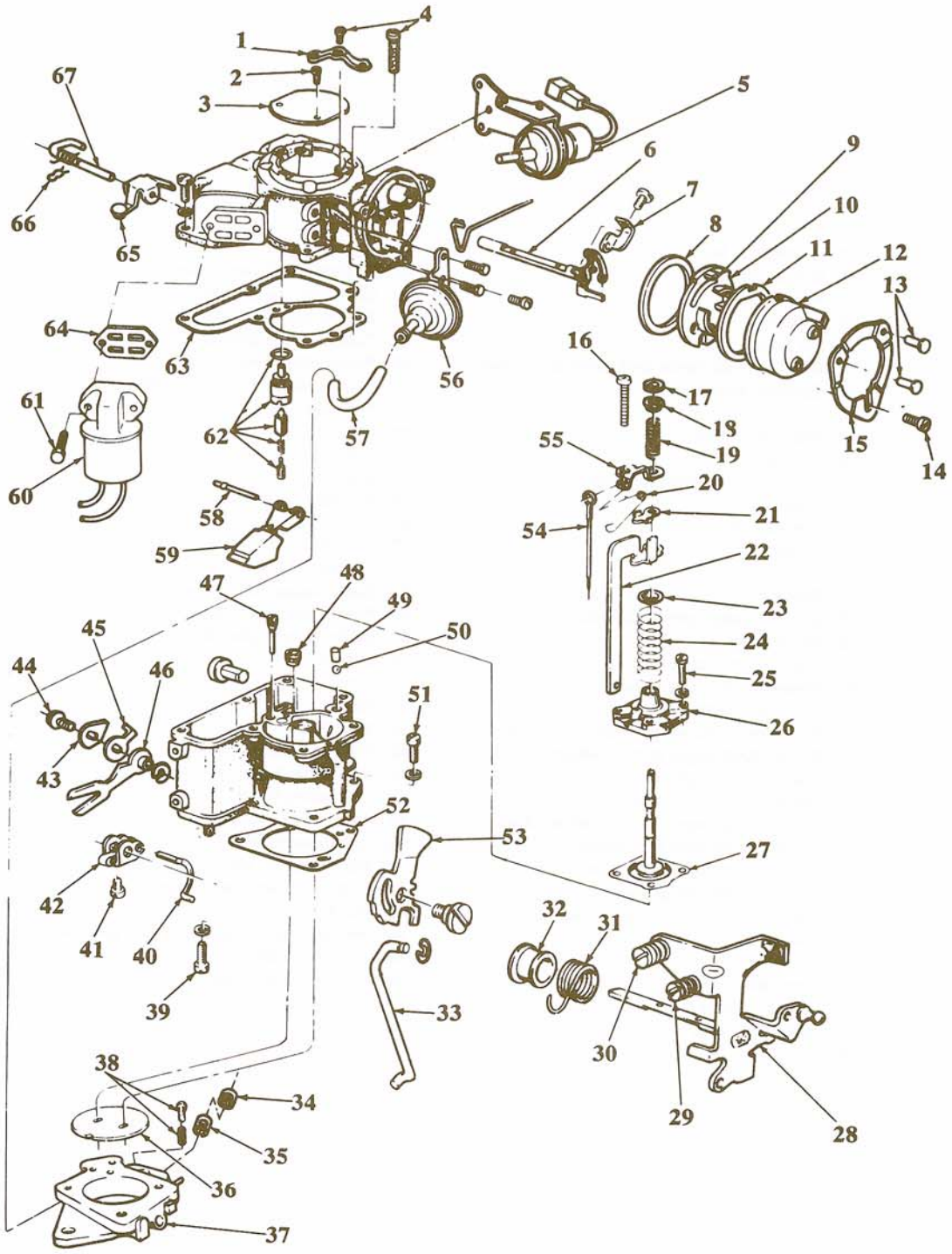
1
2
3
4
5
6
7
8
9
10
11
12
13
14
15
16
17
18
19
20
21
22
23
24
25
26
27
28
29
30
31
32
33
34
35
36
37
38
39
40
41
42
43
44
45
46
47
48
49
50
51
52
53
54
55
56
57
58
59
60
61
62
63
64
65
66
67

YFA-FB CARBURETOR

1. Air cleaner bail
2. Screw
3. Choke plate
4. Screws
5. Solevac and bracket
6. Choke piston lever and shaft assembly
7. Fast idle choke lever
8. Gasket
9. Indexing notch
10. Locking and indexing plate
11. Gasket
12. Choke cup
13. Rivets
14. Screw
15. Retainer
16. Metering rod adjusting screw
17. Upper pump spring retainer
18. Spring cup
19. Upper pump spring
20. Metering rod arm spring
21. Anti-rock plate
22. Pump and wot enrichment lifter link
23. Pump diaphragm spring retainer
24. Pump diaphragm spring
25. Diaphragm housing attaching screw
26. Pump diaphragm housing assembly
27. Pump diaphragm assembly
28. Throttle shaft and lever assembly
29. Fast idle adjusting screw
30. Anti-diesel closed throttle
31. Spring
32. Bushing
33. Fast idle cam link
34. Tamper proof cap
35. Tamper proof cap
36. Throttle plate
37. Aluminum throttle body flange assembly
38. Idle adjusting screw and spring
39. Body flange attaching screw
40. Pump connector link
41. Screw
42. Throttle shaft arm
43. Washer
44. Retainer screw
45. Actuating lever
46. Operating lever
47. Low speed jet
48. Metering rod jet
49. Pump check weight
50. Pump check ball
51. Body flange attaching screw
52. Body flange gasket
53. Fast idle cam
54. Metering rod
55. Metering rod arm assembly
56. Choke pulldown diaphragm
57. Hose
58. Float pin
59. Float and lever assembly
60. Feedback solenoid
61. Screw
62. Needle pin spring, seat and gasket assembly
63. Air horn gasket
64. Feedback solenoid gasket
65. Flapper valve
66. Clip
67. Vent rod and spring

22

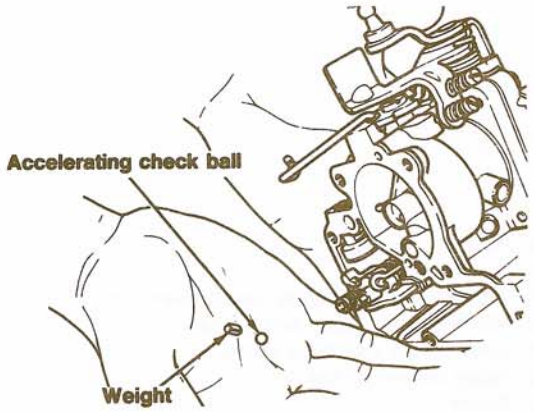
Accelerating check ball
Weight

23

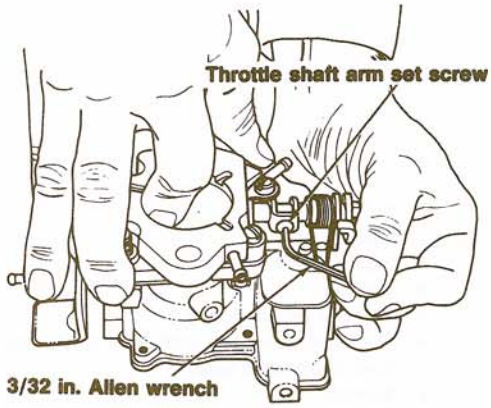
Throttle shaft arm set screw
3/32 in. Allen wrench

24

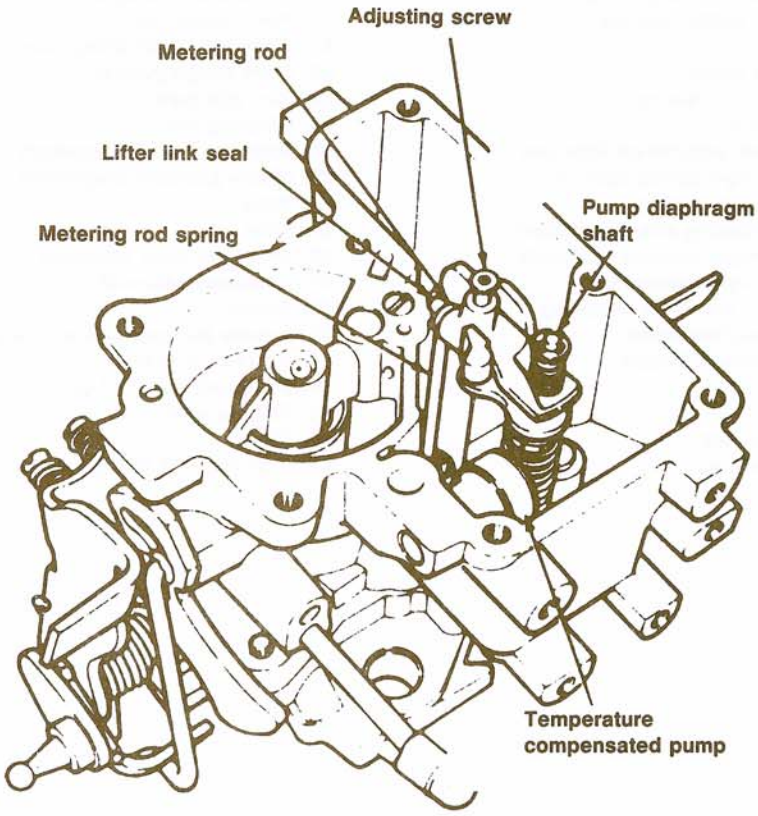
Adjusting screw
Metering rod
Lifter link seal
Metering rod spring
Pump diaphragm shaft
Temperature compensated pump

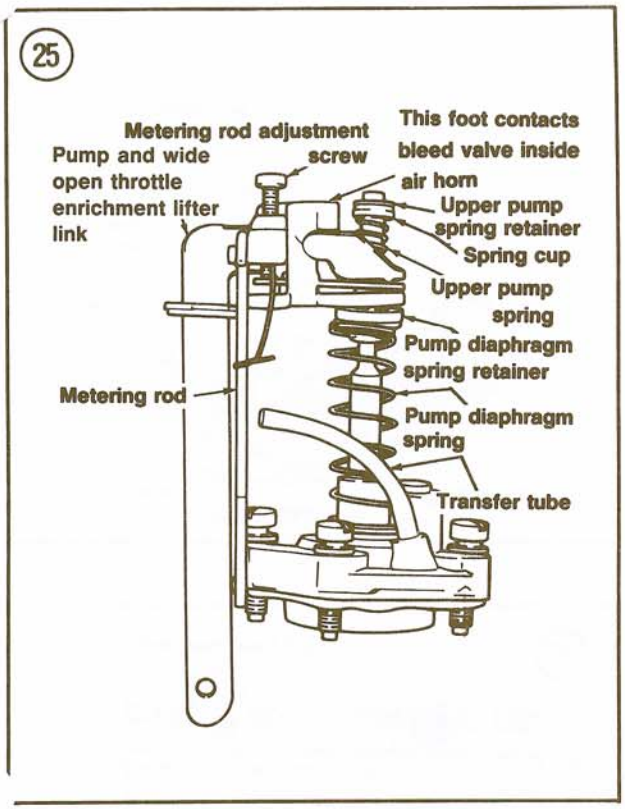

link from diaphragm shaft spring and remove spring retainer cup. Remove upper spring, rod arm assembly and pump lifter link from pump diaphragm shaft. Compress pump diaphragm spring and remove spring retainer, spring and pump diaphragm assembly from pump diaphragm housing assembly. See **Figure 25**.

18. Remove the temperature-compensated accelerator pump bleed valve plug from the outside of the main body casting with an awl or sharp punch. Loosen the bleed valve screw and remove the valve.

19. Use a jet tool or wide-blade screwdriver to remove the low speed jet.

NOTE

Access space around the main metering jet is very limited. To prevent possible damage to the jet, it should be removed only if a new jet will be installed.

20. Invert the main body assembly and remove the screws holding the throttle body to the main body. Separate the main body and throttle body. Remove and discard the body flange gasket.

Inspection and Cleaning

All parts provided in the carburetor overhaul kit (except the idle mixture needle) should be installed when overhauling the carburetor.

1. Check the choke and throttle plate shafts for grooving or wear. Make sure the choke and throttle plates can open and close freely.

NOTE

The choke and throttle plates are positioned during production and should not be removed unless damaged.

2. Clean all gasket residue from the air horn, main body and throttle body sealing surfaces with a putty knife. Work carefully to prevent casting damage.

NOTE

Some gasolines contain additives that will affect the Viton tip of the fuel inlet needle. If carburetor problems develop which are traced to a deteriorated inlet needle tip, change brands of gasoline.

3. Check the Viton tip of the fuel inlet needle for swelling or distortion. Discard the needle if overhauling the carburetor, as the overhaul kit contains a new needle assembly.

CAUTION

Do not immerse the air horn in any cleaner or solvent. This can damage the vent shaft seal and the sealed thermostatic choke assembly.

4. Clean the main body and throttle body assemblies in a cold-immersion type carburetor cleaner. Clean the air horn assembly carefully with a brush dipped in solvent. Be sure to keep the solvent away from the vent shaft seal and thermostatic choke assembly.

CAUTION

Do not immerse any solenoid, dashpot, throttle kicker or other assist device in carburetor cleaner, as this will damage them.

5. Clean all solenoids and other assist devices with a cloth lightly moistened in solvent, then wipe dry with a clean cloth.

Assembly

Assembly is the reverse of disassembly. All parts should fit together easily without forcing. Refer to

Figure 20 or **Figure 21** as necessary. If the main metering jet is replaced, coat the threads of the new jet with one drop of Loctite 262 or equivalent before installing it in the main body, then tighten to 30 in.-lb. (3.39 N•m). Install the temperature compensated pump bleed valve welch plug in the main body with a 1/4 in. flat drift punch. Tighten air horn screws to 27-37 in.-lb. (3-4 N•m).

Float Level Adjustment

1. Invert the air horn and hold at eye level to check the clearance from the indentation on the top of the float to the base of the air horn casting as shown in **Figure 26**. Use the float gauge included with the overhaul kit.

NOTE

If checking float level without rebuilding the carburetor, a piece of stiff cardboard 0.780 in. wide will serve as a float gauge.

2. The float arm should rest on the fuel inlet needle pin at the correct clearance. If it does not, bend the float arm as necessary to adjust the float to the correct level.

NOTE

Do not load the inlet needle when adjusting the float. Do not bend the tab at the end of the float lever.

Mechanical Fuel Bowl Vent Adjustment

1. Connect a tachometer to the engine according to manufacturer's instructions.
2. Start the engine and warm to normal operating temperature (upper radiator hose hot).
3. Check idle speed and compare to Vehicle Emission Control Information (VECI) decal under the hood. Adjust idle speed if necessary.
4. Open the throttle lever so that its actuating lever does not touch the fuel bowl vent rod. See **Figure 27**.
5. Close the throttle lever to the idle set position. Measure the fuel bowl vent rod travel at point A, **Figure 27**. It should be 0.100-0.150 in. (2.54-3.81 mm).
6. If adjustment is necessary, bend the throttle actuating lever at the notch shown in **Figure 27**.

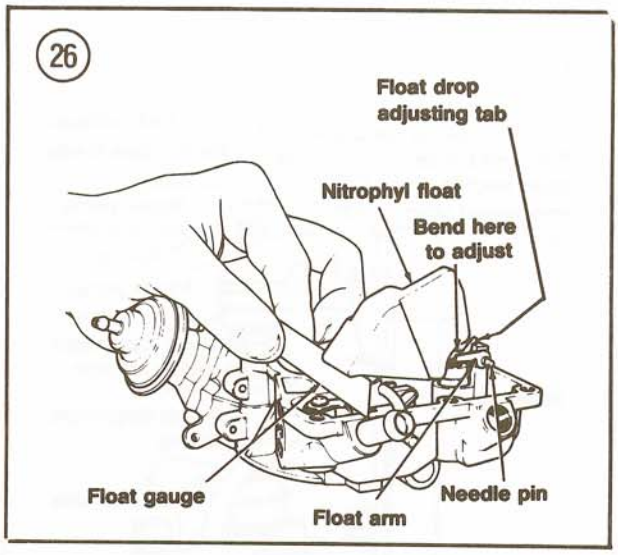

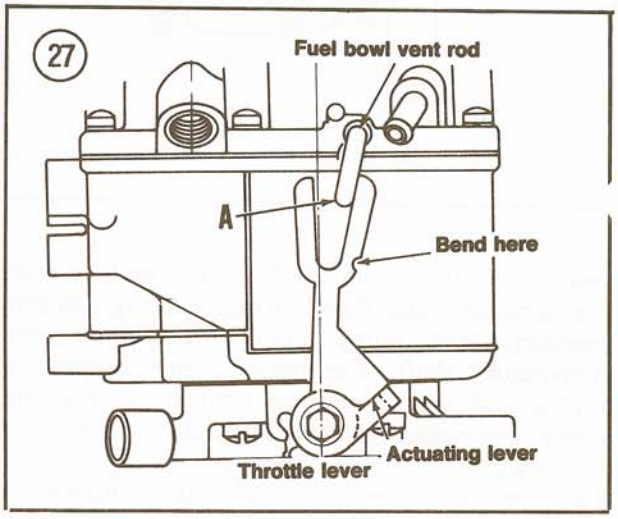

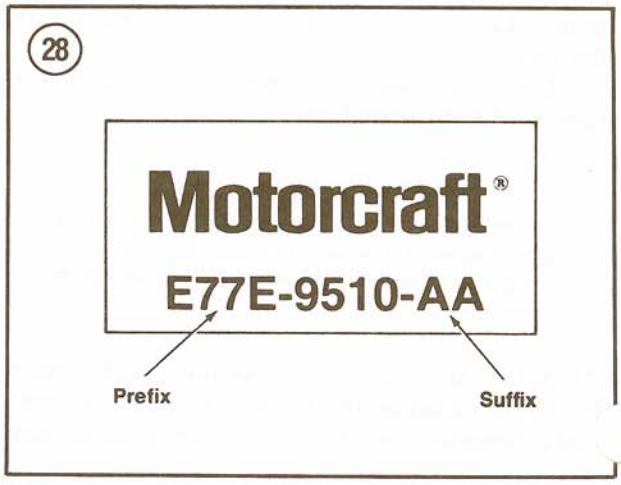

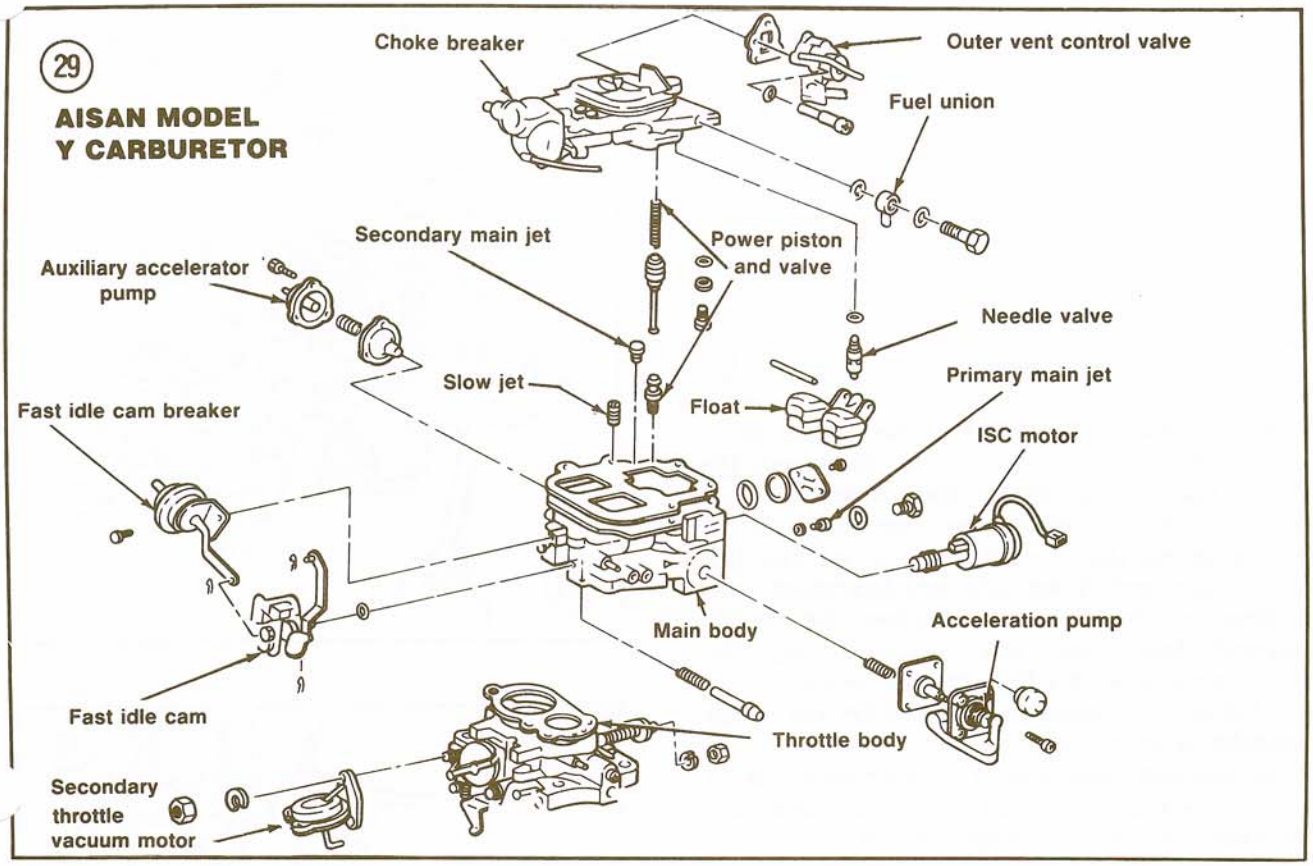

AISAN CARBURETOR (4-CYLINDER)

The Aisan Model Y is a staged 2-barrel carburetor used on 1987 2.0L engines. An idle speed control (ISC) motor operated by a stand-alone electronic module controls curb idle speed and anti-dieseling shutdown. It also prepositions the throttle for the next start-up and acts as a dashpot.

Removal/Installation

1. Disconnect the negative battery cable.
2. Remove the air cleaner as described in this chapter.
3. Disconnect the fuel line at the fuel filter. Cap the line to prevent leakage.
4. Label and disconnect all vacuum lines and electrical connectors from the carburetor.
5. Disconnect the throttle cable or rod from the throttle lever.
6. Remove the 4 flange nuts holding the carburetor to the intake manifold.
7. Remove the carburetor and gasket. Discard the gasket.
8. Installation is the reverse of removal. Tighten the 4 flange nuts to 13-14 ft.-lb. (17.7-19 N•m) in several stages to prevent warpage.

Identification

A carburetor identification tag (**Figure 28**) is attached to the carburetor by one of the air horn screws. The basic part number is 9510. To obtain the correct carburetor overhaul kit or replacement parts, the part number prefix, suffix and any design change information must be used. Write down all information on the identification tag and give it to the parts department of a Ford dealer or any auto parts store.

Disassembly

Refer to **Figure 29** for this procedure. Not all Aisan Model Y carburetors will use all the parts shown in **Figure 29**.

1. Use carburetor legs to prevent throttle plate damage while working on the carburetor. If legs are not available, thread a nut on each of four 2 1/4 in. bolts. Thread each bolt in a flange hole and thread another nut on the bolt. This will hold the bolt securely to the carburetor and serve the same purpose as legs.
2. Remove the fuel filter from the air horn fuel inlet. Unscrew and remove the inlet retaining screw. Remove the inlet fitting and 2 copper gaskets.
3. Use a small screwdriver blade to disconnect the fast idle cam breaker link at the cam. Make sure to keep the retainer for reassembly. See **Figure 30**.
4. Use the same screwdriver to disconnect the choke link at the choke shaft lever. Do not disconnect link at fast idle cam. See **Figure 31**.
5. Disconnect the vacuum hoses at the fast idle cam breaker and choke pulldown diaphragm.
6. Remove the 3 screws holding the SHED solenoid bowl vent and wire retaining clip. Remove the assembly from the carburetor.
7. Unbolt and remove the ISC bracket and motor assembly from the carburetor.
8. Loosen and remove the 5 screws holding the air horn to the main body. Separate the air horn from the main body and lift straight up and off. Remove and discard the air horn gasket.

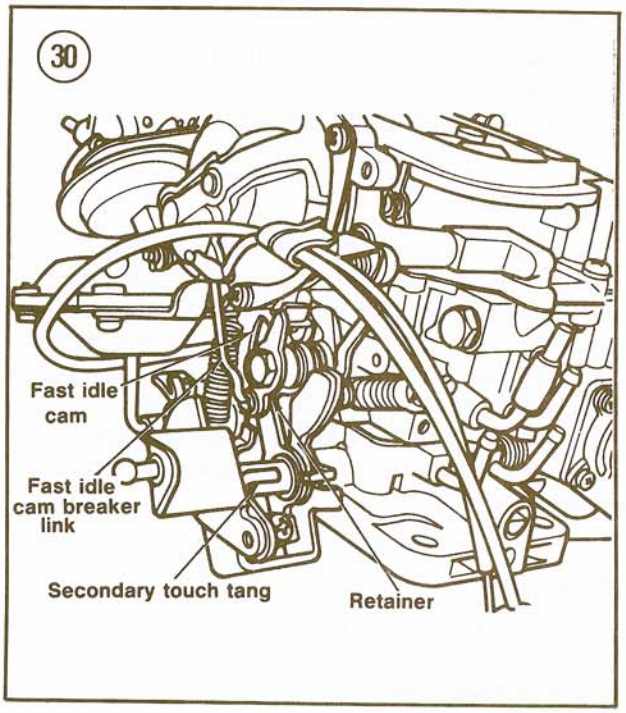

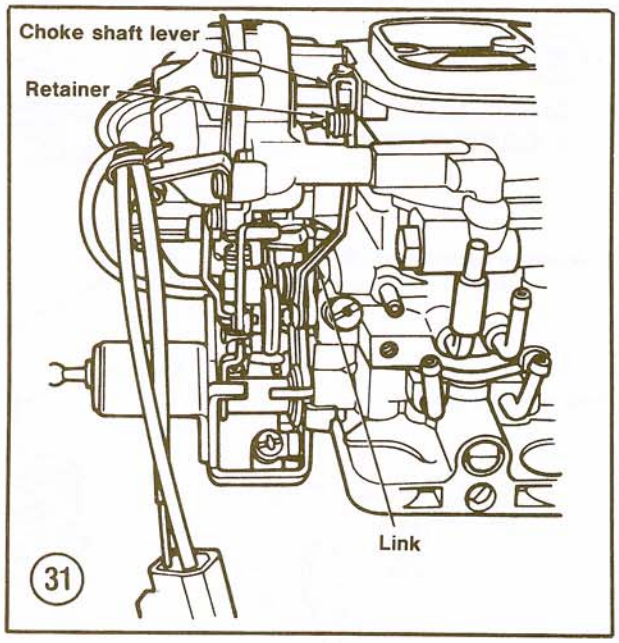

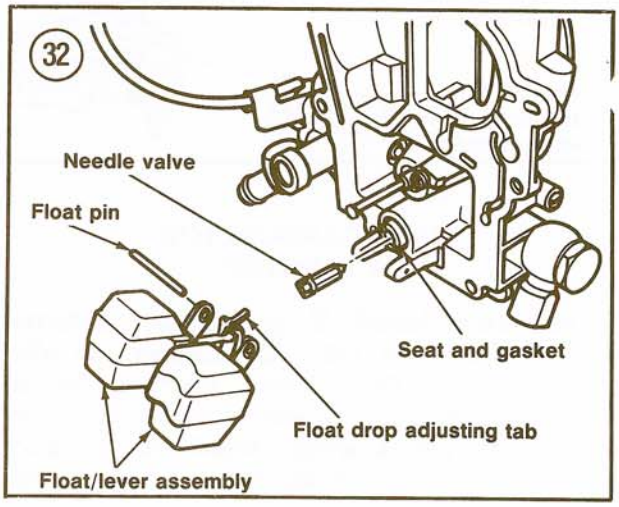

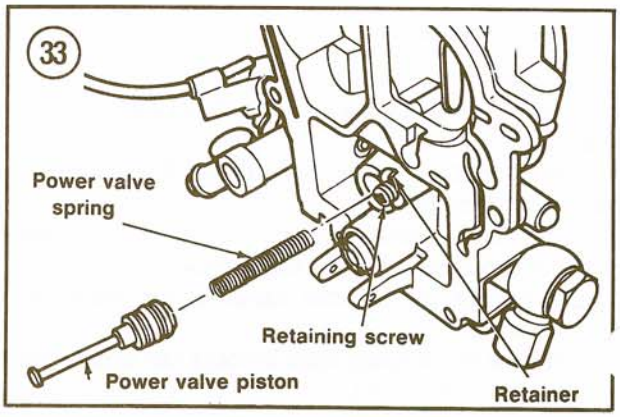

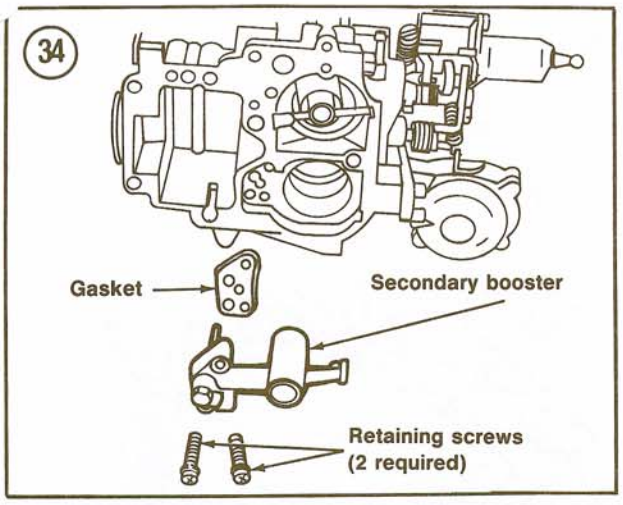

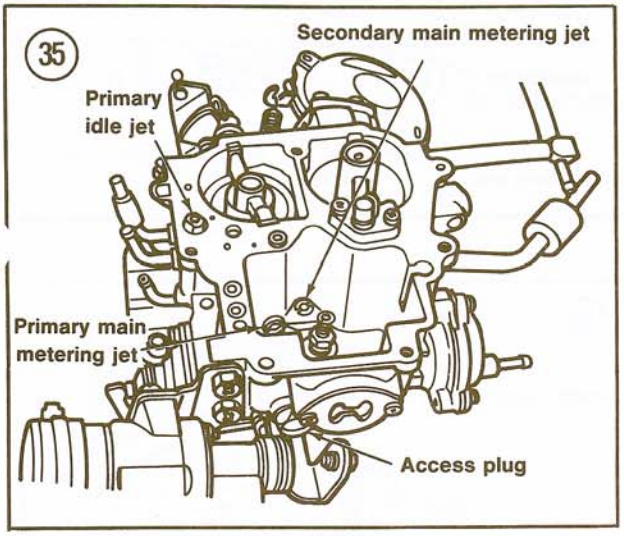

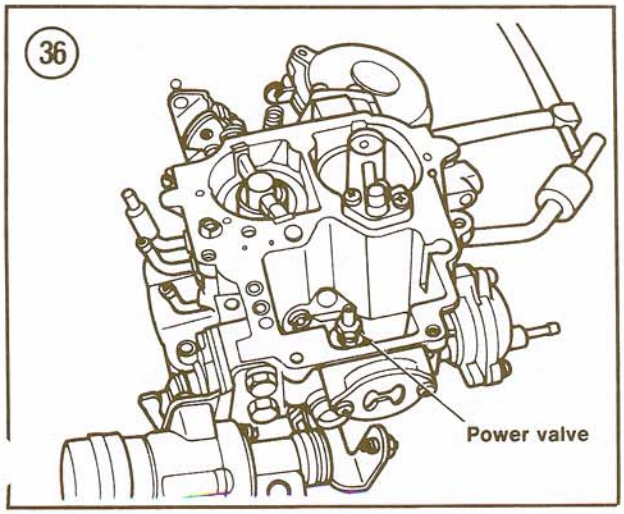

9. Invert the air horn and remove the float pin, float and lever assembly (**Figure 32**).
10. Loosen the power valve piston retainer screw. Hold the piston in place and rotate the retainer enough to free the piston. Remove the piston and spring. See **Figure 33**.
11. Remove the 2 screws holding the secondary booster assembly in the air horn. Remove the booster and gasket. Discard the gasket. See **Figure 34**.
12. Remove the primary main jet access plug from the side of the carburetor. Insert an appropriate jet remover or small screwdriver blade and remove the primary main metering jet (**Figure 35**).
13. Remove the secondary main metering and idle jets (**Figure 35**).
14. Unscrew and remove the power valve from the main body (**Figure 36**).
15. Remove the 3 screws holding the choke plate pulldown vacuum diaphragm cover in place. Remove the cover, spring, diaphragm, spacer and spring. The first stage diaphragm will remain attached to the choke lever inside the housing. See **Figure 37**.
16. Loosen the fast idle cam breaker screw and swivel the assembly to provide access to the secondary throttle vacuum motor screws. Remove the clip from the diaphragm link, then remove the screws holding the vacuum motor to the main

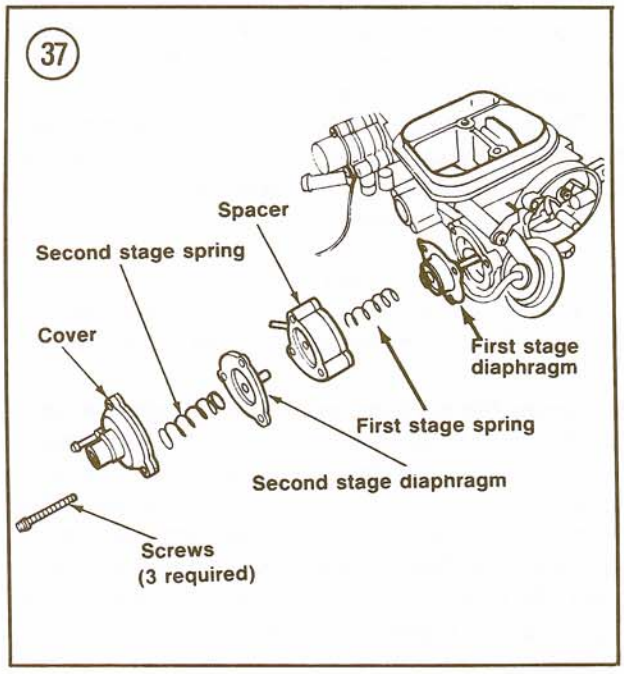

6

body. Discard the gasket but retain the spacer used with the vacuum motor link. See **Figure 38**.
17. Unbolt and remove the main accelerator pump housing, diaphragm and spring (**Figure 39**).
18. Repeat Step 17 to remove the auxiliary accelerator pump housing, diaphragm and spring (**Figure 40**).
19. Remove the 2 screws holding the sight glass cover to the side of the fuel bowl. Remove the cover, sight glass and O-ring seal. Discard the O-ring seal.
20. Invert the main body and remove the 3 screws holding it to the throttle body. Separate the 2 units and discard the gasket.
21. Inspect and clean the carburetor. See *Carter YFA/YFA-FB Carburetor, 4-cylinder* in this chapter.

Assembly

Assembly is the reverse of disassembly. All parts should fit together easily without forcing. Refer to **Figure 29** as necessary. Install new O-ring seals and gaskets. Tighten air horn to main body screws to 31-43 in.-lb. (3.4-4.9 N•m).

Float Level Adjustment

This adjustment should be made without the air horn gasket, power piston and spring in place.
1. Invert the air horn. Refer to the specifications provided with the overhaul kit and insert a drill of the specified size as shown in **Figure 41** to check the clearance between the bottom surface of the air horn and top of the float.
2. The float arm should rest on the fuel inlet needle pin at the correct clearance. If it does not, bend the float arm as necessary to adjust the float to the correct level. See **Figure 42**.

NOTE

Do not load the inlet needle when adjusting the float. Do not bend the tab at the end of the float lever.

3. Return the air horn to an upright position and let the float hang freely. Measure the maximum dimension between the casting surface and toe end of the float with vernier calipers while holding the air horn at eye level. Compare the dimension with with that specified in the overhaul kit specifications sheet. If it is not correct, bend the float drop adjusting tab (**Figure 32**) as necessary to obtain the correct dimension.

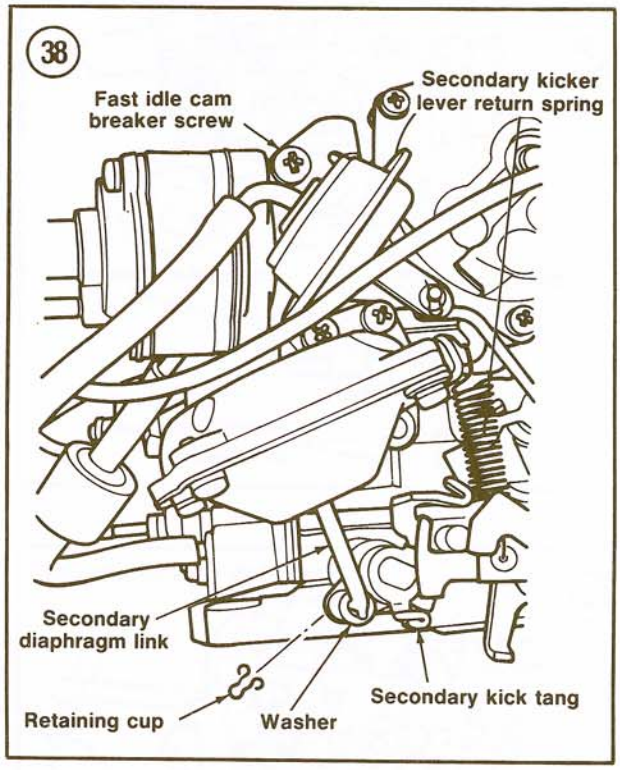

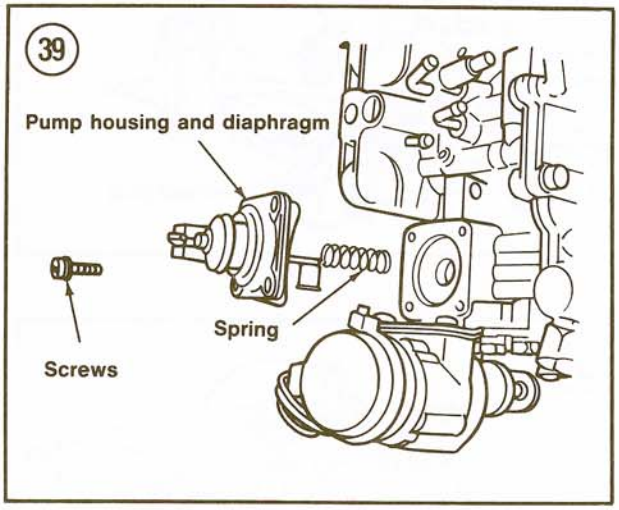

CARBURETOR (2.8L V6)

The 2.8L V6 engine is equipped with a Motorcraft 2150A feedback carburetor. Since the carburetor air-fuel ratio is determined and controlled by the EEC-IV microprocessor, no adjustments by the amateur mechanic are possible. Idle mixture is pre-set at the factory and sealed to prevent tampering; curb idle and fast idle speeds

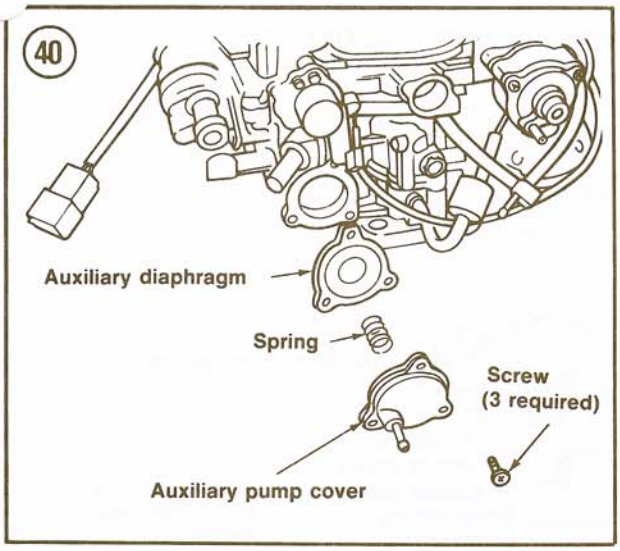

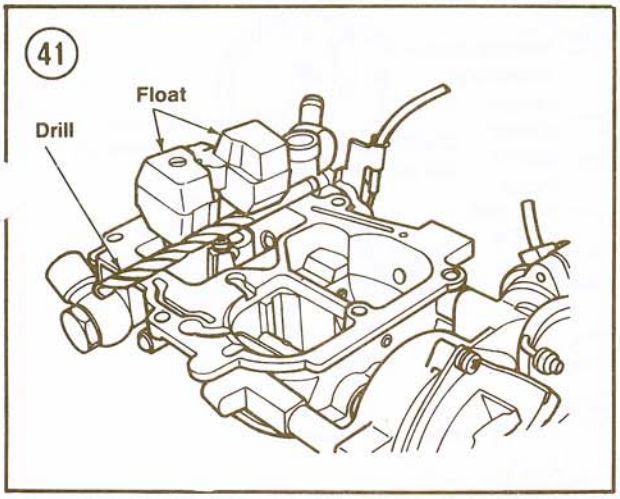

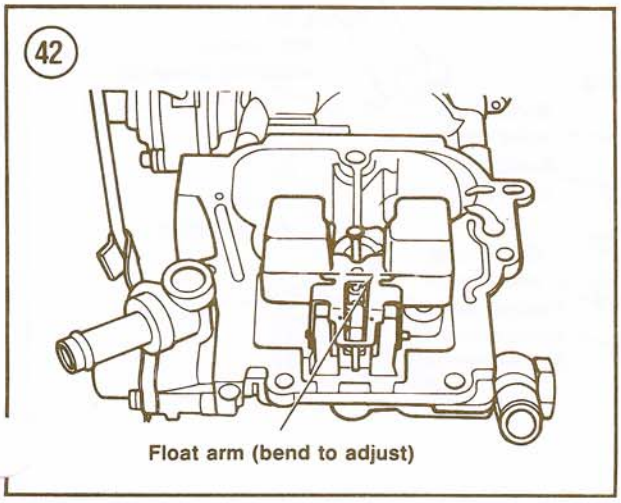

are controlled by an idle speed control motor which functions as directed by the microprocessor. Altitude compensation and choke operation are also programmed by the microprocessor.

Because it is considered a part of the emission control system and is operated by the EEC-IV microprocessor, any adjustments to the 2150A carburetor should be performed by a Ford dealership or other competent garage with the necessary special tools and test equipment.

NOTE

If a 1984 Bronco II equipped with the 2150A carburetor dies on turns and has a hot hesitation problem, check the build date. If it contains "16," replace the carburetor. These carburetors have a casting defect which prevents the elastomer valve from seating properly. It may be possible to have the carburetor replaced under the emission warranty. Check with your dealer before buying a new carburetor.

Removal/Installation

1. Disconnect the negative battery cable.
2. Remove the air cleaner as described in this chapter.
3. Disconnect the throttle cable (and automatic transmission linkage, if so equipped) from the throttle lever. See **Figure 43**.
4. Label and disconnect all vacuum lines and hoses at the carburetor.
5. Unplug all electrical connectors at the carburetor.
6. Disconnect the fuel line at the fuel filter. Cap the line to prevent leakage.

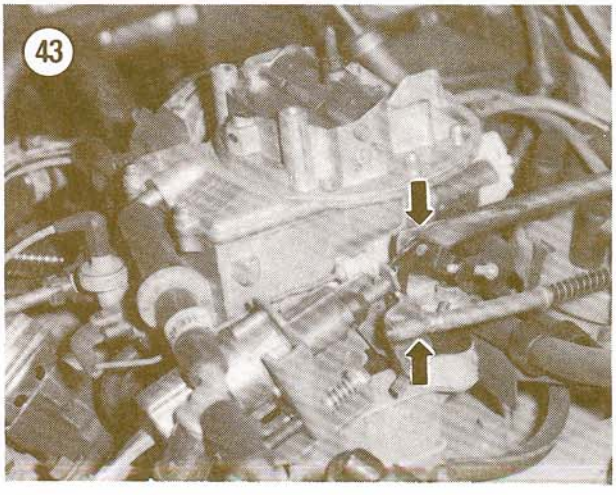

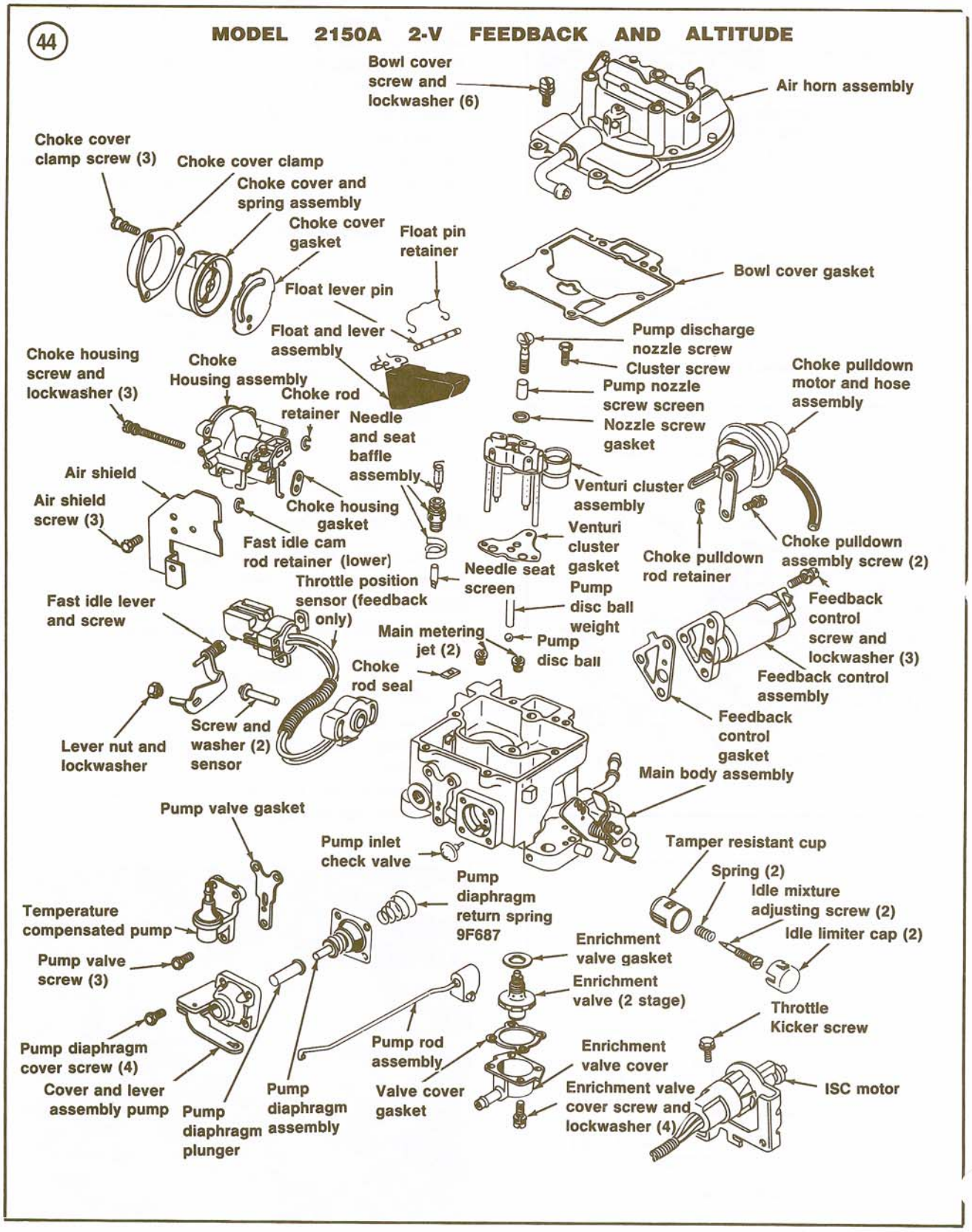
44
MODEL 2150A 2-V FEEDBACK AND ALTITUDE
Bowl cover screw and lockwasher (6)
Air horn assembly
Choke cover clamp screw (3)
Choke cover clamp
Choke cover and spring assembly
Choke cover gasket
Float pin retainer
Float lever pin
Bowl cover gasket
Float and lever assembly
Pump discharge nozzle screw
Cluster screw
Choke housing screw and lockwasher (3)
Choke Housing assembly
Choke rod retainer
Pump nozzle screw screen
Choke pulldown motor and hose assembly
Needle and seat baffle assembly
Nozzle screw gasket
Air shield
Air shield screw (3)
Venturi cluster assembly
Choke housing gasket
Fast idle cam rod retainer (lower)
Venturi cluster gasket
Choke pulldown rod retainer
Choke pulldown assembly screw (2)
Needle seat screen
Throttle position sensor (feedback only)
Pump disc ball weight
Fast idle lever and screw
Main metering jet (2)
Pump disc ball
Feedback control screw and lockwasher (3)
Choke rod seal
Feedback control assembly
Feedback control gasket
Screw and washer (2) sensor
Lever nut and lockwasher
Main body assembly
Pump valve gasket
Pump inlet check valve
Tamper resistant cup
Spring (2)
Pump diaphragm return spring 9F687
Idle mixture adjusting screw (2)
Temperature compensated pump
Idle limiter cap (2)
Enrichment valve gasket
Pump valve screw (3)
Enrichment valve (2 stage)
Throttle Kicker screw
Pump diaphragm cover screw (4)
Pump rod assembly
Enrichment valve cover
Cover and lever assembly pump
Pump diaphragm plunger
Pump diaphragm assembly
Valve cover gasket
Enrichment valve cover screw and lockwasher (4)
ISC motor

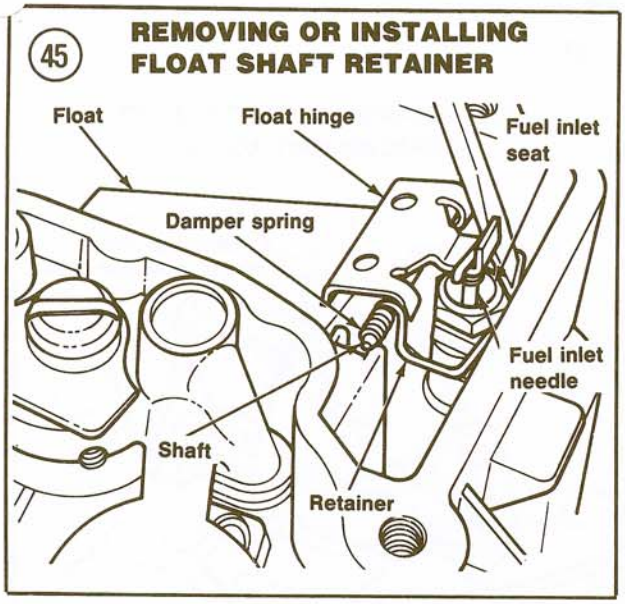

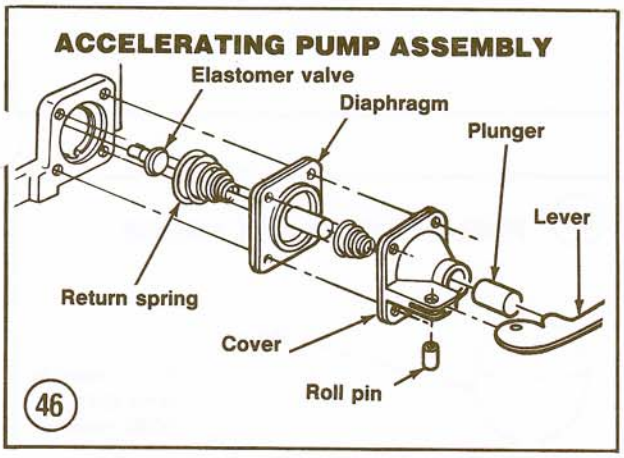

7. Remove the carburetor flange nuts. Remove the carburetor and gasket spacer (if so equipped).
8. Installation is the reverse of removal. Tighten the flange nuts to 14-16 ft.-lb. (20-21 N•m) in a criss-cross pattern to prevent warpage.

Identification

A carburetor identification tag (**Figure 28**) is attached to the carburetor by one of the air horn screws. The basic part number is 9510. To obtain the correct carburetor overhaul kit and/or replacement parts, the part number prefix, suffix and design change information must be used. Write 'own all information on the identification tag and .ve it to the parts department of a Ford dealer or any auto parts store.

Disassembly

Refer to **Figure 44** as required for this procedure. Not all 2150A carburetors will use all the parts shown in **Figure 44**.

1. Use carburetor legs to prevent throttle plate damage while working on the carburetor. If legs are not available, thread a nut on each of two 2 1/4 in. bolts. Install each bolt in a flange hole and thread another nut on the bolt. This will hold the bolt securely to the carburetor and serve the same purpose as legs.
2. Remove the air cleaner anchor screw.
3. Remove the choke pulldown rod circlip. Remove the pulldown diaphragm and bracket.
4. Remove the air horn attaching screws. Lift air horn straight up and off main body. Remove and discard the gasket.
5. Loosen the choke shaft lever screw. Remove the choke rod from the lever.
6. Remove the nylon dust shield from the choke rod under the air horn.
7. Carefully insert a thin-blade screwdriver under the float shaft retainer spring and pry it from the groove in the inlet needle valve seat. See **Figure 45**.
8. Once the float spring is free, lift float and retainer assembly from float bowl. The inlet needle is attached to the float arm by a tiny spring and should come out with the float.
9. Remove the needle valve seat, baffle and filter screen with a wide-blade screwdriver. Discard the seat gasket.
10. Remove the 2 booster venturi screws. Tap side of booster venturi gently with a screwdriver handle to break the gasket seal. Remove venturi and metering rod assembly. Discard the gasket.
11. Remove the filter screen from the venturi screws. Invert the main body and catch the pump discharge weight and check ball.
12. Remove the accelerator pump cover, diaphragm and spring (**Figure 46**). Disconnect cover from link. Remove elastomer valve from pump well and discard.
13. Disconnect the temperature-compensated pump vacuum hose. Remove the valve and gasket. Discard the gasket.
14. It is not necessary to remove the main metering jets in the float bowl for cleaning purposes. If replacement is required, remove jets with a jet remover or wide-blade screwdriver.
15. Invert main body and remove enrichment valve cover and gasket. Remove enrichment valve

with an appropriate size 8-point socket wrench (**Figure 47**). Remove and discard valve gasket.
16. Remove the idle speed control motor.
17. Remove the throttle position sensor.
18. Remove the feedback control solenoid and gasket. Discard the gasket.
19. Inspect and clean the carburetor. See *Carter YFA/YFA-FB Carburetor, 4-cylinder* in this chapter.

Assembly

Assembly is the reverse of disassembly. All parts should fit together easily without forcing. Refer to **Figure 44** as required. Coat tip of new elastometer valve with polyethylene grease (part No. D0AZ-19584-A) or equivalent. Tighten booster venturi screws to 65-85 in.-lb. (7.3-9.6 N•m). Tighten temperature-compensated pump screws to 19-24 in.-lb. (2.1-2.7 N•m). Tighten air horn screws to 27-37 in.-lb. (3-4 N•m).

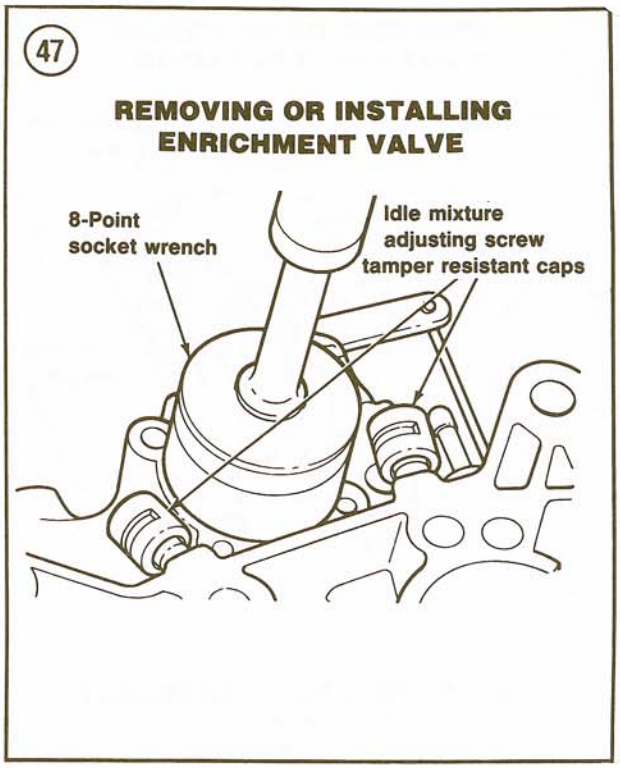

Float Level Adjustment

Float adjustment is done in 2 stages. The initial stage is a dry float adjustment. When the carburetor is reinstalled on the engine, a wet float adjustment is made, if necessary.
1. Carefully raise the float to seat the fuel inlet needle and measure the distance between the top of the main body and the top of the float. Compare to specifications provided with overhaul kit. If necessary, bend the tab on the float as required to bring the setting within specifications.
2. Reinstall the carburetor on the engine as described in this chapter.
3. Start the engine and warm to normal operating temperature.
4. With the air cleaner off, insert gauge part No. T83L-9550-A in the fuel bowl vent stack as shown in **Figure 48**.
5. Siphon fuel into the sight tube. Depress the level gauge and read the fuel level on the sight tube. If fuel level falls within specified band, no further adjustment is required.
6. If fuel level is outside specified band in Step 5, shut the engine off and remove the carburetor air horn.

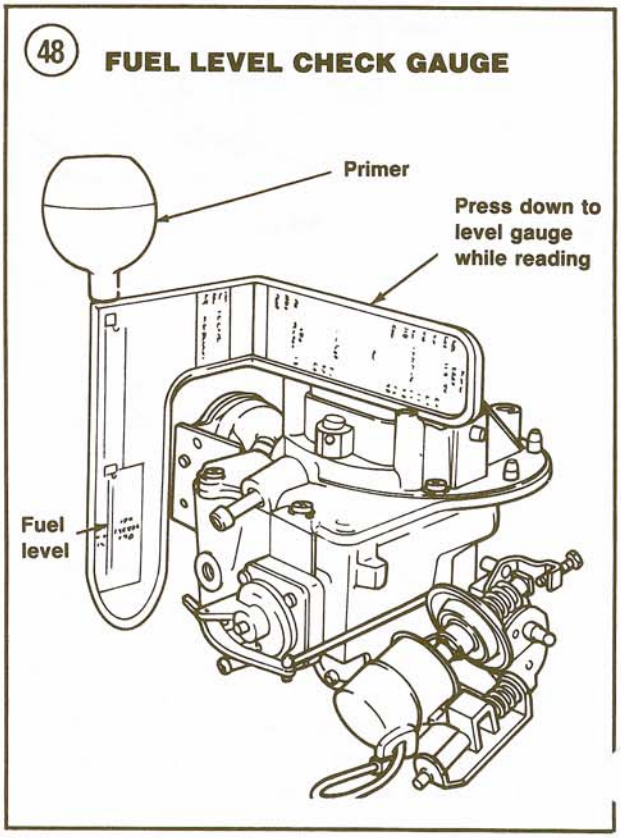

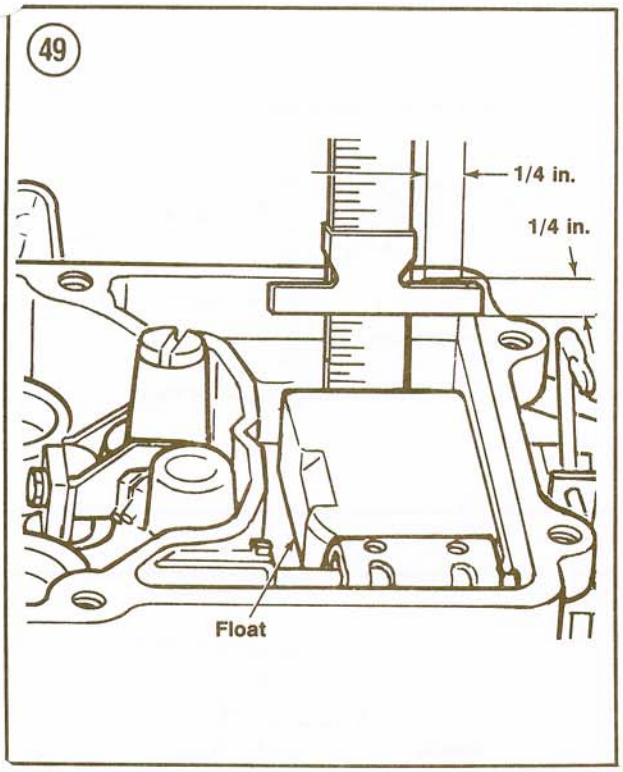

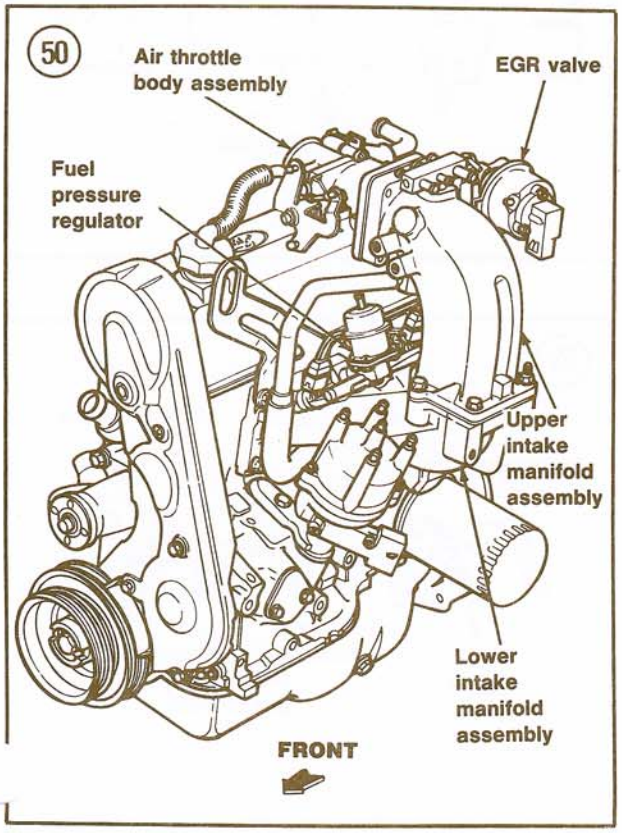

7. Measure the distance between the top surface of the main body and the top of the fuel in the fuel bowl (**Figure 49**) and compare to specifications provided with the overhaul kit.
8. Bend the float tab up (to raise) or down (to lower) as required to bring the fuel level within specifications.
9. Reinstall the air horn with 2 screws. Start the engine and repeat Step 4 and Step 5 as required. When adjustment is correct, reinstall air horn with a new gasket.

ELECTRONIC FUEL INJECTION (EFI)

A multi-point fuel injection system is used on 1985 and later 2.3L 4-cylinder and 1986 2.9L V6 engines. A fuel charging assembly (4-cylinder) or fuel supply manifold (V6) attached to the intake manifold contains an injector for each cylinder, each positioned above an intake valve. All injectors simultaneously spray a predetermined amount of fuel into the intake air stream once every crankshaft revolution. **Figure 50** shows the components of the basic 2.3L EFI fuel charging assembly; the 2.9L V6 system is similar.

Airflow to the engine is controlled by the throttle body assembly positioned between the air cleaner and the upper intake manifold. Data from the throttle position sensor mounted on the throttle body and the air bypass valve assembly mounted on the air cleaner is combined with other sensor inputs by the electronic engine control (EEC-IV) microprocessor. The microprocessor determines how much fuel is required to maintain a prescribed air-fuel ratio for proper engine operation at the time, then operates the fuel injectors.

NOTE

If a 1986 Bronco II 2.9L V6 has an intermittent hot-start problem, check for a poor connection in the microprocessor-to-injector harness.

Since the microprocessor controls the quantity and duration of fuel flow, the only adjustment on the fuel charging assembly is a minimum idle airflow screw on the air intake throttle body. Adjustment of this screw should be left to a dealer or qualified fuel specialist with the proper test equipment.

Fuel is delivered to the fuel rail by a low-pressure electric boost pump inside the fuel tank and a

high-pressure (39 psi) electric pump mounted on the frame rail (**Figure 51**).

WARNING

The fuel system will remain under pressure even though the engine is not running. Before opening any fuel lines, you must relieve the fuel system pressure as described in this chapter.

The fuel pump is controlled by the EEC-IV microprocessor through a power relay. An inertia switch connected in series with the pump power feed acts as a safety feature to shut off the fuel pump in case of a collision or rollover.

The inertia switch is located inside the cab on the toe board at the right of the transmission hump (**Figure 52**). A button is provided on the switch to reset the unit in case it is tripped.

NOTE

If the vehicle will not start and run after a minor collision or if it ran fine when you left it in the parking lot but will not start and run when you return (it may have been tapped by someone else in the parking lot), try resetting the inertia switch before summoning help.

Since the EFI system is electronically controlled, no attempt should be made to adjust the idle speed with the idle airflow screw. Owner service should be limited to replacement only. If the EFI system is not working properly, take the vehicle to a dealer for diagnosis and adjustment.

NOTE

Some gasolines may cause injector clogging problems. When used as directed, Chevron Techron additive will prevent this from happening.

Relieving System Pressure

Before opening any fuel connection on an EFI system, the fuel pressure must be relieved.

1. Disconnect the negative battery cable.
2. Remove the fuel tank filler cap to release any pressure in the tank.
3. Locate the Schrader pressure relief valve on the fuel injection manifold and remove the valve cap.

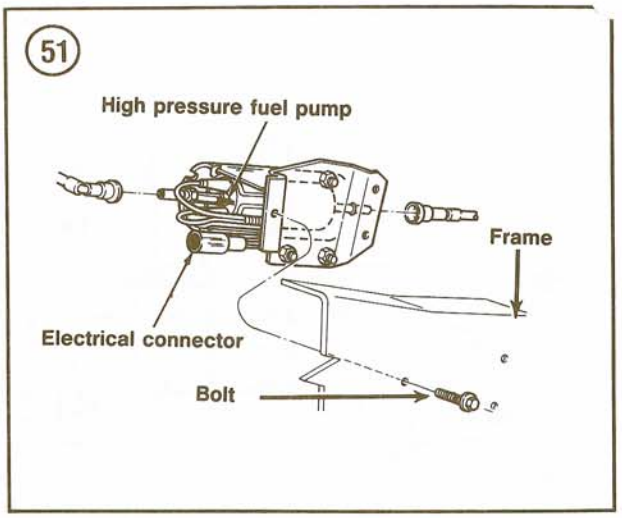

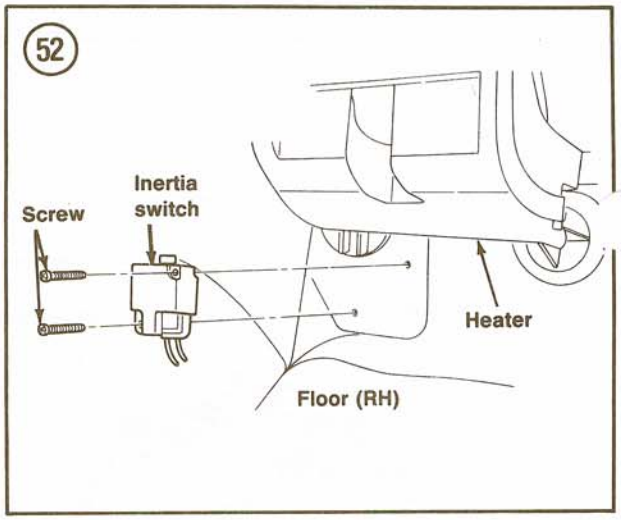

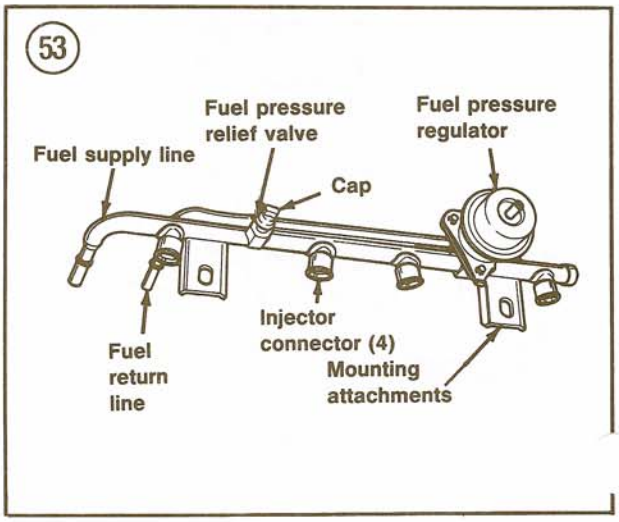

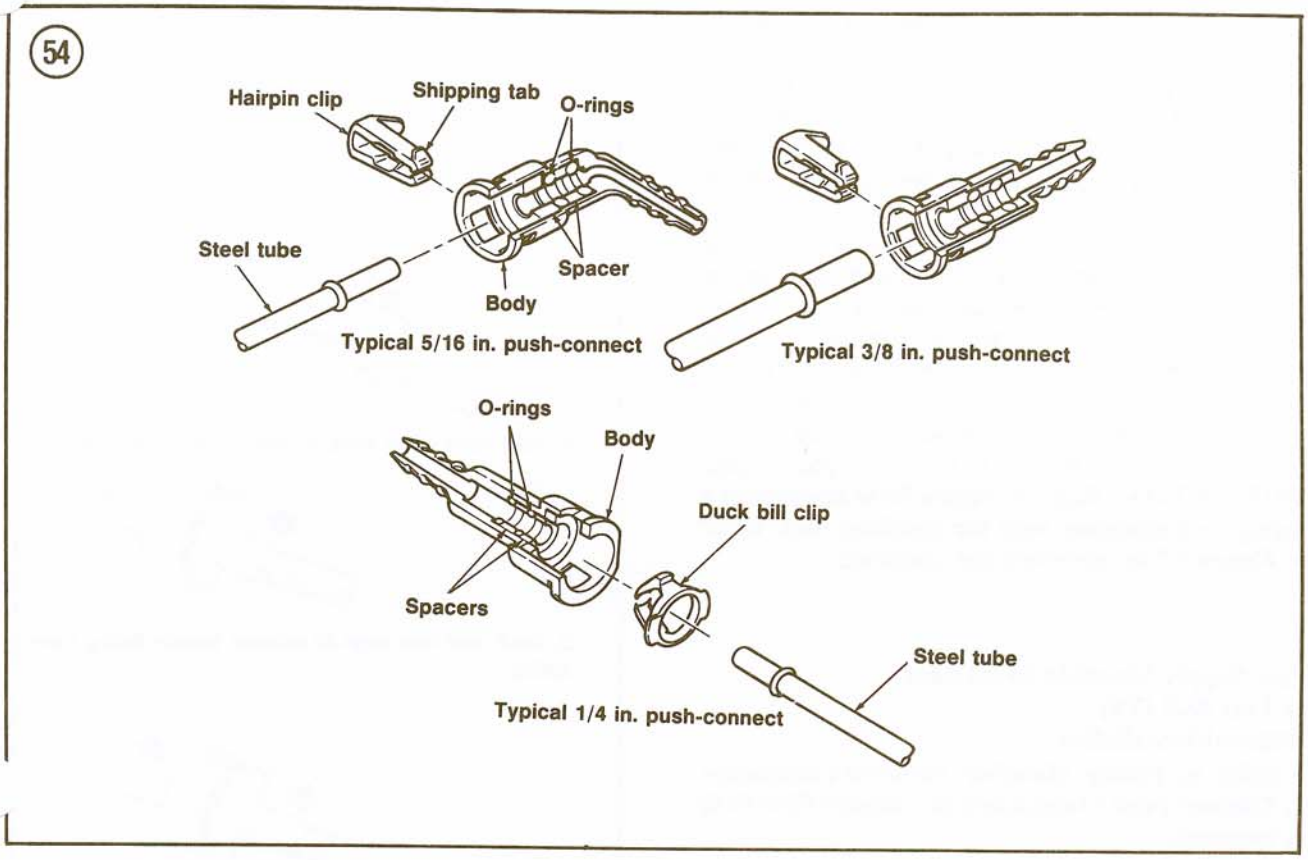

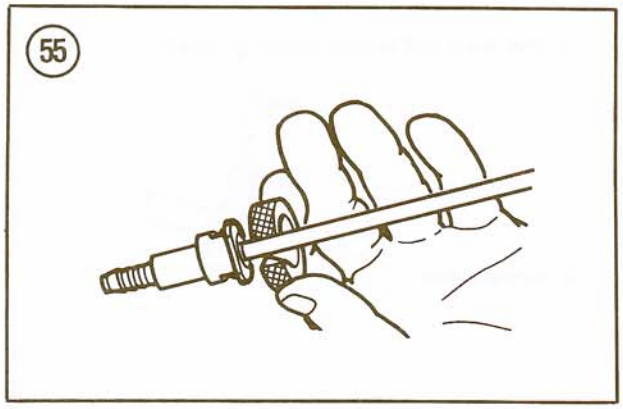

Figure 53 shows the 2.3L manifold; the 2.9L V6 is similar.

NOTE

If the proper gauge is not available, disconnect the vacuum line at the pressure regulator. Connect a hand vacuum pump to the regulator fitting, then draw and hold 25 in. Hg vacuum to release pressure into the tank through the return line.

4. Connect fuel injection pressure gauge (part No. T80L-9974-A) to the pressure relief valve and bleed off the pressure.
5. Remove the pressure gauge and reinstall the relief valve cap.

Quick-disconnect Fittings

Two types of quick-disconnect fuel line fittings are used on EFI vehicles: a push-connect and a spring lock coupling.

The push-connect fitting is used to connect a steel tubing to nylon fuel hose. Two styles are used: the duck bill clip and the hairpin clip (**Figure 54**). To disengage the duck bill clip, align the slot on tool part No. T82L-9500-AH with either clip tab (90° from the fitting slots) and insert as shown in **Figure 55**. To disengage the hairpin clip, bend the shipping tab down to clear the connector body. Spread the ends of the clip enough to disengage the fitting body and push them into the fitting. Grasp the top of the clip and work it free of the fitting body. Ford recommends that a new clip be used when reconnecting the fitting.

The spring lock coupling (**Figure 56**) is used to connect two lengths of steel tubing. It contains a garter spring inside a circular cage, with 2 O-rings used to seal the 2 halves of the coupling. When the flared end of the female fitting is inserted into the cage, it slides under the garter spring, which prevents it from pulling out.

O-ring and garter spring condition is critical on this connection and should be checked each time a connection is opened. Special replacement O-rings and garter springs are available at a dealer. If the garter spring is damaged or missing, it can be replaced with the use of a small hooked wire.

The spring lock coupling requires the use of tool part No. T81P-19623-G or part No. T81P-19623-G1. Refer to **Figure 56** to disconnect a spring lock coupling with the coupling tool. Refer to **Figure 57** to reconnect the coupling.

Fuel Supply Manifold (4-cylinder) or Fuel Rail (V6) Removal/Installation

Refer to *Intake Manifold Removal/Installation* in Chapter Four (4-cylinder) or Chapter Five (V6) as required.

4-cylinder Fuel Injector Removal/Installation

1. Remove the fuel supply manifold as described in this chapter.
2. Grasp the injector by its body and rock from side to side while pulling upward and out of its port in the fuel supply manifold. See **Figure 58**.
3. Check the condition of the 2 O-rings. Replace as required (it is a good idea to replace them regardless of condition).
4. Check the condition of the little plastic "hat" and washer that protects the injector pintle. If hat is not found on the injector, check the injector port in the intake manifold. Replace as required.
5. If new O-rings are installed, lubricate lightly with engine oil before sliding them into place on the injector.
6. Position injector over the manifold port and push into place with a light twisting motion.
7. Reinstall the fuel supply manifold as described in this chapter.

(56)

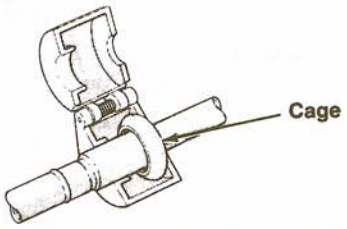

1. Tool must enter cage to release garter spring.

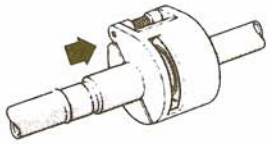

2. Push tool into cage to release female fitting from spring.

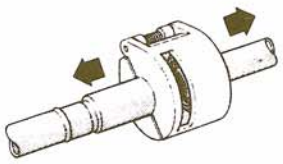

3. Pull male and female couplings apart.

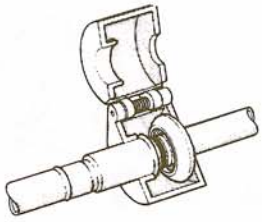

4. Remove tool.

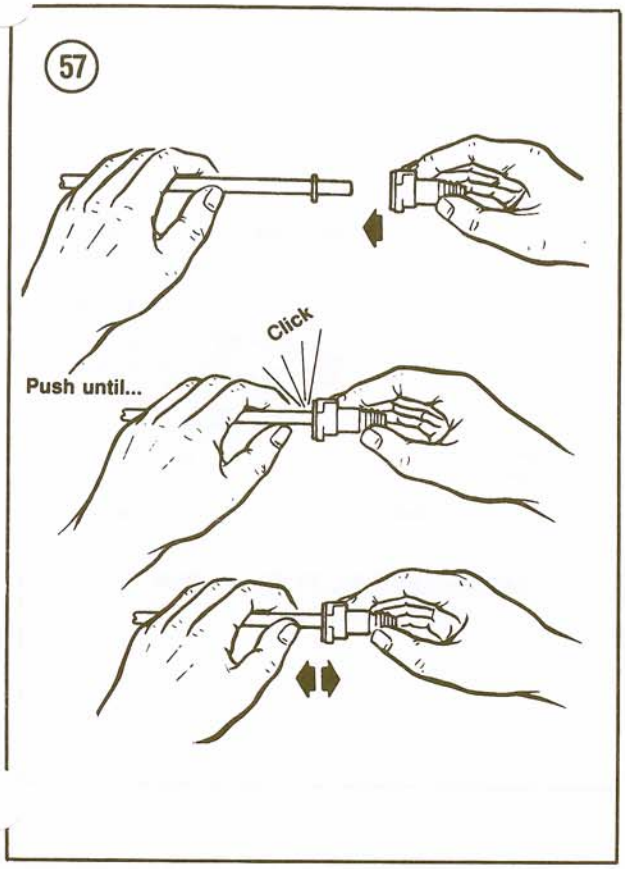

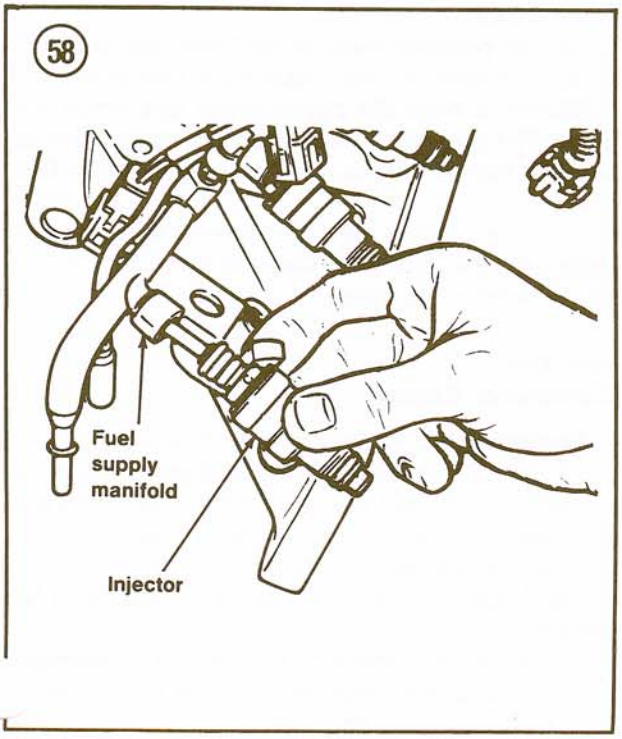

V6 Fuel Injector Removal/Installation

1. Remove the fuel rail as described in this chapter.
2. Grasp the injector by its body and carefully remove the retaining clip. Remove the injector and clip from the fuel rail.
3. Check the condition of the 2 O-rings. Replace as required (it is a good idea to replace them regardless of condition).
4. Check the condition of the little plastic "hat" and washer that protects the injector pintle. If hat is not found on the injector, check the injector port in the intake manifold. Replace as required.
5. If new O-rings are installed, lubricate lightly with engine oil before sliding them into place on the injector.
6. Position injector over the fuel rail port and push into place with a light twisting motion. Install the retaining clip.
7. Reinstall the fuel rail as described in this chapter.

FUEL PUMP

Carburetted engines use a non-serviceable mechanical fuel pump mounted on the left side of the engine. The 4-cylinder pump is operated by an eccentric on the auxiliary shaft (**Figure 59**). The

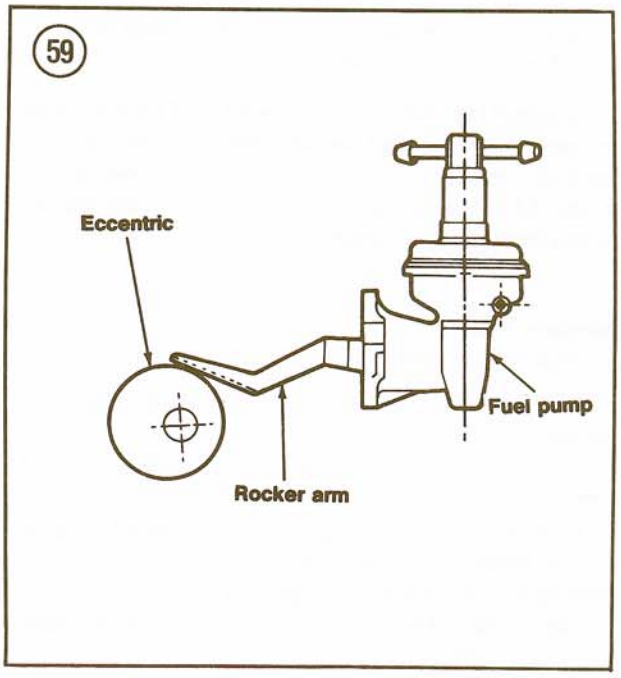

2.8L V6 pump lever arm is pushrod-activated and driving by an eccentric on the camshaft. See **Figure 60.**

All EFI engines use a low-pressure electric fuel pump mounted in the fuel tank and a high-pressure electric pump bracket-mounted on the frame rail underneath the vehicle. Vehicles equipped with dual fuel tanks have a separate low-pressure pump mounted in each tank. The fuel pump is activated by a fuel pump relay, bracket-mounted above the EEC-IV microprocessor or ESA.

The 2.3L turbo diesel uses an electric fuel pump, bracket-mounted on the frame rail underneath the vehicle.

The 2 most common fuel pump problems are incorrect pressure and low volume. Low pressure results in a too-lean mixture and too little fuel at high speeds. High pressure will cause carburetor flooding and result in poor mileage. Low volume also results in too little fuel at high speeds.

If a fuel system problem is suspected, check the fuel filter first. See Chapter Three. If the filter is not clogged or dirty, test the fuel pump.

NOTE

The fuel pump on carburetted vehicles has a tendency to be noisy. If fuel pump noise is bothersome, check for loose pump mounting bolts and retighten to 14-21 (19-29 N•m). Also check for loose or missing fuel line attaching clips and tighten or install as required. This condition transmits the fuel pump noise, causing it to be louder when sitting in the vehicle than when standing outside of it.

Incorrect fuel line pressure with EFI engines may be caused by a defective fuel pressure regulator or the high-pressure pump. Because of the complexity of the EFI system, pressure regulator tests should be performed by a dealer.

Pressure Test (Carburetted Engine)

1. Remove the air cleaner as described in this chapter.
2. Disconnect the fuel line at the carburetor fuel filter.
3. Connect a pressure gauge and a flexible hose with a restrictor clamp between the fuel line and filter inlet, as shown in **Figure 61.**
4. Place the other end of the line in a clean quart-size container.

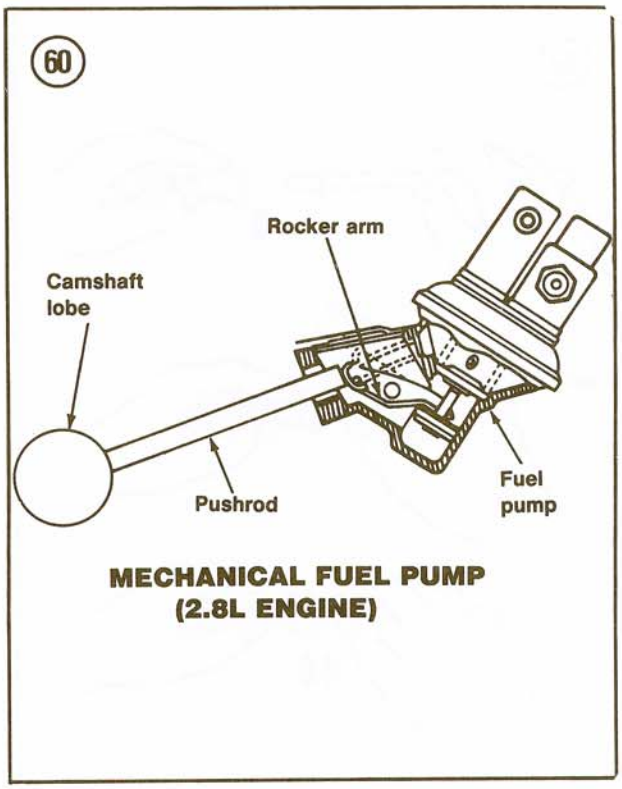

MECHANICAL FUEL PUMP (2.8L ENGINE)

5. Start the engine and let it idle. Vent the fuel system into the container by opening and closing the restrictor.
6. Let the pressure stabilize and read the gauge. If it does not read 5-7 psi, replace the fuel pump.
7. Slowly increase the engine speed and watch the gauge. The pressure should not vary measurably at different engine speeds. If it does, replace the fuel pump.
8. Shut the engine off. Disconnect the pressure gauge and restrictor line. Reconnect the fuel line to the carburetor fuel filter.

Flow Test (Carburetted Engine)

1. Perform Steps 1-4 of *Pressure Test.*
2. Disconnect the high tension lead at the center of the ignition coil and ground it with a jumper wire.
3. Crank the engine 10 revolutions and check the fuel in the container. If little or no fuel has accumulated, the pump is inoperative and must be replaced.
4. If the pump appears capable of delivering sufficient fuel, reconnect the coil high tension lead. Start the engine and let it run.

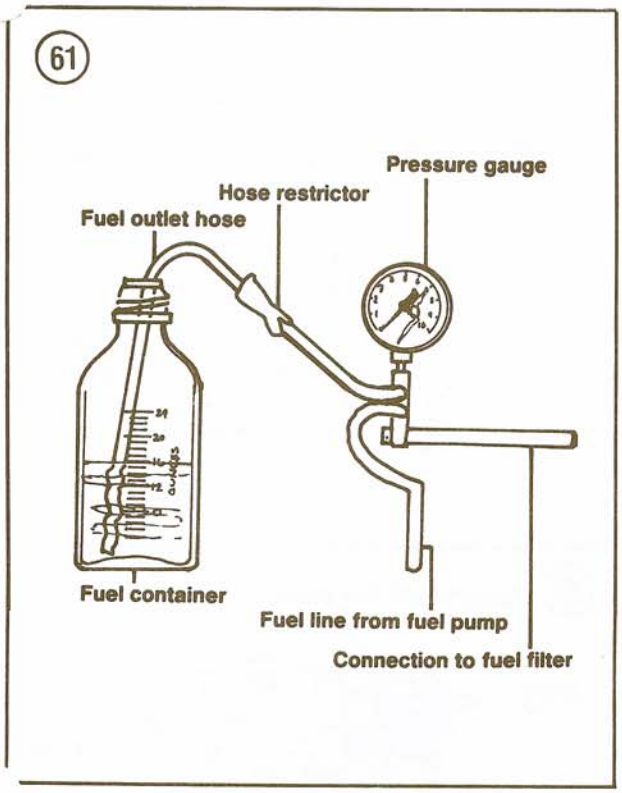

5. Open the hose restrictor for 30 seconds, then close the restrictor.
6. Check the container. It should be approximately 1/2 full. If not, replace the fuel pump.
7. Shut the engine off. Disconnect the pressure gauge and restrictor line. Reconnect the fuel line to the carburetor fuel filter.

Electric Fuel Pump Test (EFI Engine)

This procedure requires the help of an assistant, the use of pressure gauge part No. T80L-9974-A and an auxiliary wiring harness that connects to the fuel pump connector (the auxiliary harness can be fabricated).
1. Securely block both front wheels so the truck will not roll in either direction. Raise the vehicle with a jack and place it on jackstands.
2. Disconnect the electrical connector at the front of the fuel pump inlet and connect a voltmeter to the body wiring harness.
3. Note the voltmeter reading while an assistant turns the ignition key ON (do not start engine).

If voltage does not rise to battery voltage (12 volts) and return to zero after about one second, check the inertia switch and wiring.
5. Connect an ohmmeter to the pump wiring harness connector. If continuity is not shown, connect the ohmmeter directly to the pump wiring harness terminals.
6. If there is no continuity at the pump terminals, replace the pump. If there is continuity at the pump terminals but not at the wiring harness connector, replace the harness.
7. Lower the vehicle, relieve fuel system pressure as described in this chapter and connect pressure gauge part No. T80L-9974-A to the diagnostic fitting on the fuel supply manifold or fuel rail.

6

NOTE

If the vehicle is not equipped with a diagnostic fitting, connect the pressure gauge between the fuel supply manifold or fuel rail and the pump outlet or fuel filter.

8. Disconnect the fuel return line at the fuel supply manifold and place the line in a calibrated quart container.
9. Connect an auxiliary wiring harness between the fuel pump and a fully-charged 12-volt battery for 10 seconds while noting the pressure gauge reading. If no reading is shown, check for poor terminal connections at pump or reverse polarity.
10. If the pump is operating properly, the following 3 conditions will be met:

a. The gauge will indicate 35-45 psi (241-310 kPa) during the 10-second period.
b. The pressure will remain at a minimum of 30 psi (207 kPa) when the auxiliary harness is disconnected from the battery.
c. At least 5.6 ounces of fuel will flow into the calibrated container in the 10-second period.

11. If pressure specifications are met but flow is not, check for restrictions in the system. If none are found, replace the pump.
12. If initial pressure and flow conditions are met, but pressure will not maintain, check for a leaking pressure regulator or injector(s).
13. If no pressure or flow specifications are met, check for restrictions in the system. If none are found, replace the fuel pump and fuel tank pick-up tube filter.

Mechanical Fuel Pump Removal/Installation (Carburetted Engine)

Refer to **Figure 62** (typical) for this procedure.

1. Use 2 open-end wrenches to loosen the fuel line nut at the pump outlet fitting.
2. Loosen the pump mounting bolts 2 full turns. Rap the pump sharply with your hand or a rubber mallet to break the gasket seal.
3. Hold the pump while an assistant rotates the engine by turning the ignition key ON and OFF quickly to bring the auxiliary shaft eccentric (4-cylinder) or camshaft eccentric (V6) near its low point. When this is reached, tension on the fuel pump will be reduced noticeably.
4. Remove the pump inlet and outlet lines. Cap the lines to prevent leakage.
5. Remove the pump mounting bolts, fuel pump and gasket. Leave the pump pushrod (V6 only) in the engine.
6. Clean all gasket residue from the engine mounting flange with a putty knife. If reinstalling the same pump, clean gasket residue from the pump mounting pad.
7. Check rubber hoses between fuel lines and pump. If cracked, hardened or frayed, install new lengths of fuel hose before installing the pump.
8. Install the mounting bolts in the pump flange holes and fit the new gasket over the bolts.
9. Install the fuel pump against the block (and over the pushrod on V6 engines). Thread the bolts into the engine mounting flange.
10. Tighten the pump mounting bolts to 14-21 ft.-lb. (19-29 N•m).
11. Connect the fuel line to the pump outlet fitting. Tighten the fitting to 15 ft.-lb. (20 N•m).
12. Connect the pump inlet line and install a new hose clamp.
13. Start the engine and let it run for 2 minutes. Stop the engine and check for fuel leaks at the pump base and inlet/outlet connections.

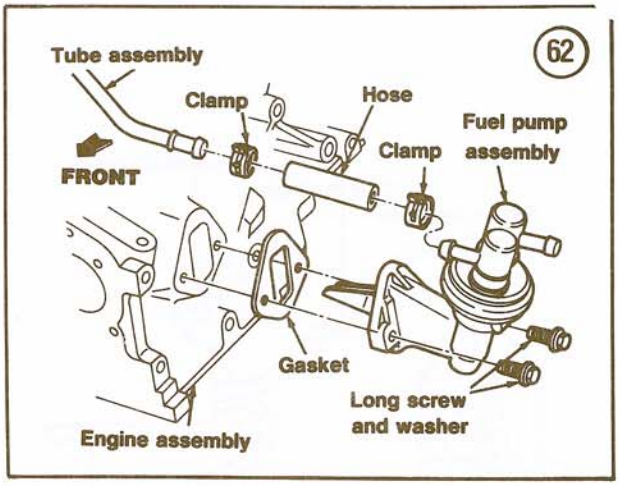

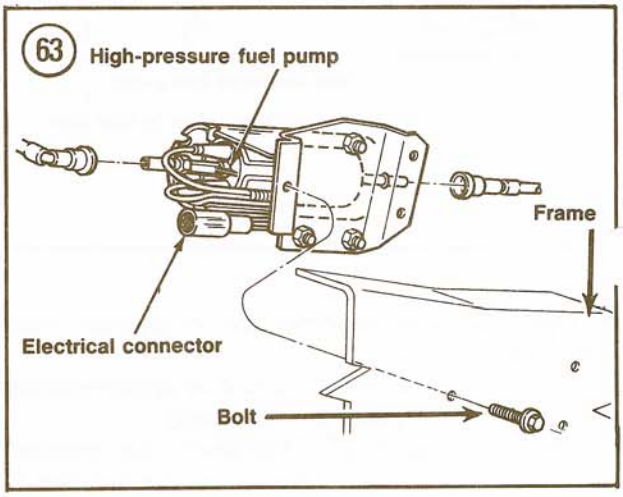

High-pressure Fuel Pump Removal/Installation (Fuel Injected and 2.3L Turbo Diesel Engine)

Refer to **Figure 63** (typical) for this procedure.

1. Fuel injected engine—Relieve fuel system pressure as described in this chapter.
2. Disconnect the negative battery cable.

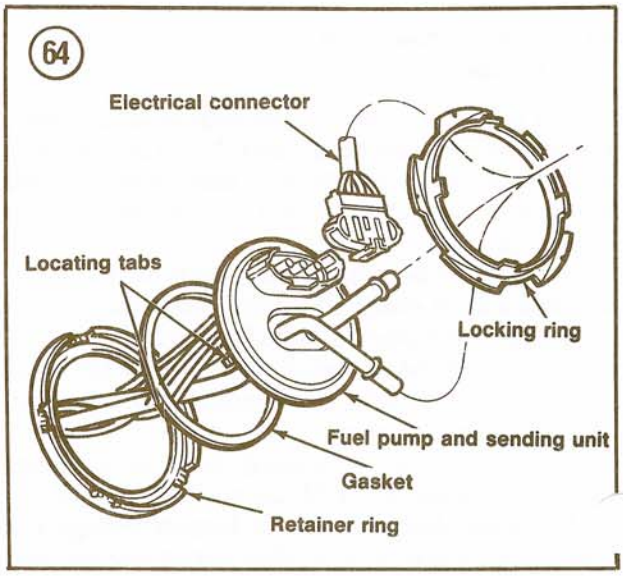

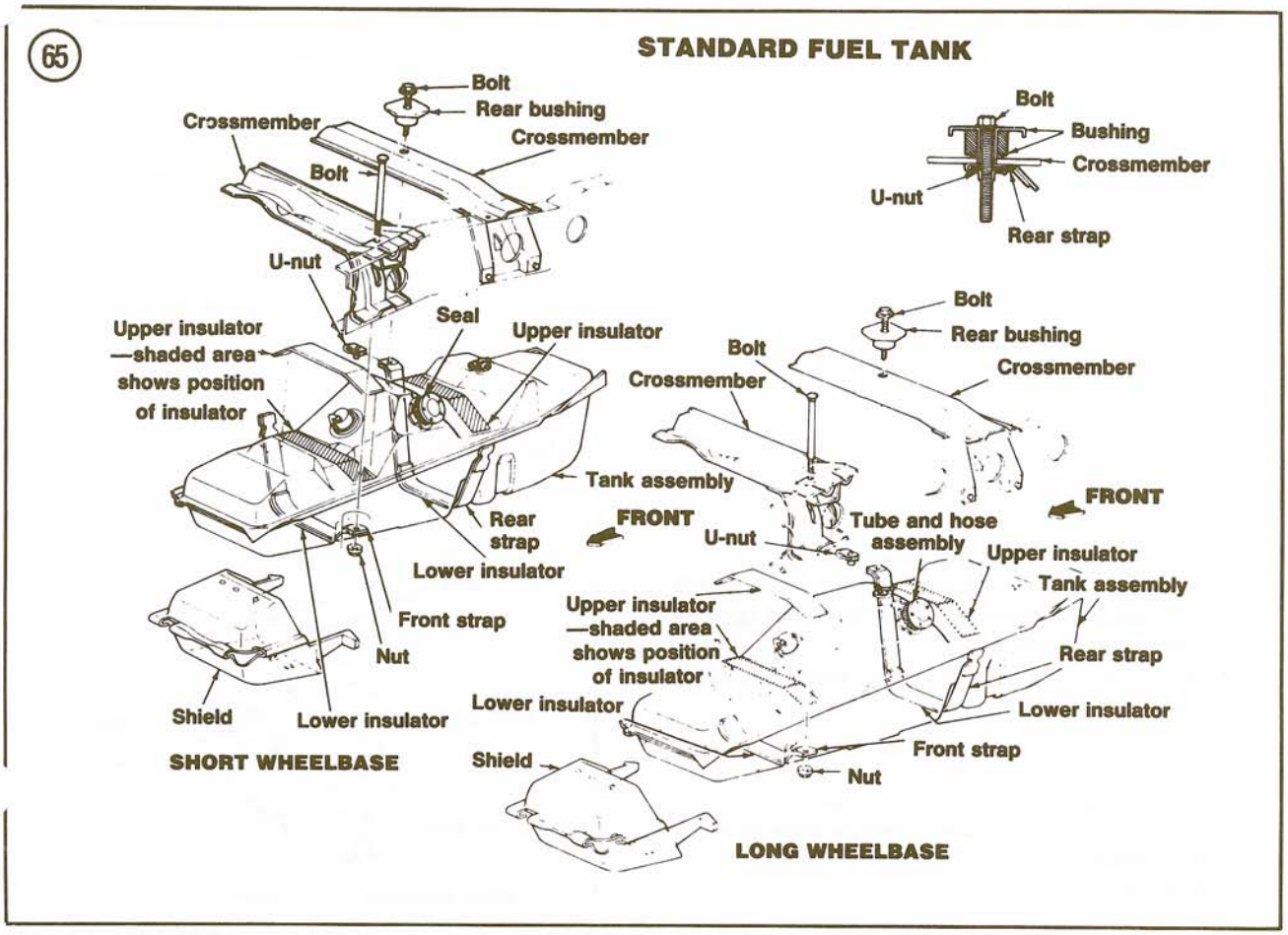

3. Securely block both front wheels so the truck will not roll in either direction. Raise the vehicle with a jack and place it on jackstands.
4. Disconnect the fuel pump electrical connector.
5. Disconnect the fuel inlet and outlet lines as described in this chapter. Cap the lines to prevent leakage.
6. Remove the 3 bolts holding the pump assembly to the frame. Remove the pump assembly and bracket.
7. Remove the 3 bolts holding the pump to the bracket.
8. Installation is the reverse of removal. Install new retaining clips on fuel line fittings, if used. Start the engine and check for leaks.

Low-pressure Fuel Pump Removal/Installation (Fuel Injected Engine)

To replace the in-tank fuel pump, remove the fuel tank as described in this chapter. Rotate the locking ring in a counterclockwise direction with Ford tool part No. T74P-9275-A or equivalent and remove the fuel pump and sending unit from the tank. See **Figure 64**. Installation is the reverse of removal.

FUEL TANK AND LINES

The standard fuel tank is installed at the vehicle's midpoint and uses a front-mounted shield. Short wheelbase models have a capacity of 14.5 gallons and long wheelbase models use a 17-gallon capacity tank. A 13-gallon auxiliary fuel tank installed behind the rear axle is optional with either wheelbase.

The standard fuel tank is attached by 2 metal straps. The front strap is retained by a long bolt through the crossmember; the rear strap uses a short crossmember bolt and U-nut. See **Figure 65**.

The auxiliary fuel tank is retained by 2 metal straps as shown in **Figure 66**.

When equipped with the auxiliary tank, an electrically operated fuel selector valve feeds the fuel pump from the front tank. When a dash-mounted fuel selector switch is moved from the FRONT to REAR position, fuel feed is transferred to the rear tank. **Figure 67** shows the duel tank installation and location of the fuel selector valve.

A skid plate and support assembly is used on 4-wheel drive vehicles to protect the fuel tank.

Standard Fuel Tank Removal/Installation

Refer to **Figure 65** for this procedure.

1. Disconnect the negative battery cable on gasoline models. Disconnect both negative battery cables on diesel models.
2. Remove the fuel filler cap and siphon all fuel from the tank.

WARNING

Never store gasoline in an open container, since it is an extreme fire hazard. Store gasoline in a sealed metal container away from heat, sparks and flame.

3. Securely block both front wheels so the truck will not roll in either direction. Raise the vehicle with a jack and place it on jackstands.
4. Loosen the filler pipe clamp (**Figure 68**).
5. On 4-wheel drive models, remove the skid plate and brackets.
6. Remove the rear strap bolt and bushing. Remove the rear strap.
7. Remove the front strap nut. Remove the front strap.
8. Remove the feed and return hose clamps at the sender unit. Remove the hoses.
9. Remove the fuel vapor hose at the vapor valve.
10. Lower the tank from the vehicle.

66 AUXILIARY FUEL TANK

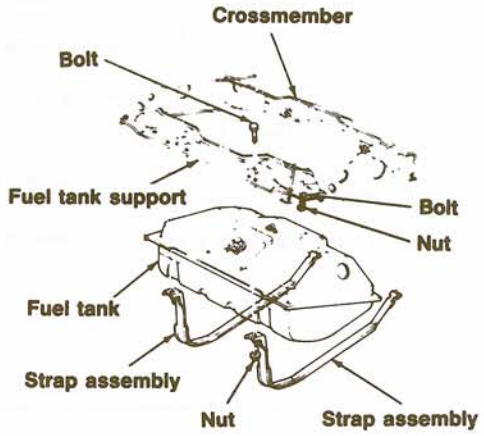

67 DUAL FUEL TANK INSTALLATION

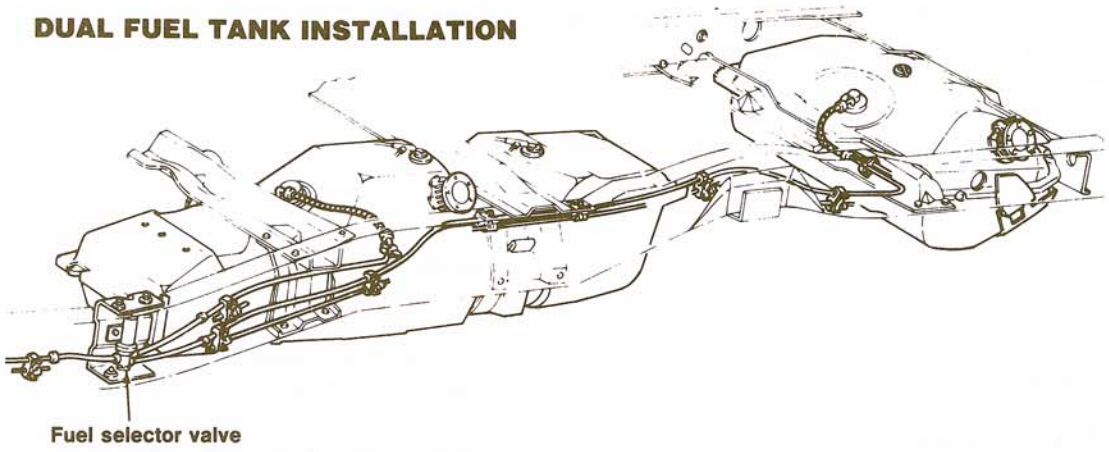

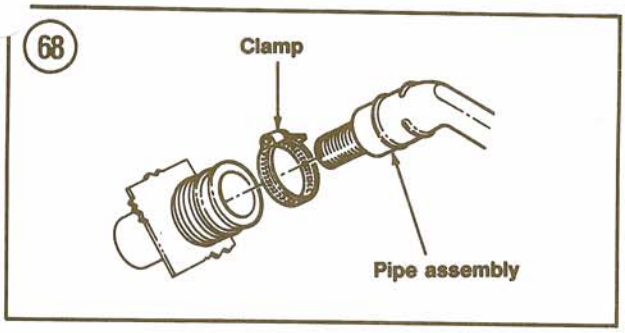

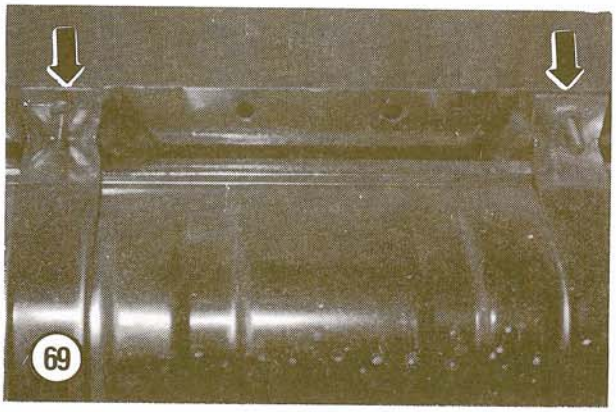

11. Remove the shield and front/rear upper insulators from the tank.
12. Remove the front/rear lower insulators from the straps. Check the insulators for damage and replace as required.

NOTE

If insulator replacement is required, use an adhesive meeting Ford specification ESB-M2G116-A.

13. If it is necessary to remove the front mounting bolt, drill a hole in the cab floor for access to the bolt.
14. Installation is the reverse of removal. Tighten the tank fasteners to 18-25 ft.-lb. (25-33 N•m). Tighten the filler pipe clamp to 25-35 in.-lb. (2.8-3.9 N•m). On 4-wheel drive models, tighten the skid plate/bracket fasteners to 15-19 ft.-lb. (20-27 N•m). On fuel injected models, install new retaining clips in the push/connect fittings, if used.

Auxiliary Fuel Tank
Removal/Installation

1. Disconnect the negative battery cable on gasoline models. Disconnect both negative battery cables on diesel models.
2. Remove the fuel filler cap and siphon all fuel from the tank.

WARNING

Never store gasoline in an open container, since it is an extreme fire hazard. Store gasoline in a sealed metal container away from heat, sparks and flame.

3. Raise the vehicle with a jack and place it on jackstands.
4. On 4-wheel drive models, remove the skid plate and brackets.
5. Remove the 2 nuts from the fuel tank support straps (**Figure 69**).
6. Loosen the filler pipe clamp.
7. Lower the tank from the vehicle.
8. Remove the sender unit and vapor valve tubes.
9. Installation is the reverse of removal. Tighten tank strap fasteners to 18-25 ft.-lb. (25-33 N•m). Tighten the filler pipe clamp to 25-35 in.-lb. (2.8-3.9 N•m). On 4-wheel drive models, tighten the skid plate/bracket fasteners to 15-19 ft.-lb. (20-27 N•m).

Repairing Fuel Tank Leaks

Fuel tank leaks can be repaired by soldering.

WARNING

The fuel tank is capable of exploding and killing anyone nearby. Always observe the following precautions when repairing a leak.

1. Have the tank steam-cleaned *inside* and *outside*.
2. Fill the tank with inert gas such as nitrogen or carbon dioxide or fill the tank *completely* with water. Gasoline residue on the tank walls can form a highly explosive vapor if allowed to mix with air.
3. Have a fire extinguisher nearby.
4. After making the necessary repairs, pour the water out, put about one quart of fuel in the tank and slosh it around. Pour the fuel out, blow the tank dry and install it in the truck.

Fuel Lines

The fuel tank and lines are part of the evaporative emission control system. The rubber hoses (carburetted engines) and nylon tubing (fuel injected engines) used in this system are manufactured of special fuel-resistant materials. Regular hose or tubing should never be used as a replacement.

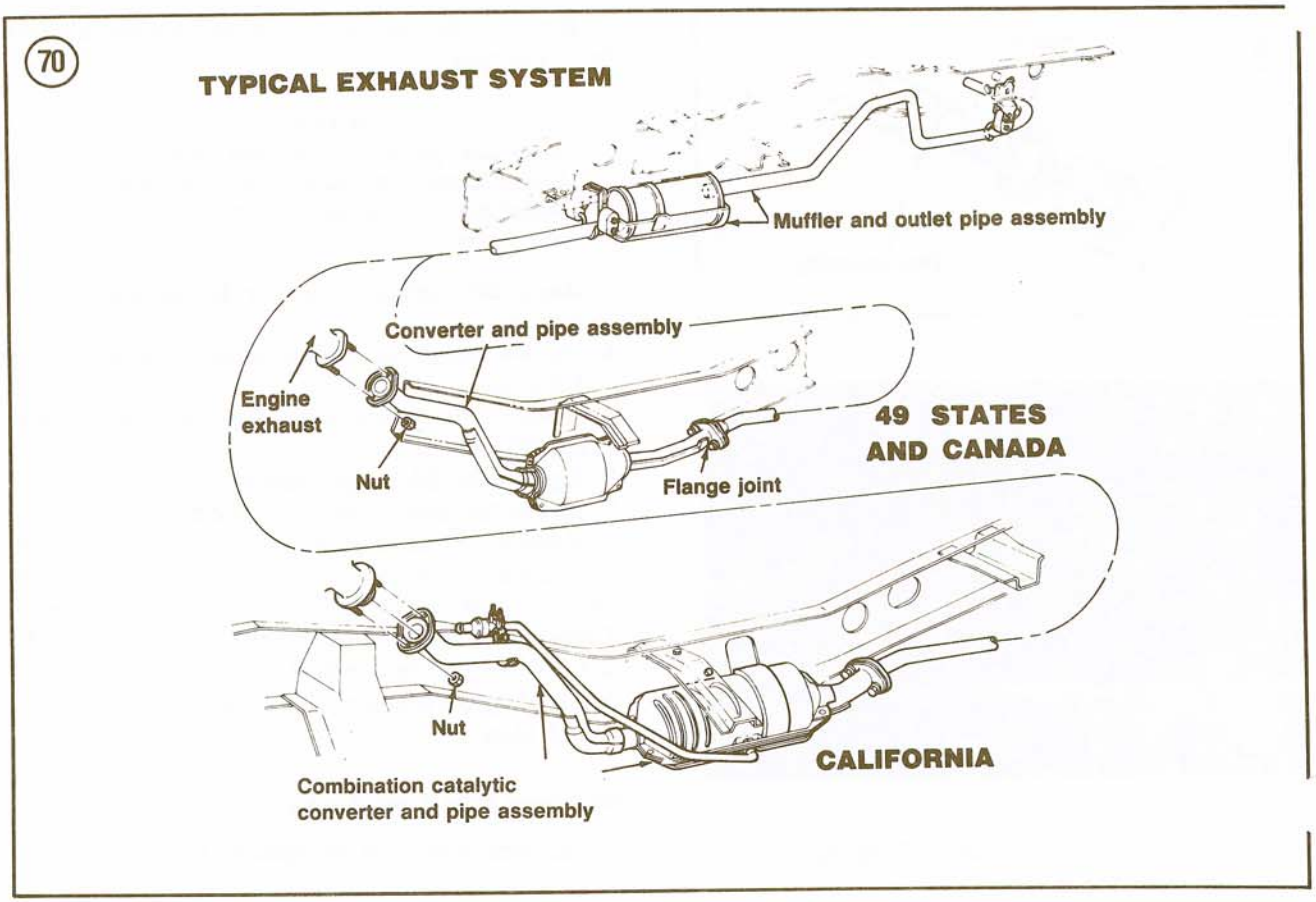

Unlike steel fuel lines, nylon fuel tubing can be quickly damaged by excessive heat or sparks caused by welding or grinding operations performed near the fuel lines. When such operations must be performed, Ford recommends that nylon fuel tubing be removed from the vehicle.

cannot be repaired by using hoses and clamps as a means of splicing a damaged or leaking section. Ford supplies approved service parts to safely correct any problems with nylon fuel lines.

EXHAUST SYSTEM

All vehicles are fitted with a 2-piece exhaust system. The inlet pipe is a one-piece design which includes the catalytic converter(s). The outlet pipe is a one-piece design which includes the muffler. A flat flange joint is used instead of a slip joint to connect the converter/inlet pipe and muffler/outlet pipe assemblies. **Figure 70** shows the typical muffler assembly used on all vehicles.

The exhaust system (including brush shields) should be free of corrosion, leaks, binding, grounding and/or excessive vibration. Loose, broken or misaligned clamps, shields, brackets or pipes should be serviced as necessary to keep the exhaust system in a safe operating condition.

WARNING

The exhaust system is extremely hot under normal operating conditions. To avoid the possibility of a bad burn, it is advisable to work on the system only when it is cool. Be especially careful around the catalytic converter(s). It reaches temperatures of 600° F or greater after only a brief period of engine operation.

Muffler Assembly
Removal/Installation

1. Remove the 2 nuts and bolts at the flat flange (**Figure 71**).
2. Apply a solution of water and liquid dishwashing detergent to the support insulate and the metal support rod ends. See **Figure 72.**

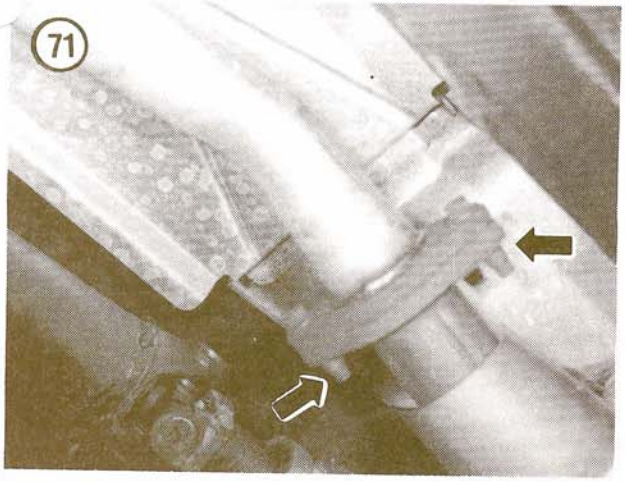

71

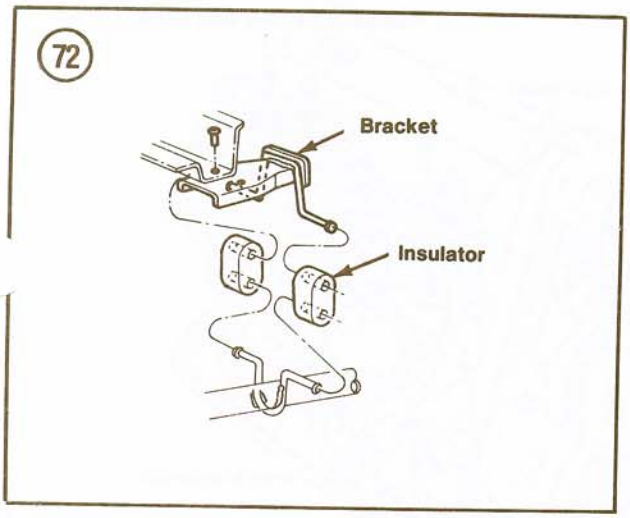

72

3. Force the support rods from the rubber insulators.
4. Slide the muffler and outlet pipe assembly over the axle housing and remove from the vehicle.
5. Installation is the reverse of removal. Install a new gasket at the flat flange and tighten the flange bolts to 19-25 ft.-lb. (25-35 N•m).

Converter and Pipe Assembly Removal/Installation

1. Remove the 2 nuts and bolts at the flat flange (**Figure 71**).
2. If equipped with Managed Thermactor Air, remove the clamp holding the MTA tube to the converter. Remove screw/washer assembly holding MTA tube to the inlet pipe. Separate MTA tube ..om connector.
3. Remove the 2 nuts holding the converter pipe assembly to the exhaust manifold.
4. Remove the converter pipe assembly from the vehicle.
5. Installation is the reverse of removal. Tighten exhaust manifold nuts to 25-33 ft.-lb. (34-46 N•m). Install a new gasket at the flat flange and tighten flange bolts to 19-25 ft.-lb. (25-33 N•m). If equipped with Managed Thermactor Air, tighten clamp to 5-8 ft.-lb. (6.5-11 N•m). Tighten MTA tube bracket screw/washer to 5-8 ft.-lb. (6.5-11 N•m).

6

GASOLINE ENGINE EMISSION CONTROL SYSTEMS

Evaporative Emission Control System

Three systems are used, depending upon emission calibration of the gasoline engine. Carburetted Microprocessor Controlled (MCU) engines use one system while carburetted non-MCU (high altitude) engines use another. Both systems prevent gasoline vapors from escaping into the atmosphere. They differ primarily in when and how the fuel vapors collected in the canister are purged. **Figure 73** shows the typical carburetted 4-cylinder system; **Figure 74** shows the typical carburetted V6 system.

MCU engines use a purge regulator valve. The MCU determines when to purge the fuel vapors from the canister. Non-MCU (high altitude) engines use a purge control valve. Engine vacuum determines when to purge the fuel vapors from the canister.

Fuel injected engines use a third system without valves. Vapors are purged directly from the canister to the throttle body when directed by the EEC-IV microprocessor. **Figure 75** shows the 4-cylinder system; the 2.9L V6 is similar.

Some 1985 and later vehicles may be equipped with an inferred mileage sensor (IMS). This device changes the calibration of the EEC-IV microprocessor at a specified mileage, permitting changes in the microprocessor strategy for Thermactor air and EGR application.

There is no scheduled maintenance of any of the EEC systems used. Physical damage, leaks and missing components are the most common causes of evaporative system failures.

(73)

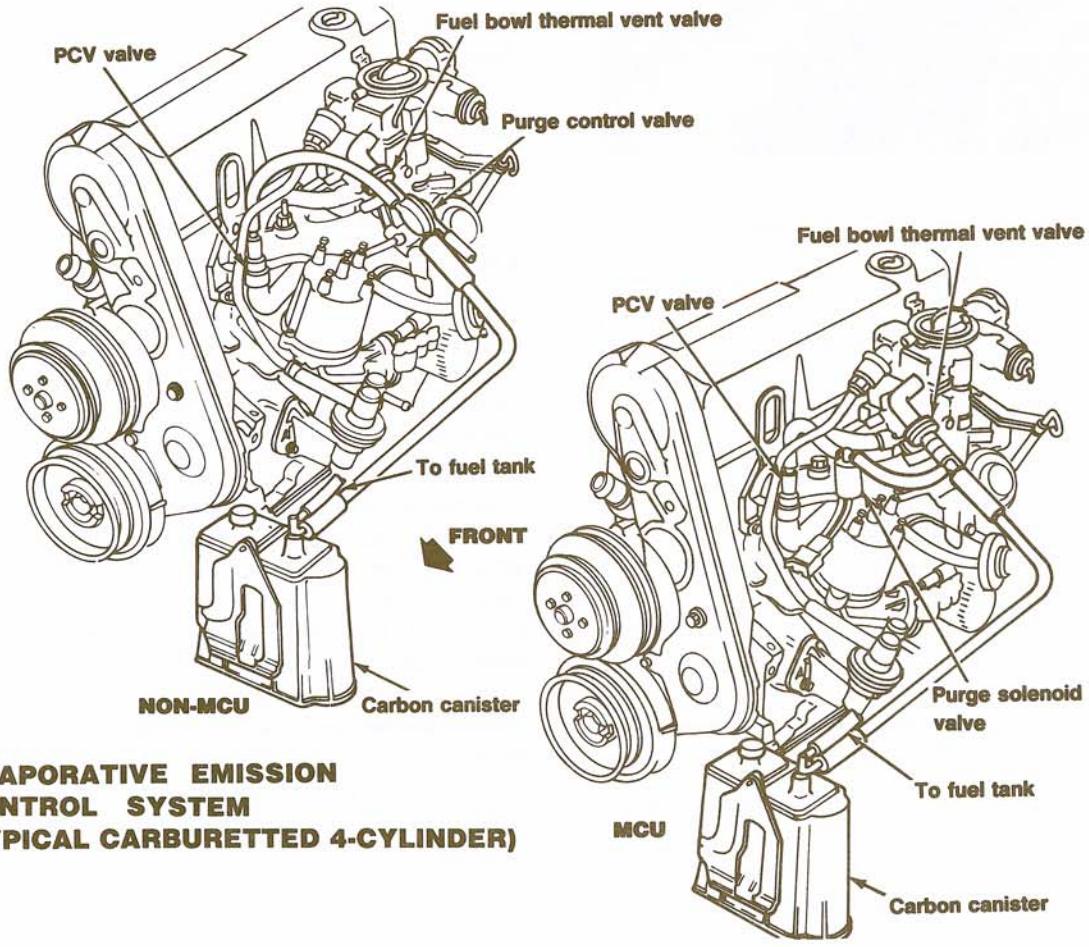

EVAPORATIVE EMISSION CONTROL SYSTEM (TYPICAL CARBURETTED 4-CYLINDER)

74

EVAPORATIVE EMISSION CONTROL SYSTEM (TYPICAL CARBURETTED V6)

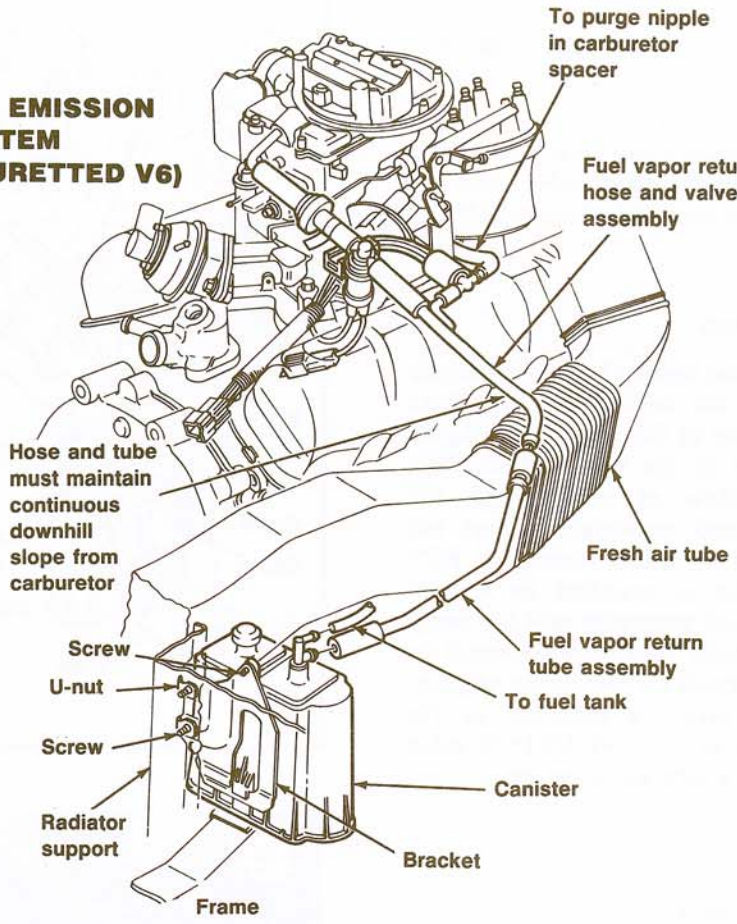

System Inspection

1. Check the vapor lines for cracks or loose connections. Replace or tighten as necessary.
2. Make sure the fuel vapor hose and valve assembly are properly positioned. The hose must maintain a continuous downhill slope from the carburetor or throttle body. See **Figures 73-75.**
3. Check for a deformed fuel tank. Make sure the tank is not cracked and does not leak gasoline.
4. Inspect the vapor canister for cracks or other damage.
5. Check the fuel filler cap for a damaged gasket.

CAUTION

Any damage or contamination which prevents the filler cap pressure-vacuum valve from working properly can result in deformation of the fuel tank.

Positive Crankcase Ventilation (PCV) System

A crankcase ventilation system is used to recycle crankcase vapors into the combustion chambers for burning. A vent hose at the rear of the engine connects the crankcase to the valve cover. This provides a positive flow of air through the crankcase. Fresh air and crankcase vapors are drawn into the intake manifold through a PCV valve. The PCV valve is installed in a hose between the crankcase oil separator and the purge control or purge solenoid valve (carburetted) or throttle body (fuel injected) on 4-cylinder engines. The 2.8L V6 PCV valve is installed in the passenger side valve cover; the 2.9L V6 PCV valve is located in the driver's side valve cover.

PCV System Check

NOTE

A disconnected or clogged PCV valve or hose will result in a rough engine idle. Always check the PCV system before blaming a rough idle on the carburetor or MCU/EEC-IV microprocessor.

1. Remove the PCV valve from the hose leading to the crankcase oil separator (4-cylinder) or valve cover (V6).
2. Shake the valve back and forth, listening for a rattle. If the check needle inside the PCV valve does not rattle, replace the valve.
3. Reinstall the PCV valve. Start the engine and run at idle. Disconnect the crankcase filter closure

CANISTER VENTING HOSE ROUTING (2.3L ENGINE TYPICAL)

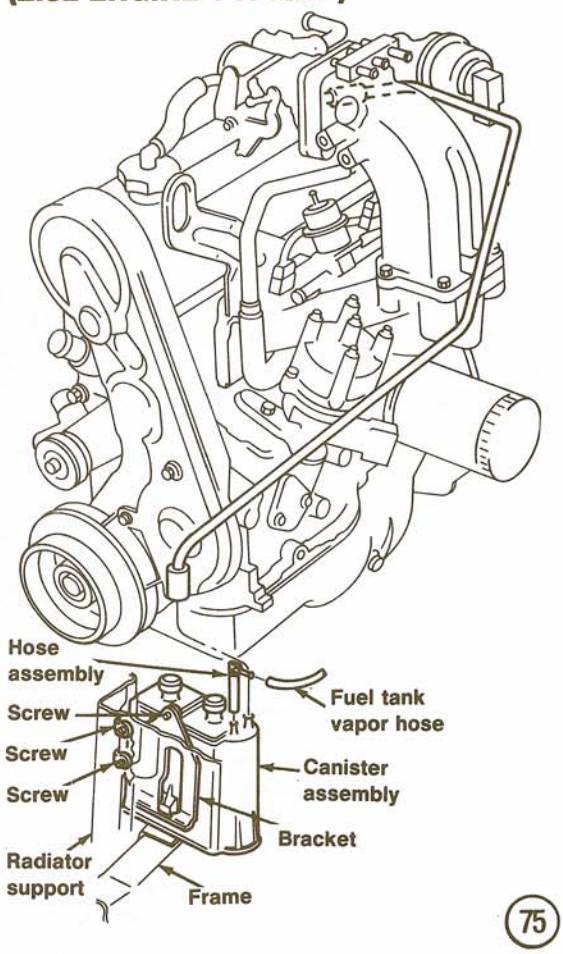

75

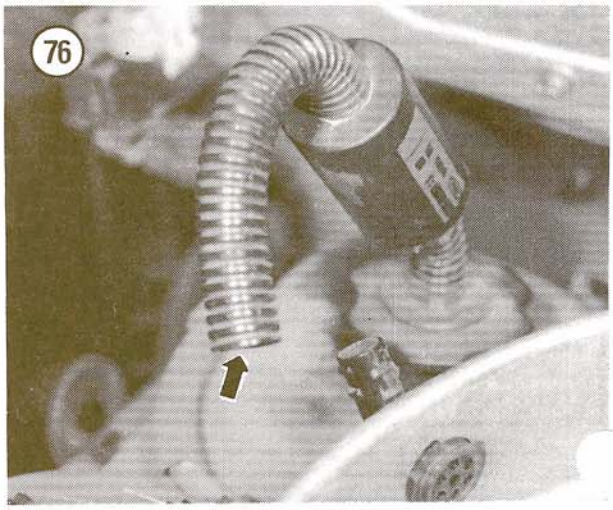

76

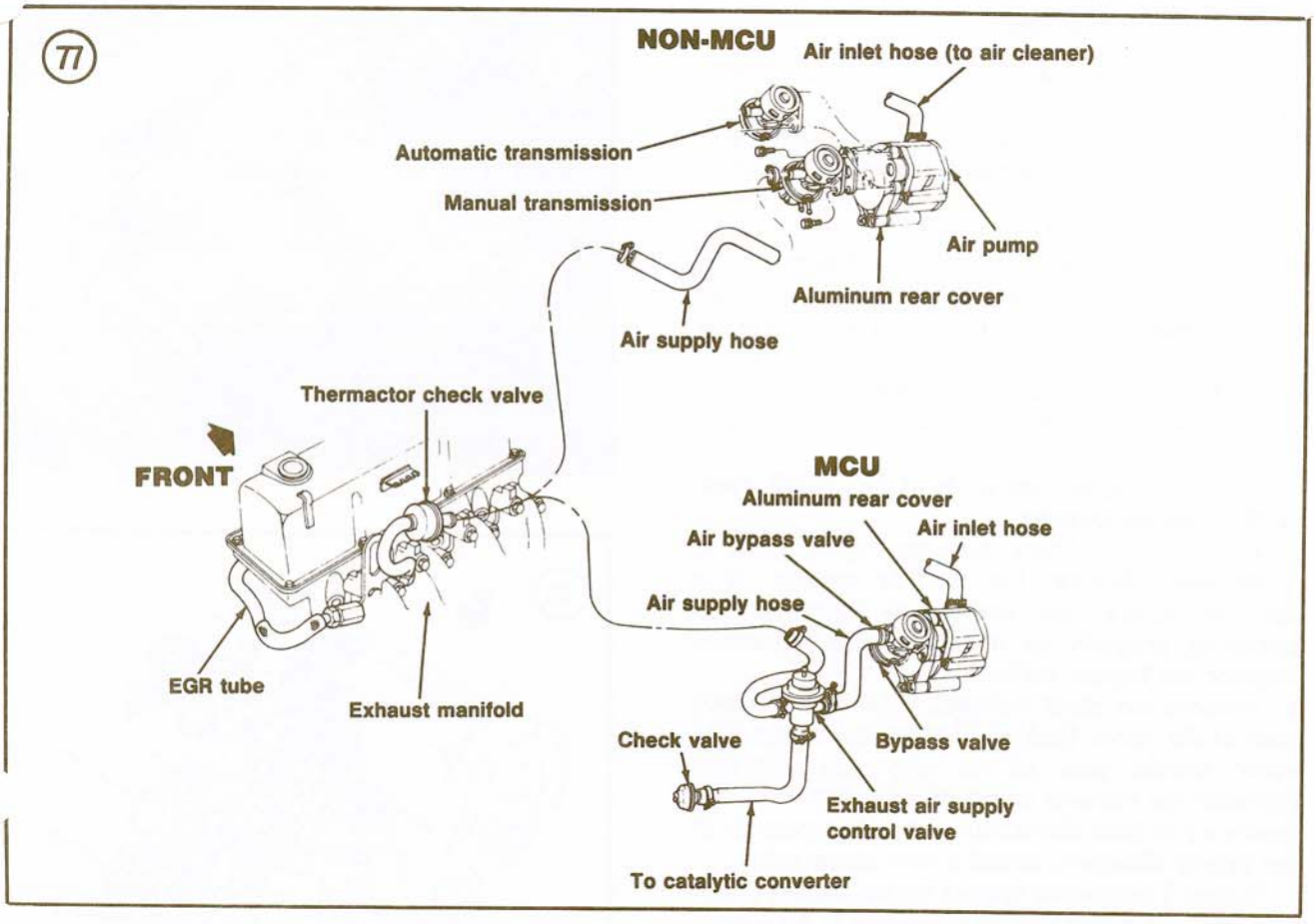

hose at the air cleaner. See **Figure 76** (typical). Vacuum should be felt when a finger is placed over the hose.

4. If no vacuum is felt in Step 3, reconnect the hose at the air cleaner and disconnect the hose at the purge end of the PCV valve. Vacuum should be felt when a finger is placed over the hose.
5. If no vacuum is felt in Step 4, check for a plugged hose or vacuum leak in the PCV system.
6. Check all system hoses for cracks, brittleness or loose connections. Tighten and replace as required.

Thermactor System

The Thermactor system on non-MCU (high altitude) engines consists of an air pump, bypass valve, check valve and connecting hoses. The 2.3L EFI and all MCU-equipped engines utilize an air supply control valve and a second check valve in addition to the basic system. The 2.8L V6 uses a Managed Thermactor Air (MTA) system which is controlled by solenoids on direction from the EEC-IV microprocessor; the 2.9L V6 has no Thermactor system.

All Thermactor systems reduce hydrocarbon and carbon monoxide emissions by pumping fresh air into the exhaust ports near the valves during cold engine operation. This allows the hot exhaust gases to burn for a longer time. On 2.3L EFI, MCU and MTA systems, the microprocessor directs pump air through the air supply control valve to the catalytic converter during cold engine operation, switching it to the exhaust ports as the engine warms up. This additional air promotes burning in the light-off converter and quickly raises converter temperature to control the HC and CO emissions in the exhaust gas.

The check valves prevent hot exhaust gases from reversing their flow in the system in case of a pump malfunction. **Figure 77** shows a typical MCU and non-MCU system and their components.

Thermactor System Test

1. Check and adjust the drive belt tension if necessary. See Chapter Three.
2. Inspect all system hoses for cracking, burning or loose connections. Replace hoses and tighten connections as necessary.
3. Start the engine. Disconnect the hose(s) at the pump side of the check valve(s). See **Figure 78**. On non-MCU (high altitude) applications, there shold be a constant airflow to the check valve. On all other applications, there should be airflow to the exhaust port check valve for a few seconds, then the airflow should switch to the converter check valve.
4. Increase engine speed to 1,500-2,000 rpm. Airflow should increase.
5. Reconnect the hoses. Increase engine speed to 2,000 rpm. Release the throttle quickly. If a backfire occurs, the air bypass valve is not operating properly or the silencer is defective. Replace the bypass valve.
6. Remove the check valve(s). Blow through both ends of the valve. Suck air through both ends. The valve should pass air in only one direction (towards the exhaust manifold or converter). If it passes air in both directions or does not pass air in the proper direction, install a new check valve.

Further Thermactor system testing should be left to a dealer. Correct system operation is dependent upon the proper operation of the MCU or EEC-IV microprocessor and/or several solenoid valves. Their testing is best left to a qualified technician.

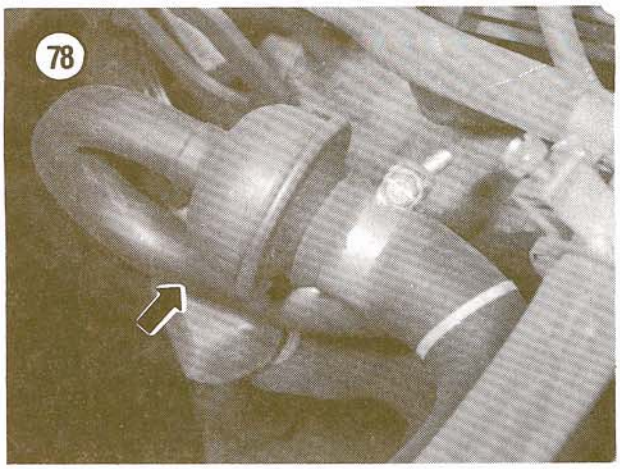

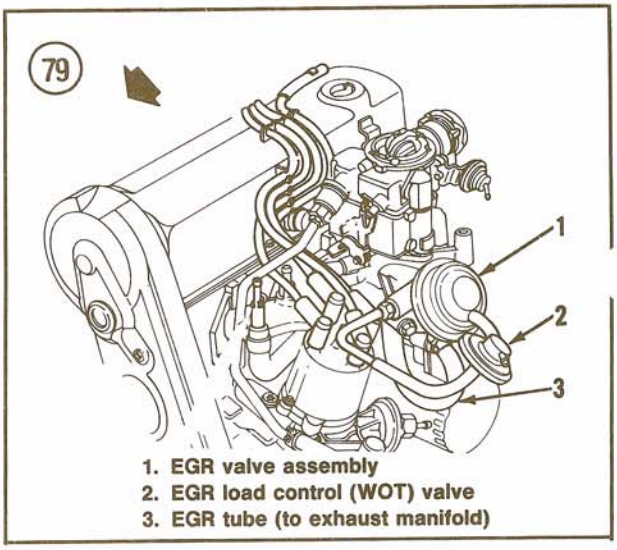

1. EGR valve assembly
2. EGR load control (WOT) valve
3. EGR tube (to exhaust manifold)

Exhaust Gas Recirculation (EGR System)

This system recirculates a small amount of exhaust gas into the incoming air/fuel mixture through an integral backpressure type (4-cylinder carburetted), a sonic type (2.3L EFI and 2.8L V6) or a pressure feedback electronic (2.9L V6) EGR valve. This lowers the combustion temperature and reduces oxides of nitrogen (NOx) emissions.

The EGR valve is mounted on an adapter underneath the carburetor and is connected to an EGR load control or WOT (wide open throttle) valve (**Figure 79**) on 4-cylinder carburetted engines. Under conditions of low intake manifold vacuum, such as wide-open throttle, the WOT valve shuts off EGR flow. Valve operation is controlled by engine vacuum and the amount of backpressure in the exhaust system.

The EGR valve on 2.3L EFI engines is mounted on the upper intake manifold (**Figure 80**) and connected to the exhaust manifold by a metal tube. EGR valve operation is controlled by the EEC-IV microprocessor.

The 2.8L V6 EGR valve is mounted on the intake manifold underneath the carburetor. An EGR valve position sensor attached to the valve sends a voltage signal to the EEC-IV microprocessor. Since the unit is completely sealed, valve movement cannot be seen. The EGR valve and sensor can be serviced separately.

The 2.9L V6 EGR valve contains a vacuum regulator and is connected to a pressure sensor which converts exhaust system pressure into a

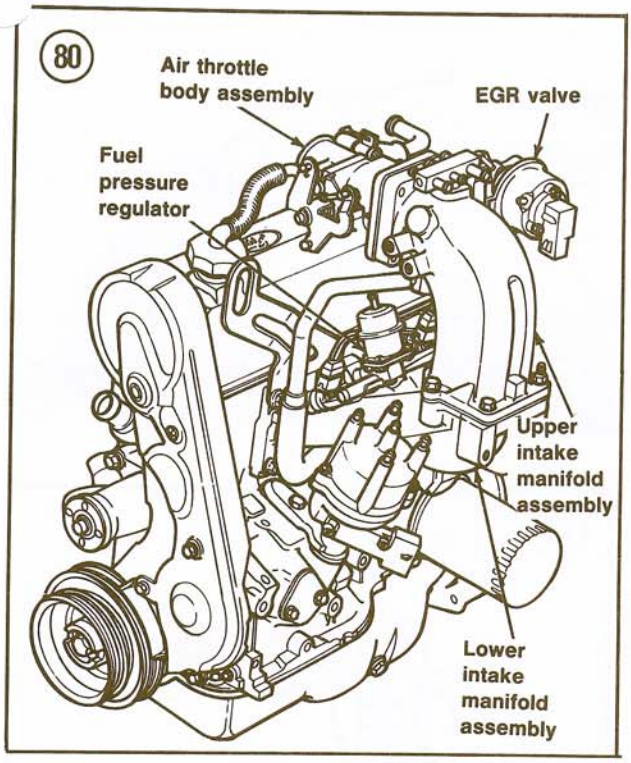

voltage signal sent to the EEC-IV microprocessor. The EGR valve is attached to the upper intake manifold; the pressure sensor is bracket-mounted under shields on the upper intake manifold.

EGR System Operational Test

CAUTION

If checking the EGR system on a hot engine, wear gloves to avoid a bad burn.

This procedure applies only to 4-cylinder carburetted engines. The EGR system on all other engines is controlled by the EEC-IV microprocessor. Correct system operation is dependent upon the microprocessor and/or several solenoid valves. Their testing is best left to a qualified technician.

1. Reach under the EGR valve and push on the diaphragm plate with an index finger. If the diaphragm does not move freely from open to closed position, replace the EGR valve.
2. Tee a vacuum gauge between the EGR valve and its vacuum line.
3. Place transmission in NEUTRAL (manual) or PARK (automatic). Start the engine and warm to normal operating temperature (upper radiator hose hot).
4. Open the throttle until the vacuum gauge reads at least 8 in. Hg vacuum.
5. Remove the vacuum line from the EGR valve. The diaphragm plate should move downward and engine speed should increase.
6. Reconnect the vacuum line. The diaphragm plate should move upward and engine speed should decrease.

NOTE

The diaphragm plate may vibrate during this procedure. This is normal and does not indicate a defective valve.

7. If the diaphragm plate and engine speed do not react as specified in Step 5 and Step 6, take the vehicle to your Ford dealer for further testing and diagnosis.

6

EGR VALVE

Cleaning and Inspection (4-cylinder Carburetted Engine Only)

1. Remove the air cleaner as described in this chapter.
2. Remove the EGR valve from the carburetor spacer.

CAUTION

Do not sandblast the valve or wash it with solvent.

3. Check the valve passages for carbon buildup. Light deposits may be cleaned with the careful use of a wire brush. If the deposits are heavy, replace the valve. Be sure to use a new gasket when installing the EGR valve.

Emission Maintenance Warning (EMW) Light System

All 1985 and later vehicles (except those first sold in California) are equipped with an EMW system. The system consists of an amber warning light marked "EMISSION" in the instrument panel and an inferred mileage sensor module mounted under the instrument panel. The lamp will illuminate and glow for 2-10 seconds each time the ignition is turned ON. This indicates the system is working properly.

The system is designed to alert the driver to service the emission systems at 60,000 miles. The sensor is an electronic timer which stores and calculates the length of time the ignition key is ON. When the sensor reaches 2,000 hours of key-ON operation, it activates the EMW light in the instrument panel.

Once the emission systems service has been performed, the sensor module must be reset to zero to extinguish the EMW light. The module will then repeat its function and illuminate the EMW light after another 2,000 hours of key-ON time have accumulated.

To reset the sensor module and extinguish the EMW light:

1. Turn the ignition switch OFF.
2. Locate the EMW module under the instrument panel. It can be identified by a sticker marked RESET on its side.
3. Insert a hex-head screwdriver (no larger than 5 mm) through the module RESET sticker.
4. Apply and hold approximately one pound of force on the screwdriver, then turn the ignition switch ON.
5. The EMW lamp will come on and glow as long as pressure is applied to the screwdriver. Maintain pressure for about five seconds, then remove the screwdriver. The EMW lamp should go out within 2-3 seconds.
6. Shut the ignition switch OFF. The module should now be reset.
7. Test module operation by turning the ignition key ON. The lamp should glow for approximately 2-10 seconds, then go out. If it remains on, shut the ignition OFF and repeat Steps 3-7.
8. Shut the ignition off.

Exhaust Gas Oxygen Sensor

An oxygen sensor (**Figure 81**) is installed in the exhaust manifold of all vehicles equipped with an MCU or EEC-IV system. The sensor has a permanently attached pig-tail and connector which should not be removed from the unit. Care is required in handling an oxygen sensor to assure proper operation. Keep the inline electrical connector and louvered end of the sensor free of grease or other contaminants and do not attempt to clean it with any type of solvent. Use of only a few tankfuls of leaded gasoline will destroy the sensor's sensitivity and result in driveability problems and poor gas mileage.

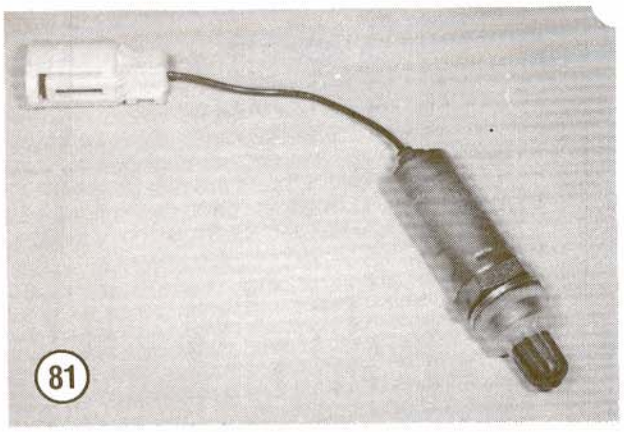

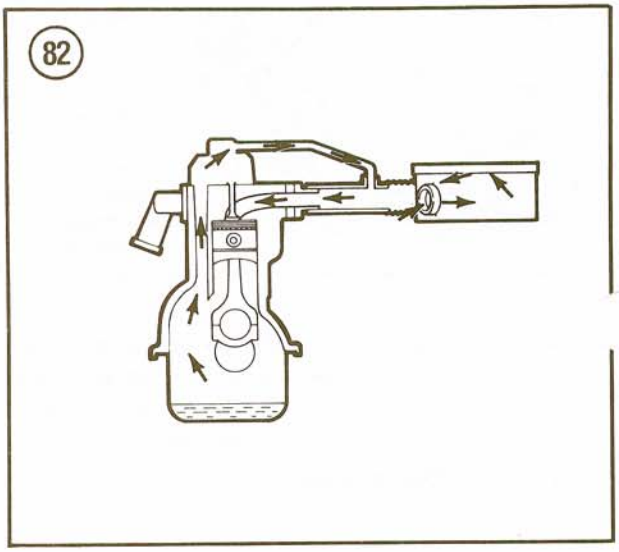

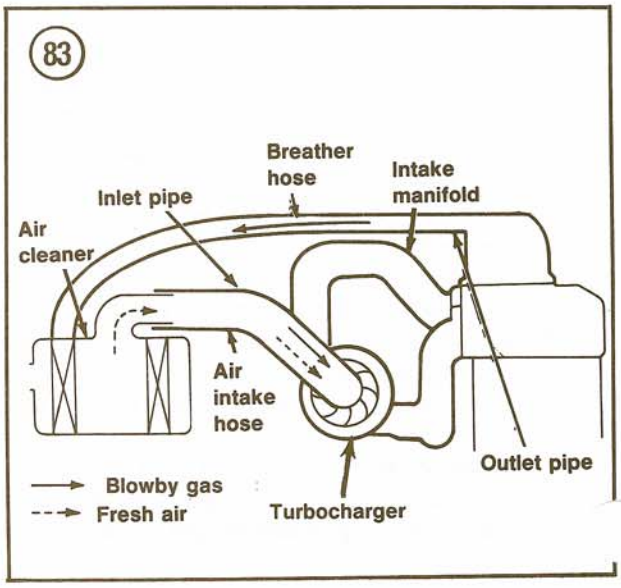

It may be difficult to remove the sensor if engine temperature is under 120° F (48° C). Use of excessive force can cause thread damage in the exhaust manifold.

1. Disconnect the sensor pig-tail connector from the wiring harness.
2. Disconnect any attaching hardware.
3. Remove the sensor with an appropriate size open-end wrench.

NOTE

If the sensor does not unscrew easily, spray the sensor thread area with a penetrating lubricant and let soak for 5 minutes, then try removing it.

4. If the same sensor is being installed, coat its threads with an electrically conductive anti-seize compound. New sensors are pre-coated and ready for installation.
5. Thread the sensor into the manifold by hand. If it does not screw into place easily, it may be cross-threaded. Remove and try again.
6. Tighten the sensor to 27-33 ft.-lb. (37-45 N•m).
7. Reconnect electrical connector to wiring harness and attach any hardware used. Make sure the silcone boot on the sensor does not contact anything that could cause it to melt.

Catalytic Converter

A catalytic converter is installed between the exhaust manifold and the muffler. Carbon monoxide and unburned hydrocarbons in the exhaust gas are oxidized as they pass through the converter. This process changes the harmful pollutants into harmless carbon dioxide and water. NOx is reduced to pure nitrogen. The converter requires no maintenance other than replacement of the heat shield, if damaged.

DIESEL ENGINE EMISSION CONTROL SYSTEMS

Crankcase Ventilation System

2.2L Diesel

A closed crankcase ventilation system is used with the 2.2L diesel engine. Crankcase vapors are drawn into the engine intake through a hose connecting the intake adapter to a baffle chamber in the valve rocker cover (**Figure 82**). The only service required is a periodic check of the hose for possible clogging and loose connections.

2.3L Turbo diesel

A closed crankcase ventilation system is used with the 2.3L turbo diesel engine. Crankcase vapors are drawn from the valve cover through the breather hose into the air cleaner. The vapors pass from the air cleaner through an air intake hose into the turbocharger. See **Figure 83**. The only service required is a periodic check of the hose for possible clogging and loose connections.

CHAPTER SEVEN

COOLING, HEATING AND AIR CONDITIONING SYSTEMS

COOLING, HEATING AND AIR CONDITIONING SYSTEMS

The cooling system used on all vehicles consists of a radiator, water pump, cooling fan, thermostat, coolant recovery tank, temperature sensors and connecting hoses. Gasoline models and the 2.2L diesel use a crossflow radiator; the 2.3L turbo diesel uses a downflow radiator. The radiator is mounted on the engine compartment front body support panel. The centrifugal water pump on all engines is mounted to the block and is coupled directly with the cooling fan.

The heater is a hot water type which circulates coolant through a small radiator (heater core) under the instrument panel. Air is taken in through cowl vents and forced through the radiator to distribute heat.

The air conditioning system is a cycling clutch (intermittent) fixed-orifice refrigerant type and uses outside air at all times, except during MAX A/C operation.

This chapter includes service procedures for the radiator, water pump, thermostat, heater and air conditioner. Cooling system flushing procedures are also described. **Table 1** and **Table 2** are at the end of the chapter.

COOLING SYSTEM

All vehicles (except the 2.3L turbo diesel) use a crossflow radiator (**Figure 1**) mounted on the engine commpartment front body support panel. Header tanks at each end of the radiator provide uniform coolant distribution. The outlet port (lower hose connection) connects to the wate pump inlet port. The inlet port (upper hose connection) connects to the thermostat housing elbow.

The 2.3L turbo diesel uses a downflow radiator (**Figure 2**) mounted on the engine compartment front body support panel. Header tanks at the top and bottom of the radiator provide uniform coolant distribution. The outlet port on the lower tank connects to the water pump inlet port. The inlet port on the upper tank connects to the thermostat housing elbow.

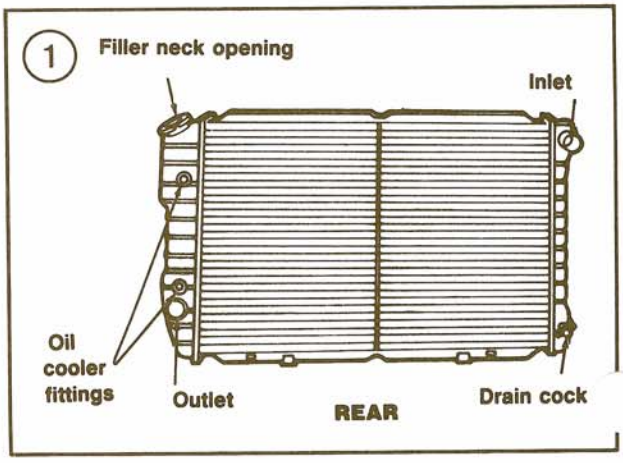

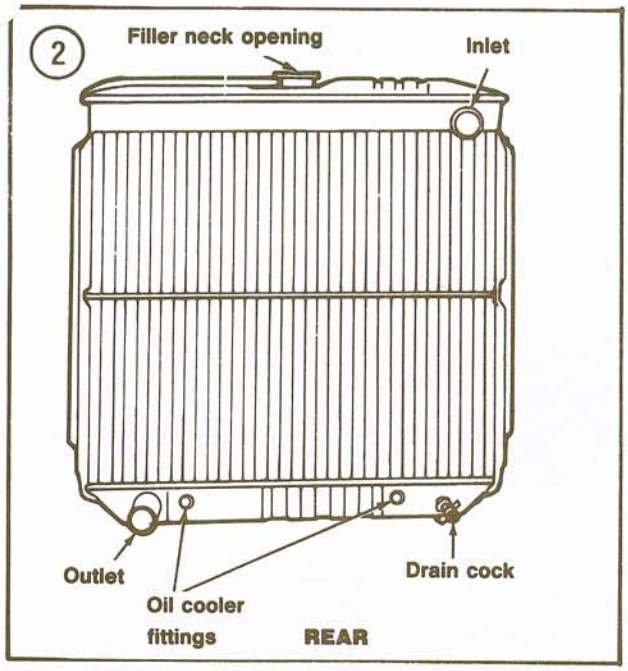

The recommended coolant is a 50/50 mixture of ethylene glycol antifreeze and low mineral content vater, which provides a lower freezing point and higher boiling point than water alone.

The water pump circulates the coolant through the cooling system when the engine is running. When the engine is cold, the coolant is trapped inside the engine water jacket by the thermostat, which is located in the mouth of the hose leading to the radiator inlet tank. The thermostat remains closed until the coolant heats up to operating temperature. It then opens and the coolant flows through the hose into the radiator inlet tank. The coolant passes through the radiator tubes to the outlet tank, where it flows through the radiator outlet hose to the water pump inlet to start the cycle over again.

The cooling fan draws air through the radiator and removes excess heat from the coolant. Rigid or viscous clutch fans are used, depending upon the engine/transmission application. The viscous clutch fan uses a silicone-filled clutch coupling that automatically increases or decreases the fan speed according to temperature to provide proper engine cooling under all conditions.

Some models have a shroud attached to the radiator to funnel air through the radiator more efficiently.

Hoses route the coolant to the heater core and radiator. A water valve in installed in the heater core inlet hose so that coolant flow to the heater can be shut off if the heater is not required.

COOLING SYSTEM FLUSHING (4-CYLINDER)

The recommended coolant is a 50/50 mixture of water and ethylene glycol antifreeze (less than a 30 percent concentration of antifreeze can result in engine corrosion and overheating). Ford recommends that only an antifreeze designated as ESE-M97B44-A such as Ford Cooling System Fluid (part No. E2FZ-19549-A) be used.

Recommended coolants are designed to prevent corrosion of the aluminum cylinder head (diesel engine) and radiator (gasoline engine). The use of non-approved antifreeze can cause a thermo-chemical reaction.

The radiator should be drained, flushed and refilled at intervals specified in Chapter Three. Engine cooling system flushing procedures must include a separate back-flushing of the heater or air conditioning system heater core after flushing of the engine cooling system. This is necessary to prevent a possible clogging of the heater core tubes and a reduction of coolant flow through the heater core.

NOTE

Under no circumstances should a chemical flushing agent be used. Flush the cooling system with clear water only.

1. Coolant can stain concrete and harm plants. Park the vehicle over a gutter or similar area.
2. Remove the radiator cap. Open the draincock at the lower rear corner of the radiator (**Figure 1**).
3. Remove the engine block drain plug.
4. Let the cooling system drain. Close the draincock. Coat the block drain plug theads with Ford Pipe Sealant with Teflon (part No. D8AZ-19554-A) or equivalent and reinstall.
5. Remove the thermostat as described in this chapter. Temporarily reinstall the thermostat housing.
6. Disconnect the top radiator hose from the radiator (**Figure 2**). Disconnect the bottom hose from the water pump inlet.
7. Insert a garden hose into the top radiator hose. This does not have to be a positive fit, as long as most of the water enters the radiator hose. Run water into the top hose until clear water flows from the top fitting.

8. Disconnect the coolant recovery tank hoses. Remove and empty the tank. Flush the recovery tank first with soapy water, then clean water. Drain the tank and reinstall. Connect the hoses. See **Figure 3** (diesel) or **Figure 4** (gasoline).
9. Reconnect the hoses to the water pump inlet and the radiator.
10. Disconnect the heater core outlet hose at the water pump. Disconnect the heater core inlet hose at the thermostat housing fitting. See **Figure 5**.
11. Connect the garden hose to the heater core outlet hose. This does not have to be a positive fit, as long as most of the water enters the heater hose. If there is a water valve in the heater core inlet hose, make sure the valve is open (no vacuum present). Turn the garden hose water supply on and off several times to produce a surging action, then allow full water pressure to flow for 5 minutes.
12. If equipped with a water valve in the heater core inlet hose, apply vacuum to the water valve vacuum motor to make sure it operates properly and closes with no water leakage. Replace the valve if it does not operate properly.
13. Remove the garden hose and reconnect the heater core inlet and outlet hoses to their respective fittings (**Figure 5**). Reinstall the thermostat.
14. Pour 3 1/2 quarts of recommended antifreeze into the radiator. Add sufficient water to bring the coolant level to within 1 1/2 in. of the filler neck cap seal (**Figure 6**).
15. Add enough coolant to the recovery tank to bring its level up to the "FULL" mark. Install the recovery tank cap.
16. Start and run the engine at fast idle until the upper radiator hose (gasoline engine) or lower radiator hose (diesel engine) becomes hot (thermostat open). Return the engine to normal idle.
17. Recheck the coolant level in the radiator. If necessary, add sufficient coolant to bring the level back to within 1 1/2 in. of the filler neck cap seal (**Figure 6**). Install the radiator cap and check for leaks at the hose connections, draincock and block drain plug.

COOLING SYSTEM FLUSHING (V6)

The 2.8L V6 thermostat housing may be located on the intake manifold (high-mount) or on the water pump cover (low-mount). The 2.9 V6 thermostat housing is bolted to the front of the intake manifold. The 2.8L (high-mount) and 2.9L V6 are serviced as described for 4-cylinder models. The 2.8L V6 with a low-mount thermostat housing must be bled when refilling.

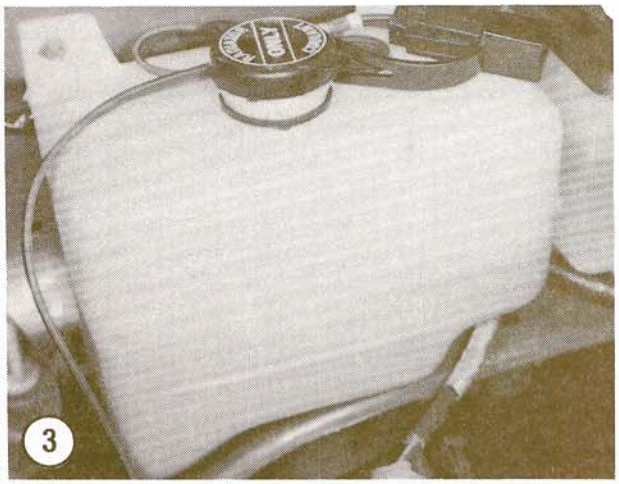

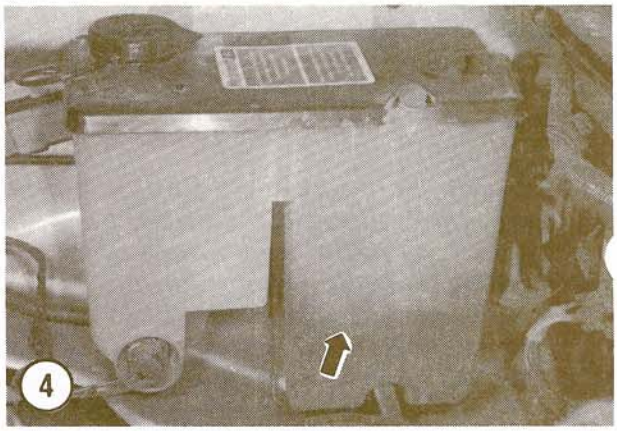

1. Drain and flush the cooling system as described for 4-cylinder models.
2. Disconnect the upper radiator hose at the radiator.
3. Pour 3 qt. of coolant into the engine through the upper radiator hose. When the hose is full, reconnect it to the radiator.
4. Pour coolant into the radiator filler neck until the fluid level is 1-1 1/2 in. below the filler neck.
5. Install and tighten the radiator cap, then back it off to the first detent or pressure relief position.
6. Start the engine and run at fast idle until the lower radiator hose is warm.
7. Shut the engine off. Carefully remove the radiator cap and add sufficient coolant to bring the level back to within 1-1 1/2 in. of the filler neck.
8. Install and tighten the radiator cap.

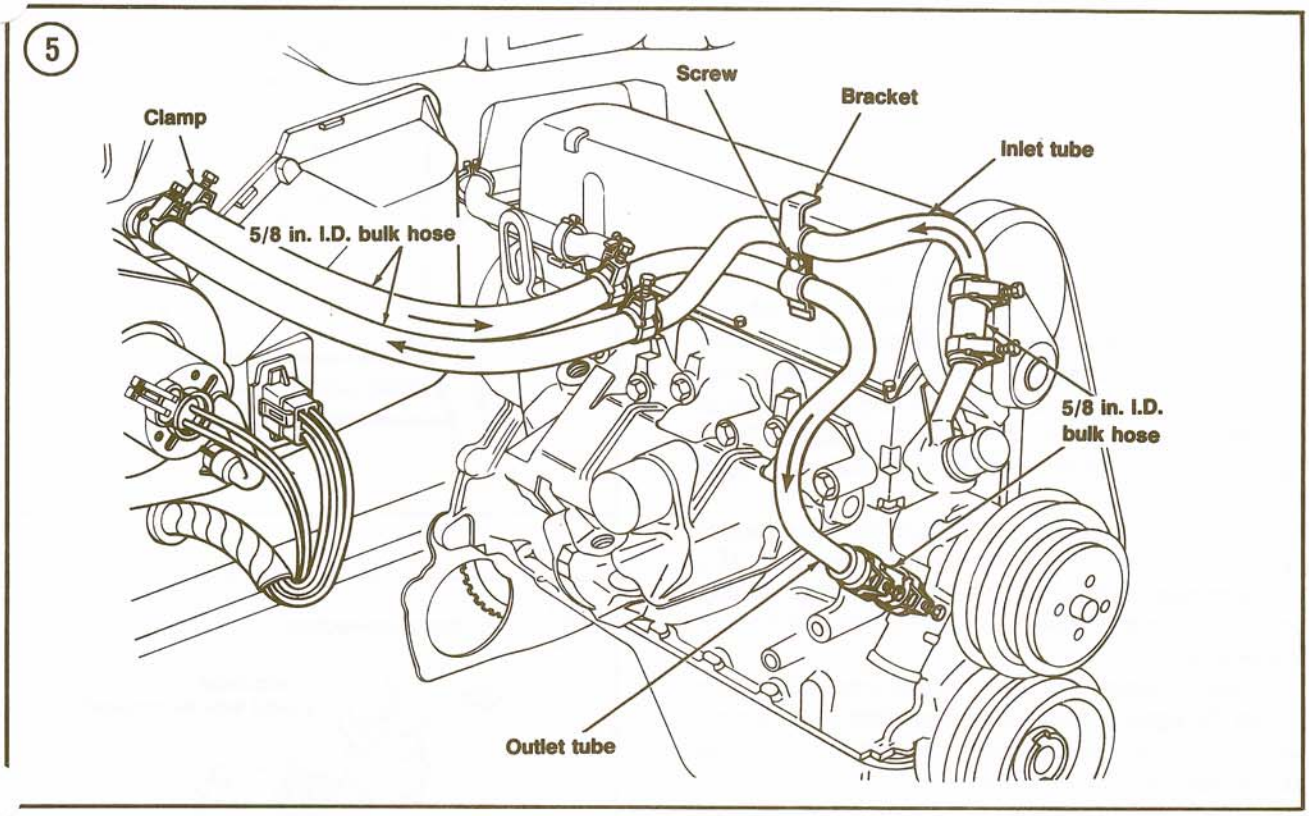

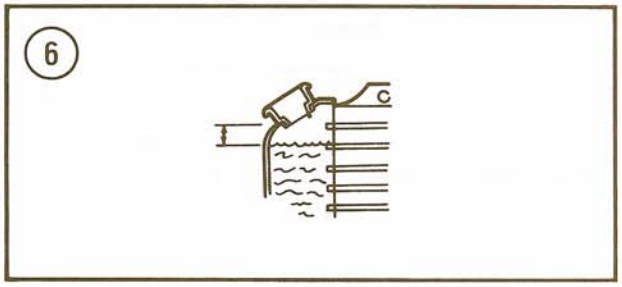

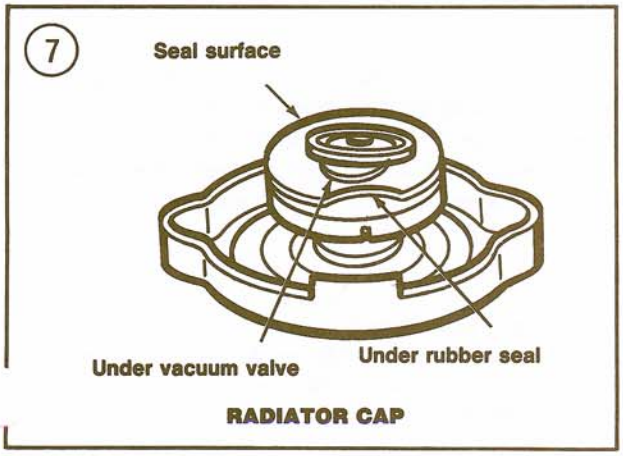

RADIATOR CAP

COOLING SYSTEM CHECKS

1. Visually inspect the cooling system and heater hoses for signs of cracking, checking, excessive swelling or leakage.
2. Check that all hose support brackets are properly positioned (if used) and that the hoses are correctly installed in their brackets.
3. Inspect the front and rear of the radiator core and tanks, all seams and the radiator draincock for signs of seepage or leaks.
4. Make sure all hose connections are tight and in good condition. Check the hoses carefully at their clamps for cuts or weakness. Overtightening strap-type clamps can cut the outer surface of a hose.

WARNING
Perform Step 5 with the engine cold.

5. Remove the radiator pressure cap. Check the rubber cap seal surfaces for tears or cracks. Check for a bent or distorted cap. Raise the vacuum valve and rubber seal and rinse the cap under warm tap water to flush away any loose rust or dirt particles. See **Figure** 7.

7

6. Inspect the filler neck seat and sealing surface (**Figure 8**) for nicks, dents, distortion or contamination. Wipe the sealing surface with a clean cloth to remove any rust or dirt. Install the cap properly.
7. Start the engine and warm to normal operating temperature. Shut the engine off and carefully feel the radiator. Crossflow radiators should be hot along the left side and warm along the right side, with an even temperature increase from right to left. Cold spots indicate obstructed radiator sections. Check downflow radiators the same way. The radiator should be hot at the top and warm at the bottom, with an even heat increase from bottom to top. Any cold spots indicate clogged areas.
8. Restart the engine and squeeze the upper radiator hose to check water pump operation. If a pressure surge is felt, the water pump is functioning properly. If not, checked for a plugged vent hole in the pump.
9. Visually inspect the area underneath the water pump for signs of leakage or corrosion. A defective water pump will usually leak through the vent hole at the bottom of the pump.
10. Check the crankcase oil dipstick for signs of coolant in the engine oil. On automatic transmission models, check the coolant for signs of transmission fluid leaking from the heat exchanger (oil cooler).
11. Have the system pressure-tested. This test requires the use of a reliable pressure tester and can be performed quickly and economically by your dealer or a radiator shop. If you purchase a tester yourself, follow the manufacturer's instructions for its use. The test should be performed if frequent additions of coolant are necessary to keep the cooling system topped up and your radiator is known to be in good condition. Small cooling system leaks are not easy to locate; the hot coolant evaporates as fast as it leaks out, preventing the formation of tell-tale rusty or grayish-white stains.

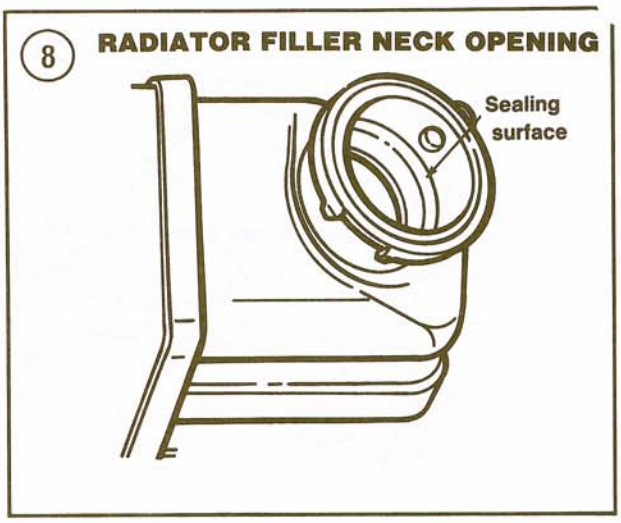

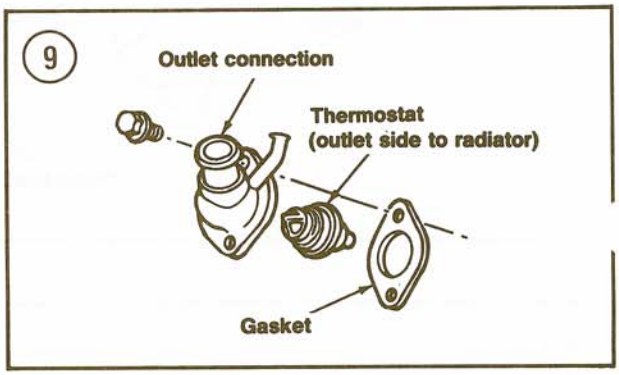

THERMOSTAT (4-CYLINDER)

The thermostat blocks coolant flow to the radiator when the engine is cold. As the engine warms up, the thermostat gradually opens, allowing coolant to circulate through the radiator. Diesel engines use a bypass thermostat. When coolant temperature is low, the thermostat blocks flow to the radiator and opens a bypass to recirculate coolant within the engine. As the coolant warms, the thermostat closes the bypass and allows flow to the radiator.

CAUTION

Operating the diesel engine without a thermostat will cause the engine to overheat and may result in engine damage.

The 195° F thermostat used with all gasoline engines should start to open at approximately 188° F and be fully open at about 206° F. The bypass thermostat used with diesel engines should start to open at approximately 190° F and be fully open at about 212° F.

NOTE

Some high-altitude engines may use a thermostat with a different temperature range. Check the thermostat when removed to determine its opening point; the heat range is stamped on the thermostat flange.

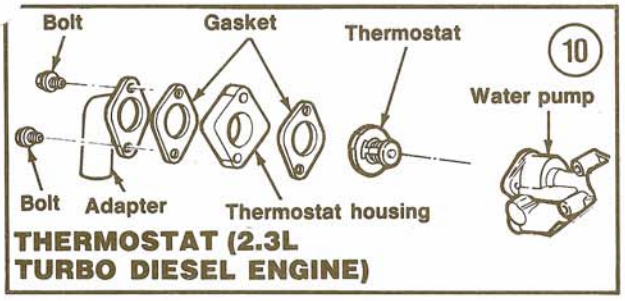

THERMOSTAT (2.3L TURBO DIESEL ENGINE)

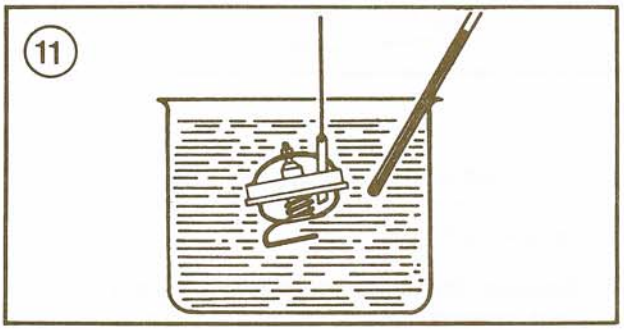

Removal and Testing

Refer to **Figure 9** (gasoline and 2.2L diesel) or **Figure 10** (2.3L turbo diesel) for this procedure.

1. Make sure the engine is cool. Disconnect the negative battery cable on gasoline models. Disconnect both negative battery cables on diesel models.
2. Place a clean container under the radiator draincock. Remove the radiator cap and open the draincock. Drain about two quarts of coolant from the radiator. If the coolant is clean, save it for reuse.
3. Gasoline engines—disconnect the heater return hose at the thermostat housing.

4A. 2.3L diesel engines:

a. Unclamp and disconnect the radiator inlet hose at the adapter.
b. Remove the 2 bolts holding the adapter to the thermostat housing. Remove the adapter and discard the gasket.
c. Remove the 2 bolts holding the thermostat housing to the water pump. Remove the housing and thermostat. Remove and discard the gasket.

4B. All others:

a. Remove the thermostat housing bolts.
b. Lift the housing and upper radiator hose clear of the engine.
c. Remove and discard the housing gasket.
d. Rotate the thermostat counterclockwise and remove it from the housing.

5. Pour some of the coolant into a container that can be heated. Submerge the thermostat in this coolant and suspend a thermometer as shown in **Figure 11**.

NOTE

Support the thermostat and thermometer with wire so they do not touch the sides or bottom of the pan.

6. Heat the coolant until the thermometer has opened fully. Check the temperature reading on the thermometer. It should be appproximately 206° F (gasoline engine) or 212° F (diesel engine).

7A. On gasoline engine thermostats, measure the valve opening. It should be 1/4 in. (6.35 mm).

7B. With diesel engine thermostats, measure the bypass valve lift. It should be 0.315 in. (8 mm) or greater.

8. If the thermostat does not fully open in Step 6 or does not meet the opening specification in Step 7, discard it and install a new thermostat.
9. Remove the thermostat from the water and let it cool to room temperature.
10. Gasoline engine—Hold the thermostat close to a light bulb and check for leakage. If light can be seen around the valve, the thermostat is probably defective.

Installation

Refer to **Figure 9** (gasoline and 2.2L diesel) or **Figure 10** (2.3L turbo diesel) for this procedure.

1. If a new thermostat is being installed, test it as described in the preceding section.
2. Clean the thermostat housing and cylinder head mating surfaces with a putty knife to remove all gasket residue. On 2.3L diesel engines, also clean the adapter and water pump mating surfaces.

3A. 2.3L turbo diesel:

a. Seat the thermostat in the water pump recess.
b. Install the thermostat housing with a new gasket and tighten bolts to specifications (**Table 1**).
c. Install the adapter with a new gasket and tighten bolts to specifications (**Table 1**).
d. Reconnect the inlet hose to the adapter and tighten the clamp securely.

3B. All others:

a. Coat a new gasket with water-resistant sealer and install on the cylinder head.

b. Install the thermostat in the housing with its outlet side facing the radiator. See **Figure 9** (typical).
c. On gasoline engines, depress and rotate the thermostat clockwise until it locks in place (**Figure 12**). The full width of the heater outlet tube opening should be visible within the thermostat port in the housing to assure maximum coolant flow to the heater.
d. Install the thermostat housing assembly to the cylinder head.
e. Tighten the housing bolts to specifications (**Table 1**).
f. On gasoline engines, reconnect the heater return hose to the thermostat housing outlet.

4. Pour the drained coolant back into the radiator and install the cap.
5. Reconnect the negative battery cable(s).
6. Start the engine and check for leaks.
7. Shut the engine off, remove the radiator cap and check the coolant level. Top up as required and reinstall cap.

THERMOSTAT (V6)

The 2.8L V6 thermostat housing may be located on the intake manifold (high-mount) or on the water pump cover (low-mount). The 2.9L V6 thermostat housing is bolted to the front of the intake manifold. The V6 thermostat is serviced as described for 4-cylinder models. The 2.9L V6 thermostat has a seal bonded to it; the thermostat should be replaced if the seal is not bonded securely. The 2.8L V6 with a low-mount thermostat housing must be bled when refilling.

RADIATOR

Removal/Installation

Refer to **Figure 13** (typical) for this procedure.
1. Make sure that the engine is cool enough to touch comfortably.
2. Coolant can stain concrete and harm plants. Park the vehicle over a gutter or similar area. Place a clean container under the draincock.
3. Open the draincock at the lower rear corner of the radiator. See **Figure 1** or **Figure 2**.
4. When the coolant recovery tank is empty, remove the radiator cap to promote faster draining.

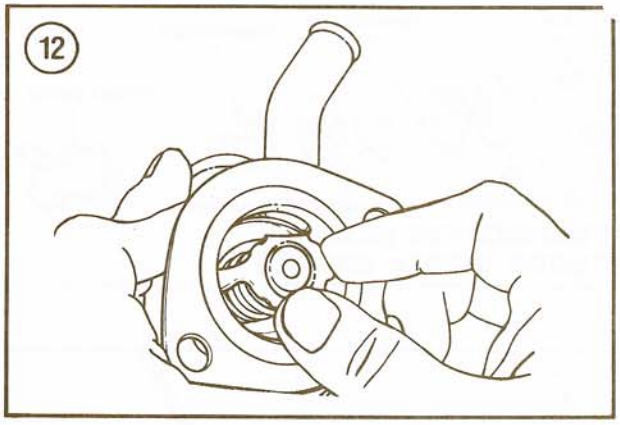

NOTE
Air conditioned models are equipped with a full shroud; non-air conditioned models use a fingerguard.

5. Remove the radiator overflow tube from the coolant recovery tank. Disconnect the tube from the shroud or fingerguard (if attached) and remove it from the radiator.

NOTE
The fingerguard does not have to be removed for radiator removal unless a new radiator will be installed.

6. Remove the 2 upper retaining screws from the shroud. Lift the shroud up and out of its lower retaining clips and drape it over the fan.
7. Disconnect the upper and lower radiator hoses at the radiator.

CAUTION
Hold the connector with a wrench and use a second wrench to loosen the tube nut in Step 8. This will prevent damage to the connector.

8. If equipped with an automatic transmission, disconnect the oil cooler lines at the radiator fittings. Cap the lines and plug the fittings to prevent leakage.
9A. 2.3L turbo diesel—Remove the 2 screws holding each side of the radiator to its support.
9B. All others—Remove the radiator hold-down bracket screws and brackets, if used. If brackets are not used, remove the 2 upper attaching screws.
10. Tilt the radiator toward the engine about one inch and lift directly up, clearing the lower radiator supports and cooling fan. Remove the radiator from the engine compartment.

13

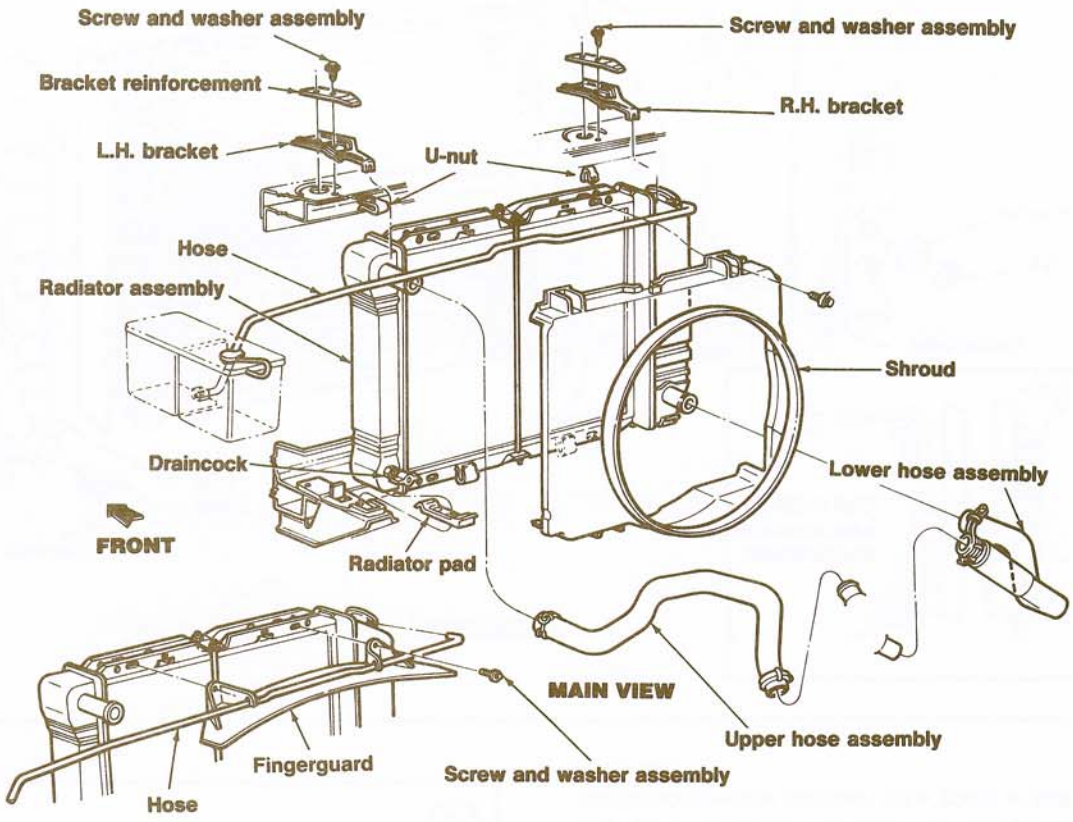

14

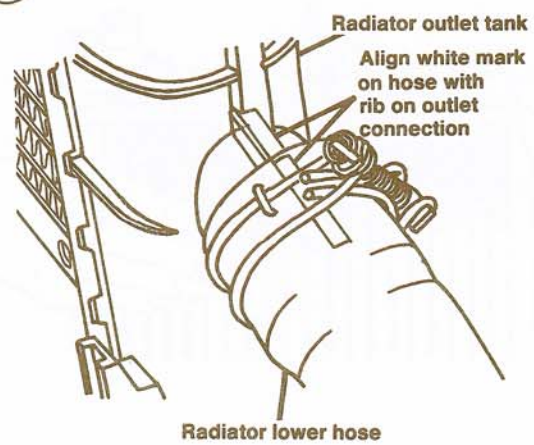

11. Lift the shroud off the cooling fan and remove from the engine compartment.

12. Remove the lower radiator support pads (if used) and inspect for wear or damage. Replace as required.

13. Installation is the reverse of removal. Make sure the lower support pads are properly positioned (if used) and engage the radiator as it is lowered into place. Make sure the stripe on the lower radiator hose aligns with the rib on the tank outlet (if so marked). See **Figure 14**. Tighten all fasteners to specifications (**Table 1**). Reconnect the negative battery cable(s) and pour all but one pint of the drained coolant into the radiator filler neck. Pour the remaining coolant into the coolant recovery reservoir. If the coolant is dirty or rusty, discard and install new coolant as described in *Cooling System Flushing* in this chapter.

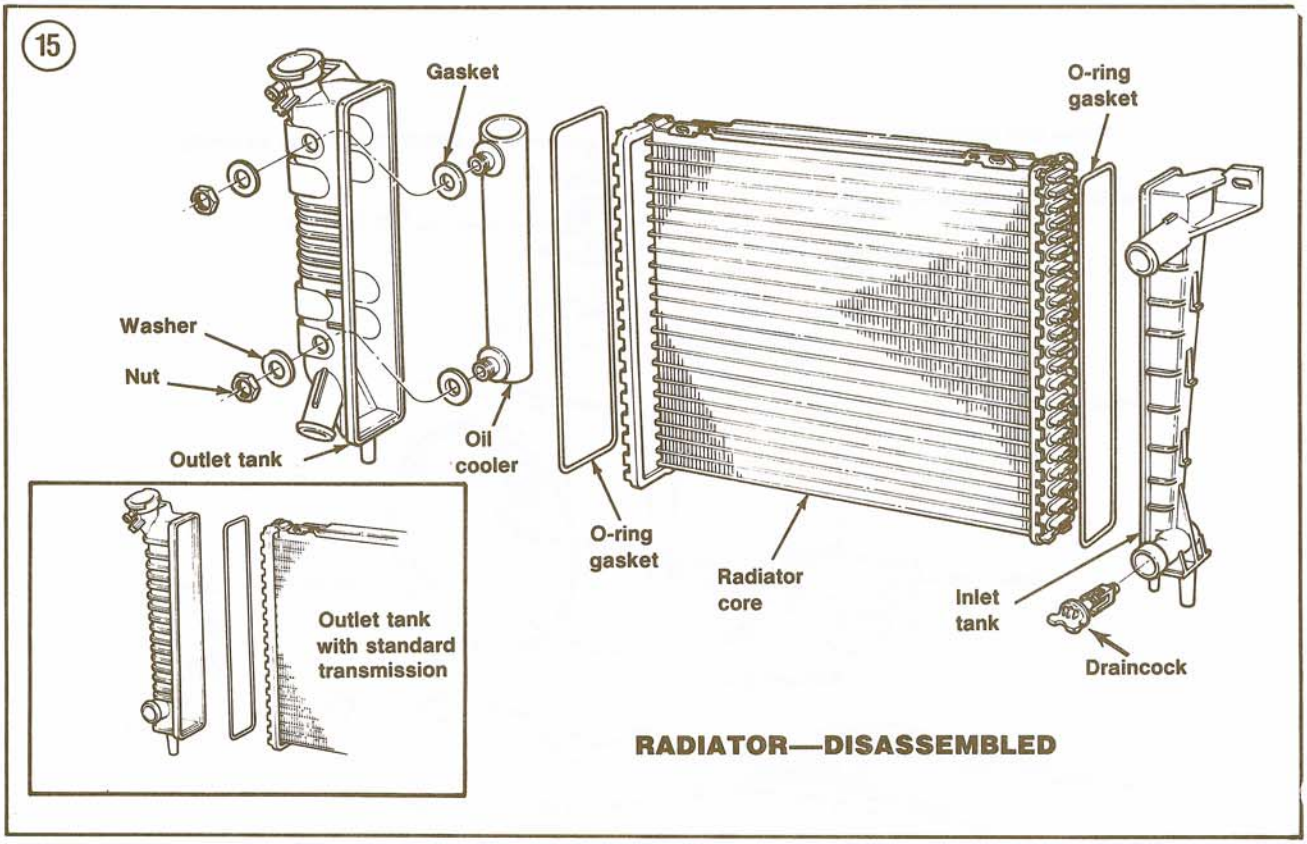

radiator core is fitted with molded glass-filled nylon end tanks which incorporate radiator and fan shroud mounting brackets. Each end tank is attached to the core header by metal tabs. An O-ring gasket between the tank and header acts as a seal. See **Figure 15** (typical).

NOTE

A small section of the header side may bend as the tabs are opened in the following procedure. A slight deformation of the header side is not harmful, as long as the tabs are opened just enough to permit tank removal. Such deformation will generally return to a normal position once the tabs are recrimped when the tank is installed.

1. Remove the radiator as described in this chapter.
2. Insert a screwdriver tip between the tank and the end of the header tab, as shown in **Figure 16**. Carefully pry each tab away from the tank edge only enough for tank removal.
3. Separate the tank and header. Remove the O-ring gasket from the header.

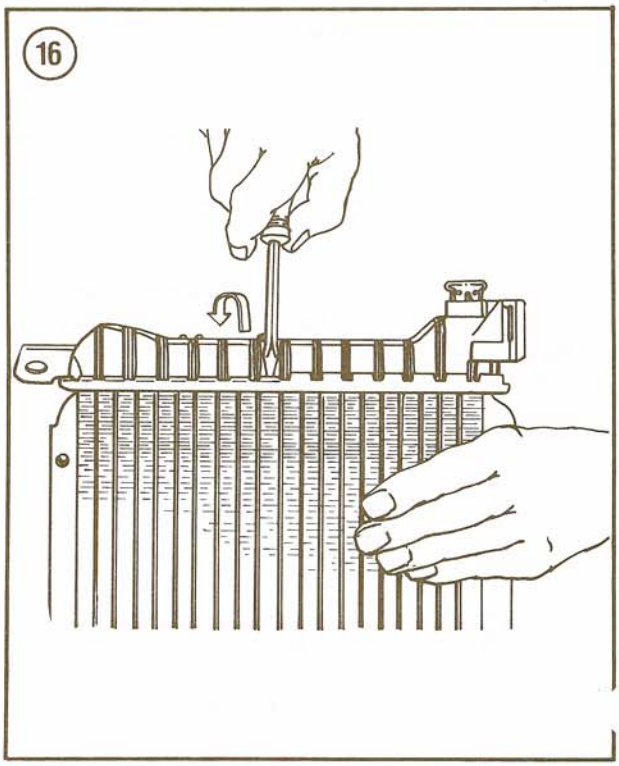

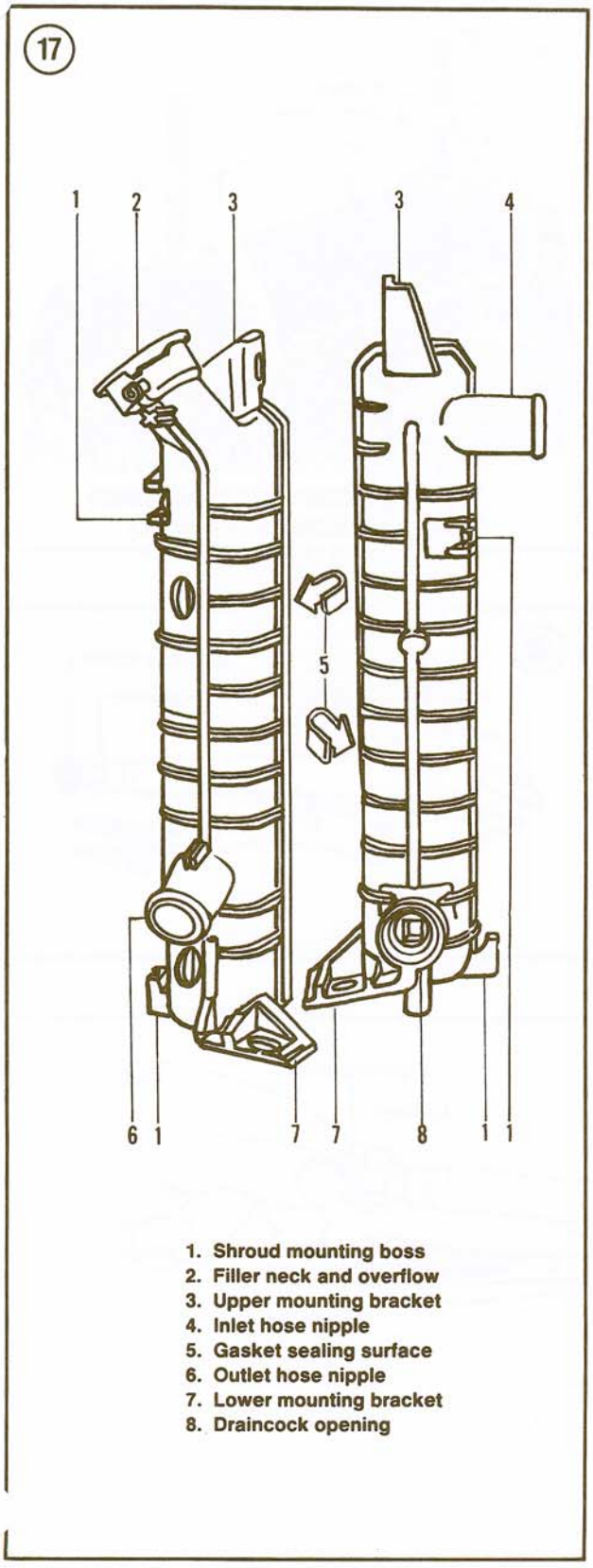

1. Shroud mounting boss
2. Filler neck and overflow
3. Upper mounting bracket
4. Inlet hose nipple
5. Gasket sealing surface
6. Outlet hose nipple
7. Lower mounting bracket
8. Draincock opening

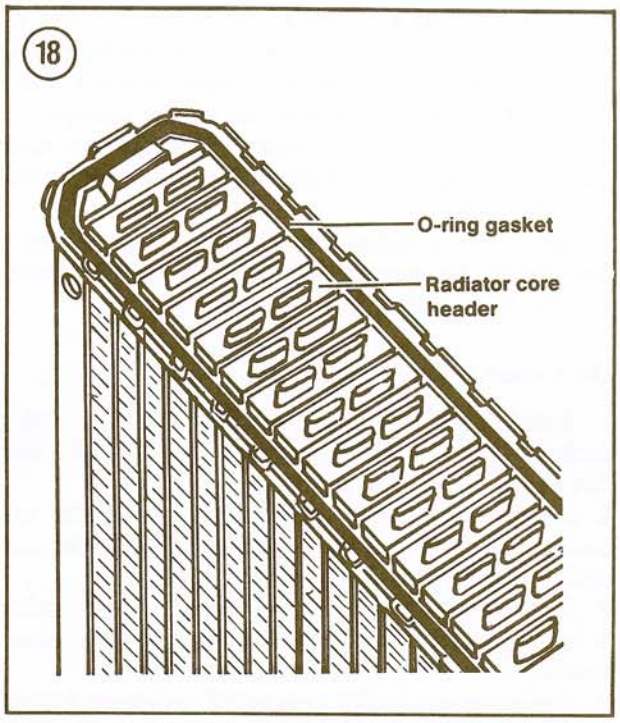

Radiator Tank and Core Inspection

1. Examine each radiator tank for cracks or damage to the mounting brackets, shroud bosses, gasket sealing surface and hose fitting (**Figure 17**). Replace any damaged tank.
2. Check the core for missing header tabs. If any tab is gone, replace the core.

Radiator Tank Installation

1. Clean the gasket surface of the radiator core header.
2. Dip a new O-ring gasket in coolant and install in the core header grooves (**Figure 18**). Make sure the O-ring is not twisted when installed.
3. If the outlet tank of an automatic transmission model is being replaced, transfer the oil cooler to the new tank as described in this chapter.
4. Fit the tank to the core header with the top and bottom of the new tank aligned with the other tank.
5. Install 2 Barbee No. 200 crimp clamps on the heater as shown in **Figure 19** and tighten just enough to compress the O-ring gasket.
6. Fit a hex nut on a pair of locking pliers as shown in **Figure 20**. Close and lock the plier jaws. Turn the adjusting screw to fit the jaws around the shank of a 13/32 in. drill bit (**Figure 21**). Tighten the hex nut to lock the jaws in place. Remove the drill bit.

7. Using the locking pliers prepared in Step 6, squeeze the header tabs down against the lip of the tank base by rotating the pliers upward toward the tank. Some tabs will be blocked by the clamps.
8. Remove the crimp clamps and squeeze the tabs that were behind the clamps down into place with the other tabs.
9. Leak test the radiator at 21 psi. Minor seal leaks can usually be corrected by recrimping the header tabs on both sides of the apparent leak.

Oil Cooler Replacement

1. Remove the radiator and separate the outlet tank from the core header as described in this chapter.
2. Remove the nuts and washers from the oil cooler inlet and outlet connections. Lift the oil cooler from the outlet tank.
3. If the cooler is defective, discard it. If the cooler is to be reused, remove and discard the neoprene gaskets from the inlet/outlet connections.
4. Replacement is the reverse of removal. Install new gaskets on the cooler to be used. Start the cooler retaining nuts by hand, then apply water-resistant sealer to the exposed threads. Tighten the cooler retaining nuts to specifications (**Table 1**).

Draincock Replacement

1. Remove the radiator as described in this chapter.

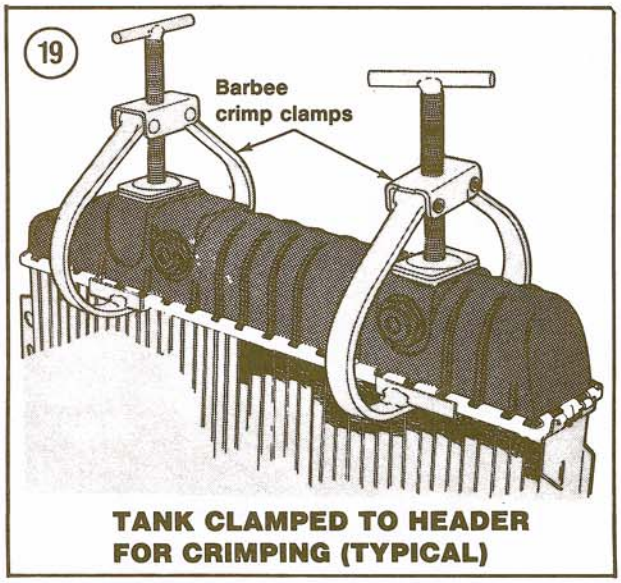

TANK CLAMPED TO HEADER FOR CRIMPING (TYPICAL)

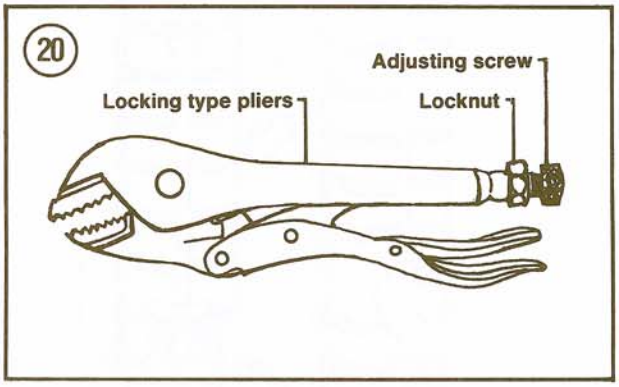

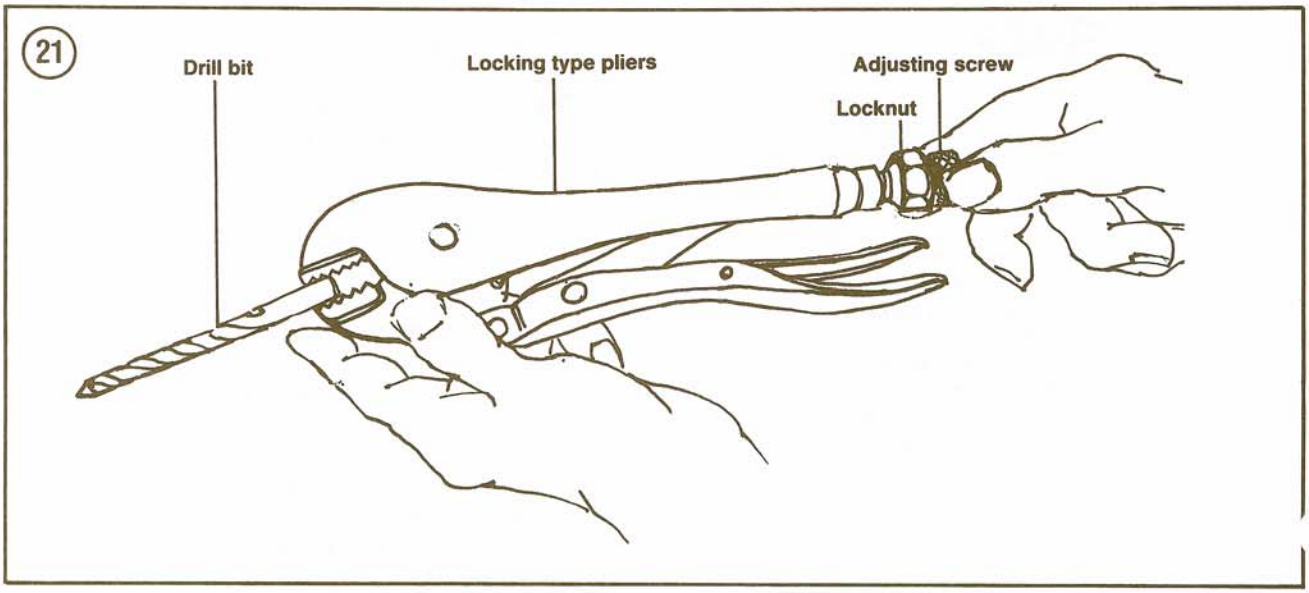

2. Turn the draincock until fully open and pull the stem from the radiator tank and draincock body. See **Figure 22.**
3. Squeeze the sides of the draincock body together with pliers and remove from the inlet tank opening.
4. To reinstall, squeeze the sides of the draincock body together with pliers and insert in the inlet tank opening until it locks in place.
5. Fit the stem into the body opening and push until the stem tabs engage with the draincock body. Turn the draincock stem until it is fully closed.
6. Reinstall the radiator as described in this chapter.

Radiator Hose Replacement

Hose life is rated by manufacturers at 2 years. It is a good idea to replace *all* cooling system hoses at this interval, even if they appear to be good. This will prevent an unnecessary and inconvenient roadside breakdown and possible engine damage resulting from a ruptured hose and subsequent overheating.

Replace any hoses that are cracked, brittle, nildewed or very soft and spongy. If a hose is in doubtful condition, but not definitely bad, replace it to be on the safe side. Even though the hoses are easily accessible, this will avoid the necessity of a roadside repair.

Always replace a radiator hose with the same type removed. Plain or pleated rubber hoses do not have the same strength as reinforced molded hoses. Check the hose clamp condition and install new clamps with a new hose if necessary.

1. Place a clean container under the radiator draincock. Remove the radiator cap and drain about one quart of coolant when replacing an upper hose. Completely drain the coolant to replace a lower hose. If the coolant is clean, save it for reuse.
2. Loosen the clamp nut or screw at each end of the hose. Grasp the hose and twist it off the connection with a pulling motion.
3. If the hose is corroded to the fitting, cut it off with a sharp knife at a point about one inch beyond the end of the radiator fitting. Remove the clamp and slit the remaining piece of hose lengthwise, then peel it off the fitting.
4. Clean any corrosion from the fitting with sandpaper, then rinse the fitting to remove any particles.

CAUTION

Do not use oil or grease as a lubricant to assist in hose replacement. It may cause the rubber to deteriorate.

5. Position the new clamps at least 1/4 in. from each end of the new hose. Wipe the inside diameter

22

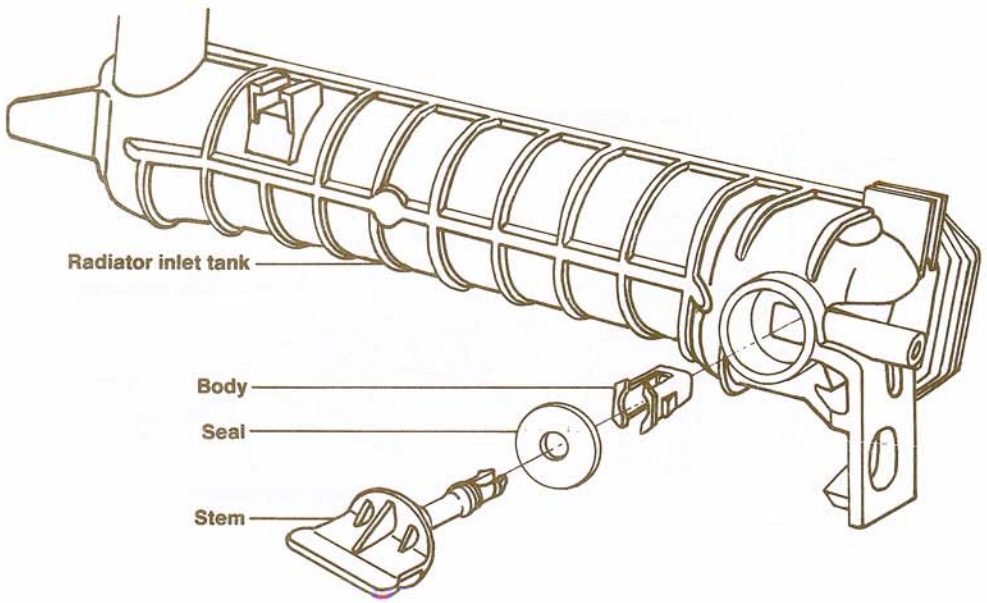

of the hose and the outside diameter of the fitting with dishwasher liquid. Install the hose end on the fitting with a twisting motion.

CAUTION

To prevent hose or clamp damage, do not overtighten.

6. Position the clamps for easy access with a screwdriver or cap driver and tighten each clamp to specifications (**Table 1**). Recheck them for tightness after operating the vehicle for a few days.
7. Fill the radiator with the coolant removed in Step 1. Start the engine and operate it for a few minutes, checking for signs of leakage around the connection. Recheck the coolant level and top up, if necessary.

COOLING FAN

Non-air conditioned models use a fan and spacer arrangement (**Figure 23**). Air conditioned models use a fan and viscous clutch (**Figure 24**).

Removal/Installation

4-cylinder gasoline and 2.2L diesel

Refer to **Figures 23-25** as required for this procedure.

1. Disconnect the overflow tube from the radiator and fan shroud or fingerguard.
2. Remove the shroud or fingerguard attaching screws:
   a. Remove fingerguard, if so equipped.
   b. Drape the shroud over the fan, if so equipped.

3A. On non-air conditioned models, remove 4 bolts from fan hub. Remove fan and spacer from water pump pulley.
3B. On air conditioned models, remove 4 screws from fan clutch assembly. Remove fan and clutch from water pump pulley.
4. Check fan for breaks, cracks, loose rivets or broken welds. Replace fan if any defect is noted.
5. If fan is equipped with viscous clutch, remove 4 screws holding fan to clutch.
6. Installation is the reverse of removal. Tighten all fasteners to specifications (**Table 1**).

V6 and 2.3L turbo diesel

Refer to **Figure 26** (V6) or **Figure 27** (2.3L turbo diesel) for this procedure.

1. Remove the fan shroud or fingerguard.

CAUTION

The nut to be removed in Step 2A and Step 2B has a left-hand thread and must be turned clockwise to remove it.

(23) **COOLING FAN (WITHOUT AIR CONDITIONING)**

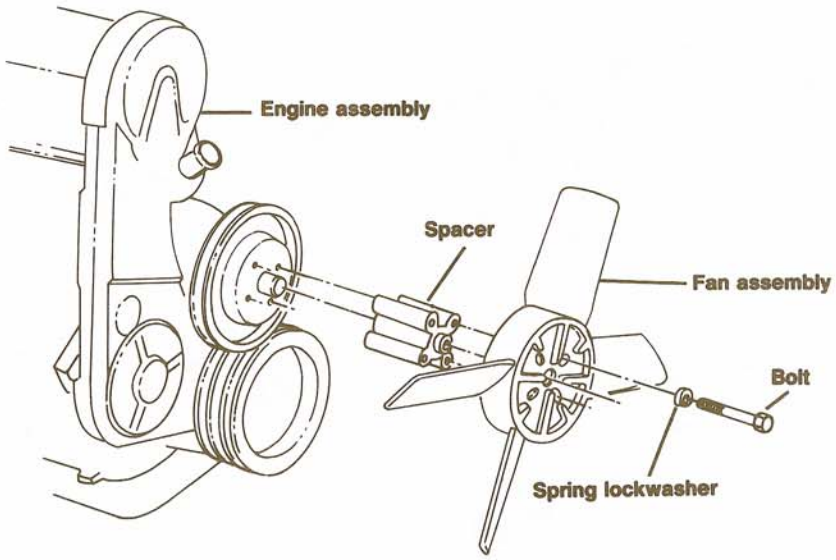

24

COOLING FAN (WITH AIR CONDITIONING)

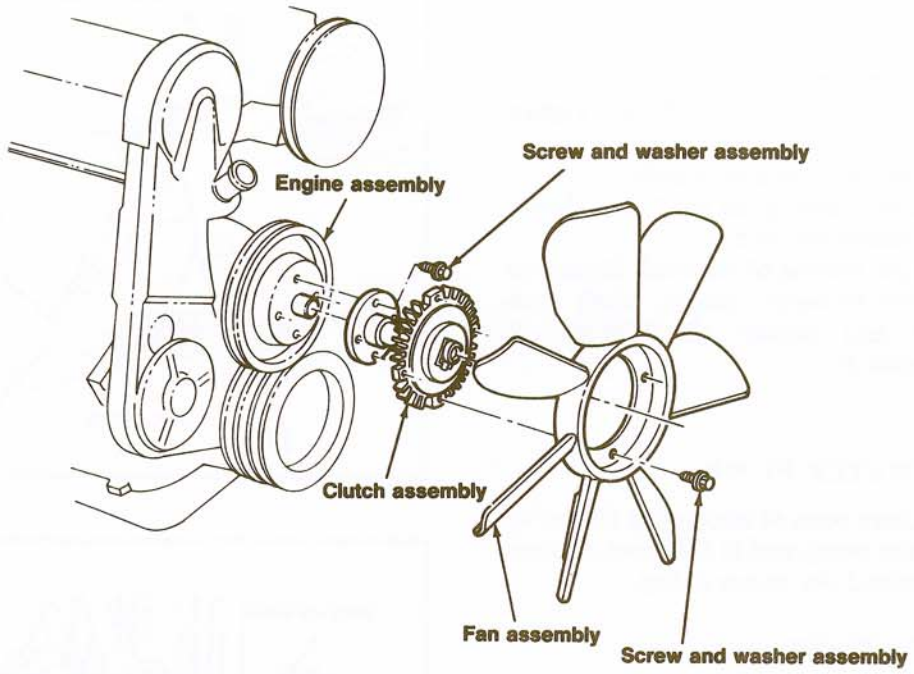

25

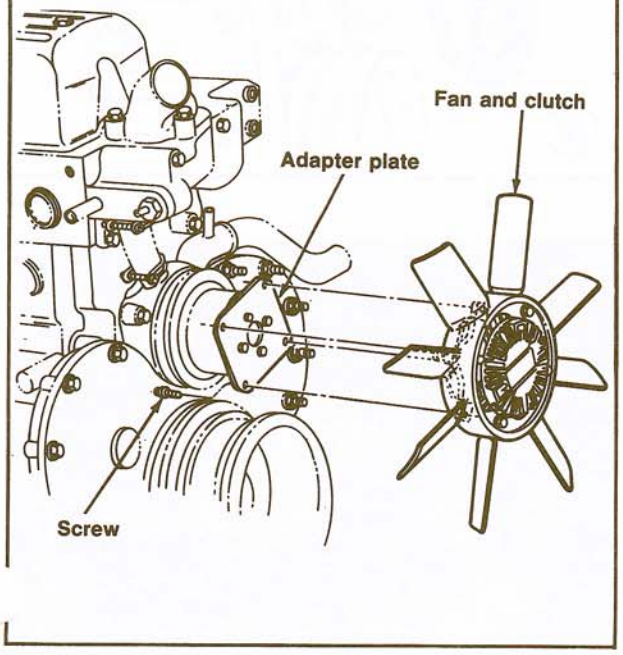

26

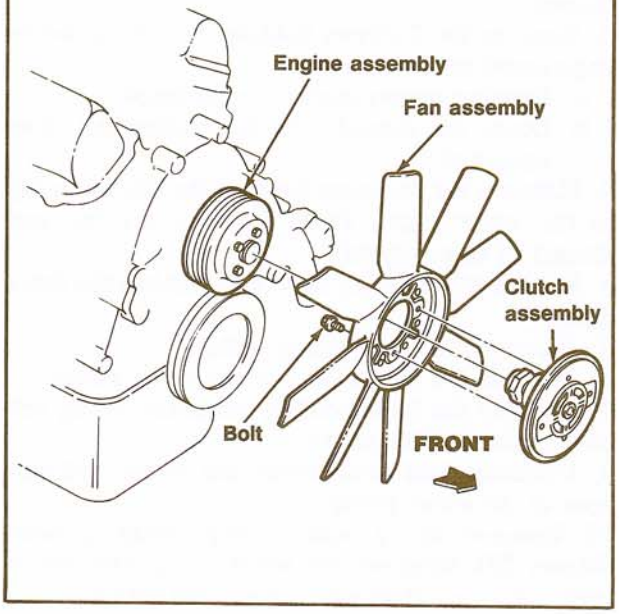

2A. 2.3L diesel—Use tool part No. T84P-6312-B and a strap wrench to loosen the nut holding the viscous clutch to the water pump shaft hub (**Figure 27**).
2B. V6—Remove the large nut holding the viscous clutch to the water pump shaft hub with tools part No. T83T-6312-A and T83T-6312-B. See **Figure 28**.
3. Remove the fan and clutch as a unit.
4. Remove the bolts holding the fan to the clutch, if necessary to separate the unit.
5. Installation is the reverse of removal. Be sure to rotate the clutch-to-water pump shaft nut counterclockwise and tighten all fasteners to specifications (**Table 1**).

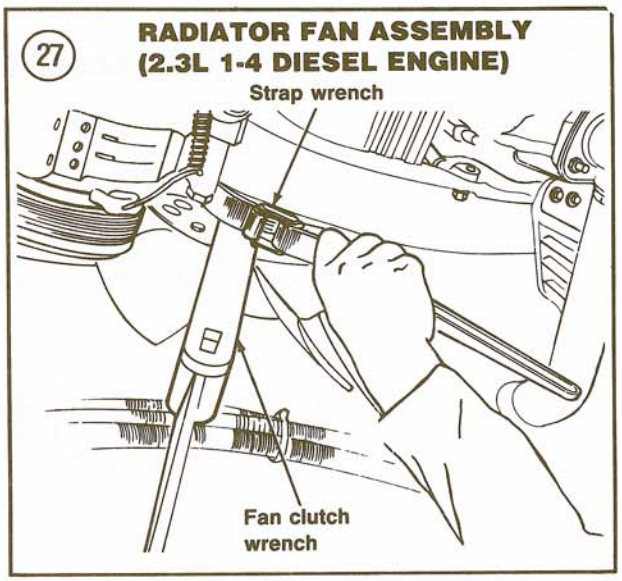

WATER PUMP

A water pump may warn of impending failure by making noise. If the pump seal is defective, coolant may leak from behind the pump pulley.

4-cylinder Gasoline Engine

The water pump can be replaced without discharging the air conditioning system. A provision for wrench clearance has been made in the timing belt inner cover. Only the outer cover must be removed to replace the water pump. The pump is serviced as an assembly.
1. Disconnect the negative battery cable.
2. Drain the cooling system as described in this chapter.
3. Remove the 2 screws holding the fan shroud or fingerguard to the radiator:
   a. Remove fingerguard, if so equipped.
   b. Drape the shroud over the cooling fan, if so equipped.
4. Remove the fasteners holding the fan assembly to the water pump shaft. Remove the fan and shroud (if so equipped).
5. Loosen all accessory units and remove the drive belt(s).
6. Remove the water pump pulley.
7. Remove the heater hose at the water pump.
8. Remove the bolts holding the outer timing belt cover. Remove the cover.
9. Unclamp and disconnect the lower radiator hose at the water pump.
10. Remove the 3 water pump retaining bolts (**Figure 29**). Remove the water pump and gasket from the cylinder block. Discard the gasket.

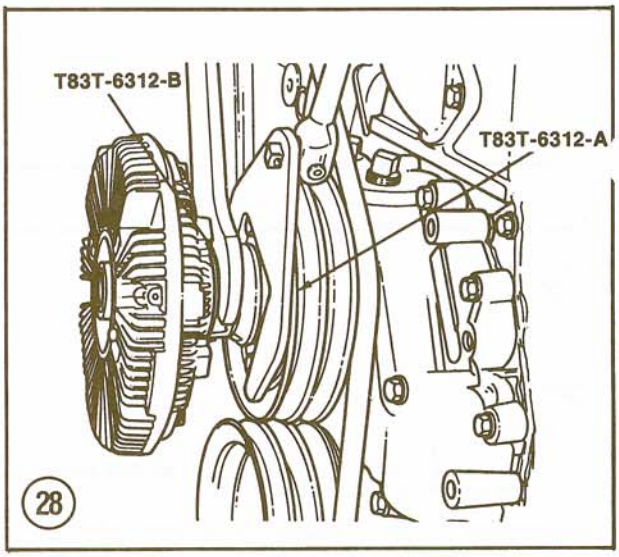

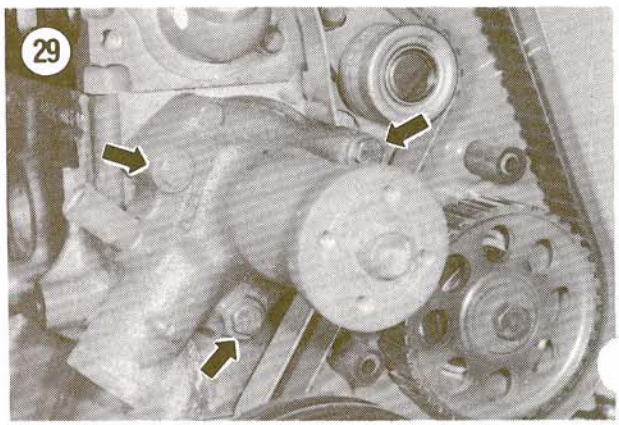

11. Remove all gasket residue from the block mounting surface (and water pump, if it is to be reinstalled).
12. Installation is the reverse of removal. Attach a new gasket to the water pump with contact cement. Apply a water-resistant sealer to the pump bolt threads and tighten bolts to 14-21 ft.-lb. (19-28 N•m). Adjust drive belts (Chapter Three).

2.2L Diesel

1. Disconnect both negative battery cables.
2. Drain the cooling system as described in this chapter.
3. Remove the fan and fan shroud as described in this chapter.
4. Loosen all accessory units and remove the drive belts.
5. Unclamp and disconnect the heater hose, by-pass hose and coolant inlet hose at the water pump.
6. Remove the fasteners holding the water pump to the front cover. Remove the water pump and gasket. Discard the gasket.
7. Remove all gasket residue from the front cover mounting surface (and water pump, if it is to be reinstalled).
8. Installation is the reverse of removal. Use a new gasket and tighten attaching bolts to 12-17 ft.-lb. (16-24 N•m). Adjust drive belts (Chapter Three).

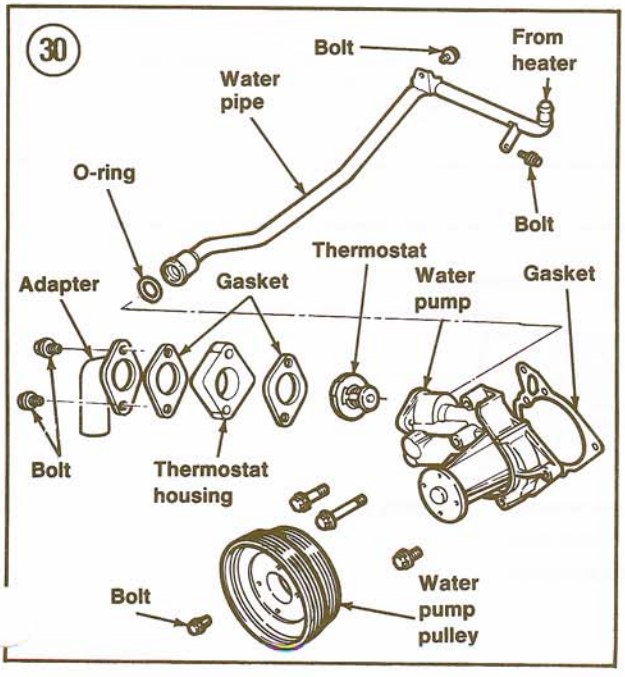

2.3L Turbo diesel

Refer to **Figure 30** for this procedure.
1. Disconnect both negative battery cables.
2. Remove the fan and fan shroud as described in this chapter.
3. Loosen the air conditioning compressor drive belt tensioner. Remove belt, then remove tensioner.
4. Remove the water pump pulley fasteners. Remove the pulley.
5. Remove the air conditioning support bracket.
6. Drain the cooling system as described in this chapter.
7. Remove the thermostat housing and thermostat as described in this chapter.
8. Remove the upper and lower timing belt covers.
9. Remove the fasteners holding the water pump to the block. Remove the water pump and gasket. Discard the gasket.
10. Remove all gasket residue from the block mounting surface (and water pump, if it is to be reinstalled).
11. Installation is the reverse of removal. Use a new gasket and tighten attaching bolts to 12-17 ft.-lb. (16-24 N•m). Tighten pulley bolts to 11-16 ft.-lb. (15-21 N•m). Adjust drive belts (Chapter Three).

V6 Engine

1. Disconnect the negative battery cable.
2. Drain the cooling system as described in this chapter.
3. Unclamp and disconnect the lower radiator and heater return hoses at the water pump housing.
4. Remove the fan and clutch assembly as described in this chapter.
5. Loosen the alternator mounting bolts. Swing the alternator toward the engine and remove the belt. If equipped with air conditioning, remove the alternator and mounting bracket.
6. Remove the water pump pulley fasteners. Remove the pulley.
7. Remove the water pump (and thermostat housing assembly on low-mount engines) from the front cover. Remove and discard the gasket.
8. Remove all gasket residue from the front cover mating surfaces (and water pump, if it is to be reinstalled).
9. Coat both sides of a new gasket with water-resistant sealer and install gasket on water pump housing.

10. Installation is the reverse of removal. Tighten water pump fasteners to 7-9 ft.-lb. (9-12 N•m). Tighten pulley fasteners to 14-22 ft.-lb. (20-30 N•m). Adjust drive belts (Chapter Three).

DRIVE BELTS

The water pump/fan drive belt, as well as the belts which drive the alternator and other accessory units, should be inspected at regular intervals (Chapter Three) to make sure they are in good condition and are properly tensioned.

Two types of drive belt are used on the vehicles covered in this manual: a smooth V-belt or a ribbed V-belt. See **Figure 31**.

Worn, frayed, cracked or glazed belts should be replaced immediately. The components to which they direct power are essential to the safe and reliable operation of the vehicle. If correct adjustment is maintained on all belts, they will usually all give the same service life. For this reason and because of the cost involved in replacing an inner belt (requiring the removal of all outer belts), it is a good idea to replace all belts as a set. The added expense is small compared to the cost of replacing the belts individually and eliminates the possibility of a breakdown on the road which could cost far more in time and money.

When a smooth V-belt is used, it should be correctly tensioned at all times. If loose, the belt will not permit the driven components to operate at maximum efficiency. The belt will also wear rapidly because of the increased friction caused by slipping. Belts that are too tight will be overstressed and prone to premature failure. An excessively tight belt will also overstress the accessory unit's bearings, resulting in their premature failure. When a ribbed V-belt is used, an idler or tensioner assembly eliminates the need for belt tension adjustment.

HEATER

The heater system consists of a blower air inlet and a heater/defroster asssembly. Vent, heat and defrost functions are controlled by the heater/defroster assembly. The blower and blower air inlet is connected to the front of the cowl in the engine compartment. The heater/defroster is fastened to the rear of the firewall in the cab. Mounting gaskets on both components prevent air, water and noise from entering the cab. **Figure 32** shows the heater system air flow.

This section covers the heater on non-air conditioned models only. Repair of the integral heater on air conditioned models requires special skills and tools and should be left to a Ford dealer or competent repair shop.

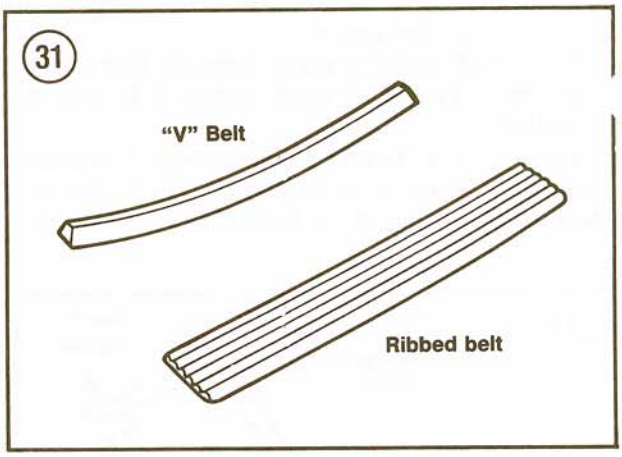

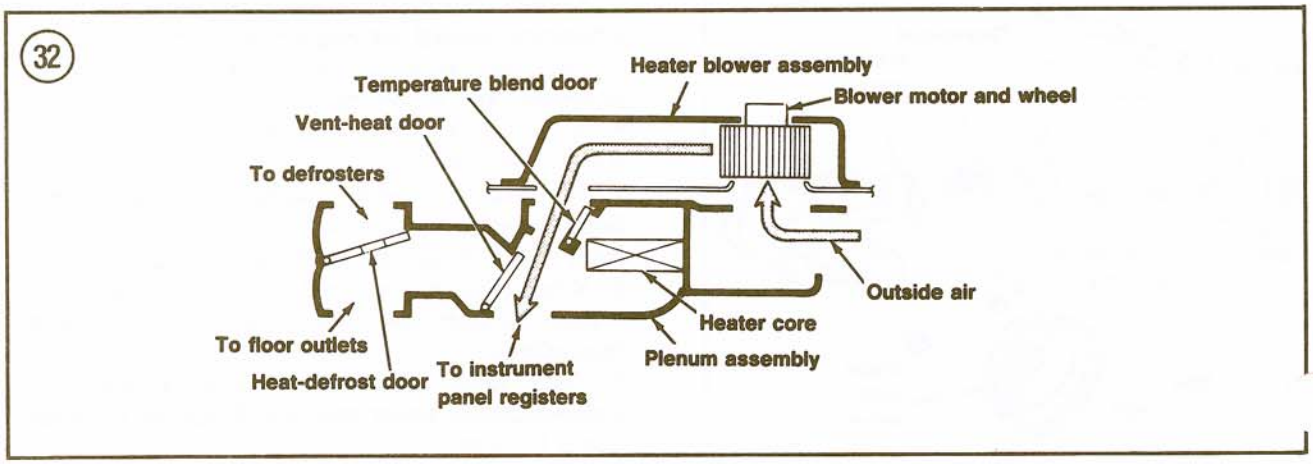

Troubleshooting

1. If the heater does not produce heat, make sure the engine will warm up in a reasonable amount of time. If the thermostat sticks in the open position or is misaligned in the thermostat housing, the engine will not completely warm up. Since hot engine coolant provides heat for the heater, a defective or misaligned thermostat may be the problem.
2. If the heater blower does not work, check the 30-amp fuse in cavity F9 of the fuse panel.
3. If the fuse is good, test the blower switch and blower motor as described in the following procedures.

Blower Motor Switch Test

Power to the blower motor is provided through the ignition switch, a 30-amp fuse in the fuse panel and the blower motor switch. Blower motor speed is controlled in all modes by the 5-position switch on the control assembly. If the blower motor does not run, test the switch as follows:
1. Remove the control assembly as described in this chapter.

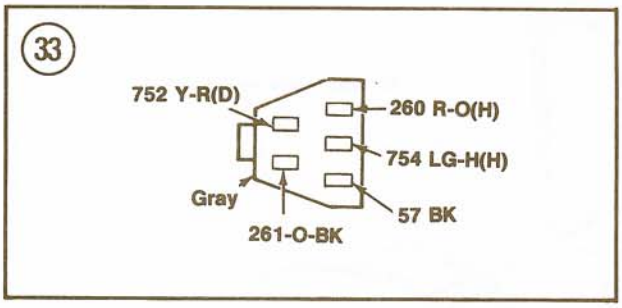

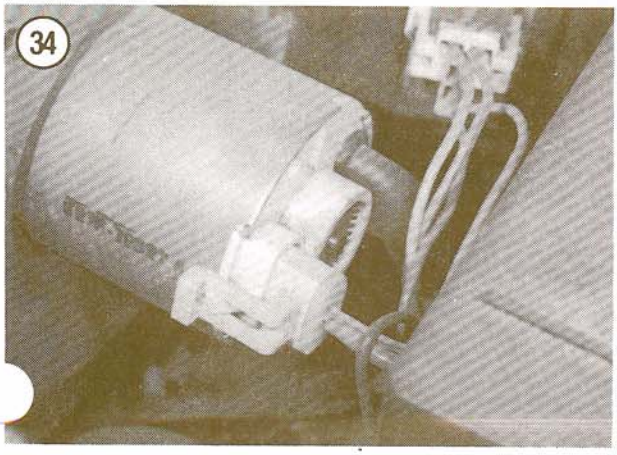

2. Refer to **Figure 33** and connect a self-powered test lamp or ohmmeter to the switch terminals as indicated in the following steps. Move the switch through all 5 positions.
3. To test low speed, check 260 R-O (H) and 57 BK. A good switch will indicate continuity only in low and medium-low positions.
4. To test medium-low speed, check 754 LG-H (H) and 57 BK. A good switch will indicate continuity only in medium-low and medium-high positions.
5. To test medium-high speed, check 752 Y-R (D) and 57 BK. A good switch will indicate continuity only in medium-high and high positions.
6. To test high speed, check 261 O-BK and 57 BK. A good switch will indicate continuity only in high position.
7. If the switch fails to perform as described in Steps 3-6, replace it as described in this chapter.

Blower Motor Voltage Test

NOTE

Make sure the battery is fully charged before performing this test. Battery voltage with the engine running should be approximately 14.2 volts.

1. Move the temperature selector lever on the control assembly to a position midway between COOL and WARM.
2. Move the function lever on the control panel to the PANEL position.
3. Insert voltmeter probes into the connector at the rear of the blower motor (**Figure 34**) to contact the wire terminals.
4. Start the engine and measure the voltage drop across the motor at each blower lever position. If not within the range specified in **Table 2**, replace the motor.

Blower Switch Replacement

Refer to **Figure 35** for this procedure.
1. Disconnect the negative battery cable.
2. Remove the control assembly as described in this chapter. It is not necessary to disconnect the assembly cables.
3. Pry the switch knob off with a small screwdriver.
4. Lift the snap-lock retainer on the switch electrical connector with a small screwdriver. Disconnect the connector from the switch.

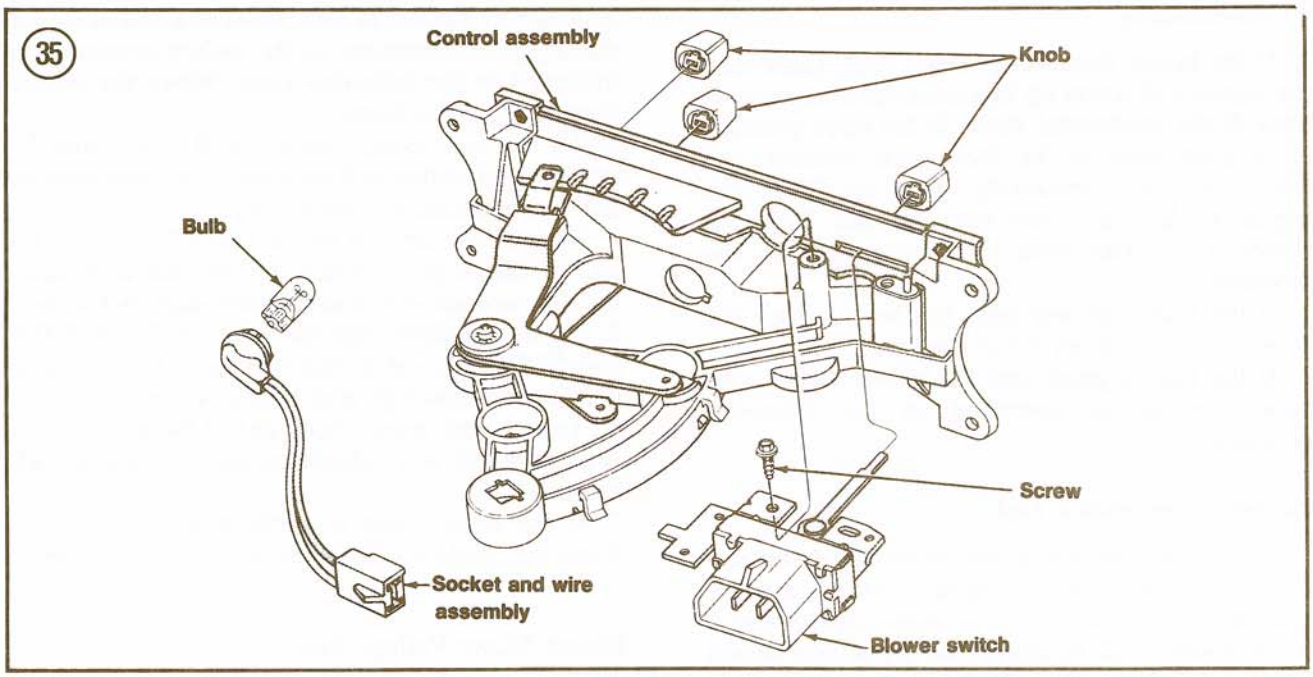
35
Control assembly
Knob
Bulb
Screw
Socket and wire assembly
Blower switch

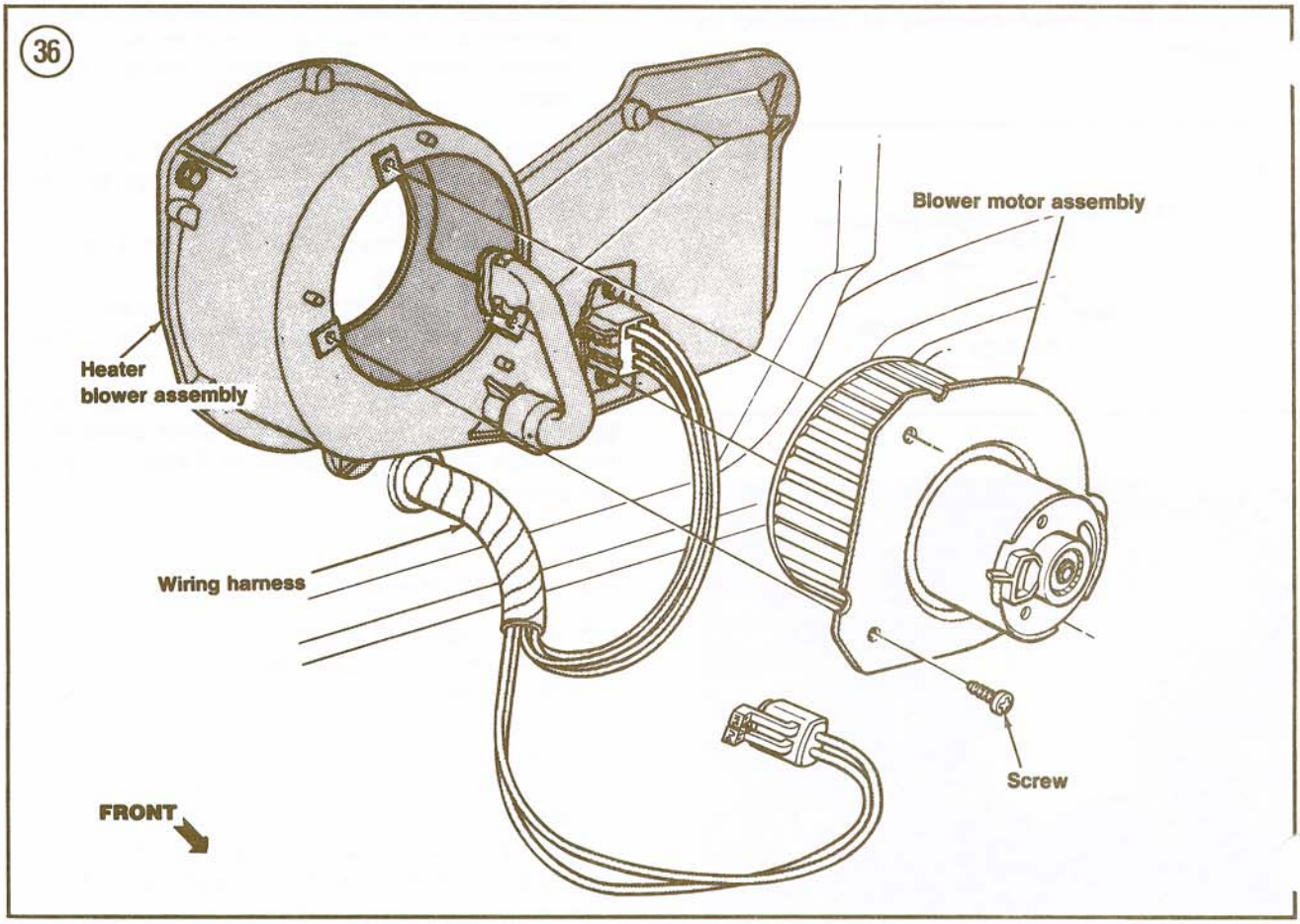
36
Blower motor assembly
Heater blower assembly
Wiring harness
Screw
FRONT

5. Remove the 2 hex head switch attaching screws. Remove the switch.
6. Installation is the reverse of removal. Test the new switch for proper blower motor operation.

Blower Motor
Removal/Installation

Refer to **Figure 36** for this procedure.
1. Disconnect the negative battery cable(s).
2. On California vehicles, remove the emission module located in front of the blower motor. **Figure 37** shows the module with its plastic cover removed. Disconnect the wire harnesses inside, remove the attaching screws and move the module out of the way.
3. Depress the wire harness connector tabs and disconnect the electrical connector from the blower motor.
4. Disconnect the cooling tube at the blower motor.

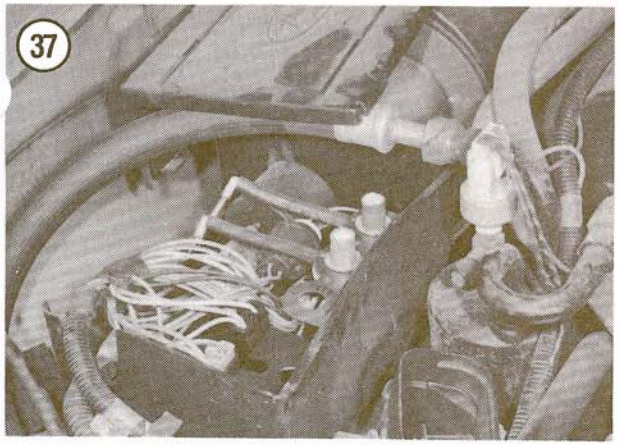

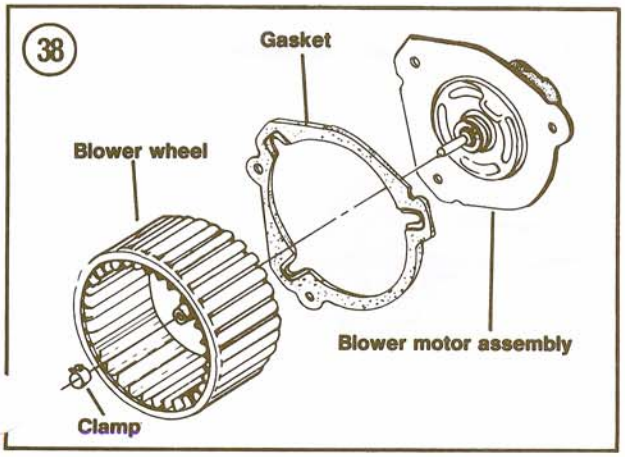

5. Remove the 3 screws holding the blower motor assembly to the blower motor case.
6. Hold the cooling tube out of the way and pull the blower motor from the case.
7. If a new motor is to be installed, remove the blower wheel hub clamp from the motor shaft (**Figure 38**). Pull the wheel from the motor shaft.
8. Installation is the reverse of removal.

Heater Core
Removal/Installation

Refer to **Figure 39** for this procedure.
1. Make sure the engine is cool. Remove the radiator cap to relieve system pressure.
2. Disconnect the heater hoses from the heater core tubes. See **Figure 5** (typical). Plug the hoses to prevent leakage.
3. Working in the cab, remove the 5 screws holding the heater core access cover to the plenum assembly. Remove the access cover.
4. Pull the heater core to the rear and down, removing it from the plenum assembly.
5. Installation is the reverse of removal.

Control Assembly
Removal/Installation

Refer to **Figure 40** for this procedure.
1. Disconnect the negative battery cable(s).
2. Pull the control knobs from the radio, if so equipped.
3. Remove the cigarette lighter.
4. Remove 4 screws holding the top of the cluster finish panel to the upper finish panel pad.
5. Remove the cigarette lighter trim panel. Remove the center and left instrument panel trim panels.
6. Pull the headlight switch to the ON position. Remove the cluster finish panel lower attaching screws. Lift the panel away from the instrument panel.
7. Remove the 4 control assembly attaching screws.
8. Withdraw the control assembly from the instrument panel far enough to unplug the blower switch and control light harnesses.

NOTE
The 2 control cables are secured to the control assembly bracket by snap-in flag connectors. The flag connectors must be squeezed together with needlenose pliers for removal.

7

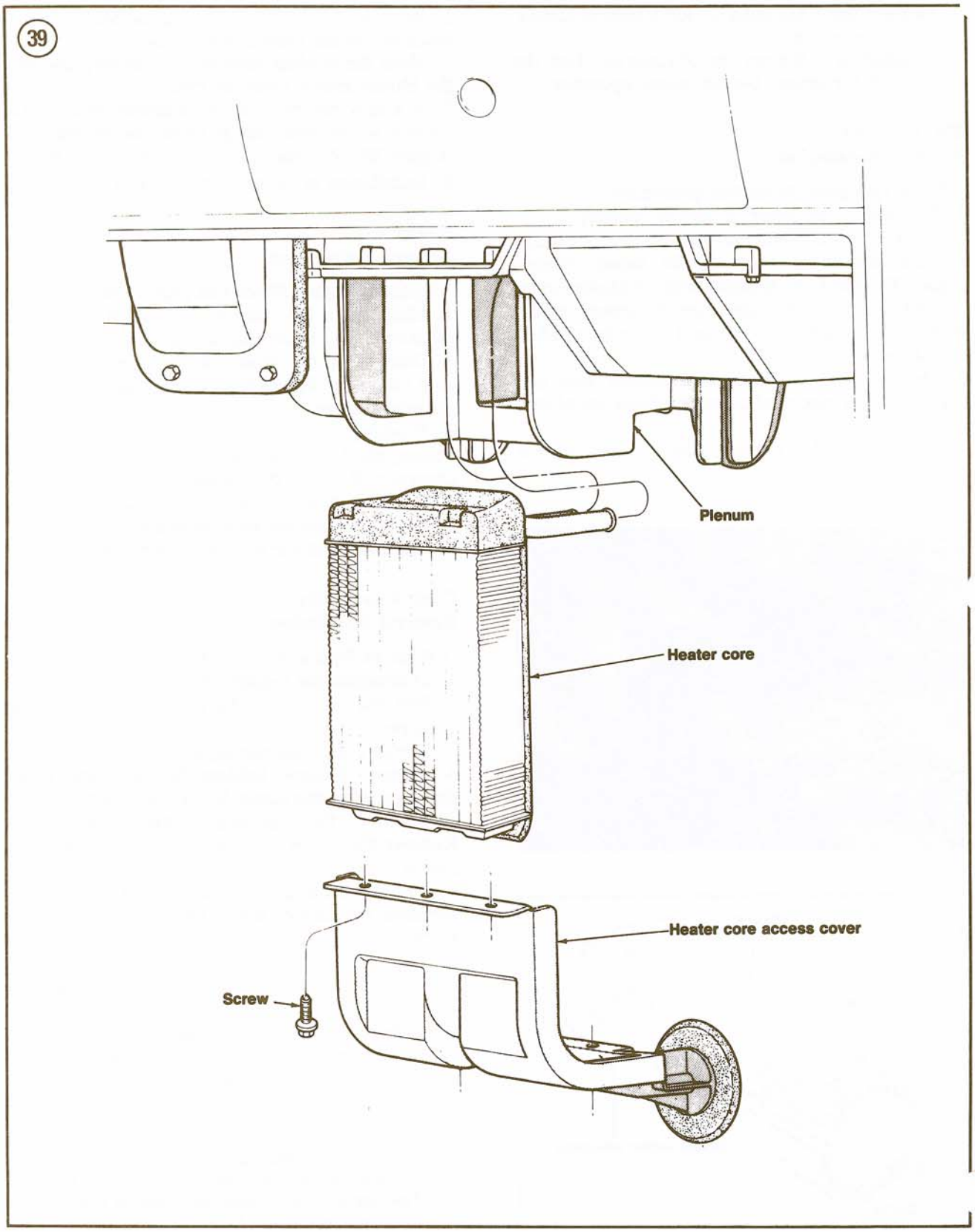
39
Plenum
Heater core
Heater core access cover
Screw

40

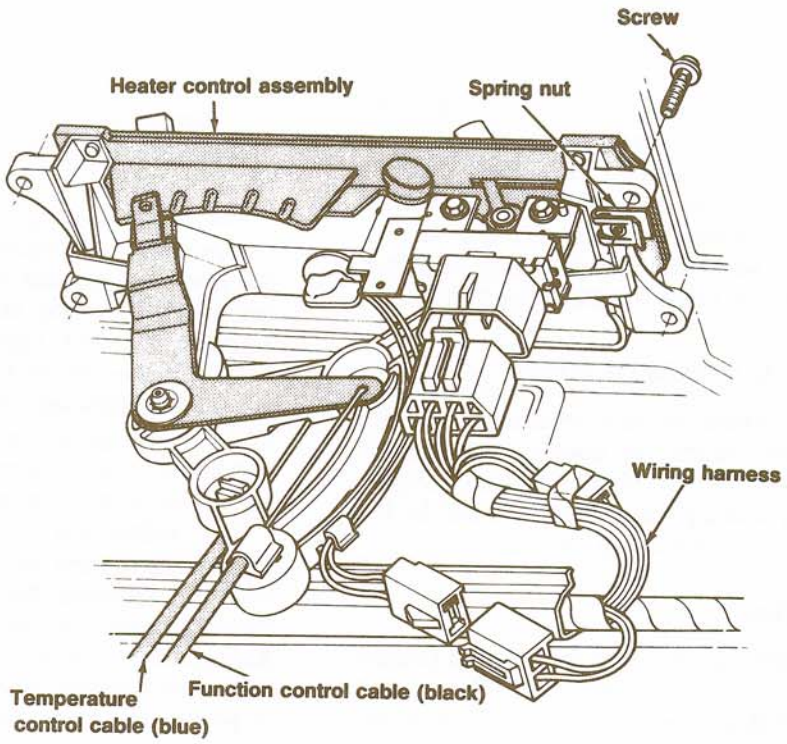

41

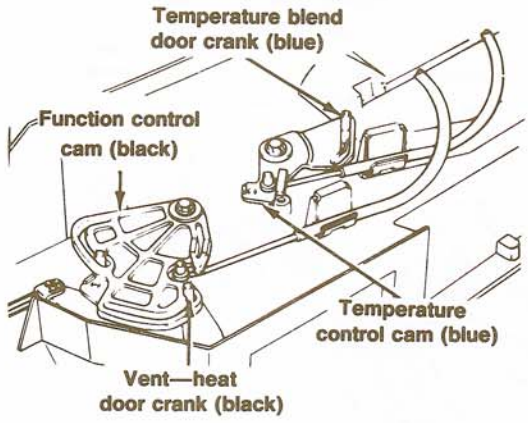

9. Remove the black function control cable from the control bracket. Remove the blue temperature control cable from the control bracket.
10. Remove the control assembly.
11. Installation is the reverse of removal. Cable attachment points on the control bracket are marked "BL" and "BK" to assist in reconnecting the cables properly.

Control Cable Adjustment

Refer to **Figure 41** for this procedure.

1. Open the glovebox door. Squeeze the sides of the glovebox together to disengage the tabs and let the glove box hang free. All cable adjustment work will be done through the glovebox opening.
2. Move the function control lever to the DEFROST position. Move the temperature control lever to the COOL position.
3. Reach through the glovebox opening and depress the metal clip tab on top of the plenum, then pull the attached cable free. Repeat this step with the other cable. The loop on each cable should remain attached to its control cam.

4. Push the temperature control cable toward its control cam until the blend door seats, then push the cable into the metal clip until it snaps into place.
5. Pull the function control cable away from the cam until the doors seat, then push the cable into the metal clip until it snaps in place.
6. Turn the blower switch to the HIGH position and work the temperature and function levers to check cable adjustment. Readjust as required.
7. Squeeze the sides of the glovebox together, engage the tabs and close the glovebox door.

AIR CONDITIONING

This section covers the maintenance and minor repairs that can prevent or correct common air conditioning problems. Major repairs require special training and equipment and should be left to a dealer or air conditioning expert.

System Operation

A cycling clutch, fixed orifice tube design (**Figure 42**) is used on all vehicles. Spring-lock push-connect fittings similar to those used in the fuel system (see Chapter Six) require the use of a spring-lock coupling tool set (Ford special tool part No. D81L-19703-A) for removal.

System Operation

There are 5 basic components common to the air conditioning system used with all vehicles.

a. Compressor.
b. Condenser.
c. Accumulator/drier.
d. Fixed orifice tube.
e. Evaporator.

For practical purposes, the cycle begins at the compressor. See **Figure 42**. The refrigerant enters the low-pressure side of the compressor in a warm low-pressure vapor state. It is compressed to a high-pressure hot vapor and pumped out of the high-pressure side to the condenser.

Air flow through the condenser removes heat from the refrigerant and transfers the heat to the outside air. As the heat is removed, the refrigerant condenses to a warm high-pressure liquid.

The refrigerant then flows through a line containing a fixed orifice tube to the evaporator, where it removes heat from the cab air that is blown across the evaporator's fins and tubes. Refrigerant flow continues to the accumulator/drier, where moisture is removed and impurities are filtered out. The refrigerant is store in the accumulator/drier until it is needed. Fron the accumulator/drier, the refrigerant then returns to the compressor as a warm low-pressure vapor.

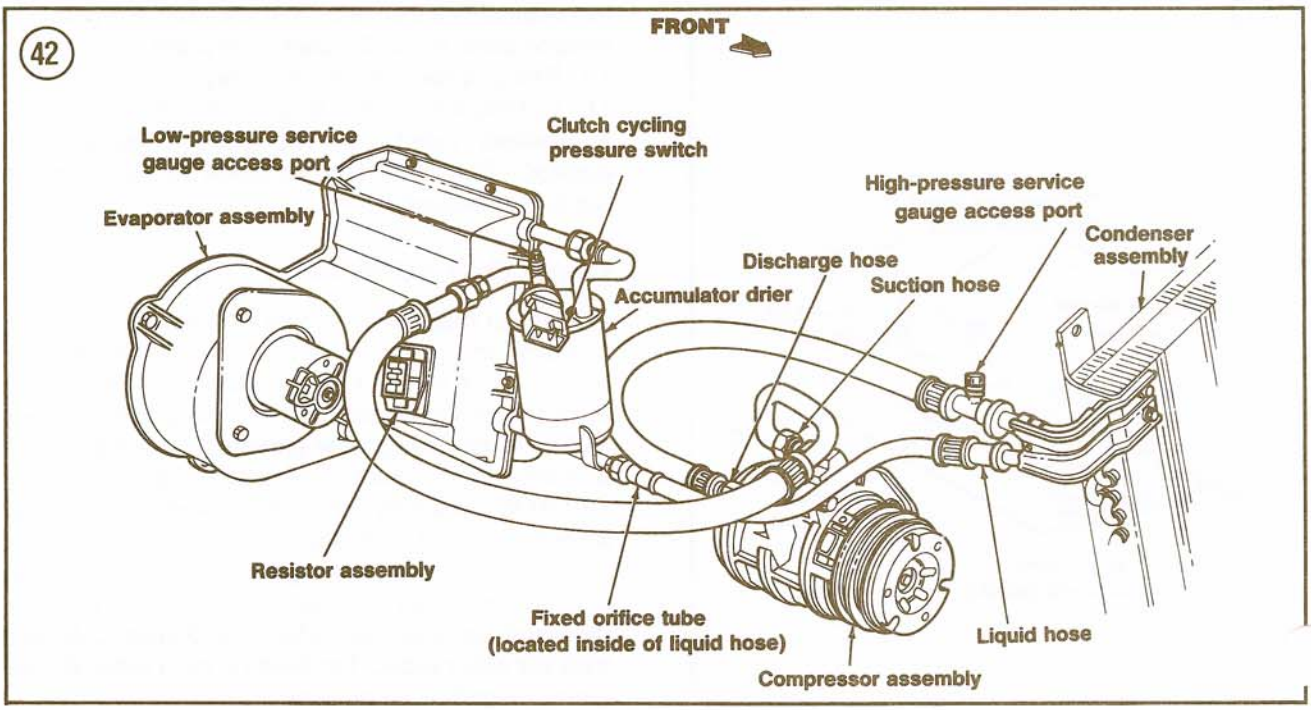

GET TO KNOW YOUR VEHICLE'S SYSTEM

Figure 42 shows the major components of the cycling clutch, fixed orifice tube system. Refer to it as required to locate each of the following components in turn.

a. Compressor.
b. Condenser.
c. Accumulator/drier.
d. Fixed orifice tube.
e. Evaporator.

Compressor

The compressor is located on the drive belt end of the engine, like the alternator, and is driven by a ribbed drive belt. The large pulley on the front of the compressor contains an electromagnetic clutch. This activates and operates the compressor when the air conditioning is switched on.

Condenser

The condenser is mounted in front of the radiator. Air passing through the condenser tubes and fins removes heat from the refrigerant in the same manner as it removes heat from the engine coolant as it passes through the radiator. The cooling fan also pulls air through the condenser.

Accumulator/drier

The accumulator/drier is a small tank-like unit connected to the evaporator outlet tube and housing the cycling clutch pressure switch. The switch controls evaporator core pressure to prevent evaporator icing and blocked air flow. This cycling operation will cause occasional slight changes in engine speed and power under certain operating conditions, but this should be considered normal.

Fixed Orifice Tube

This is a restriction located in the evaporator inlet tube. Filter screens on each end of the tube body strain the liquid refrigerant passing through the orifice. O-rings are used on the tube body to prevent the high-pressure liquid refrigerant from bypassing the orifice. The fixed orifice tube is non-serviceable and must be replaced as a unit if defective.

Evaporator

The evaporator is located in the cab as a part of the blower motor assembly. Warm air is blown across the fins and tubes, where it is cooled and dried, then ducted into the cab by the blower.

ROUTINE MAINTENANCE

Basic maintenance of the air conditioning system is easy. At least once a month, even in cold weather, start your engine, turn on the air conditioner and operate it at each of the control settings. Operate the air conditioner for about 10 minutes, with the engine running at about 1,500 rpm. This will ensure that the compressor seal does not deform from sitting in the same position for a long period of time. If deformation occurs, the seal is likely to leak.

The efficiency of the air conditioning system also depends in great part on the efficiency of the cooling system. If the cooling system is dirty or low on coolant, it may be impossible to operate the air conditioner without the engine overheating. Inspect the coolant. If necessary, flush and refill the cooling system as described in this chapter.

NOTE

Do not install a bug screen on vehicles with air conditioning. The screen reduces air flow and thus affects air conditioner efficiency. During hot weather, a bug screen can cause the engine to overheat.

Use an air hose and a soft brush to clean the radiator and condenser fins and tubes. Remove any bugs, leaves or other imbedded debris.

Check drive belt tension as described in this chapter.

If the condition of the cooling system thermostat is in doubt, test it as described in this chapter.

Once you are sure the cooling system is in good condition, the air conditioning system can be inspected.

Inspection

1. Clean all lines, fittings and system components with solvent and a clean rag. Pay particular attention to the fittings; oily dirt around connections almost certainly indicates a leak. Oil from the compressor will migrate through the system to the leak. Carefully tighten threaded

connections (spring-lock connections cannot be tightened), but do not overtighten and strip the threads. If the leak persists, it will soon be apparent as oily dirt will continue to accumulate.

NOTE

*Some fittings in the air conditioning system use spring lock couplings (**Figure 43**) in which the flared end of the female fitting slips behind a garter spring inside the male fitting cage. The spring and cage prevent the coupling from disengaging. Due to the design of this coupling, no attempt should be made to tighten it. If the fitting is leaking, have it replaced by a Ford dealer or air conditioning expert.*

2. Clean the condenser fins and tubes with a soft brush and an air hose or with a high-pressure stream of water from a garden hose. Remove any bugs, leaves or other imbedded debris. Carefully straighten any bent fins with a screwdriver, taking care not to puncture or dent the tubes.
3. Start the engine and check the operation of the blower motor and the compressor clutch by turning the controls ON and OFF. If either the blower or clutch fails to operate, shut off the engine and check the air conditioner fuse. See *Electrical circuit protection*, Chapter Eight. If the fuse is blown, replace it. If not, remove and clean the fuse holder contacts. Then check the clutch and blower operation again. If they still will not operate, take the vehicle to a dealer or air conditioning specialist.

REFRIGERANT

The air conditioning system uses a refrigerant called dichlorodifluoromethane, or R-12.

WARNING

Refrigerant creates freezing temperatures when it evaporates. This can cause frostbite if it touches skin, and blindness if it touches the eyes. If discharged near an open flame, R-12 creates poisonous gas. If the refrigerant can is hooked up to the pressure side of the compressor, it may explode. Always wear safety goggles and gloves when working with R-12.

Charging

This section applies to partially discharged or empty air conditioning systems. If a hose has been disconnected or any internal part of the system exposed to air, the system should be evacuated and recharged by a dealer or air conditioning shop.

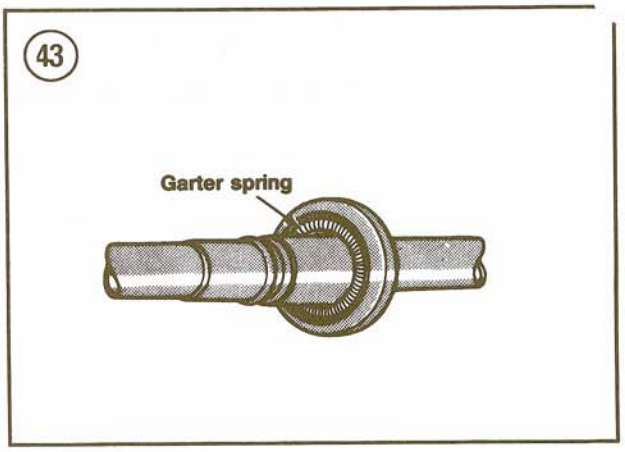

Recharge kits are available from auto parts stores. Refer to **Figure 44** for this procedure.

WARNING

Wear gloves and safety goggles to prevent frostbite and blindness. Do not allow any open flame near the refrigerant or poisonous gas may be formed.

The following procedure is for use with manifo gauge set Ford part No. YT-201 and requires the use of a special Motorcraft adapter part No. YT-354 or YT-355 to connect the gauge set to the high-pressure service access gauge port valve. If a different gauge set is used, follow the instructions provided by the manufacturer.

1. Close both gauge valves.
2. Remove the high- and low-pressure service access gauge port valve caps.
3. Connect the high- and low-pressure gauge hoses to the respective high- and low-pressure port valves. Use adapter part No. YT-354 or YT-355 at the high-pressure valve.
4. Connect the center gauge set hose to the refrigerant can and hang the gauge set from the hood. **Figure 44** shows a typical installation.
5. Loosen the center gauge set hose at the gauge set. Open the refrigerant can valve and allow a small amount of refrigerant to escape. This will purge any air or moisture from the center hose. Tighten the hose at the gauge set after purging is complete.
6. Disconnect the clutch cycling pressure switch connector at the accumulator/drier. Connect a jumper lead across the switch connector termina
7. Open the manifold gauge set low side valve a let refrigerant pass into the system.

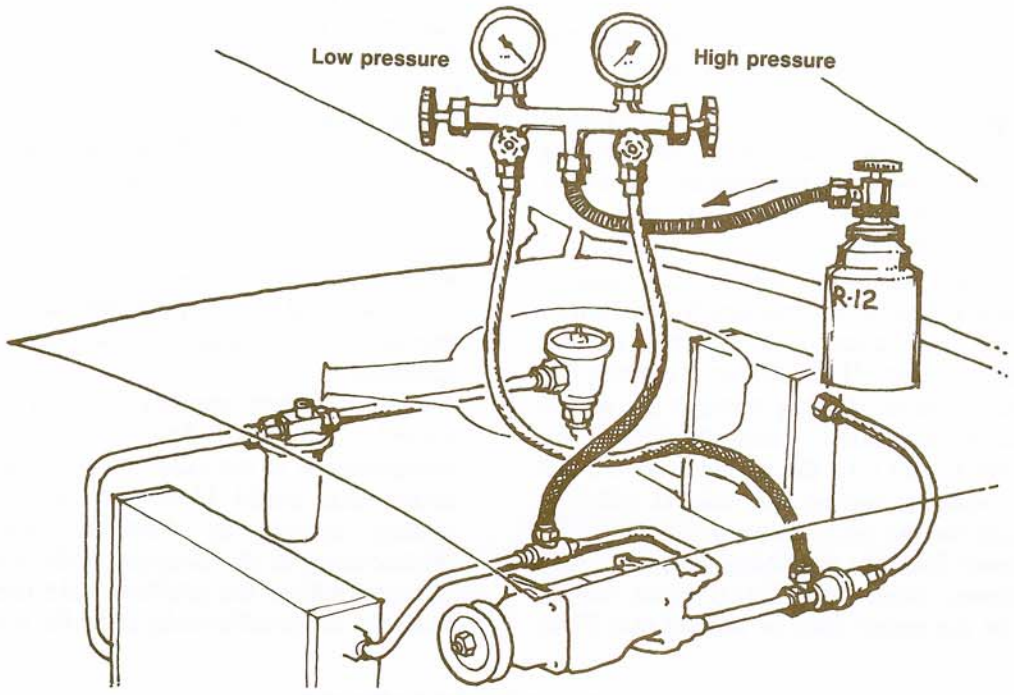

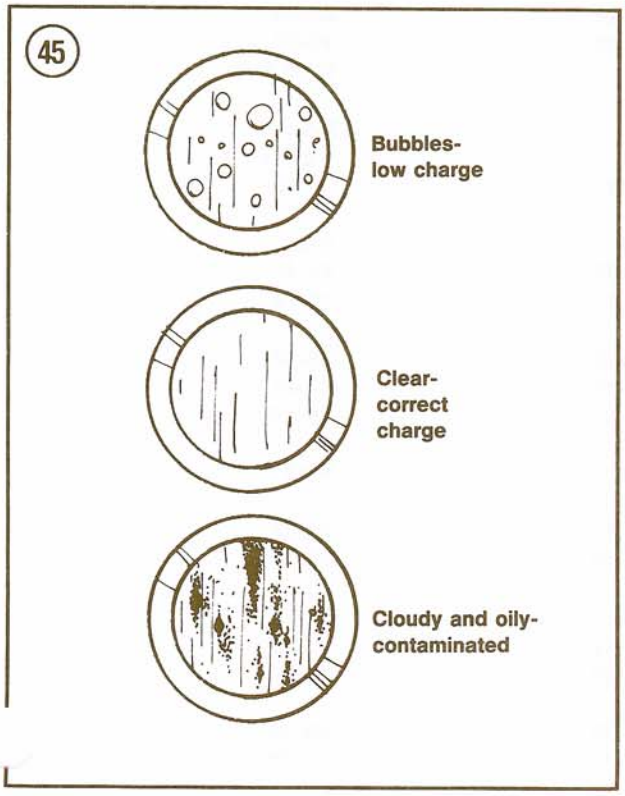

8. When no more refrigerant will pass into the system, start the engine. Move the air door lever to the VENT/HEAT/AC position, the blower switch to HIGH and depress the air conditioning ON/OFF pushbutton. This will draw more refrigerant into the system.
9. Continue adding refrigerant until the flow seen through the accumulator/drier is free of bubbles. See **Figure 45**.

WARNING

Never remove a gauge line from its adapter with the line connected to the air conditioning system. Disconnect the line at the service fitting. Removing the charging hose at the gauge set while still connected to the accumulator can cause serious personal injury.

10. Shut off the refrigerant feed valve and close the manifold gauge set low-pressure valve. Remove the gauge set and install the protective caps on the valve fittings.
11. Remove the jumper lead from the clutch cycling pressure switch connector. Reconnect the connector to the switch.
12. Check the system for leaks. Shut the engine off.

TROUBLESHOOTING

If the air conditioner fails to blow cold air, the following steps will help locate the problem.

1. First, stop the vehicle and look at the control settings. One of the most common air conditioning problems occurs when the temperature is set for maximum cold and the blower is set on LOW. This promotes ice buildup on the evaporator fins and tubes, particularly in humid weather. Eventually, the evaporator will ice over completely and restrict air flow. Turn the blower on HIGH and place a hand over an air outlet. If the blower is running but there is little or no air flowing through the outlet, the evaporator is probably iced up. Leave the blower on HIGH and turn the temperature control off or to its warmest setting and wait. It will take 10-15 minutes for the ice to start melting.
2. If the blower does not run at any speed, the fuse may be blown, there may be a loose wiring connection or the motor may be burned out. First, check the fuse panel for a blown or incorrectly seated fuse, then check the wiring for loose connections.
3. Shut off the engine and inspect the compressor drive belt. If worn or loose, replace or tighten as required. See *Drive Belts* in Chapter Three.
4. Start the engine. Check the compressor clutch by turning the air conditioner ON and OFF. If the clutch does not activate, its fuse may be blown or the evaporator temperature-limiting switches may be defective. If the fuse is defective, replace it. If the fuse is not the problem, have the system checked by a dealer or an air conditioning specialist.
5. If the system appears to be operating as it should, but air flow into the passenger compartment is not cold, check the condenser for debris that could block air flow. Recheck the cooling system as described under *Routine Maintenance* in this chapter. If the preceding steps have not solved the problem, take the vehicle to a dealer or air conditioning shop for service.

Table 1 TIGHTENING TORQUES

Fastener	in.-lb.	ft.-lb.	N•m
Fan hub fasteners			
V6 & 2.3L turbo diesel		15-25	20-33
All others		14-20	19-27
Fan-to-clutch screws	55-70		6.2-7.9
Hose clamps			
Double wire type	20-30		2.2-3.4
Radial screw type	16-24		1.8-2.7
Oil cooler retaining nuts		9-11	12-15
Radiator			
Fingerguard or shroud		4-6	6-8
Support-to-insulator bolt		30-35	41-47
Top bracket-to-support		8-11	11-14
Thermostat housing			
2.3L turbo diesel		16-20	22-27
V6		12-15	17-21
All others		14-21	19-29
Timing belt cover			
Gasoline		6-9	8-12
Transmission oil line			
Radiator fitting		18-23	24-31
Nut-to-fitting		12-18	17-24
Water pump bolts			
V6		7-9	9-12
Diesel		12-17	16-24
4-cylinder gasoline		14-21	19-29
Water pump pulley bolts			
V6		14-22	20-30
2.3L turbo diesel		11-16	15-21

Table 2 BLOWER MOTOR VOLTAGE DROP

Blower speed	With air conditioning	Without air conditioning
Off		
Low	5.1	5.6
Medium-low	7.6	7.8
Medium-high	10.4	10.1
High	13.4	11.8

CHAPTER EIGHT

ELECTRICAL SYSTEM

The vehicles covered in this manual are equipped with a 12-volt, negative-ground electrical system.

Many electrical problems can be traced to a simple cause such as a blown fuse, a loose or corroded connection, a loose alternator drive belt or a frayed wire. While these are easily corrected problems which may not appear important, they can quickly lead to serious difficulty if allowed to go uncorrected.

Complete overhaul of electrical components such as the alternator, distributor or starter motor is neither practical nor economical. In many cases, the necessary bushings, bearings or other worn parts are not available for individual replacement.

If tests indicate a unit with problems other than those discussed in this chapter, replace it with a new or rebuilt unit. Make certain, however, that the new or rebuilt part to be installed is an exact replacement for the defective one removed. Also make sure to isolate and correct the cause of the failure before installing a replacement. For example, an uncorrected short in an alternator circuit will most likely burn out a new alternator as quickly as it damaged the old one. If in doubt, always consult an expert.

This chapter provides service procedures for the battery, charging system, starter, ignition system, lights, switches, turn indicators, horn, windshield wipers and washers, fuses and fusible links.

Table 1 and **Table 2** are at the end of the chapter.

BATTERY

The battery is the single most important component in the automotive electrical system. It is also the one most frequently neglected. In addition to checking and correcting the battery electrolyte level in unsealed batteries on a weekly basis (Chapter Three), the battery should be cleaned and inspected at periodic intervals.

All gasoline models are factory-equipped with a lightweight, low-maintenance battery of vent cap design which requires electrolyte level inspections only at the start of each winter season or every 15,000 miles. A sealed maintenance-free battery is optional and may be used for replacement.

Diesel models use two 12-volt batteries connected in parallel to provide sufficient capacity for the glow plugs, fuel line heater and starter motor. **Figure 1** shows the typical diesel battery connection points. Both batteries must be disconnected when servicing the vehicle.

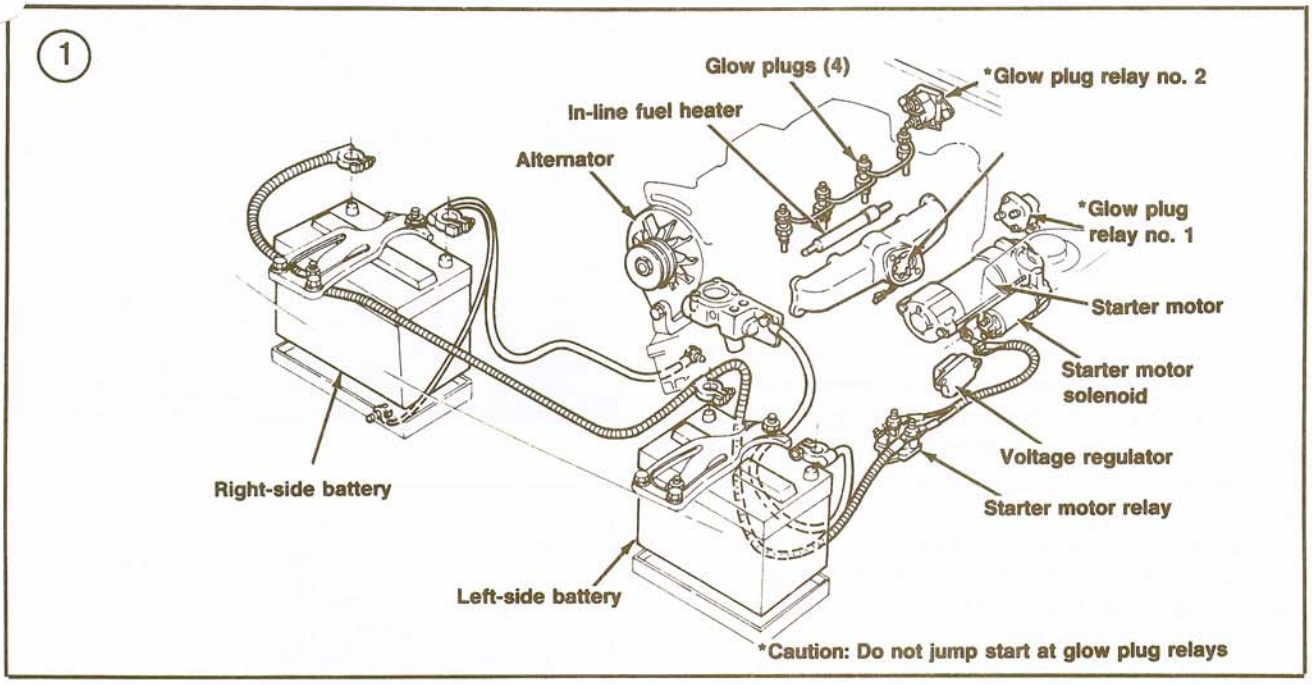

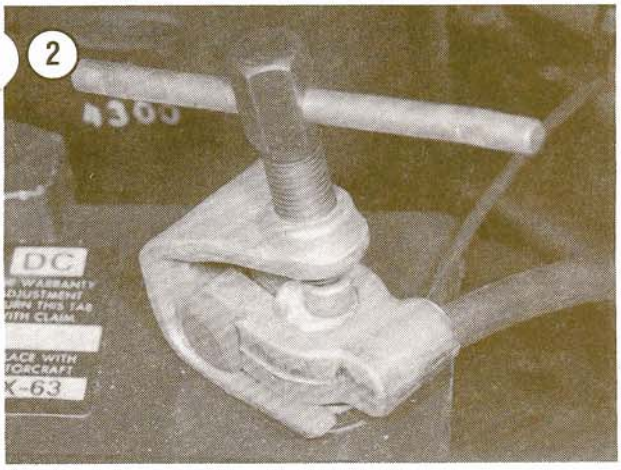

When a standard vent cap battery is used as a replacement, it should be checked periodically for electrolyte level, state of charge and corrosion. During hot weather periods, frequent checks are recommended. If the electrolyte level is below the bottom of the vent well in one or more cells, add distilled water as required. To assure proper mixing of the water and acid, operate the engine immediately after adding water. *Never* add battery acid instead of water—this will shorten the battery's life.

Maintenance-free batteries are completely sealed and never require the addition of water.

Battery Cables

The battery cables used with the diesel engine are much larger (0 gauge) than cables used with gasoline engines (6 gauge). Larger cables are required because of the large amount of current provided by the battery and the distance between the battery and starter. *Do not* replace a diesel battery cable with one smaller than 0 gauge or a gasoline engine battery cable with one smaller than 6 gauge.

Care and Inspection

1. Loosen the bolts in the terminal clamps enough so the clamps can be spread apart. Lift each clamp (negative first) straight up to remove it from the battery post. Disconnect both negative and positive battery cables (**Figure 1**) on diesel models.

CAUTION

If the cable clamp will not come off the battery post easily when the clamp bolt is loosened, use a battery terminal puller as shown in ***Figure 2****. Hitting the clamp or trying to pry it off the post can cause internal damage to the battery.*

2. Unscrew the hold-down clamp nuts (**Figure 3**) and remove the hold-down frame.
3. Attach a battery carrier or carrier strap and lift the battery from the engine compartment.

4. Check the entire battery case for cracks or other damage.
5. If the battery has removable vent caps, cover the vent holes in each cap with small pieces of masking tape.

CAUTION

Keep cleaning solution out of the battery cells in Step 6 or the electrolyte will be seriously weakened.

6. Scrub the top of the battery with a stiff bristle brush, using a baking soda and water solution (**Figure 4**). Rinse the battery case with clear water and wipe dry with a clean cloth or paper towels. Remove the masking tape from the filler cap vent holes, if so equipped.
7. Inspect the battery tray(s) in the engine compartment for corrosion. Clean if necessary with the baking soda and water solution. Rinse with clear water and wipe dry.
8. Clean the battery cable clamps with a stiff wire brush or one of the many tools made for this purpose (**Figure 5**). The same tool is used for cleaning the battery posts (**Figure 6**).
9. Reposition the battery on the battery tray and remove the carrier or strap. Install the hold-down clamp. Tighten the clamp bolts enough to hold the battery from moving; overtightening it can crack the battery case.
10. Install the postive battery cable(s), then the negative battery cable(s). Tighten cable clamp bolts to 60-90 in.-lb. (6.7-10 N•m).

CAUTION

Be sure the battery cables are connected to their proper terminals. Connecting the battery backwards will reverse the polarity and can damage the alternator.

11. Coat the battery cable connections with a petroleum jelly such as Vaseline or a light mineral grease.
12. If the battery has removable filler caps, check the electrolyte level. The electrolyte should cover the battery plates by at least 1/4 in. (6 mm). See **Figure 7**. Top up with distilled water to the bottom of the fill ring in each cell, if necessary.

Unsealed Battery Testing

This procedure applies to batteries with removable filler caps.

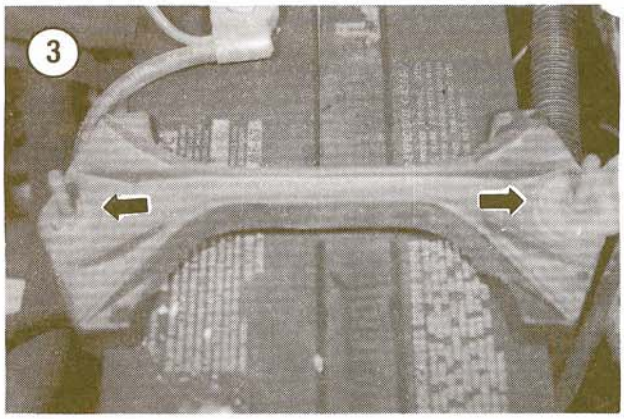

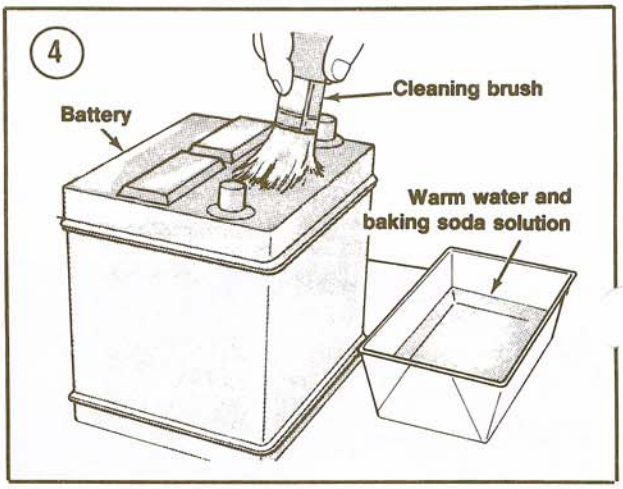

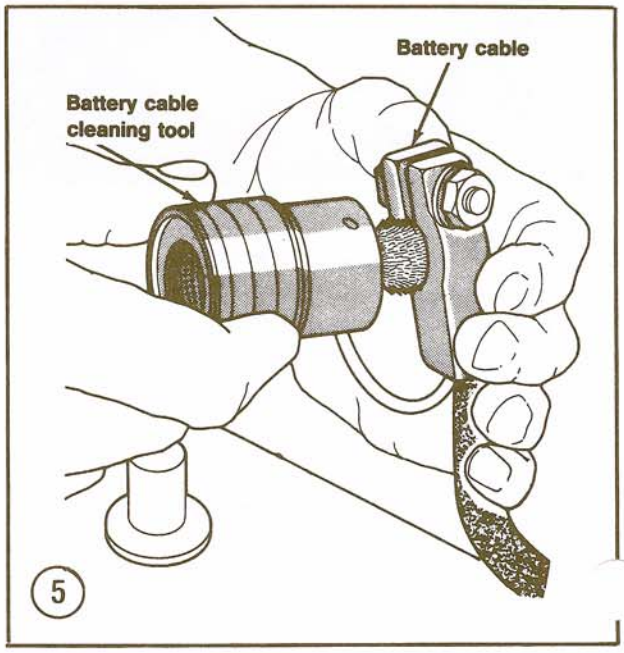

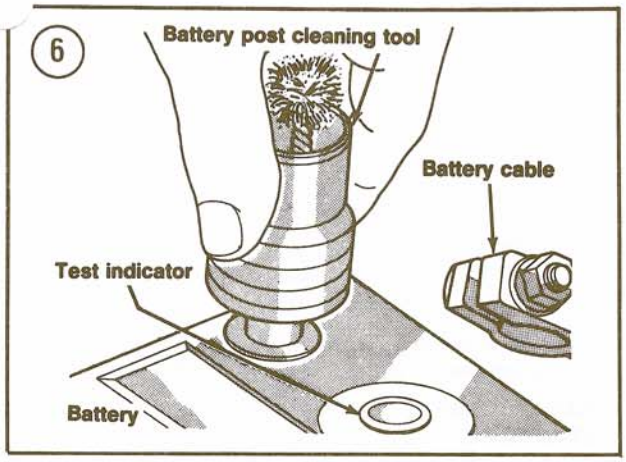

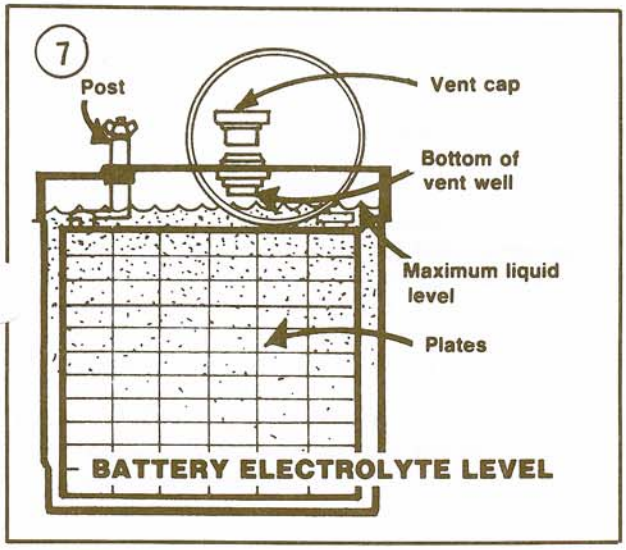

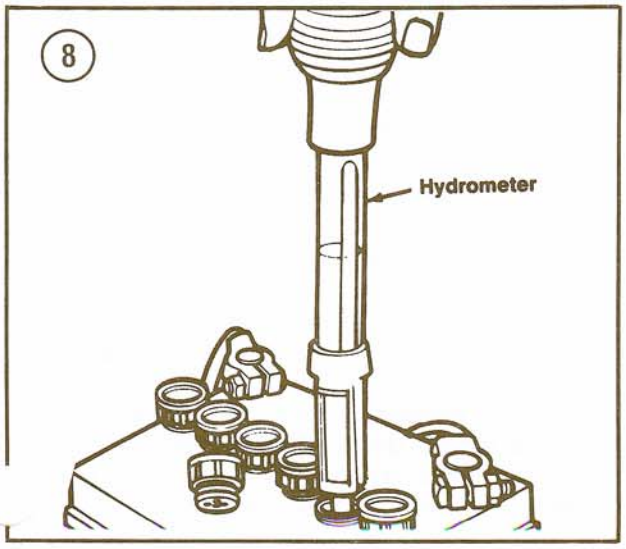

Hydrometer testing is the best way to check battery condition. Use a hydrometer with numbered gradations from 1.100-1.300 rather than one with just color-coded bands. To use the hydrometer, squeeze the rubber ball, insert the tip in a cell and release the ball (**Figure 8**).

Draw enough electolyte to float the weighted float inside the hydrometer. Note the number in line with the surface of the electrolyte. This is the specific gravity for the cell. Return the electrolyte to the cell from which it came.

The specific gravity of the electrolyte in each battery cell is an excellent indicator of that cell's condition. A fully charged cell will read 1.260 or more at 68° F (20° C). If the cells test below 1.200, the battery must be recharged. Charging is also necessary if the specific gravity varies more than 0.050 from cell to cell.

NOTE

If a temperature-compensated hydrometer is not used, add 0.004 to the specific gravity reading for every 10° above 80° F (25° C). For every 10° below 80° F (25° C), subtract 0.004.

8

Maintenance-free Battery Testing

Sealed maintenance-free batteries require different testing procedures. A maintenance-free battery case generally contains a visual test indicator (**Figure 9**). This test indicator is a built-in hydrometer installed in one cell. It provides visual information on battery condition for testing only and should not be used as a basis for determining whether the battery is properly charged or discharged, good or bad.

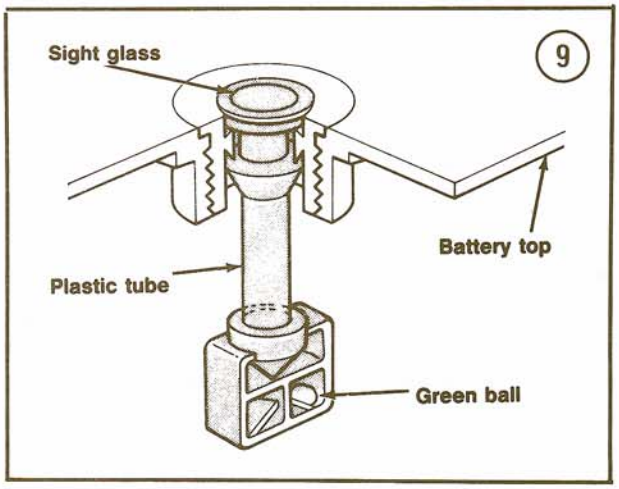

To use the test indicator, make sure the battery is level and the test indicator sight glass is clean. If necessary, wipe the sight glass with a paper towel moistened with water. A penlight is often useful under dim lighting conditions to determine the indicator color. Look down into the sight glass and refer to **Figure 10**. If the dot appears green in color, the battery has a sufficient charge for testing. If it appears dark or black, charge the battery before testing. A clear or light yellow appearance indicates that the battery should be replaced and the charging system checked. Do not charge, test or jump start the battery when the sight glass appears light yellow in color.

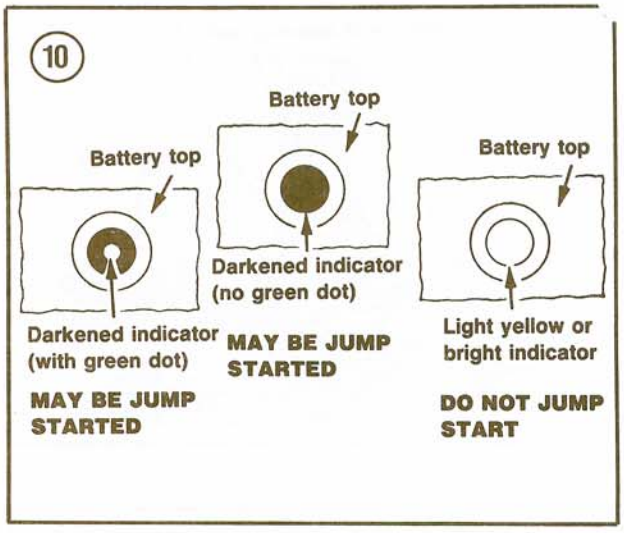

Open Circuit Voltage Test (Maintenance-free Batteries)

This procedure applies to sealed batteries without removable filler caps. The use of a digital voltmeter capable of reading to 1/100 volt is recommended to read open circuit voltage accurately. The relationship between open circuit voltage (OCV) and battery specific gravity is a straight-line function. To determine the state of charge or specific gravity of a maintenance-free battery, perform the test below and refer to **Table 1**.

1. The battery surface charge must be removed if the vehicle has just been driven. Turn the headlights on for 20 seconds.
2. Turn the headlights off and wait a minimum of 5 minutes.
3. Connnect a digital voltmeter across the negative and positive battery terminals to determine open circuit voltage.
4. Compare the reading to **Table 1**. If the battery is at or near full charge, the voltmeter should read 12.5 volts or more.
5. If the battery open circuit voltage is below 9.6 volts at an approximate outside temperature of 70° F (21° C), charge the battery for 20 minutes at 35 amps and repeat the test. If the battery again fails the test, replace it.

Safety Precautions

When working with batteries, use extreme care to avoid spilling or splashing the electrolyte. This solution contains sulfuric acid, which can ruin clothing and cause serious chemical burns. If any electrolyte is spilled or splashed on clothing or skin, immediately neutralize with a solution of baking soda and water, then flush with an abundance of clean water.

WARNING

Electrolyte splashed into the eyes is extremely dangerous. Safety glasses should always be worn while working with batteries. If electrolyte is splashed into the eyes, call a physician immediately, force the eyes open and flood with cool, clean water for approximately 5 minutes.

If electrolyte is spilled or splashed onto any surface, it should be immediately neutralized with baking soda and water solution and then rinse with clean water.

While batteries are being charged, highly explosive hydrogen gas forms in each cell. Some of this gas escapes through filler cap openings (unsealed battery) or vent openings (sealed battery) and may form an explosive atmosphere in and around the battery. This condition can persist for several hours. Sparks, an open flame or a lighted cigarette can ignite this gas, causing an internal battery explosion and possible serious personal injury.

Take the following precautions to prevent an explosion:

1. Do not smoke or permit any open flame near any battery being charged or which has been recently charged.
2. Do not disconnect live circuits at battery terminals, since a spark usually occurs when a live circuit is broken. Take care when connecting or disconnecting any battery charger. Be sure its power switch is off before making or breaking

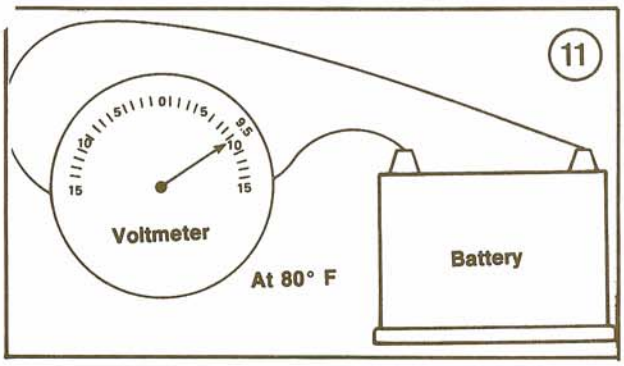

connections. Poor connections are a common cause of electrical arcs which cause explosions.

WARNING

With the diesel engine, the starter relay acts primarily as a junction block and there is power to the starter at all times. Always disconnect the battery before disconnecting cables at the starter relay. If you ground the battery by disconnecting relay wires with the battery connected, nearly 1,000 amps will go to ground—melting your wrench, possibly damaging the engine and electrical system and causing serious personal injury.

Charging

A good state of charge should be maintained in batteries used for starting. Check the battery with a voltmeter as shown in **Figure 11**. Any battery that cannot deliver at least 9.6 volts under a starting load should be recharged. If recharging does not bring it up to strength or if it does not hold the charge, replace the battery.

A cold battery will not accept a charge readily. If the temperature is below 40° F (5° C), the battery should be allowed to warm up to room temperature before charging.

The battery does not have to be removed from the vehicle for charging. Just make certain that the area is well-ventilated and there there is no chance of sparks or flames occuring near the battery.

WARNING

Charging batteries give off highly explosive hydrogen gas. If this explodes, it may spray battery acid over a wide area. Refer to ***Safety Precautions*** *in this chapter for the steps necessary to prevent battery explosions.*

Disconnect the negative battery cable first, then the positive cable. On unsealed batteries, make sure the electrolyte is fully topped up. Remove the vent caps and place a folded paper towel over the vent openings to absorb any electrolyte that may spew as the battery charges.

Connect the charger to the battery—negative to negative, positive to positive. If the charger output is variable, select a high setting (30-40 amps), set the charger voltage regulator to 12 volts and plug the charger in. Let the battery charge for 30 minutes, then reduce the charge rate to 5-10 amps.

Once the battery starts to accept a charge, the charge rate should be reduced to a level that will prevent excessive gassing and electrolyte spewing. This is especially important with sealed batteries, as excessive gassing will reduce the amount of electrolyte (which cannot be replaced) in the battery cells.

The length of time required to recharge a battery depends upon its size, state of charge and temperature. Generally speaking, the current input time should equal the battery amp-hour rating. For example, a 45 AH battery will require a 9-amp charging rate for 5 hours ($9 \times 5 = 45$) or a 15-amp rate for 3 hours ($15 \times 3 = 45$). On unsealed batteries, check charging progress with the hydrometer. **Table 2** gives approximate state of charge according to specific gravity.

Jump Starting

If the battery becomes severely discharged on the road, it is possible to start and run a vehicle by jump starting it from another battery. If the proper procedure is not followed, jump starting can be dangerous.

Although diesel powered vehicles use two 12-volt batteries, they are connected in parallel, *not in series*. A single 12-volt booster battery should be used for jump starting. *Do not* connect a 24-volt power source. When jump starting a diesel vehicle, connect the booster battery to the left-hand battery (**Figure 1**) for lowest circuit resistance. *Do not* mistake the No. 1 or No. 2 glow plug relays (**Figure 1**) for starter relays. Connecting jumper cables to either glow plug relay will cause expensive damage to the glow plug system.

Before jump starting an unsealed battery when temperatures are 32° F (0° C) or lower, check the condition of the electrolyte. If it is not visible or if it appears to be frozen, do *not* attempt to jump start the battery, as the battery may explode or

rupture. Do *not* jump start sealed batteries when the temperature is 32° F (0° C) or lower.

WARNING

Use extreme caution when connecting a booster battery to one that is discharged to avoid personal injury or damage to the vehicle.

1. Position the 2 vehicles so that the jumper cables will reach between batteries, but the vehicles do not touch. Set the parking brake on each vehicle.

CAUTION

Do not disconnect the battery of the vehicle to be started. This could damage the electronic ignition module or vehicle electrical system.

2. Turn on the heater blower motor of the vehicle to be started. Make sure all other switches and lights are turned off.
3. Connect the jumper cables in the order and sequence shown in **Figure 12.**

WARNING

An electrical arc may occur when the final connection is made. This could cause an explosion if it occurs near the battery. For this reason, the final connection should be made to the alternator mounting bracket or another good engine ground and not the battery itself.

4. Check that all jumper cables are out of the way of moving parts on both engines.
5. Start the vehicle with the good battery and run the engine at a moderate speed.
6. Start the vehicle with the discharged battery. Once the engine starts, run it at a moderate speed.

CAUTION

Racing the engine may cause damage to the electrical system.

7. Remove the jumper cables in the exact reverse order shown in **Figure 12.** Begin at point No. 4, then 3, 2 and 1.

Replacement Batteries

A replacement battery should have sufficient power to handle the engine's cranking requirements. As a general rule, the battery's cold cranking capacity should equal the engine displacement in cubic inches.

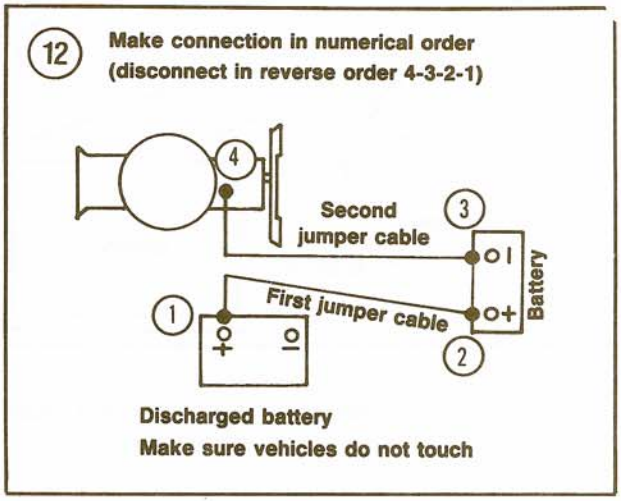

CHARGING SYSTEM

All gasoline and 2.2L diesel vehicles use an EVR (external voltage regulator) charging system. The 2.3L turbo diesel uses an IVR (internal voltage regulator) charging system.

The basic charging system consists of the battery, alternator, voltage regulator, charge indicator lamp (or ammeter), fuse link and connecting wiring.

Alternator

The alternator is a 3-phase current generator consisting of a stationary armature (stator), a rotating field (rotor) and a rectifying bridge of silicon diodes. The alternator generates alternating current which is converted to direct current by the silicon diodes for use in the vehicle's electrical circuits. Alternator output is regulated by the voltage regulator to keep the battery charged. The alternator is mounted on the front of the engine and is belt-driven by the crankshaft pulley. **Figure 13** shows a typical alternator installation.

Testing

The first indication of charging system trouble is usually a slow engine cranking speed during starting or headlights that dim as engine speed decreases. This will often occur long before the charge warning light or ammeter indicates that there is a potential problem. When charging system trouble is first suspected, perform the following checks.

1. Check the alternator drive belt for correct tension (Chapter Three).

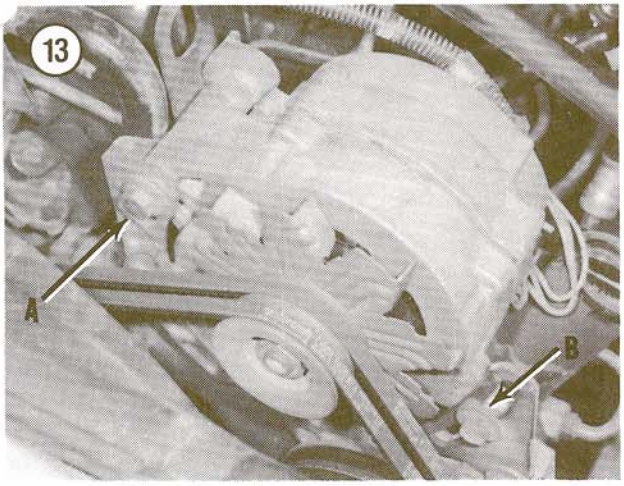

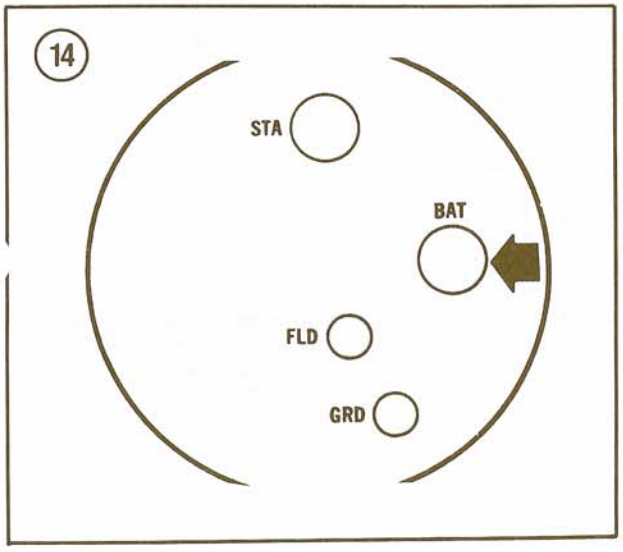

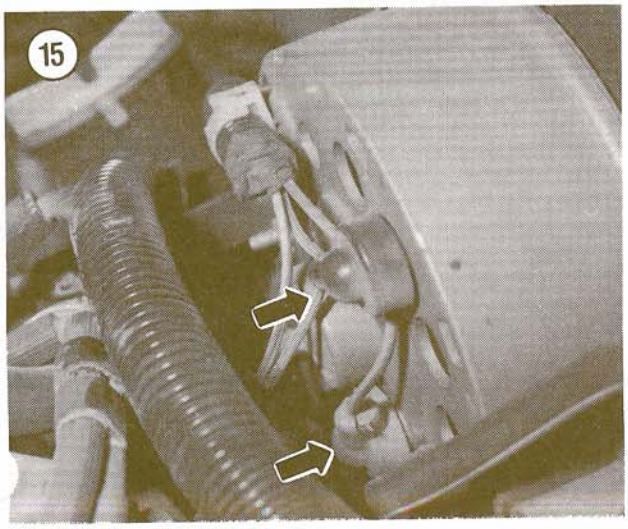

2. Check the battery to make sure it is in satisfactory condition, fully charged and that all connections are clean and tight.
3. Check all connections at the alternator and voltage regulator to make sure they are clean and tight.

NOTE

*If locating the fusible link in Step 4 proves difficult in some engine compartments, connect a voltmeter between a good engine ground and the alternator BAT terminal (**Figure 14**). If the meter shows no voltage reading, the fusible link is probably burned out and should be replaced.*

4. Check the fusible link located in the line between the starter relay and the alternator. If burned, determine the cause and correct it, then install a new fusible link.

If there are still indications that the charging system is not performing as it should after each of the above points has been carefully checked and any unsatisfactory conditions corrected, refer to Chapter Two for troubleshooting procedures.

8

Alternator
Removal/Installation

This procedure is generalized to cover all applications. On some models, the alternator is mounted low on the engine under other accessory units and can only be reached from underneath the vehicle. Access to the alternator may be quite limited in some engine compartments and care should be taken to avoid personal injury during this procedure.

1. Disconnect the negative battery cable(s).
2. Loosen the alternator pivot bolt (A, **Figure 13**). Remove the adjusting bolt (B, **Figure 13**).
3. Disengage the alternator drive pulley from the ribbed poly drive belt.
4. Disconnect the wiring connector and wires from the back of the alternator (**Figure 15**).
5. Remove the alternator pivot bolt (A, **Figure 13**). Remove the alternator from the mounting bracket.
6. Installation is the reverse of removal. Adjust belt tension as described in *Drive Belts*, Chapter Three. Tighten the adjusting bolt to 24-40 ft.-lb. (33-54 N•m) and the pivot bolt to 40-50 ft.-lb. (54-68 N•m).

External Regulator Removal/Installation

The external voltage regulator (**Figure 16**) is used with all gasoline and 2.2L diesel engines. Three different regulator calibrations are used: 2 for gasoline engines and 1 for the 2.2L diesel. Regulators are color-coded according to application. Black is for use with warning light systems; gray is for use with ammeter gauge systems and neutral (clear) can be used with either system. Regulators are nonadjustable and serviced by replacement only.

1. Disconnect the negative battery cable(s).
2. Insert the tip of a wide-blade screwdriver between the regulator and the raised tab on the connector plug (**Figure 17**). Twist the screwdriver counterclockwise and disconnect the regulator plug.

CAUTION

The regulator is grounded by the mounting screws. Removing the regulator before disconnecting the wiring plug will destroy it if the ignition switch is ON.

3. Remove the regulator mounting screws and regulator. Remove the regulator.
4. Clean the mounting surface with emery paper to assure a good ground.
5. Installation is the reverse of removal.

Internal Regulator Replacement

1. Remove the alternator as described in this chapter.
2. Remove the 4 Torx-head regulator attaching screws with a T-20 driver. Remove the regulator/brush holder assembly. See **Figure 18**.
3. Remove the A terminal insulator and 2 Torx-head screws holding the regulator to the brush holder. When the regulator is separated from the brush assembly, the brushes and springs will come out of the holder. See **Figure 19**.
4. Reinstall the springs and brushes in the brush holder, then insert a 1 3/8 in. length of stiff insulated wire into the brush holder pin hole to retain the brushes in place. See **Figure 20**.
5. Insert the nut/washer assemblies in their brush holder retaining slots. Fit each brush terminal into its slot between the holder and washer.
6. Fit the new regulator to the brush holder (**Figure 21**). Install and tighten screws to 20-30 in.-lb. (2.3-3.4 N•m).

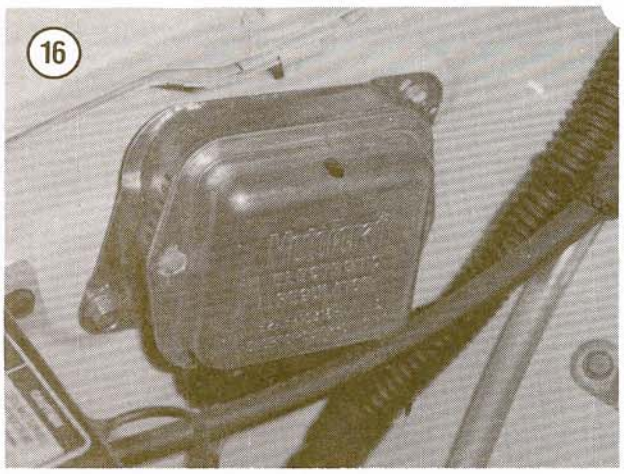

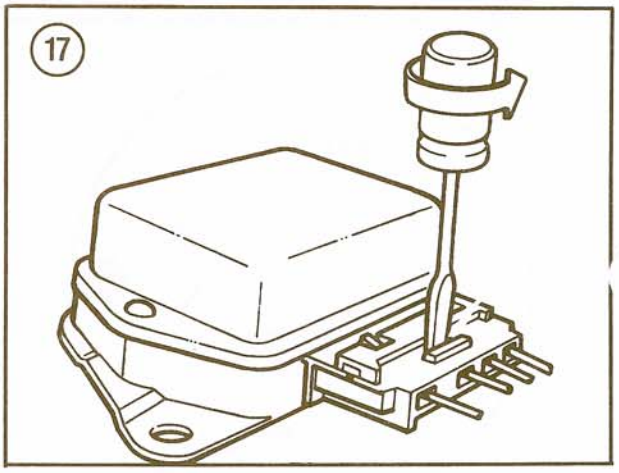

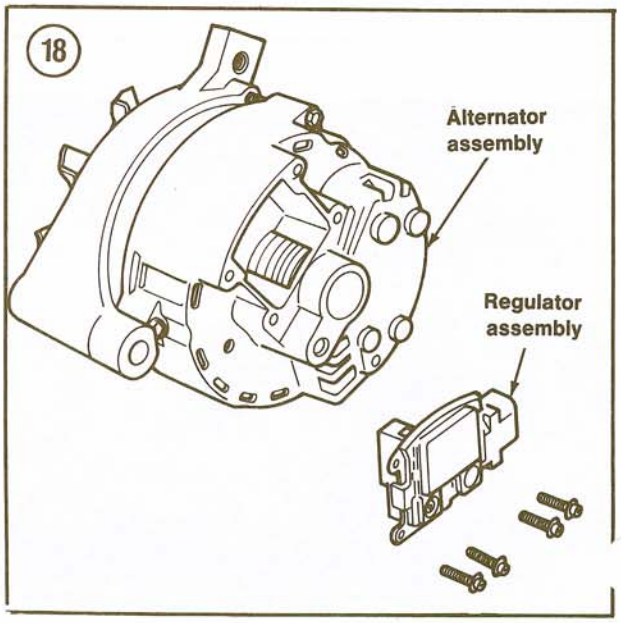

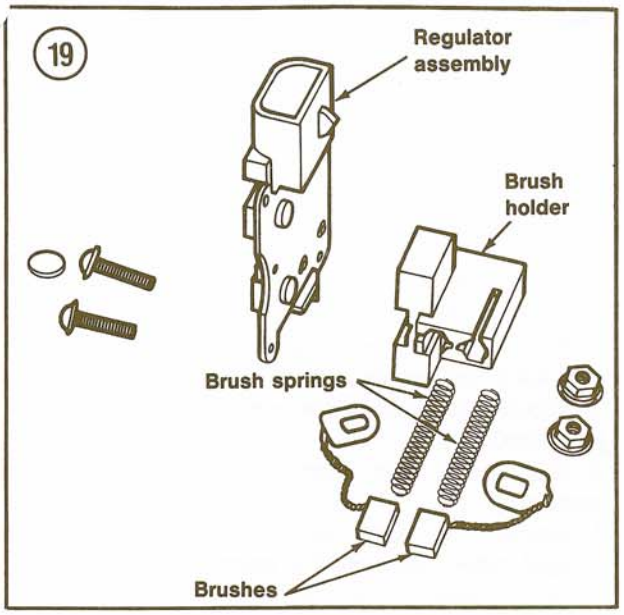

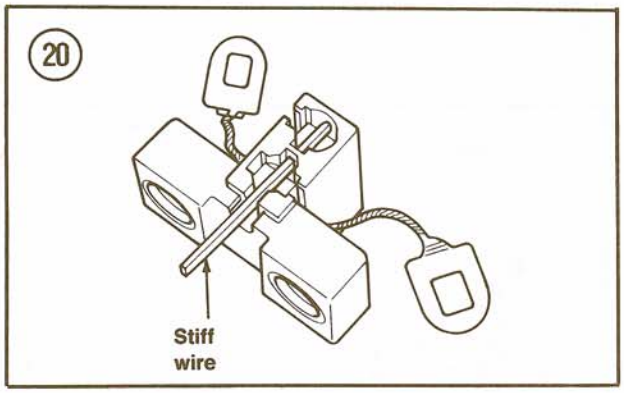

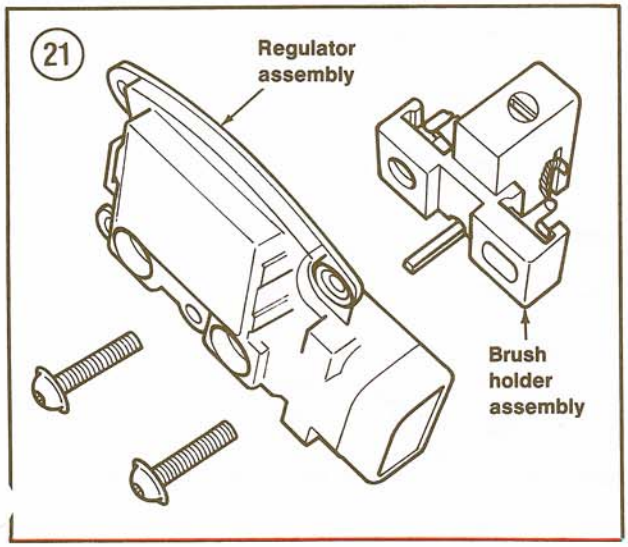

7. Loop the brush leads toward the brush end of the holder and install the adhesive-backed insulator on the A terminal screw head.
8. Clean the alternator and regulator/brush holder mounting surfaces of all contamination.
9. Fit the regulator/brush holder to the alternator and tighten the screws to 25-35 in.-lb. (2.8-4.0 N•m).

CAUTION

Do not omit Step 10. If the wire is not removed, it will cause a short circuit, destroying the regulator.

10. Remove the wire inserted in Step 4 to retain the brushes, then apply a dab of waterproof (not silicone) sealer over the pin hole in the brush holder.

STARTER

A Motorcraft positive engagement starter with a separate starter relay mounted on the fender apron (**Figure 22**) is used on all gasoline models.

A gear reduction starter with attached solenoid is used with diesel engines. The No. 1 glow plug relay is bracket-mounted to the starter/solenoid assembly on diesel engines. Although the attached solenoid performs the function of the separate starter relay used with gasoline engines, the relay is also installed. A link on the solenoid connects its B terminal with the solenoid windings (**Figure 23**). When the ignition switch is turned to the START position, the relay sends battery current to the solenoid through this link. If solenoid replacement is necessary, the link must be properly installed or the engine cannot be started.

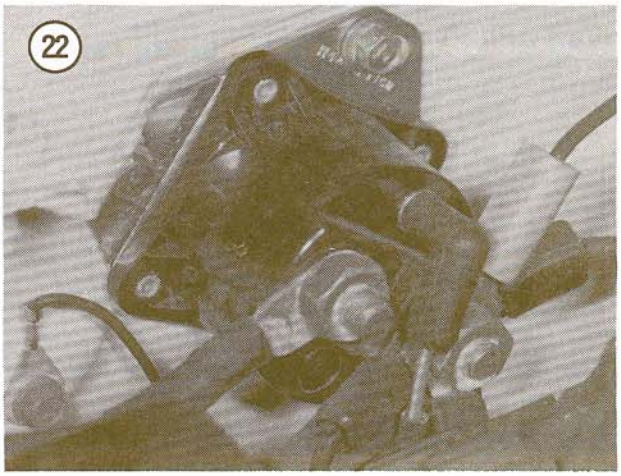

Vehicles equipped with an automatic transmission have a neutral start switch in the starter circuit to prevent starter operation unless the selector lever is in the NEUTRAL or PARK position.

A clutch interlock switch is used in the starter circuit of 1985-on vehicles equipped with a manual transmission to prevent starter operation unless the clutch pedal is fully depressed.

Starter service requires experience and special tools. Removal/installation and brush replacement procedures are described below. Troubleshooting procedures are given in Chapter Two. Any repairs inside the unit itself (other than brush replacement) should be done by a dealer or automotive electrical shop; installation of a rebuilt unit is generally more practical.

Starter Relay
Removal/Installation

WARNING

With the diesel engine, the starter relay acts primarily as a junction block and there is power to the starter at all times. Always disconnect the battery before disconnecting cables at the starter relay. If you ground the battery by disconnecting relay wires with the battery connected, nearly 1,000 amps will go to ground—melting your wrench, possibly damaging the engine and electrical system and causing serious personal injury.

Refer to **Figure 22** for this procedure.

1. Disconnect the negative battery cable.
2. Disconnect the ignition switch and coil wires from the relay terminals.
3. Remove the nuts holding the starter and battery cables to the relay. Disconnect the cables.
4. Remove the screws holding the relay to the fender apron and remove the relay.
5. Installation is the reverse of removal.

Starter Removal/Installation
(Gasoline Engine)

Refer to **Figure 24** for this procedure.

1. Disconnect the negative battery cable.
2. Set the parking brake and place the transmission in PARK (automatic) or 1st gear (manual).
3. Raise the front of the vehicle and place it on jackstands.
4. Disconnect the starter cable at the starter terminal.
5. Remove the starter mounting bolts. Remove the ground cable. Remove the starter.
6. Installation is the reverse of removal. Tighten the mounting bolts to 15-20 ft.-lb. (21-27 N•m). Tighten the starter-to-relay screw to 70-110 in.-lb. (8-12 N•m).

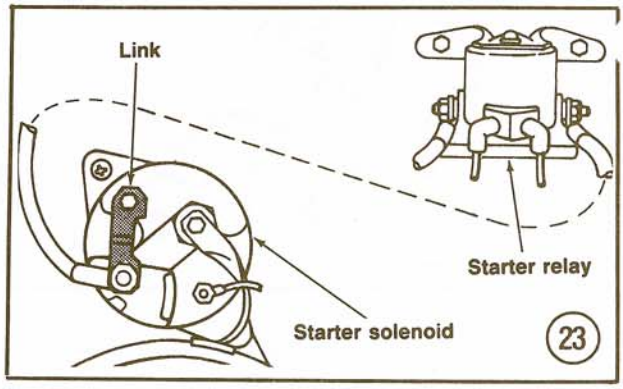

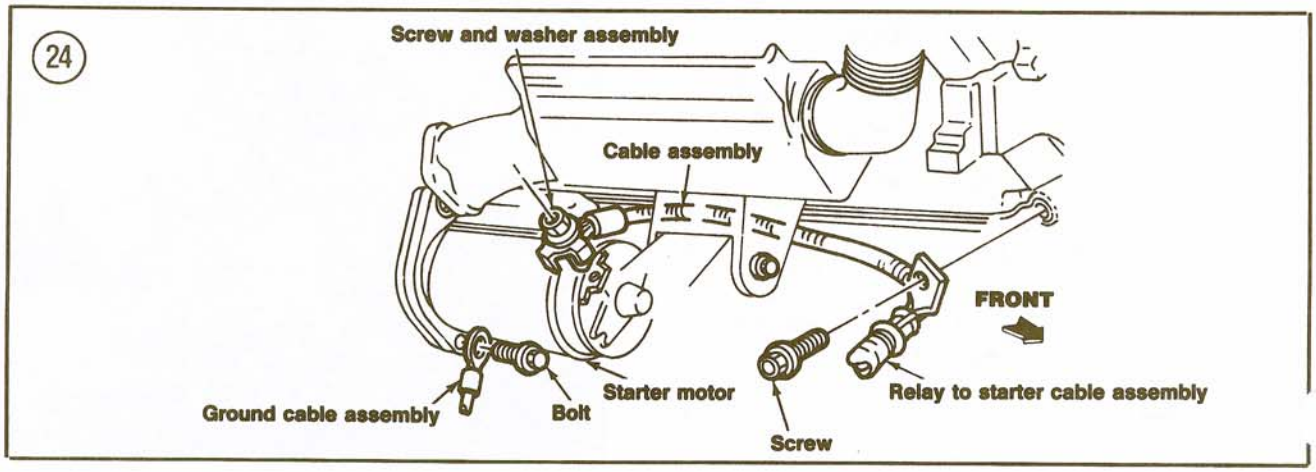

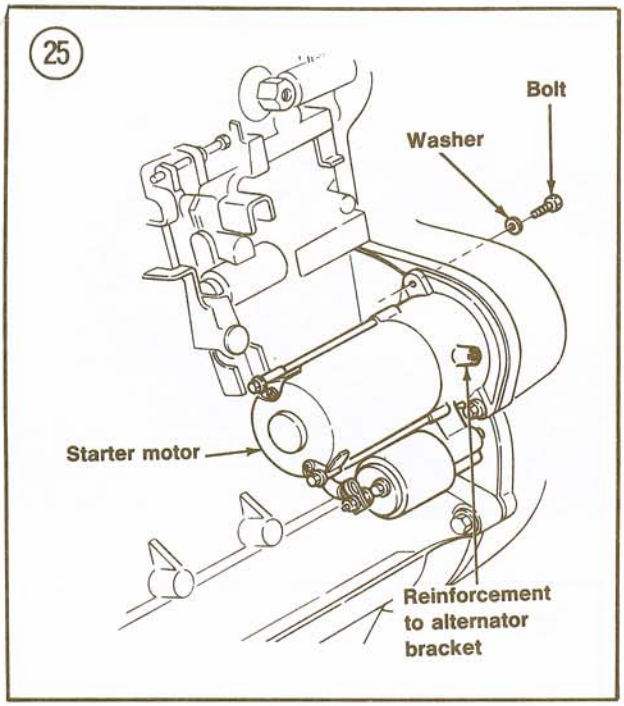

Starter Removal/Installation (Diesel Engine)

Refer to **Figure 25** for this procedure.

1. Disconnect the negative battery cables.
2. Disconnect and remove the air intake hose between the intake manifold and air cleaner.
3. Remove the No. 1 glow plug relay from the starter and place to one side out of the way.
4. Disconnect the wires at the solenoid terminals.
5. Remove the alternator reinforcement bracket bolt. Remove the 2 starter mounting bolts. Remove the starter.
6. Installation is the reverse of removal. Tighten the mounting bolts to 16-23 ft.-lb. (22-31 N•m) and the terminal nuts to 80-120 in.-lb. (9-13 N•m).

Starter Brush Replacement (Gasoline Engine Starter)

Brush replacement requires partial disassembly of the starter. Always install a complete set of new brushes. Refer to **Figure 26** for this procedure.

8

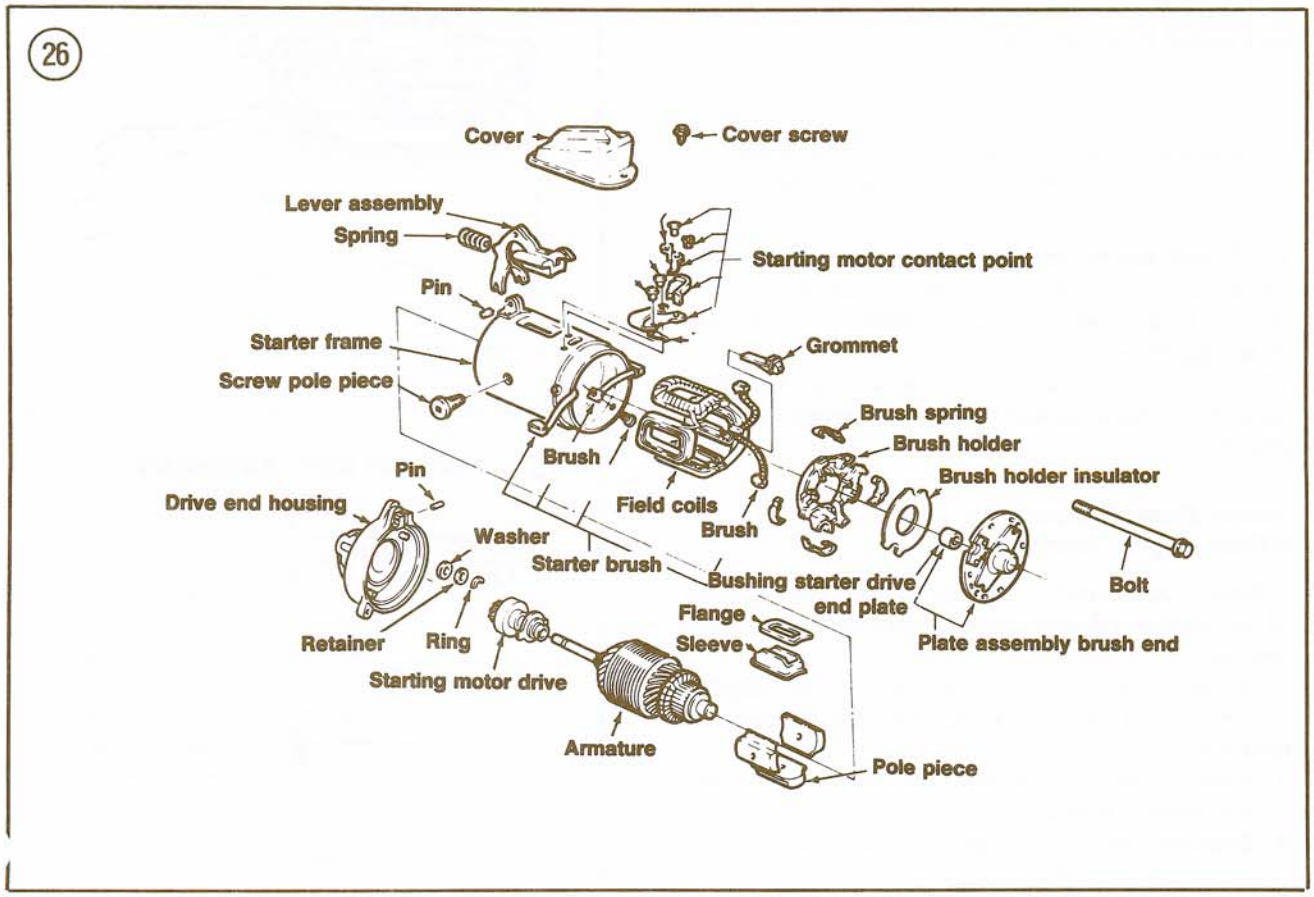

1. Remove the starter as described in this chapter.
2. Remove the cover screw, cover and through-bolts.
3. Note the position of the brushes in the brush holder. Pull back the brush clips with a wire hook, then take the brushes out. See **Figure 27**.
4. Remove the brush end plate, bushing and insulator plate.
5. Note location of the brush holder with respect to the end terminal and remove the brush holder.
6. Inspect the brushes. Replace all brushes if any are worn to 1/4 in. or less in length. Check the plastic brush holder for cracks or broken mounting pads.
7. To replace ground brushes, remove the brush lead attaching screws from the starter frame. Take out the brushes and install new ones.
8. To replace the field coil brushes, cut the insulated brush leads as close as possible to the field coils. Attach new brush leads with the clips provided in the replacement brush kit. Crimp each clip to hold the brush lead to the field coil connection and solder the connection together with rosin core solder and a 300-watt soldering iron.
9. Install the brush holder. Insert brushes in holder and install brush springs.

NOTE

Position the brush leads in their brush holder slots correctly to prevent a potential ground.

10. Install the brush insulator, bushing and plate.
11. Install and tighten the through-bolts to 55-75 in.-lb. (6-8 N•m). Install cover and tighten attaching screw.
12. Connect the starter to a battery to check its operation, then install it as described in this chapter.

Starter Brush Replacement (Diesel Engine Starter)

Brush replacement requires partial disassembly of the starter. Always install a complete set of new brushes.
1. Remove the starter as described in this chapter.
2. Disconnect the field strap from the solenoid M terminal.
3. Remove the 2 screws holding the solenoid to the starter motor. Remove the solenoid.
4. Remove the 2 through bolts and 2 end cap screws. Remove the end cap.

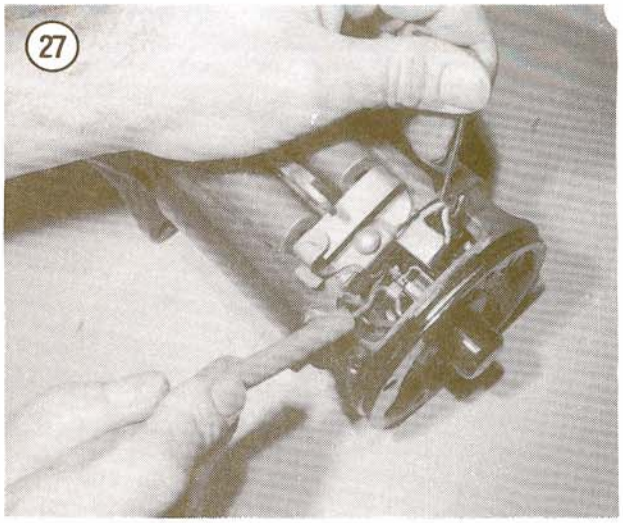

27

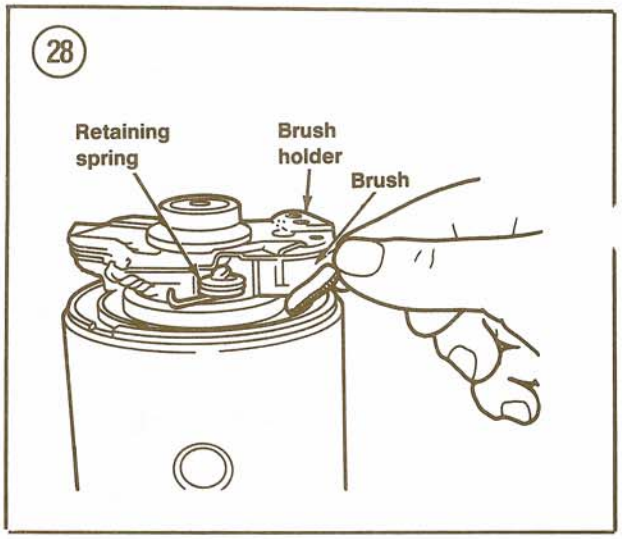

28

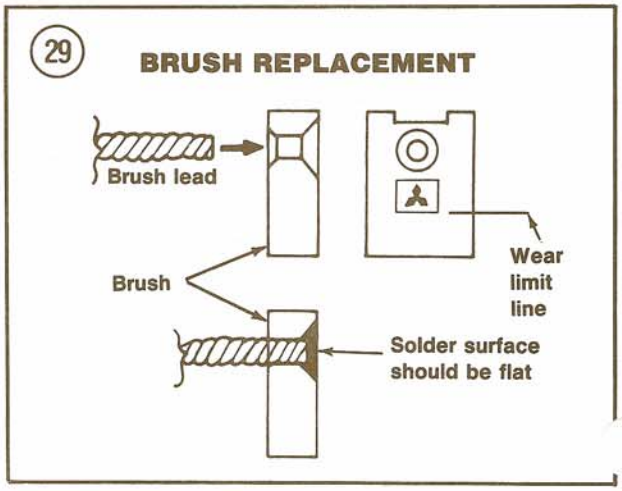

29

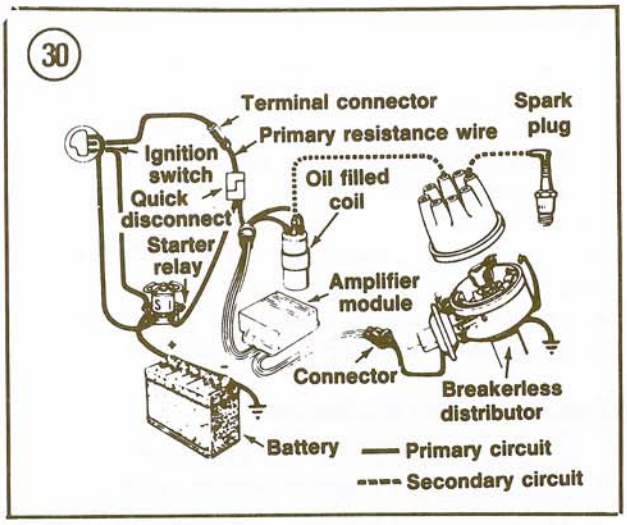

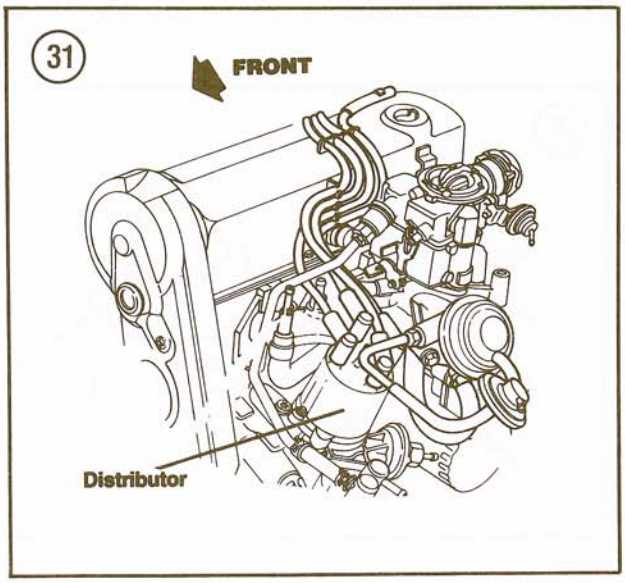

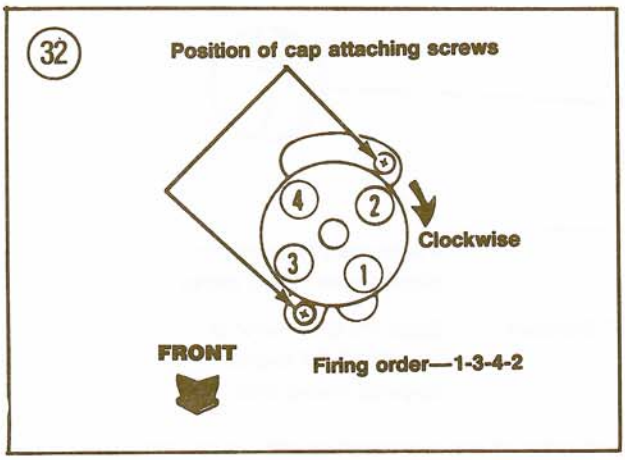

5. Pry each brush holder retaining spring back and remove the brushes, then remove the brush holder. See **Figure 28**.
6. If any brush is worn down to the wear limit line (**Figure 29**), crush the brush with pliers to remove it from the brush lead.
7. Clean the brush lead wire, then install a new brush on the wire with small taper side of hole facing wire. See **Figure 29**.
8. Carefully solder the brush and lead wire together. Make sure the solder surface is flat (**Figure 29**).
9. Repeat Steps 6-8 to replace all remaining brushes.
10. Reverse Steps 1-5 to complete installation. Tighten all bolts to 5-7 ft.-lb. (7-9 N•m). Tighten the M terminal nut to 80-120 in.-lb. (9-13 N•m).

DURA-SPARK II IGNITION SYSTEM

8

A Dura-Spark II ignition system is used on all 1983-1984 4-cylinder and 1985-on 2.0L engines. Some models use a Dura-Spark II ignition system with a universal ignition module (UIM). This module is capable of providing spark timing retard at the direction of the microprocessor control unit (MCU).

The Dura-Spark II ignition system (**Figure 30**) consists of the battery, breakerless distributor, ignition coil, ignition switch, ignition module, spark plugs and connecting wiring.

Distributor Removal/Installation

The distributor is mounted near the front of the engine block on the driver's side between the fuel pump and oil filter. See **Figure 31**.

1. Disconnect the negative battery cable.
2. Remove the alternator adjusting bolt and loosen the pivot bolt. Swing the alternator to one side and move the drive belt out of the way.
3. Loosen the distributor cap attaching screws and remove the cap with the spark plug wires attached. Place the cap and wires to one side out of the way.
4. Turn the engine over by hand until the No. 1 cylinder is at top dead center on its compression stroke. The timing mark and pointer will align and the distributor rotor will point to the No. 1 terminal in the distributor cap (**Figure 32**).
5. Disconnect the vacuum advance hose at the distributor vacuum advance unit.

6. Separate the distributor wiring harness connector (**Figure 33**).
7. Make sure the stator assembly pole aligns with an armature tooth. See **Figure 34**. Each 1/2 tooth equals 7 3/4° of engine timing.
8. Scribe marks on the distributor housing and engine block to indicate the position of the rotor in the distributor and the position of the distributor in the engine.
9. Remove the distributor hold-down bolt and clamp. Remove the distributor from the engine.
10. Installation is the reverse of removal. If the engine has been turned over with the distributor out, repeat Step 4. Align the distributor and block marks made in Step 8. When the distributor engages the auxiliary shaft gear, the rotor will turn slightly and the distributor will seat fully. Start the engine and check ignition timing as described in Chapter Three.

Ignition Coil Replacement

A special connector attaches the primary lead to the coil. See **Figure 35** for the proper removal method.
1. Disconnect the negative battery cable.
2. Disconnect the primary and secondary leads from the coil.
3. Remove the 2 retaining screws holding the coil and bracket to the fender apron.
4. Loosen the bracket clamp and remove the coil.
5. Installation is the reverse of removal.

Ignition Module Replacement

Refer to **Figure 36** for this procedure.
1. Disconnect the negative battery cable.
2. Disconnect the module harness connectors.
3. Remove the module mounting fasteners. Remove the module.

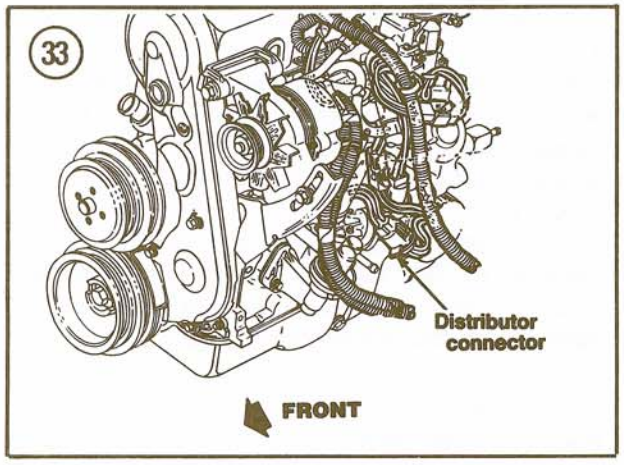

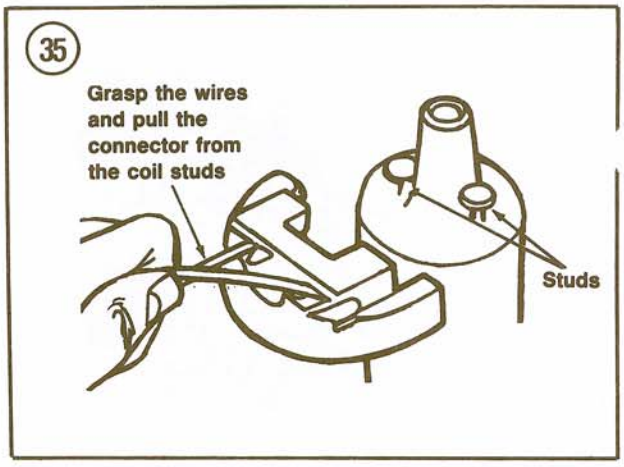

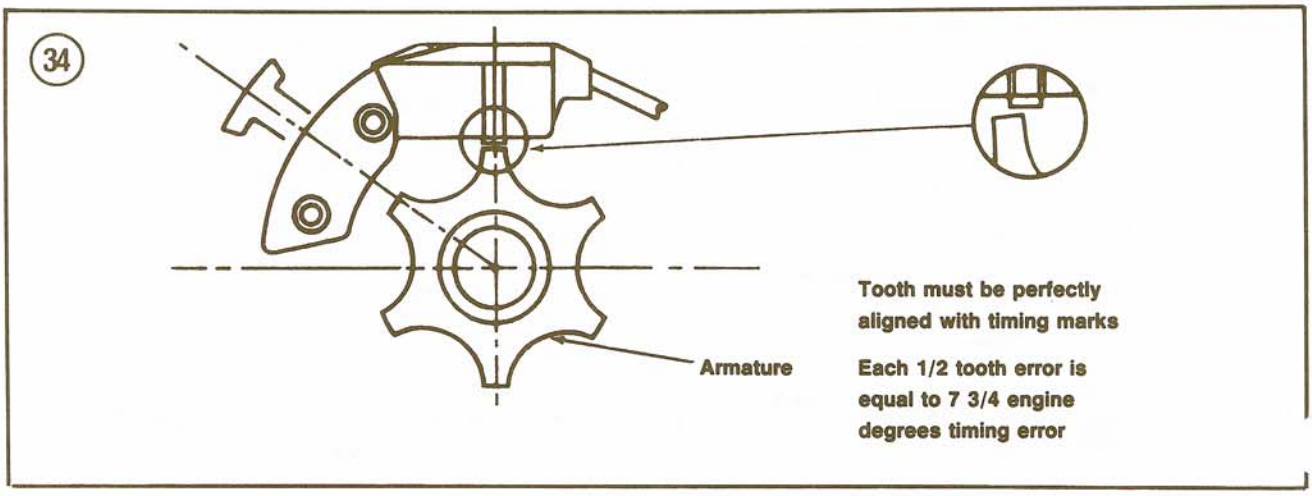

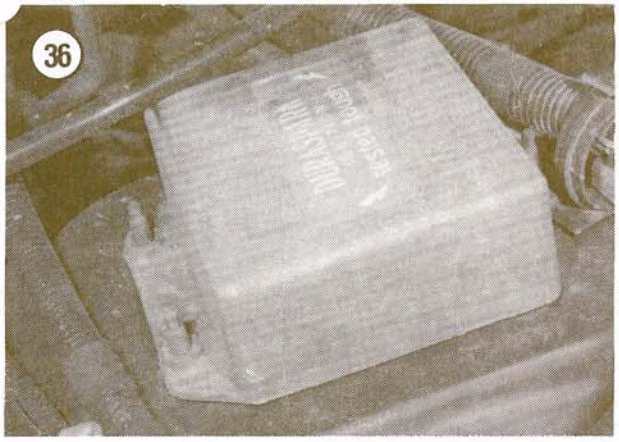

4. Installation is the reverse of removal. Fill connectors with silicone compound (part No. D7AZ-19A331-A) or equivalent before reconnecting them.

TFI-IV IGNITION SYSTEM

All V6 and 1985-on 2.3L EFI engines use a Thick Film Integrated (TFI) ignition system with a Universal distributor and E-core ignition coil. **Figure 37** shows the V6 system; **Figure 38** shows the EFI system.

The TFI-IV ignition is a part of a fourth-generation electronic engine control system

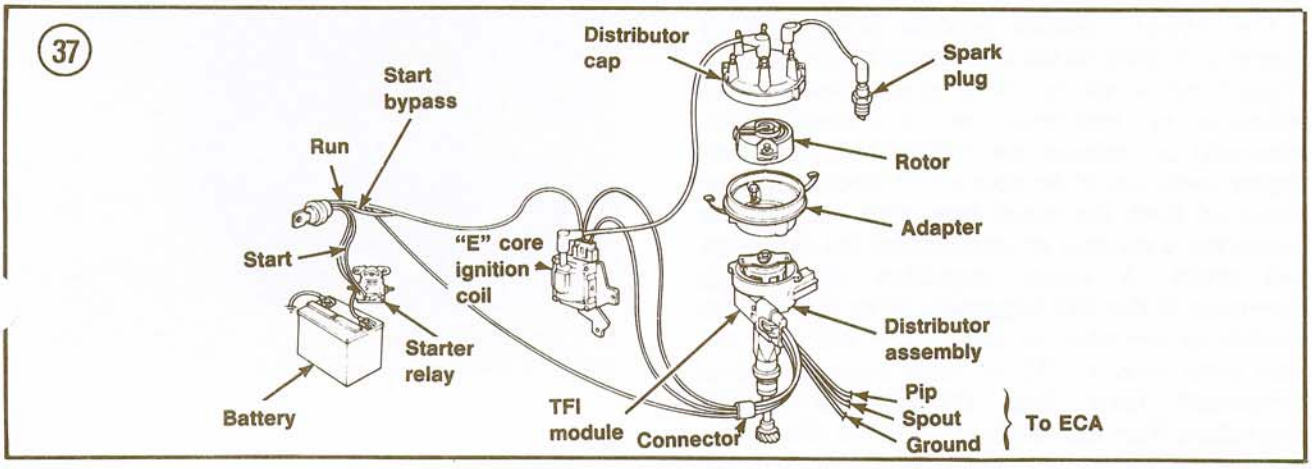

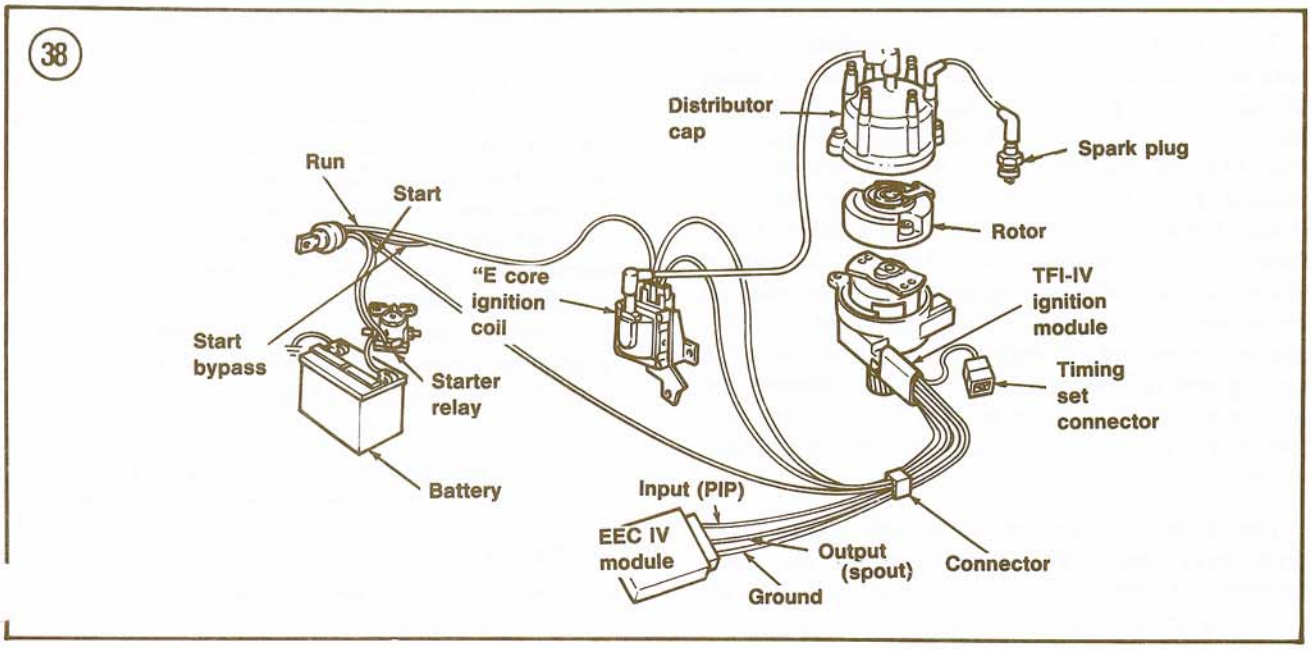

(EEC-IV). The TFI-IV distributor has no centrifugal or vacuum advance mechanism (the advance function is incorporated in the EEC-IV module). A Hall switch in the distributor induces a magnetic signal which is sent to the TFI-IV ignition module. The module triggers the production of high voltage current in the ignition coil. This current runs through the coil wire to the distributor cap, where it is routed to the appropriate spark plug by the rotor. The distributor also contains a profile ignition pickup (PIP) sensor which controls ignition timing. Distributor calibration is not required and timing is required only when the distributor has been removed from the vehicle.

The TFI-IV ignition module (**Figure 39**) is mounted directly to the distributor housing with a retainer but should not be used as a handle when adjusting or removing the distributor. Such treatment can damage the TFI module and affect engine operation. If the plastic TFI module housing separates from the metal base plate next to the connector, a no-start or intermittent run condition will result. A visual inspection can usually determine if this has happened. If so, remove the module as described in this section and coat the base plate with a 1/32 in. thick coat of silicone compound (part No. D7AZ-19A331-A) or equivalent. Reinstall the module to the distributor and tighten the mounting screws to 15-35 in.-lb. (1.7-4.0 N•m).

The TFI ignition coil is also a new design, much smaller than previous coils used. Instead of being oil-filled, it is potted in plastic and has external laminations much like a transformer (**Figure 40**). The TFI coil has the usual 2 primary connections labeled "plus" and "minus" (positive and negative). It also has a secondary connection similar to those used on the distributor cap. The coil harness is designed to allow a tachometer connection without removing the harness. Simply insert an alligator clip in the rear of the connector and hook onto the dark green/yellow dotted wire, then connect the tachometer lead to the clip. The TFI coil has very low primary resistance and is used without a ballast resistor.

The following section describes replacement procedures only. The distributor is the only repairable ignition component; work on it should be entrusted to a dealer or qualified specialist.

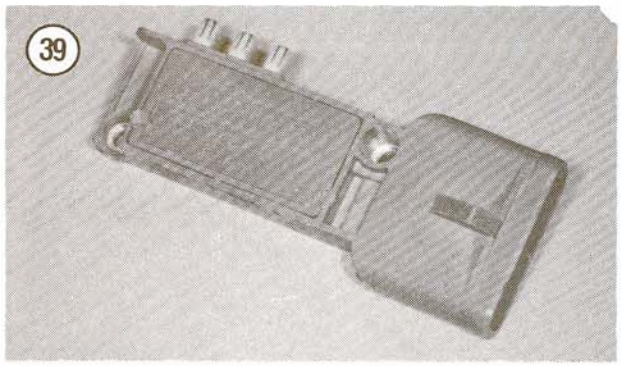

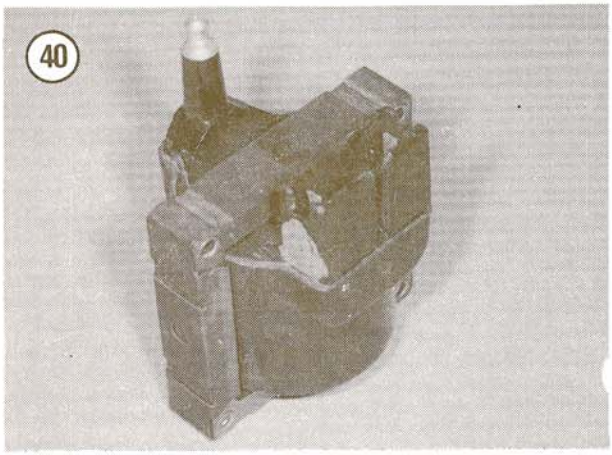

Distributor
Removal/Installation

1. Disconnect the negative battery cable.
2. Turn the engine over by hand until the No. 1 cylinder is at top dead center on its compression stroke. The timing mark and pointer will align and the distributor rotor will point to the No. 1 terminal in the distributor cap.
3. Disconnect the distributor wiring connector.
4. Mark the position of the distributor cap No. 1 spark plug tower on the distributor base for reinstallation reference.
5. Remove the distributor cap and adapter (if used) with wires attached. Position it to one side to provide access for distributor removal.

NOTE

*A security-type hold-down bolt (**Figure 41**) may be used on some engines. To remove this type of bolt in Step 6, use Ford tool part No. T82L-12270-A or equivalent.*

6. Remove the distributor hold-down bolt an clamp. Remove the distributor.

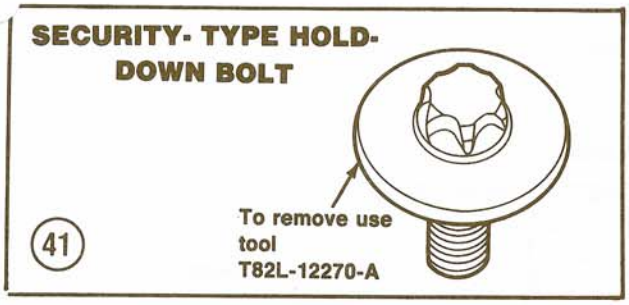

7. Align rotor tip with mark scribed in Step 4, then rotate distributor shaft just enough to align leading edge of Hall switch vane with vane switch stator.
8. Insert distributor in engine and rotate as required to realign leading edge of vane to the vane switch with the rotor blade pointing to the No. 1 spark plug terminal in the distributor cap. When the distributor engages the camshaft (V6) or auxiliary shaft (4-cylinder) gear, the rotor will turn slightly and the distributor will seat fully.
9. Install hold-down clamp and bolt but do not tighten bolt at this time.
10. Connect the distributor wiring connector.
11. Install the distributor adapter (if used) and cap.
12. Start the engine and set base timing as described in Chapter Three.

TFI-IV Module
Removal/Installation

1. Remove the distributor from the engine as described in this chapter.
2. Place distributor on a clean workbench and remove the 2 module attaching screws.

CAUTION

Do not try to remove module without working it off the connector terminals in the distributor base. The terminals will break and you will have to install a new distributor.

3. Carefully pull on the module with a rocking motion to disengage its terminals from the distributor base connectors, then pull the right side of the module downward toward the distributor mounting flange and remove.

NOTE

The module base which mates against the distributor body is covered with silicone grease. Apply the packet of grease accompanying a new module to its base in a uniform 1/32 in. thick layer before installation.

4. Installation is the reverse of removal. Tighten the module mounting screws to 15-35 in.-lb. (1.7-4.0 N•m).

TFI Coil
Removal/Installation

1. Disconnect the coil secondary terminal lead.
2. Unclip and remove the primary lead connector.
3. Remove the attaching screws and coil from the fender apron.
4. Installation is the reverse of removal.

LIGHTING SYSTEM

Headlight Replacement

Individual Type 2B rectangular combination high/low beam lamps are standard on all vehicles. Headlights are controlled by a switch on the instrument panel and dimmer switch on the steering column.

Refer to **Figure 42** for this procedure.

1. Remove the trim ring screws. Remove the trim ring.
2. Remove the retaining ring screws. Remove the retaining ring.
3. Pull the lamp out far enough to unplug the wiring connector assembly at the rear of the lamp.
4. Attach the wiring connector to the new lamp. Place the lamp in position with the number molded into the lens face at the top.
5. Install the retaining ring. Install the headlight trim ring.
6. Check operation of the lights. Have headlight aim checked by a dealer or official lamp adjusting station.

Front Park/Turn
Signal Lamp Replacement

Refer to **Figure 43** for this procedure.

1. Remove the 2 lamp assembly attaching screws. Remove the lamp assembly from the vehicle.
2. Rotate the bulb socket and remove it from the rear of the lamp assembly.
3. Depress bulb in socket, rotate counterclockwise and remove.
4. Installation is the reverse of removal.

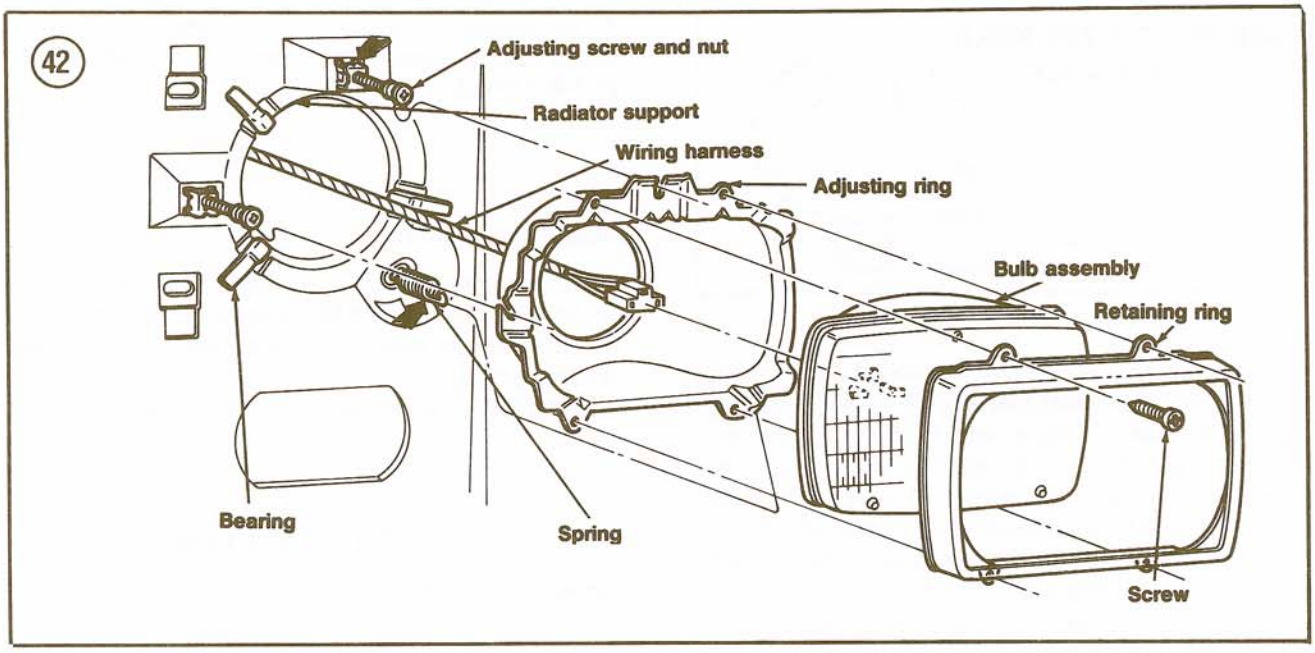

Front Side Marker Lamp Replacement

Refer to **Figure 44** for this procedure.

1. Remove the single lamp assembly screw. Pull lamp assembly out at the top and lift up to clear the tab on the bottom of the lens.
2. Rotate the bulb socket and remove it from the rear of the lamp assembly.
3. Pull bulb from socket and remove.
4. Installation is the reverse of removal.

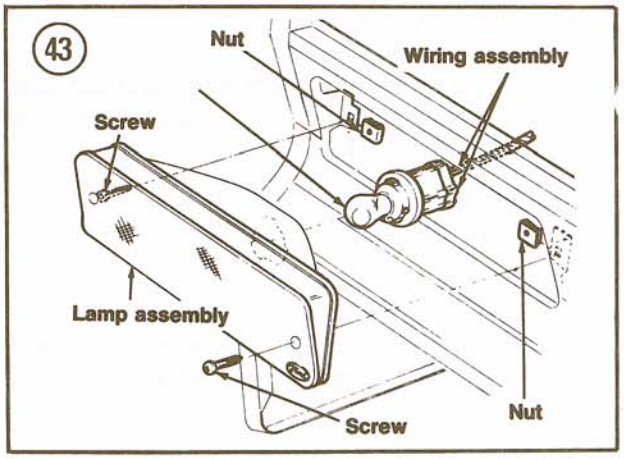

Rear Lamp Assembly Replacement

Refer to **Figure 45** for this procedure.

1. Remove the 4 lamp assembly retaining screws. Remove the lamp assembly.
2. Rotate the 2 bulb sockets and remove from the rear of the lamp assembly.
3. Depress bulb(s) in socket(s), rotate counterclockwise and remove.
4. Installation is the reverse of removal.

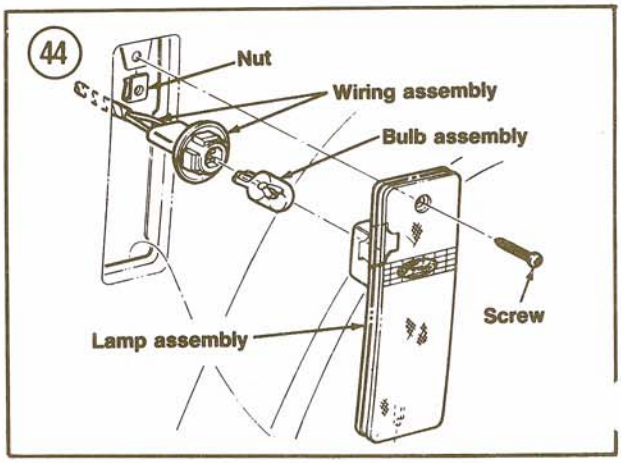

License Plate Lamp Replacement

Refer to **Figure 46** if equipped with a rear bumper or **Figure 47** if without a rear bumper.

1. Rotate socket 1/4 turn in either direction. Remove socket from lamp assembly.

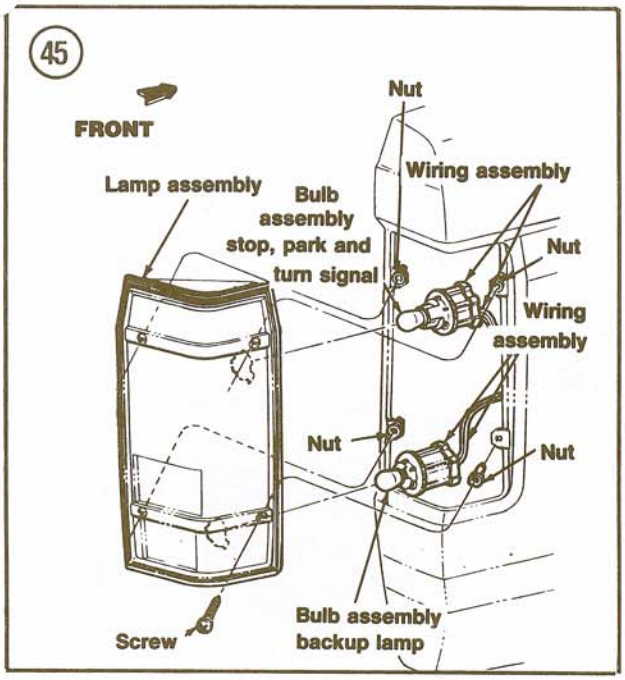

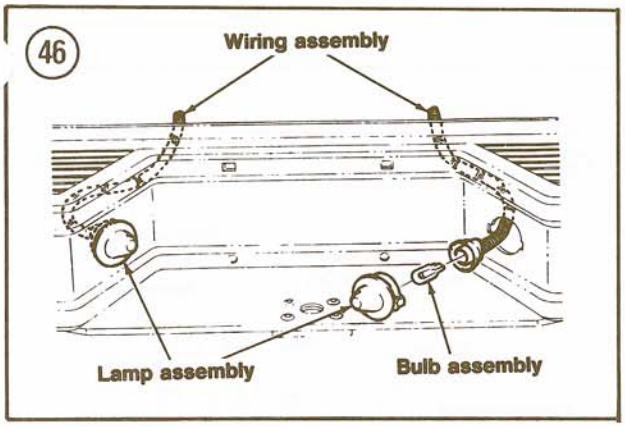

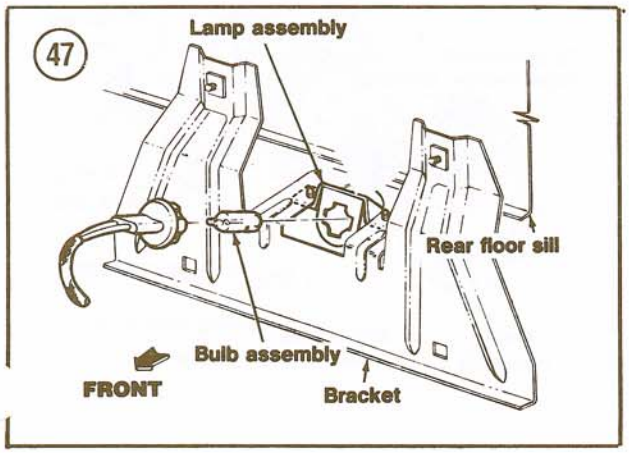

2. Pull bulb from socket.
3A. To remove the lamp assembly on bumper-equipped vehicles, pry it out with a small screwdriver.
3B. To remove the lamp assembly on vehicles without a bumper, reach behind the bracket and remove the 2 bolts holding it to the bracket.
4. Installation is the reverse of removal.

Instrument Light Replacement

Most cluster illumination and indicator bulbs can be removed by reaching up behind the instrument cluster and rotating the bulb and socket 1/4 turn counterclockwise. If the bulb cannot be reached in this manner, remove the instrument cluster as described in this chapter.

Cargo Lamp Replacement

The cargo lamp is removed in the same manner as the front parking lamps.

Dome Lamp Replacement

Refer to **Figure 48** for this procedure.
1. Grasp the dome lamp lens and squeeze it as you pull downward.
2. Remove the bulb from the terminal clips.
3. If the lamp housing is to be removed, remove the 2 retaining screws. Disconnect the wiring harness from the housing and remove the housing.
4. Installation is the reverse of removal.

IGNITION SWITCH

A blade-type terminal switch with one multiple connector is used. The switch is attached to the steering column with 2 shear bolts.

Removal

1. Rotate the lock cylinder key to the LOCK position.
2. Disconnect the negative battery cable on gasoline models. Disconnect both negative battery cables on diesel models.
3. If equipped with a tilt column, squeeze the upper extension shroud at the top and bottom to pop it free from the retaining plate. Remove the shroud.
4. Remove the screws holding the 2 trim shroud halves.

5. Disconnect the ignition switch connector. See **Figure 49**.
6. Drill out the 2 shear bolts, holding the switch in place with a 1/8 in. drill bit.
7. Use an Ex-3 "Easy-out" tool to remove the 2 bolts.
8. Disengage the ignition switch from the actuator pin and remove it from the steering column.

Installation

1. Rotate the ignition key to the RUN position (about 90° clockwise from the LOCK position).
2. Align the switch holes with those in the lock cylinder housing. It may be necessary to make a minor adjustment in the lock cylinder position to align the actuator pin with the U-slot in the switch carrier.
3. Install new shear bolts. Operate the ignition switch to check for proper operation in all modes. Tighten bolts until the head shears off.
4. Connect the wiring harness to the switch.
5. Connect the negative battery cable(s).
6. Install the steering column trim shrouds.

Testing

1. Perform Steps 1-5 of *Ignition Switch Removal* as described in this chapter.
2. Identify the switch terminals according to **Figure 50**.
3. Connect an ohmmeter or self-powered test lamp across the terminals in the sequence shown in **Figure 50**. Continuity should exist as indicated in **Figure 50**. If any switch position fails the continuity test, replace the switch.

HEADLIGHT SWITCH

The combination 3-position headlight switch is mounted in the lower left of the instrument panel. It controls circuits to the headlights, parking/marker and taillights, license plate, interior and instrument panel lights.

Some vehicles may be equipped with a buzzer system to warn the driver that the outside lights are on. The buzzer for this system is incorporated inside the seat belt warning buzzer installed behind the instrument panel on the right-hand side above the glove compartment. The system is activated whenever the driver's door is opened with the exterior lights on.

The switch must be removed for continuity testing.

Removal/Installation

Refer to **Figure 51** for this procedure.
1. Disconnect the negative battery cable on gasoline models. Disconnect both negative battery cables on diesel models.

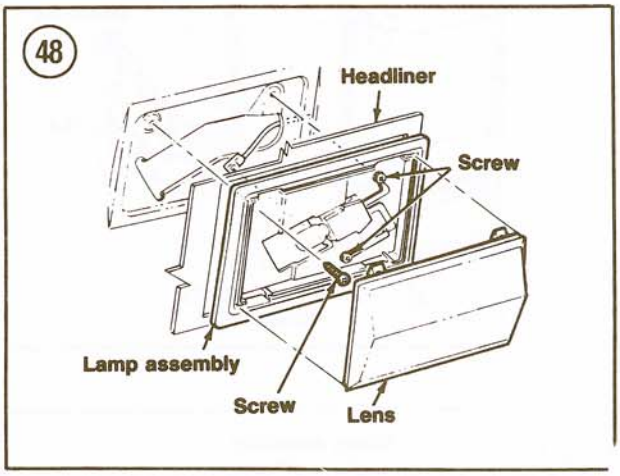

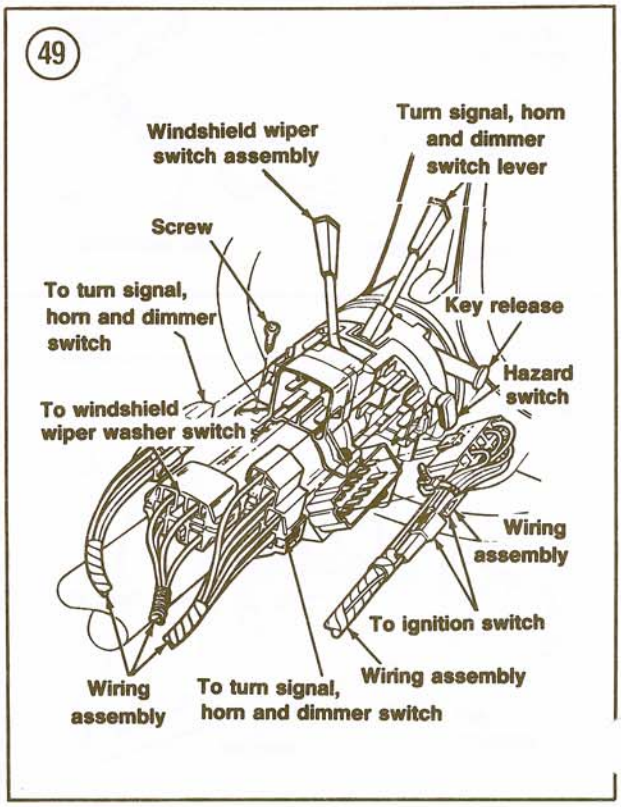

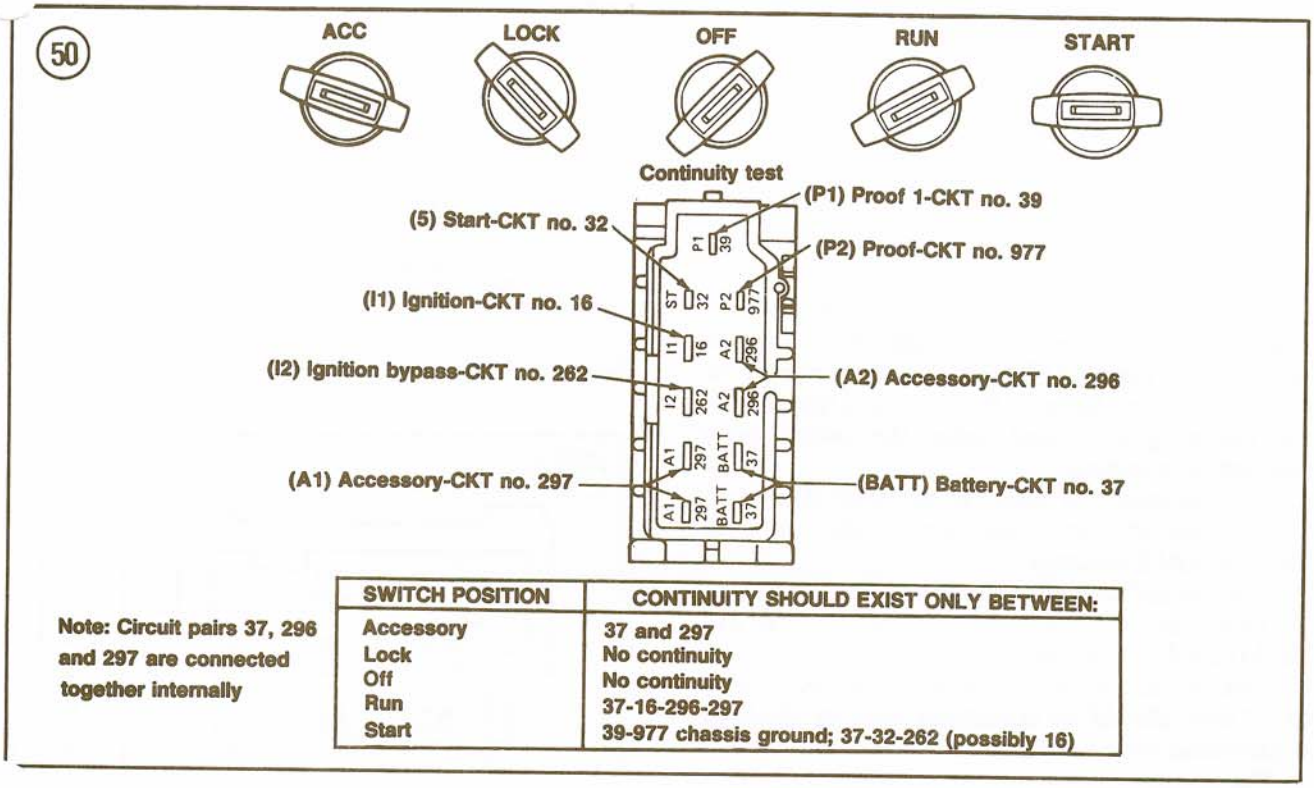

Note: Circuit pairs 37, 296 and 297 are connected together internally

SWITCH POSITION	CONTINUITY SHOULD EXIST ONLY BETWEEN:
Accessory	37 and 297
Lock	No continuity
Off	No continuity
Run	37-16-296-297
Start	39-977 chassis ground; 37-32-262 (possibly 16)

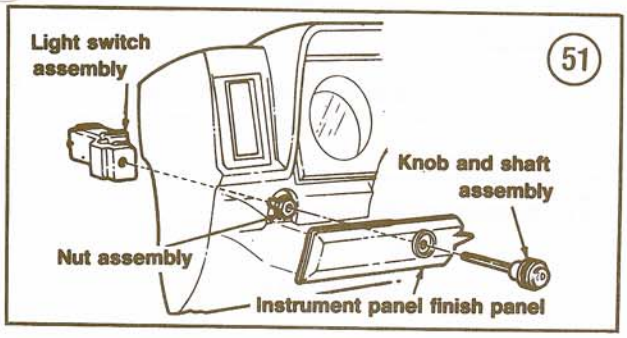

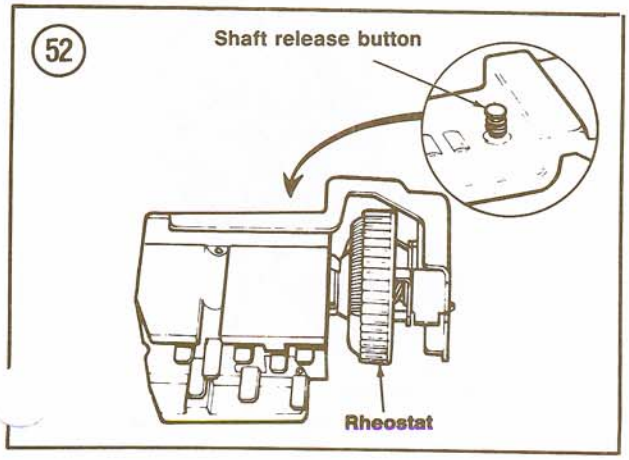

2. Pull the headlight switch knob out as far as it will go.
3. Reach under the instrument panel and depress the shaft release button on the switch. See **Figure 52.**
4. Remove the instrument panel finish panel.
5. Unscrew the mounting nut on the face of the instrument panel.
6. Disconnect the switch from its wiring connector. Remove the switch.
7. Installation is the reverse of removal.

Testing (1983-1986)

With the ignition switch removed, fit the knob/shaft assembly into the switch. Identify the terminals according to **Figure 53A.** Connect a ohmmeter or self-powered test lamp to the terminals specified in the following steps and move the switch knob through all positions.

1. Test the headlight circuit at terminals B and H. There should be continuity only in the HEADLIGHT position.
2. Test the parking light circuit at terminals A and R. There should be continuity in both PARK and HEADLIGHT positions.

8

3. Test the dome light circuit at terminals D1 and D2. There should be continuity only in the fully counterclockwise position.
4. Test the panel light dimmer circuit at terminals R and I with an ohmmeter. The ohmmeter should show increasing resistance from 420-880 to 7,000-13,000 ohms.
5. Replace the switch if it fails to perform as indicated in any test step.

With the switch removed, fit the knob/shaft assembly to the switch. Identify the terminals according to **Figure 53B**. Connect an ohmmeter or self-powered test lamp to the terminals specified in the following steps and move the switch knob through all positions.

1. Test the headlight circuit at terminals B1 and H. There should be continuity only in the HEADLIGHT position.
2. Test the parking light circuit at terminals B2 and R. There should be continuity in both PARK and HEADLIGHT positions.
3. Test the dome light circuit at terminals D1 and D2. There should be continuity only in the fully counterclockwise position.
4. Test the panel light dimmer circuit at terminals R and I with an ohmmeter. The meter should show gradually increasing resistance as the knob is rotated clockwise.

NOTE

Steps 5-8 must be performed at the switch connector with the ignition key in the ON

5. Test the circuit between terminal B1 and ground. If there is no continuity, look for a problem in the switch wiring between the connector and fusible link.
6. Repeat Step 5 to check terminal B1 and ground.
7. Test the liquid crystal display lamp circuit at terminals B2 and IGN of the connector by inserting a jumper wire in the 2 terminal receptacles. Only the liquid crystal display lamps in the instrument panel should light.
8. Repeat Step 7 between terminals B2 and I to check the remaining instrument panel lights. The liquid crystal lamps should not light.
9. Replace the switch if it fails to perform as indicated in Steps 1-4. Repair the wiring harness as required if it fails in Step 5-8.

WINDSHIELD WIPER SWITCH

All vehicles are equipped with a 2-speed wiper system. A 2-speed wiper system with interval

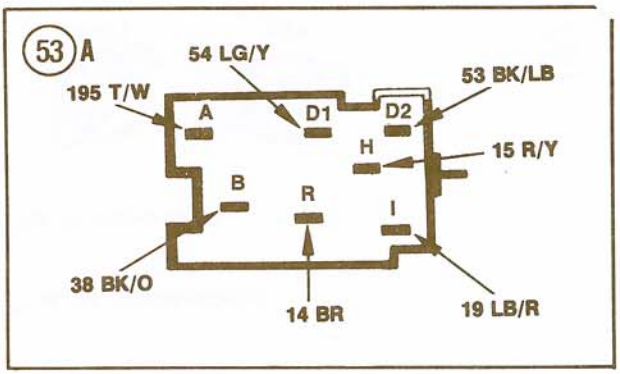

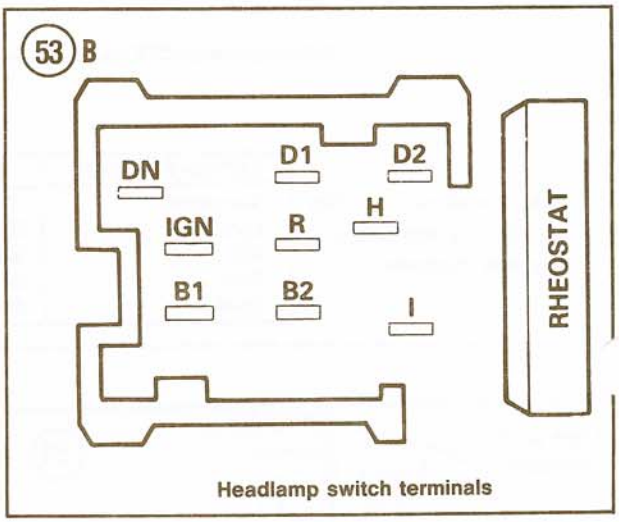

Headlamp switch terminals

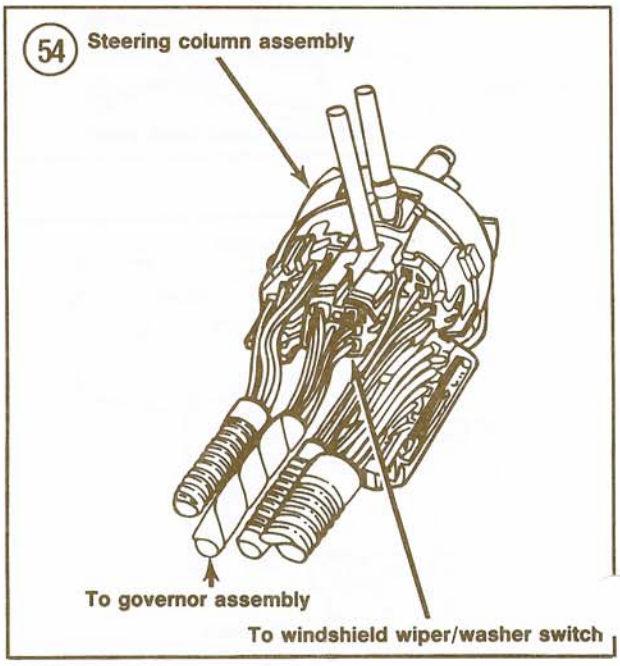

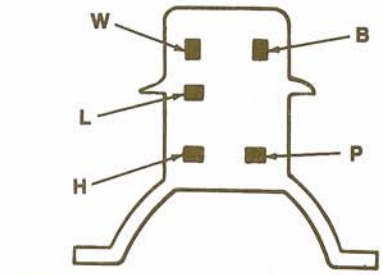

STANDARD

SWITCH POSITION	CONTINUITY BETWEEN TERMINALS
OFF	P–L
LOW	B+L
HIGH	B+H
WASH	B+W

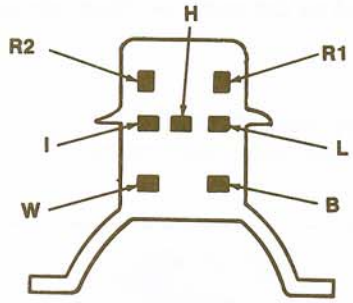

INTERVAL

SWITCH POSITION	CONTINUITY BETWEEN TERMINALS
OFF	–
LOW	B+L
HIGH	B+H–L
INTERVAL	B+I
	Variable resistance between R1 and R2 min. 420, max. 13,000
WASH	B+W

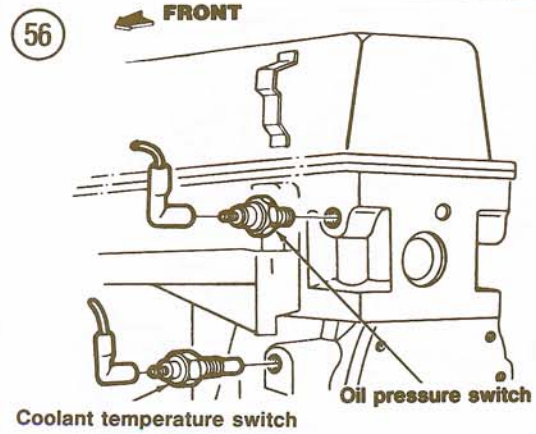

control is optional. The switch is mounted on the steering column near the ignition switch and can be tested without removal.

Continuity Test

1. Disconnect the negative battery cable on gasoline models. Disconnect both negative battery cables on diesel models.
2. If equipped with a tilt column, squeeze the upper extension shroud at the top and bottom to pop it free from the retaining plate. Remove the shroud.
3. Remove the 2 screws holding the trim shroud halves. Remove the trim shroud halves.
4. Disconnect the wiper switch electrical connector (**Figure 54**).
5. Check the continuity between the switch terminals as shown in **Figure 55** with an ohmmeter. Move the switch lever while taking each reading.
6. If the switch does not show continuity as indicated in **Figure 55** or if there is poor continuity in any switch position, replace the switch.

Removal/Installation

1. Disconnect the negative battery cable on gasoline models. Disconnect both negative battery cables on diesel models.
2. If equipped with a tilt column, squeeze the upper extension shroud at the top and bottom to pop it free from the retaining plate. Remove the shroud.
3. Remove the 2 screws holding the trim shroud halves. Remove the trim shroud halves.
4. Disconnect the wiper switch electrical connector (**Figure 54**).
5. Peel the foam sight shield back. Remove the 2 hex head screws holding the switch to the column. Remove the switch.
6. Installation is the reverse of removal.

COOLANT TEMPERATURE SWITCH

Vehicles equipped with a standard instrument cluster use a temperature warning lamp in the instrument panel. Those equipped with the optional gauge cluster have a temperature gauge. Both types are controlled by a thermal switch which senses engine coolant temperature.

The switch is mounted in the engine block of 4-cylinder gasoline-powered models (**Figure 56**)

and the thermostat housing (water outlet) on V6 models (**Figure 57**). The coolant temperature switch on diesel engines is installed in the right-hand side of the thermostat case.

Testing

Lamp does not go on, engine not overheated

1. Disconnect the water temperature switch wire and ground it to the engine block with a jumper lead.
2. Turn the ignition switch to RUN. If the lamp does not light, check for an open circuit in the wire between the ignition switch and temperature switch. Repair or replace as required.
3. If the lamp lights in Step 2, check for an open circuit in the wire from the indicator lamp to the ignition switch. Repair or replace as required.

Lamp does not go out, engine not overheated

1. Turn the ignition switch to RUN.
2. Disconnect the water temperature switch wire. If the lamp goes out, replace the switch.
3. If the lamp remains on in Step 2, check for a short in the wire between the water temperature and ignition switches. Repair or replace as required.

Replacement

NOTE

Remove the radiator cap to relieve any pressure when installing a new water temperature switch.

1. Drain about 2 quarts of coolant from the cooling system. See Chapter Six.
2. Disconnect the negative battery cable(s).
3. Disconnect the electrical lead at the water temperature switch.
4. Remove the temperature switch from the cylinder head (4-cylinder gasoline) or thermostat housing (V6 and diesel).
5. Coat the threads of a new temperature switch with an electrically conductive sealer.
6. Install and tighten the new switch to 8-18 ft.-lb. (11-24 N•m).
7. Reconnect the switch lead and the negative battery cable(s).
8. Refill the cooling system to the proper level. See Chapter Six.
9. Start the engine. Check the switch operation. Check for leaks.

OIL PRESSURE SWITCH/SENDING UNIT

A 3-terminal switch is used on vehicles with an oil pressure indicator light. The center terminal controls the oil pressure light; the outer terminals control the choke operation. See **Figure 56** (4-cylinder) or **Figure 58** (V6) for typical location.

Vehicles equipped with an oil pressure gauge use a variable resistance sender. See **Figure 59** (4-cylinder) or **Figure 58** (V6) for typical location.

Diesel vehicles use a remote oil pressure sending unit bracket-mounted to the frame rail and connected to the main oil filter adapter.

Testing

The oil pressure sending unit fitted to all diesel vehicles and those gasoline-powered vehicles with

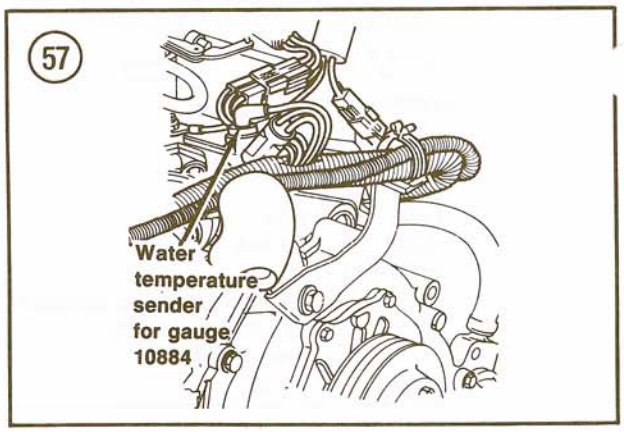

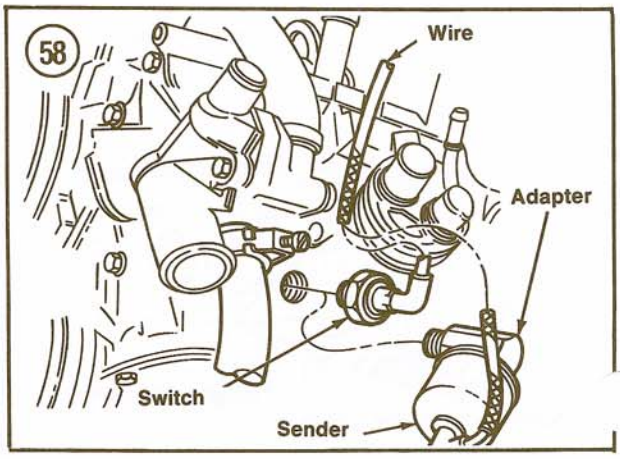

An oil pressure gauge requires special equipment not commonly available to the home mechanic. Have the sending unit (diesel) or variable resistance sender (gasoline) tested by a Ford dealer.

To test the switch used on non-diesel vehicles with an indicator light, turn the ignition switch ON but do not start the engine. The indicator light should come on. If it does not, disconnect the wire at the switch terminal and ground it with a jumper lead. If the indicator light comes on, replace the switch. If the light does not come on, check for a burned-out indicator bulb or an open circuit between the bulb and switch.

INSTRUMENTS

Current is supplied to the instrument cluster gauges and lamps by a printed circuit. This is made of copper foil bonded to a polyester base such as Mylar. There is no approved procedure for in-vehicle testing of the printed circuit. Using a probe may pierce the printed circuit or burn the copper conductor. If no damage seems apparent, check each circuit with a test light or ohmmeter. If an open or short circuit is found, replace the printed circuit board.

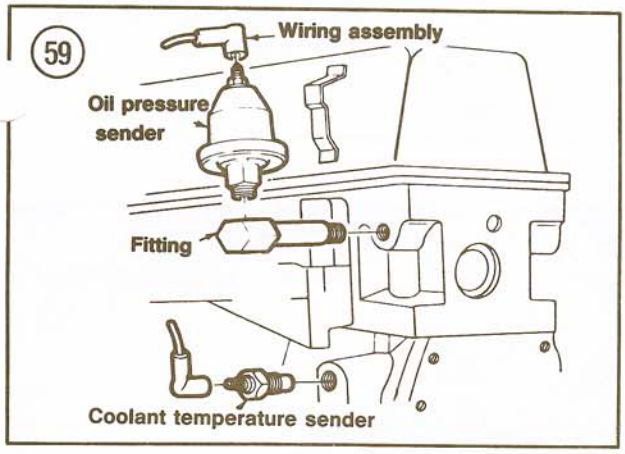

Instrument Cluster Removal/Installation

1. Disconnect the negative battery cable on gasoline models. Disconnect both negative battery cables on diesel models.
2. If equipped with a tilt column, squeeze the upper extension shroud at the top and bottom to pop it free from the retaining plate. Remove the shroud.
3. Remove the 2 screws holding the steering column shroud to the instrument panel. Remove the shroud.
4. Carefully pry the lower instrument panel trim free. No screws are used to secure this panel.
5. Remove 8 screws holding the cluster trim cover to the instrument panel.
6. Remove 4 screws holding the cluster to the panel (**Figure 60**).
7. Pull the cluster away from the panel enough to disconnect the speedometer cable.
8. Disconnect the electrical connector from the printed circuit. Remove the cluster from the instrument panel.
9. Installation is the reverse of removal. Apply a 3/16 in. diameter ball of silicone dielectric compound or equivalent to the drive hole of the speedometer head before reattaching the cable.

HORN

A single electric horn is standard on all models. Dual electric horns are optional. Horns are mounted on the fender apron in the engine

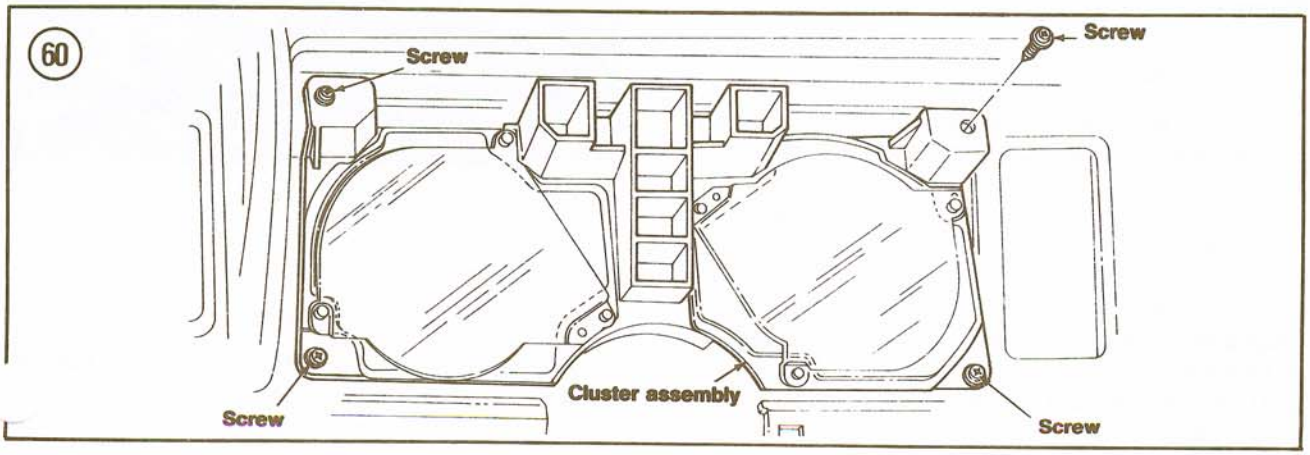

compartment next to the radiator support (**Figure 61**).

Testing

The horn mounting bolt provides a ground for the horn circuit. Refer to **Figure 62** for this procedure.

1. Make sure the mounting bolt is free of corrosion and tight. If loose, tighten to 7.5-9.0 ft.-lb. (10-12 N•m).
2. Connect a jumper lead between the mounting bolt and negative battery post.
3. Connect a second jumper lead between the horn terminal and the positive battery post.
4. If the horn does not sound and there are no sparks at the battery post in Step 3, disconnect the jumper leads and turn the horn adjustment screw 1/4-3/8 turn counterclockwise. Crimp the housing extrusions around the screw to hold it in place.
5. Reconnect the jumper leads as in Step 2 and Step 3. If the horn does not sound, replace it.

Replacement

Refer to **Figure 61** for this procedure.

1. Disconnect the horn wire from the horn terminal.
2. Remove the horn bracket mounting screw and washer.
3. Remove the horn and bracket from the engine compartment.
4. Installation is the reverse of removal.

WINDSHIELD WIPER/WASHER

All vehicles use a 2-speed permanent magnet, rotary type wiper motor (**Figure 63**). The washer reservoir contains an integral pump and is connected to the washer jets by a rubber hose. See **Figure 64** (typical).

Wiper Troubleshooting

1. If the wipers do not work, replace the 6-amp circuit breaker in the fuse panel with one known to be good.
2. If the wipers still do not work with a known-good circuit breaker, connect a jumper lead between the wiper motor housing and the vehicle body to check for ground. Ground is supplied by a ground strap and attaching screws. Clean or tighten as necessary.
3. If the wipers still do not work, check wiper switch continuity as described in this chapter.

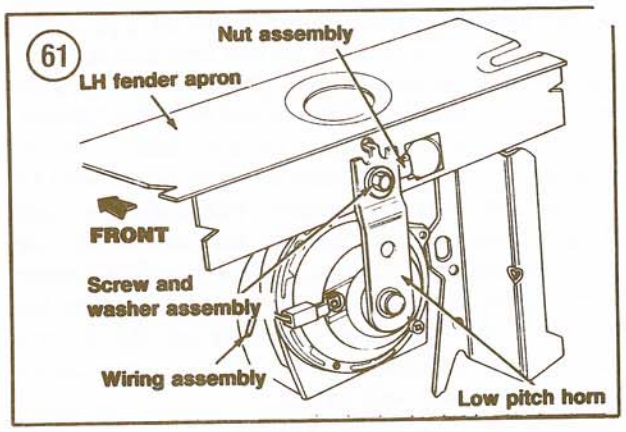

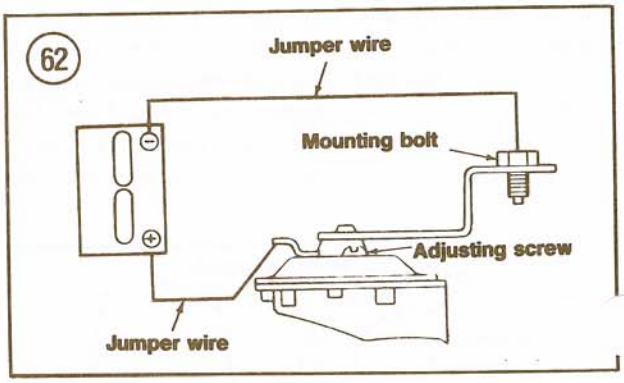

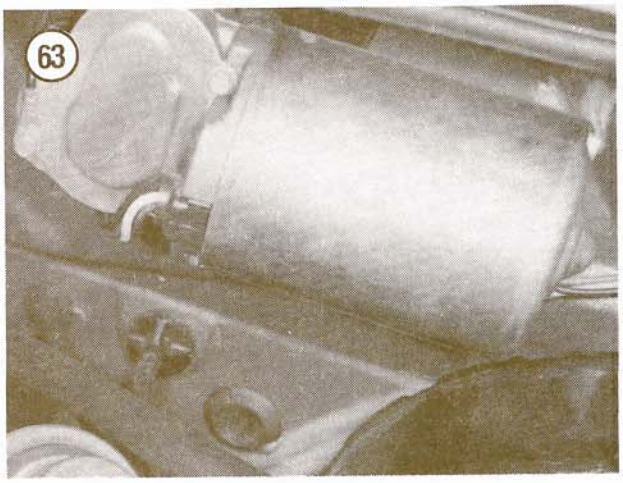

4. If switch continuity is good, test the wiper motor current draw.

Wiper Motor Current Draw

1. Disconnect the negative battery cable on gasoline models. Disconnect both negative batt cables on diesel models.

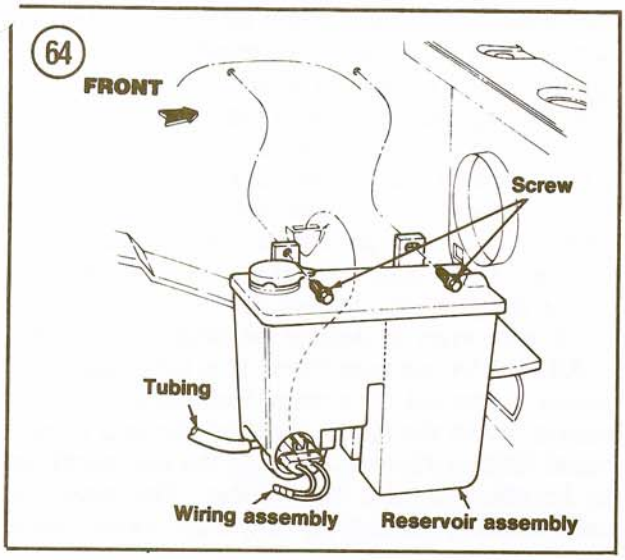

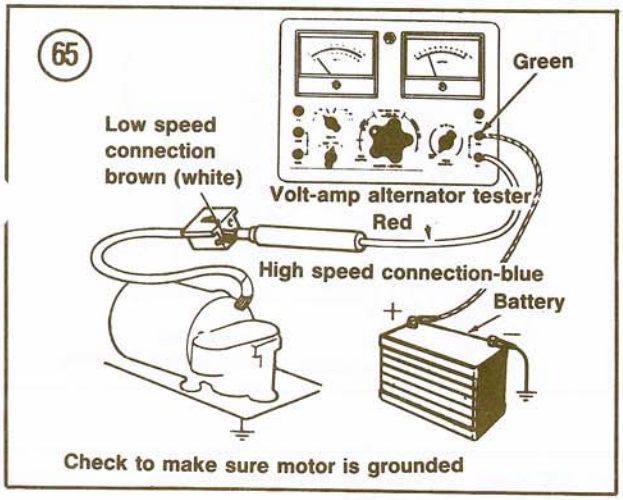

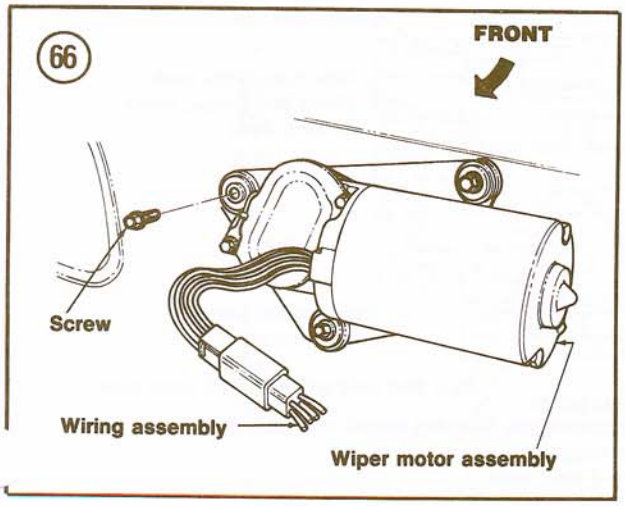

2. Disconnect the wiper linkage at the motor.
3. Disconnect the wiper electrical connector plug.
4. Connect a volt-amp-alternator tester to the positive battery terminal as shown in **Figure 65**. Alternately probe the low- and high-speed connections in the plug with the red test lead. If the current draw exceeds 2.5 volts at either connection, replace the motor.

Wiper Motor Replacement

1. Turn the wiper switch ON.
2. Turn the ignition switch ON. As the wiper blades move to a straight-up position, turn the ignition switch OFF.
3. Remove the right-hand wiper arm and blade assembly.
4. Disconnect the negative battery cable on gasoline models. Disconnect both negative battery cables on diesel models.
5. Remove the right-hand pivot nut. Let the linkage drop into the cowl.
6. Remove the linkage access cover, reach through the access opening and unsnap the wiper motor clip. Push the clip away from the linkage until it clears the crank pin nib. Push the clip off the linkage.
7. Remove the wiper linkage from the motor crank pin.
8. Unplug the electrical connector at the wiper motor.
9. Remove the attaching screws (**Figure 66**). Remove the motor.
10. Installation is the reverse of removal. Tighten the attaching screws to 60-65 in.-lb. (6.7-7.3 N•m).

Washer Reservoir Replacement

Figure 64 shows a typical washer reservoir. To remove, disconnect the fluid hoses. Disconnect the lock-tab wire connector. Remove the retaining screws and lift the assembly from the engine compartment. Installation is the reverse of removal.

Washer Motor, Seal and Impeller Removal/Installation

Refer to **Figure 67** for this procedure.
1. Remove the washer reservoir as described in this chapter.
2. Pry the retaining ring out with a small screwdriver.

3. Pull the motor, seal and impeller assembly out with a pair of pliers.

NOTE

If the impeller and seal come off when the motor is removed, they can be reassembled.

4. Lubricate the outside diameter of the seal with powdered graphite at the point shown in **Figure 67**.
5. Align the small projection on the motor assembly with the reservoir slot.
6. Press the assembly into the reservoir slot by hand until the seal seats against the motor cavity.
7. Hand press the retaining ring in place with a 12-point 1-inch socket.
8. Install the washer reservoir as described in this chapter.

ELECTRICAL CIRCUIT PROTECTION

Electrical circuits are protected by fuses, circuit breakers and fusible links.

Fuses

A fuse is a "safety valve" installed in an electrical circuit which "blows" (opens the circuit) when excessive current flows through the circuit. This protects the circuit and electrical components such as the alternator from damage.

The fuse panel is located on the firewall under the instrument panel and to the left of the steering column. It is reached by removing an access panel under the steering column. To gain access to the fuse panel, rotate the 3 nylon fasteners holding the access panel and remove the panel.

Fuse and circuit breaker identification for gasoline engines is shown in **Figure 68**. The power lumbar seat (1984-on) uses an additional 30-amp circuit breaker. A 10-amp diesel control module fuse is added for diesel models, which have additional circuit protection for the glow plug system. A 4.5-amp circuit breaker is installed above the glovebox (under the instrument panel) for liftgate wiper protection on Bronco II models.

All vehicles use mini-fuses. This flat design has 2 blades connected by a metal link encapsulated in plastic. When the fuse is installed, the end of each metal blade is exposed, allowing the fuse condition to be checked with test probes. The plastic is color-coded according to amperage value. Some

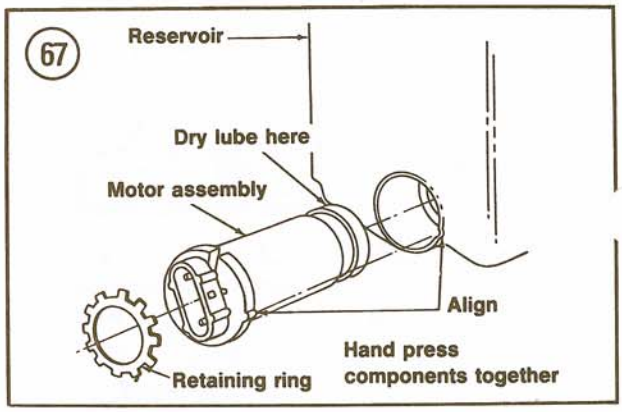

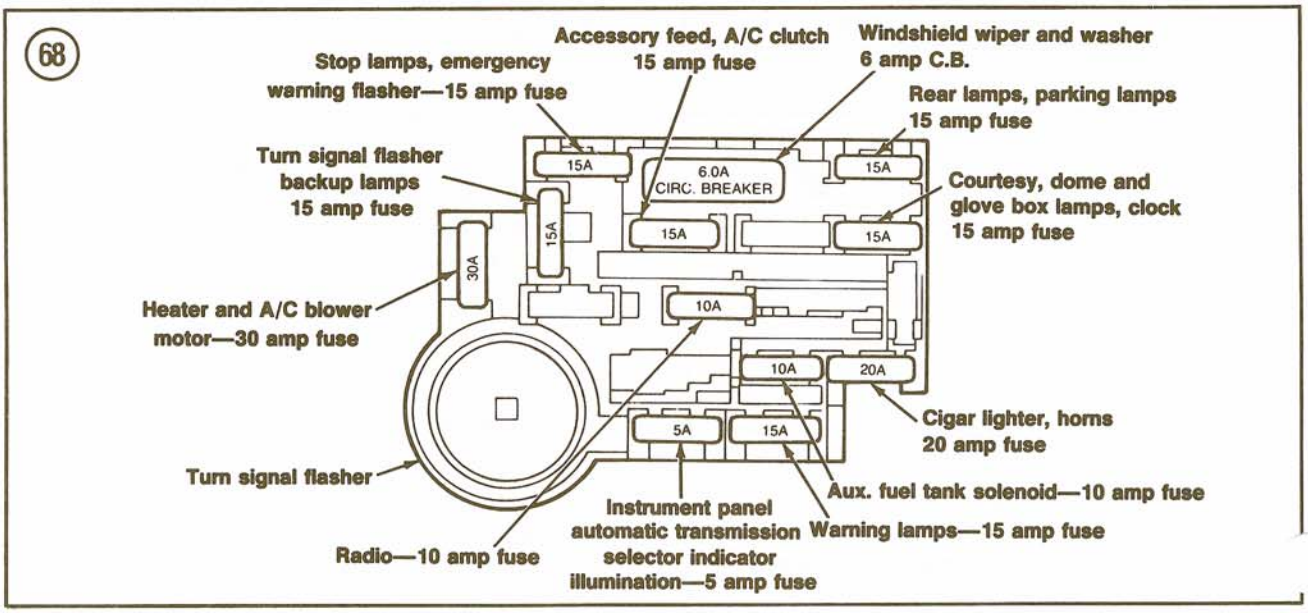

colors make it difficult to determine whether the fuse is good or bad. **Figure 69** shows the difference between a good and a blown mini-fuse.

Whenver a failure occurs in any part of the electrical system, always check the fuse first to see if it is blown. Usually, the trouble is a short circuit in the wiring. This may be caused by worn-through insulation or by a wire that has worked its way loose and shorted to ground. Occasionally, the electrical overload which causes a fuse to blow may occur in a switch or motor.

A blown fuse should be treated as more than a minor annoyance; it should serve as a warning that something is wrong in the electrical system. Before replacing a fuse, determine what caused it to blow and correct the problem. Always carry several spare fuses of the proper amperage values in the glovebox. Never replace a fuse with one of higher amperage rating than that specified for use. Failure to follow these basic rules could result in heat or fire damage to major parts or loss of the entire vehicle.

Fuse Replacement

To replace a mini-fuse, grasp the plastic covered top and pull the fuse from the fuse panel. Insert a new one of the same amperage value (color) in its place.

Circuit Breakers

Some circuits are protected by circuit breakers. These may be mounted in the fuse panel, installed in the circuit itself or located within the switch assembly. A circuit breaker conducts current through an arm made of 2 diffrent types of metal connected together. If too much current passes through this bimetal arm, it heats up and expands. One metal expands faster than the other, causing the arm to move and open the contacts to break the current flow. As the arm cools down, the metal contracts and the arm closes the contacts, allowing current to pass. Cycling inline circuit breakers will repeat this sequence as long as power is applied or until the condition is corrected. Non-cycling circuit breakers use a coil around the bimetal arm to hold it in an open position until power is shut off or the condition is corrected.

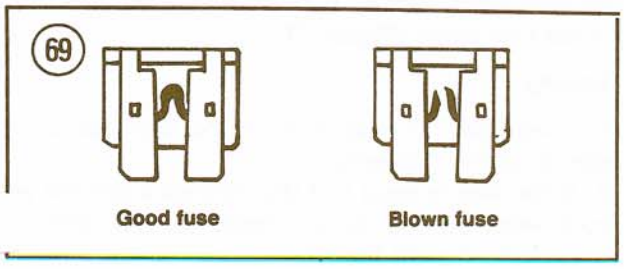

Fusible Links

Fusible links are different than fuses. A fusible link is a short length of wire several gauges smaller than the circuit it protects. It is covered with a thick non-flammable insulation and is intended to burn out if an overload occurs, thus protecting the wiring harness and circuit components. Production fusible links can be identified by a molded flag on the link.

Fusible links on gasoline models are located at the starter relay and near the electronic voltage regulator and/or electric choke. On diesel models, they are found at the starter motor and voltage regulator.

WARNING

Always replace a burned fusible link with a replacement bearing the same color code or wire gauge. Never use ordinary wire, as it can cause an overload or electrical fire, resulting in complete lose of the vehicle.

Burned-out fusible links can usually be detected by melted or burned insulation. When the link appears to be good but the headlights or an accessory in a circuit protected by a fusible link do not work, check the link for continuity with an ohmmeter or self-powered test lamp.

Fusible Link Replacement

Factory-installed fusible links are color-coded according to the link rating and have a molded flag at one end for easy location. Service or replacement links are either black or green depending upon usage. Refer to **Figure 70** for this procedure.

1. Obtain the proper service fusible link. Make sure the replacement link is a duplicate of the one removed in terms of wire gauge, length and insulation. Do not substitute any other type or gauge or wire.
2. Disconnect the negative battery cable(s).

8

3. Disconnect the fusible link and/or eyelet terminal.

NOTE

Production fusible links have an eyelet terminal for a 5/16 in. stud on one end. When the terminal is not required, cut the fusible link off as close to it as possible, then strip 1/8 in. of insulation from the cut end.

4. Cut the fusible link and the splice(s) from the wire(s) to which it will be connected.
5. Disconnect the feed part of the wiring and cut out the damaged portion as close as possible behind the splice in the harness.

NOTE

If the damaged fusible link is between 2 splices (weld point in the harness), cut out the damaged portion as close as possible to the weld points.

6. Splice and solder the new link to the wire(s) from which the old link was cut. Use rosin core solder. Wrap the splice(s) with vinyl tape.
7. Connect the eyelet of the link (if any) to the terminal stud from which the old link was removed.
8. Install the repaired wiring as before, using existing clips if provided.
9. Reconnect the negative battery cable(s).

TURN SIGNALS

The turn signal flasher is located in the fuse panel.

Testing

1. *One side flashes later than the other or only one side operates*—Check for a burned-out bulb. Clean socket of any corrosion. Check for a badly grounded bulb. Check for breaks in the wiring.
2. *Turn signals do not work at all*—Check the 15-amp fuse in the fuse panel by operating the backup lights. If the fuse is good, check the wiring for a break or poor connection. If the wiring is good, install a new flasher unit.
3. *Lights flash slowly or stay on*—Make sure the battery is fully charged. Check the fuse in the fuse panel for a poor contact. Check for a break or poor connection in the wiring. If none of these problems are found, replace the flasher.

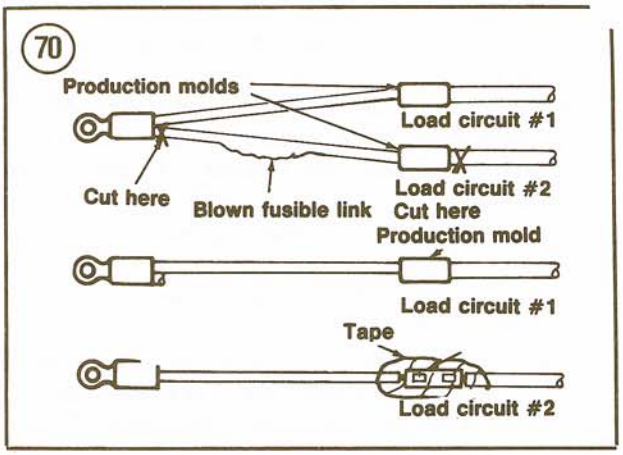

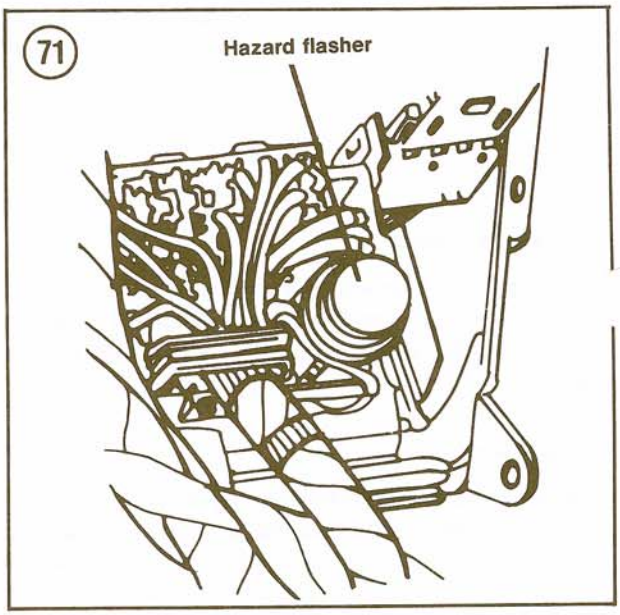

4. *Lights flash too quickly*—Check for a burned-out bulb or disconnected wire. If none are found, replace the flasher.

HAZARD FLASHER

The hazard flasher is identical in appearance to the turn signal flasher. It is located on the rear side of the fuse panel (**Figure 71**).

Testing

1. Check the 15-amp fuse in the fuse panel by operating the stoplights.
2. If the fuse is good and the stoplights operate on both sides but the hazard lights do not opera replace the hazard flasher.

Table 1 OPEN CIRCUIT VOLTAGE (STATE OF CHARGE)

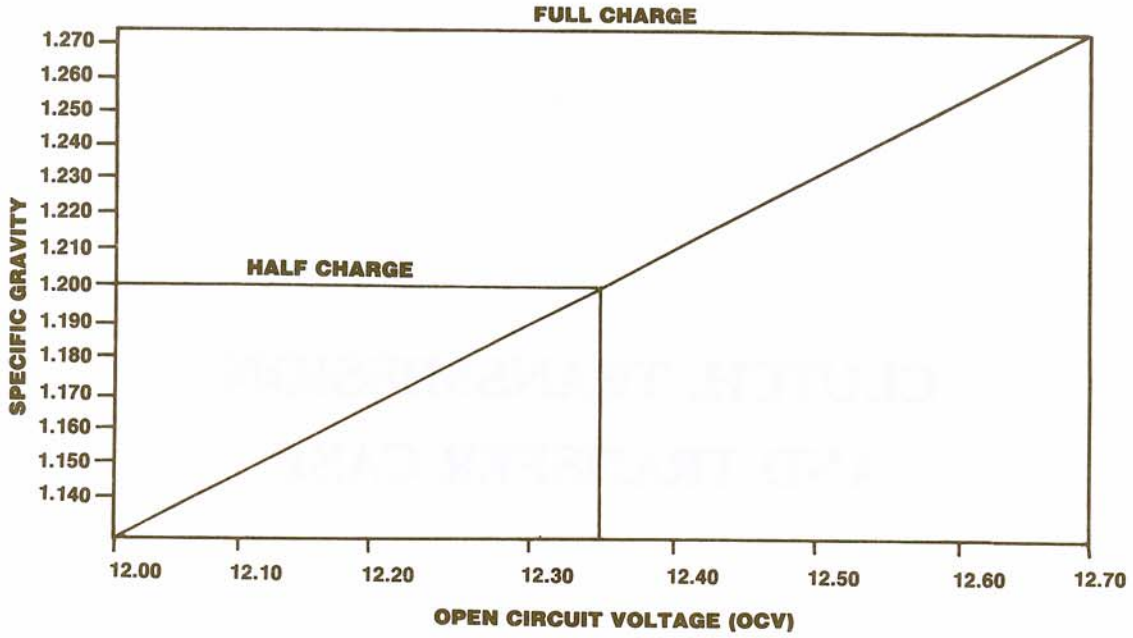

Table 2 STATE OF CHARGE PERCENTAGE (SPECIFIC GRAVITY)

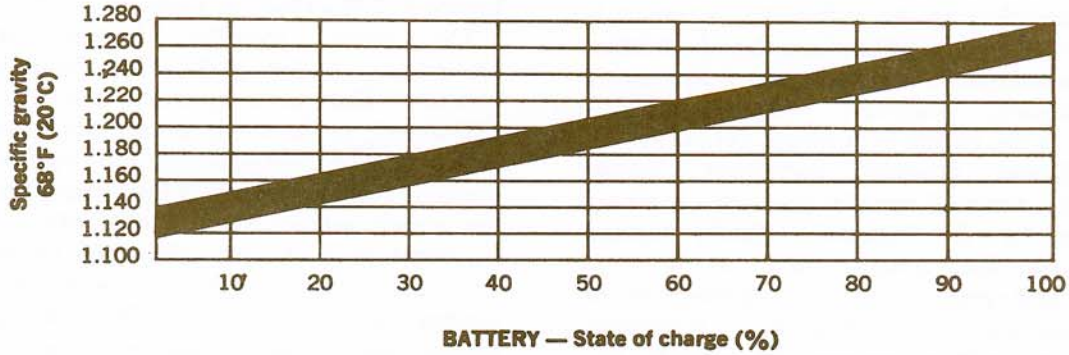

CHAPTER NINE

CLUTCH, TRANSMISSION AND TRANSFER CASE

All 1983-1984 2-wheel drive vehicles use a 4-speed manual transmission as standard equipment, with a 5-speed overdrive manual transmission optional. The 5-speed overdrive manual transmission is standard with 1985-on gasoline-powered and all 4-wheel drive vehicles. A 3-speed automatic or 4-speed automatic overdrive transmission is optional with gasoline engines.

Power is transmitted from the engine to the transmission, then to the differential where it is sent to the axle shafts which turn the wheel hubs. Manual transmissions are connected to the engine by the clutch; automatic transmissions are connected to the engine by a torque converter.

This chapter provides inspection, linkage adjustment, removal/installation and overhaul procedures for the hydraulic clutch, manual transmissions and transfer case, as well as inspection and removal/installation procedures for the automatic transmission. Automatic transmission overhaul requires special skills and tools and should be left to a dealer or other qualified shop. The inspection procedures will tell you if professional service is necessary.

Table 1 (tightening torques) is at the end of the chapter.

CLUTCH OPERATION

Major clutch components are the flywheel, clutch disc, clutch plate/cover assembly, clutch release lever and release bearing. See **Figure 1** (1983-1985) or **Figure 2** (1986).

The hydraulic clutch operating system consists of the pedal/bracket assembly, fluid reservoir, master cylinder, slave cylinder and connecting tubing. See **Figure 3** (1983-1985) or **Figure 4** (1986).

The master cylinder changes mechanical movement of the pedal into hydraulic fluid pressure. The slave cylinder mounted on the bellhousing (1983-1985) or on the transmission input shaft (1986) changes the hydraulic fluid pressure back to mechanical movement to operate the clutch release lever (1983-1985) or release bearing (1986). As the 1983-1985 clutch release lever pivots on its shaft, the inner end pushes against the release bearing. The bearing in turn pushes against the release lever in the clutch plate/cover assembly, releasing the clutch. On 1986 models, the slave cylinder operates the release bearing directly.

The hydraulic clutch system locates the clutc pedal and provides automatic clutch adjustment.

1

CLUTCH (1983-1985)

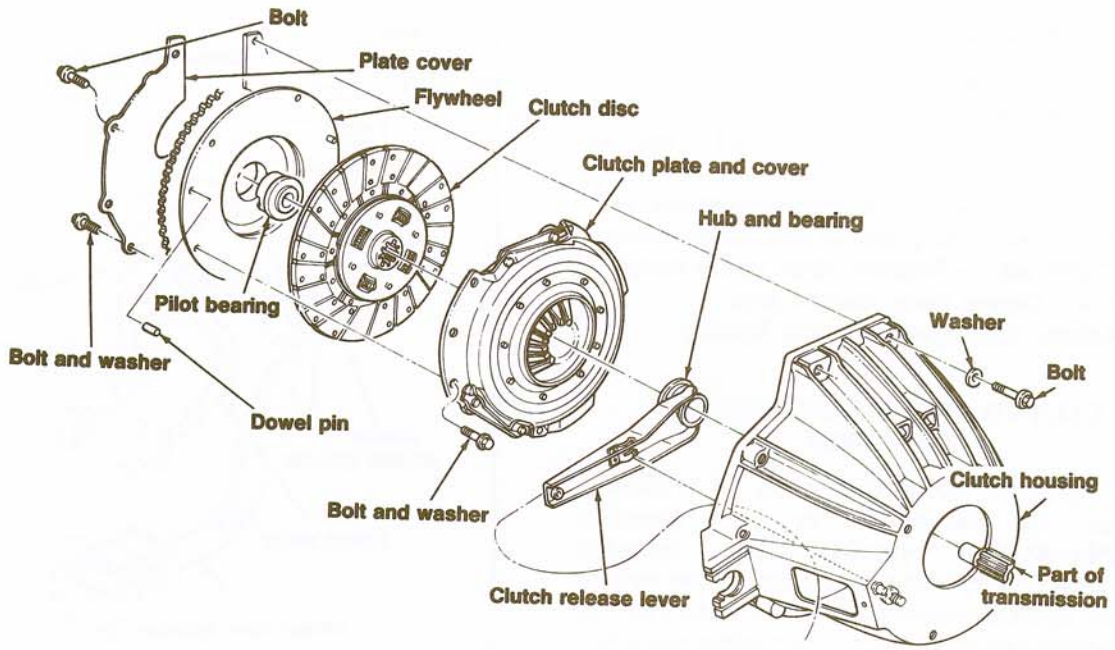

9

2

CLUTCH (1986)

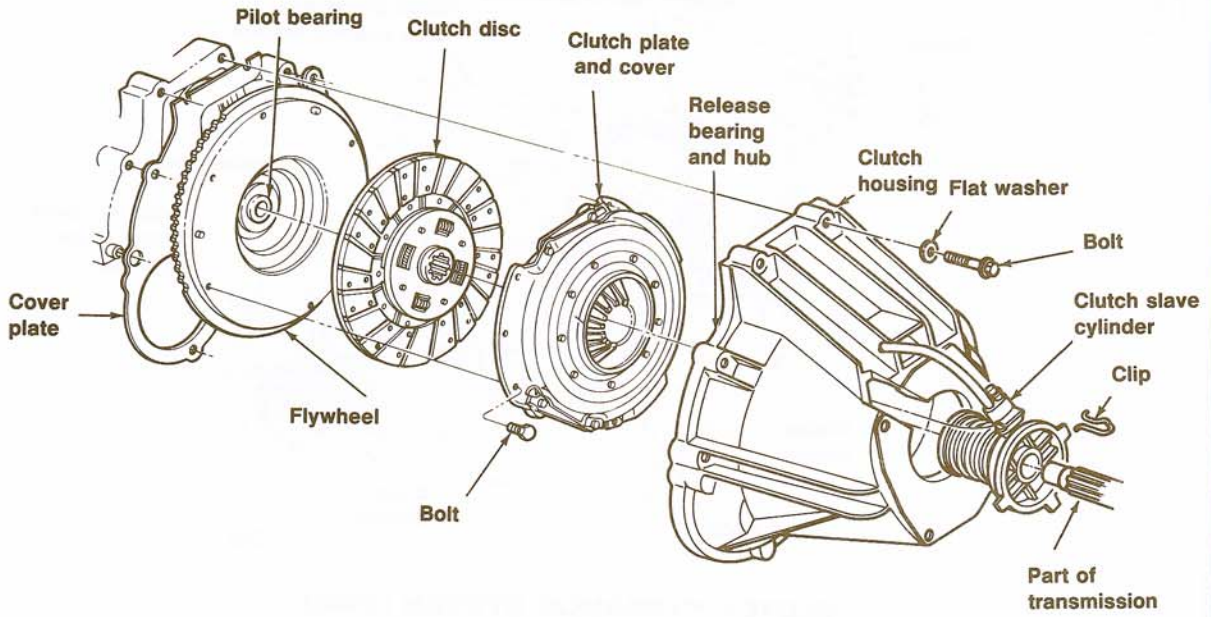

No routine service or adjustment of any kind is required or possible.

Parts Identification

Some clutch parts have 2 or more names. To prevent confusion, the following list gives part names used in this chapter and common synonyms.

a. Clutch fork—Release fork, throw-out arm, withdrawal lever, release arm, release lever.
b. Clutch plate—Pressure plate, clutch cover.
c. Disc—Driven plate, friction disc.
d. Release bearing—Throw-out bearing.

CLUTCH HYDRAULIC SYSTEM (1983-1985)

The hydraulic clutch system on all 1983-1985 vehicles is serviced as a complete assembly—master cylinder, slave cylinder, reservoir and interconnecting lines. If the system does not operate properly, the entire system should be removed and replaced as a complete assembly. Bleeding the system is not recommended by Ford and should not be attempted. The new assembly is furnished pre-filled with fluid and bled at the factory.

3 **CLUTCH HYDRAULIC SYSTEM (1983-1985)**

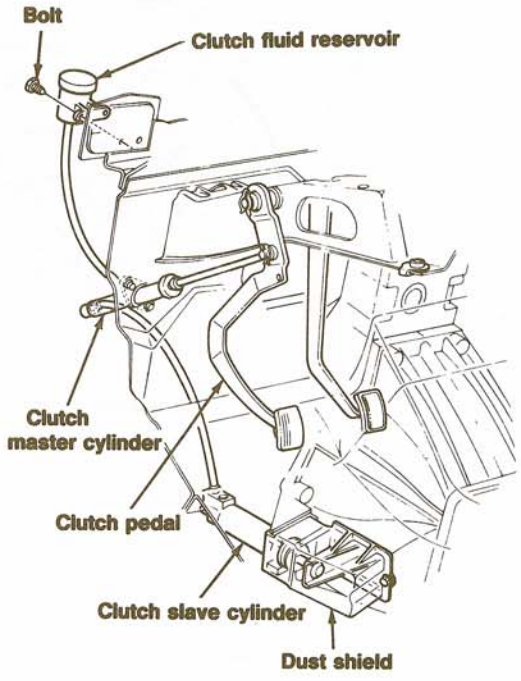

4

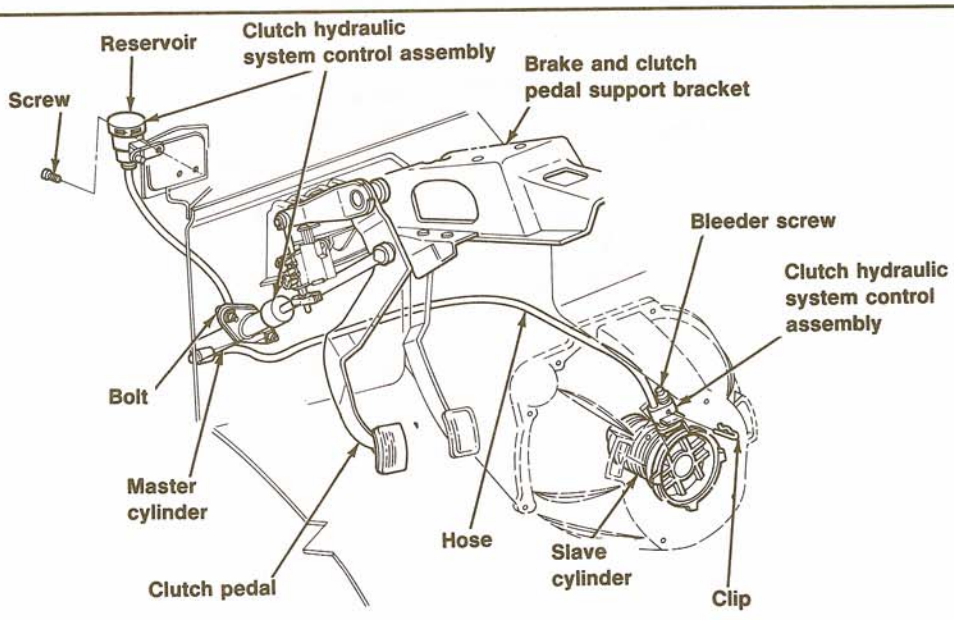

CLUTCH HYDRAULIC SYSTEM (1986)

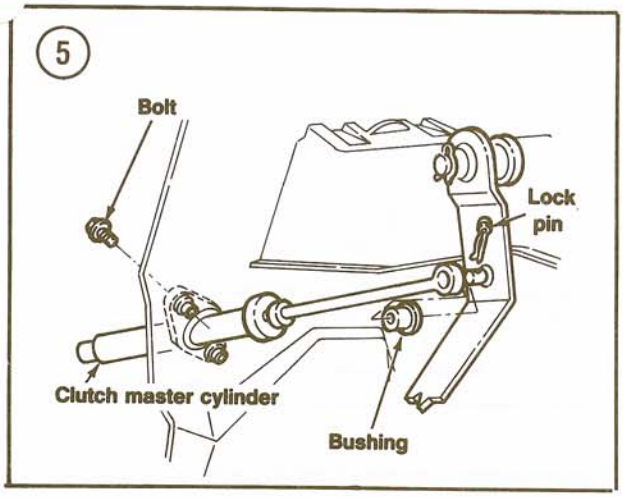

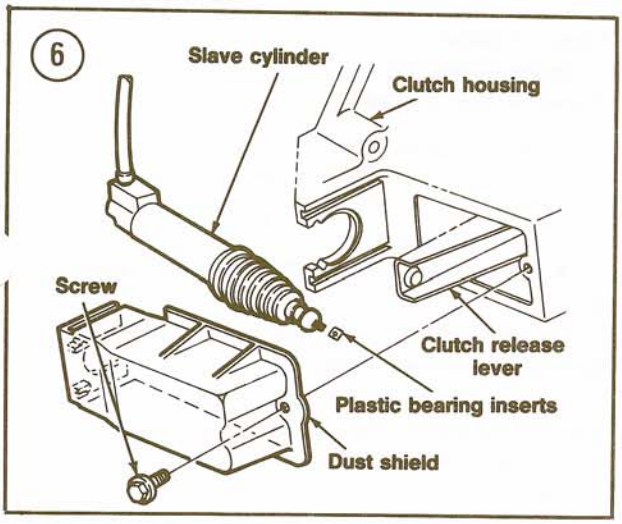

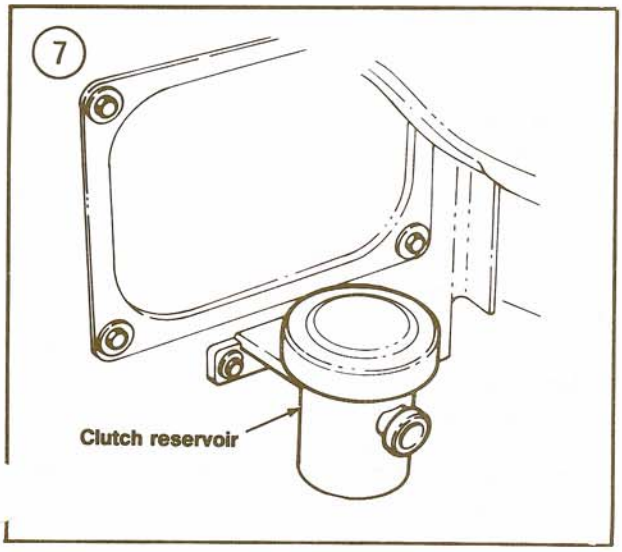

Slave Cylinder Pushrod Travel

If the hydraulic system is suspected of a malfunction, measure the slave cylinder travel before removing the entire system.

1. Raise the front of the vehicle with a jack and place it on jackstands.
2. Remove the screw holding the dust shield to the clutch housing (**Figure 3**).
3. Have an assistant fully depress and hold the clutch pedal while you measure the pushrod travel. The pushrod should extend at least 0.53 in. (13.5 mm) against the release lever. Replace the hydraulic system only if pushrod travel is less than the minimum specified.

System Removal

CAUTION

Before performing any service which requires removal of the slave cylinder pushrod from the release lever, the master cylinder pushrod must be removed from the clutch pedal. Depressing the clutch pedal with the slave cylinder removed will cause permanent damage to the slave cylinder.

1. Working inside the cab, remove the lockpin holding the clutch master cylinder pushrod to the clutch pedal. Disconnect the pushrod from the pedal. See **Figure 5**.
2. Securely block both rear wheels so the truck will not roll in either direction. Raise the front of the vehicle with a jack and place it on jackstands.
3. 4-cylinder—Remove the screw holding the dust shield to the clutch housing (**Figure 6**). Remove the dust shield.
4. Push the slave cylinder to the rear and disengage it from the recess in the housing lugs. Slide the slave cylinder outward, disengaging the pushrod at the release lever.

NOTE

Catch any plastic bearing inserts installed between the pushrod end and the release lever. Save for reuse if the old slave cylinder is to be reinstalled; discard when installing a new hydraulic system.

5. Remove the 2 bolts holding the clutch master cylinder to the firewall (**Figure 5**).
6. Remove the 2 bolts holding the fluid reservoir to the cowl access cover (**Figure 7**).

7. Pull the master cylinder assembly through the firewall into the engine compartment and remove the entire hydraulic system from the vehicle.

System Installation

1. Position the hydraulic system in the engine compartment and insert the master cylinder through the firewall opening. Install and tighten the attaching bolts to 15-20 ft.-lb. (21-27 N•m).
2. Route the slave-to-master cylinder hose above the brake lines, in front of the speedometer cable and under the steering column shaft on 4-cylinder vehicles. On V6 vehicles, the hose should rest on top of the clutch housing.
3. Attach the fluid reservoir to the cowl access cover and tighten bolts to 1.5-2.0 ft.-lb. (2.1-2.7 N•m).
4A. If the old slave cylinder is reinstalled, be sure to install the plastic bearing insert(s) between the pushrod and release lever.
4B. New slave cylinders have a shipping strap attached to pre-position the pushrod for installation. This strap also contains a plastic bearing insert. Install a new cylinder with the strap attached. Operating the clutch pedal when the system is installed will break the strap and provide normal system operation.
5. Insert the slave cylinder pushrod into the clutch release lever and slide the cylinder into the lugs on the clutch housing. Make sure the cylinder is fully seated in the recess in the lugs.
6. 4-cylinder—Snap the dust shield in place and install the attaching screw. Tighten screw to 5-10 ft.-lb. (7-13 N•m).
7. Lightly lubricate the master cylinder pushrod bushing with clean engine oil. Attach the bushing and pushrod to the clutch pedal and install the lockpin.
8. Check the fluid level in the reservoir and top up, if necessary. Do *not* fill above the step in the reservoir.
9. Depress and release the clutch pedal at least 10 times to make sure it operates smoothly and releases the clutch properly.

CLUTCH HYDRAULIC SYSTEM (1986)

The system is similar to that used on 1983-1985 vehicles, but the slave cylinder is installed on the transmission input shaft with the release bearing.

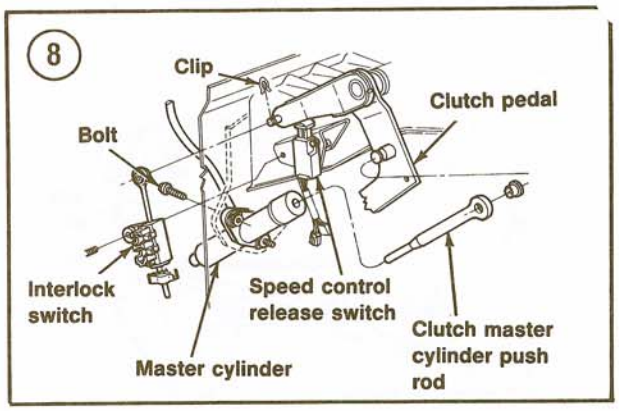

Components are serviceable individually and the system can be bled when required.

Clutch Master Cylinder/Reservoir Removal/Installation

Refer to **Figure 4** for this procedure.
1. Working inside the cab, pry the retainer bushing and clutch master cylinder pushrod off the clutch pedal. See **Figure 8**.
2. Remove the screw holding the fluid reservoir t the cowl access cover.
3. Unbolt and remove the master cylinder from the engine compartment.
4. Unclip the slave cylinder hydraulic hose at the clutch housing. Remove the hose and fitting with the master cylinder/reservoir. Cap both lines to prevent the entry of contamination.
5. Installation is the reverse of removal. Tighten master cylinder bolts to 15-20 ft.-lb. (21-27 N•m). Bleed the hydraulic system as described in this chapter.

Clutch Slave Cylinder Removal/Installation

1. Remove the transmission as described in this chapter.
2. Remove the nuts holding the clutch housing to the transmission. Remove the clutch housing. See **Figure 9**.
3. Remove the slave cylinder from the input shaft (**Figure 10**).
4. Installation is the reverse of removal. Position slave cylinder with its tower part facing the transmission and make sure it seats in the clutc housing notches. Bleed the hydraulic system described in this chapter.

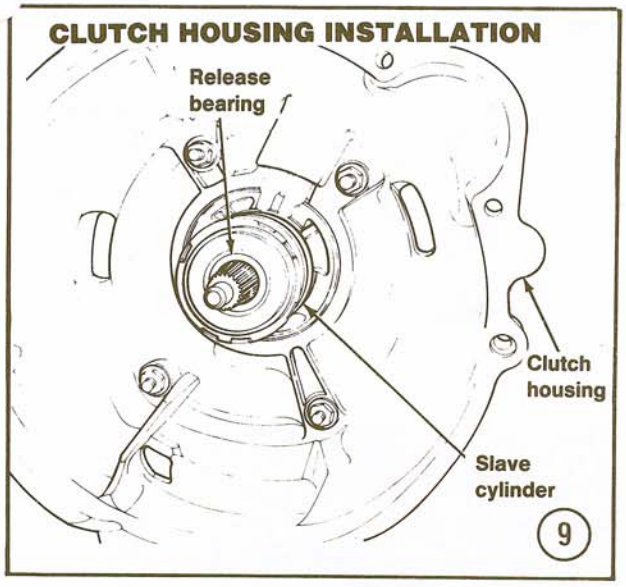

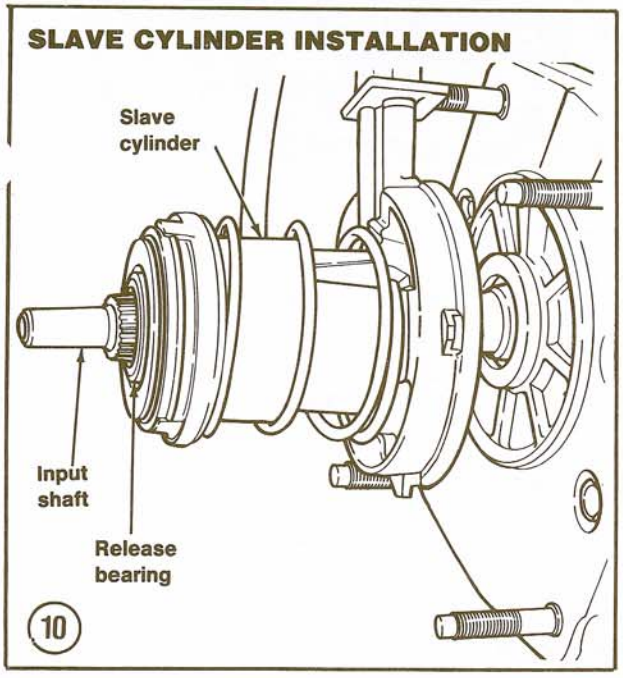

Bleeding the Hydraulic System

The factory-installed clutch hose has a quick-disconnect fitting. Ford recommends the hose be replaced when the hydraulic system requires service, as the quick-disconnect fitting can retain air and prevent correct bleeding of the system. A replacement hose does not have a quick-disconnect fitting. Refer to **Figure 4** for this procedure.

1. Clean all dirt and grease from the master cylinder reservoir and cap.
2. Remove the cap and diaphragm. Fill the reservoir to the top with DOT 3 brake fluid.
3. Raise the vehicle with a jack and place it on jackstands.
4. Loosen the bleed screw in the slave cylinder hydraulic control assembly. Gravity will carry fluid down the hose into the slave cylinder, expelling any air in the system. When a steady stream of fluid comes out of the bleed screw without air bubbles, tighten the screw.
5. Have an assistant depress and hold the clutch pedal for 1-2 seconds, the release it as quickly as possible. Repeat this step 10 times, pausing 1-2 seconds between pedal application.
6. Check the fluid level in the reservoir and top up, if necessary.
7. Repeat Step 5 and Step 6 five more times, then reinstall the reservoir diaphragm and cap.

NOTE

Crack, do not open, the bleed screw in Step 8. If opened too far, fluid will spray out.

8. Have the assistant depress and hold the pedal while you crack the screw to allow any additional air to escape. Tighten screw, then release the clutch pedal.
9. Repeat Step 6. Check clutch operation by starting the vehicle and shifting into reverse gear. The system has been properly bled if there is no gear clash. If there is, repeat Steps 5-8.

CLUTCH

Removal

1. Working in the cab, disconnect the clutch master cylinder pushrod from the clutch pedal.
2. 1986—Unbolt and remove the clutch master cylinder.
3. Raise the front of the vehicle with a jack and place it on jackstands.
4. 1983-1985—Disconnect the clutch slave cylinder pushrod from the release lever.
5. 1985—Unclip and disconnect the hydraulic hose at the slave cylinder.
6. Remove the starter motor. See Chapter Eight.
7. Remove the transmission and clutch housing as described in this chapter.

8. Make alignment marks on the clutch cover and flywheel for reassembly reference.

NOTE

Inexpensive aligning bars can also be used in Step 9 if a dummy shaft is not available. Some tool rental dealers and parts stores rent universal aligning bars which can be adapted.

9. Insert a dummy shaft made from an old input shaft through the clutch disc hub.
10. Unbolt the clutch cover from the flywheel. Loosen the bolts in several stages using a diagonal pattern to prevent warping the cover.
11. Remove the cover plate and disc from the flywheel (**Figure 11**).

Clutch Disc Inspection

Check the clutch disc for the following:

a. Oil or grease on the facings.
b. Glazed or warped facings.
c. Loose or missing rivets.
d. Broken springs.
e. Loose fit or rough movement on the transmission input shaft splines.

Small amounts of oil or grease may be removed with aerosol brake cleaner and the facings dressed with a wire brush. However, if the facings are soaked with oil or grease, the clutch disc must be replaced. The disc must also be replaced if any of the other defects is present or if the facings are partially worn and a new cover plate is being installed.

Pressure Plate/Cover Assembly Inspection

Check the pressure plate/cover surface for:

a. Scoring.
b. Burn marks.
c. Cracks.

Check the diaphragm springs (**Figure 12**) for wear or damage at the release bearing contact surface. Check for bent or broken spring fingers and replace the pressure plate/cover assembly if found.

If the clutch trouble is still not apparent, take the assembly and disc to a Ford dealer or competent machine shop. Have the assembly checked for runout and the diaphragm springs checked for correct finger height. Do not attempt to dismantle the cover assembly or readjust the fingers yourself without the proper tools and experience.

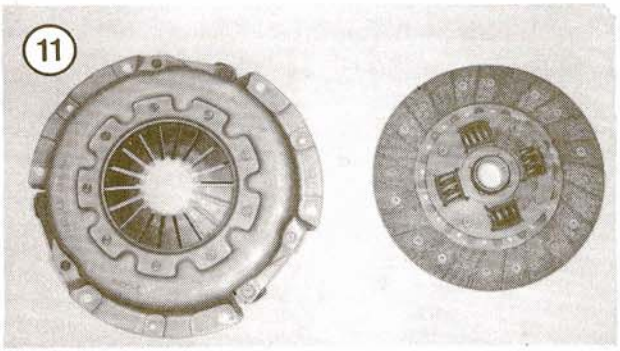

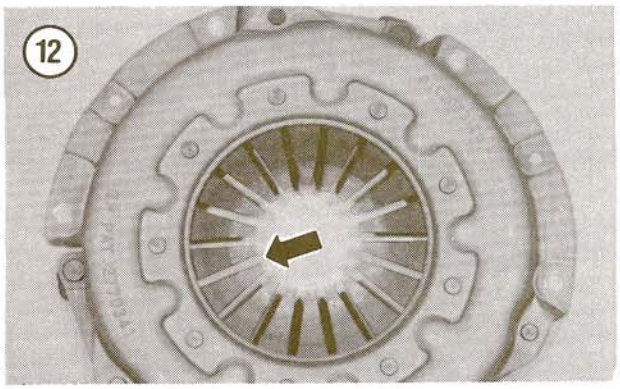

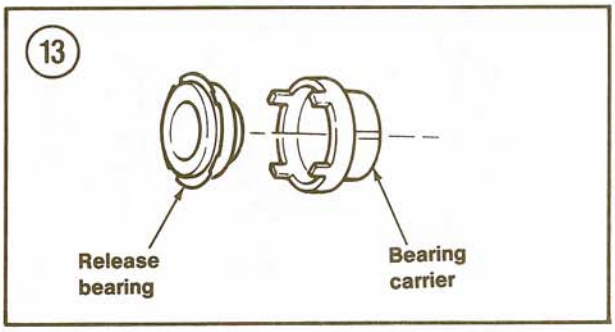

Release Bearing Inspection

The release bearing is prelubricated at the factory and should not be cleaned with solvent. The bearing and hub assembly should not be disassembled. If defective, replace as a unit.

The 1986 release bearing is attached to the clutch slave cylinder by a bearing carrier.

1. 1986—Carefully bend back the 4 plastic bearing carrier retainers and remove the release bearing from the slave cylinder. See **Figure 13**. Check bearing carrier condition for wear or damage. Replace as required.

2. Wipe all dirt or oil from the bearing with a clean cloth.
3. Hold the inner race from moving and rotate the outer race while applying a slight amount of pressure. Replace the bearing if rotation is noisy or rough.
4. 1983-1985—Check the bearing for wear signs at the point where the release lever and fingers contact it. Replace the bearing if one side is worn more than the other and check for a bent or off-center release lever.
5. Check the bearing assembly for burrs. If present, clean with fine crocus cloth, then check the transmission input shaft for scoring and polish out with crocus cloth.
6. Install bearing assembly to clutch release lever and check that the spring clips fit snugly. If they do not, replace the bearing assembly.

Installation

1. Be sure your hands are clean and free of oil or grease.
2. Make sure the disc facings, pressure plate and flywheel are free of oil, grease and other foreign material.
3. Place the clutch disc and cover plate in position on the flywheel. Make sure the alignment marks on the cover plate and flywheel are aligned.
4. Start but do not tighten the cover bolts. Center the disc and cover plate with a dummy shaft or aligning bar.
5. Tighten the cover bolts gradually in a diagonal pattern to 15-24 ft.-lb. (21-32 N•m). Remove the alignment tool.
6A. 1983-1985—Lubricate the clutch fork fingers and ball socket at the release bearing end with lithium-base grease and install the fork on the ball stud.
6B. 1986—Snap the release bearing carrier retainers on the slave cylinder.
7. Fill the annular groove on the release bearing hub with lithium-base grease.
8. Install the clutch housing and transmission as described in this chapter.
9. Install the starter motor. See Chapter Eight.
10A. 1986—Connect the hydraulic hose to the slave cylinder and install the retaining clip.
10B. 1983-1985—Install the clutch slave cylinder as described in this chapter.
11. 1986—Install the clutch master cylinder.
12. Working in the cab, reconnect the clutch master cylinder pushrod to the clutch pedal.

9

Clutch Pedal
Removal/Installation
(1983-1985)

Refer to **Figure 14** for this procedure.

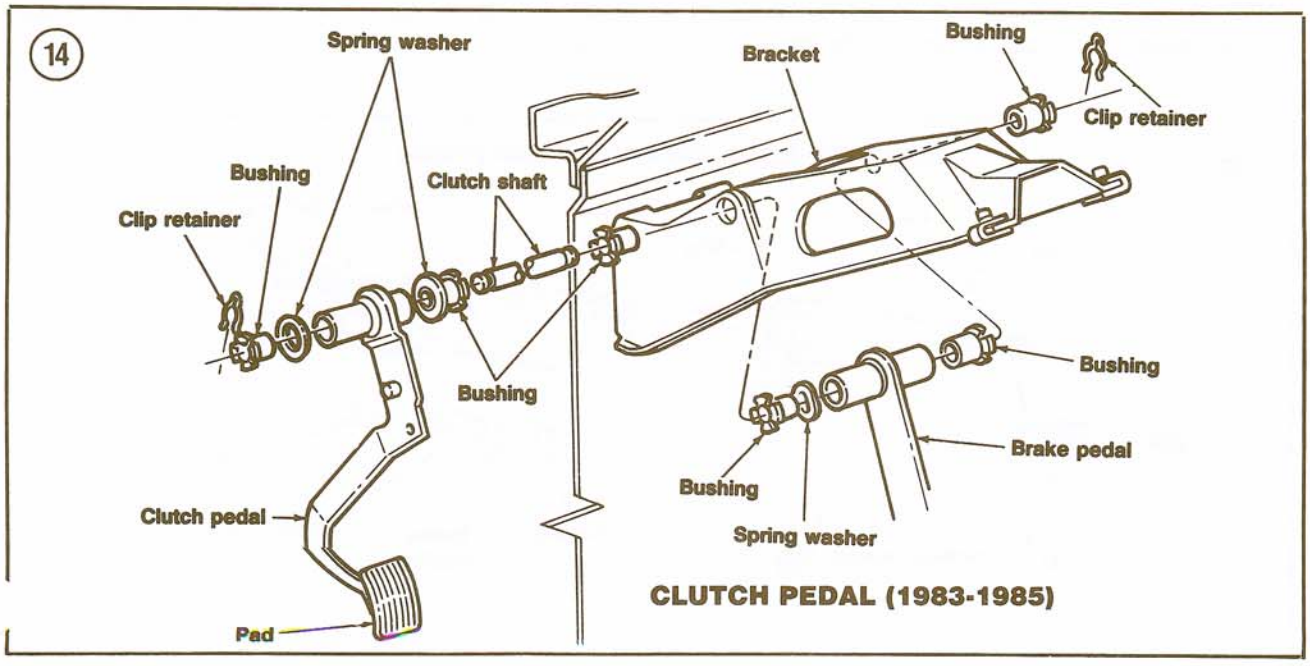

CLUTCH PEDAL (1983-1985)

1. Remove the clutch master cylinder pushrod lockpin. Separate the pushrod from the clutch pedal and remove the bushing.
2. Remove the retainer clip at the end of the clutch shaft. Remove the clutch pedal from the clutch shaft.
3. Installation is the reverse of removal. Clean, inspect and lubricate the clutch shaft bearings with SAE 30 engine oil before reinstalling them.

Clutch Pedal
Removal/Installation
(1986)

Refer to **Figure 15** for this procedure.
1. Remove the clip holding the clutch/starter interlock switch pushrod to the clutch pedal. Pry the pushrod and bushing from the clutch pedal pin with a screwdriver.
2. Remove the circlip at the end of the clutch shaft. Remove the clutch pedal assembly from the pedal support bracket.
3. Installation is the reverse of removal. Clean, inspect and lubricate the clutch shaft bearings with SAE 30 engine oil before reinstalling them.

CLUTCH INTERLOCK SWITCH

All 1985-on vehicles with a manual transmission are equipped with an interlock switch. The clutch pedal must be fully depressed in order to start the engine.

The self-adjusting interlock switch is mounted on the brake/clutch pedal support bracket. It is connected across the ignition switch and starter motor relay coil to maintain an open circuit when the clutch pedal is in the released position.

Testing

1. Flex the retaining tab on the switch housing and unplug the electrical connector.
2. Connect a self-powered test lamp across the switch terminals. The test lamp should light only when the clutch pedal is fully depressed.
3. If the switch does not operate as specified, remove the self-adjusting clip (**Figure 16**) and move it closer to the switch. Snap the clip halves together and operate the clutch pedal once to adjust the switch position. If the switch still does not operate properly, replace it.

Removal/Installation

Refer to **Figure 17** for this procedure.
1. Flex the retaining tab on the switch housing and unplug the electrical connector.
2. Remove the retaining clip holding the switch rod to the clutch pedal.
3. Remove the attaching screw from the stationar bracket.
4. Disengage the switch rod from the clutch pedal pivot and remove from the vehicle.
5. Install the switch rod on the clutch pedal pivot with the switch positioned straight down.
6. Rotate the switch upward until the attaching screw hole is aligned with the stationary bracket hole.

15 **CLUTCH PEDAL INSTALLATION (1986)**

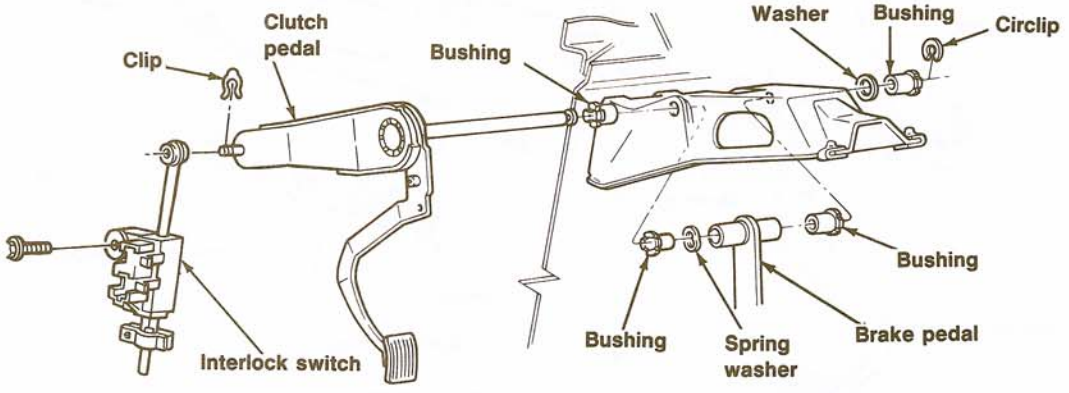

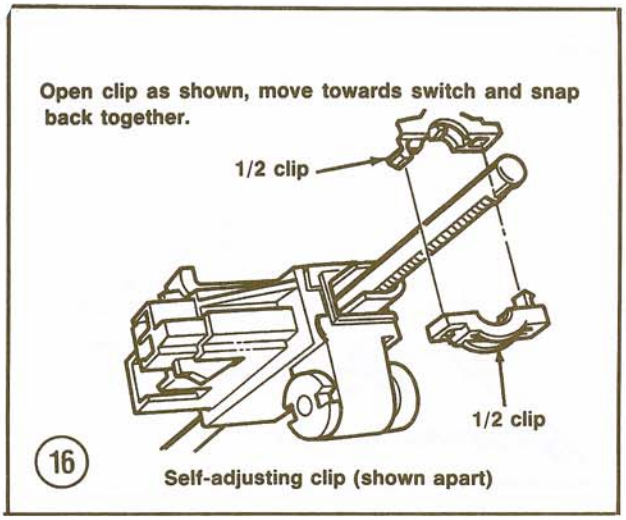

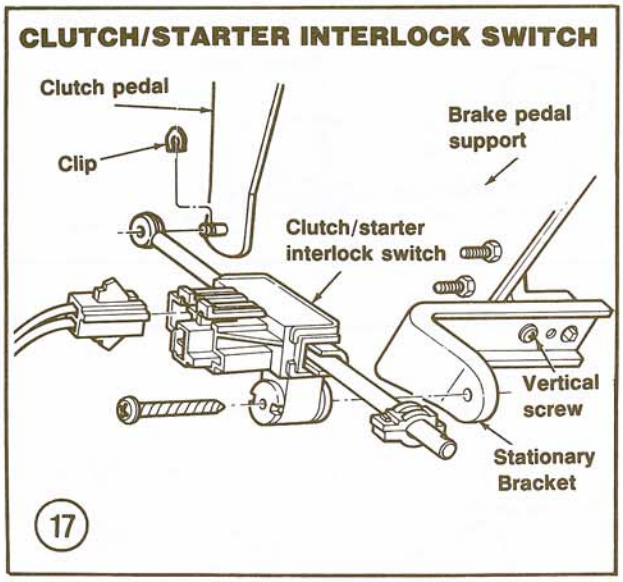

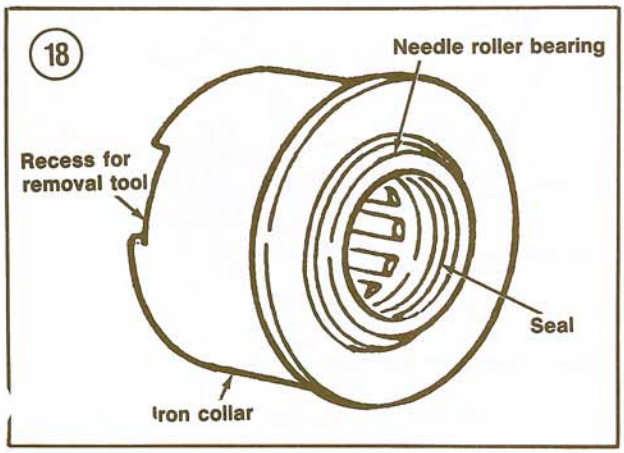

7. Install the attaching screw and reconnect the electrical connector.
8. Depress the clutch pedal to the floor to adjust the switch.

PILOT BEARING

A needle roller bearing and adaptor assembly (**Figure 18**) is used with all models.

A glazed, worn or improperly lubricated pilot bearing will produce an objectionable squeal or chirping noise when the clutch is activated.

The pilot bearing is pressed in place and should not be loose. A bearing that has been removed should never be reinstalled. If removed for any reason, install a new bearing.

Check the bearing for misalignment, scoring, heat discoloration, insufficient lubrication and excessively worn or broken rollers. Check the bearing seal for signs of grease on the retainer or crankshaft. Replace the bearing if any of these conditions are evident.

Removal/Installation

The needle bearing and adaptor assembly cannot be serviced separately. The needle bearing and seal are prelubricated and require no additional lubricant when installed.

1. Remove the clutch as described in this chapter.
2. Attach a slide hammer to bearing remover part No. T58L-101-A or equivalent and remove the bearing.
3. Clean the crankshaft bearing bore.
4. Install a new bearing with installer part No. T74P-7137-A and clutch aligner part No. T74P-1737-H (or equivalent). Make sure the bearing is properly seated and is not cocked.
5. Reinstall the clutch as described in this chapter.

CLUTCH HOUSING

An improperly aligned clutch housing may cause excessive transmission gear wear or jumping out of gear; clutch pedal or drive line vibrations; or excessive pilot bushing wear or clutch spin time.

Alignment

1. Remove the clutch as described in this chapter.
2. Clean and/or remove any nicks, burrs, paint or other foreign matter from the following surfaces:
   a. Front and rear of clutch housing.

9

b. Rear face of engine block and engine plate.
c. Flywheel and/or engine block dowels.

3. Reinstall the rear engine plate and clutch housing. Tighten bolts to specifications (**Table 1**).
4. Attach dial indicator base post part No. T75L-4201-C or equivalent to the indicator pilot tool part No. T75L-6392-A or equivalent. Install assembly through the clutch housing and into the clutch disc. See **Figure 19**.

NOTE

*The dial indicator kit requires that lever attachment part No. T75L-4201-A be connected to the indicator to extend the plunger to the proper length in Step 5. When installed, a rubber band should be used as shown in **Figure 20** to preload the lever.*

5. Install the dial indicator on the base post. Adjust the indicator position so the plunger contacts the machined circumference just inside the transmission mounting holes. See **Figure 21** (typical).
6. Push the crankshaft forward as far as possible to remove any end play.
7. Set the dial indicator to zero.
8. Remove the spark plugs to relieve compression.
9. Install a wrench on the crankshaft pulley bolt. Hold the crankshaft in the forward position and rotate it through one complete revolution while watching the indicator.
10. Note the indicator reading. If it did not return to zero, the crankshaft was not held in position properly and end play affected the reading. The maximum variation in the reading during the crankshaft revolution should not exceed 0.015 in. (0.381 mm). Repeat this step to double-check the reading.
11. Reposition the dial indicator to check face runout. See **Figure 22** (typical).
12. Repeat Step 9 and Step 10. The maximum variation in the reading during the crankshaft revolution should not exceed 0.010 in. (0.254 mm). Repeat this step to double-check the reading.
13. If the face or bore runout is not within specifications, shim the clutch housing as described in this chapter.

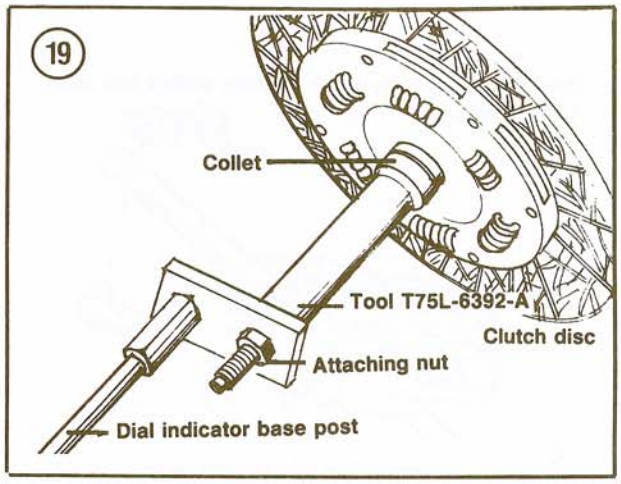

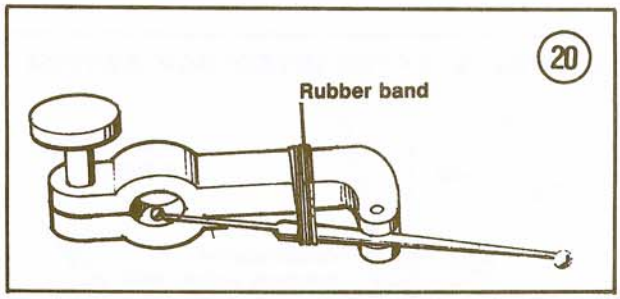

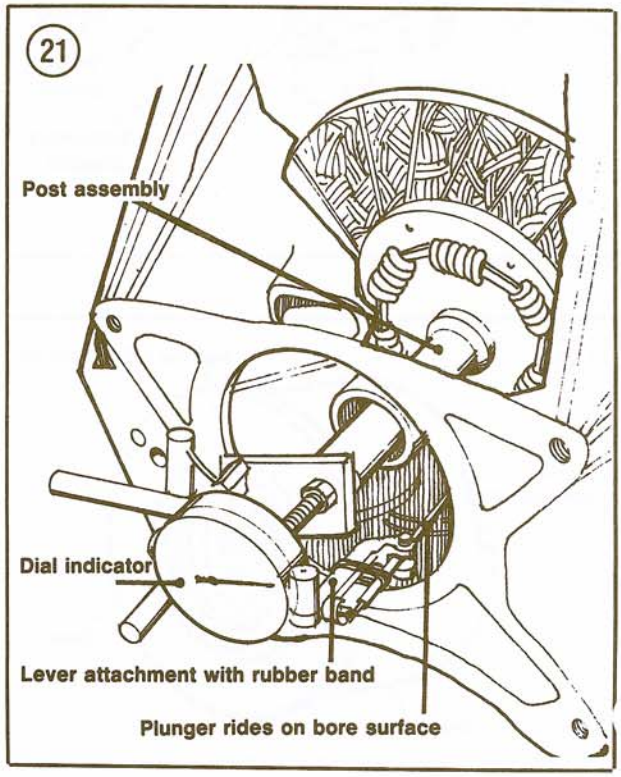

Clutch Housing Shimming

If face alignment is not within specifications, it can be changed by inserting shim material between

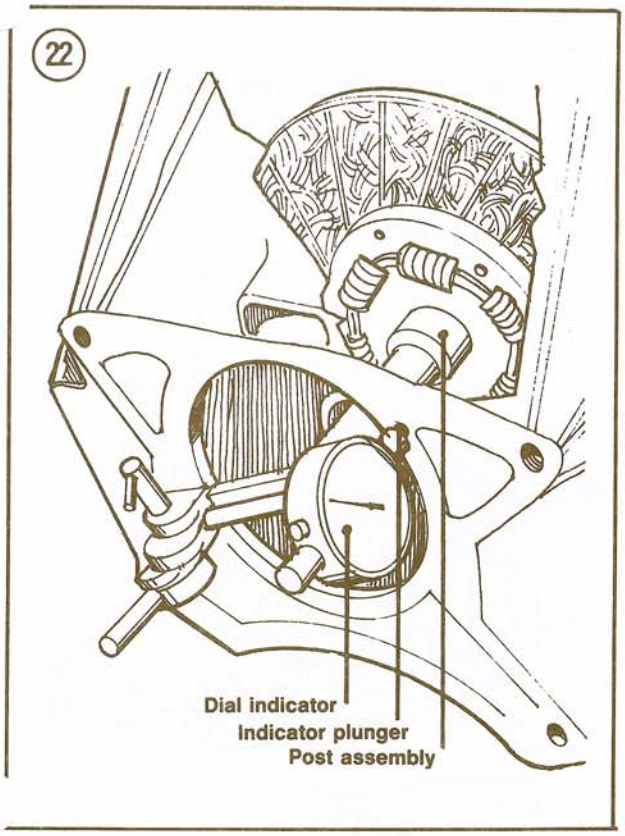

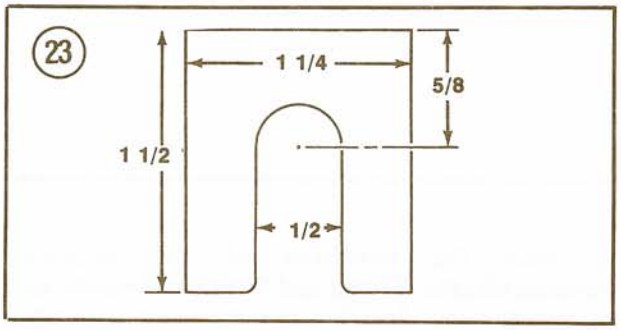

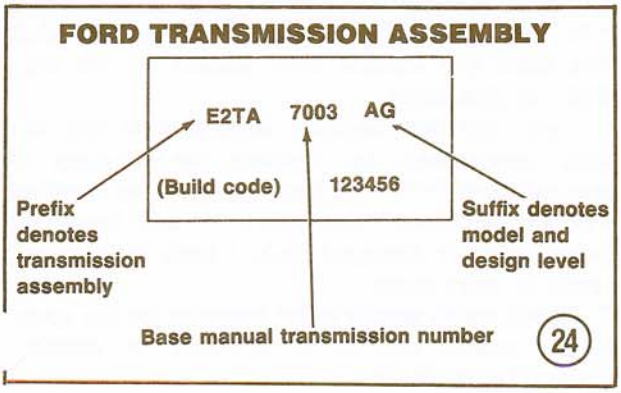

the clutch housing and engine block. Since changes in face alignment also affect bore alignment, this procedure can be used to correct bore alignment.

To correct misalignment, fabricate several shims to the shape and specifications shown in **Figure 23**. The shim thickness used should be one-half the maximum (or minus) indicator reading. Shims should be installed at the point of maximum (or minus) indicator reading.

When bore alignment cannot be brought into specifications by shimming, replace the clutch housing (even if the face alignment is correct).

MANUAL TRANSMISSION

The vehicles covered in this manual are available with a variety of manual transmissions. Gasoline-powered 2-wheel drive models may be equipped with a 4-speed or 5-speed Toyo Kogyo transmission. A separate 4-speed is installed in 1983-1984 diesel models; 1985-on diesel models use the 5-speed Toyo Kogyo transmission. The 5-speed Toyo Kogyo or a 5-speed Mitsubishi transmission is used with 4-wheel drive vehicles. All transmissions use a direct type gearshift mechanism built into the extension housing.

Transmission overhaul is not the best starting point for a beginning mechanic. Disassembly and assembly of these manual transmissions require a large number of special tools and considerable experience.

WARNING

Attempting to disassemble the 4-speed or 5-speed Toyo Kogyo transmissions without the required special tools and experience can cause the countershaft bearings to shatter as they are removed. Such bearing disintegration occurs with considerable force and may result in serious personal injury from flying metal particles.

Overhaul requires patience and the ability to concentrate. The work area must be clean, well-lighted, free of distractions and inaccessible to pets and small children.

Before starting work, read this entire section. Obtain any special tools necessary or appropriate substitutes. Check the availability of parts with local suppliers.

A service identification tag is attached to the side of the main case. This identification tag contains information required when ordering spare parts. See **Figure 24** (typical).

9

Safety Precautions (Transmissions and Transfer Cases)

The use of a suitable holding fixture is highly recommended for transmission/transfer case overhaul. Ford has made several different fixture designs available over the years covered by this book. While it may not prove economical to purchase a holding fixture just to overhaul your transmission or transfer case on a one-time basis, renting one is worth the small cost involved. It will save time, make the job easier and prevent the possibility of damage to the unit and/or possible personal injury.

The transmissions and transfer cases used in these vehicles are deceptive in appearance. Although small in size, they are extremely heavy and awkward to handle. You should not attempt to remove one from a vehicle without the use of an appropriate transmission jack, which can also be obtained from a rental house.

When handling a transmission or transfer case, it is a good idea to wear heavy gloves to improve your grip on the case and prevent possible injury from the sharp metal edges.

The use of safety goggles is highly recommended whenever you are removing snap rings. The snap rings used in transmission assemblies are extremely stiff and tend to be somewhat brittle. Safety goggles will protect your eyes from possible injury if the snap ring should break apart during removal/installation.

Safety goggles are also recommended when disassembling the 4-speed or 5-speed Toyo Kogyo transmissions in case a countershaft bearing disintegrates.

Cleaning and Inspection (Transmissions and Transfer Cases)

1. Wash the inside and outside of the transmission or transfer case thoroughly with clean solvent to dissolve or loosen old lubricant and foreign material. Make sure the vent hole is open. Blow dry with compressed air, if available.
2. Inspect the case for cracks, worn or damaged bearing bores, damaged threads or other defects.
3. Check the transmission/transfer case cover(s) for warpage or damage. Replace as required.

25

GEARSHIFT LEVER REMOVAL (TOYO KOGYO 4-AND 5-SPEED)

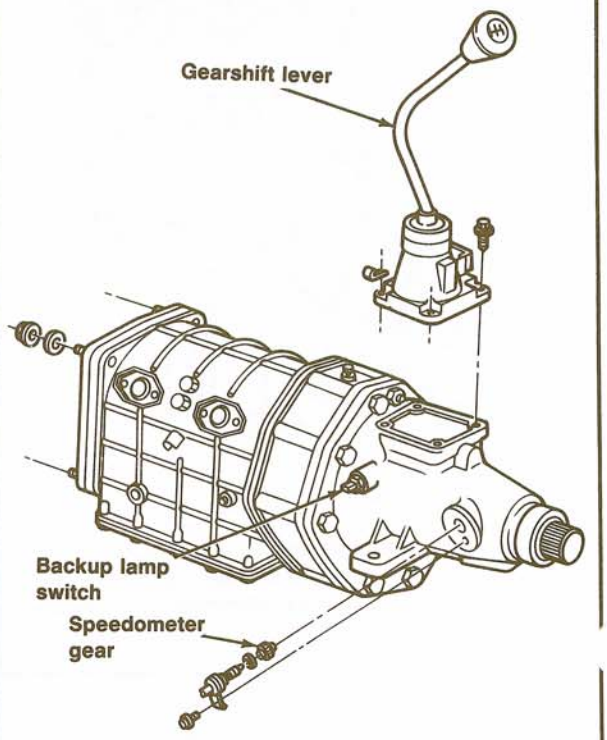

4. Check the condition of the extension housing/adapter oil seal and bushing. Remove and discard the seal. Install a new seal with a suitable installer tool.
5. Check the condition of all shift levers, forks, rails and shafts. The clearance between the shift fork shaft and control lever should be less than 0.031 in. (0.8 mm).
6. Clean the ball bearings with solvent and dry with compressed air, holding the bearings to prevent them from rotating. Lubricate the bearings with clean transmission lubricant and check for loose, worn or damaged balls. Check for cracked, rough or worn races.
7. Check caged needle roller bearings for flat spots. If one needle bearing is defective or missing, replace the entire set.

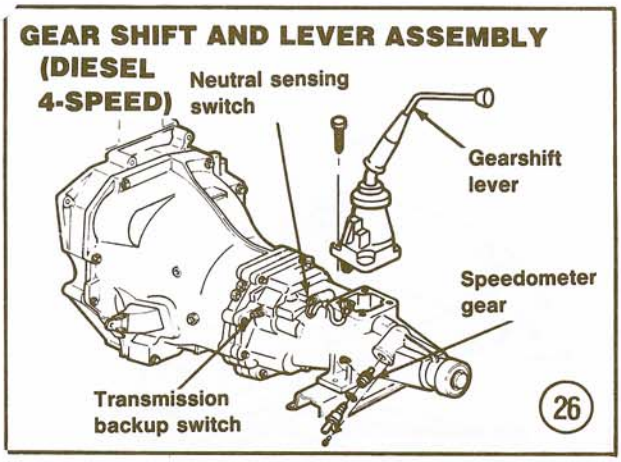

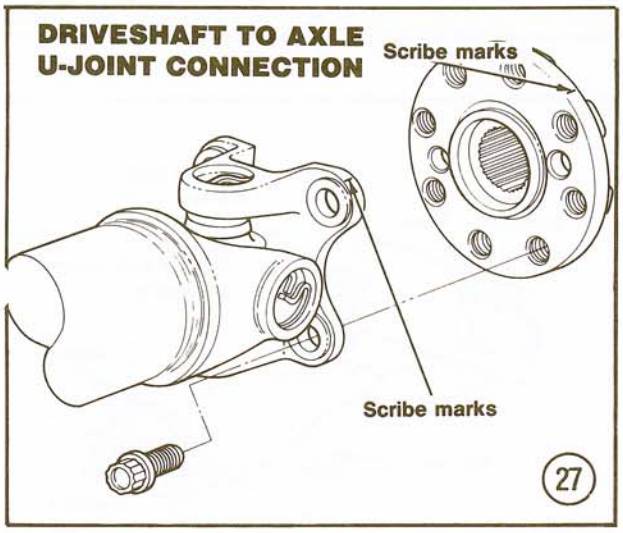

8. Check all gears for chipped, worn or broken teeth. Replace the input shaft if the gear teeth are defective or if the cone surface is damaged.
9. Check all shafts for wear, scoring or an out-of-round condition. Mainshaft runout should be less than 0.0012 in. (0.03 mm).
10. Check the drive chain for wear or damage.
11. Check the synchronizer sleeves for free movment on their hubs. Check the synchronizer rings for rounded teeth or enlarged index slots.
12. Check the contact surface of shift forks with the clutch sleeve. The clearance should be less than 0.020 in. (0.5 mm).
13. Check thrust washers for excessive wear and scoring or other surface damage. Replace as required.
14. Discard all snap rings and install new ones during assembly.

Transmission Shift Lever Removal/Installation (All Models)

Refer to **Figure 25** (Toyo Kogyo 4- and 5-speed) or **Figure 26** (diesel 4-speed) for this procedure. The Mitsubishi 5-speed is similar.
1. Move the gear shift lever to the NEUTRAL position.
2. Remove the screws holding the boot retainer.
3. Remove the bolts holding the retainer cover to the gear shift lever retainer.
4A. Mitsubishi 5-speed—Pull the gear shift lever from the transfer case adapter.
4B. All others—Pull the gear shift lever with shim and bushing straight up and out of the gear shift lever retainer.
5. Cover the shift tower opening in the extension housing or transfer case adapter with a cloth to prevent the entry of contamination.
6. Installation is the reverse of removal. Tighten diesel 4-speed attaching bolts to 6-10 ft.-lb. (8-14 N•m). Tighten all others to 15-20 ft.-lb. (21-27 N•m).

9

Transmission Removal/Installation

This generalized procedure can be used to remove any manual transmission.
1. Disconnect the negative battery cable on gasoline models. Disconnect both negative battery cables on diesel models.
2. Disconnect the clutch master cylinder pushrod from the clutch pedal as described in this chapter.
3. Remove the gear shift lever as described in this chapter.
4. Raise the vehicle with a jack and place it on jackstands.
5. Scribe match marks on the drive shaft and rear axle companion flanges. Disconnect the drive shaft at the rear axle (**Figure 27**).
6. Pull the drive shaft downward and disengage it from the transmission. Plug the extension housing with a clean shop cloth to prevent leakage.
7A. 1983-1985—Remove the clutch slave cylinder as described in this chapter. Wire it to a frame member out of the way.
7B. 1986—Unclip and disconnect the hydraulic hose at the slave cylinder control assembly.

8. Disconnect the speedometer cable at the extension housing (2-wheel drive) or transfer case adapter (4-wheel drive).
9. Disconnect the back-up switch, neutral switch, shift indicator switch and any other electrical leads at the transmission. See **Figure 25** or **Figure 26** (typical).
10. Position a jack under the engine. Place a wooden block between the engine oil pan and the jack.
11. 4-wheel drive—Remove the transfer case as described in this chapter.
12. Remove the starter. See Chapter Seven.
13. Position a transmission jack under the transmission.
14. Remove the bolts and washers holding the transmission to the engine.
15. Remove the transmission mount-to-crossmember nuts and bolts. See **Figures 28-30** (typical).
16. Remove the crossmember-to-frame side rail nuts. Remove the crossmember. See **Figures 28-30** (typical).
17. Lower the engine jack, working the clutch housing off the locating dowels. Slide the transmission to the rear until the input shaft splines clear the clutch disc. Remove the transmission and drain the lubricant.
18. Installation is the reverse of removal. Tighten all fasteners to specifications (**Table 1**). Refill the transmission with a sufficient quantity of the recommended lubricant (Chapter Three).

TOYO KOGYO 4- AND 5-SPEED TRANSMISSION

The 4- and 5-speed manual transmissions are fully synchronized except for reverse gear, which is in constant mesh. All forward speed gears are helical-cut; the reverse gear and reverse idler gear are spur-cut. The 5-speed is very similar in design to the 4-speed, with the addition of the 5th gear extension.

To prevent damage to the aluminum transmission case, all fasteners that contact the case must have a flat washer installed next to the case. This allows the fastener to be tightened without damaging the aluminum surface.

Transmission Disassembly

1. Mount the transmission in a suitable holding fixture.

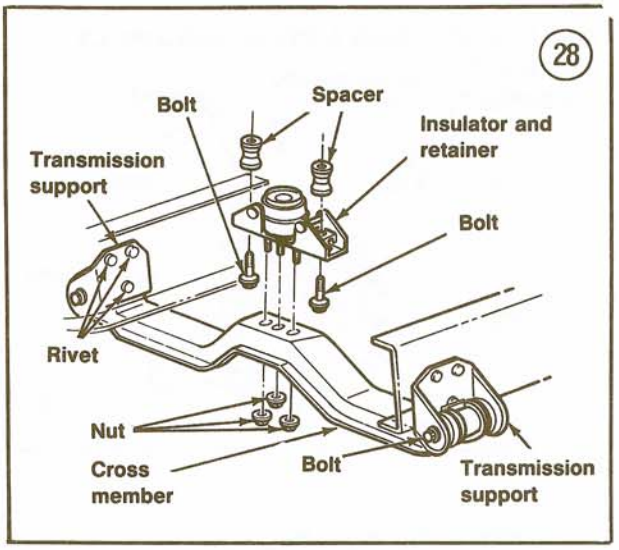

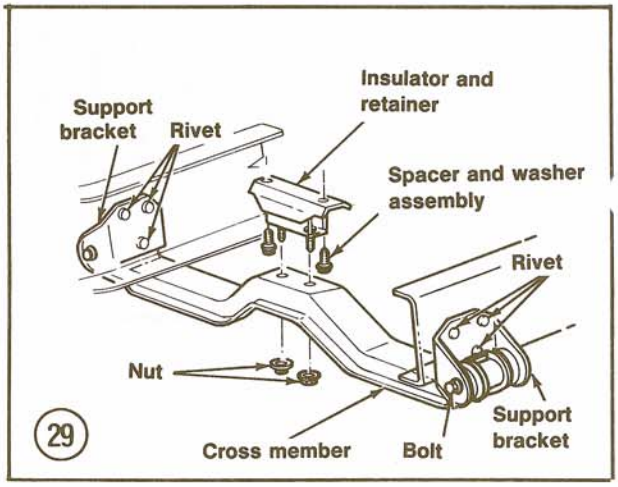

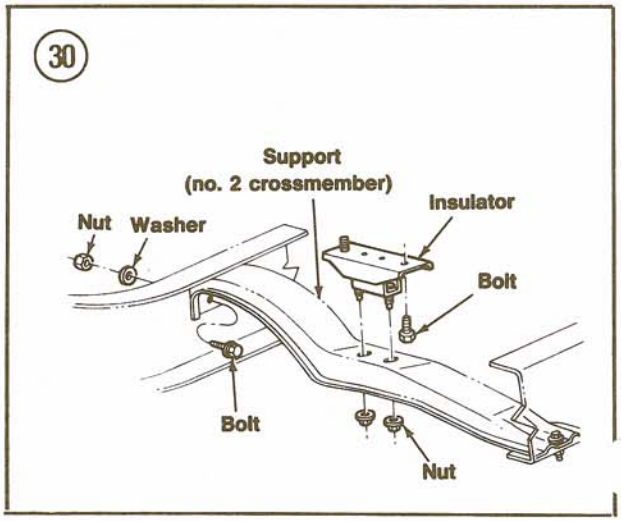

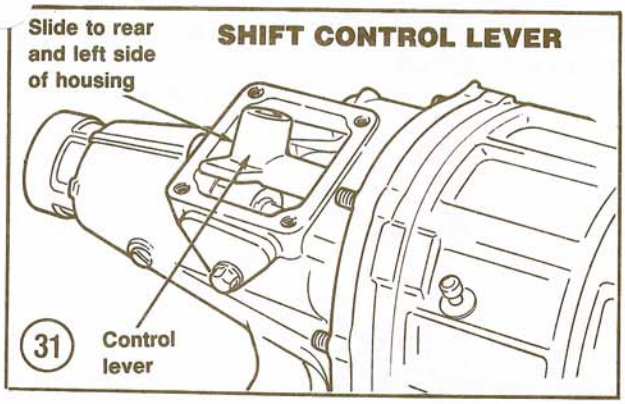

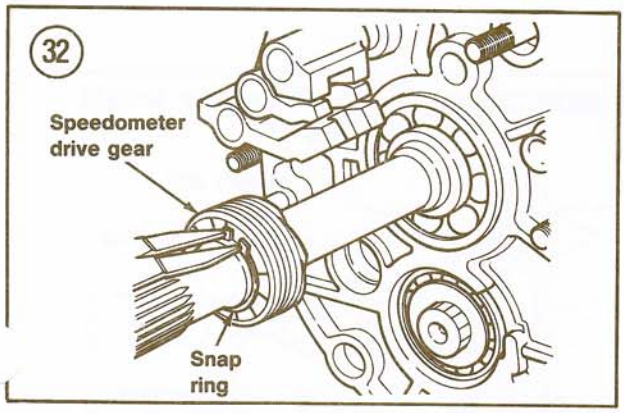

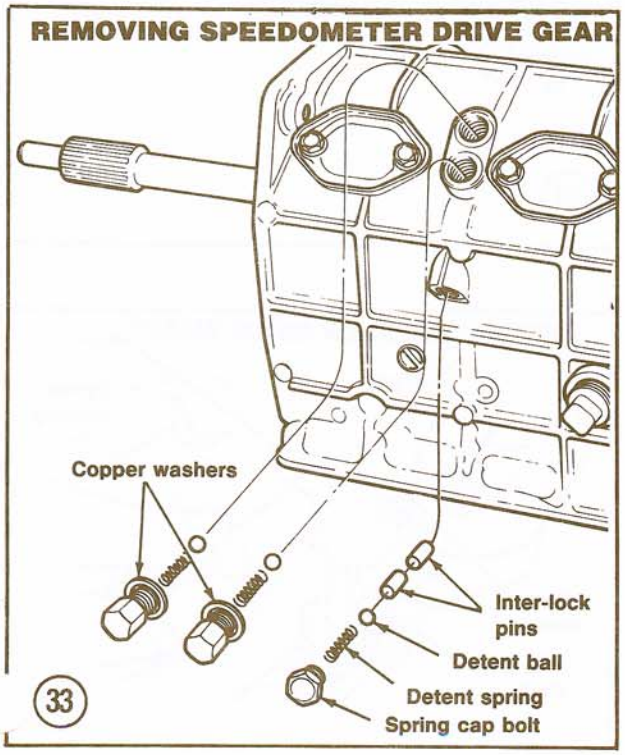

2. Unbolt the clutch housing from the transmission case. Discard the gasket.
3. Place a suitable container under the transmission. Remove the drain plug and drain the transmission lubricant. While the lubricant is draining, clean any metallic particles from the drain plug magnet. When lubricant has drained, reinstall the drain plug.
4. Remove the speedometer sleeve and driven gear from the extension housing (2-wheel drive) or transfer case adapter (4-wheel drive).
5. Unbolt the extension housing (2-wheel drive) or transfer case adapter (4-wheel drive). Raise the control lever to the left and slide it toward the rear of the transmission (**Figure 31**), then carefully slide the extension housing or transfer case adapter off the mainshaft to prevent damage to the oil seal. Remove and discard the gasket.
6. Remove the rubber anti-spill ring from the rear of the mainshaft, if so equipped. This ring is installed at the factory and can be discarded, as it is not required for reassembly.
7. Expand and remove the speedometer drive gear snap ring. Remove the drive gear and lock ball. See **Figure 32**.
8. Loosen the bolts holding the transmission case cover to the case in several stages to prevent warping. Remove the cover and discard the gasket.
9. Remove the 3 spring cap bolts. Remove the detent springs and balls with a magnetic pencil. See **Figure 33**.
10. Remove the blind covers from the transmission case. Discard the gaskets.
11. 4-speed—Remove the reverse shift fork shaft assembly and reverse idler gear from the transmission case.

NOTE

Steps 12-20 apply only to the 5-speed transmission.

12. Mark the shift rails and forks for reassembly reference. Remove the roll pins holding the shift rod ends to the shift rod with a suitable punch and hammer. Remove the shift rod ends. See **Figure 34**.
13. Carefully pry the bearing housing loose, then remove from the transmission case and slide it off the mainshaft.
14. Expand and remove the snap ring holding the rear bearing on the mainshaft.
15. Assemble bearing puller tools part No. T77J-7025-J, T77J-7025-H and T84T-7025-B on

9

remover/replacer tool part No. T75L-7025-B as shown in **Figure 35**. Fit tool assembly over mainshaft and insert puller jaws behind the bearing. Tighten the forcing screw and draw the bearing off the mainshaft.

16. Use the same tools as shown in **Figure 36** to remove the countershaft rear bearing.
17. Remove the counter 5th gear and spacer from the countershaft.
18. Lightly tap the center housing with a soft-faced hammer to break the seal, then remove the housing with reverse idler gear and 2 spacers.
19. Remove the 12 mm center housing capscrew and pull the idler gear shaft from the housing. See **Figure 37**.
20. Remove the roll pin holding the 5th/reverse shift fork with a suitable pin punch. Slide the shift fork shaft out of the transmission case.

NOTE

If transmission is not fully shifted into 4th gear in Step 21, the roll pin will wedge against a gear when driven out. This complicates the disassembly procedure, as the roll pin must be destroyed with pliers to free the gear and access is very limited to accomplish this.

21. Shift the transmission into 4th gear to provide space to drive out the 3rd/4th shift fork roll pin with a suitable pin punch. Remove the 3rd/4th shift shaft from the rear of the case.
22. Remove the 1st/2nd shift fork roll pin with a suitable pin punch. Remove the 1st/2nd shift shaft from the rear of the case. Remove both interlock pins (**Figure 38**).
23. 5-speed—Expand and remove the snap ring holding the 5th gear on the mainshaft. Remove the

INSTALLING MAINSHAFT REAR BEARING PULLER TOOLS

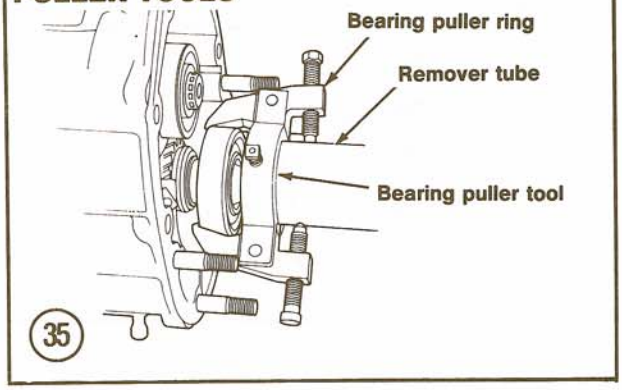

REMOVING COUNTERSHAFT REAR BEARING

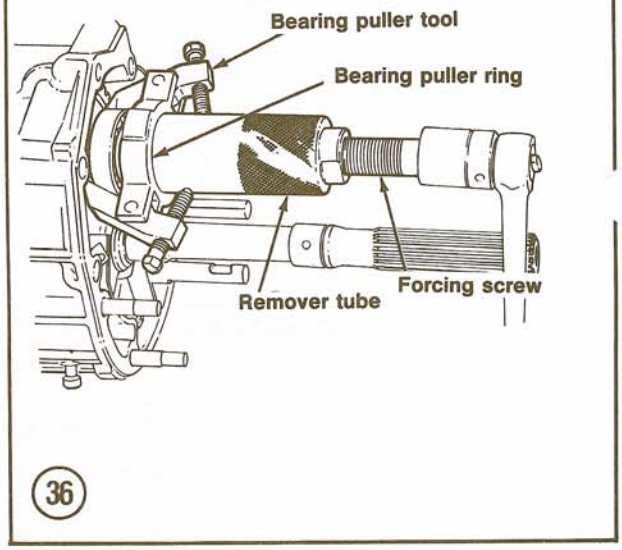

REMOVING SHIFT ROD END

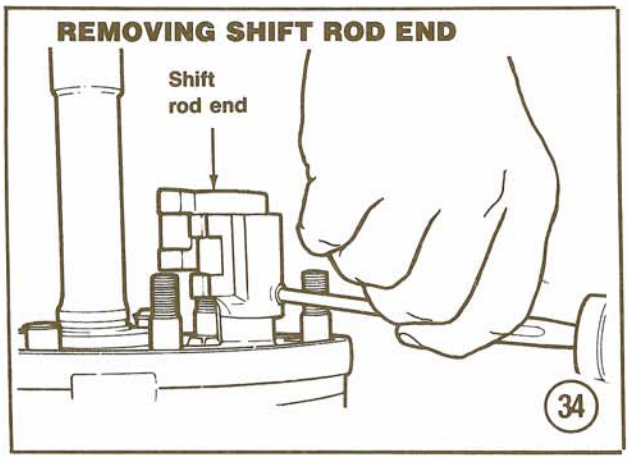

REMOVING IDLER GEAR SHAFT

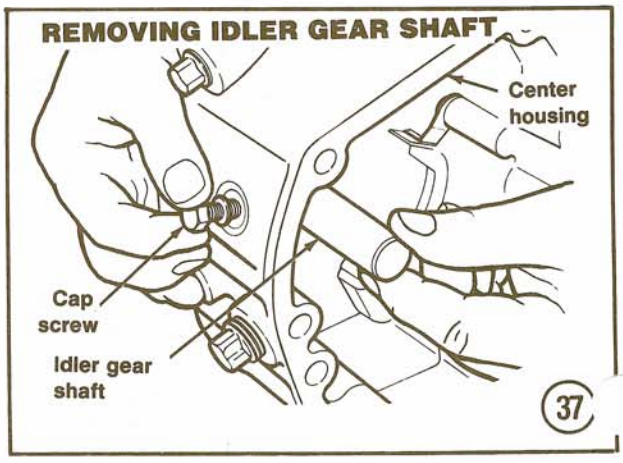

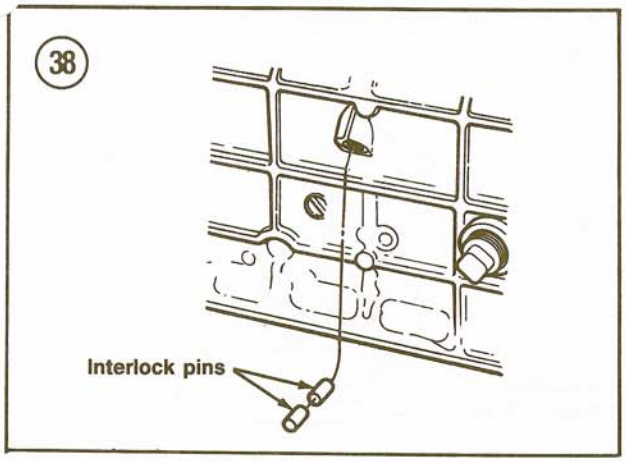

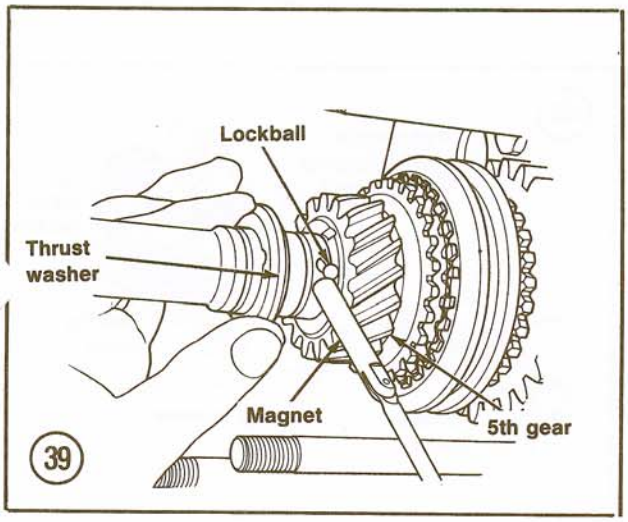

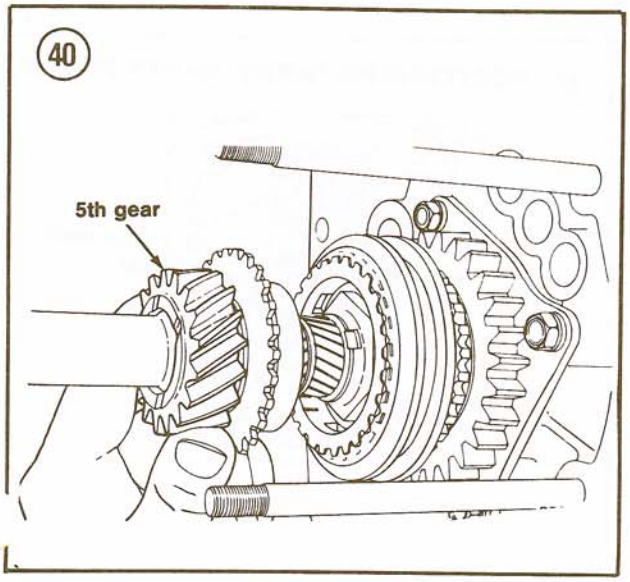

thrust washer and lockball (**Figure 39**), the 5th gear and synchronizer ring (**Figure 40**) from the mainshaft.

24. 4-speed—Reinstall the reverse idler gear to lock the gears.

25. Install synchro ring holder/countershaft spacer part No. T77J-7025-E between the 4th speed synchro ring and gear on the mainshaft as shown in **Figure 41**.

26. Shift the transmission into 2nd gear. This will lock the mainshaft and prevent the assembly from rotating.

27A. 4-speed:

a. Straighten the bent part of the lockwasher with a chisel.
b. Remove the mainshaft bearing locknut/washer with locknut wrench part No. T77J-7025 and adapter part No. T77J-7003-CH.
c. Slide the reverse idler gear off the mainshaft.
d. Remove the mainshaft Woodruff key.
e. Remove the reverse gear.
f. Expand and remove the countershaft snap ring. Remove the countershaft reverse gear.

27B. 5-speed:

a. Straighten the staked part of the bearing locknut with staking tool part No. T77J-7025-F or equivalent.
b. Remove the mainshaft bearing locknut with locknut wrench part No. T77J-7025.
c. Slide the reverse gear and clutch assembly off the mainshaft.
d. Remove the countershaft reverse gear.

28. If installed in a holding fixture, remove the transmission case and place on a clean workbench.

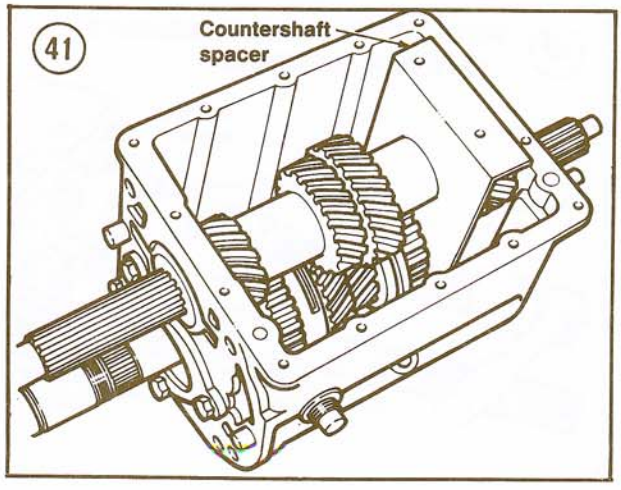

29. Unbolt and remove the bearing retainer. The reverse idler gear shaft is removed with the 4-speed retainer.
30. Assemble bearing puller tools part No. T77J-7025-J, T77J-7025-H and T84T-7025-B on remover/replacer tool part No. T75L-7025-B as shown in **Figure 42**. Rotate countershaft bearing retainer ring to position its split area as shown in **Figure 43**, then fit the tool assembly over the countershaft, inserting the puller jaws squarely into the recessed areas behind the retainer ring. Tighten the forcing screw and draw the bearing off the countershaft.
31. Position the mainshaft bearing retainer ring as shown in **Figure 43**, then use the same tools as shown in **Figure 44** to remove the bearing.
32. Remove the mainshaft shim and spacer.
33. Install two 10 mm× 1.5 nuts on each front cover stud and remove all 4 studs, then unbolt the front cover and remove it from the case. Retrieve the shim installed on the inside of the cover.
34. Expand and remove the input shaft snap ring.
35. Repeat Step 30 to remove the input shaft bearing.
36. Turn both shift forks until the mainshaft gear train drops into the bottom of the transmission case, then remove the forks.
37. Rotate the input shaft until one of its flats faces upward. See **Figure 45**.
38. Expand and remove the countershaft front snap ring.
39. Remove the synchro ring holder (part No. T77J-7025-E) from the front of the transmission case, inserting it between the countershaft 1st gear and the rear of the case. See **Figure 46**.

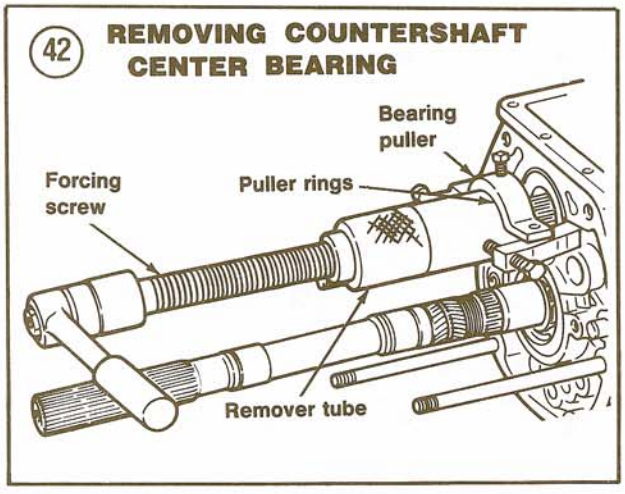

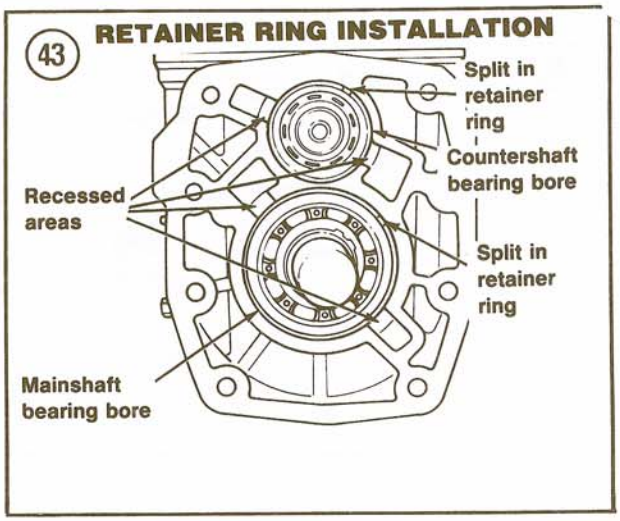

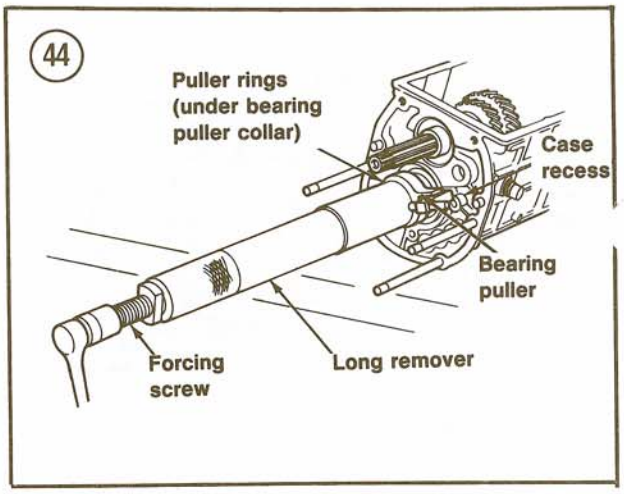

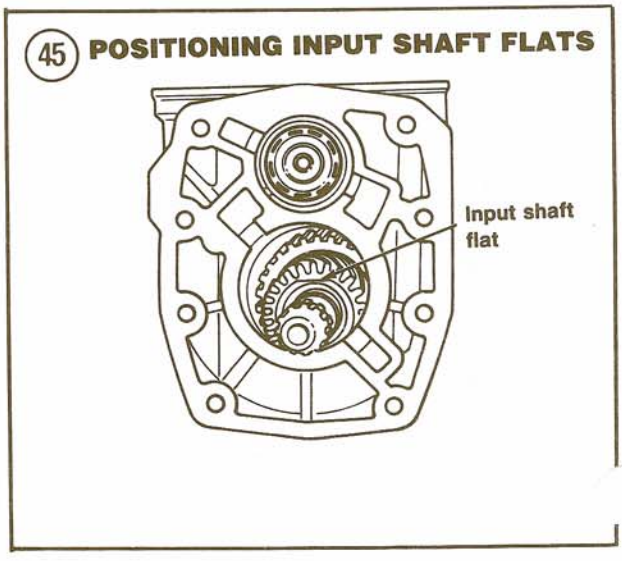

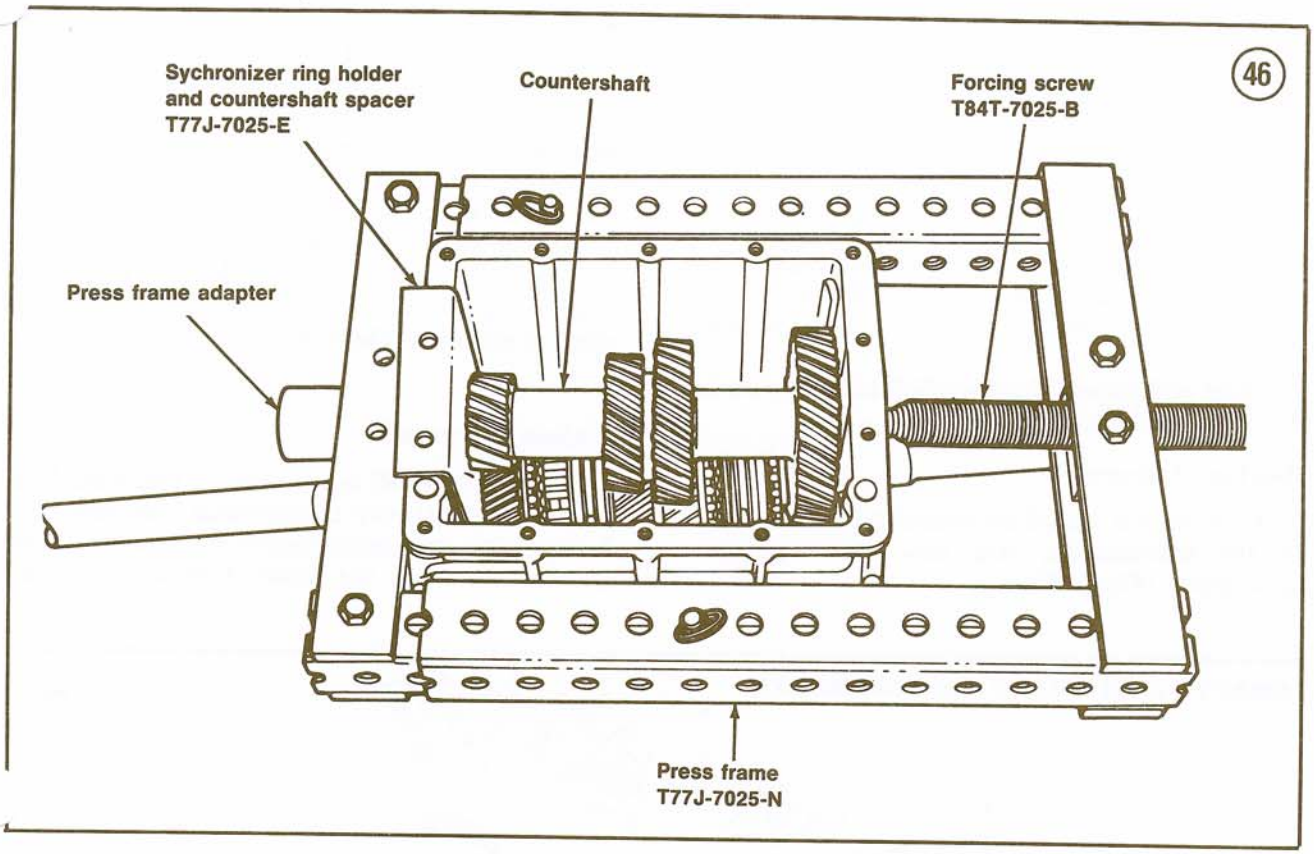

46

REMOVING COUNTERSHAFT FRONT BEARING

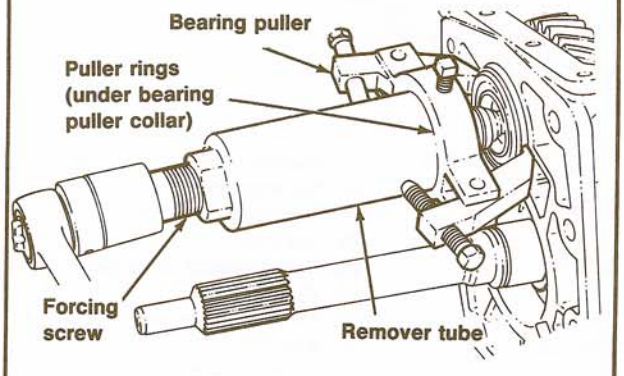

47

40. Assemble press frame part No. T77J-7025-H and part No. T82T-7003-BH against the countershaft assembly with forcing screw part No. T84T-7025-B, as shown in **Figure 46**.
41. Tighten the forcing screw to move the countershaft to the rear until it touches the synchro ring holder.
42. Remove the press frame assembly. Assemble bearing puller tools part No. T77J-7025-J, T77J-7025-H and T84T-7025-B on remover/ replacer tool part No. T75L-7025-B as shown in **Figure 47**.
43. Rotate countershaft bearing retainer ring to position its split area as shown in **Figure 43**, then fit the tool assembly over the countershaft, inserting the puller jaws squarely into the recessed areas behind the retainer ring. Tighten the forcing screw and draw the bearing off the countershaft.
44. Remove the bearing shim and countershaft from the transmission case.
45. Remove the input shaft from the transmission case.
46. Remove the synchro ring and caged bearing from the mainshaft, then remove the mainshaft and gear assembly from the transmission case.

Mainshaft Disassembly

Refer to **Figure 48** as required for this procedure.

1. Remove 1st gear and its synchro ring from the mainshaft.
2. Expand and remove the mainshaft snap ring.
3. Install a universal bearing puller between 2nd and 3rd gears, then press the mainshaft from the 3rd gear and 3rd/4th clutch sleeve. See **Figure 49**.
4. Press the 1st/2nd clutch hub and sleeve and the 1st gear sleeve from the mainshaft. Remove 2nd gear.
5. Clean and inspect the mainshaft and all gears as described in this chapter.

Bearing Clearances

1. Measure and record the mainshaft bearing bore in the transmission rear case with a depth micrometer (**Figure 50**).
2. Measure and record the height of the mainshaft rear bearing (**Figure 51**).
3. Subtract the measurement taken in Step 3 from the measurement in Step 2 to determine the necessary shim thickness.
4. Repeat Steps 2-4 to determine the thickness of the countershaft front bearing shim.
5. Repeat Steps 2-4 to determine the thickness of the mainshaft bearing shim. Measure the clutch adapter plate bearing bore on the second step of the plate as shown in **Figure 52**.

Mainshaft Assembly

Refer to **Figure 48** as required for this procedure.

1. Coat all parts with transmission lubricant.
2. Assemble both synchronizer assemblies. Fit the synchro keys into the clutch hub key slots and

SHAFTS AND GEARS DISASSEMBLED (48)

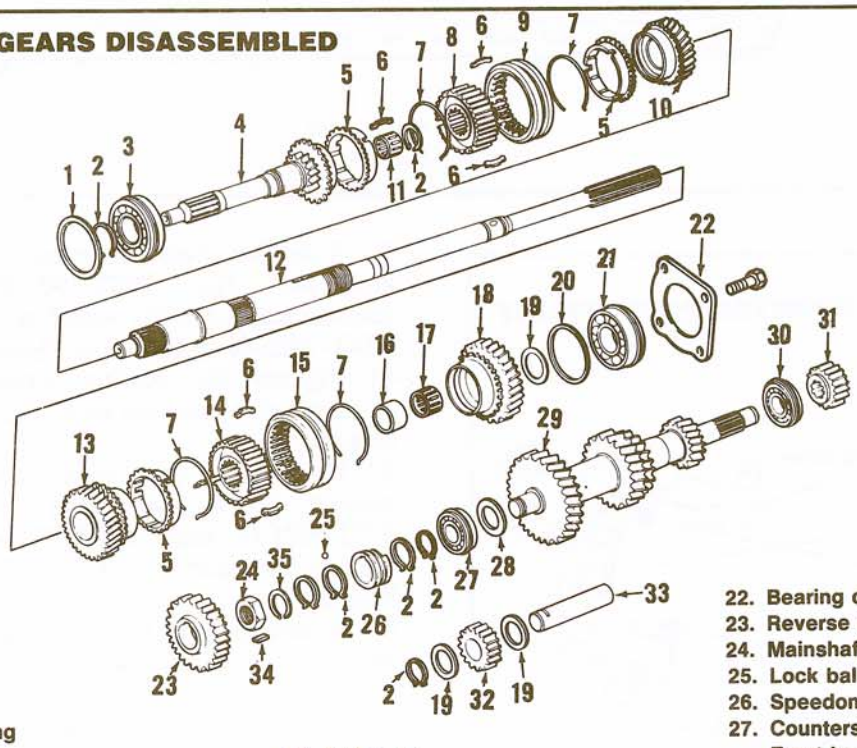

1. Shim
2. Snap ring
3. Input bearing
4. Input gear
5. Synchronizer ring
6. Synchronizer key
7. Synchronizer key spring
8. 3rd-and-4th clutch hub
9. Clutch sleeve
10. 3rd gear
11. Caged bearing
12. Mainshaft
13. 2nd gear
14. 1st-and-2nd clutch hub
15. Clutch sleeve
16. 1st gear sleeve
17. Bearing
18. 1st gear
19. Thrust washer
20. Shim
21. Mainshaft front bearing
22. Bearing cover
23. Reverse gear
24. Mainshaft lock nut
25. Lock ball
26. Speedometer drive gear
27. Countershaft Front bearing
28. Shim
29. Countershaft
30. Countershaft rear bearing
31. Counter reverse gear
32. Reverse idler gear
33. Idler gear shaft
34. Key
35. Lockwasher

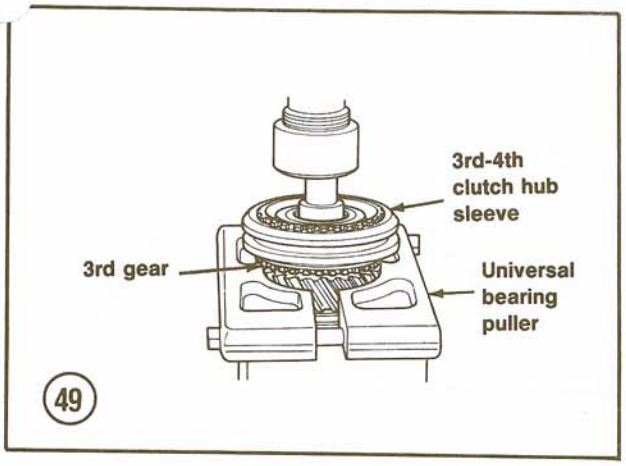

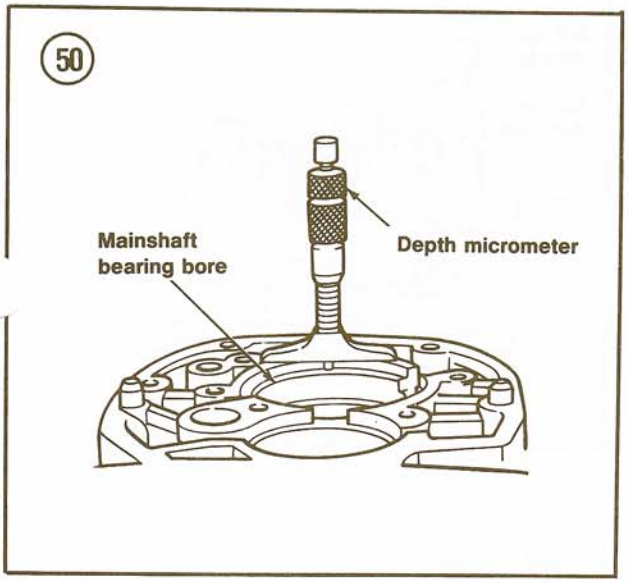

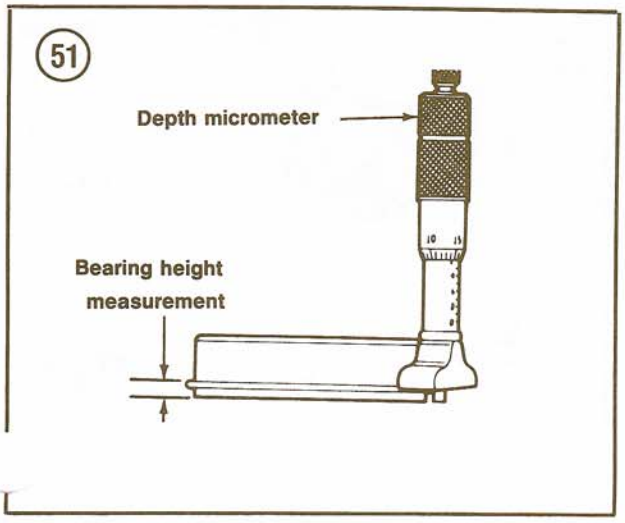

install the springs to the hub (**Figure 53**). Make sure the open end tab of the springs is inserted in the hub holes with the springs in the same direction (**Figure 54**) to maintain uniform tension on each key.

3. Position the 2nd gear synchro ring on 2nd gear. Fit the gear on the mainshaft with the synchro ring facing the rear of the shaft, then slide the 1st/2nd clutch hub and sleeve on the mainshaft with its oil grooves facing the front of the shaft. Engage the synchro hub and ring, then install the assembly on the shaft with a suitable mandrel and hydraulic press.

4. Install 1st gear sleeve on the mainshaft. Position the 3rd gear synchro ring on 3rd gear with the caged roller bearing. Slide 3rd gear to the front of the mainshaft with the synchro ring facing the front of the shaft, then slide the 3rd/4th clutch hub and sleeve on the mainshaft. Engage the synchro hub and ring, then install the assembly on the shaft with a suitable mandrel and hydraulic press.

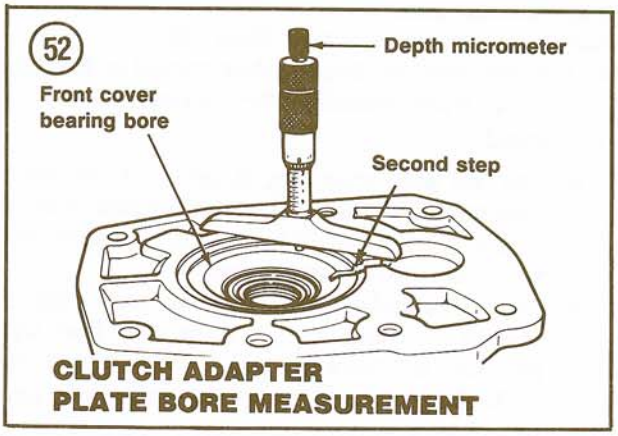

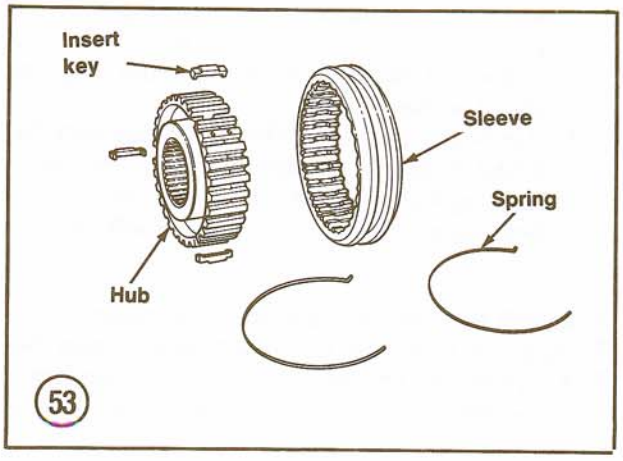

5. Expand and install a new mainshaft snap ring.
6. Slide the 1st gear needle bearing on the mainshaft.
7. Position the 1st gear synchro ring on 1st gear. Slide the assembly on the mainshaft with the synchro ring facing the front of the shaft. Engage the synchro hub and ring, then install the original mainshaft thrust washer.

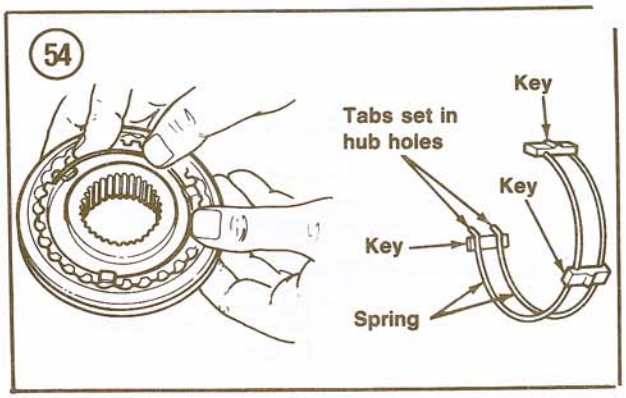

Transmission Assembly

Assembly is the reverse of disassembly, plus the following:
1. Install the mainshaft and gear assembly in the transmission case, then position the caged bearing on the front end of the mainshaft.
2. Fit the 4th gear synchro ring on the input shaft, then install the input shaft to the front of the mainshaft, engaging the synchro ring with the 3rd/4th synchro hub.
3. Install the 1st/2nd and 3rd/4th shift forks in the transmission case, engaging their respective clutch sleeve grooves as shown in **Figure 55**.
4. Use the shim thicknesses determined in *Bearing Clearances* when installing the bearings.
5. 5-speed:
   a. The 5th gear snap ring is selective. Install a new snap ring that will provide a clearance of 0.0039-0.0118 in. (0.1-0.3 mm) between the snap ring and thrust washer.
   b. The countershaft rear bearing snap ring is selective. Install a new snap ring that will provide a clearance of 0.0000-0.0059 in. (0.00-0.15 mm) between the snap ring and thrust washer.
   c. The mainshaft rear bearing snap ring is selective. Install a new snap ring that will provide a clearance of 0.0000-0.0039 in. (0.00-0.10 mm) between the snap ring and thrust washer.
   d. Apply a thin coat of Gasket Maker part No. E2AZ-19562-A or equivalent to the center housing/transmission case and the bearing housing/center housing mating surfaces.

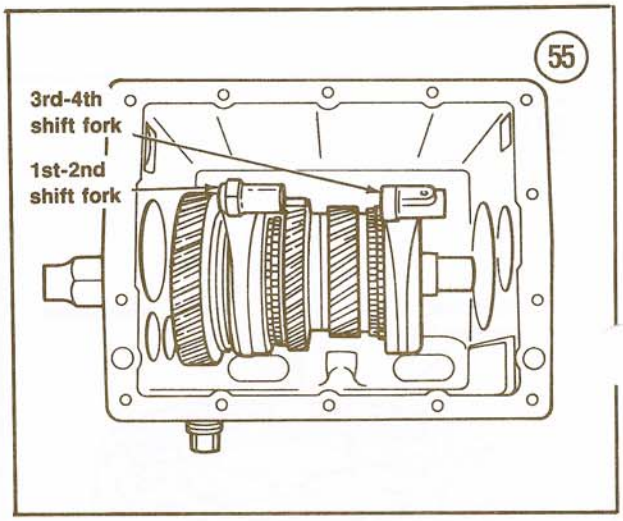

6. Install new roll pins and use new gaskets.
7. Apply a thin coat of Gasket Maker part No. E2AZ-19562-A or equivalent to the extension housing/front cover/transmission case mating surfaces.

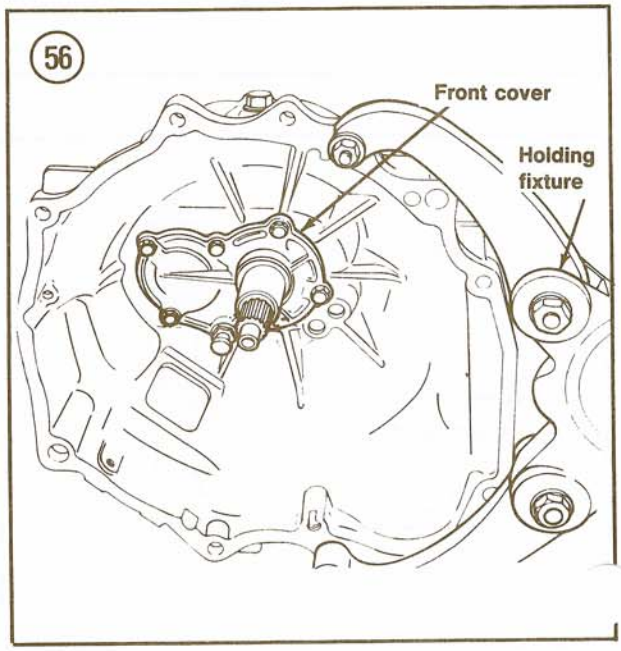

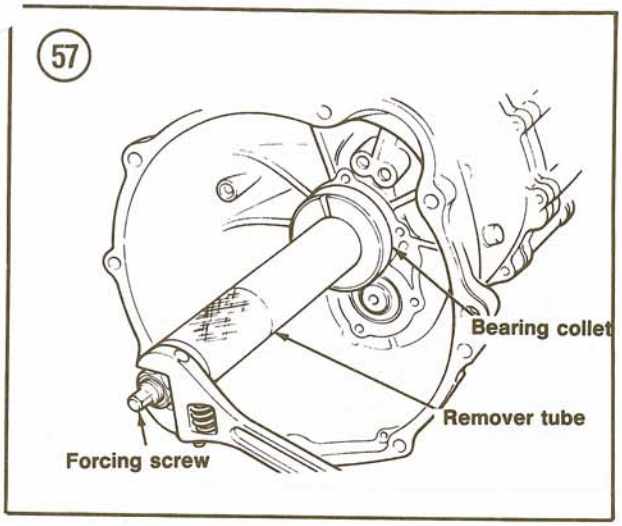

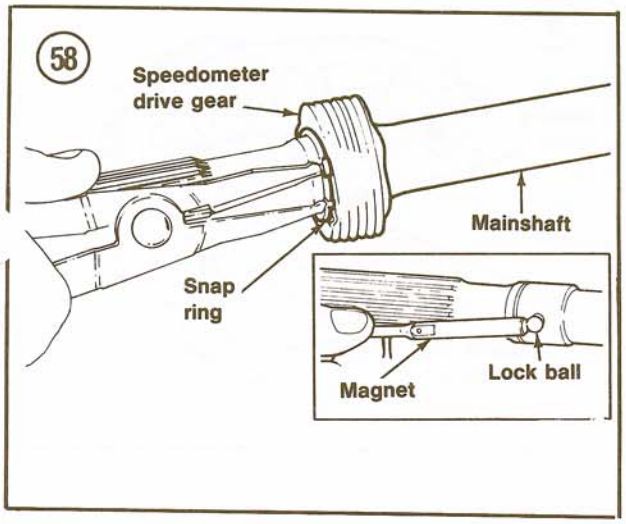

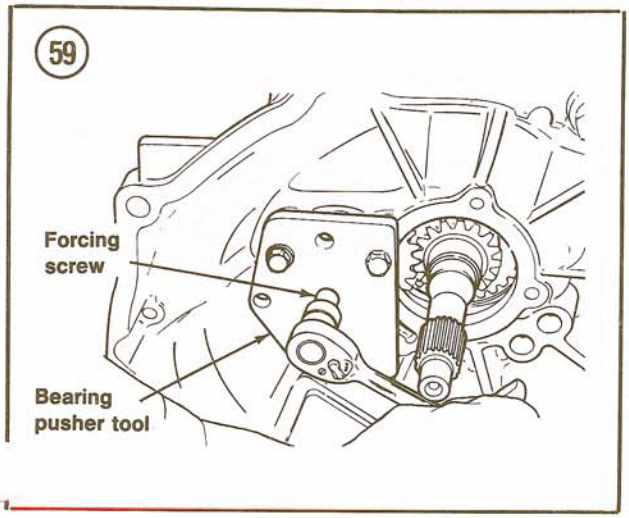

DIESEL 4-SPEED TRANSMISSION

The 4-speed diesel manual transmission is fully synchronized except for reverse gear. All forward speed gears are helical-cut; the reverse gear and reverse idler gear are spur-cut.

To prevent damage to the aluminum transmission case, all fasteners that contact the case must have a flat washer installed next to the case. This allows the fastener to be tightened without damaging the aluminum surface.

Transmission Disassembly

1. Mount the transmission in a suitable holding fixture.
2. Place a suitable container under the transmission. Remove the drain plug and drain the transmission lubricant. While the lubricant is draining, clean any metallic particles from the drain plug magnet. When lubricant has drained, reinstall the drain plug.
3. Unbolt and remove the front cover, shim and gasket from the transmission case. See **Figure 56**. Discard the gasket.
4. Expand and remove the input shaft outer snap ring.
5. Assemble remover tube part No. T75L-7025-B, forcing screw part No. T75L-7025-J and bearing collet tool part No. T75L-7025-E on the input shaft bearing. Slide collet sleeve part No. T75L-7025-G over the remover tube and bearing collet, then turn the forcing screw to remove the input shaft bearing. See **Figure 57**.
6. Unbolt the extension housing. Lower the control lever to the left as far as possible, then carefully slide the extension housing off the mainshaft to prevent damage to the oil seal. Remove and discard the gasket.
7. If necessary, unbolt and remove the control lever from the extension housing. Remove the speedometer driven gear assembly, back-up light and neutral sensing switches, if required.
8. Expand and remove the speedometer drive gear snap ring. Remove the drive gear and lock ball. See **Figure 58**.
9. Position bearing pusher tool part No. T83T-7111-A over the countershaft front bearing (**Figure 59**). Tighten the forcing screw and press the countershaft and front bearing from the transmission case.

10. Grasp the mainshaft and pull the bearing housing and gear assembly from the transmission case.
11. Remove the 3 spring cap bolts from the bearing housing. Remove the detent springs and balls with a pencil magnet. See **Figure 60**.
12. Mark the shift rails and forks for reassembly reference. Remove the roll pins holding the shift forks to the shift rods with a suitable punch and hammer. Push the shift rods to the rear through their forks and the bearing housing. Remove the rods and forks.
13. Remove the lower reverse shift rod lock ball and spring. Remove the interlock pins from the bearing housing.
14. Straighten the staked part of the bearing locknut with staking tool part No. T77J-7025-F or equivalent. Lock the transmission into any 2 gears and remove the mainshaft bearing locknut with locknut wrench part No. T77J-7025-C and adapter part No. T83T-7025-A.
15. Expand and remove the countershaft rear snap ring. Slide the counter reverse gear off the countershaft.
16. Unbolt and remove the bearing cover with the reverse idler gear shaft from the bearing housing. See **Figure 61**.
17. Remove the mainshaft and countershaft from the bearing housing by alternately tapping the rear of each shaft lightly with a soft-faced hammer.
18. Separate the input shaft from the mainshaft. Retrieve the caged needle roller bearing from the front end of the mainshaft.
19. If the rear countershaft or mainshaft bearings must be removed from the bearing housing, use a hydraulic press and suitable mandrel as required.

Mainshaft Disassembly

Refer to **Figure 62** as required for this procedure.
1. Remove the thrust washer, 1st gear and 1st/2nd synchro sleeve/rings from the mainshaft.
2. Expand and remove the mainshaft snap ring.
3. Install a universal bearing puller between 2nd and 3rd gears, then press the mainshaft from the 3rd gear and 3rd/4th clutch sleeve. See **Figure 63**.
4. Press the 1st/2nd clutch hub and sleeve and the 2nd gear from the rear of the mainshaft.
5. Clean and inspect the mainshaft and all gears as described in this chapter.

Bearing Clearances

1. If mainshaft rear bearing was removed, measure and record the bearing bore in the bearing housing

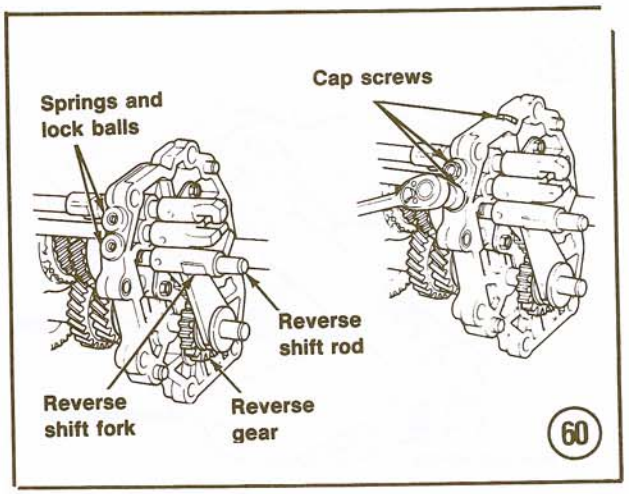

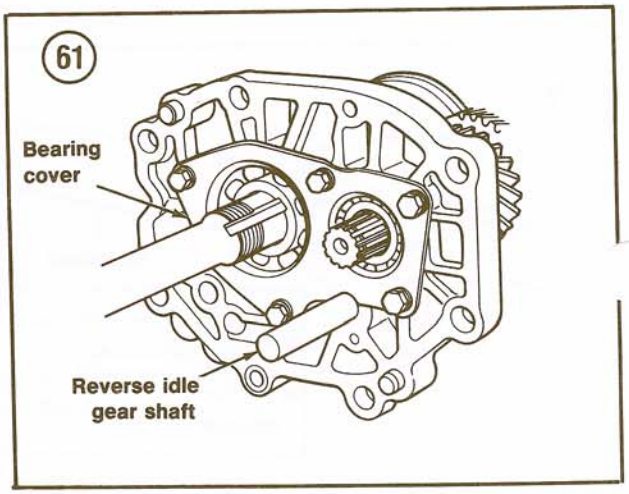

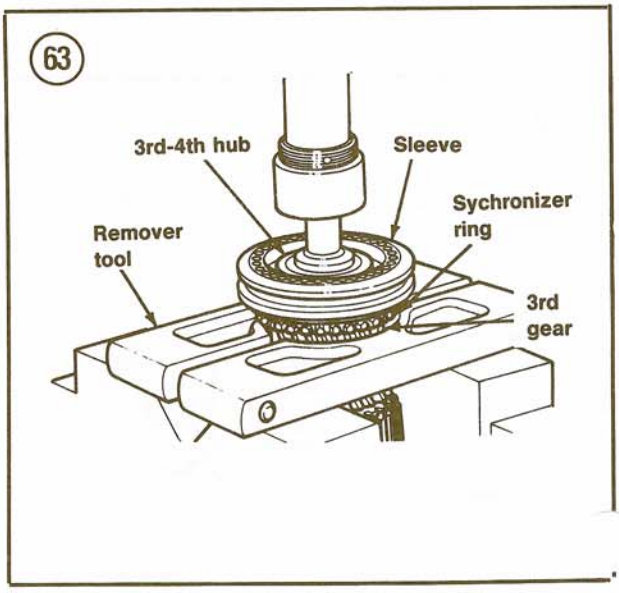

TRANSMISSION GEAR ASSEMBLIES (DIESEL 4-SPEED)

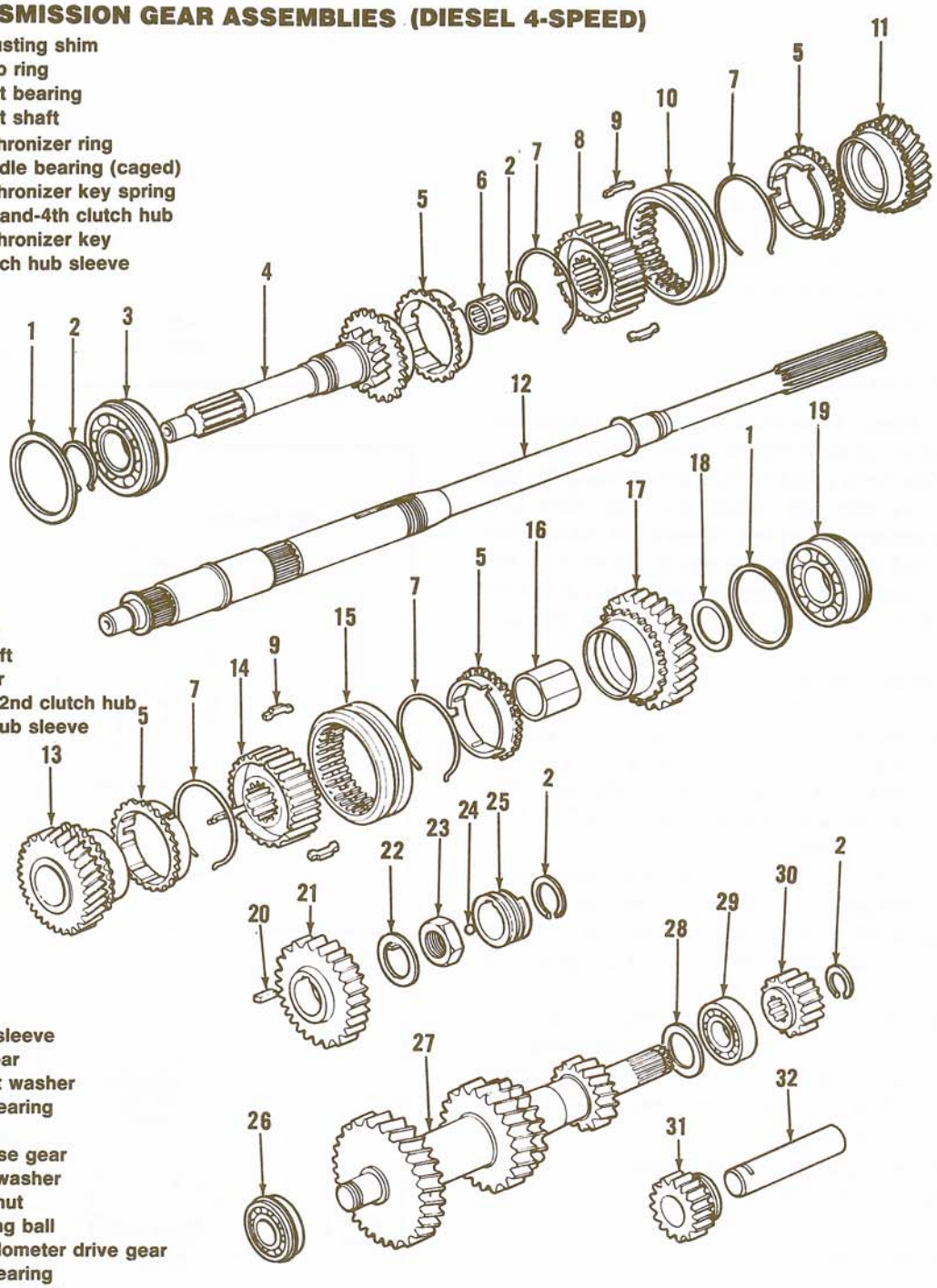

1. Adjusting shim
2. Snap ring
3. Input bearing
4. Input shaft
5. Sychronizer ring
6. Needle bearing (caged)
7. Sychronizer key spring
8. 3rd-and-4th clutch hub
9. Sychronizer key
10. Clutch hub sleeve
11. 3rd gear
12. Mainshaft
13. 2nd gear
14. 1st-and-2nd clutch hub
15. Clutch hub sleeve
16. Gear sleeve
17. 1st gear
18. Thrust washer
19. Ball bearing
20. Key
21. Reverse gear
22. Lock washer
23. Lock nut
24. Locking ball
25. Speedometer drive gear
26. Ball bearing
27. Countershaft
28. Adjusting shim
29. Ball bearing
30. Counter reverse gear
31. Reverse idle gear
32. Shaft

62

9

with a depth micrometer, then measure and record the height of the mainshaft rear bearing. See **Figure 64**. Subtract the bearing height from the bore depth to determine the necessary shim thickness. Proper clearance should be less than 0.0039 in. (0.1 mm).
2. If countershaft rear bearing was removed, repeat Step 2 to determine the thickness of the countershaft rear bearing shim. See **Figure 65**. Proper clearance should be less than 0.0039 in. (0.1 mm).
3. Reinstall bearings in bearing housing with the necessary shims, using a hydraulic press and suitable mandrels.

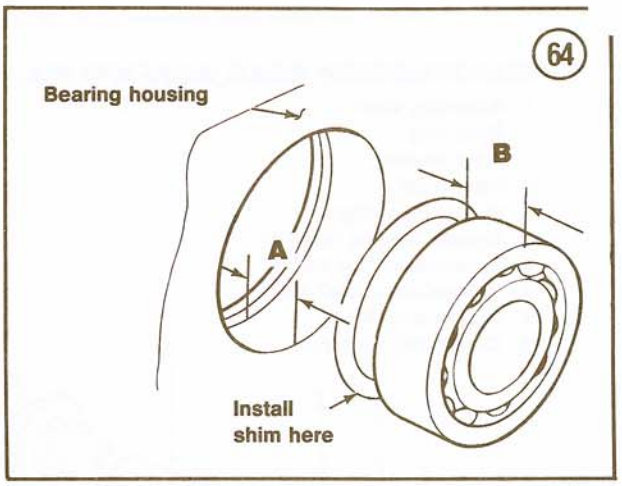

Mainshaft Assembly

Refer to **Figure 62** as required for this procedure.
1. Coat all parts with transmission lubricant.
2. Assemble both synchronizer assemblies. Fit the synchro keys into the clutch hub key slots and install the springs to the hub (**Figure 53**). Make sure the open end tab of the springs is inserted in the hub holes with the springs in the same direction (**Figure 54**) to maintain uniform tension on each key.
3. Position the 3nd gear synchro ring on 3nd gear and install on the front of the mainshaft.
4. Fit the 3rd/4th clutch hub and sleeve on the mainshaft, engage the synchro hub and ring, then install the assembly with installer tube part No. T77J-7025-B, replacer tube part No. T53T-4621-C and a hydraulic press. See **Figure 66**.
5. Expand and install a new mainshaft snap ring.
6. Fit the 2nd gear and its synchro ring on the rear of the mainshaft. Engage the synchro hub and ring, then install the assembly with a hydraulic press and suitable supports.
7. Position the 1st gear synchro ring on 1st gear. Slide the assembly on the mainshaft with the synchro ring facing the front of the shaft. Engage the synchro hub and ring, then install the original mainshaft thrust washer.
8. Install the input shaft and needle roller bearing on the front of the mainshaft.

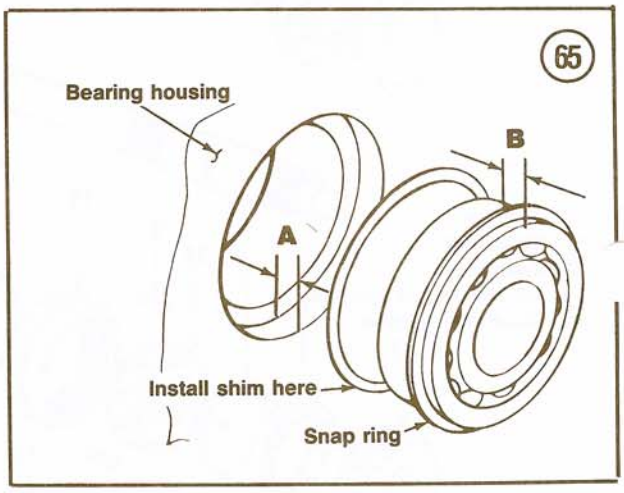

Transmission Assembly

1. Place the countershaft and mainshaft assemblies on the bearing housing, meshing their gears. Make sure that the mainshaft thrust washer is properly installed on the rear of the shaft.
2. Hold the mainshaft assembly in place and press the countershaft assembly into the bearing housing

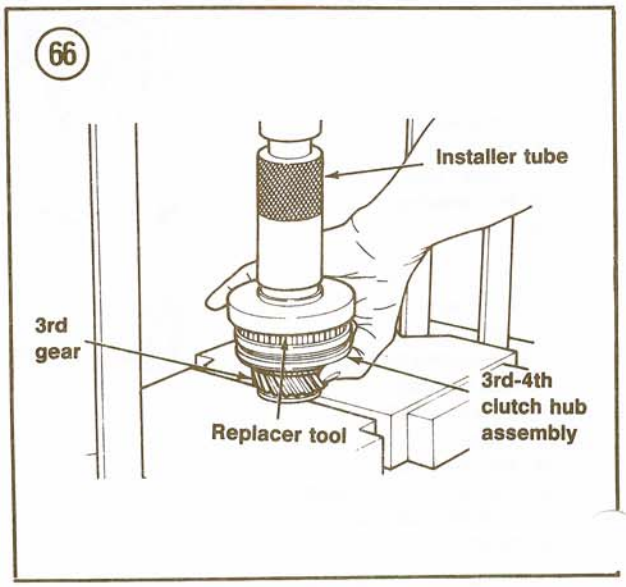

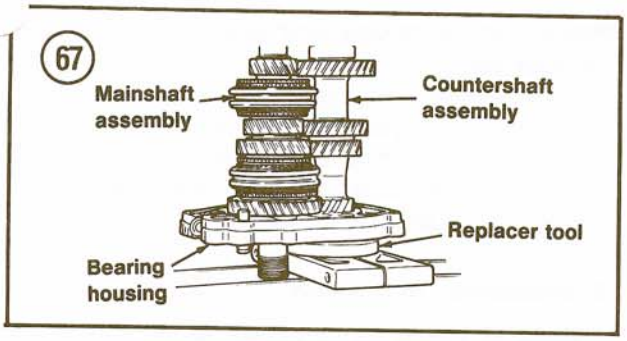

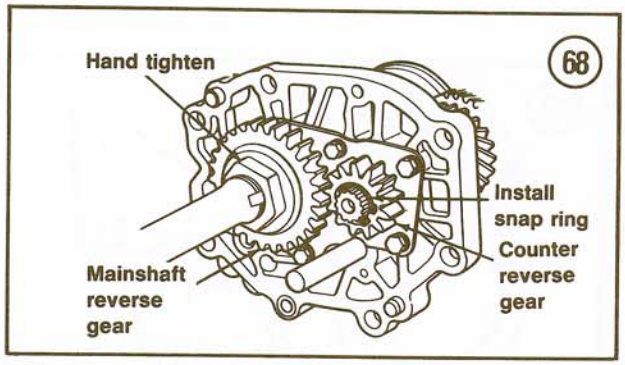

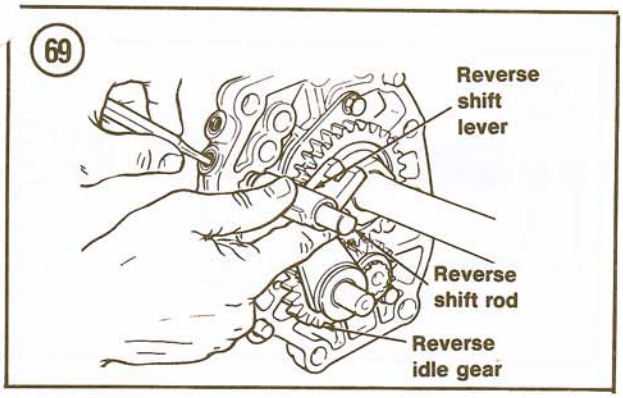

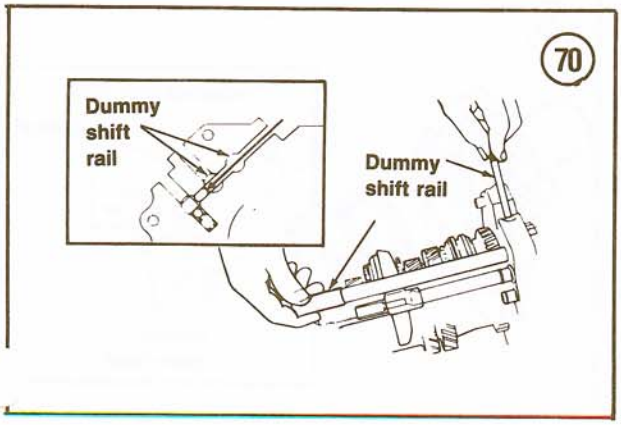

with replacer tool part No. T71P-7025-A as shown in **Figure 67**.

3. Install the bearing cover and reverse idler gear shaft on the bearing housing. Make sure the cover seats in the shaft groove. See **Figure 61**.
4. Install the mainshaft reverse gear and key with gear tooth chamfer facing to the rear. Install and hand tighten the locknut (**Figure 68**).
5. Install the countershaft reverse gear with its gear tooth chamfer facing to the rear. Expand and install a new snap ring.
6. Lock the transmission in any 2 gears and insert the short spring and lock ball in the bearing housing reverse bore. Depress the ball in the bore with a pin punch or awl and install the reverse shift rod and lever assembly with the reverse idler gear. See **Figure 69**.
7. Install each shift fork rod and interlock pin as shown in **Figure 70**, using a dummy shift rail (part No. T72J-7280).
8. Install the shift forks to their respective shift rods, align the fork and rod pin holes and install new roll pins with the pin slit facing the shift rod axis. See **Figure 71**.
9. Coat the bearing housing mating surface with silicone sealer part No. D6AZ-19562-B or equivalent, then install the housing to the transmission case and temporarily install the 2 top and 2 bottom extension housing bolts to locate the countershaft front bearing in its bore. If the shift rods do not align properly in this step, remove the welch plugs from the clutch housing shift rod bores

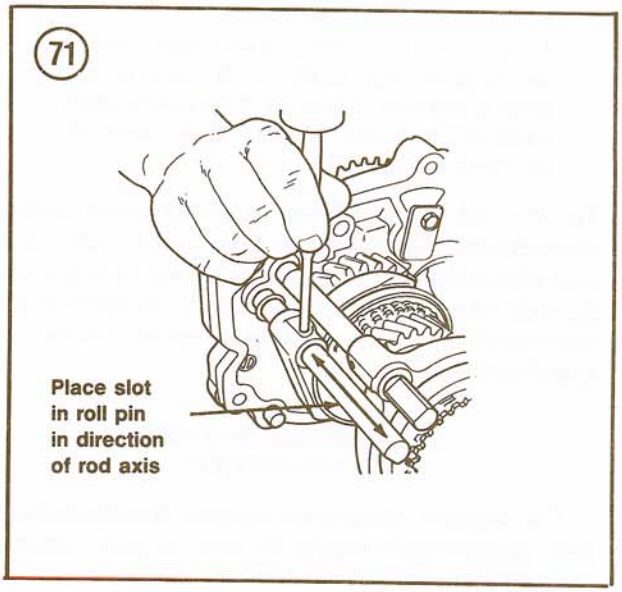

(**Figure 72**). Once the rods are aligned in the bores, reinstall new plugs with silicone sealer part No. D6AZ-19562-B or equivalent.

10. Tighten the mainshaft locknut to specifications (**Table 1**) with tool shaft part No. T77J-7025-C and adapter part No. T83T-7025-A. Stake the lockwasher tab with tool part No. T77J-7025-F or a suitable chisel.

11. Coat the speedometer drive gear lock ball with petroleum jelly and insert in the mainshaft hole, then install the drive gear. Expand and install a new snap ring.

12. Expand and install a new outer snap ring on the input shaft bearing. Fit the bearing on the input shaft, then install the tools shown in **Figure 73** in the order shown. Tighten the forcing screw to install the bearing until the snap ring seats against the housing. Remove the tools. Expand and install a new inner snap ring on the bearing.

13. If the extension housing was disassembled, reinstall the control lever, speedometer driven gear assembly and any switches removed.

14. Remove the extension housing bolts temporarily installed to align the bearing housing. Coat the bearing and extension housing mating surfaces with silicone sealer part No. D6AZ-19652-B or equivalent.

15. Holding the control housing down to the left as far as possible, reinstall the extension housing to the bearing housing. Tighten the bolts to specifications (**Table 1**) after making sure the control rod operates correctly.

NOTE

Front cover-to-bearing outer race clearance should be less than 0.0039 in. (0.1 mm) when the cover is installed in Step 16. If necessary, insert a 0.006 in. (0.15 mm) or 0.012 in. (0.3 mm) shim as shown in ***Figure 74****.*

16. Pry the oil seal from the front cover with a screwdriver. Clean the seal bore and install a new seal with a suitable installer tool. Lubricate the seal lip with transmission oil and install the cover to the transmission case. Tighten cover bolts to specifications (**Table 1**).

MITSUBISHI 5-SPEED TRANSMISSION

The 5-speed Mitsubishi manual transmission is fully synchronized except for reverse gear, which is in constant mesh. All forward speed gears are helical-cut; the reverse gear and reverse idler gear are spur-cut.

To prevent damage to the aluminum transmission case, all fasteners that contact the case must have a flat washer installed next to the case. This allows the fastener to be tightened without damaging the aluminum surface.

Transmission Disassembly

Refer to **Figure 75** or **Figure 76** as required for this procedure.

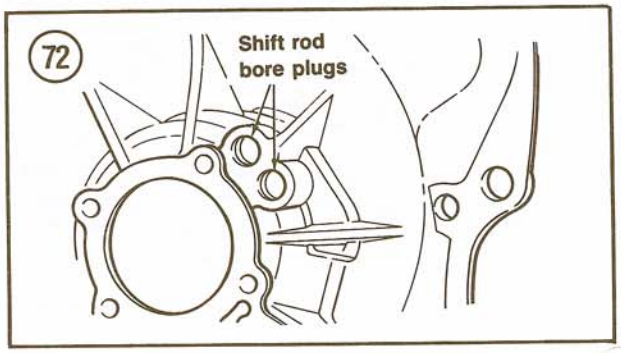

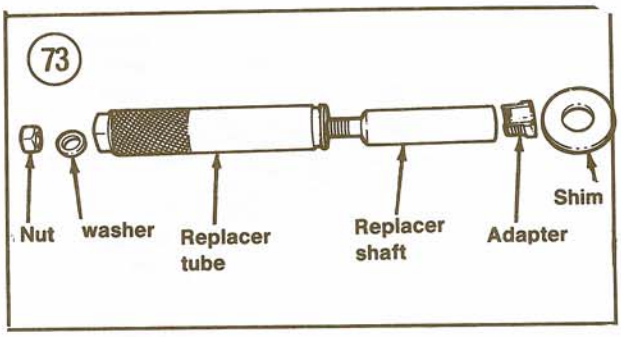

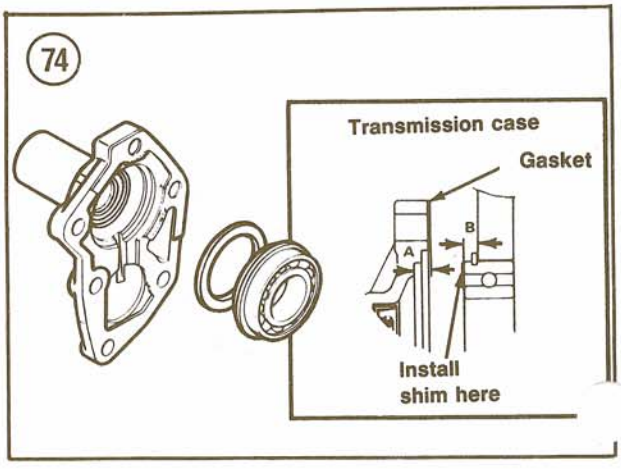

(75) **TRANSMISSION CASE—EXPLODED VIEW**

MITSUBISHI 5-SPEED

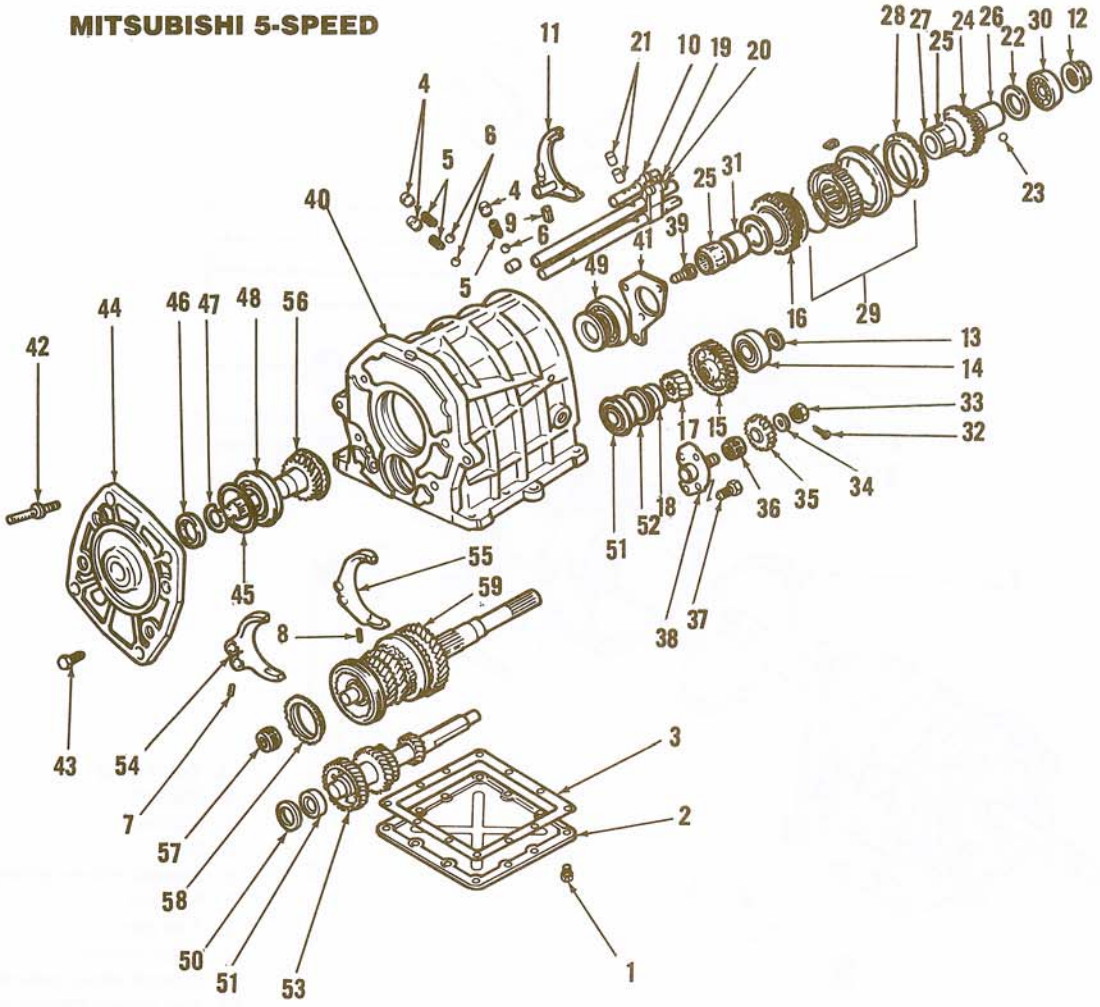

1. Bolt w/washer (12)
2. Under cover
3. Under cover gasket
4. Plug (3)
5. Poppet spring (3)
6. Steel ball (3)
7. Spring pin for 3-4 shift fork
8. Spring pin for 1-2 shift fork
9. Spring pin OD-R shift fork
10. OD-R shift rail
11. OD-R shift fork
12. Mainshaft lock nut
13. Counter gear lock nut
14. Ball bearing
15. Counter overdrive gear
16. Reverse gear
17. Counter reverse gear
18. Spacer
19. 3-4 shift rail
20. 1-2 shift rail
21. Interlock plunger
22. Thrust washer
23. Steel ball
24. Overdrive gear
25. Needle bearing
26. Overdrive gear sleeve
27. Bearing spacer
28. Sychronizer ring
29. Overdrive sychronizer assembly
30. Ball bearing
31. Sleeve
32. Split pin
33. Nut
34. Thrust washer
35. Reverse idler gear
36. Needle bearing (2)
37. Screw (4)
38. Reverse idler shaft
39. Screw (4)
40. Transmission case assembly
41. Rear bearing retainer
42. Stud (4)
43. Bolt (4)
44. Front bearing retainer
45. Spacer
46. Oil seal
47. Snap ring
48. Ball bearing
49. Angular type double bearing
50. Spacer
51. Counter rear taper bearing
52. Shim
53. Counter gear
54. 3-4 shift fork
55. 1-2 shift fork
56. Input shaft
57. Needle bearing
58. Sychronizer ring
59. Mainshaft assembly

(76) **TRANSFER CASE ADAPTER—EXPLODED VIEW**

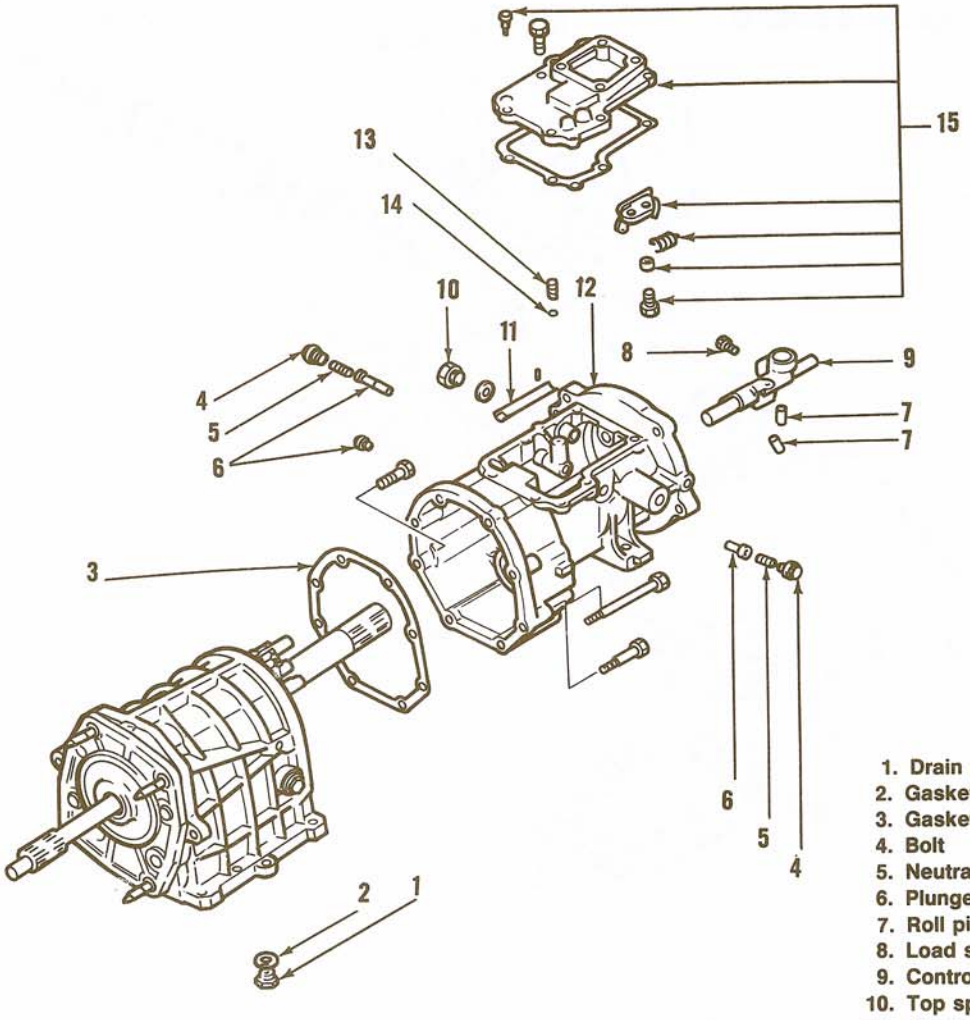

1. Drain plug
2. Gasket
3. Gasket
4. Bolt
5. Neutral return spring
6. Plunger
7. Roll pin
8. Load switch
9. Control shaft assembly
10. Top speed detect switch
11. Air gutter
12. Transfer case adapter
13. Resistance spring
14. Steel ball
15. Transfer cover assembly

1. Mount the transmission in a suitable holding fixture.

2. Place a suitable container under the transmission. Remove the drain plug and drain the transmission lubricant. While the lubricant is draining, clean any metallic particles from the drain plug magnet. When lubricant has drained, reinstall the drain plug.

3. Unbolt and remove the clutch housing from the transmission case. See **Figure 77**.

4. Remove the clutch slave cylinder from the input shaft. See **Figure 77**.

5. Remove the back-up lamp, shift indicator and neutral position switch (if so equipped) from the transfer case adapter.

6. Unbolt and remove the transmission oil pan and gasket. Discard the gasket.

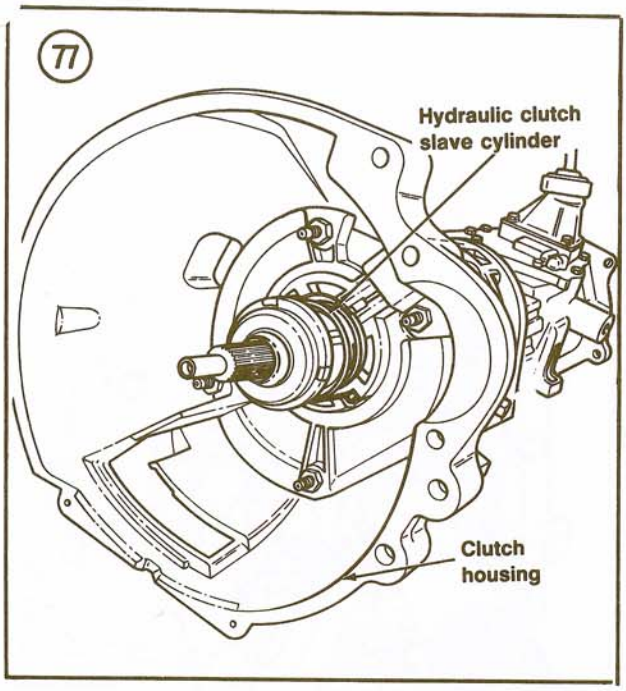

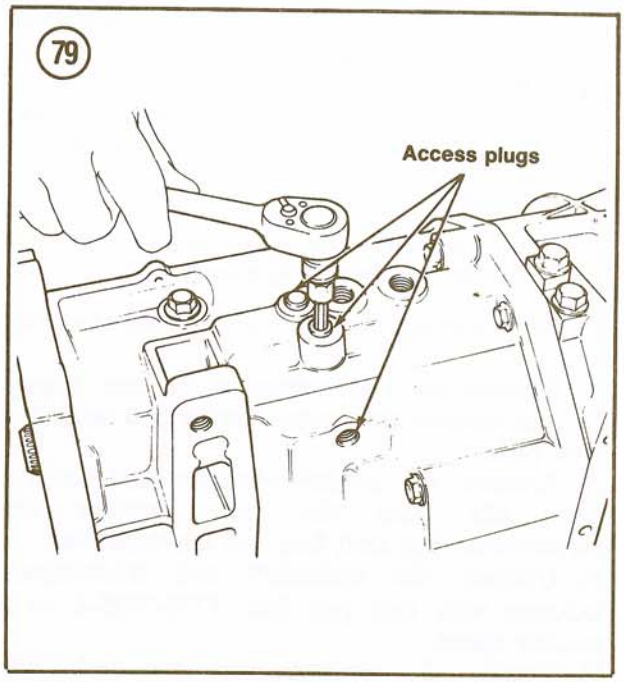

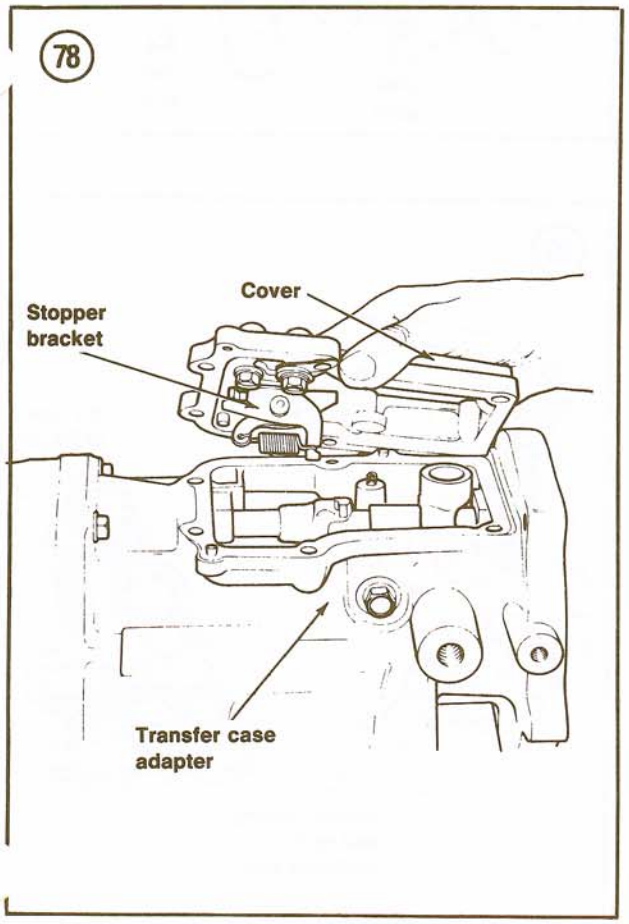

7. Unbolt and remove the transfer case adapter cover with stopper bracket (**Figure 78**). Discard the gasket.
8. Remove the detent spring and ball from the adapter.
9. Remove the 3 roll pin access plugs from the transfer case adapter with a 6 mm Allen-head wrench. See **Figure 79**.
10. Insert a suitable pin punch in each access hole and drive the roll pin from the corresponding shift gate.

NOTE

The neutral return plunger removed in Step 11 has a detent ball slot in the center; the one removed in Step 12 does not.

11. Remove the detent bolt on the right side of the transfer case adapter. Remove the spring and neutral return plunger.
12. Remove the detent bolt on the left side of the transfer case adapter. Remove the spring and neutral return plunger.
13. Lift the gate selector lever (**Figure 80**) from the shift gates and move the lever as far to the rear as possible to provide clearance for adapter removal.
14. Unbolt and remove the transfer case adapter from the transmission case. Note the 3 different size bolts used and mark each for correct reinstallation. Discard the gasket.

15. Tag each shift rail and gate for reinstallation reference. Remove the gates from the rails. See **Figure 81**.
16. Drive out the roll pins holding the 1st/2nd and 3rd/4th shift forks to their respective shift rails.

NOTE

It is not necessary to remove the switch actuator roll pin for transmission disassembly.

17. Drive out the overdrive/reverse shift fork roll pin.
18. Remove the 3 set screws on the case (**Figure 82**) and remove the poppet spring and steel ball from each.
19. Remove the overdrive/reverse and 3rd/4th shift rails from the case. Remove the overdrive/reverse shift fork and interlock pins.
20. Unstake the mainshaft and countershaft locknuts with tool part No. T77J-7025-F or a suitable chisel.
21. Engage 2 synchronizers to lock the transmission in 2 gears. Remove the countershaft locknut with a 30 mm socket. Remove the mainshaft locknut with locknut wrench part No. T77J-7025-C. Discard both locknuts.
22. Assemble bearing puller tools part No. T77J-7025-J, T77J-7025-H and T84T-7025-B on remover/replacer tool part No. T75L-7025-B as shown in **Figure 83**. Remove the mainshaft rear bearing, spacer and lockball.

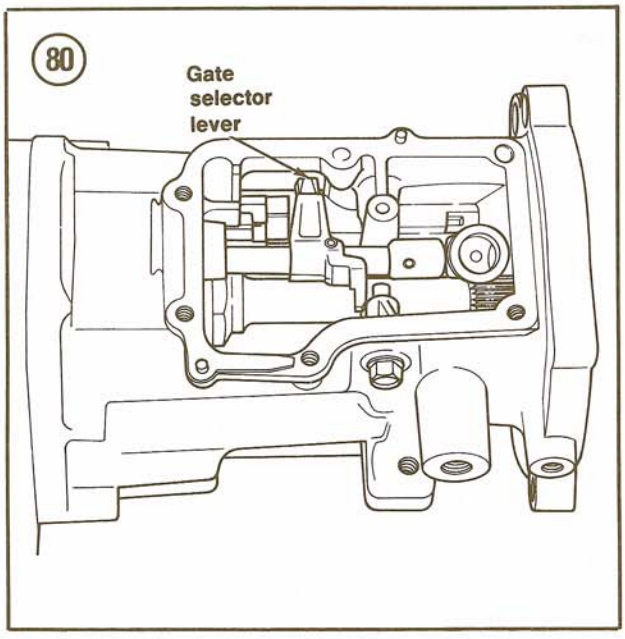

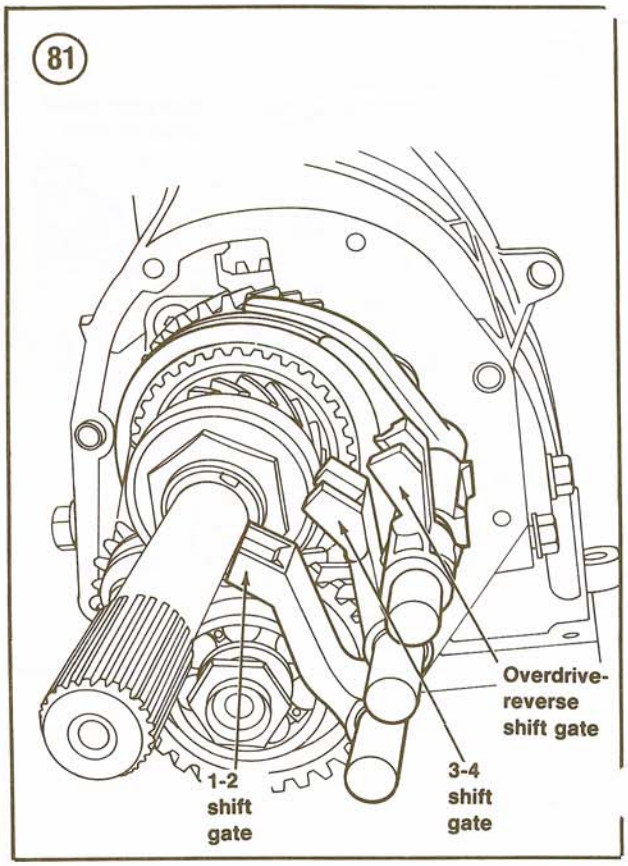

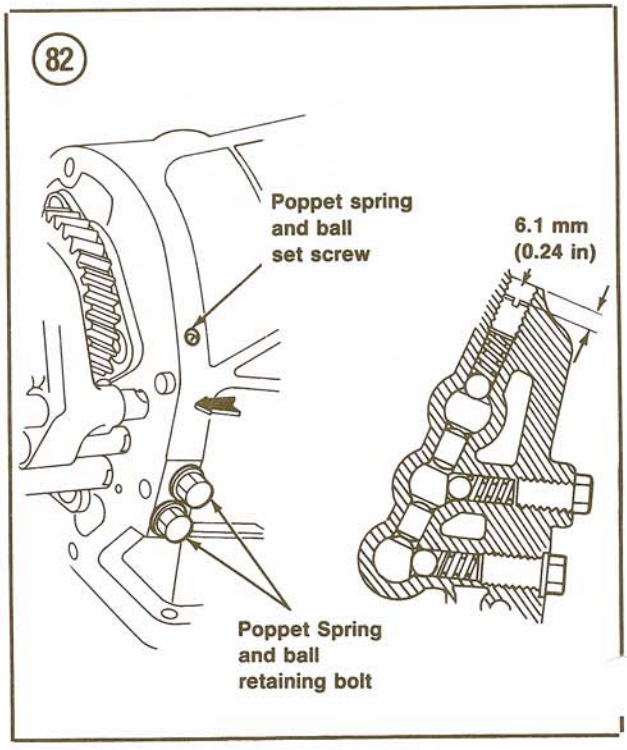

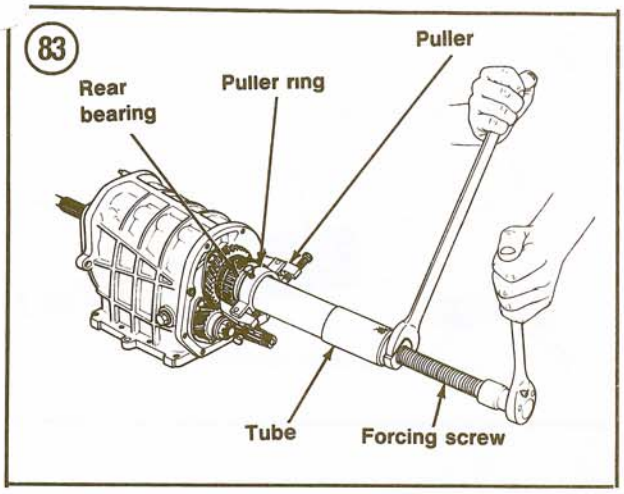

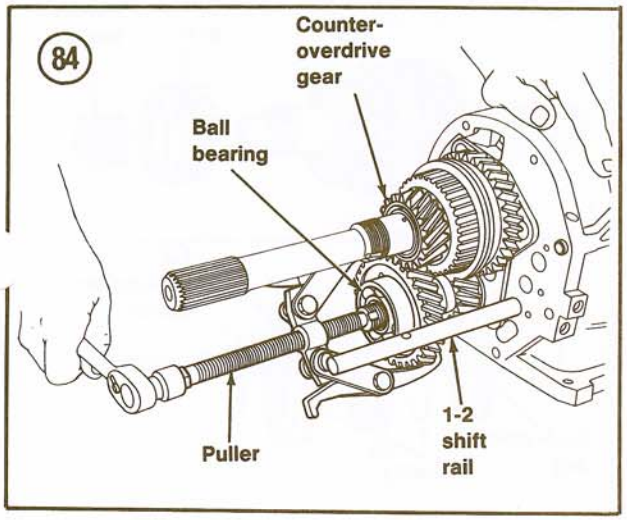

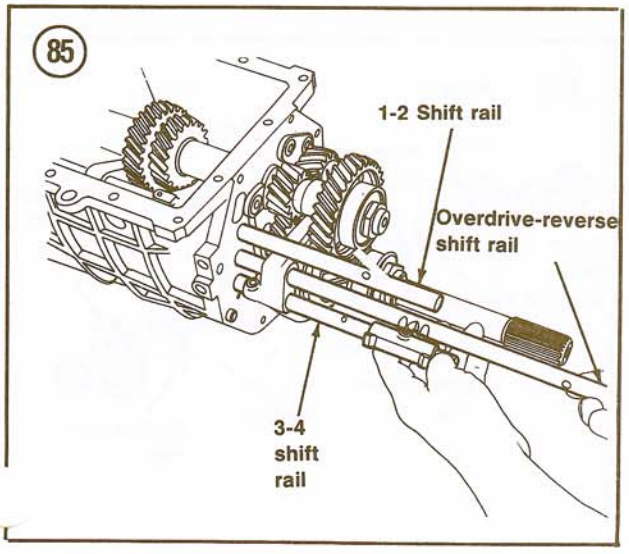

23. Install puller part No. T77F-4220-B as shown in **Figure 84**. Make sure the puller jaws are properly seated behind the gear.
24. Remove the 1st/2nd shift rail, 1st/2nd shift fork and 3rd/4th shift fork from the transmission case.
25. Remove the overdrive gear, needle bearing, spacer and synchro ring from the mainshaft. See **Figure 85**.
26. Repeat Step 22 to remove the overdrive synchro hub and bearing sleeve from the mainshaft. Slide the reverse gear and needle bearing off the mainshaft.
27. Remove the counter reverse gear and spacer from the countershaft.
28. Remove the cotter pin and castellated nut from the reverse idler shaft. Remove the thrust washer, reverse idler gear and 2 caged needle bearings (**Figure 86**).
29. Unbolt the bearing retainer from the case with a 6 mm Allen-head wrench. Discard the gasket.
30. Attach a slide hammer to reverse idler gear shaft remover part No. T85T-7140-A and remove the reverse idler gear shaft from the transmission case.
31. Remove the 4 front bearing retainer studs by threading a pair of suitable nuts on each stud and removing with a wrench, then remove the 4 bearing retainer bolts. Remove the retainer, gasket and shim. Discard the gasket.

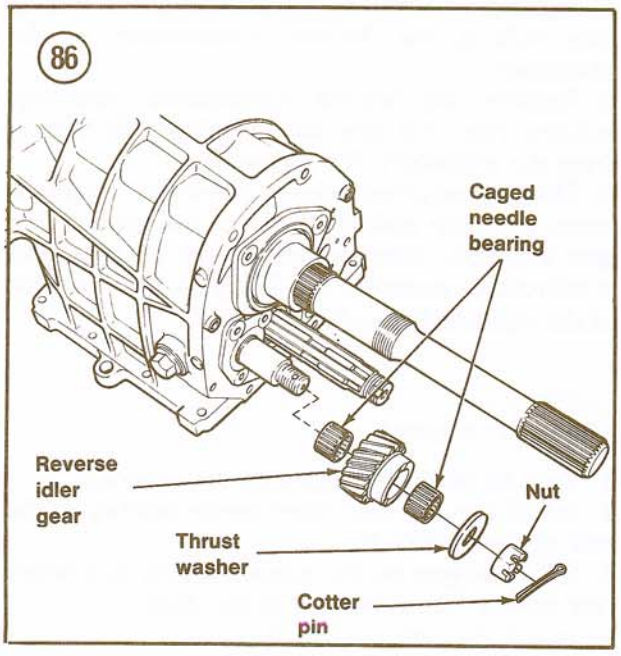

32. Expand, remove and save the input shaft inner selective snap ring, then expand, remove and discard the outer snap ring.
33. Rotate the input shaft until one of its flats faces the countershaft, then remove the input shaft from the transmission case. Remove the caged needle bearing from the input gear or front of the mainshaft.
34. Expand and remove the mainshaft outer bearing race snap ring.
35. Assemble remover tube part No. T75L-7025-B, mainshaft bearing collet remover part No. T85T-7065-A, forcing screw part No. T85L-7025-B and bearing collet sleeve part No. T77F-7025-C as shown in **Figure 87**. Turn the forcing screw to remove the outer mainshaft bearing race, bearing and sleeve from the transmission case (the inner bearing race will remain on the mainshaft).
36. Remove the countershaft front spacer and bearing race.
37. Move the mainshaft assembly to one side enough to permit removal of the countershaft. Remove the countershaft from the transmission case.
38. Remove the mainshaft from the transmission case.

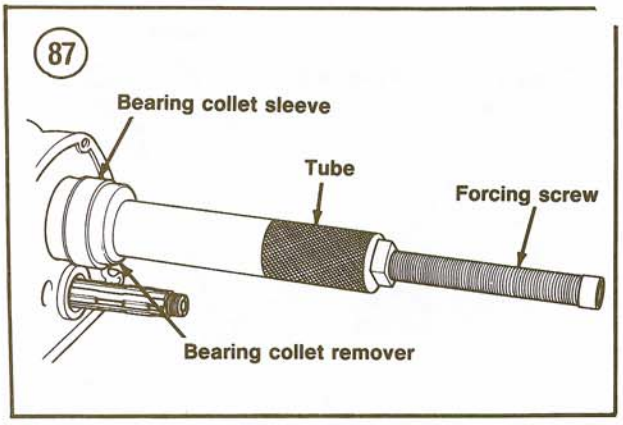

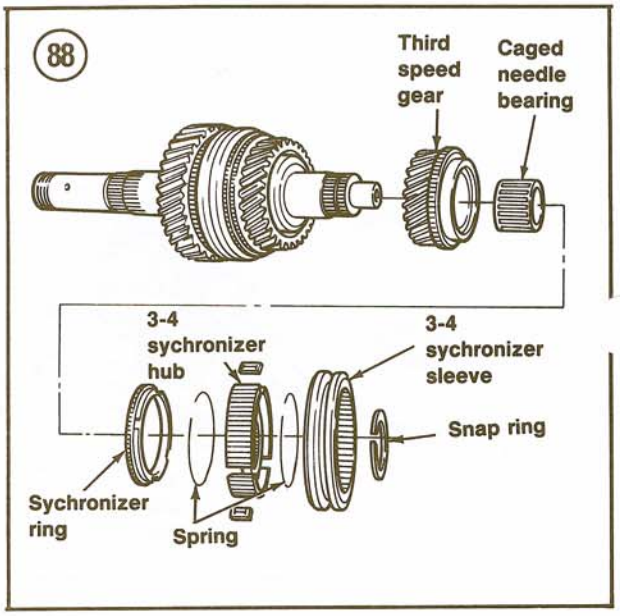

Mainshaft Disassembly

1. Expand, remove and discard the selective snap ring holding the 3rd/4th synchronizer to the mainshaft.
2. Remove the 3rd/4th synchronizer assembly, synchro ring, 3rd gear and caged needle bearing from the mainshaft. See **Figure 88**.
3. Using a universal bearing puller and hydraulic press, press the mainshaft free of the 1st and 2nd gear assembly, then remove the 1st gear, 1st/2nd synchronizer assembly and 2nd gear from the rear of the mainshaft. See **Figure 89**.

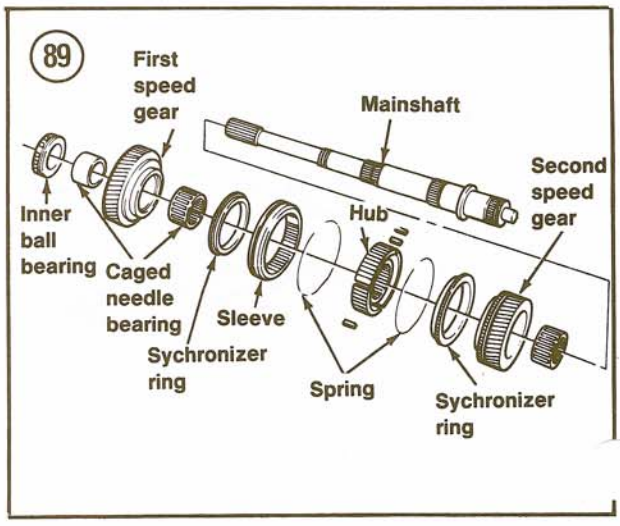

Mainshaft Assembly

1. Coat all parts with transmission lubricant.
2. Install the 2nd gear caged needle bearing on the rear of the mainshaft.
3. Slide 2nd gear on the mainshaft with its synchro ring surface facing the rear of the shaft.
4. Install the 2nd gear synchro ring.

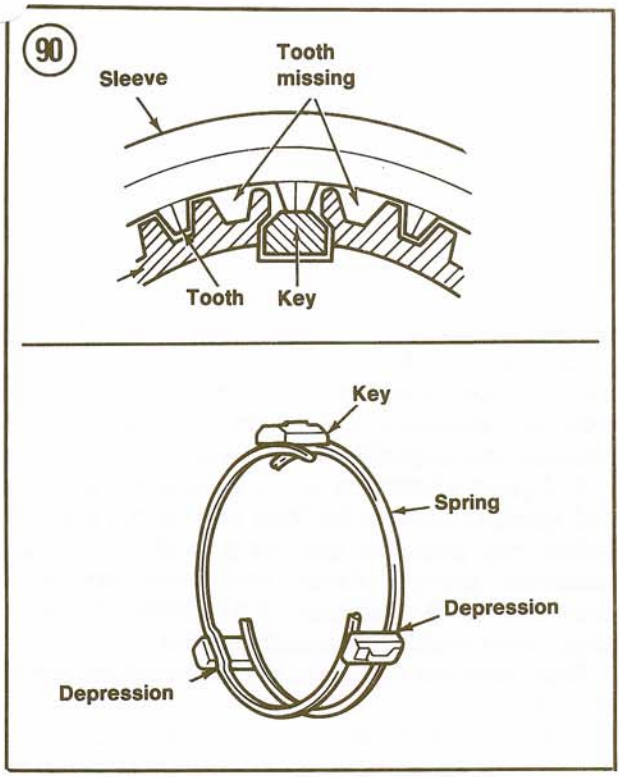

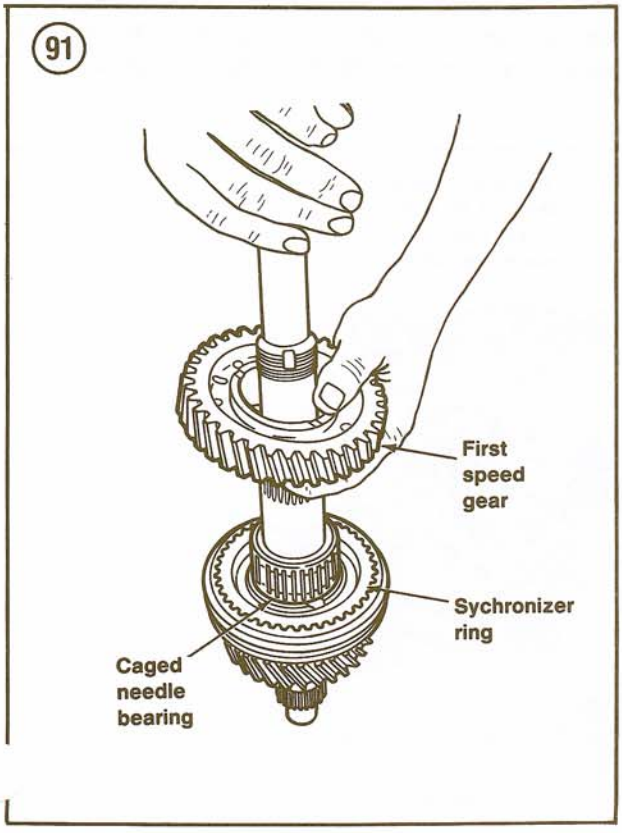

NOTE

If the synchronizer assembly was disassembled, reassemble so the synchro keys will fit into those areas where teeth are missing on the sleeve. The springs and keys should be assembled so that the open ends of the springs are not facing each other. See ***Figure 90****.*

5. Install the 1st/2nd gear synchronizer assembly. The rear surface ridge must face the rear of the mainshaft and the large beveled edge must face to the front. Seat in place on the shaft using replacing shaft sleeve part No. T75L-7025-K, shaft collar part No. T75L-7025-M and tube part No. T75L-7025-C. When correctly installed, 2nd gear should rotate freely.
6. Slide 1st gear bearing sleeve on the mainshaft and press in place using replacing shaft sleeve part No. T75L-7025-K, shaft collar part No. T75L-7025-M, rack bushing holder part No.T81P-3504-D (or a suitable washer) and tube part No. T75L-7025-C. When correctly installed, the bearing sleeve should rotate freely.
7. Install the 1st/2nd synchro ring on the 1st/2nd synchronizer assembly, then slide the caged needle bearing and 1st gear on the shaft (**Figure 91**).
8. Slide the inner ball bearing on the mainshaft and press in place using replacing shaft sleeve part No. T75L-7025-K, shaft collar part No. T75L-7025-M, rack bushing holder part No. T81P-3504-D (or a suitable washer) and tube part No. T75L-7025-C. When correctly installed, the gears should rotate freely.
9. Install the 3rd gear caged needle bearing, 3rd gear and the 3rd gear synchro ring on the mainshaft.

NOTE

If the synchronizer assembly was disassembled, reassemble so the synchro keys will fit into those areas where teeth are missing on the sleeve. The springs and keys should be assembled so that the open ends of the springs are not facing each other. See ***Figure 90****.*

10. Install the 3rd/4th gear synchronizer assembly on the front of the mainshaft. The small diameter hub boss and small bevel angle of the sleeve should face the front of the shaft.
11. Install the thickest new selective snap ring that will fit into the mainshaft groove.

Countershaft and Input Shaft Disassembly/Assembly

Both the countershaft and input shaft are serviced as an assembly. Only the ball bearings can be serviced separately. If bearing replacement is required, press the bearing(s) off the shaft and discard. Used bearings cannot be reinstalled. Press new bearings in place.

Transmission Assembly

Assembly is the reverse of disassembly, plus the following:

1. Install the thickest new selective snap ring in front of the input shaft bearing that will fit in the groove.
2. Check countershaft end play by positioning the transmission case upright, depressing the countershaft until it bottoms against the front bearing retainer and installing the rear selective spacer. Place a straightedge across the spacer in the case and measure the clearance with a flat feeler gauge. It should be 0.000-0.002 in. (0.00-0.05 mm). Install a new selective spacer as required to bring the clearance within specifications.
3. Install a new cotter pin in the reverse idler gear locknut and cut one end of the pin when bent over to prevent it from interfering with the counter overdrive gear.
4. Install new countershaft and mainshaft locknuts.
5. Tighten all fasteners to specifications (**Table 1**).

TRANSFER CASE

The transfer case directs the power from the engine and transmission to the front and rear driving axles of 4-wheel drive vehicles as desired.

This section covers the Borg Warner 13-50 part-time transfer case used on 1984 and later models and the Borg Warner 13-50 electronic shift transfer case used on 1986 models. Refer to *Manual Transmission* for safety precautions and cleaning and inspection procedures.

A 3-piece aluminum housing contains a chain and sprocket drive to the front axle output shaft. A locked ring planetary gear set provides low-range reduction gearing. Range and mode are both controlled on the standard 13-50 transfer case by a single lever which is manually shifted.

Both units use a positive displacement oil pump that turns with the rear output shaft, allowing the vehicle to be towed at maximum legal road speeds for extended distances without disconnecting either drive shaft.

A transfer case identification number is stamped on the rear cover right mounting ear. This number should be used for ordering replacement parts.

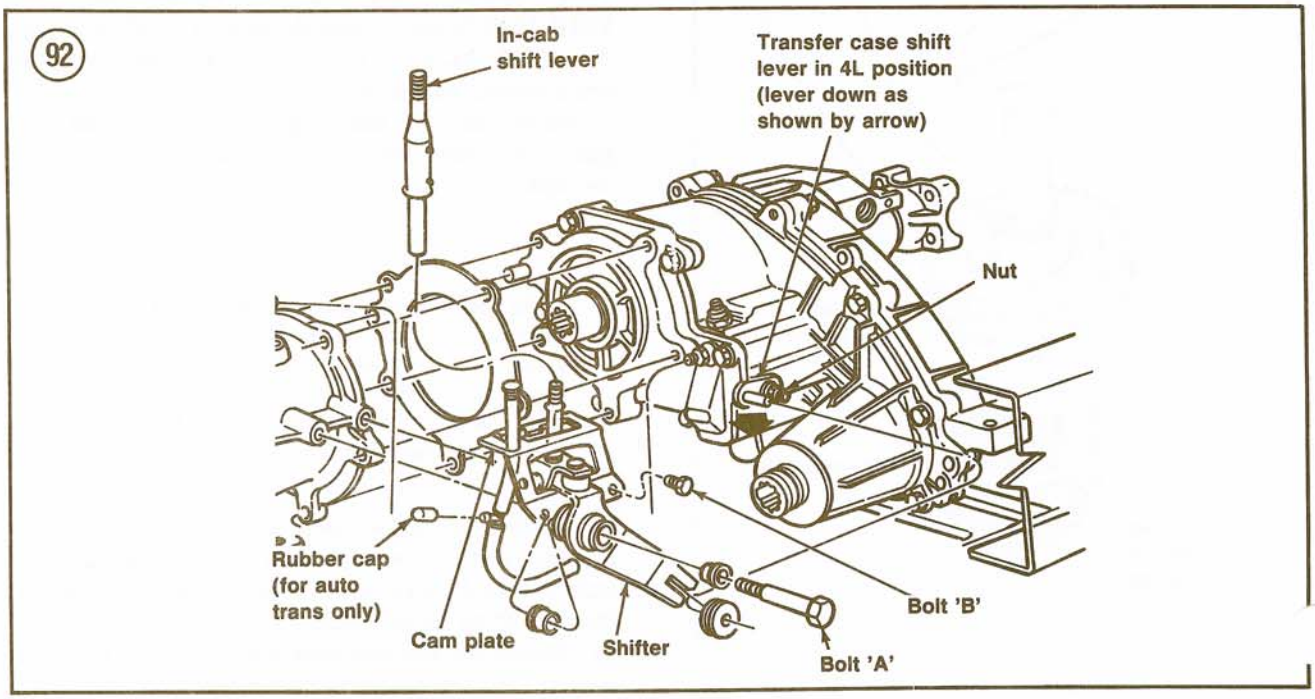

BORG WARNER 13-50 TRANSFER CASE

Linkage Adjustment

Refer to **Figure 92** for this procedure.

1. Securely block both front wheels so the truck will not roll in either direction. Raise the rear of the vehicle with a jack and place it on jackstands.
2. Pull the shift boot up to expose the top of the cam plate.
3. Loosen bolts "A" and "B," then retighten finger-tight.
4. Move the transfer case shift lever to the "4L" position. See arrow, **Figure 92.**
5. Move the cam plate to the rear until the bottom chamfered corner of the neutral lug touches the front right edge of the shift lever. Hold the cam plate in this position and tighten bolt "A" to 70-90 ft.-lb. (94-122 N•m).
6. Tighten bolt "B" to 31-42 ft.-lb. (43-56 N•m).
7. Move the transfer case shift lever in the cab through all positions to check for positive engagement.
8. Pull the shift boot back into place. Remove the jackstands and lower the vehicle to the ground.

Removal/Installation

1. Raise the vehicle with a jack and place it on jackstands.
2. Unbolt and remove the skid plate, if so equipped.
3. Place a suitable container under the transfer case. Remove the drain plug and drain the lubricant, then reinstall the drain plug.
4. Unplug the 4-wheel drive indicator switch at the transfer case.
5. Scribe match marks on the front drive shaft flange and axle input yoke. Disconnect the front drive shaft. See Chapter Eleven.
6. Unclamp the front drive shaft boot at the transfer case. Withdraw the drive shaft and boot assembly from the transfer case front output shaft.
7. Scribe match marks on the rear drive shaft flange and transfer case output shaft yoke. Disconnect the rear drive shaft. See Chapter Eleven.
8. Disconnect the speedometer cable at the transfer case rear cover.
9. Disconnect the vent hose at the control lever.
10. Loosen the large and small bolts holding the shifter to the adapter. Pull upward on the control lever until the bushing slides off the shift lever pin and remove from the vehicle.

WARNING

The exhaust system is extremly hot under normal operating conditions. To avoid the possibility of a bad burn, it is advisable to work on the system only when it is cool. Be especially careful around the catalytic converter. It reaches temperatures of 600° F or greater after only a brief period of engine operation.

11. Remove the transfer case heat shield.
12. Position a transmission jack under the transfer case. Secure the case to the jack with a chain.
13. Unbolt the transfer case from the adapter.
14. Pull the transfer case to the rear until it clears the transmission output shaft and adapter.
15. Lower the transfer case to the floor with the jack and remove it from under the vehicle. Discard the gasket.

WARNING

The transfer case is extremely heavy for its size and awkward to handle. Trying to lift or move the unit without the help of a jack and chain fall can cause serious personal injury.

16. Remove the transfer case from the jack with a chain fall and place on a suitable work bench.
17. Installation is the reverse of removal, plus the following:
    a. Use a new transfer case-to-adapter gasket.
    b. Apply a small amount of multipurpose lubricant (part No. C1AZ-19590-B) to the transfer case front output shaft splines.
    c. Tighten all fasteners to specifications (**Table 1**).
    d. Fill the transfer case to the proper level with the recommended lubricant. See Chapter Three.
    e. If the transfer case has been overhauled, allow at least one hour for RTV sealant to cure before operating the vehicle.
    f. Adjust the shift linkage as described in this chapter.
    g. Test drive the vehicle and shift the transfer case through its range to check for proper operation.

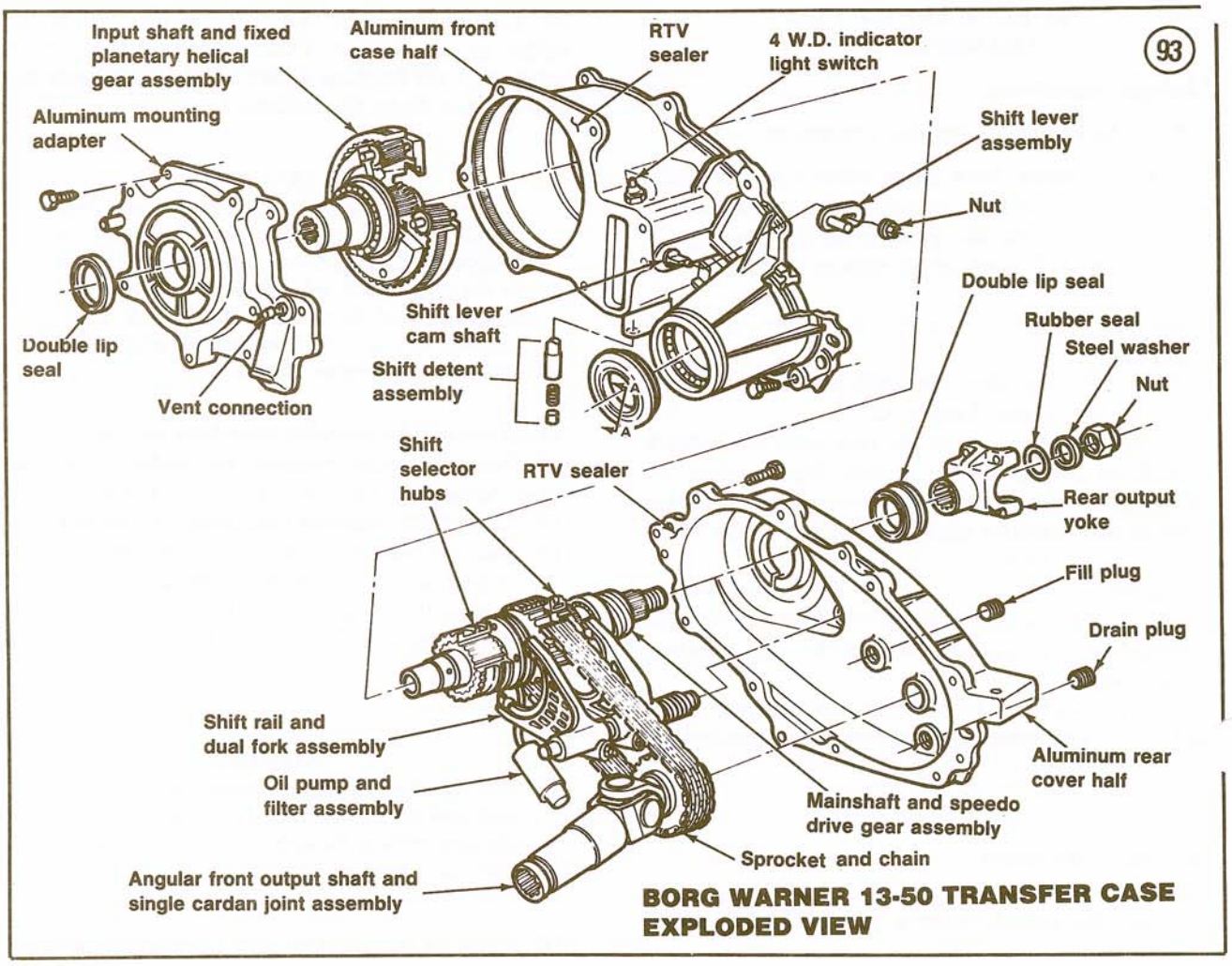

Transfer Case Disassembly

This procedure separates the transfer case into its basic sub-assemblies. When the procedure has been completed, inspect the various sub-assemblies to determine which are malfunctioning and disassemble only the one(s) which require service. Refer to **Figure 93** for this procedure.

1. Clean all dirt and grease from the outside of the transfer case.
2. Remove the 4-wheel drive indicator switch and breather vent.
3. Use a flange holding tool and loosen the 30 mm nut on the rear output shaft. Remove the nut, steel washer and rubber seal from the shaft. Remove the rear yoke.
4. Remove the bolts holding the 2 case halves together.

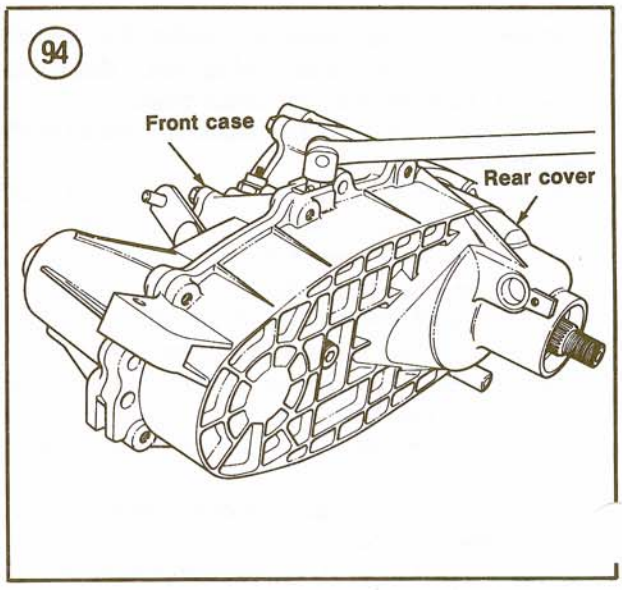

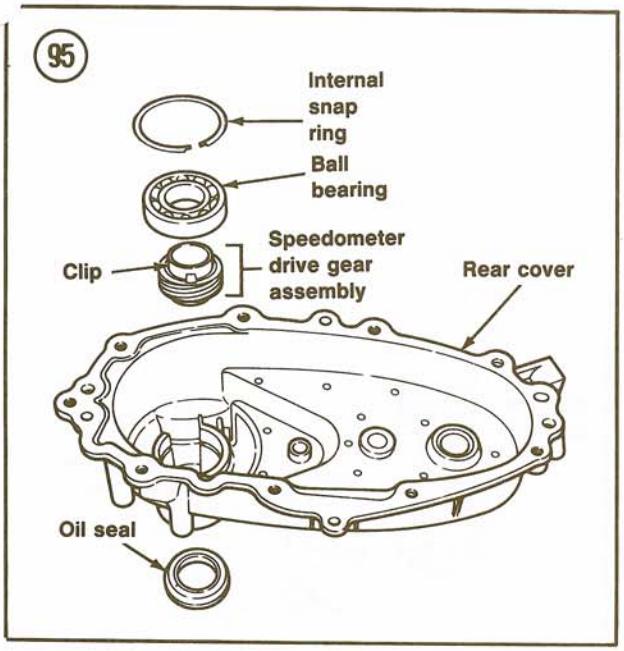

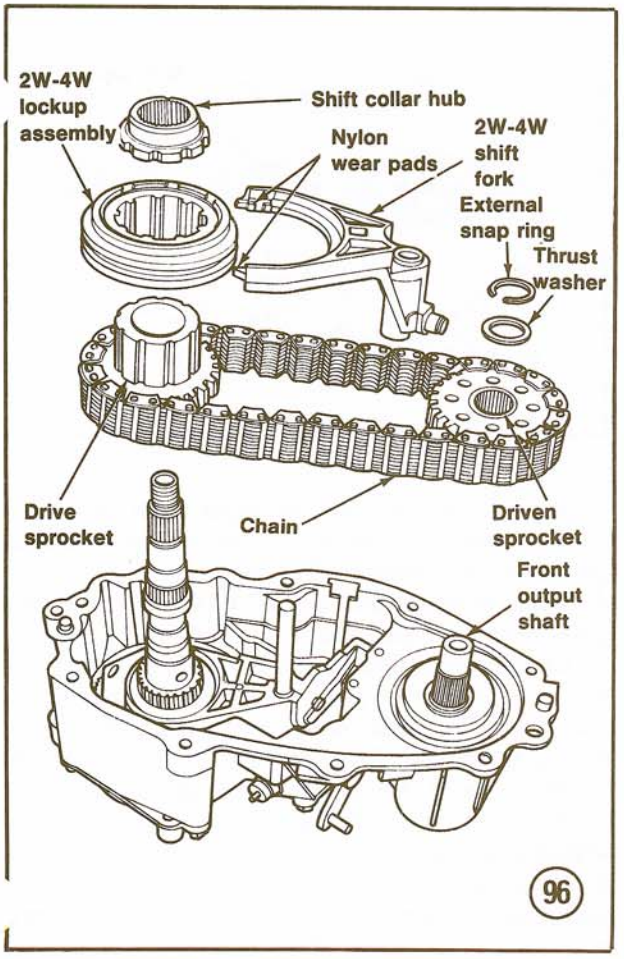

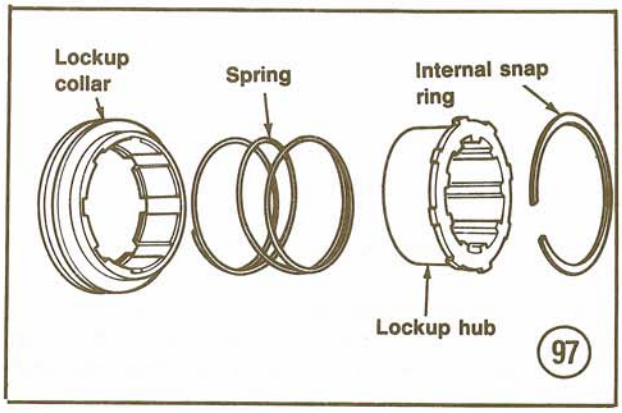

5. Pry the case halves apart by inserting a suitable flat-bladed screwdriver in the housing pry slots (**Figure 94**). Separate the case halves.
6. If the speedometer drive gear or ball bearing requires replacement:
   a. Drive the output shaft oil seal out with a brass drift and hammer. Discard the seal.
   b. Remove the speedometer drive gear, clip and spacer (**Figure 95**).
   c. Compress and remove the internal snap ring holding the rear output shaft ball bearing in the case.
   d. Support the case and drive the bearing out with replacer part No. T83T-7025-B or equivalent and a drive handle.
7. If the front output shaft caged needle bearing requires replacement, attach a slide hammer to puller collet part No. D80L-100-S and remove the bearing.
8. Remove the large 2W-4W shift fork spring. It may be located on the rear cover boss or in the front cover assembly.
9. Refer to **Figure 96** and remove the shift collar hub from the output shaft, then remove the lockup assembly and shift fork from the front case as a unit. Separate the lockup assembly and shift fork after removal. Do not lose the nylon wear pads on the fork tips.
10. If disassembly of the lockup assembly is necessary, compress the internal snap ring and remove the lockup hub and spring from the lockup collar. See **Figure 97**.
11. Expand and remove the snap ring and thrust washer holding the driven sprocket to the front output shaft. See **Figure 96**.
12. Grasp the chain and both sprockets. Pull the chain and sprockets straight off the output shafts as an assembly.

13. Remove the output shaft and oil pump as an assembly.
14. Refer to **Figure 98** and:
    a. Remove the magnet from the case notch.
    b. Withdraw the shift rail.
    c. Remove the high-low range shift fork. Do not lose the nylon wear pads on the fork tips.
    d. Remove the high-low shift hub from the front case planetary gearset.
    e. Push/pull the anchor end of the assist spring from its locking post in the front case. Remove the spring and roller from the shift cam.
15. Refer to **Figure 99** and:
    a. Compress and remove the large internal snap ring.
    b. Rap on the front output shaft/U-joint assembly face with a soft-faced hammer to free the bearing retainer. Remove the retainer.
    c. If bearing replacement is required, compress and remove the small internal snap ring from the retainer. Drive bearing from retainer with bearing replacer part No. T83T-7025-B and a suitable driver handle.
    d. Remove the front output shaft/U-joint assembly from the case.
    e. If oil seal requires replacement, attach a slide hammer to remover part No. 1175-AC and remove the seal. Install a new one with a suitable installer.
    f. If U-joint requires replacement, see Chapter Twelve.
16. Invert the front case half and unbolt the adapter. Remove the adapter, input shaft and planetary gear set as an assembly. See **Figure 100**.
17. Clean and inspect all components as described under *Manual Transmission, Cleaning and Inspection, Transmission and Transfer Case* in this chapter.

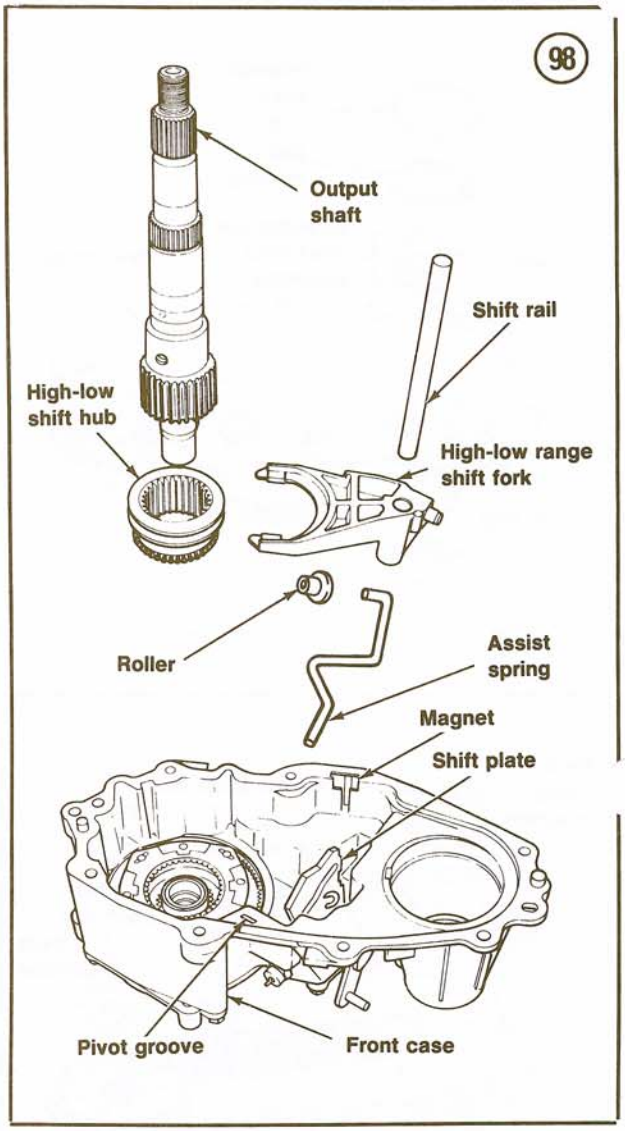

Planetary Gear Set
Disassembly/Assembly

Refer to **Figure 100** for this procedure.

1. Expand the large snap ring tangs in the mounting adapter and pry under the planetary gear set with screwdrivers to separate the input shaft and planetary gear set from the adapter.
2. Compress and remove the planetary carrier internal snap ring, then separate the gear set from the input shaft.
3. Expand and remove the input shaft snap ring. Remove the input shaft bearing with a hydraulic press and universal bearing puller.
4. Remove the thrust washer, thrust plate and sun gear from the input shaft.
5. Clean and inspect all components.
6. Install the sun gear, thrust plate and thrust washer on the input shaft. The recessed face of the sun gear should face the rear of the case; the stepped face of the thrust washer should face out.
7. Press the ball bearing on the input shaft and install a new snap ring.
8. Mate the planetary gear set to the sun gear and input shaft assembly, then install a new internal snap ring in the planetary carrier.

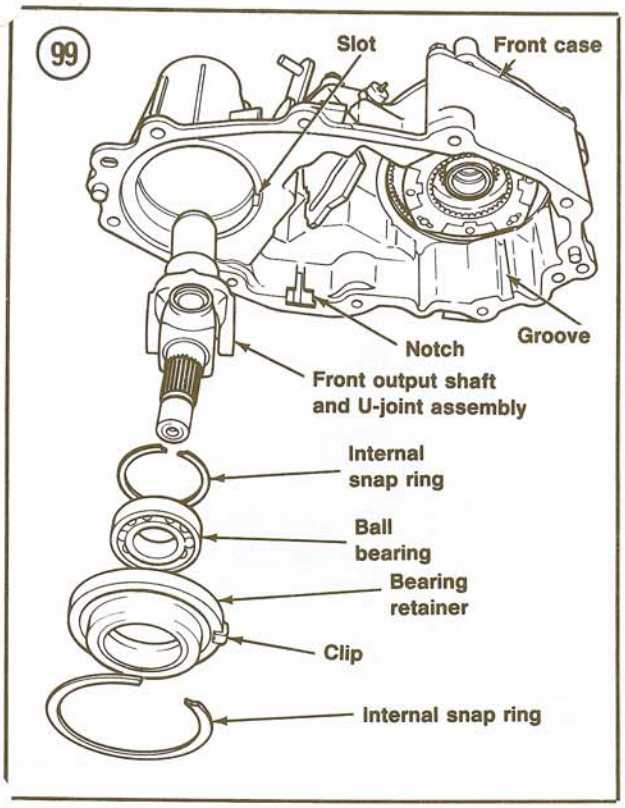

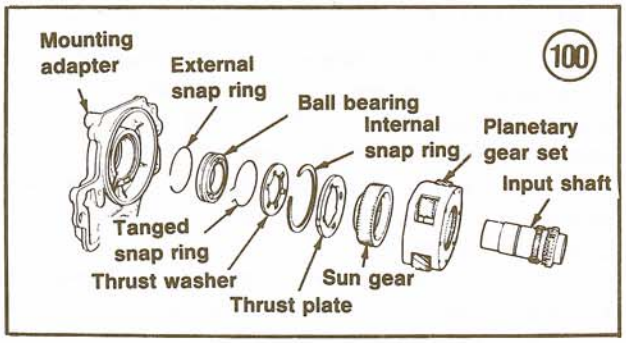

9. If the mounting adapter oil seal requires replacement, remove it with a slide hammer and remover part No. 1175-AC. Install a new seal in the adapter bore with installer part No. T83T-7065-A and a suitable driver handle.

10. Fit the tanged snap ring in the adapter groove. Locate the input shaft/planetary assembly in the adapter and push down until they seat fully, causing the snap ring to engage the assembly. To check snap ring engagement, hold adapter and rap the input shaft face against a soft wooden block. It should not come free if snap ring is properly engaged.

Transfer Case Assembly

Refer to **Figure 93** for this procedure.

1. Lubricate all components with DEXRON II automatic transmission fluid.
2. Make sure that all RTV gasket sealant residue has been removed from the case mating flanges.
3. Refer to **Figure 99** and:
   a. If bearing was removed from retainer, install a new bearing with replacer part No. T83T-7025-B and a suitable driver. Install the small internal snap ring in the retainer.
   b. Insert the front output shaft/U-joint assembly in the front case. Fit the bearing retainer over the shaft and align the retainer clip with the case slot. Seat the retainer by tapping lightly with a soft-faced hammer, then install the large internal snap ring.
4. Run a thin bead of RTV sealant (part No. D6AZ-19562-A or -B) along the mounting adapter mating surfaces on the front case. Install the mounting adapter and tighten the bolts to specifications (**Table 1**).
5. Fit the roller on the bent end of the assist spring (**Figure 98**). Insert the roller into the assist spring roller track on the shift cam. At the same time, position the center of the spring in the front case pivot groove. Push the anchor end of the torsion spring behind the locking post next to the ring gear face.
6. Install the high-low shift hub in the planetary gear set. Fit the high-low shift fork bushing into the shift cam roller track, engaging the fork pads in the high-low hub groove.
7. Insert the shift rail into the high-low fork and seat in the front case bore.
8. Install the output shaft/oil pump assembly. The outer splines of the shaft must engage the inner splines of the high-low shift hub. The pump retainer and oil filter leg must fit into the case groove and notch respectively.
9. Install the magnet in the case groove.
10. Assemble the chain to the drive and driven sprockets. Grasp the assembly and install in the case.
11. Install the front output shaft thrust washer, then install a new snap ring to hold the driven sprocket in place.
12. If the 2W-4W lockup assembly was disassembled, refer to **Figure 97** and:
    a. Insert the spring in the lockup collar.
    b. Fit the lockup hub over the spring, then engage the lockup hub in the collar notches.

c. Install the internal snap ring to hold the hub to the collar.

13. Install the 2W-4W shift fork on the lockup assembly. Fit the fork/lockup assembly on the output shaft and engage the fork with the shift rail.
14. Install the shift collar hub on the output shaft.
15. If the rear cover caged needle bearing was removed, install a new one with bearing replacer part No. T83T-7127-A and a suitable driver handle.
16. If the rear cover ball bearing was removed, drive a new one in place with bearing replacer part No. T83T-7025-B and a suitable driver. When bearing is properly seated, install the internal snap ring.
17. If the speedometer drive gear was removed from the rear cover, refer to **Figure 95** and position the round end of the gear clip towards the cover.
18. If the rear cover oil seal was removed, install a new one with installer part No. T83T-7065-B and a suitable driver handle.
19. Move the transfer case shift lever to the "4H" detent position.
20. Run a thin bead of RTV sealant (part No. D6AZ-19562-A or -B) along the front case mating surfaces.
21. Install the 2W-4W shift fork spring on the shift rail and fork as shown in **Figure 101**.
22. Align the rear cover with the front cover. Lower the rear cover onto the front cover, making sure the shift fork spring engages the rear cover spring boss. If the covers do not seem to mate properly, the shift rail has not entered its hole in the rear cover boss. To correct, wiggle the rear cover slightly until the rail engages the boss.
23. Install and tighten the cover attaching bolts to specifications (**Table 1**).
24. Install the rear yoke on the output shaft. Slide the rubber seal and washer on the shaft. Thread the nut in place and use a holding tool to prevent the yoke from moving while the nut is tightened to specifications (**Table 1**).
25. Install and tighten the 4-wheel drive indicator switch to specifications (**Table 1**).
26. Install the breather and drain plugs. Tighten both to specifications (**Table 1**).
27. Remove the fill plug and fill the transfer case with the appropriate amount of DEXRON II automatic transmission fluid. See Chapter Three. Reinstall and tighten the fill plug to specifications (**Table 1**).
28. Install the transfer case as described in this chapter.

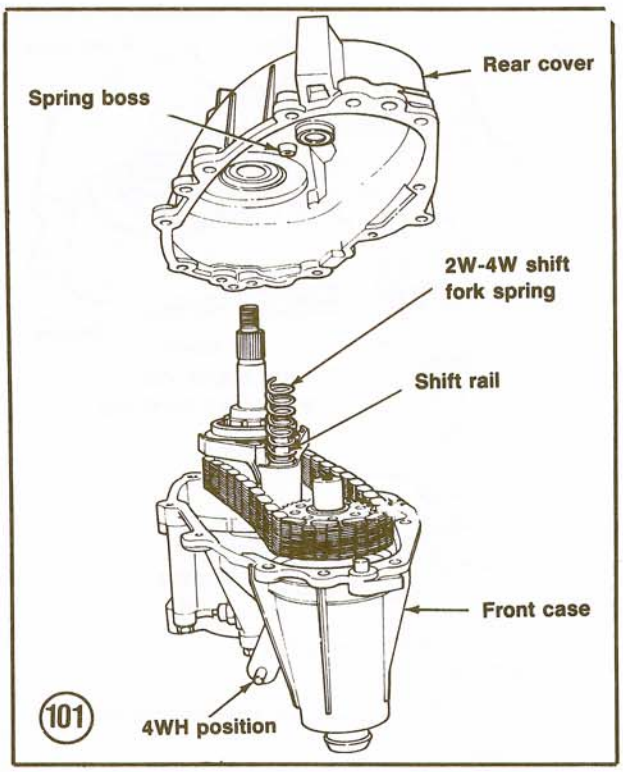

BORG WARNER 13-50 ELECTRONIC SHIFT TRANSFER CASE

The 1986 Borg Warner 13-50 transfer case incorporates electronic "Touch Drive" which allows shifting between 2H and 4H at any vehicle speed. Shifts between 4H and 4L must be made with the vehicle stopped and the transmission shifted to NEUTRAL (automatic) or the clutch disengaged (manual).

Basically, the system works as follows: A magnetic clutch inside the transfer case next to the 2W-4W shift collar speeds up the entire front drive system from zero to vehicle speed in a fraction of a second. This speed-up engages the front axle locking hubs. Once the front and rear transfer case output shafts reach the same speed, the spring-loaded shift collar engages the mainshaft hub to the chain drive sprocket and deactivates the magnetic clutch.

An electric motor-driven worm gear mounted on the outside rear of the transfer case (**Figure 102**) drives a rotary helical cam at the 2W-4W shift fork and 4H-4L reduction fork to allow pushbutton control of the system from an overhead console which replaces the conventional floor-mounte shift lever.

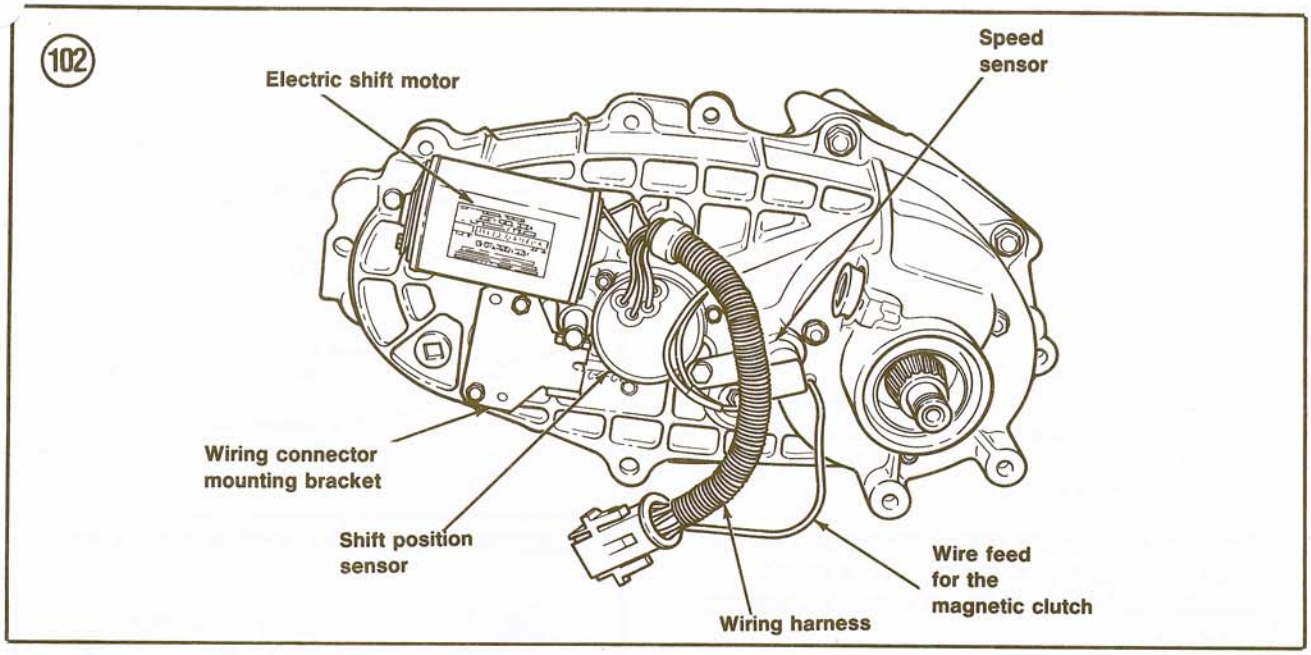

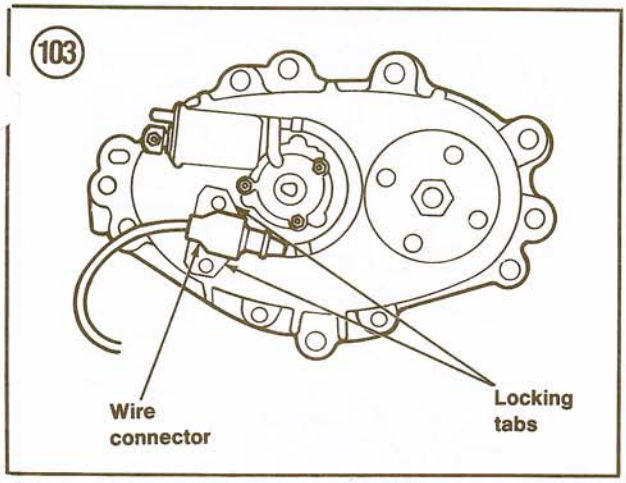

If the "Touch Drive" system does not operate properly or operates improperly, an electrical problem could be present in the overhead console, electronic control module, speed sensor, electric shift motor, electromagnetic clutch assembly or the interconnecting wiring. Electrical troubleshooting is best left to a Ford dealer.

This section includes removal/installation and mechanical overhaul of the transfer case.

Removal/Installation

. Raise the vehicle with a jack and place it on jackstands.

2. Unbolt and remove the skid plate, if so equipped.
3. Place a suitable container under the transfer case. Remove the drain plug and drain the lubricant, then reinstall the drain plug.
4. Squeeze the feed wire harness locking tabs at the rear of the transfer case and unplug the connectors. See **Figure 103**.
5. Scribe match marks on the front drive shaft flange and axle input yoke. Disconnect the front drive shaft. See Chapter Eleven.
6. Unclamp the front drive shaft boot at the transfer case. Withdraw the drive shaft and boot assembly from the transfer case front output shaft.
7. Scribe match marks on the rear drive shaft flange and transfer case output shaft yoke. Disconnect the rear drive shaft. See Chapter Eleven.
8. Disconnect the speedometer cable at the transfer case rear cover.
9. Disconnect the vent hose at the mounting bracket.

WARNING

The exhaust system is extremely hot under normal operating conditions. To avoid the possibility of a bad burn, it is advisable to work on the system only when it is cool. Be especially careful around the catalytic converter. It reaches temperatures of 600° F or greater after only a brief period of engine operation.

10. Remove the transfer case heat shield, if so equipped.
11. Position a transmission jack under the transfer case. Secure the case to the jack with a chain.
12. Unbolt the transfer case from the adapter.
13. Pull the transfer case to the rear until it clears the transmission output shaft and adapter.
14. Lower the transfer case to the floor with the jack and remove it from under the vehicle. Discard the gasket.

WARNING

The transfer case is extremely heavy for its size and awkward to handle. Trying to lift or move the unit without the help of a jack and chain fall can cause serious personal injury.

15. Remove the transfer case from the jack with a chain fall and place on a suitable work bench.
16. Installation is the reverse of removal, plus the following:
    a. Use a new transfer case-to-adapter gasket.
    b. Apply a small amount of multipurpose lubricant (part No. C1AZ-19590-B) to the transfer case front output shaft splines.
    c. Tighten all fasteners to specifications (**Table 1**).
    d. Fill the transfer case to the proper level with the recommended lubricant. See Chapter Three.
    e. If the transfer case has been overhauled, allow at least one hour for RTV sealant to cure before operating the vehicle.
    f. Test drive the vehicle and shift the transfer case through its range to check for proper operation.

Transfer Case Disassembly

This procedure separates the transfer case into its basic sub-assemblies. When the procedure has been completed, inspect the various sub-assemblies to determine which are malfunctioning and disassemble only the one(s) which require service. Refer to **Figure 104** (on page 318) for this procedure.
1. Clean all dirt and grease from the outside of the transfer case.
2. Use a flange holding tool and loosen the 30 mm nut on the rear output shaft. Remove the nut, steel washer and rubber seal from the shaft. See **Figure 105**. Remove the rear yoke.
3. Unbolt and remove the wire connector assembly and bracket from the rear cover. Bend a hook in the end of a paper clip and use it to disengage the locking sleeve in the wire connector, then carefully pull the brown, green and blue wires from the connector.
4. Unbolt the speed sensor bracket and remove the sensor assembly (**Figure 106**).
5. Unbolt and remove the electric motor from the rear cover (**Figure 107**). The rear cover shaft and motor slot are triangular in shape and must be properly mated when the motor is reinstalled.
6. Remove the bolts holding the 2 case halve together.

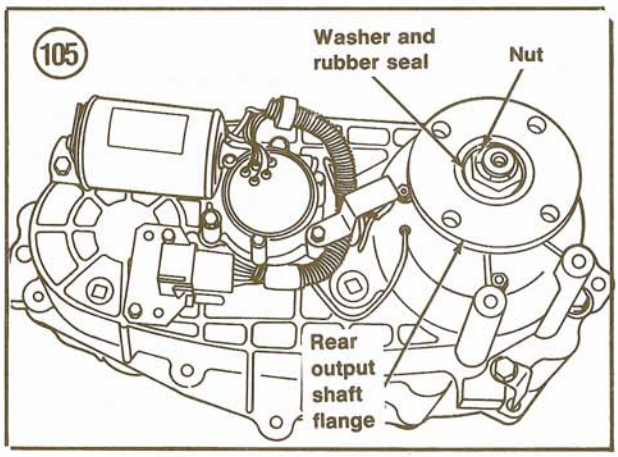

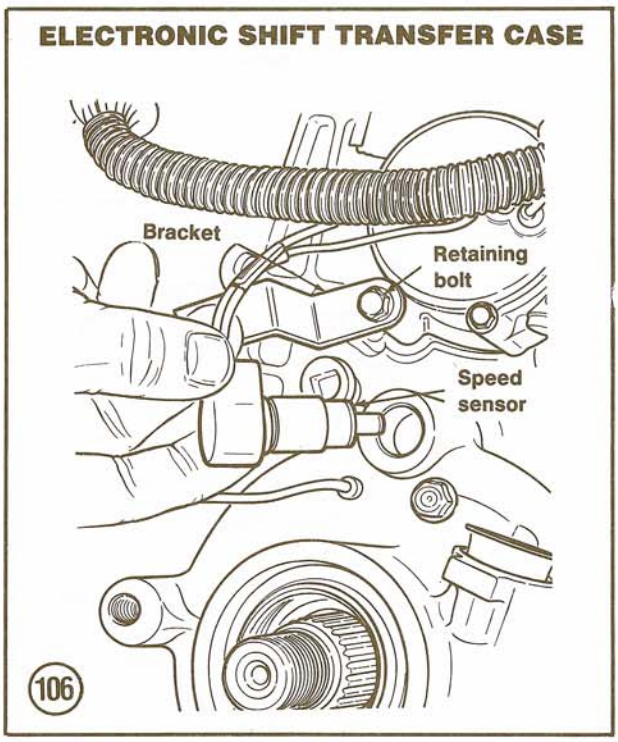

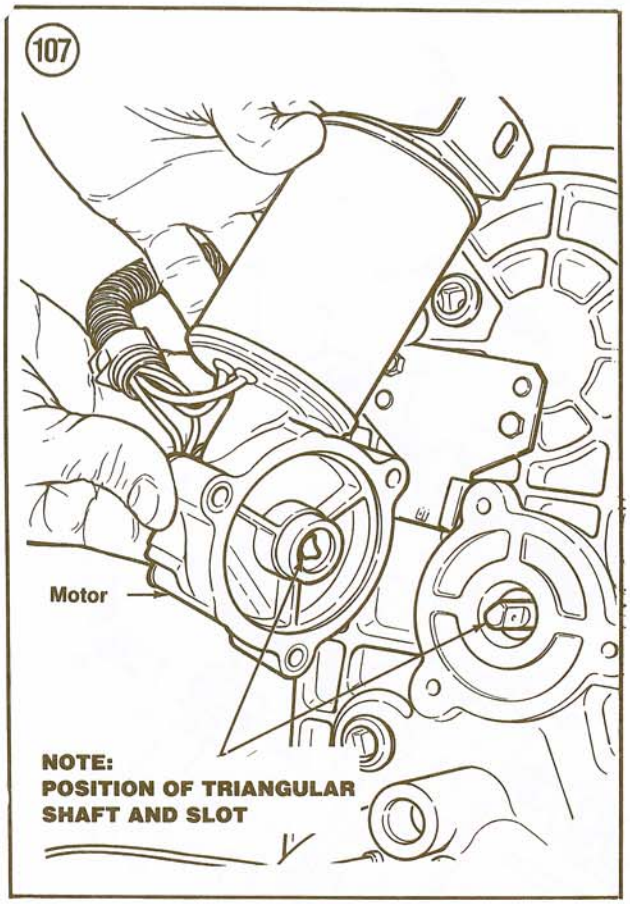

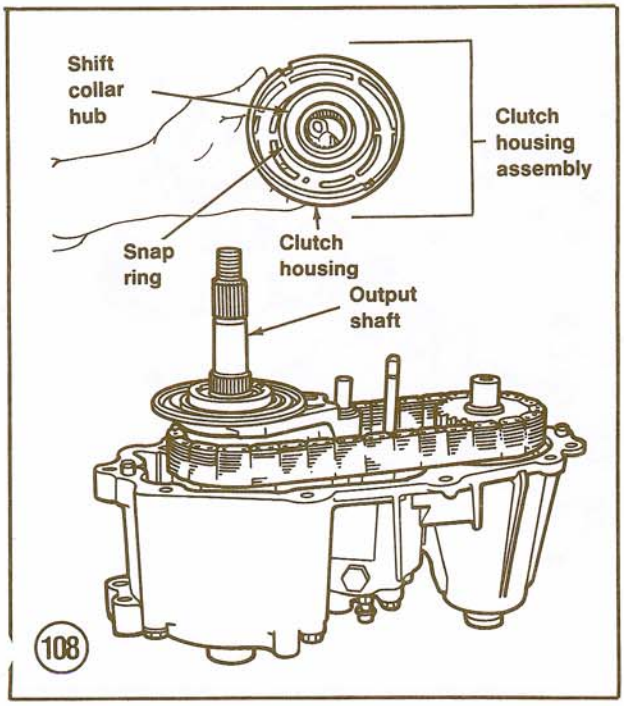

7. Pry the case halves apart by inserting a suitable flat-bladed screwdriver in the housing pry slots. Separate the case halves.
8. If the speedometer drive gear or ball bearing requires replacement:
   a. Drive the output shaft oil seal out with a brass drift and hammer. Discard the seal.
   b. Remove the speedometer drive gear, clip and spacer (**Figure 95**).
   c. Compress and remove the internal snap ring holding the rear output shaft ball bearing in the case.
   d. Support the case and drive the bearing out with replacer part No. T83T-7025-B or equivalent and a drive handle.
9. If the front output shaft caged needle bearing requires replacement, attach a slide hammer to puller collet part No. D80L-100-S and remove the bearing.
10. Remove the clutch coil assembly nuts. Remove the assembly with O-rings and brown wire from the cover.
11. Remove the large 2W-4W shift fork spring. It may be located on the rear cover boss or in the front cover assembly on the shift fork boss.
12. Remove the magnetic clutch housing assembly from the output shaft (**Figure 108**). If the clutch housing and shift collar require disassembly, remove the snap ring holding the 2 units together and separate them.
13. Remove the lockup assembly and shift fork from the front case as a unit. Separate the lockup assembly and shift fork after removal. Do not lose the nylon wear pads on the fork tips.
14. Remove the shift rail from the front case.
15. If disassembly of the lockup assembly is necessary, compress the internal snap ring and remove the lockup hub and spring from the lockup collar. See **Figure 109**.

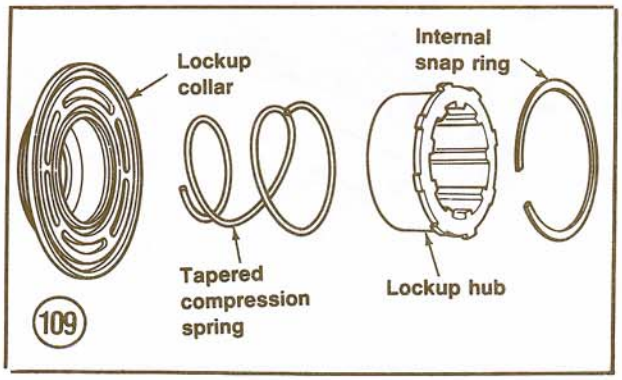

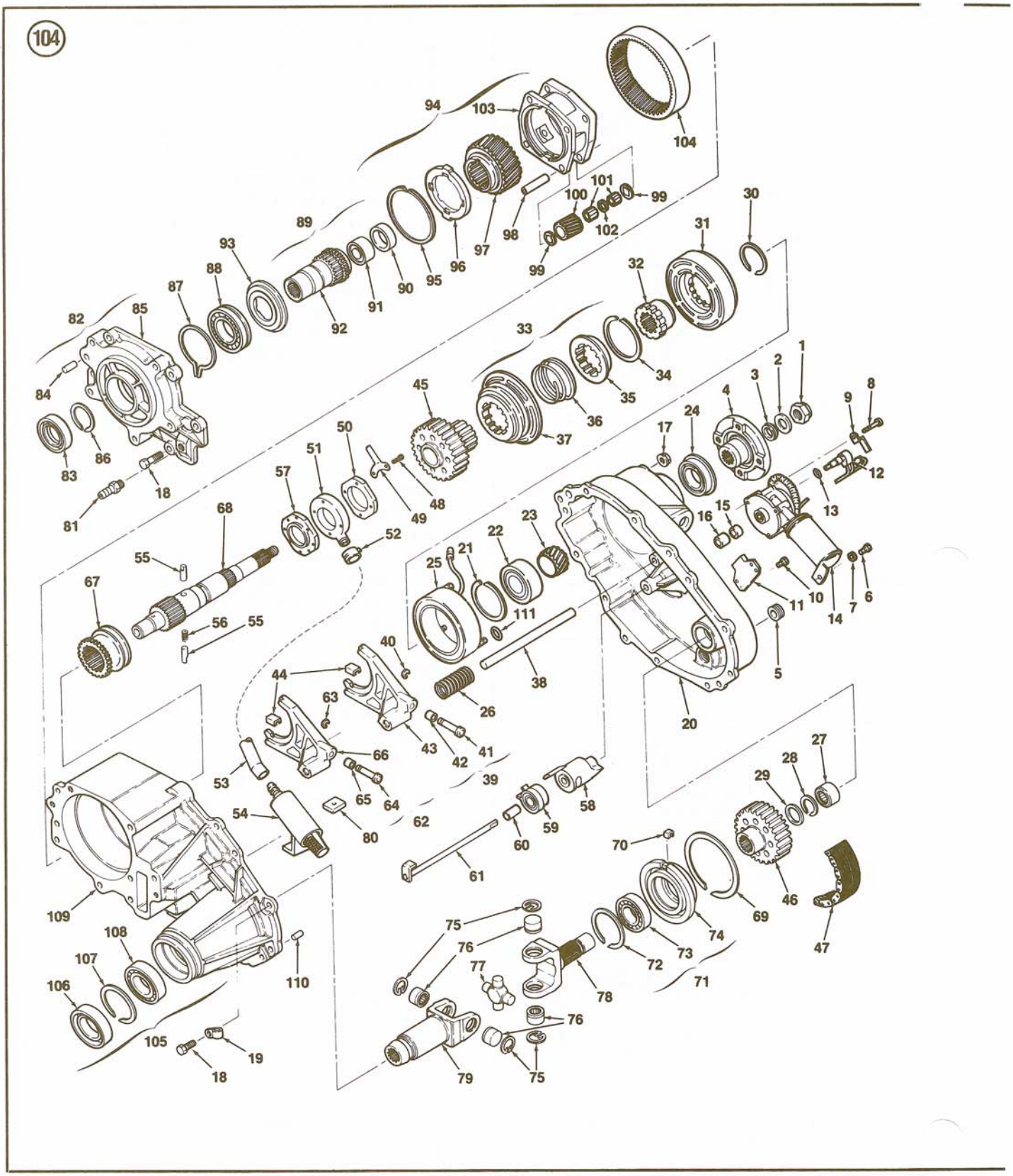
104
94
103
104
101
100
99
102
30
31
89
93
88
87
82
85
92
91
90
95
96
97
98
99
32
33
34
35
36
37
1
2
3
4
8
9
12
13
84
83
86
18
81
45
50
51
57
48
49
52
68
55
67
56
55
17
24
15
16
23
22
21
25
111
38
11
10
14
7
6
5
20
40
44
63
26
43
42
41
39
66
53
65
64
62
54
80
58
59
60
61
27
28
29
70
46
69
47
109
108
107
106
110
105
19
18
75
76
77
78
72
73
74
71
76
79
75

1. Nut
2. Flange washer
3. Oil seal
4. Companion flange
5. Pipe plug
6. Bolt
7. Flat washer
8. Bolt
9. Speed sensor bracket
10. Bolt
11. Wiring harness bracket
12. Speed sensor
13. O-ring
14. Motor assembly
15. Oil seal
16. Bearing sleeve
17. Nut
18. Bolt
19. Wiring harness clip
20. Transfer case cover
21. Snap ring
22. Annular bearing
23. Speedometer gear
24. Oil seal
25. Clutch coil assembly
26. Spring
27. Needle bearing
28. Snap ring
29. Spacer
30. Retaining ring
31. Clutch housing
32. Shift collar hub
33. 2W-4W lockup assembly
34. Retaining ring
35. Reduction hub
36. Sleeve return spring
37. 2W-4W lockup collar
38. Rail shaft
39. 2W-4W shift fork
40. Crecent ring
41. Shift fork roll pin
42. Roller cam
43. Lockup fork
44. Wear pads
45. Driven sprocket
46. Drive sprocket
47. Drive chain
48. Bolt
49. Pump retainer
50. Pump rear cover
51. Pump housing
52. Hose clamp
53. Hose coupling
54. Oil strainer
55. Pump pin
56. Pump pin spring
57. Pump front cover
58. Electric shift cam
59. Torsion spring
60. Spacer
61. Shift shaft
62. Reduction shift fork assembly
63. Crescent ring
64. Shift fork roll pin
65. Roller cam
66. Reduction shift fork
67. Reduction hub
68. Output shaft
69. Snap ring
70. Retainer clip
71. Bearing retainer assembly
72. Outer snap ring
73. Annular bearing
74. Bearing retainer
75. Retaining ring
76. Bearing
77. Spider
78. Front output shaft
79. Slip yoke
80. Magnet
81. Barbed hose breather
82. Front adapter assembly
83. Oil seal
84. Spiral pin
85. Front adapter
86. Retaining ring
87. Snap ring
88. Annular bearing
89. Input shaft and bearing assembly
90. Bearing sleeve
91. Needle bearing
92. Input shaft
93. Thrust washer
94. Complete carrier assembly
95. Retaining ring
96. Carrier thrust plate
97. Sun gear
98. Planet pinion pin
99. Pinion thrust washer
100. Pinion gear
101. Needle roller bearing
102. Pinion needle spacer
103. Planet carrier
105. Transfer case assembly
106. Oil seal
107. Retaining ring
108. Annular bearing
109. Transfer case
110. Dowel
111. O-ring

16. Remove the camshaft assembly from the front case (**Figure 110**). If necessary, remove the helical cam, torsion spring and sleeve from the camshaft.
17. Expand and remove the snap ring and thrust washer holding the driven sprocket to the front output shaft. See **Figure 110**.
18. Grasp the chain and both sprockets. Pull the chain and sprockets straight off the output shafts as an assembly.
19. Remove the magnet from the case notch (**Figure 111**).
20. Remove the output shaft and oil pump as an assembly (**Figure 111**).
21. Remove the high-low range shift fork and hub from the front case as an assembly. Do not lose the nylon wear pads on the fork tips.
22. Invert the front cover and unbolt the mounting adapter. Remove the adapter, input shaft and planetary gear set as an assembly. See **Figure 100**.
23. Refer to **Figure 99** and:
    a. Compress and remove the large internal snap ring.
    b. Rap on the front output shaft/U-joint assembly face with a soft-faced hammer to free the bearing retainer. Remove the retainer.
    c. If bearing replacement is required, compress and remove the small internal snap ring from the retainer. Drive bearing from retainer with bearing replacer part No. T83T-7127-A and a suitable driver handle.
    d. Remove the front output shaft/U-joint assembly from the case.
    e. If oil seal requires replacement, attach a slide hammer to remover part No. 1175-AC and remove the seal. Install a new one with a suitable installer.
    f. If U-joint requires replacement, see Chapter Twelve.
24. Clean and inspect all components as described under *Manual Transmission, Cleaning and Inspection, Transmission and Transfer Case* in this chapter.

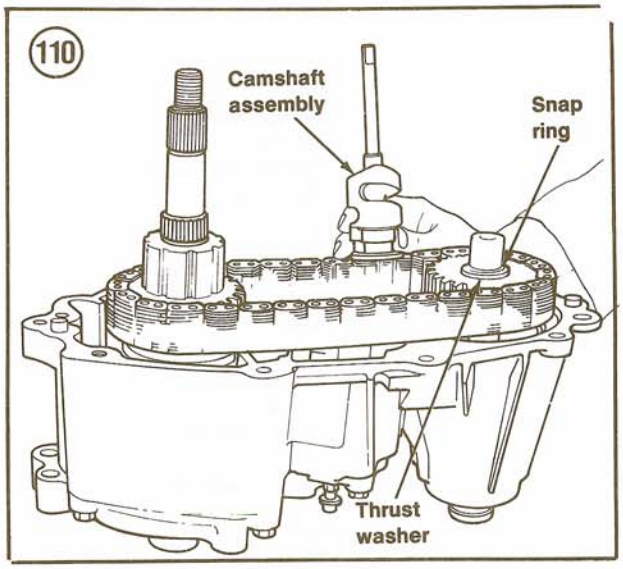

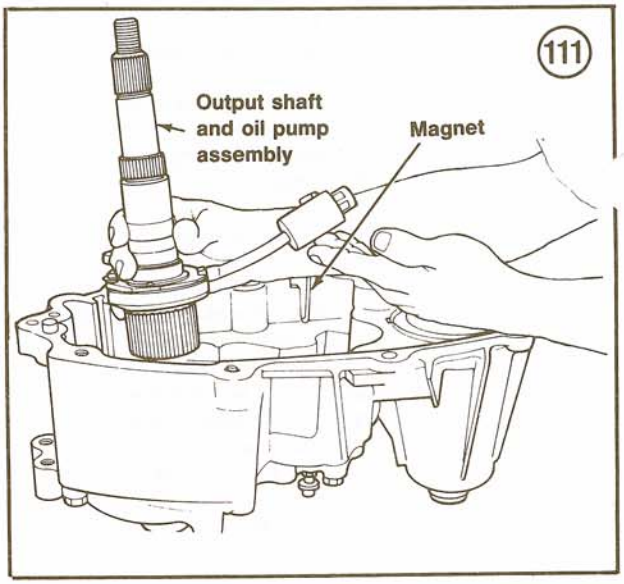

Planetary Gear Set Disassembly/Assembly

Refer to **Figure 100** for this procedure.

1. Expand the large snap ring tangs in the mounting adapter and pry under the planetary gear set with screwdrivers to separate the input shaft and planetary gear set from the adapter.
2. Compress and remove the planetary carrier internal snap ring, then separate the gear set from the input shaft.
3. Expand and remove the input shaft snap ring. Remove the input shaft bearing with a hydraulic press and universal bearing puller.
4. Remove the thrust washer, thrust plate and sun gear from the input shaft.
5. Clean and inspect all components.
6. Install the sun gear, thrust plate and thrust washer on the input shaft. The recessed face of the sun gear should face the rear of the case; t stepped face of the thrust washer should face out.

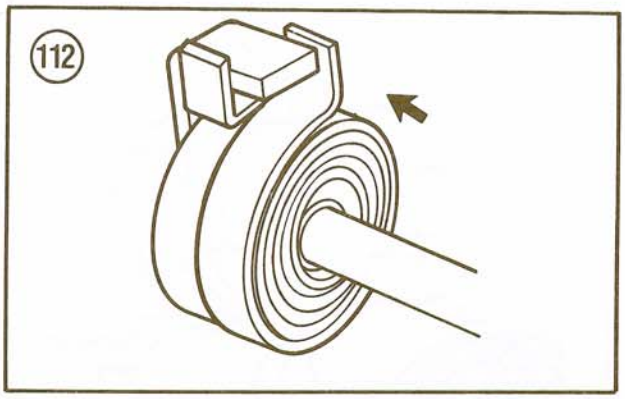

7. Press the ball bearing on the input shaft and install a new snap ring.
8. Mate the planetary gear set to the sun gear and input shaft assembly, then install a new internal snap ring in the planetary carrier.
9. If the mounting adapter oil seal requires replacement, remove it with a slide hammer and remover part No. 1175-AC. Install a new seal in the adapter bore with installer part No. T83T-7065-A and a suitable driver handle.
10. Fit the tanged snap ring in the adapter groove. Locate the input shaft/planetary assembly in the adapter and push down until they seat fully, causing the snap ring to engage the assembly. To check snap ring engagement, hold adapter and rap the input shaft face against a soft wooden block. It should not come free if snap ring is properly engaged.

Transfer Case Assembly

Refer to **Figure 104** for this procedure.
1. Lubricate all components with DEXRON II automatic transmission fluid.
2. Make sure that all RTV gasket sealant residue has been removed from the case mating flanges.
3. Refer to **Figure 99** and:
   a. If bearing was removed from retainer, install a new bearing with replacer part No. T83T-7025-B and a suitable driver. Install the small internal snap ring in the retainer.
   b. Insert the front output shaft/U-joint assembly in the front case. Fit the bearing retainer over the shaft and align the retainer clip with the case slot. Seat the retainer by tapping lightly with a soft-faced hammer, then install the large internal snap ring.
4. Run a thin bead of RTV sealant (part No. D6AZ-19562-A or -B) along the mounting adapter mating surfaces on the front case. Install the mounting adapter and tighten the bolts to specifications (**Table 1**).
5. Mate the high-low shift hub and fork. Fit the hub/fork assembly into the planetary gear set.
6. Install the output shaft/oil pump assembly (**Figure 110**). The outer splines of the shaft must engage the inner splines of the high-low shift hub. The pump retainer and oil filter leg must fit into the case groove and notch respectively.
7. Install the magnet in the case groove (**Figure 110**).
8. Assemble the chain to the drive and driven sprockets. Grasp the assembly and install in the case.
9. Install the front output shaft thrust washer, then install a new snap ring to hold the driven sprocket in place.
10. If the 2W-4W lockup assembly was disassembled, refer to **Figure 109** and:
    a. Insert the spring in the lockup collar.
    b. Fit the lockup hub over the spring, then engage the lockup hub in the collar notches.
    c. Install the internal snap ring to hold the hub to the collar.
11. Insert the shift rail through the high-low fork and seat it in the front case bore.
12. Install the 2W-4W shift fork on the lockup assembly. Fit the fork/lockup assembly on the output shaft and engage the fork with the shift rail.
13. If camshaft assembly was disassembled:
    a. Slip the spring spacer on the camshaft, positioning it under the drive tang.
    b. Install the torsion spring on the camshaft drive tang. Position the first spring tang to the left of the camshaft drive tang, then wind the second spring tang clockwise and position it on the right of the drive tang. Push the spring and sleeve on the camshaft as far as possible. See **Figure 112**.
14. Insert the tanged end of the camshaft assembly on the front case alignment pin (pressed into the case). Position the camshaft and torsion spring tangs to point toward the top of the transfer case and touch the high-low shift fork.
15. Depress the shift rail and lift the 2W-4W shift fork just enough to position the helical cam track in the high-low and 2W-4W fork roller bushings by rotating the camshaft assembly. When correctly installed, the triangular shaft should be in the 2H position. See **Figure 113**.

16. If the clutch housing and shift collar were disassembled, fit them together and install the retaining snap ring. Install the magnetic clutch housing assembly on the output shaft (**Figure 108**).
17. If the rear cover caged needle bearing was removed, install a new one with bearing replacer part No. T83T-7127-A and a suitable driver handle.
18. If the rear cover ball bearing was removed, drive a new one in place with bearing replacer part No. T83T-7025-B and a suitable driver. When bearing is properly seated, install the internal snap ring.
19. If the rear cover oil seal was removed, install a new one with installer part No. T83T-7065-B and a suitable driver handle.
20. Install new O-rings on the clutch coil studs and grommet. Install the clutch coil assembly in the rear cover until its studs and wire protrude. Make sure the wire is free, then install and tighten the attaching nuts to specifications (**Table 1**). See **Figure 114**.
21. Install the 2W-4W shift fork spring on the shift rail and fork.
22. Run a thin bead of RTV sealant (part No. D6AZ-19562-A or -B) along the front case mating surfaces.

23. Align the rear cover with the front cover. The output shaft and camshaft assembly should be aligned with their respective bores in the rear cover. Lower the rear cover onto the front cover, making sure the shift fork spring engages the rear cover spring boss and the output shaft and camshaft assembly seat into their bores. If the covers do not seem to mate properly, insert a flat-blade screwdriver through the sensor hole until it engages the slot in the center of the 2W-4W shift fork. Use the screwdriver to move the fork toward the triangular shaft and engage the shift rail in the rear cover. See **Figure 115**.

24. Install and tighten the cover attaching bolts to specifications (**Table 1**).

25. Make sure the rear cover shaft and motor slot are aligned (**Figure 107**). If necessary, grasp the end of the shaft with soft-jaw pliers and rotate it as required. Engage the motor slot on the shaft and attach the motor assembly to the rear case. Tighten fasteners to specifications (**Table 1**).

26. Install the speed sensor in the case bore. Position the bracket over the sensor and tighten to specifications (**Table 1**).

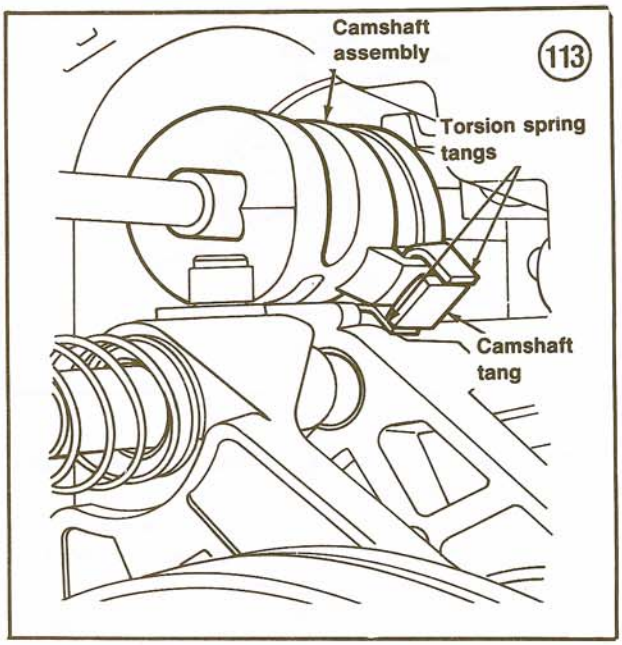

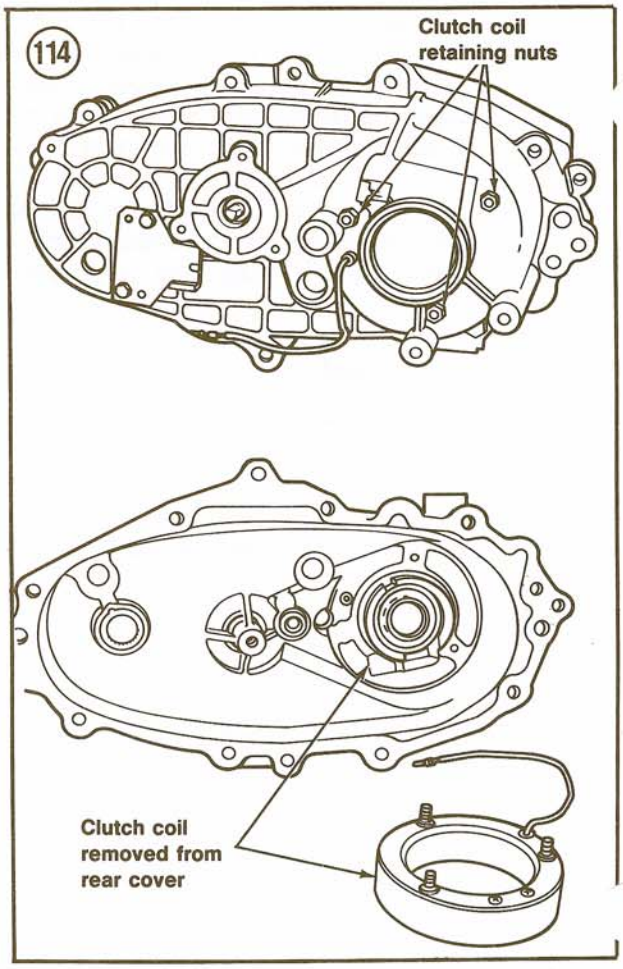

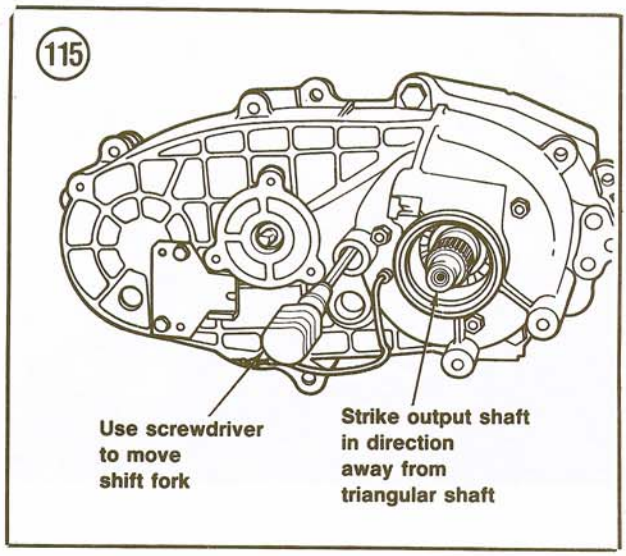

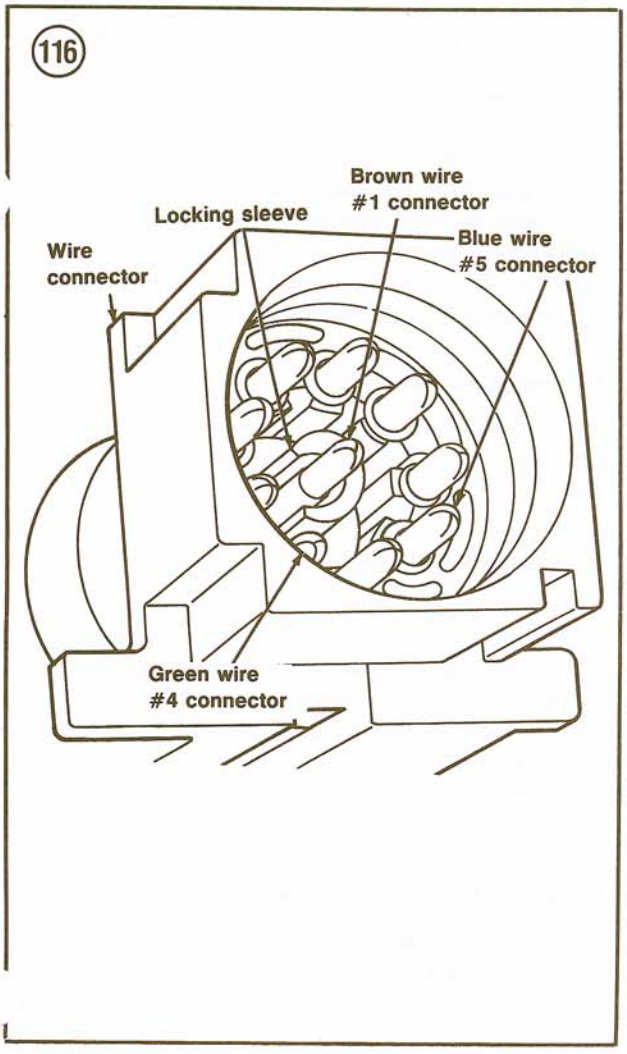

27. Reinstall the brown, green and blue wires to the connector. Refer to **Figure 116** for correct positioning of wires in the connector. Install the connector locking sleeve.
28. Install the wire connector assembly and bracket to the rear cover. Tighten fasteners to specifications (**Table 1**).
29. If the speedometer drive gear was removed:
    a. Install the spacer, clip and drive gear (**Figure 95**).
    b. Install a new output shaft oil seal with installer T83T-7065-B and a suitable driver.
30. Install the rear yoke on the output shaft. Slide the rubber seal and washer on the shaft. Thread the nut in place and use a holding tool to prevent the yoke from moving while the nut is tightened to specifications (**Table 1**). See **Figure 105**.
31. Install and tighten the drain plug to specifications (**Table 1**).
32. Remove the fill plug and fill the transfer case with the appropriate amount of DEXRON II automatic transmission fluid. See Chapter Three. Reinstall and tighten the fill plug to specifications (**Table 1**).
33. Install the transfer case as described in this chapter.

AUTOMATIC TRANSMISSION

The Ford C5, C3 or A4LD automatic transmission has been supplied as an option for vehicles with gasoline engines. The A4LD is derived from the C3 but its torque converter operation is controlled by the EEC-IV microprocessor.

The C5 transmission uses Type H automatic transmission fluid; the C3 and A4LD use DEXRON II fluid. Use of a transmission fluid other than that specified can result in a transmission malfunction and/or premature failure. For this reason, it is important that you know which automatic transmission model your vehicle has.

To determine the transmission type, check the transmission code on the vehicle certification label attached to the left front door lock face panel or door pillar. The C5 code is W; the C3 code is V and the A4LD code is T.

This section includes checks and adjustment procedures to be performed with the transmission in the vehicle. Many problems can be corrected with the adjustment procedures here. Automatic

transmission overhaul, however, requires professional skills, many special tools and extremely high standards of cleanliness. Although procedures for removal and installation are included in this chapter, disassembly and overhaul should be left to a Ford dealer or competent automatic transmission repair shop.

Checking Procedure

1. Park the vehicle on a level surface.
2. Make sure the engine starts only when the shift lever is in NEUTRAL or PARK. If it starts in any other position, adjust the C5 neutral start switch or replace the C3/A4LD switch as described in this chapter.
3. Make sure the backup lights go on when the transmission is shifted into REVERSE.
4. Make sure the vehicle moves forward in DRIVE and backward in REVERSE.
5. Make sure the shift selector indicator points to the correct range. If the indicator is out of alignment, adjust the shift linkage as described in this chapter.
6. Check fluid level as described in this chapter.
7. Shut the engine off.

Fluid Level and Condition Check

1. Start the engine and let it warm to normal operating temperature (upper radiator hose hot).
2. With the engine idling, shift from PARK to each of the other gear positions, then shift back to PARK.
3. Clean all dirt from the dipstick tube, then pull out the dipstick (**Figure 117**). Wipe the dipstick off with a clean cloth or paper towel, then reinsert it completely. Wait a moment and pull it back out.
4. Note the fluid level. It should be between the 2 embossed squares or arrows on the dipstick.
5. Note the color and odor. The fluid on the dipstick should be reddish in color. It it is brownish, black or has a burnt odor, overheating is indicated and a clutch disc/band failure is possible.

NOTE

Type H fluid used in the C5 transmission contains a detergent to hold particles in suspension which have been created during normal use. This may cause the fluid to appear darker than normal, but should not be interpreted as indicating a malfunction or need for repair.

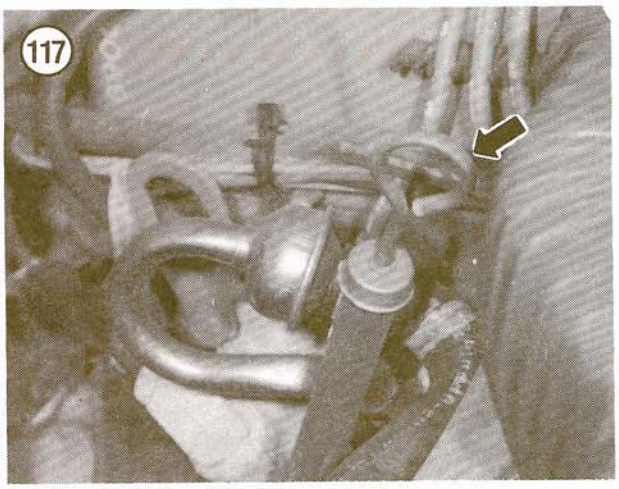

6. Wipe the dipstick on a clean paper towel and check the fluid stain. If metallic particles are noted, remove the transmission oil pan (Chapter Three). Excessive particles in the oil pan indicate that the transmission should be removed, disassembled and cleaned. See your Ford dealer.
7. If the fluid level is low, add the appropriate automatic transmission fluid through the dipstick filler tube to bring the level between the embossed squares or arrows on the dipstick. Use only Type H fluid for C5 transmissions or DEXRON II fluid for C3 and A4LD transmissions.

Neutral Start Switch

The C5 transmission switch can be adjusted; the C3 and A4LD switch is serviced by replacement only.

C5 switch adjustment

Refer to **Figure 118** for this procedure.
1. Place the selector lever in NEUTRAL.
2. Loosen the neutral start switch bolts.
3. Insert a 3/32 in. gauge pin or drill through the hole in the switch. Move the switch as necessary to seat the drill.
4. Tighten the switch bolts to 45-75 in.-lb. (7-9 N•m) and remove the drill.

C3 and A4LD switch replacement

Refer to **Figure 119** for this procedure.
1. Set the parking brake. Block the drive wheels.
2. Raise the front of the vehicle with a jack and place it on jackstands.

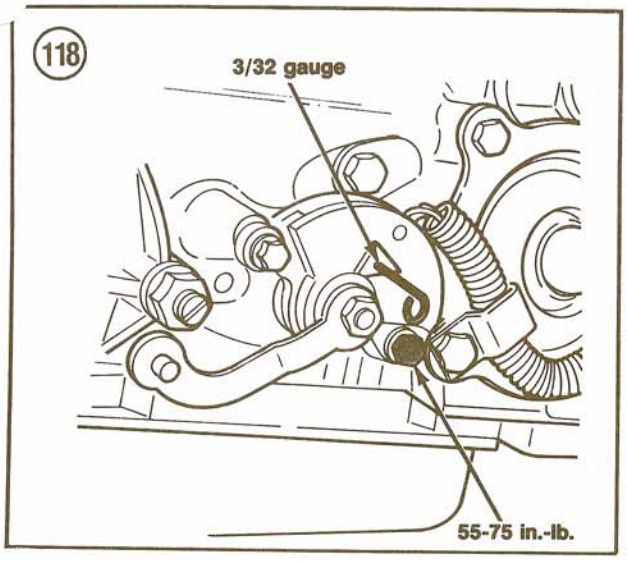

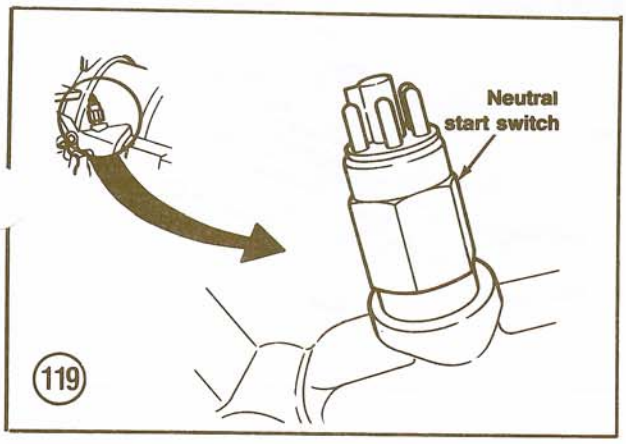

3. Disconnect the electrical connector plug at the neutral start switch.

CAUTION

Ford recommends the use of a special switch socket tool in Step 4 to prevent the possibility of crushing or puncturing the switch walls.

4. Unscrew and remove the switch with Ford tool part No. T74P-77247-A or equivalent.
5. Remove and discard the switch O-ring.
6. Installation is the reverse of removal. Use a new O-ring and tighten the switch to 7-10 ft.-lb. (10-14 N•m).

Manual Linkage Adjustment

Correct manual linkage adjustment is critical to the performance and service life of an automatic transmission. It positions the manual valve in the transmission to provide proper fluid pressure and direction to the various components. Improper adjustment can cause cross-leakage and result in premature transmission failure.

Refer to **Figure 120** (typical) for this procedure.

1. Place the selector lever in DRIVE.
2. Raise the vehicle with a jack and place it on jackstands.
3. Loosen the shift rod trunnion nut located at the base of the selector lever housing.

NOTE

*Make sure that the shift lever detent pawl is held against the "D" detent stop during linkage adjustment. See **Figure 121** (typical).*

4. Move the bellcrank lever as far to the rear as possible, then forward 3 detents. This positions the transmission manual lever in the DRIVE range.
5. Apply light pressure (toward the front of the vehicle) on the shift control tower arm. Tighten the trunnion bolt to 13-23 ft.-lb. (18-31 N•m).
6. Check shift lever operation in all gear positions with the engine running. If adjustment is not correct, repeat the procedure.

BAND ADJUSTMENT

Band adjustments should be part of regular transmission maintenance, especially if the vehicle is subjected to severe service conditions.

C5 Transmission
Intermediate (Front)
Band Adjustment

Adjustment is made on the lower left side of the transmission case near the front. See **Figure 122** (typical).

1. Securely block both front wheels so the truck will not roll in either direction. Raise the vehicle with a jack and place it on jackstands.
2. Clean the adjusting screw threads of all dirt, grease and contamination. Lubricate the screw threads with light engine oil.
3. Remove and discard the locknut.
4. Loosely install a new locknut and tighten the adjusting screw to 10 ft.-lb. (14 N•m).
5. Back the adjusting screw off exactly 4 1/4 turns.
6. Hold the adjusting screw from moving with a box-end wrench and torque the locknut to 40 ft.-lb. (54 N•m).

120

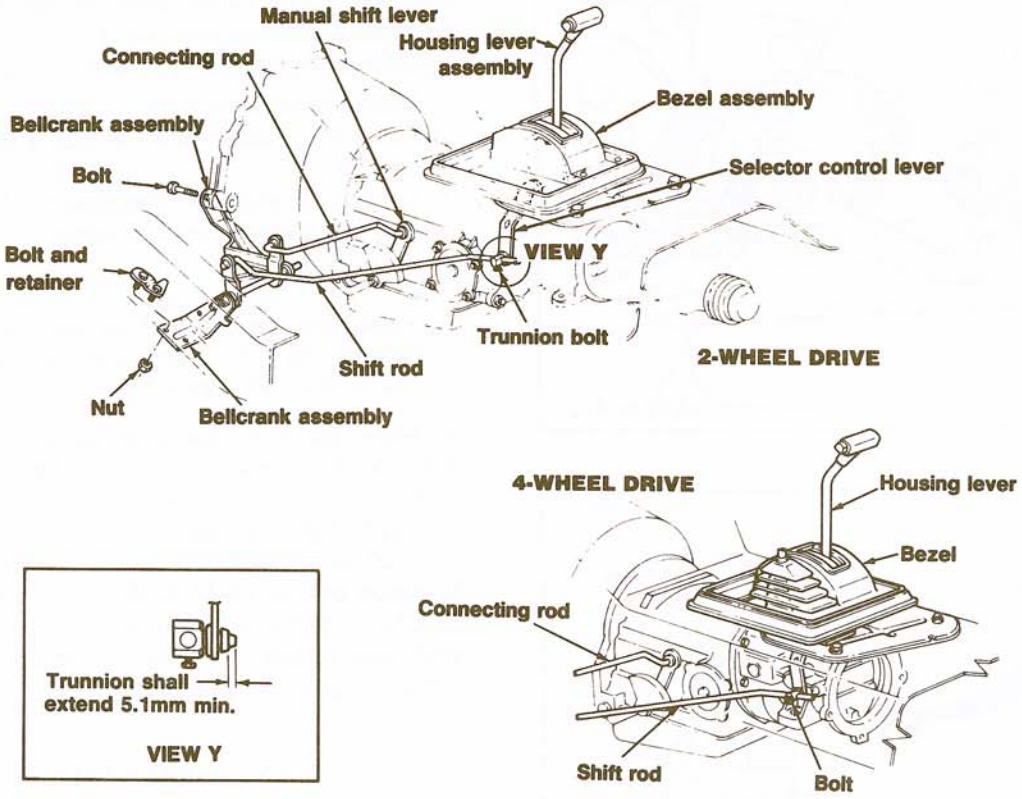

C5 Transmission
Low-reverse (Rear) Band Adjustment

Adjustment is made on the lower right side of the transmission case toward the rear. See **Figure 123** (typical).

1. Securely block both front wheels so the truck will not roll in either direction. Raise the vehicle with a jack and place it on jackstands.
2. Clean the adjusting screw threads of all dirt, grease and contamination. Lubricate the screw threads with light engine oil.
3. Remove and discard the locknut.
4. Loosely install a new locknut and tighten the adjusting screw to 10 ft.-lb. (14 N•m).
5. Back the adjusting screw off exactly 3 turns.
6. Hold the adjusting screw from moving with a box-end wrench and torque the locknut to 40 ft.-lb. (54 N•m).

121

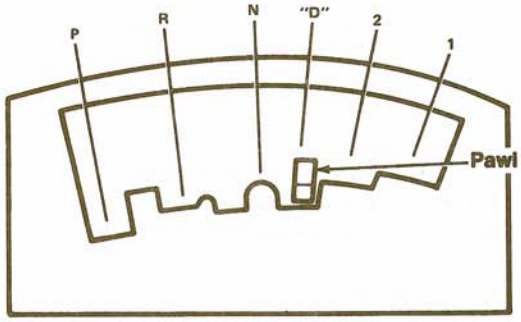

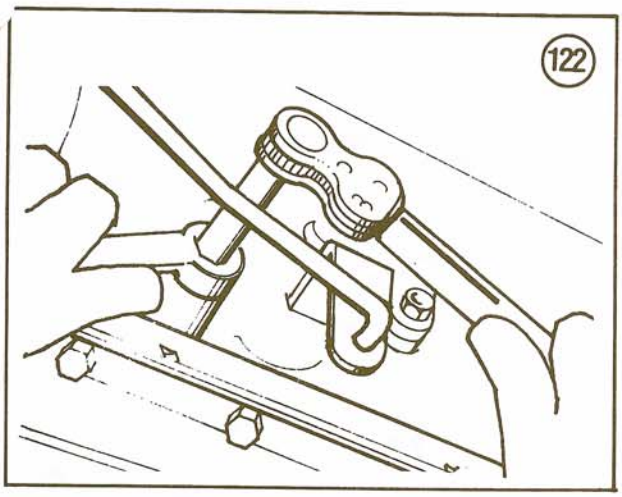

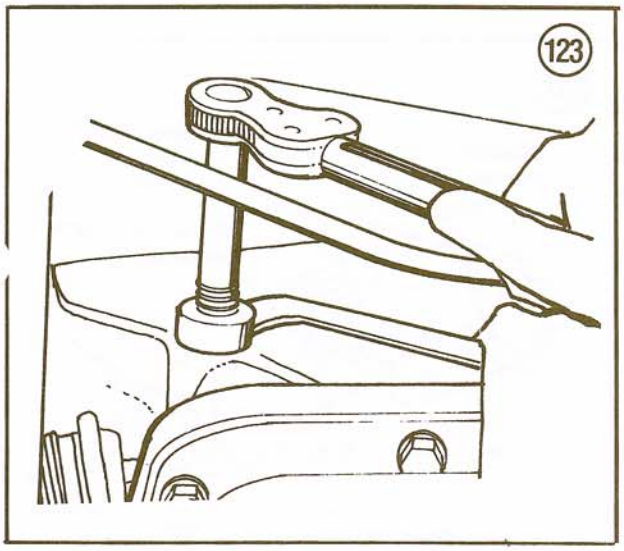

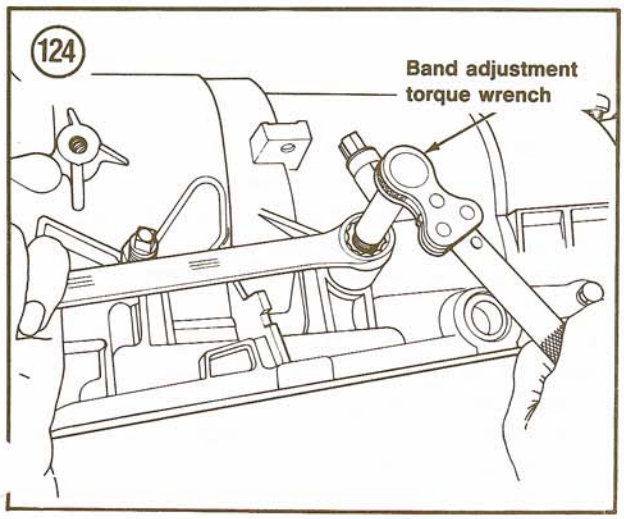

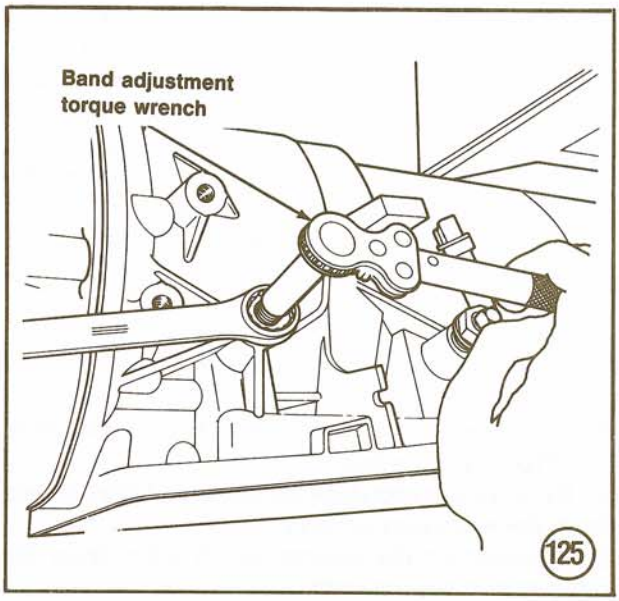

C3 and A4LD Transmission
Intermediate (Front)
Band Adjustment

Adjustment is made on the lower left side of the transmission case near the front. See **Figure 124** (typical).

1. Securely block both front wheels so the truck will not roll in either direction. Raise the vehicle with a jack and place it on jackstands.
2. Clean the adjusting screw threads of all dirt, grease and contamination. Lubricate the screw threads with light engine oil.
3. Remove and discard the locknut.
4. Loosely install a new locknut and tighten the adjusting screw to 10 ft.-lb. (14 N•m).
5. Back the adjusting screw off exactly 1 1/2 turns.
6. Hold the adjusting screw from moving with a box-end wrench and torque the locknut to 40 ft.-lb. (54 N•m).

A4LD Transmission
Overdrive Band Adjustment

Adjustment is made on the lower left side of the transmission case near the front. See **Figure 125** (typical).

1. Securely block both front wheels so the truck will not roll in either direction. Raise the vehicle with a jack and place it on jackstands.
2. Clean the adjusting screw threads of all dirt, grease and contamination. Lubricate the screw threads with light engine oil.

4. Remove the converter access cover at the front of the flywheel housing. Use a wrench on the crankshaft pulley bolt to turn the engine over and gain access to a converter attaching bolt. Remove the bolt and rotate the crankshaft a partial turn to align another bolt for removal. Continue this procedure until all bolts are removed.
5. Remove the drive shaft. See Chapter Eleven.
6. Disconnect the oil cooler lines at the transmission. Cap the lines and fittings to prevent leakage and the entry of contamination.
7. Remove the dipstick tube located near the oil cooler line fittings.
8. Disconnect the linkage rods at the transmission. See **Figure 120** (typical).
9. Remove the speedometer cable and driven gear from the extension housing.
10. Disconnect the backup switch wires from the retainer clip and retainer.
11. Disconnect the neutral start switch connector.
12. Disconnect the converter clutch solenoid connector on A4LD models.
13. Remove the starter motor. See Chapter Seven.
14. Disconnect the vacuum line at the vacuum modulator. Remove line from retainer clip.
15. Support the transmission with a jack. Install a safety chain to hold the transmission to the jack.
16. Remove the 2 transmission mount nuts. Remove the 2 crossmember-to-frame bolts. See **Figure 126** (V6) or **Figure 127** (4-cylinder).
17. C5 models—Remove the right and left gussets.
18. Remove the rear insulator-to-extension housing bolts.
19. Raise the transmission slightly with the jack. Remove the rear mount from the crossmember. Remove the crossmember from the side supports.
20. Remove the converter housing-to-engine bolts. With A4LD models, the front of the engine should be raised with a jack to provide access to the upper 2 attaching bolts.
21. Move the transmission back slightly and install a holding fixture to prevent the torque converter from falling out.
22. Lower the transmission carefully and remove it from under the vehicle.

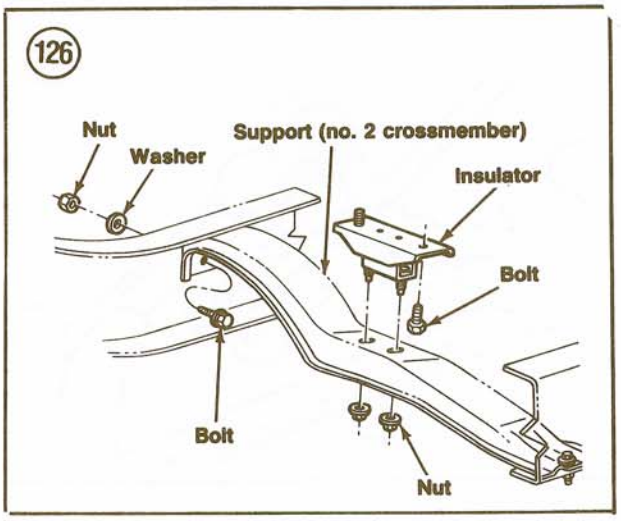

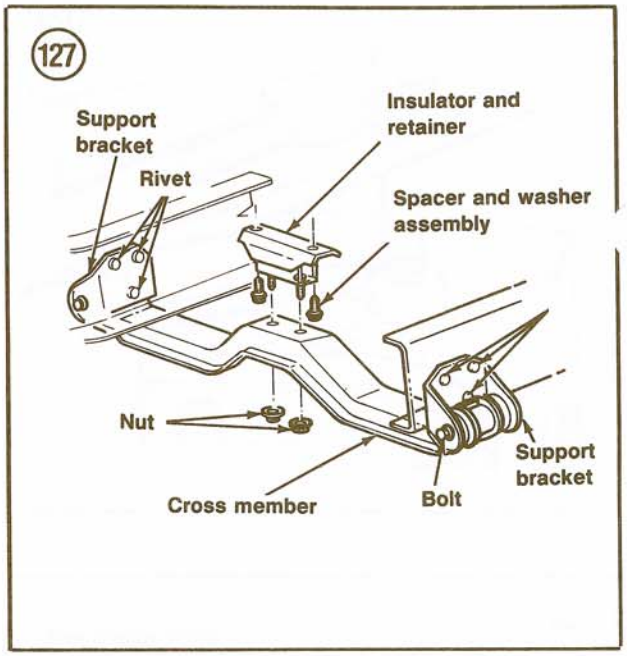

Transmission Removal

1. Disconnect the negative battery cable.
2. Raise the vehicle with a jack and place it on jackstands.
3. Drain the fluid. See Chapter Three.

CAUTION

Rotate the crankshaft in a clockwise direction in Step 4 or the camshaft timing belt on 4-cylinder engines will jump teeth and change ignition timing.

4. Loosely install a new locknut and tighten the adjusting screw to 10 ft.-lb. (14 N•m).
5. Back the adjusting screw off exactly 2 full turns.
6. Hold the adjusting screw from moving with a box-end wrench and torque the locknut to 40 ft.-l (54 N•m).

Transmission Installation

Installation is the reverse of removal, plus the following:

1. Make sure the converter rests squarely against the flywheel. This prevents the converter pilot from binding in the engine crankshaft.
2. Tighten all fasteners to specifications (**Table 1**).
3. Fill the transmission with the required amount and type of fluid. See Chapter Three.
4. Check the fluid level as described in this chapter. Add or remove fluid as required.
5. Warm the engine to normal operating temperature, then recheck the fluid level and adjust as required.
6. Adjust the manual linkage as described in this chapter.
7. On C5 transmissions, adjust the neutral start switch as described in this chapter.
8. Road test the vehicle. Make sure the transmission shifts smoothly, makes no abnormal noises and holds the vehicle when in PARK (parking brake should be applied). After road testing, check for fluid leaks.

Table 1 SPECIFICATIONS

Fastener	ft.-lb.	N•m
CLUTCH		
Cover bolts	15-24	21-32
Clutch housing bolts	28-38	38-51
Dust shield	5-10	7-13
Fluid reservoir attaching bolts	1.5-2.0	2.1-2.7
Master cylinder attaching bolts	15-20	21-27
TOYO KOGYO 4- AND 5-SPEED TRANSMISSION		
Clutch release lever pivot	23-34	32-46
Crossmember-to-frame		
1983-1984	48-65	65-88
1985-on	65-85	88-115
Drain plug	29-43	40-58
Fill plug	18-29	25-39
Insulator-to-transmission	60-80	81-109
Insulator-to-crossmember	71-94	96-128
Interlock pin bore plug	7.5-11	11-14
Mainshaft nut	145-203	197-275
Shift rail detent spring cap	29-43	40-58
Switches	22-29	30-39
DIESEL 4-SPEED TRANSMISSION		
Clutch release lever pivot	23-34	32-46
Control lever bolt	20-25	28-34
Crossmember-to-frame	65-85	88-115
Drain plug	29-43	40-58
Fill plug	18-29	25-39
Insulator-to-transmission	60-80	81-109
Insulator-to-crossmember	71-94	96-128
Mainshaft nut	116-174	160-240
Shift rail detent spring cap	29-43	40-58
Switches	22-29	30-39
MITSUBISHI 5-SPEED TRANSMISSION		
Clutch housing-to-transmission	30-40	41-54
Countershaft locknut	115-137	157-168

(continued)

Table 1 SPECIFICATIONS (continued)

Fastener	ft.-lb.	N•m
MITSUBISHI 5-SPEED TRANSMISSION (continued)		
Crossmember-to-frame		
V6	110-140	149-190
All others	65-85	88-115
Drain plug	25-32	35-44
Fill plug	22-25	30-34
Front bearing retainer	22-30	30-41
Insulator-to-transmission	60-80	81-109
Insulator-to-crossmember		
2.3L diesel	71-94	96-128
2.3L EFI	130-174	96-128
V6	65-85	88-115
Mainshaft locknut	180-195	245-265
Pan-to-case	11-16	15-21
Rear bearing retainer	22-30	30-41
Reverse idler gear nut	15-42	20-58
Reverse idler gearshaft assembly	11-16	15-21
Shift lever-to-transfer case adapter	6-10	8-14
Stud-to-front retainer and case	22-30	30-41
BORG WARNER 13-50 TRANSFER CASE		
Breather vent	6-14	8-19
Case-to-cover bolts	23-30	31-41
Drain/fill plugs	14-22	19-30
Four-wheel drive indicator switch	25-35	34-47
Front/rear drive shaft bolts	12-15	16-20
Heat shield bolts	27-37	34-47
Shift control bolt		
Large	70-90	95-122
Small	31-42	42-57
Skid plate bolts	22-30	30-41
Transfer case-to-adapter	25-35	34-47
Yoke nut	120-150	163-203
BORG WARNER 13-50 TRANSFER CASE (ELECTRONIC SHIFT)		
Breather vent	6-14	8-19
Case-to-cover bolts	23-30	31-41
Drain/fill plugs	14-22	19-30
Front drive shaft yoke bolts	12-15	16-20
Heat shield bolts	27-37	34-47
Motor mount/bracket and clutch coil nut	6-8	8-11
Rear drive shaft flange bolts	61-87	83-118
Skid plate bolts	22-30	30-41
Transfer case-to-adapter	25-43	34-58
Wire connector bracket	5-7	7-9.5
Yoke nut	150-180	203-244

(continued)

Table 1 SPECIFICATIONS (continued)

AUTOMATIC TRANSMISSION		
Fastener	**ft.-lb.**	**N·m**
Bellcrank assembly nut	20-30	27-41
Converter housing-to-engine	28-38	38-51
Converter-to-flywheel		
C5, A4LD	20-34	27-46
C3	27-49	37-66
Crossmember attaching bolts		
1983-1984	48-65	65-88
1985-on	65-85	88-115
Insulator		
To transmission	60-80	80-108
To crossmember		
2-wheel drive		
4-cylinder	65-80	89-108
V6	71-94	97-127
4-wheel drive	71-94	97-127
Shift housing bezel assembly screws	2-3	3-4
Shift rod trunnion bolt	13-23	18-31
STANDARD NUT/BOLT TORQUE*		
6 mm	5-7.5	7-11
8 mm	12-17	17-23
10 mm	23-34	32-45
12 mm	41-59	56-79

* Use if fastener is not specified in this table.

9

CHAPTER TEN

FRONT SUSPENSION AND STEERING (2-WHEEL DRIVE)

All 2-wheel drive vehicles use a twin I-beam front suspension with telescopic shock absorbers, coil springs, I-beam axle arms, radius arms, ball-joints, spindles and tie rods.

The twin I-beam front suspension consists of an I-beam type axle for each front wheel. Each axle is connected to a wheel spindle at one end by upper and lower ball-joints, and to a frame pivot bracket on the opposite side of the vehicle at the other end. The ball-joints require no lubrication.

The front of each radius arm is bolted directly to the I-beam axle on all models. The rear of the radius arm attaches to a frame bracket behind the front axle.

Coil springs are positioned directly above the axle and attached between the radius arm and frame spring seat.

Telescopic shock absorbers installed between brackets on the frame rail and radius arm control suspension spring movement. Hydraulic shock absorbers are standard, with low-pressure gas shocks optional.

The front stabilizer bar (if so equipped) is positioned in front of the axle and connects directly to the radius arm (Ranger) or I-beam axle (Bronco II) with a rubber-insulated link assembly. The stabilizer bar maintains the front axle side position relative to the frame.

Ranger and Bronco II suspension componen location differs slightly. **Figure 1** shows the majo components of the Ranger front suspension. **Figure 2** shows the Bronco II front suspension. Tightening torques (**Table 1**) are provided at the end of the chapter.

FRONT SUSPENSION

Shock Absorber
Removal/Installation

Always use new rubber insulators/bushings when installing new shock absorbers. Refer to **Figure 3** (Ranger) or **Figure 4** (Bronco II) for this procedure.

1. Set the parking brake and securely block the rear wheels so the truck will not roll in either direction. Raise the front of the vehicle with a jack and place it on jackstands.
2. Remove the nut and washer holding the upper shock absorber stud to the spring seat.
3. Remove the nut and bolt holding the lower shock absorber eye to the radius arm and lower shock absorber bracket.
4. Compress the shock absorber slightly a remove it from the vehicle.

1 **FRONT SUSPENSION (RANGER 2-WHEEL DRIVE)**

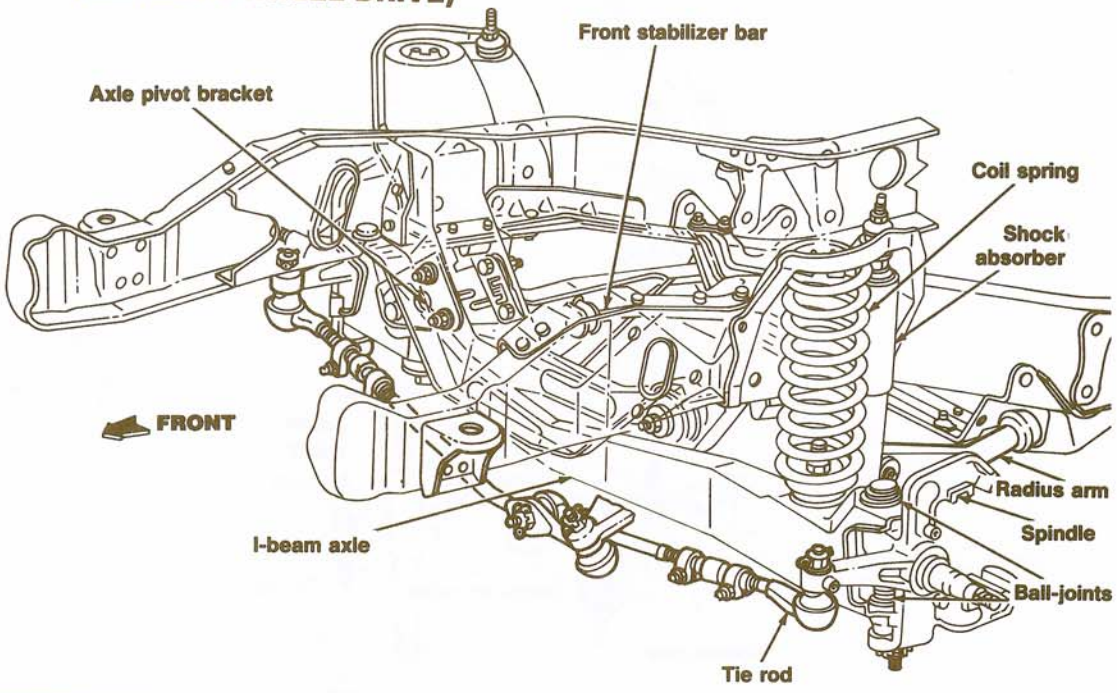

2

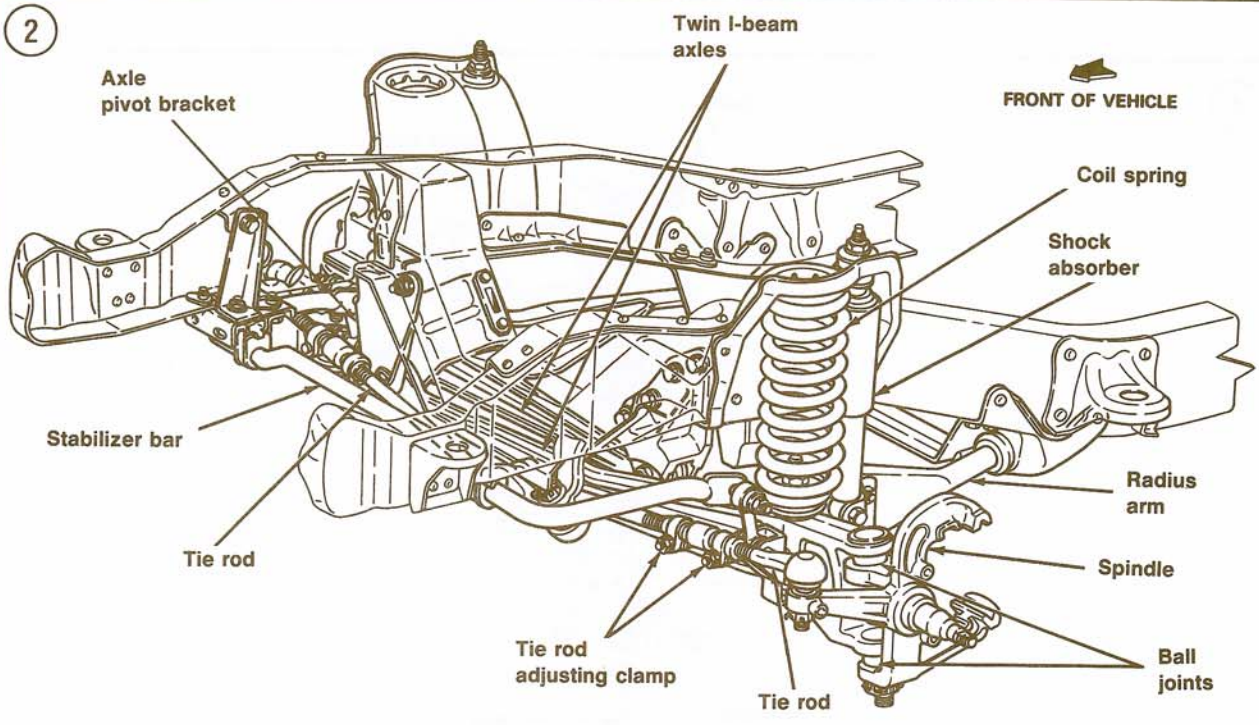

10

3

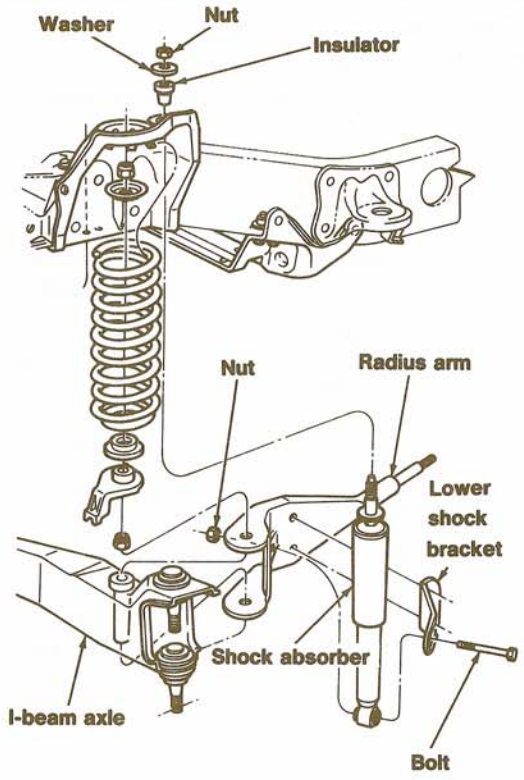
Washer
Nut
Insulator
Nut
Radius arm
Lower shock bracket
Shock absorber
I-beam axle
Bolt

4

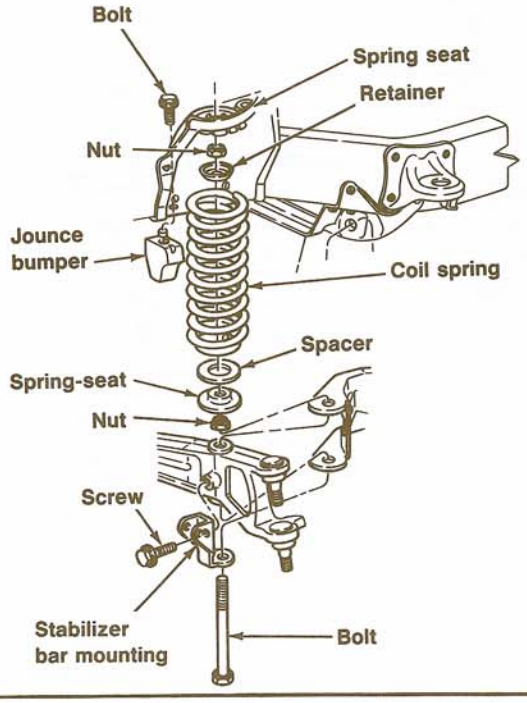
Bolt
Spring seat
Retainer
Nut
Jounce bumper
Coil spring
Spacer
Spring-seat
Nut
Screw
Stabilizer bar mounting
Bolt

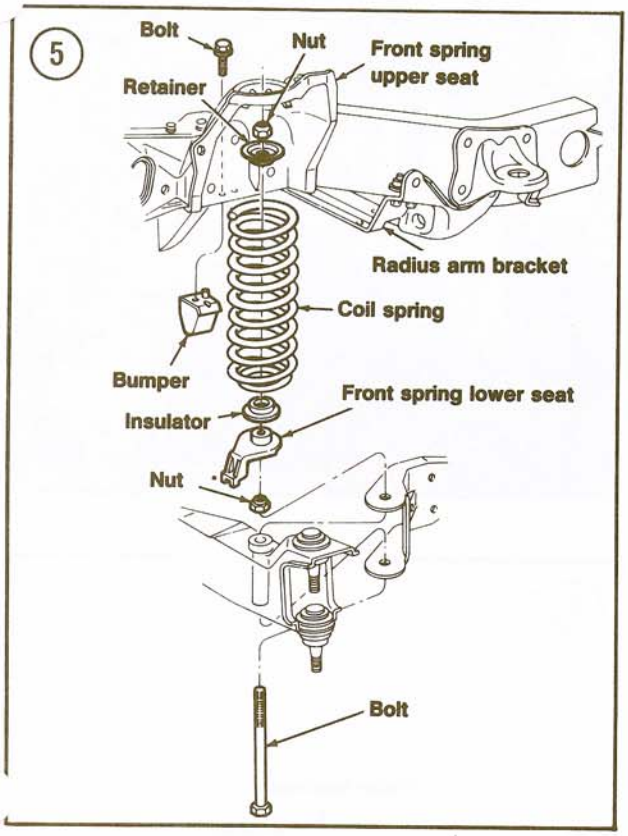

5. Check the shock absorber spring seat insulator bushing and replace as necessary.
6. Installation is the reverse of removal. Tighten fasteners to specifications (**Table 1**). Remove the jackstands and lower the vehicle to the ground.

Shock Absorber
Operational Check

Shock absorbers can be routinely checked while installed on the vehicle. Bounce the front of the vehicle up and down several times and release. Repeat this action with the rear of the vehicle. In either case, the vehicle should not continue to bounce more than twice. Excessive bouncing is an indication of worn shock absorbers. This test is not conclusive, since the spring stiffness of the vehicle makes it difficult to detect marginal shock absorbers.

If there is any doubt about their serviceability, remove the shock absorbers and perform the following procedure. If a shock absorber is found to be defective, replace all shocks on that end of the vehicle at the same time. If one shock absorber has failed because of physical damage, both should be replaced at the same time, even if the remaining shock appears to be satisfactory.

NOTE

Comparison of a used shock absorber believed to be good with a new shock absorber is not a valid test. The new shock absorber will tend to offer more resistance due to the greater friction of the new rod seal.

1. Inspect the shock absorber piston rod for bending, galling and abrasion. Discard the shock absorber if any of these conditions are noted.
2. Check the outside of the shock absorber for fluid leakage. A light film of fluid on the rod is normal, but severe leakage requires replacement.
3. Holding the shock absorber in the installed position, completely extend the rod, then invert the shock and completely compress the rod. Repeat this step several times to expel any trapped air.
4. Secure the lower end of the shock absorber in a vise with protective jaws. If protective jaws are not available, place the shock between soft wooden blocks or wrap it in shop cloths before clamping it in the vise.
5. Compress and extend the piston rod as rapidly as possible and check the damping action. The resistance should be smooth and uniform throughout each stroke, and the resistance felt during extension should be greater than during compression. Repeat this step with the other shock absorber. Both shock absorbers in a pair should feel the same.
6. If the damping action is erratic or resistance to rapid extension/compression is very low (or the same in both directions), replace the shock absorbers as a set.

Coil Spring
Removal/Installation

Refer to **Figure 5** (typical) for this procedure.
1. Set the parking brake and securely block both rear wheels so the truck will not roll in either direction. Raise the front of the vehicle with a jack and place it on jackstands. Position the jackstands under the frame, with the jack located under the axle.
2. Remove the nut holding the lower retainer to the spring slot. Remove the lower retainer.
3. Slowly lower the axle as far as it will go to remove spring tension without stretching the brake caliper hose and tube assembly. If necessary, remove the brake caliper and wire it to the

suspension out of the way. See *Caliper Removal/Installation*, Chapter Thirteen.
4. Insert a long pry bar between the 2 axles. Apply pressure on the pry bar to force the appropriate I-beam axle down enough to permit lifting the spring over the bolt that passes through the lower spring seat.
5. Rotate the spring until the upper spring seat retainer is cleared. Remove the spring.
6. Installation is the reverse of removal. Tighten all fasteners to specifications (**Table 1**). Remove the jack and jackstands and lower the vehicle to the ground.

Stabilizer Bar
Removal/Installation
(Ranger)

1. Set the parking brake and securely block both rear wheels so the truck will not roll in either direction. Raise the vehicle with a jack and place it on jackstands.
2. Remove the nuts and U-bolts holding the lower shock absorber/stabilizer bar bushings to the radius arms.
3. Remove the stabilizer mounting bracket on each side of the vehicle.
4. Remove the stabilizer bar and bushings.
5. Installation is the reverse of removal. Tighten all fasteners to specifications (**Table 1**). Remove the jackstands and lower the vehicle to the ground.

Stabilizer Bar
Removal/Installation
(Bronco II)

1. Set the parking brake and securely block both rear wheels so the truck will not roll in either direction. Raise the vehicle with a jack and place it on jackstands.
2. Disconnect the stabilizer link at each I-beam axle. See **Figure 6**.
3. Remove the stabilizer mounting bracket on each side of the vehicle.
4. Remove the stabilizer bar and bushings.
5. Installation is the reverse of removal. Tighten all fasteners to specifications (**Table 1**). Remove the jackstands and lower the vehicle to the ground.

Radius Arm
Removal/Installation

Refer to **Figure 7** for this procedure.
1. Raise the front of the vehicle with a jack and place it on jackstands. Position the jackstands under the frame, with the jack under the front axle.

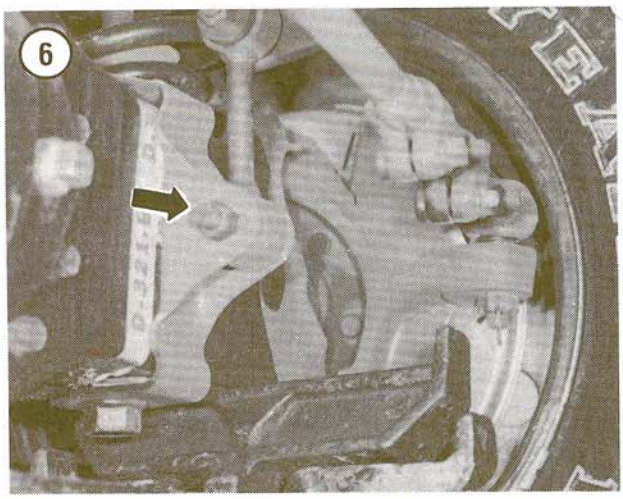

7

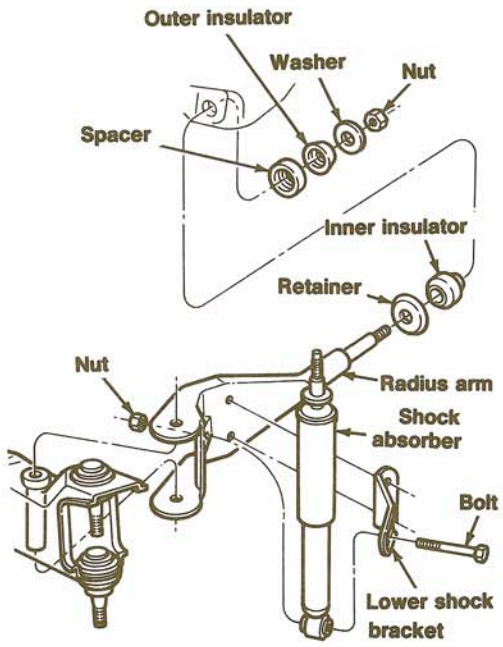

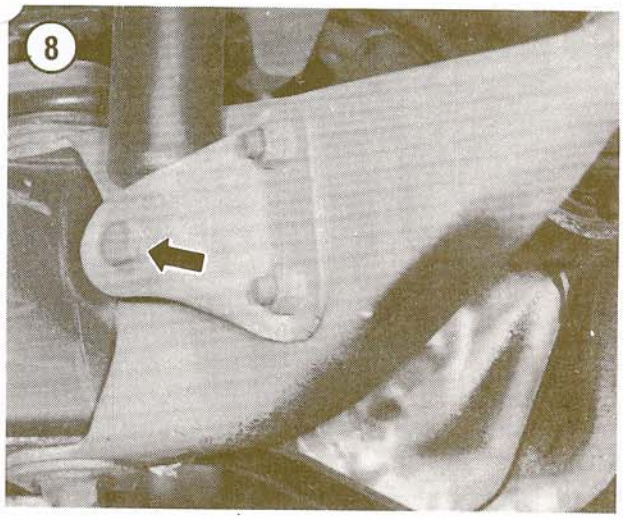

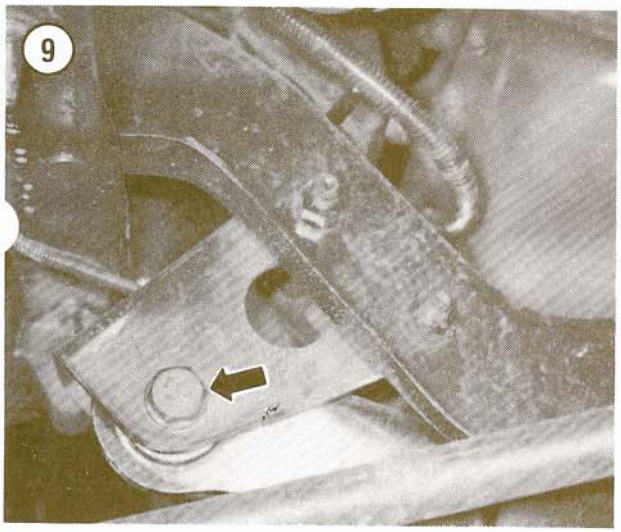

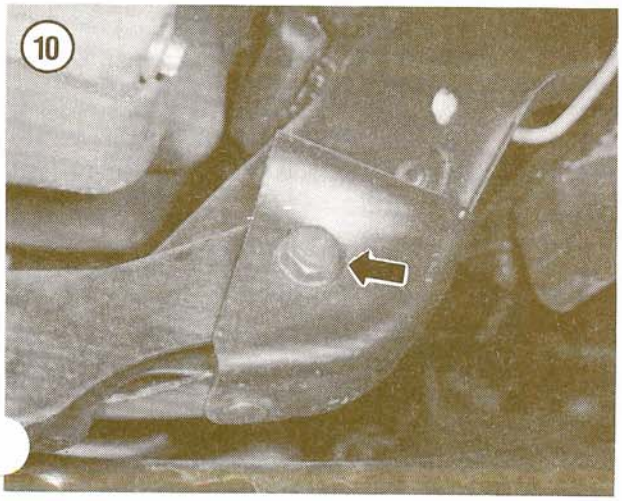

2. Remove the lower shock absorber mounting bolt and nut from the shock absorber bracket (**Figure 8**).
3. Remove the coil spring as described in this chapter.
4. Loosen the axle pivot bracket bolt. See **Figure 9** for the left-hand axle bolt and **Figure 10** for the right-hand axle bolt.
5. Remove the spring lower seat from the radius arm.
6. Remove the bolt and nut holding the radius arm to the axle and front bracket. See **Figure 11**.
7. Remove the nut, rear washer and insulator from the radius arm rear bracket (**Figure 12**).
8. Remove the radius arm from the vehicle. Remove the inner insulator and retainer from the radius arm stud.
9. Installation is the reverse of removal. Tighten all fasteners to specifications (**Table 1**). Remove the jack and jackstands and lower the vehicle to the ground.

Radius Arm Insulator Replacement

Refer to **Figure 7** for this procedure.
1. Set the parking brake and securely block both rear wheels so the truck will not roll in either direction. Raise the vehicle with a jack and place it on jackstands.
2. Loosen the axle pivot bracket bolt (**Figure 9** or **Figure 10**).
3. Remove the nut and washer holding the radius arm to its rear bracket (**Figure 11**).

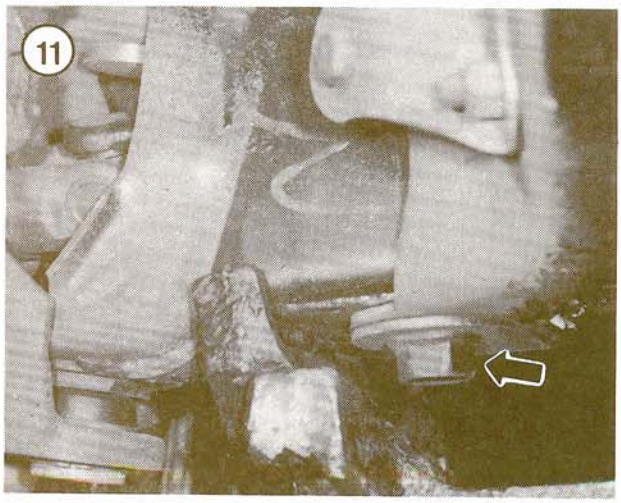

4. Remove the outer insulator, spacer and shield (right arm only). See **Figure 12**.
5. Push the radius arm and axle assembly forward and take the arm out of the bracket. Remove the inner insulator and retainer.
6. Installation is the reverse of removal. Support the vehicle at the front springs before tightening the axle pivot bracket bolt and nut. Tighten all fasteners to specifications (**Table 1**).

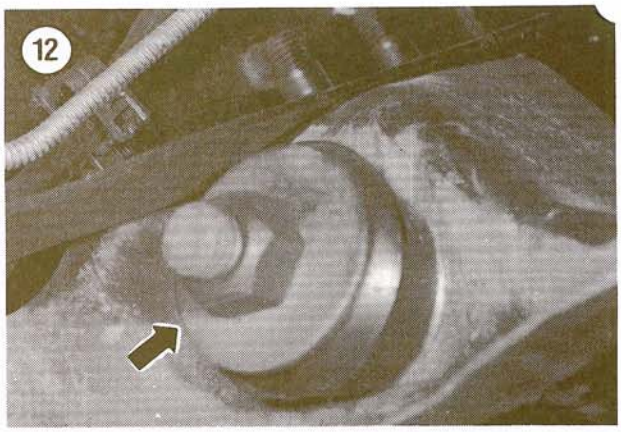

Front Wheel Spindle Removal

Refer to **Figure 13** (Ranger) or **Figure 14** (Bronco II) for this procedure.

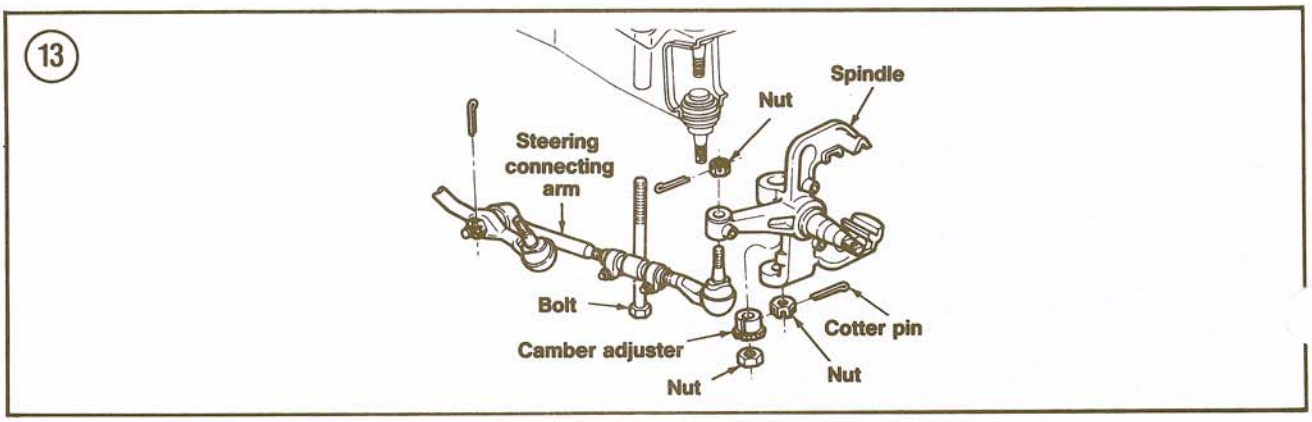

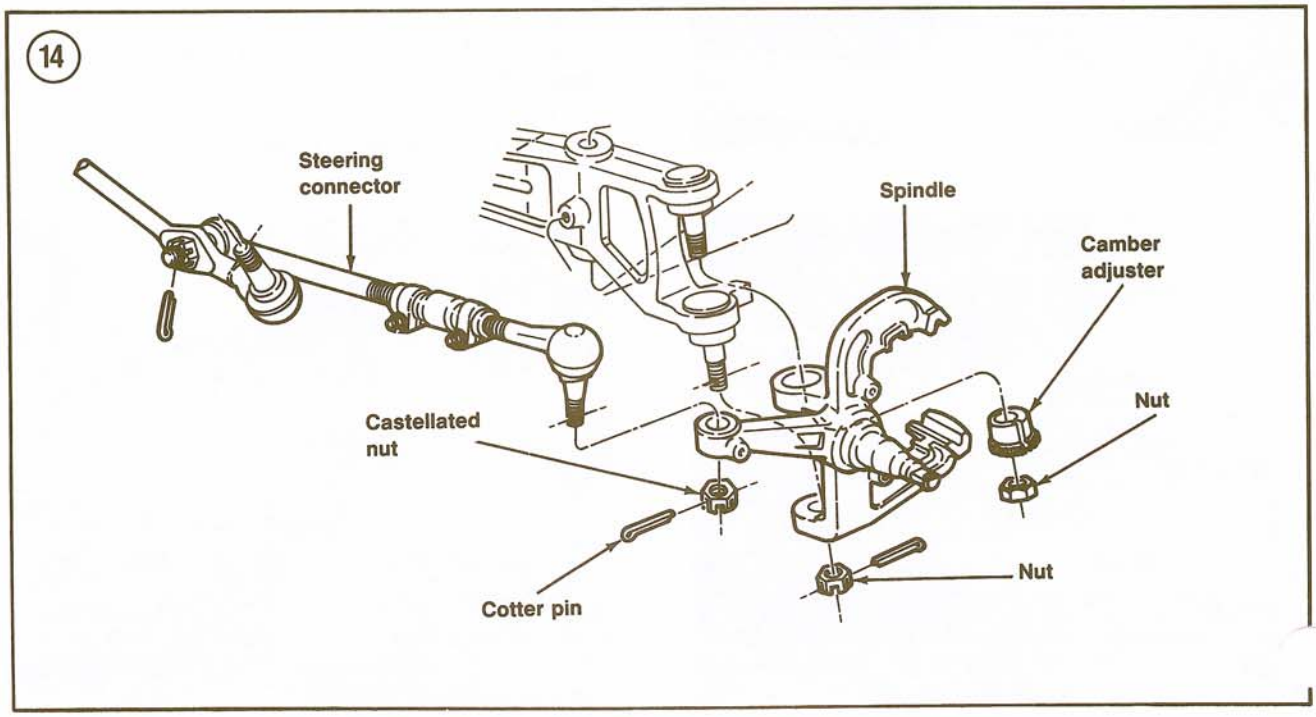

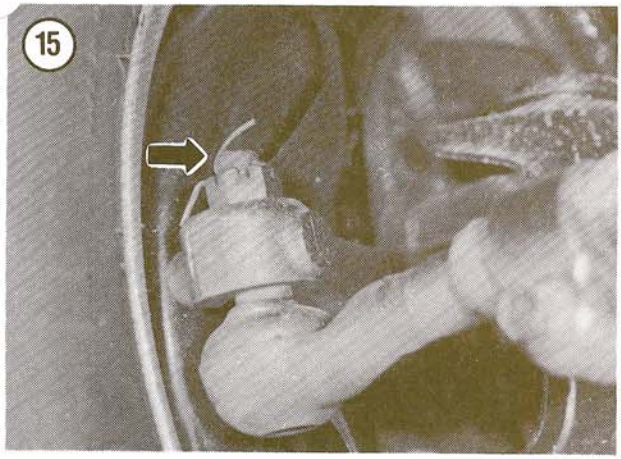

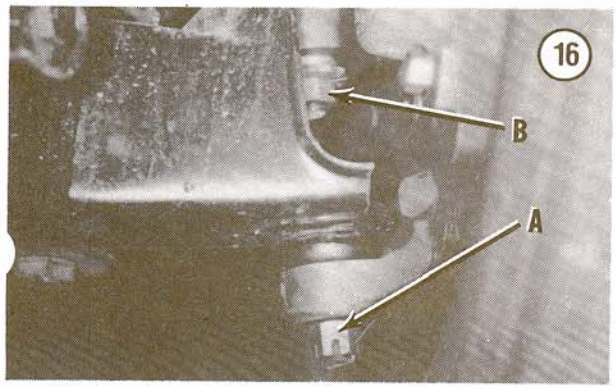

1. Set the parking brake and securely block both rear wheels so the truck will not roll in either direction. Remove the wheel covers (if so equipped) and loosen the wheel lug nuts.
2. Set the parking brake and securely block both rear wheels so the truck will not roll in either direction. Raise the front of the vehicle with a jack and place it on jackstands.
3. Remove the wheel and tire assembly.
4. Remove the brake caliper (Chapter Thirteen). Wire the caliper to the frame out of the way.
5. Remove the hub and rotor as described in this chapter. Remove the brake splash shield (Chapter Thirteen).
6. Remove and discard the tie rod-to-spindle cotter pin. Remove the castellated nut (**Figure 15**).
7. Remove and discard the cotter pins from the upper and lower ball-joints (**Figure 16**). Remove the upper ball-joint castellated nut. Loosen but do not remove the lower ball-joint nut.

CAUTION

Do not use a fork-type tool to separate the spindle and ball-joint. It will damage the ball-joint socket and seal.

8. Strike the lower side of the spindle to pop the ball-joints free from the spindle. See **Figure 17**.
9. Remove the camber adjusting sleeve with tool part No. D81T-3010-B. See **Figure 18**. Carefully note the positioning of the sleeve slot for reinstallation reference.
10. Remove the lower ball-joint nut. Remove the spindle.

Front Wheel Spindle Installation

Refer to **Figure 13** (Ranger) or **Figure 14** (Bronco II) for this procedure.
1. Make sure the ball-joint seals are in place.

NOTE

If camber adjustment is required, special adapters must be installed. Adapters are available in 1/2 degree increments from 0° to 1 1/2°. See your Ford dealer.

2. Install the camber adjusting sleeve over the upper ball-joint stud. Position the slot as noted during removal. Fit the stud and sleeve into the spindle.
3. Apply Loctite 242 or equivalent to the upper and lower ball-joint studs, then fit the spindle over the ball-joints.
4. Install the lower ball-joint stud nut and partially tighten to 35 ft.-lb. (47 N•m).
5. Install the upper ball-joint stud nut and tighten to specifications (**Table 1**). If cotter pin hole in nut does not align with hole in stud, tighten nut to align holes and install a new cotter pin.
6. Tighten the lower ball-joint stud nut to specifications (**Table 1**). If cotter pin hole in nut does not align with hole in stud, tighten nut to align holes and install a new cotter pin.
7. Install the brake dust shield, hub and rotor assembly. See Chapter Thirteen.
8. Adjust the wheel bearings as described in this chapter.
9. Install the brake caliper (Chapter Thirteen).
10. Connect the tie rod to the spindle. Install the castellated nut and tighten to specifications (**Table 1**). If cotter pin hole in nut does not align with hole in stud, tighten nut to align holes and install the cotter pin.

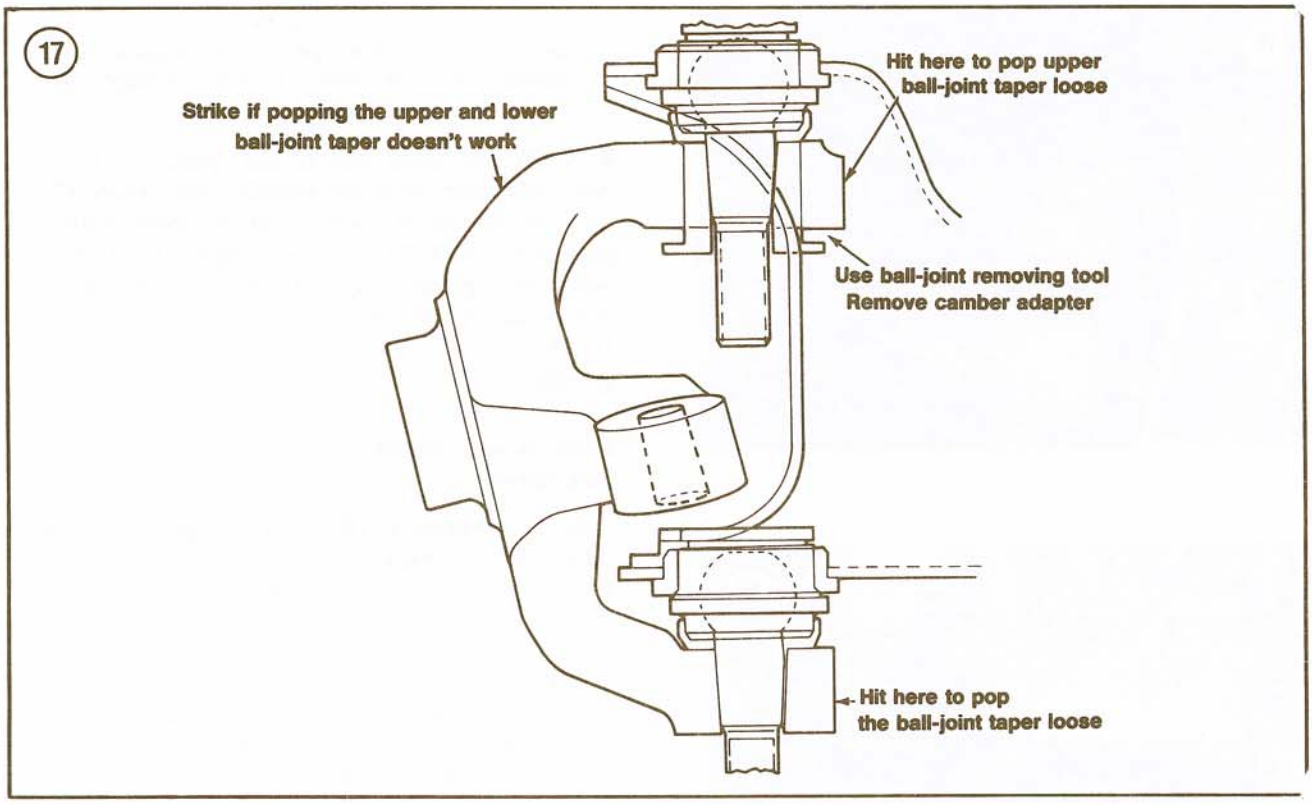
17
Hit here to pop upper ball-joint taper loose
Strike if popping the upper and lower ball-joint taper doesn't work
Use ball-joint removing tool Remove camber adapter
Hit here to pop the ball-joint taper loose

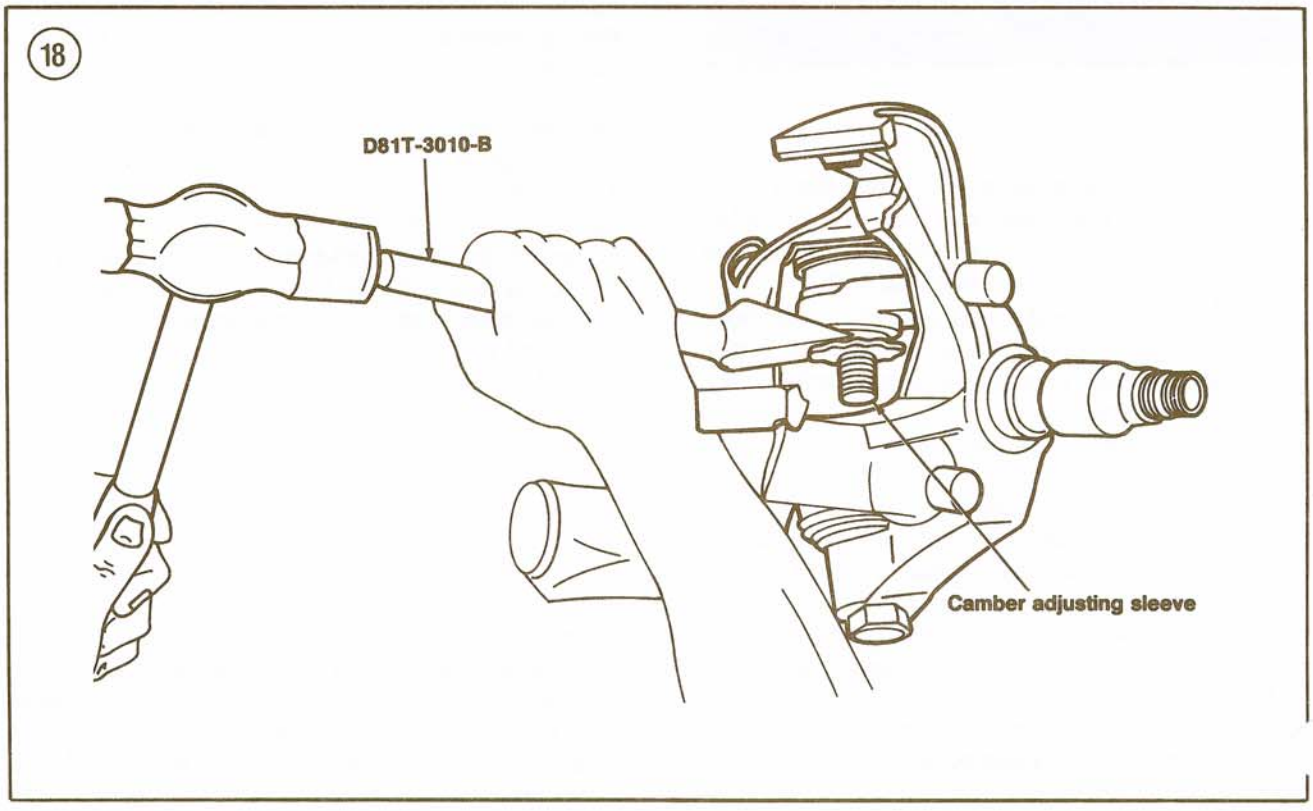
18
D81T-3010-B
Camber adjusting sleeve

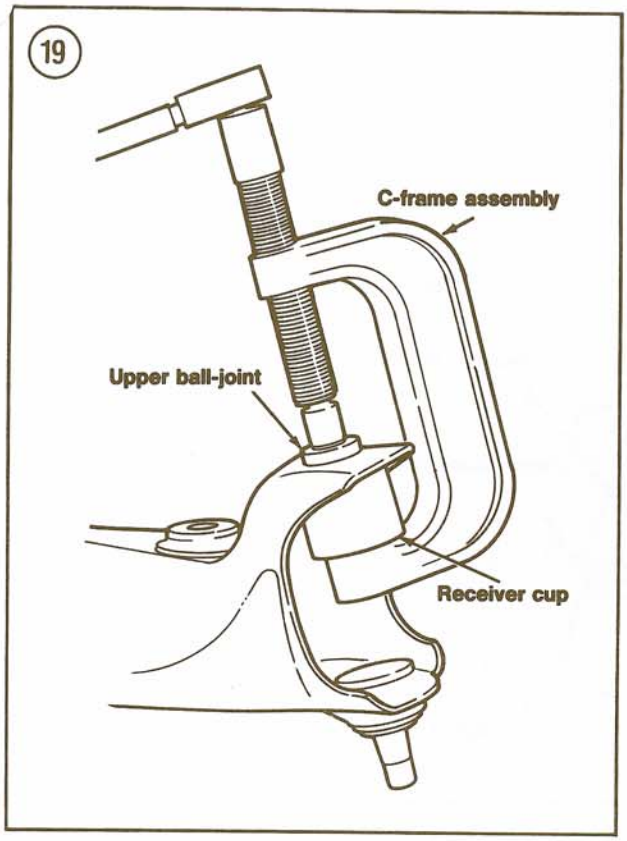

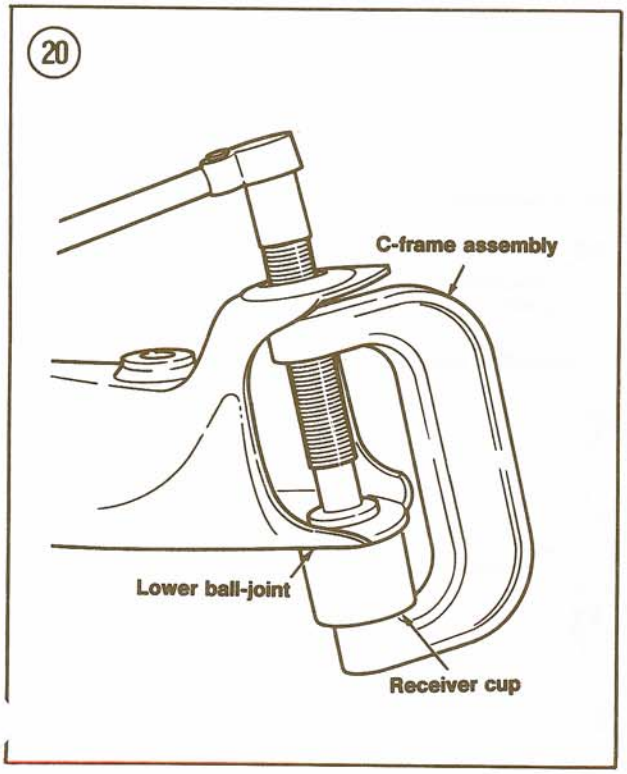

11. Install the wheel and tire assembly. Tighten wheel lug nuts finger-tight, then lower the vehicle to the ground and tighten the lug nuts to specifications (**Table 1**). Install the wheel covers, if used.
12. Have the alignment alignment checked by a Ford dealer or alignment shop.

Ball-joint Replacement

CAUTION
Do not heat the axle or ball-joint.

1. Remove the spindle as described in this chapter.
2. Remove the snap ring from the ball-joint(s) to be replaced.

NOTE
When replacing both ball-joints, remove the upper one first.

3. Assemble receiver cup part No. D81T-3010-A to a C-clamp as shown in **Figure 19** (upper ball-joint) or **Figure 20** (lower ball-joint). Tighten the clamp screw until the ball-joint is forced from the axle.

NOTE
When replacing both ball-joints, install the lower one first.

4. Assemble a C-clamp, receiver cup part No. T81T-3010-A5, installation cup part No. T81T-3010-A1 and adapter part No. T81T-3010-A4 as shown in **Figure 21** (lower ball-joint) or **Figure 22** (upper ball-joint). Tighten the clamp screw until the ball-joint is fully seated in the axle.
5. Install the spindle as described in this chapter.
6. Have alignment checked by a Ford dealer or alignment shop.

I-beam Axle
Removal/Installation

Refer to **Figure 23** (Ranger) or **Figure 24** (Bronco II) for this procedure.

1. Remove the coil spring and spindle as described in this chapter.
2. Remove the spring lower seat from the radius arm.
3. Remove the bolt and nut holding the radius arm to the front axle (**Figure 11**).

(21)

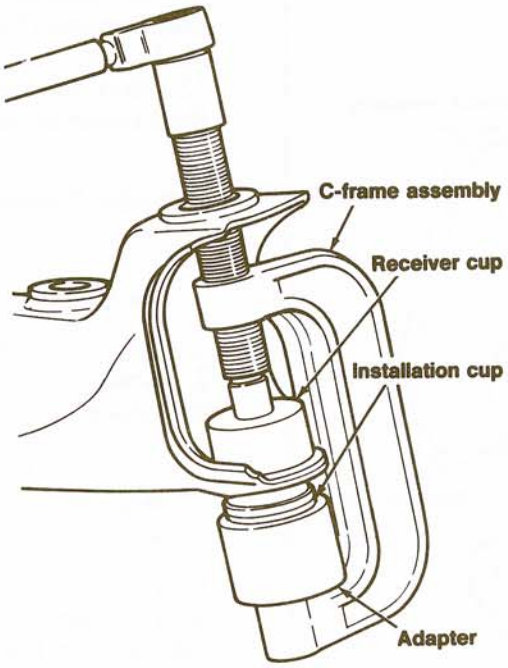
C-frame assembly
Receiver cup
Installation cup
Adapter

(22)

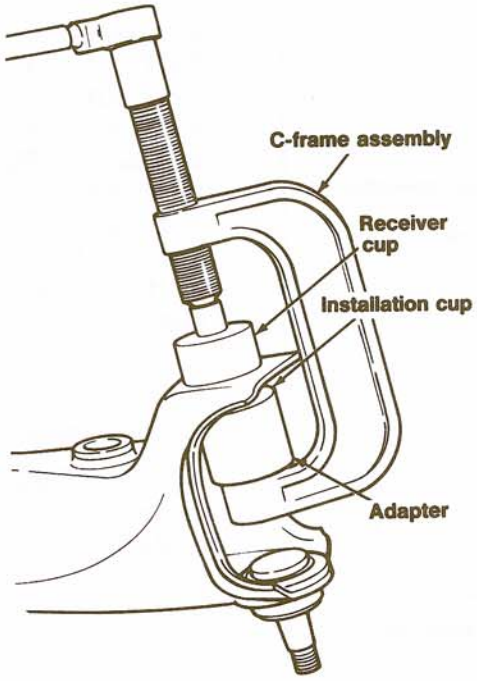
C-frame assembly
Receiver cup
Installation cup
Adapter

23

I-BEAM AXLE (RANGER)

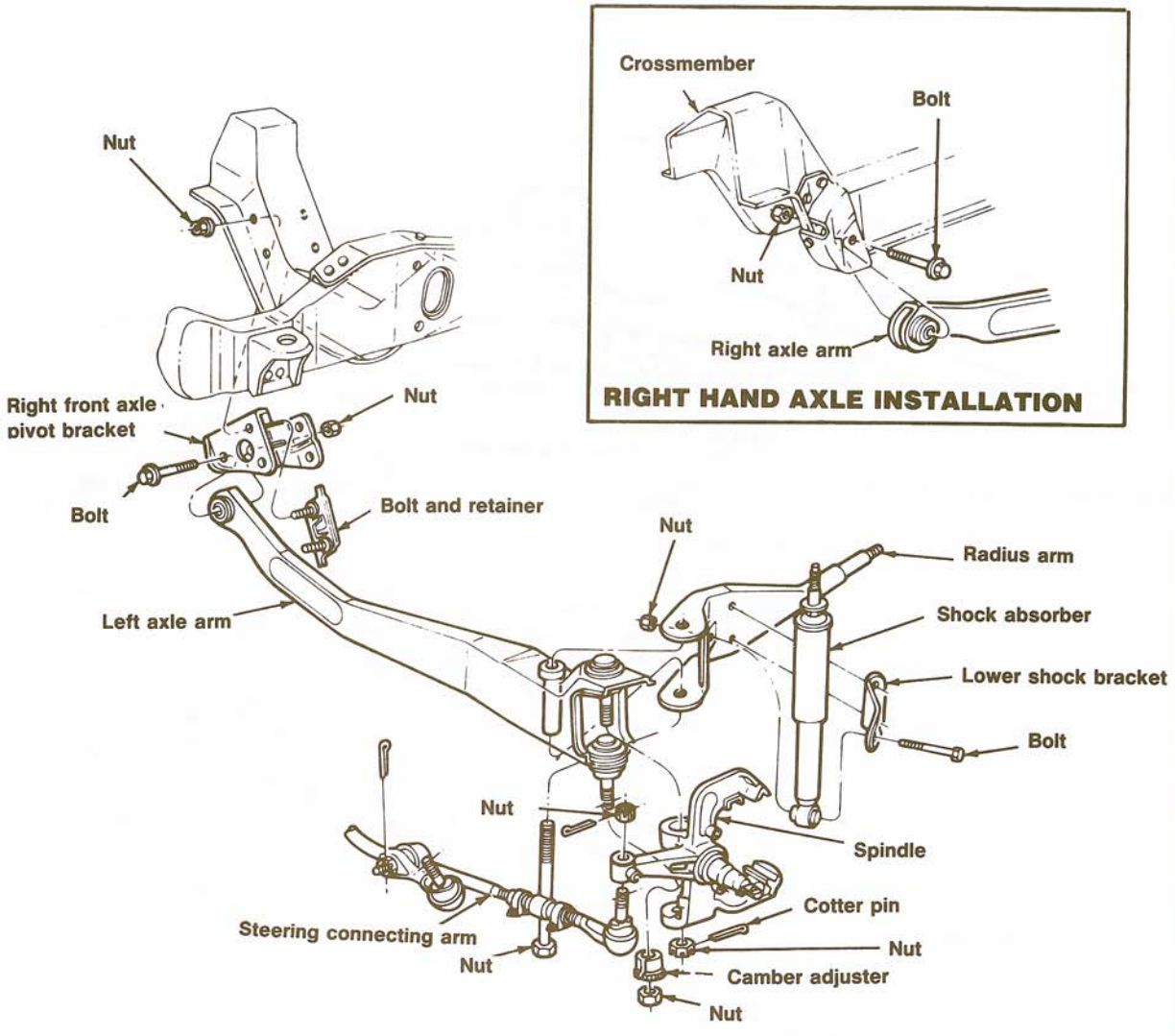

10

(24)

I-BEAM AXLE (BRONCO II)

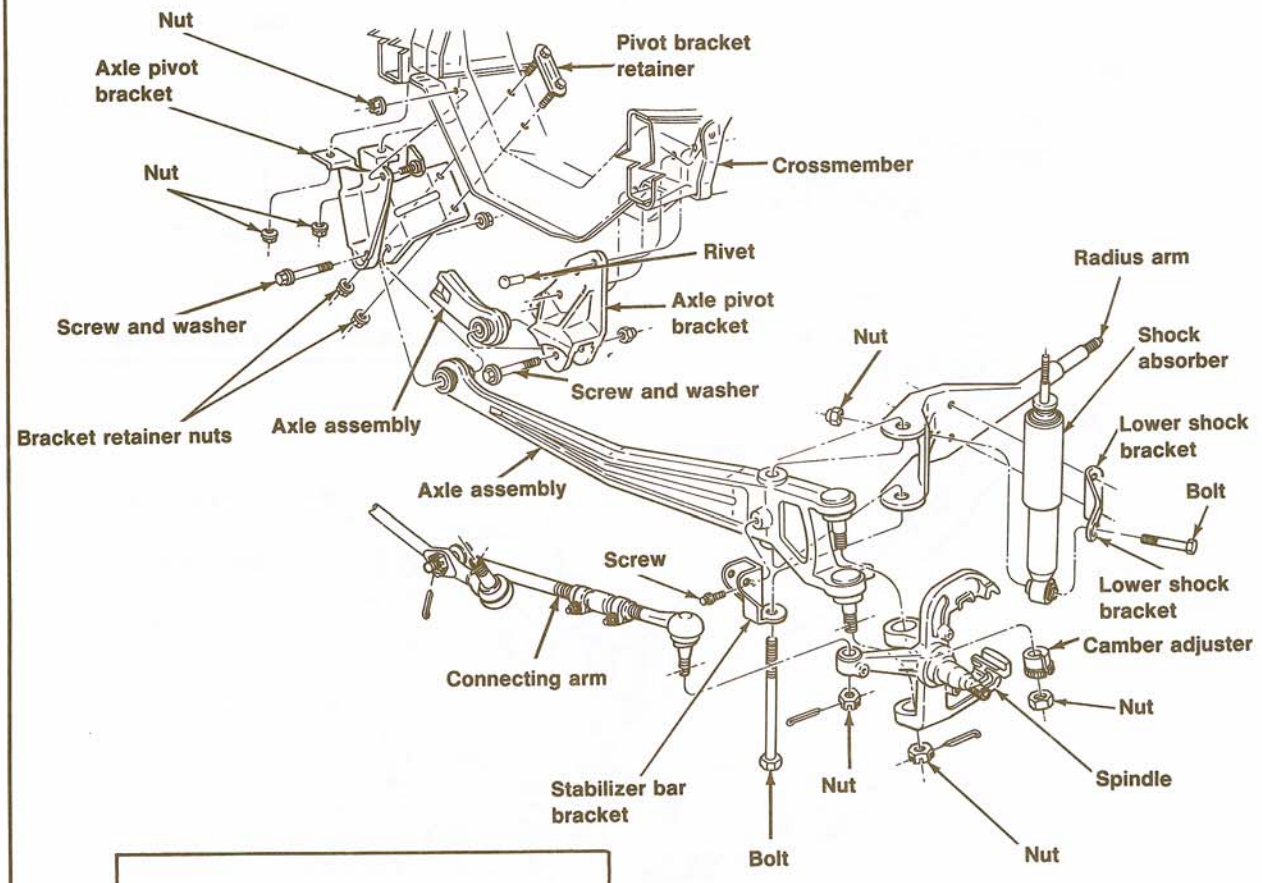

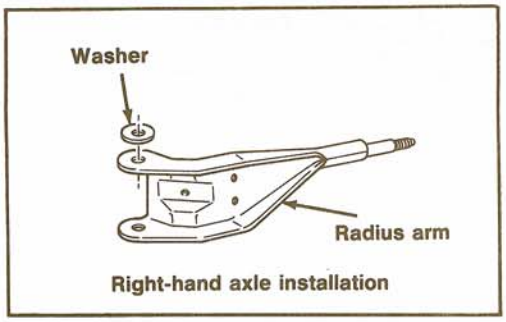

Right-hand axle installation

4. Disconnect the stabilizer bar at the I-beam axle, if so equipped.
5. Remove the axle-to-frame pivot bracket bolt. See **Figure 9** or **Figure 10**. Remove the axle.
6. Installation is the reverse of removal. Install the pivot bracket bolt finger-tight. Tighten the radius arm-to-axle bolt to specifications (**Table 1**), then support the vehicle at the front springs and tighten the axle pivot bracket bolt and nut. Have alignment checked by a Ford dealer or alignment shop.

Axle Pivot Bracket Removal/Installation

1. Remove the coil spring, radius arm, spindle and I-beam axles as described in this chapter.
2. Remove the pivot bracket fasteners. See **Figure 23** (Ranger) or **Figure 24** (Bronco II). Remove the axle pivot bracket.

NOTE

The nuts used to secure the pivot bracket bolts have a special undercut to provide clearance for bolt knurl. If the nuts must be replaced, install the special nuts or use a 0.20 in. (0.5 mm) thick hardened steel washer if ordinary nuts are installed.

3. Installation is the reverse of removal. Tighten all fasteners to specifications (**Table 1**). Have alignment checked by a Ford dealer or alignment shop.

Jounce Bumper Removal/Installation

The jounce bumper can be removed or installed by simply unbolting it from or bolting it to the frame. See **Figure 25**.

(25)

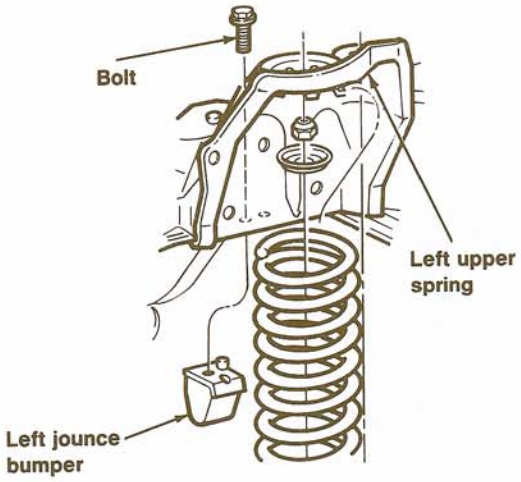

LEFT JOUNCE BUMPER

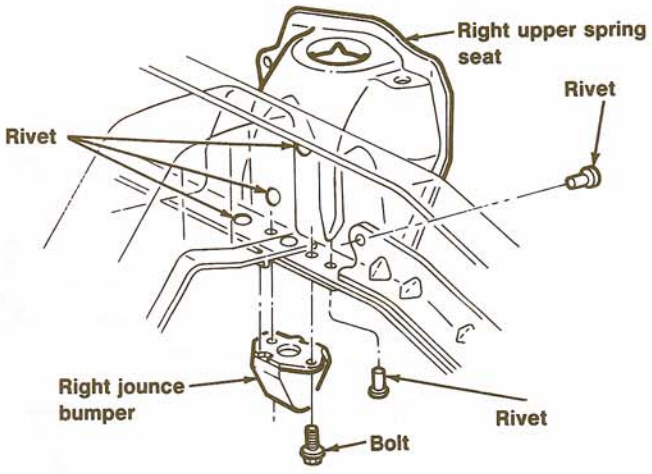

RIGHT JOUNCE BUMPER

10

WHEEL ALIGNMENT

Several suspension angles affect the running and steering of the front wheels. These angles must be properly aligned to prevent excessive wear, as well as to maintain directional stability and ease of steering. The angles are:

a. Caster.
b. Camber.
c. Toe.
d. Steering axis inclination.
e. Steering lock angles.

Steering axis inclination and steering lock angles are built in and cannot be adjusted. These angles are measured to check for bent suspension parts. Caster and camber are designed into the front axle and checked with the vehicle at its normal operating height. Caster is not adjustable. Camber is adjusted by replacing a camber adjuster sleeve installed in the spindle upper ball-joint bore. This camber angle should not be adjusted without a front-end rack. Toe can be adjusted at home as described in this section, but the procedure given should be used only as a temporary measure to allow you to drive the vehicle to a dealer or alignment shop where accurate measurements can be made and set.

WARNING

Do not attempt to adjust alignment angles by bending or twisting twin I-beam axles, suspension or steering linkage components.

Pre-Alignment Check

Adjustment of the steering and various suspension angles is affected by several factors. For this reason, steering and handling problems which may seem to be caused by misalignment can result from other factors which are easily corrected without expensive equipment. The following procedure should be carried out whenever steering, handling or tire wear problems exist. It should also be performed before having the alignment checked or prior to adjusting the toe setting.

1. Check tire pressure (with tires cold) and adjust to the specified pressure, if necessary. Both front

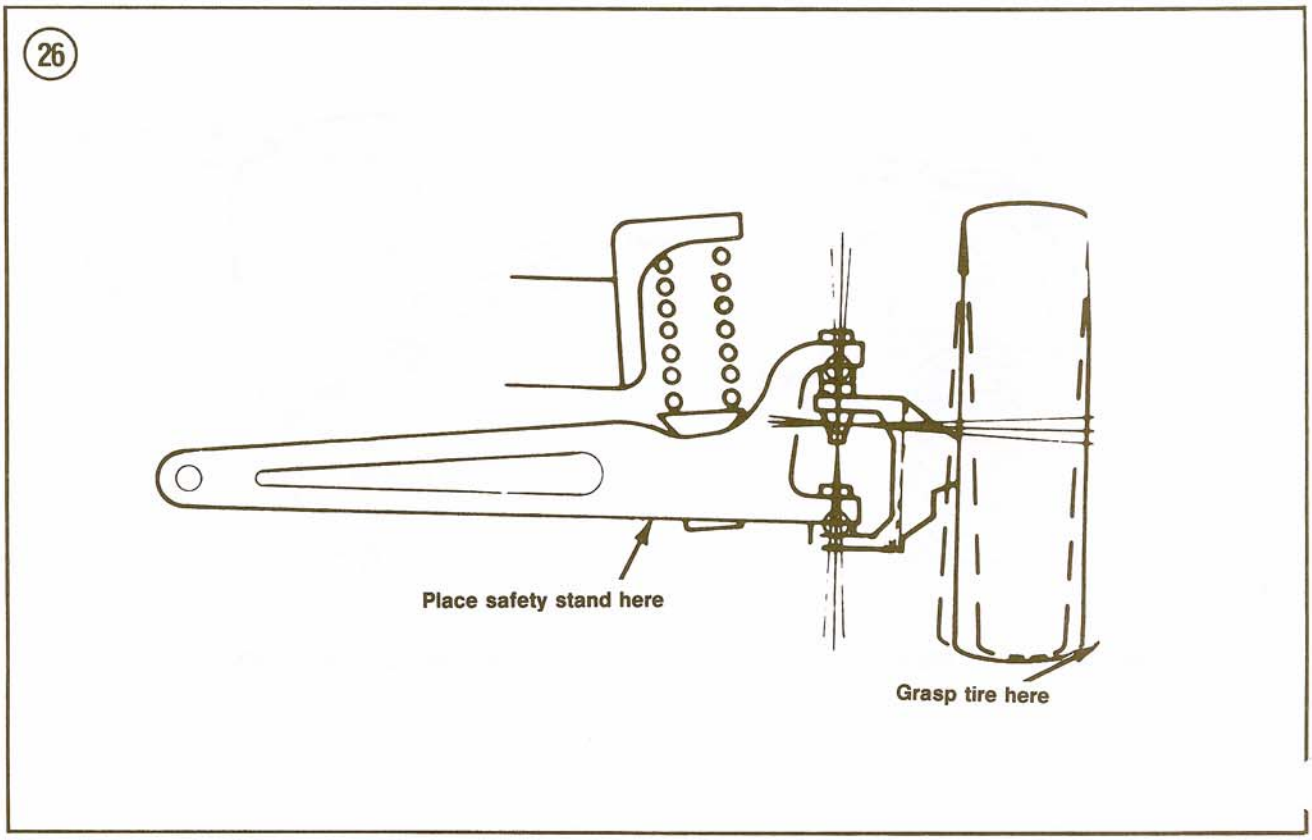

tires should be the same size, ply rating and load range.
2. Check tire condition. See *Tire Wear Analysis*, Chapter Two.
3. Raise the front of the vehicle with a jack to lift the wheels off the ground. Place jackstands beneath the I-beam axle under the coil spring (**Figure 26**). Grasp one tire at the front and rear. Push the wheel in and pull it out. If there is free play between the hub/disc and spindle, check and adjust the wheel bearings as described in this chapter. Repeat this step with the other front wheel.
4. With the wheels still off the ground, grasp one tire at the bottom and move it in and out while watching the lower spindle arm and axle jaw. See **Figure 26**. If the spindle moves more than 1/32 in. at the bottom relative to the axle, replace the spindle lower ball-joint as described in this chapter.
5. Repeat Step 4 but grasp the tire at the top and move it in and out while watching the upper spindle arm and axle jaw. If spindle movement exceeds 1/32 in. at the top relative to the axle, replace the upper ball-joint as described in this chapter.
6. Check the radial and lateral runout of both front tires with a dial indicator. Place the indicator plunger against the tire tread and slowly rotate the wheel. Then position the indicator against the outer sidewall of the tire and slowly rotate the wheel. If either the radial or lateral runout exceeds 0.080 inch:
   a. Deflate the tire.
   b. Rotate the tire 90° on the rim.
   c. Lubricate the rim with liquid soap.
   d. Reinflate the tire to the specified pressure.
   e. Recheck runout.
   f. If runout is still excessive, check for foreign material between the wheel and hub.
   g. If runout is still excessive, check for a bent wheel. If the wheel is good, replace the tire.
7. Check all suspension and steering components, for wear, damage or improper adjustment. Replace if required as described in this chapter.
8. Check the steering gearbox mounting bolt torque. Retighten as required.
9. Check the radius arm and bushings for wear or damage. Replace if required as described in this chapter.
10. Make sure the suspension is properly lubricated. See Chapter Three.
11. Check brakes for proper operation. See Chapter Thirteen.
12. Check the shock absorbers for proper operation as described in this section.
13. Check wheels and balance as required.
14. Check rear suspension for looseness.

Front tire wear problems can indicate alignment problems. These are covered under *Tire Wear Analysis*, Chapter Two.

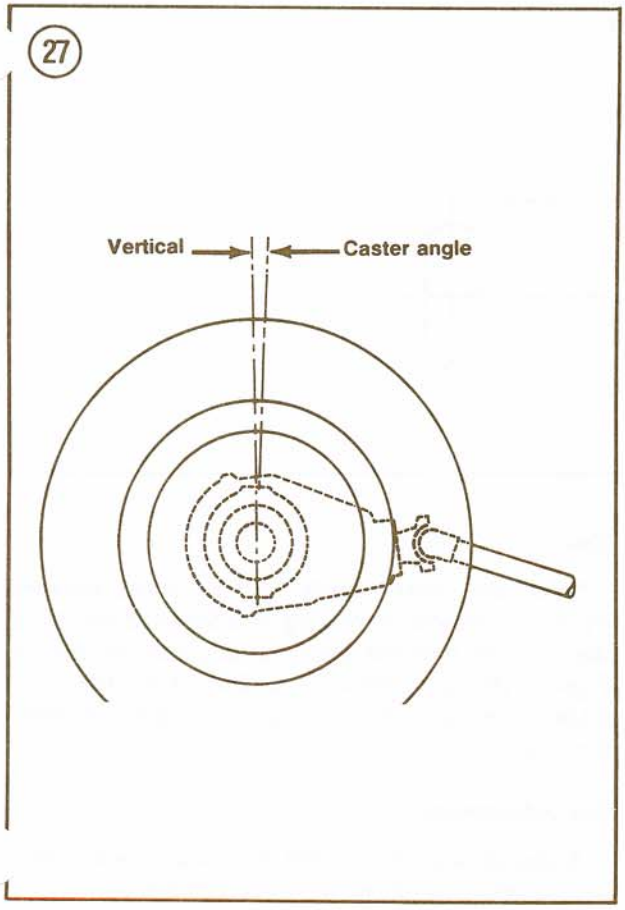

Caster and Camber

Caster is the inclination from vertical of the line through the ball-joints (**Figure 27**). Positive caster shifts the wheel forward; negative caster shifts the wheel rearward. Caster causes the wheels to return to a straight-ahead position after a turn. It also prevents the wheels from wandering due to wind, potholes or uneven road surfaces.

The caster angle is designed into the Ranger/Bronco II front axle and cannot be adjusted.

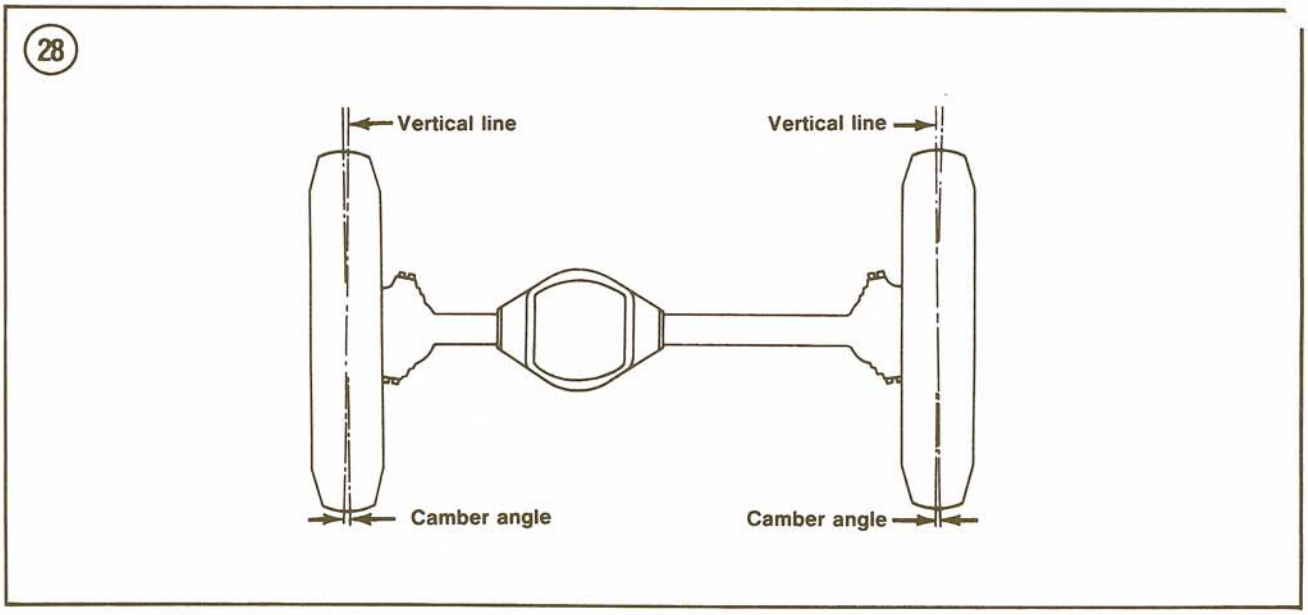

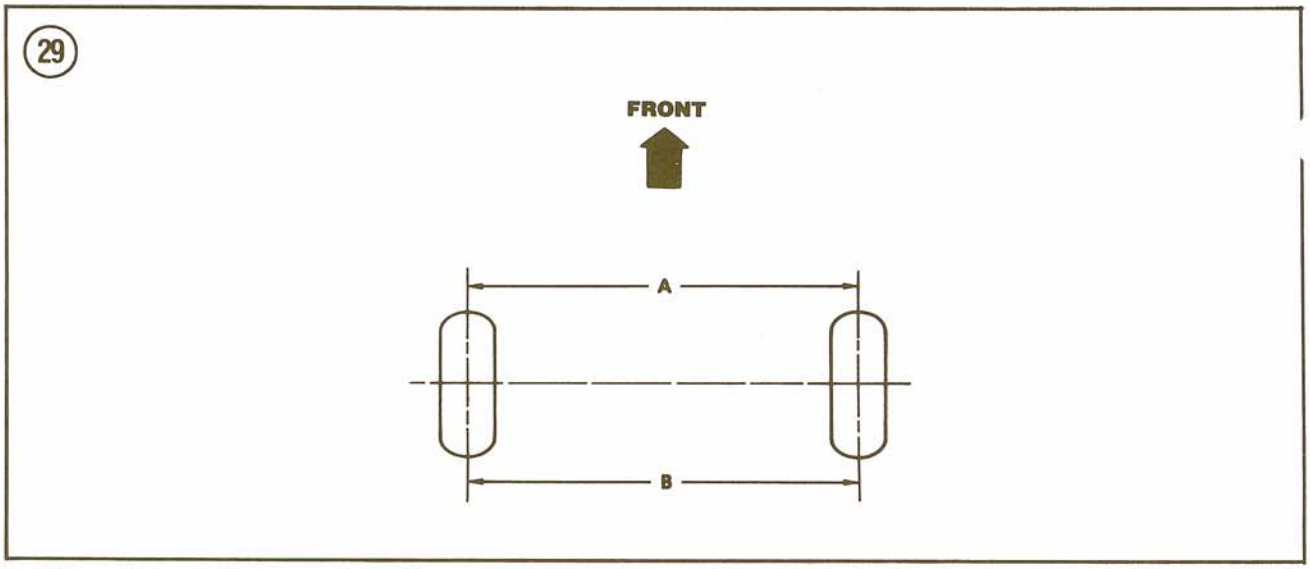

Camber is the inclination of the wheel from vertical (**Figure 28**). With positive camber, the top of the tire leans outward. With negative camber, the top of the tire leans inward. Excessive camber causes tire wear. Negative camber wears the inside of the tire; positive camber wears the outside.

Camber adjustment requires the use of an alignment rack and special tools. It should not be attempted by the home mechanic. Whenever the spindle is removed and installed as described in this chapter, take the vehicle to a Ford dealer or alignment shop for camber adjustment.

Toe

Since the front wheels tend to point outward when the vehicle is moving in a forward direction, the distance between the front edges of the tire (A, **Figure 29**) is generally slightly less than the distance between the rear edges (B, **Figure 29**) when the vehicle is at rest.

Toe Adjustment

Although toe adjustment requires only a simp homemade tool, it usually is not worth the trouble

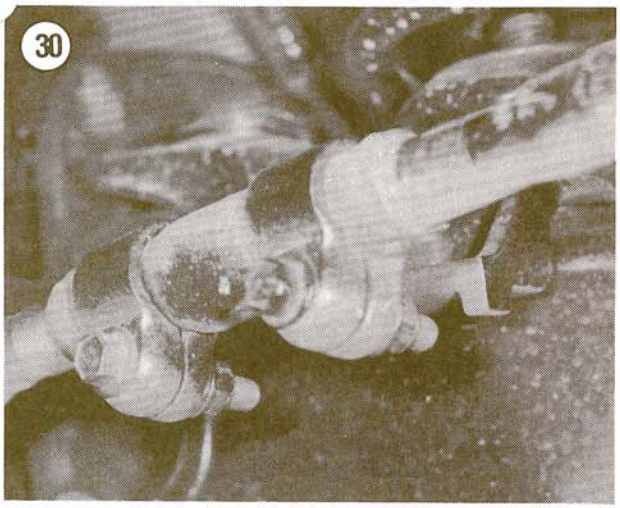

for home mechanics. Alignment shops include toe adjustment as part of the alignment procedure, so you probably will not save any money by doing it yourself. The procedure described here can be used for an initial toe setting after spindle or ball-joint replacement.

1. With the steering wheel centered, roll the vehicle forward about 15 ft. on a smooth, level surface.
2. Mark the center of the tread at the front and rear of each tire.
3. Measure the distance between the forward chalk marks (A, **Figure 29**). Use 2 pieces of telescoping aluminum tubing. Telescope the tubing so each end contacts a chalk mark. Using a sharp center scribe, mark the small diameter tubing where it enters the large diameter tubing.
4. Measure between the rear chalk marks with the telescoping tubes. Make another mark on the small tube where it enters the large one. The distance between the 2 scribe marks is the toe-in and must be divided in half to determine the amount of toe at each wheel.
5. If toe-in is incorrect, loosen the clamp bolts on each end of the tie rod adjusting sleeve (**Figure 30**) at each wheel.
6. Rotate each adjusting sleeve as required until correct toe alignment is obtained.
7. Reposition the clamps if necessary. They should be located 3/16 in. from the end of the sleeve with the nut end of the bolt facing the front of the vehicle.
8. When the toe is correctly set, tighten the clamp bolts to specifications (**Table 1**).

Steering Axis Inclination

Steering axis inclination is the inward or outward lean of the line through the ball-joints. It is not adjustable.

Steering Lock Angles

When a vehicle turns, the inside wheel makes a smaller circle than the outside wheel. Because of this, the inside wheel turns at a greater angle than the outside wheel. These angles are not adjustable, but are mesured to check for bent suspension and steering parts.

WHEEL BEARINGS

The front wheels use adjustable tapered roller bearings which must be cleaned, repacked with grease and adjusted at periodic intervals. A grease retainer at the inner end of the hub prevents lubricant from leaking onto the brake rotor. A retainer locknut and cotter pin hold the entire assembly on the spindle.

The factory-recommended service intervals (Chapter Three) refer to vehicle useage in dry weather on good roads. If the vehicle is used off-road (but not in water), a service interval of 6,000-10,000 miles is more appropriate. For vehicles operated in deep water or mud, the bearings should be serviced daily.

The rear wheel bearings are sealed and receive their lubrication from the oil carried in the rear differential. There is no adjustment required for the rear bearings.

Front Wheel Bearing Adjustment

Refer to **Figure 31** for this procedure.

1. Set the parking brake and securely block both rear wheels so the truck will not roll in either direction. Remove the wheel covers, if so equipped.
2. Raise the front of the vehicle with a jack and place it on jackstands.
3. Carefully pry the grease cap from the hub and wipe the grease from the end of the spindle.
4. Remove and discard the cotter pin in the retaining nut lock. Remove the nut lock.
5. Loosen the adjusting nut 3 full turns. Move the wheel in and out several times to move the brake disc away from the rotor. If the caliper linings cannot be moved away from the rotor to provide running clearance, it will be necessary to remove the caliper (Chapter Thirteen).

(31)

FRONT WHEEL BEARINGS (2-WHEEL DRIVE)

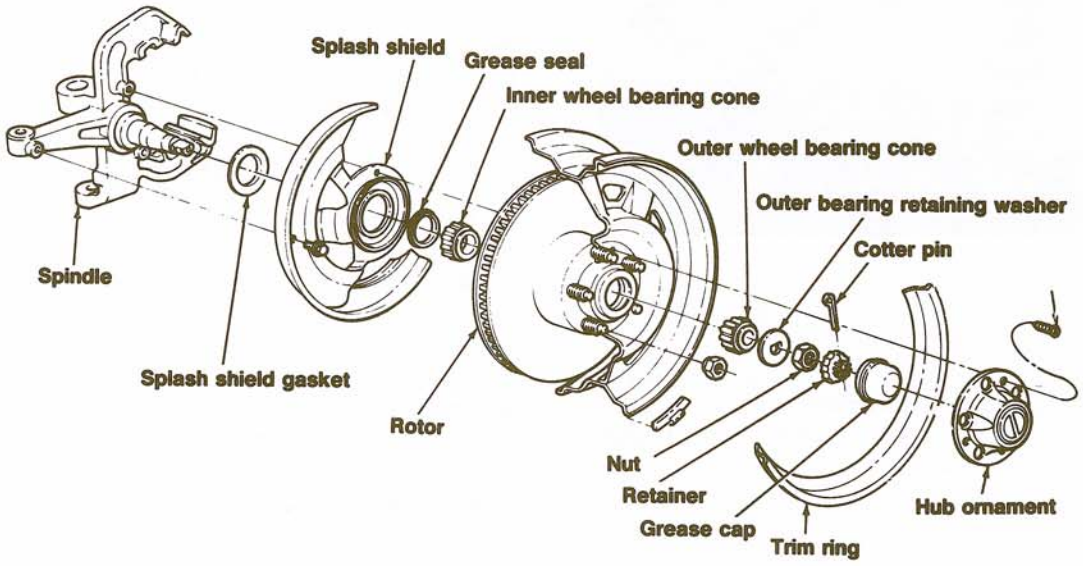

6. Rotate the wheel in a forward direction while tightening the adjusting nut to 17-25 ft.-lb. (23-34 N•m) to seat the bearings.
7. Loosen the adjusting nut one-half turn, then retighten to 10-15 in.-lb. (1.1-1.7 N•m).
8. Install the retaining nut lock on the spindle. Align the castellations in the nut lock with the cotter pin hole in the spindle.
9. Install a new cotter pin without bending the ends around the nut lock flange.
10. Rotate the wheel to make sure that it turns smoothly. Make sure there is no appreciable end play. If the wheel is still loose or if its rotation is noisy or rough, remove the bearings and cups to check for dirt, damage or excessive wear.
11. When bearing adjustment is satisfactory, bend the ends of the cotter pin over to lock it in place and reinstall the grease cap by lightly tapping in place with a soft-faced hammer.
12. Install the wheel cover, it used.
13. Reinstall the brake caliper, if removed (Chapter Thirteen).
14. Remove the jackstands and lower the vehicle to the ground.
15. Pump the brake pedal several times to restore normal brake pedal travel.

Front Wheel Bearing Replacement

If rough and noisy operation or looseness is not eliminated by adjustment, the wheel bearings should be removed, cleaned, inspected and repacked with the specified lubricant or replaced as required.

A lithium-base grease such as Ford Multi-purpose Long-life lubricant or equivalen should be used. Do not use other types of grease, as

.ney are not compatible and can result in premature bearing failure.

Refer to **Figure 31** for this procedure.

1. Perform Steps 1-4 of *Front Wheel Bearing Adjustment* in this chapter.
2. Remove the adjusting nut and flat retaining washer from the wheel spindle.
3. Pull the rotor forward about one inch, then push it back on the spindle. This will loosen the outer bearing so it can be removed easily. Remove the outer bearing.
4. Remove the rotor from the spindle, together with the inner wheel bearing and grease seal.
5. Pry the old grease seal from the center of the rotor with a suitable screwdriver. Discard the seal and remove the inner wheel bearing.
6. Clean all parts thoroughly in solvent before inspection. Be sure all old grease is removed from the inner and outer bearings.
7. Check the bearing cups (outer races) for signs of wear, scoring, chipping, rust or a bluish tint that indicates overheating. If any of these defects are noted, use an appropriate size drift and remove the bearing cups gradually and evenly, tapping around the circumference of the cup.

CAUTION

If a bearing cup is replaced, the corresponding bearing must also be replaced.

8. Inspect the inner and outer bearing assemblies for rust, galling, wear and a bluish tint that indicates overheating. Rotate the bearings and check for roughness or excessive noise. Replace any suspect bearings, together with their corresponding bearing cups.
9. If the bearing cups were removed, drive new ones in place with a drift the same diameter as the cup. Be sure the bearing cup seats evenly in the hub.
10. Pack the hub with wheel bearing grease until the grease is flush with both bearing cups.
11. Pack the bearings with grease using a bearing packer, if possible. If this tool is not available, work as much grease as you can between the rollers with your hand. Put grease in one hand and drag the bearing through it several times.
12. Install the inner bearing in the rotor cup.
13. Wipe the grease seal lip with a light coat of grease. Position the seal over the inner bearing and drive it in place with a suitable installer until it is properly seated.
14. Install the rotor on the spindle, keeping the hub centered to prevent damage to the spindle threads or grease seal.
15. Install the outer bearing and flat retaining washer on the spindle. Seat the bearing in the rotor hub.
16. Install the adjusting nut finger-tight and adjust the wheel bearings as described in this chapter.

STEERING SYSTEM

Vehicles may be equipped with manual (non-power) or integral power steering. The steering system on all models with manual or integral power steering consists of the steering gearbox, Pitman arm, drag link, connecting rod and tie rods. In addition, models with integral power steering have a pump and connecting fluid lines.

The steering gearbox transfers steering wheel movements to the tie rod ends through the Pitman arm, drag link and connecting rod. The tie rods move the spindles to the desired steering angle.

10

Steering Linkage

Bent, distorted or otherwise damaged steering linkage should never be straightened and reused. Such components should be replaced with new ones. Any linkage with excessively loose ball-joints should also be replaced.

Figure 32 (2-wheel drive) shows the major steering linkage components.

Tie Rod, Connecting Rod and Drag Link Removal/Installation

Refer to **Figure 32** as required for this procedure.

1. Set the parking brake. Place the transmission in 1st gear (manual) or PARK (automatic).
2. Raise the front of the vehicle with a jack and place it on jackstands.
3. Make sure the steering wheel and front wheels are in the straight-ahead position.

(32)

STEERING LINKAGE (2-WHEEL DRIVE)

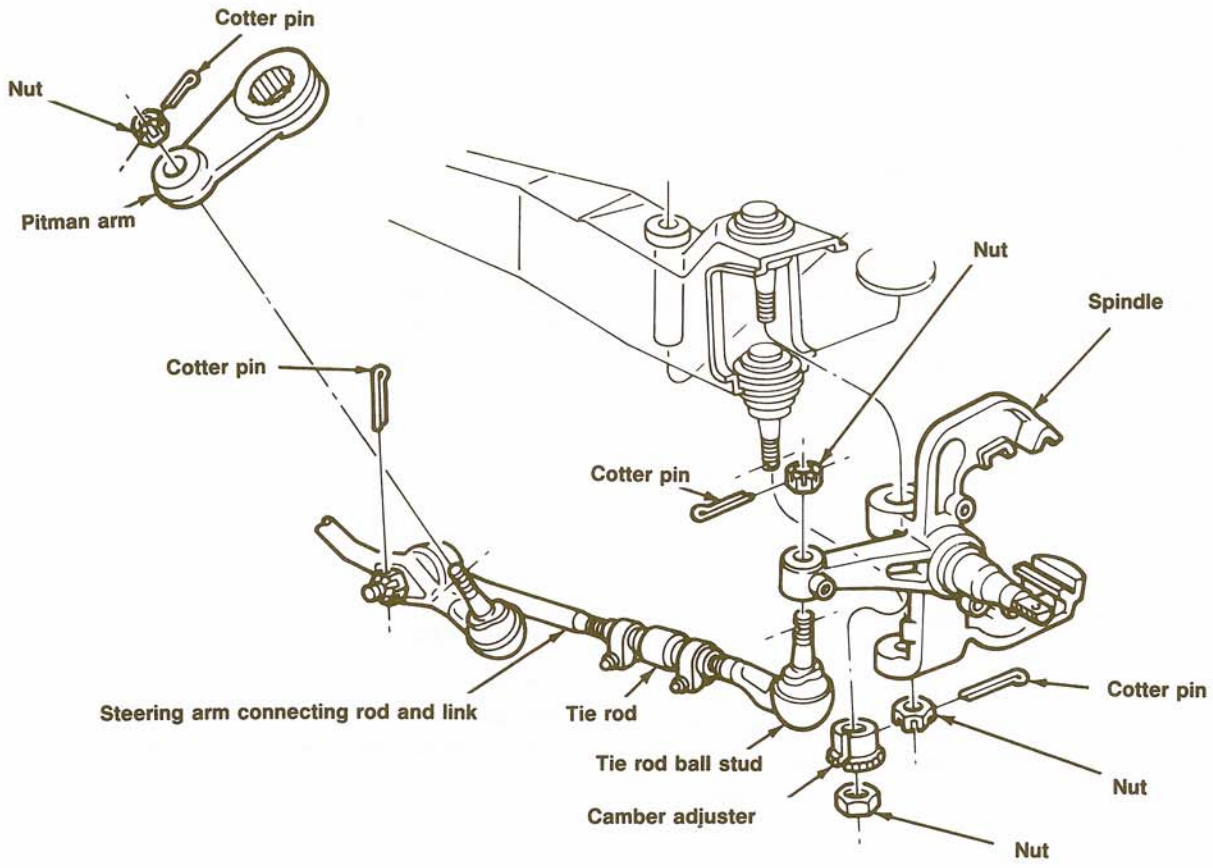

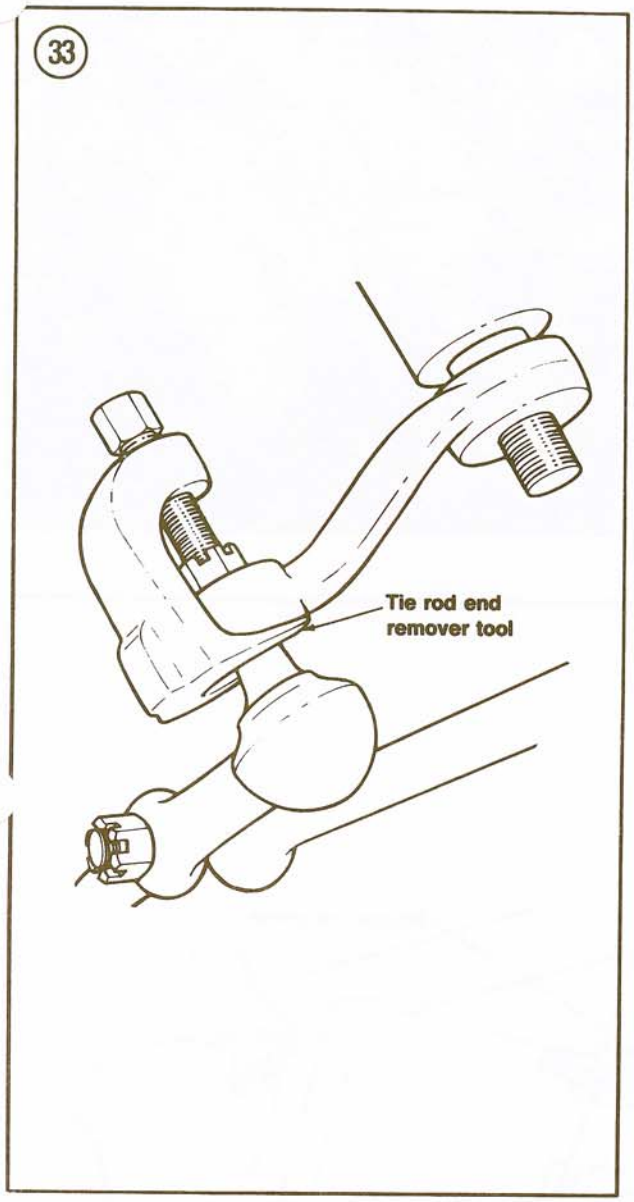

4. Remove and discard the cotter pins from the drag link and tie rod ball studs. Remove the ball stud nuts.
5. Use tie rod end remover part No. 3290-C (**Figure 33**) or a similar puller to separate the ball studs from the linkage.
6. Remove the linkage components from the vehicle.
7. If further service is required, clamp the tie rod or drag link (as required) in a vise with protective jaws. If protective jaws are not available, place the component between soft wooden blocks or wrap it in shop cloths before clamping it in the vise.
8. Loosen the adjusting sleeve clamps and unscrew the defective part. Note and record the number of turns required for removal.
9. If the components are to be reused, clean all threads with a wire brush. Lubricate the threads of all components to be reassembled with clean engine oil.
10. Installation is the reverse of removal, plus the following:
   a. Use new dust seals where appropriate.
   b. Reassemble components with the same number of turns required to disassemble them. This will provide an approximate toe adjustment.
   c. Tighten the ball stud nuts to specifications (**Table 1**). If the nut and ball stud holes do not align, further tighten the nut and install a new cotter pin through the nut and stud holes.
   d. Lubricate all grease fittings.
   e. Check and adjust tire pressures as required.
   f. Remove the jackstands and lower the vehicle to the ground.
   g. Have a dealer or wheel alignment shop check and adjust toe to specifications.

Pitman Arm
Removal/Installation

1. Set the parking brake. Place the transmission in 1st gear (manual) or PARK (automatic). Raise the front of the vehicle with a jack and place it on jackstands.
2. Make sure the steering wheel and front wheels are in the straight-ahead position.
3. Remove and discard the cotter pins from the drag link ball stud at the Pitman arm (A, **Figure 34**).
4. Remove the drag link ball stud with tie rod end remover part No. 3290-C (**Figure 33**) or a similar puller.
5. Remove the Pitman arm nut and washer (B, **Figure 34**).
6. Scribe alignment marks on the Pitman arm and steering gearbox shaft for reassembly reference.

CAUTION

Do not hammer on the puller in Step 7 to separate the Pitman arm from the steering gearbox shaft. This can cause internal damage to the steering gearbox.

7. Separate the Pitman arm from the steering gearbox shaft with puller part No. T64P-3590-F (**Figure 35**) or equivalent.

10

8. Installation is the reverse of removal, plus the following:
   a. Make sure the vehicle steering wheel and the front wheels are in the straight-ahead position.
   b. Make sure the ball stud seats in the linkage taper properly.
   c. Tighten the Pitman arm nut and ball stud nut to specifications (**Table 1**). If the nut and ball stud holes do not align, further tighten the nut and install a new cotter pin through the nut and stud holes.
   d. Check and adjust tire pressures as required.
   e. Remove the jackstands and lower the vehicle to the ground.
   f. Have a dealer or wheel alignment shop check and adjust toe to specifications.

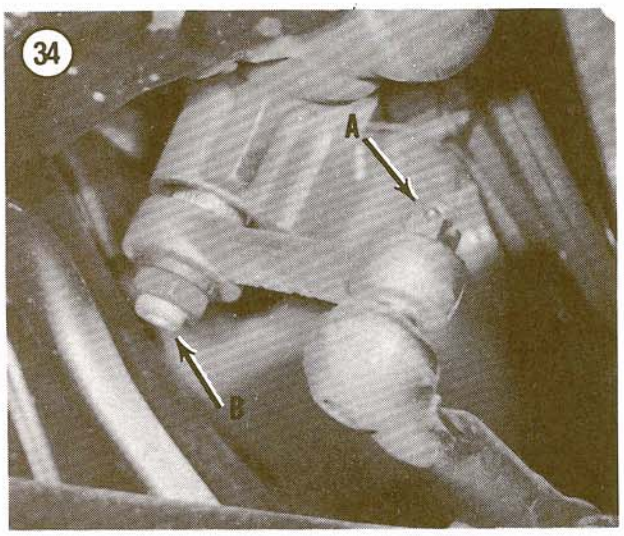

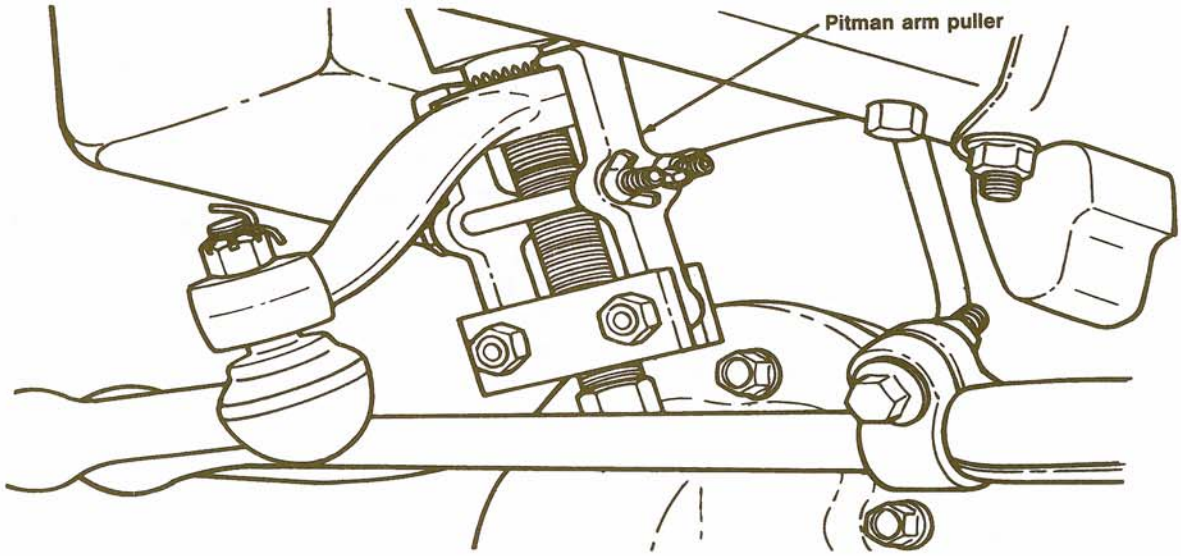

Manual Steering Gearbox Removal/Installation

Refer to **Figure 36** for this procedure.

1. Disconnect the flexible coupling from the steering gear input shaft. Slide the coupling up the intermediate shaft.
2. Remove the bolt holding the flexible coupling to the steering gear. Remove the steering gear input shaft shield.
3. Separate the Pitman arm from the steering gear shaft as described in this chapter.
4. Support the steering gearbox. Remove the attaching bolts. Remove the gearbox.
5. Installation is the reverse of removal. Count the turns required to rotate the gearbox input shaft from stop to stop. Rotate the shaft back halfway to center the gear. Tighten all fasteners to specifications (**Table 1**).

Power Steering Gearbox Removal/Installation

Refer to **Figure 37** for this procedure.

1. Disconnect and plug the pressure and return lines at the steering gearbox quick-disconnect fittings. Use a tube nut wrench to avoid possible nut deformation. Cap the ports in the gearbox.
2. Remove the upper and lower steering shaft U-joint shield from the flexible coupling.
3. Remove the flexible coupling bolt and disconnect the coupling at the steering gear.
4. Raise the vehicle with a jack and place it on jackstands.
5. Separate the Pitman arm from the steering gear shaft as described in this chapter.
6. Support the steering gearbox. Remove the attaching bolts.
7. Work the gearbox free from the flexible coupling. Remove the gearbox.
8. Installation is the reverse of removal, plus the following:
   a. Count the turns required to rotate the gearbox input shaft from stop to stop. Rotate the shaft back halfway to center the gear.
   b. Tighten all fasteners to specifications (**Table 1**).
   c. Disconnect the coil wire, crank the engine and fill the power steering pump with Type F automatic transmission fluid. Reconnect the coil wire, start the engine and run for several minutes. Rotate steering wheel from lock-to-lock. Turn engine off, recheck fluid level and top up, if necessary.

(36)

MANUAL STEERING GEARBOX

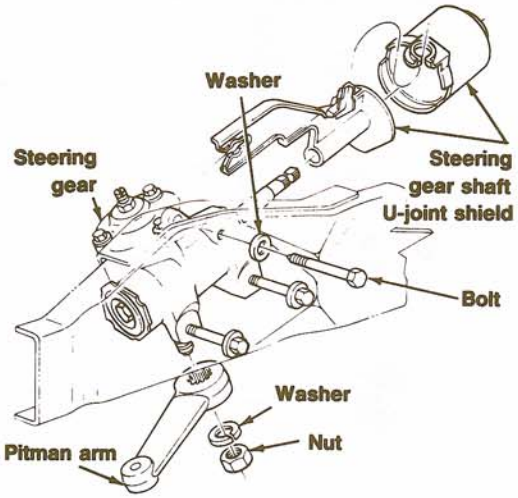

STEERING WHEEL AND COLUMN

Steering Wheel
Removal/Installation

1. Disconnect the negative battery cable on gasoline models. Disconnect both negative battery cables on diesel models.
2. Remove the screws holding the steering wheel horn pad to the spokes. Lift the horn pad straight up, disconnect the horn and/or speed control wires and remove the horn pad.

NOTE

The speed control ground wire terminal is retained by a spring. Be sure to squeeze the terminal in Step 3 to prevent damage to the spring and terminal.

3. 1983-1984 with speed control—Squeeze the J-clip ground wire terminal and pull it from the steering wheel hole.
4. Remove the horn switch assembly.
5. Remove the steering wheel attaching nut.

CAUTION

Do not use the knock-off puller for Step 6 or strike the end of the steering column upper shaft with a hammer. This can damage the steering shaft bearing.

6. Install wheel puller part No. T67L-3600-A or equivalent and remove the steering wheel from the steering column upper shaft.
7. Installation is the reverse of removal. Align the notch on the steering wheel with the mark on the

(37)

POWER STEERING GEARBOX

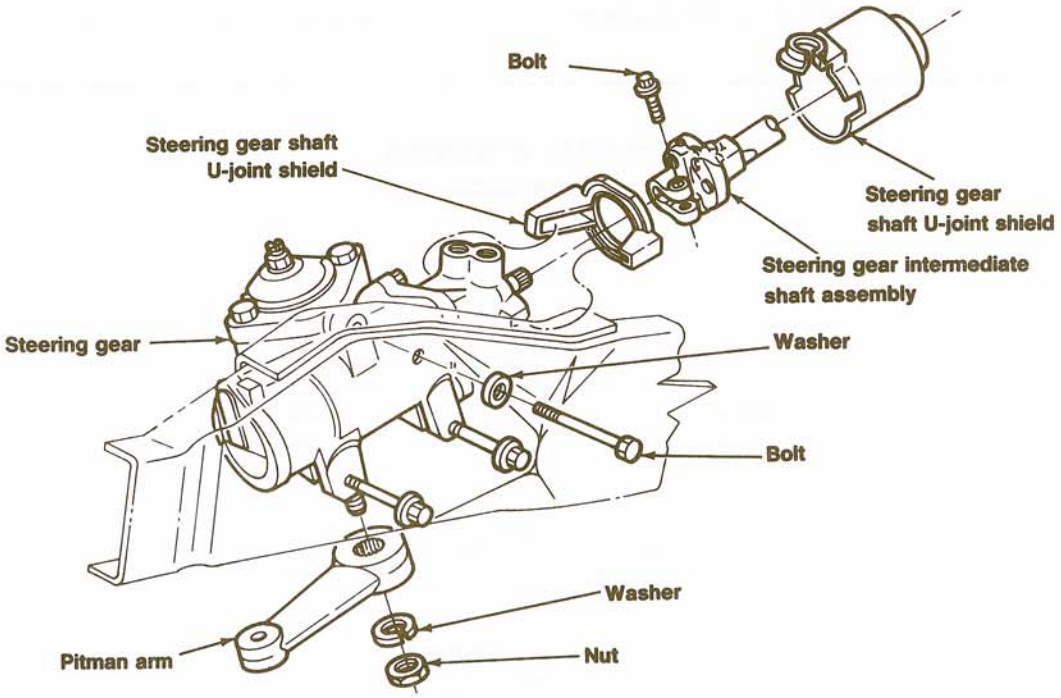

38

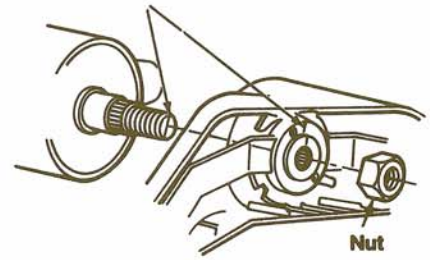

steering column as shown in **Figure 38**. Tighten the wheel nut to 30-42 ft.-lb. (41-56 N•m).

Steering Column Removal/Installation (Standard or Tilt Wheel)

CAUTION

The steering column is very susceptible to damage during and after removal from the vehicle. Hammering, dropping or leaning the column can damage it. Clamping in the corrugated section of the column can deform the tube wall and affect its energy absorption properties.

Refer to **Figure 39** for this procedure.

1. Disconnect the negative battery cable on gasoline models. Disconnect both negative battery cables on diesel models.

39

STEERING WHEEL AND COLUMN

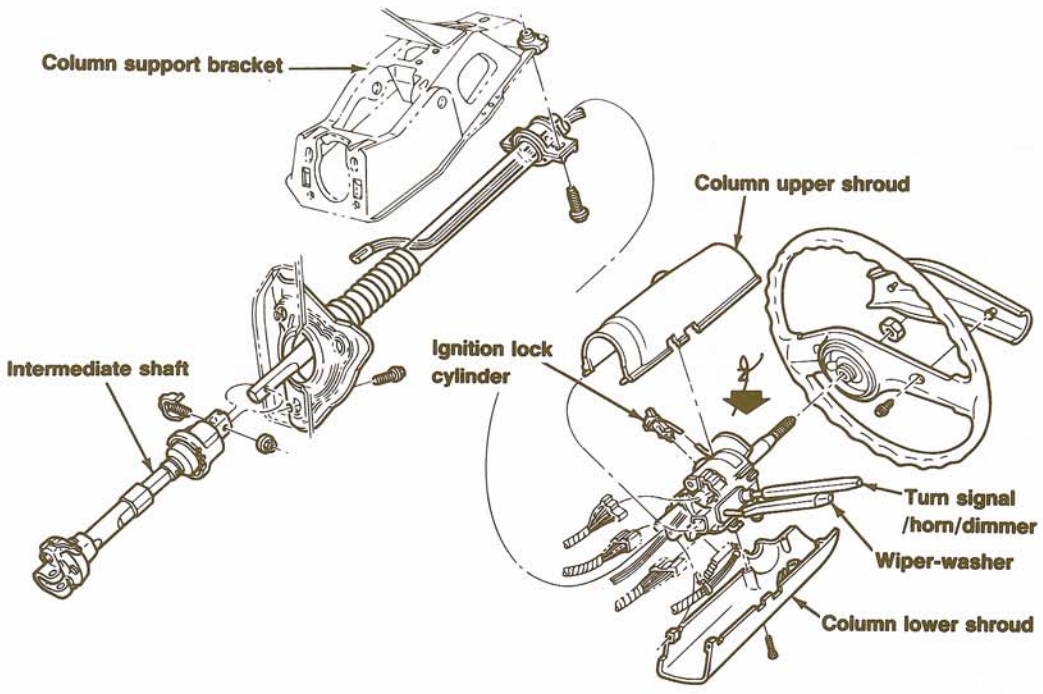

10

2. Remove the steering shaft-to-intermediate shaft bolt. Disengage the column connecting joint.
3. Remove the steering wheel as described in this chapter.
4. Remove the column shroud attaching screws. Remove the shrouds.
5. Tilt column—Squeeze the upper extension shroud at the top and bottom to free it from the retaining plate.
6. Remove the steering column cover directly under the column.
7. Disconnect all electrical quick-connectors at the steering column switches.
8. Loosen but do not remove the 2 bolts holding the column to the support bracket.
9. Remove the 3 screws holding the toeplate and lower seal to the firewall.
10. Remove the 2 column-to-support bracket bolts. Lower the column and remove it from the vehicle.
11. Installation is the reverse of removal.

Table 1 TIGHTENING TORQUES

Fastener	ft.-lb.	N•m
Axle arm		
Bracket-to-frame nut	70-92	95-125
To bracket nut	120-150	163-203
Ball-joint stud nut		
Lower	104-146	141-198
Upper	85-110	115-150
Bumper-to-spring seat bolt	13-18	18-25
Drag link-to-connecting rod ball stud nut	51-75	68-102
Flex coupling	25-35	34-47
Intermediate shaft-to-steering shaft nut	40-50	54-68
Pitman arm		
To drag link nut	51-75	68-102
To steering gear nut	170-230	230-310
Radius arm		
Bracket connecting bolt	35-50	47-68
Bracket-to-frame bolt	77-110	104-152
To frame nut	81-120	109-163
To axle bolt	120-150	163-203
Upper		
1983-1985	48-68	66-92
1986	42-72	57-97
Lower	25-35	34-67
Stabilizer bar (Ranger)		
Mounting bracket bolt	35-50	47-68
To radius arm nut	48-64	65-88

(continued)

Table 1 TIGHTENING TORQUES (continued)

Fastener	ft.-lb.	N•m
Stabilizer bar (Bronco II)		
Mounting bracket screw	27-37	37-50
Link assembly	29-44	40-60
Steering column		
Cover plate bolt	9-12	12-17
To bracket bolt	15-22	20-30
Steering gearbox-to-frame		
Manual	54-66	73-88
Power	50-62	68-84
Steering wheel nut	30-42	40-57
Tie rod		
Adjusting clamp nuts	30-42	40-57
To spindle nut	51-75	68-102
Wheel lug nuts	85-115	115-155

CHAPTER ELEVEN

REAR SUSPENSION, DRIVE SHAFT, AXLE AND DIFFERENTIAL

This chapter provides service procedures for the rear suspension, axle and axle shafts, front/rear drive shaft and front/rear differential. **Table 1** is at the end of the chapter.

REAR SUSPENSION

Semi-elliptic leaf springs are used for the rear suspension on all vehicles. The number of leaves depends upon the vehicle and load capacity. The eye at the front of the spring is bolted to the frame side member bracket; the rear eye is connected to the frame side member by a compression-type shackle. Two U-bolts are used to attach the center of the spring to the axle.

Tubular shock absorbers are stagger-mounted from the rear axle to the frame. The right shock absorber is attached to the front of the axle. The left shock absorber is mounted to the rear of the axle.

A stabilizer bar is bracket-mounted to the rear axle and frame side member links. **Figure 1** shows the major components of the rear suspension.

All rear axles are an integral carrier design. The standard rear axle on 1983-1984 vehicles has a 6 3/4 in. ring gear. The 7 1/2 in. ring gear is optional on 1983-1984 and standard on 1985 and late vehicles. An 8.8 in. ring gear is optional on 1985 and later vehicles.

Shock Absorber Removal/Installation

Refer to **Figure 2** for this procedure.

1. Securely block both front wheels so the truck will not roll in either direction. Raise the rear of the vehicle with a jack and place it on jackstands to support the rear axle.
2. Remove the lower shock absorber mounting nut and bolt (**Figure 3**). Swing the lower end of the shock absorber free of the mounting bracket on the axle housing.
3. Remove the upper shock absorber mounting nut (**Figure 4**). Remove the shock absorber.
4. Installation is the reverse of removal. Tighten both mounting nuts to specifications (**Table 1**).

Shock Absorber Operational Check

Shock absorbers can be routinely checked while installed on the vehicle. Bounce the front of the vehicle up and down several times and releas Repeat this action with the rear of the vehicle. In

1

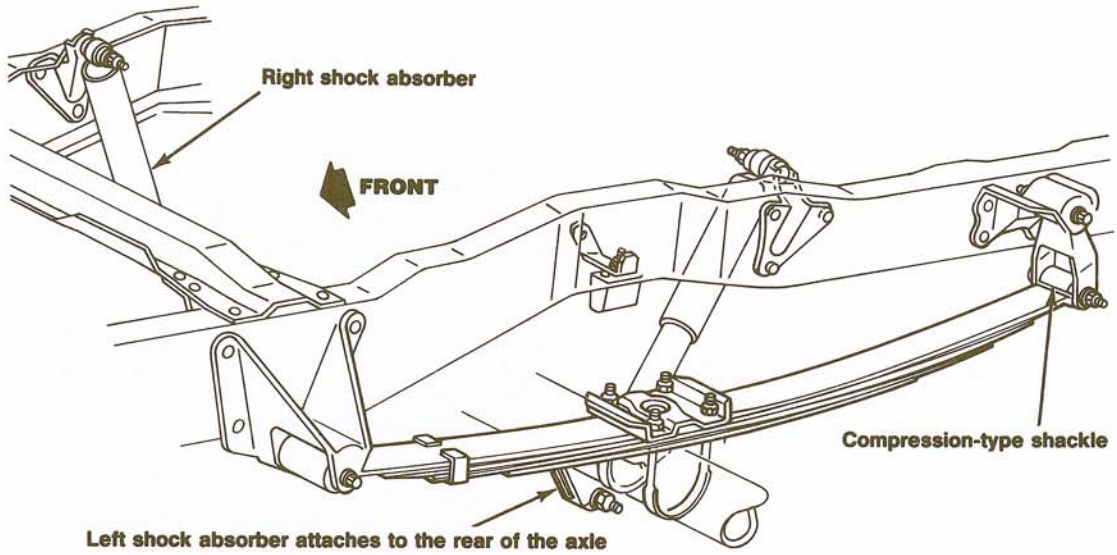
Right shock absorber
FRONT
Compression-type shackle
Left shock absorber attaches to the rear of the axle

2

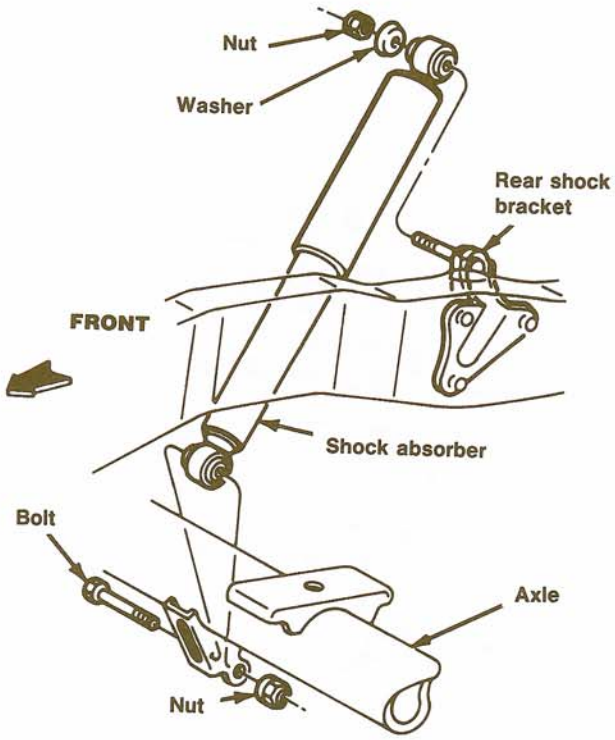
Nut
Washer
Rear shock bracket
FRONT
Shock absorber
Bolt
Axle
Nut

either case, the vehicle should not continue to bounce more than twice. Excessive bouncing is an indication of worn shock absorbers. This test is not conclusive, since the spring stiffness makes it difficult to detect marginal shock absorbers.

If there is any doubt about their serviceability, remove the shock absorbers and perform the following procedure. If a shock absorber is found to be defective, replace all shocks on that end of the vehicle at the same time. If one shock absorber has failed because of physical damage, both should be replaced at the same time, even if the remaining shock appears to be satisfactory.

NOTE

Comparison of a used shock absorber believed to be good with a new shock absorber is not a valid test. The new shock absorber will tend to offer more resistance due to the greater friction of the new rod seal.

1. Inspect the shock absorber piston rod for bending, galling and abrasion. Discard the shock absorber if any of these conditions are noted.
2. Check the outside of the shock absorber for fluid leakage. A light film of fluid on the rod is normal, but severe leakage requires replacement.

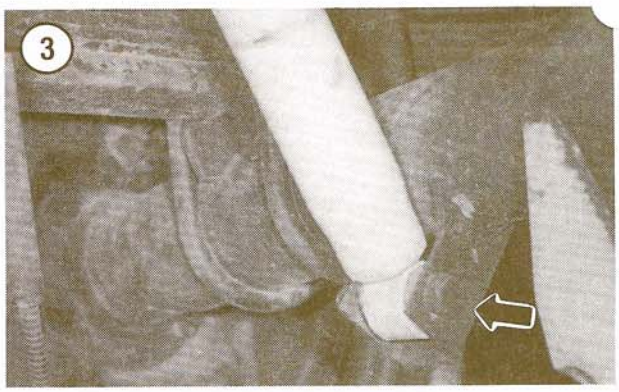

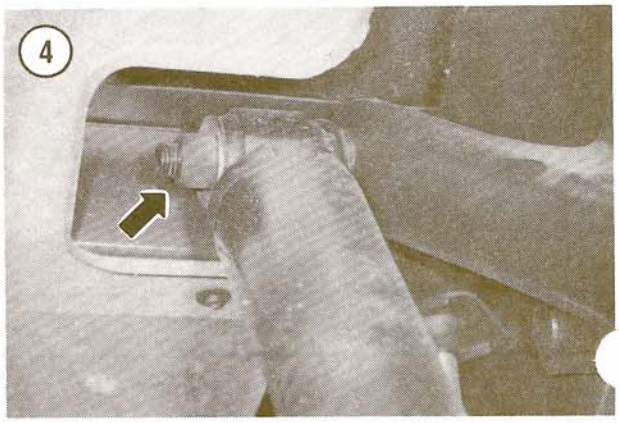

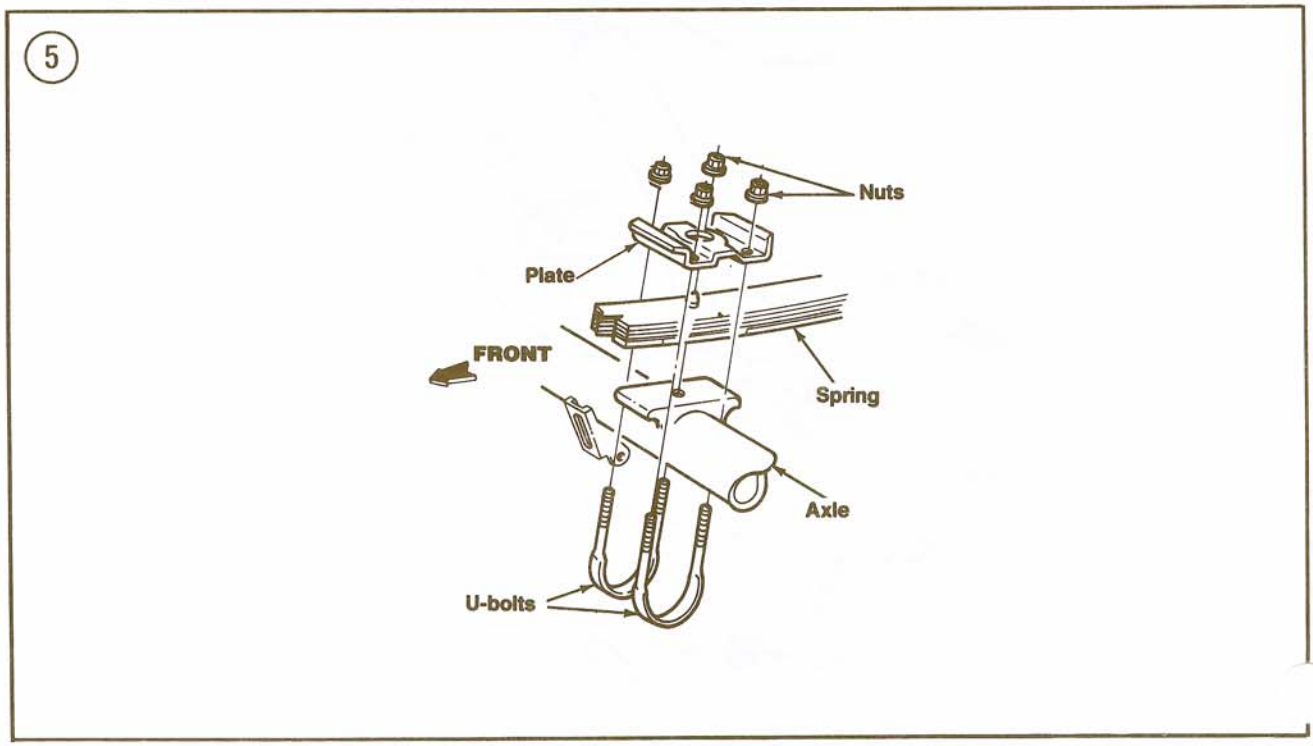

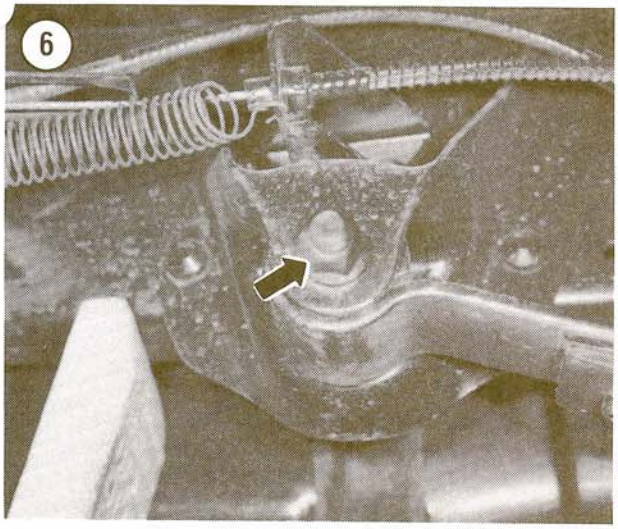

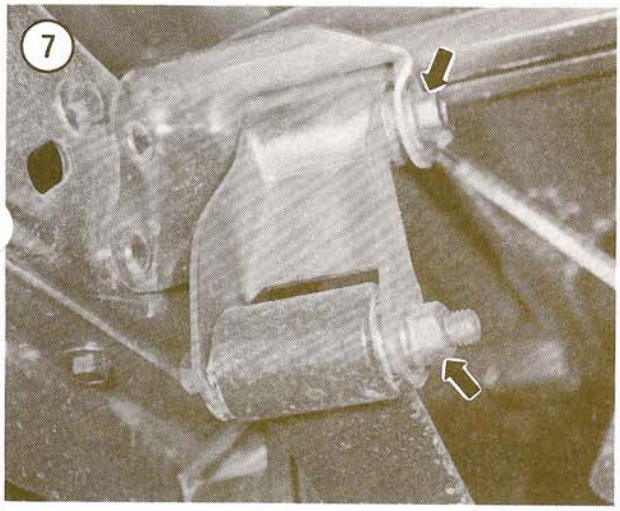

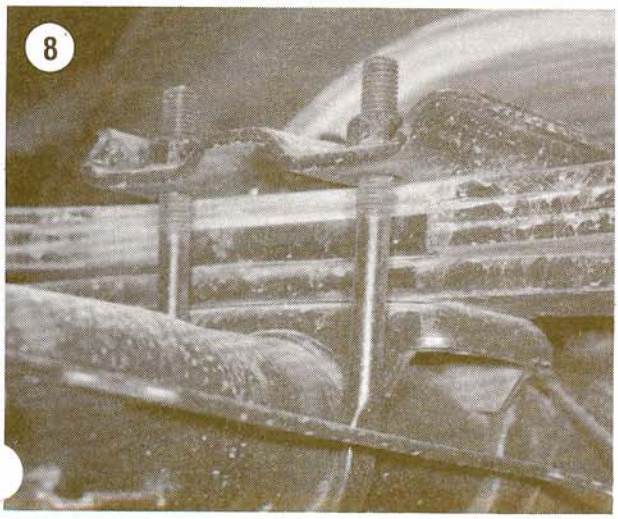

3. Holding the shock absorber in the installed position, completely extend the rod, then invert the shock and completely compress the rod. Repeat this step several times to expel any trapped air.
4. Secure the lower end of the shock absorber in a vise with protective jaws. If protective jaws are not available, wrap the shock in shop cloths.
5. Compress and extend the piston rod as rapidly as possible and check the dampening action. The resistance should be smooth and uniform throughout each stroke, and the resistance felt during extension should be greater than during compression. Repeat this step with the other shock absorber. Both shock absorbers in a pair should feel the same.
6. If the damping action is erratic or resistance to rapid extension/compression is very low (or the same in both directions), replace the shock absorbers as a set.

Leaf Spring
Removal/Installation

1. Raise the vehicle with a jack. Install jackstands under the frame to remove the weight from the rear spring. The tires should still touch the ground.
2. Remove the 4 nuts from the spring U-bolts. Drive the U-bolts from the U-bolt plate. See **Figure 5**.
3. Remove the spring-to-bracket nut and bolt at the front spring eye (**Figure 6**).
4. Remove the upper and lower shackle nuts and bolts at the rear of the spring (arrows, **Figure 7**).
5. Remove the spring and shackle assembly from the rear shackle bracket.
6. Remve the spring.
7. Installation is the reverse of removal. Install the U-bolt plate with the upturned flanges facing as shown in **Figure 8**. Tighten all fasteners to specifications (**Table 1**).

Rear Stabilizer Bar
Removal/Installation

Refer to **Figure 9** for this procedure.
1. Remove the nut, bolt and washer at each end of the stabilizer bar. Separate the ends of the bar from the rear links.
2. Remove the U-bolt and nut from the mounting bracket on each side of the rear axle housing.
3. Remove the mounting bracket, retainer and stabilizer bar.

4. Installation is the reverse of removal. The ends of the bracket and retainer marked "UP" should be positioned together facing the vehicle bed. Tighten all fasteners to specifications (**Table 1**).

REAR AXLE AND AXLE SHAFTS

This section includes removal, installation and inspection procedures for the integral carrier rear axles and axle shafts. Rear axle repair requires special skills and many expensive special tools. The inspection procedures will tell you if repairs are necessary.

Rear Axle Identification

Three Ford integral carrier rear axles are used on the vehicles covered in this manual. Exact usage depends upon model year, engine application and GVW rating.

To determine the axle type used in a given vehicle, check the Safety Compliance Certification Label attached to the door latch edge on the driver's side of the vehicle. For parts replacement, refer to the metal tag attached under a carrier-to-housing bolt. This tag is stamped with the gear ratio, ring gear diameter, production date and plant code. See A, **Figure 10**. Internal changes that affect parts replacement are indicated by a dash and number at the end of the plant code. See B, **Figure 10**.

Carrier Cover Removal/Installation

1. Securely block both front wheels so the truck will not roll in either direction. Raise the rear of the vehicle with a jack and place it on jackstands.
2. Place a clean container underneath the carrier housing.

9

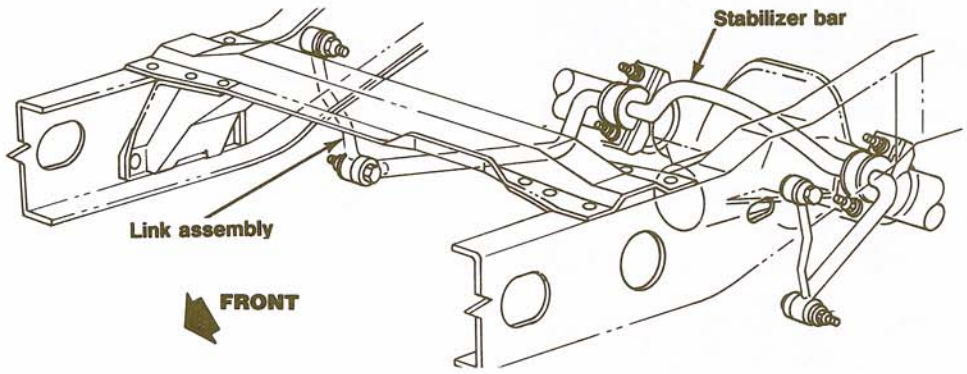

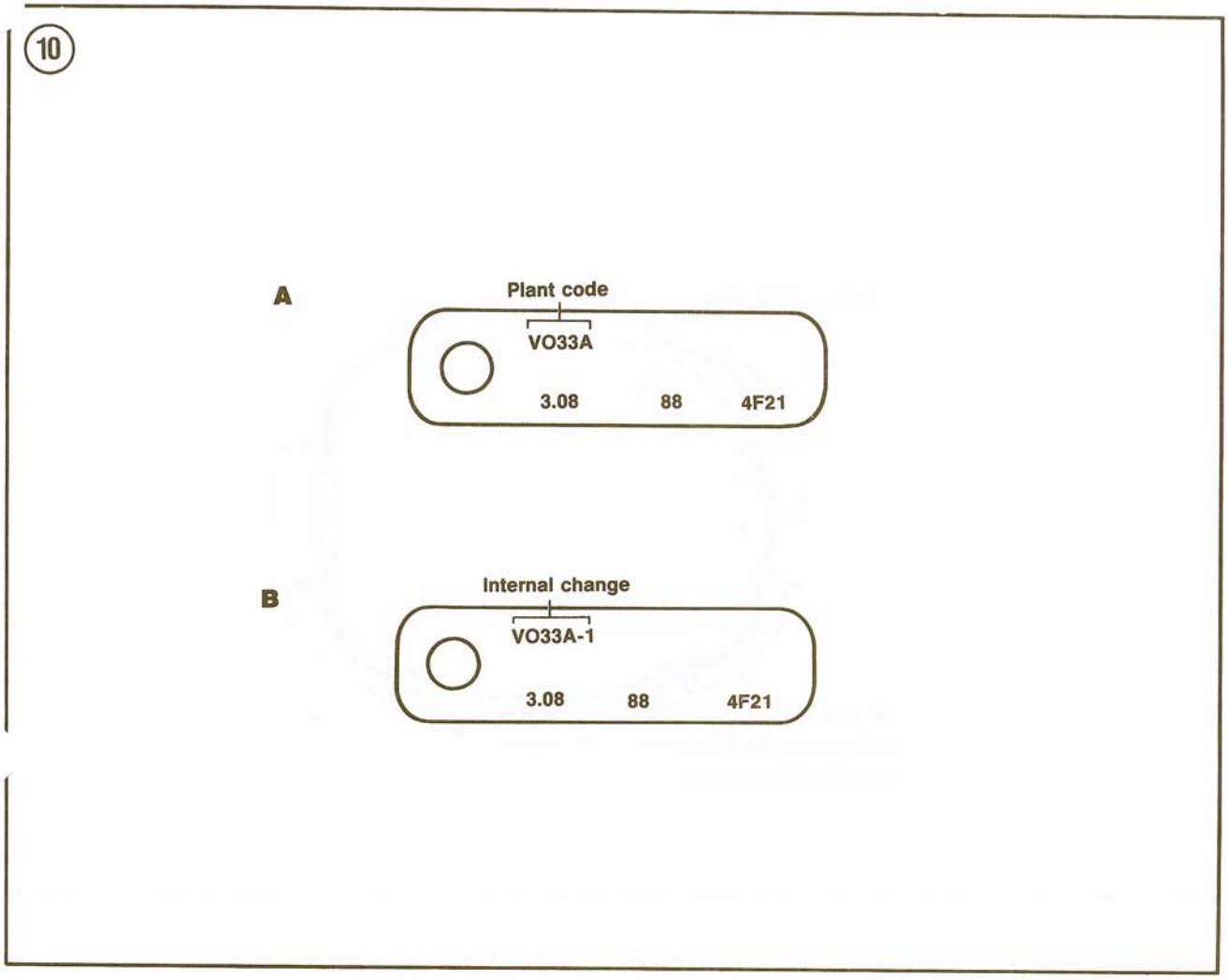

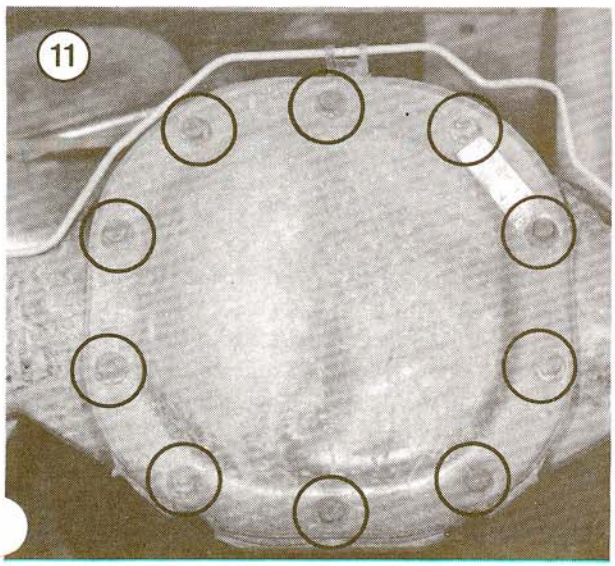

NOTE

The 6 3/4 in. ring gear axle uses 8 cover bolts; the 7 1/2 in. and 8.8 in. ring rear axles use 10 cover bolts. One bolt is used to attach the identification tag. This bolt and tag should always be reinstalled in the same hole from which it was removed.

3. Clean all dirt from the axle housing and carrier cover sealing surfaces with a wire brush and cloth. Remove the cover bolts. See **Figure 11** (typical).
4. Carefully pry the cover loose with a screwdriver and let the lubricant drain.
5. Remove the cover. Clean all RTV sealant residue from the cover mating surface.
6. Stuff clean shop cloths or paper towels into the carrier to protect the inside of the axle, then clean all RTV sealant residue from the carrier mating surface.

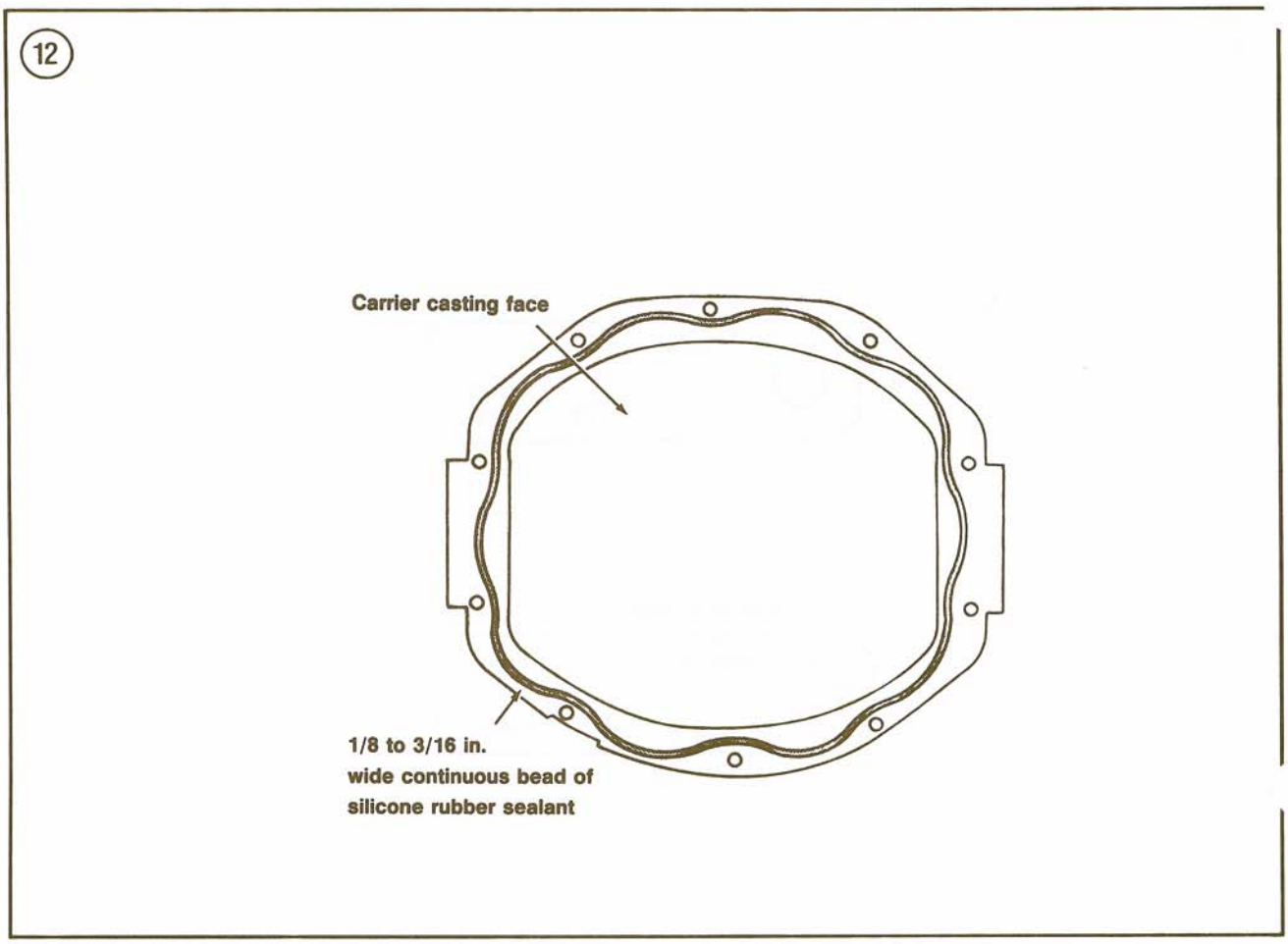

7. Run a 1/8-3/16 in. continuous bead of RTV sealant on the carrier casting face. **Figure 12** shows the 7 1/2 in. axle; the others are similar.

NOTE

The cover must be installed within 15 minutes after the sealant is applied to the carrier casting face or the sealant must be removed and a fresh coat applied.

8. Install the cover and tighten all cover bolts except the ratio tag bolt to 25-35 ft.-lb. (34-47 N•m). Tighten the ratio tag bolt to 15-25 ft.-lb. (20-34 N•m).
9. Remove the fill plug from the front of the axle housing. Fill the carrier with the recommended type and quantity of lubricant specified in Chapter Three until the lubricant level reaches the bottom of the fill plug hole. Install the fill plug and tighten to specifications (**Table 1**).

Axle Shaft Removal/Installation (6 3/4 Inch Axle)

Refer to **Figure 13** for this procedure.
1. Securely block both front wheels so the truck will not roll in either direction.
2. Remove the wheel cover (if so equipped) and loosen the rear wheel lug nuts.
3. Raise the rear of the vehicle with a jack and place it on jackstands positioned under the rear frame crossmember.
4. Remove the wheel and tire assembly from the brake drum.
5. Remove the speed nuts holding the brake drum to the axle housing flange. Remove the brake drum.
6. Install axle shaft adapter part No. T66L-4234-A and a slide hammer on the axle shaft flange. See **Figure 14**.
7. Working through the hole provided in the axle shaft flange, remove the nuts holding the whe bearing retainer plate.

13

AXLE SHAFT (6 3/4 IN. AXLE)

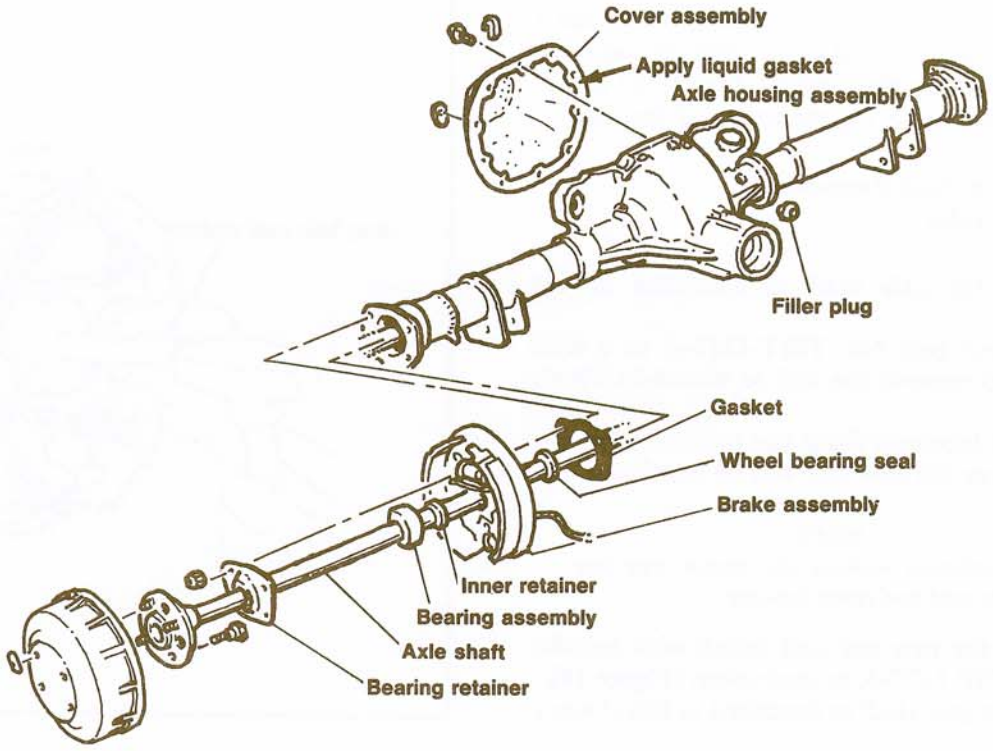

11

14

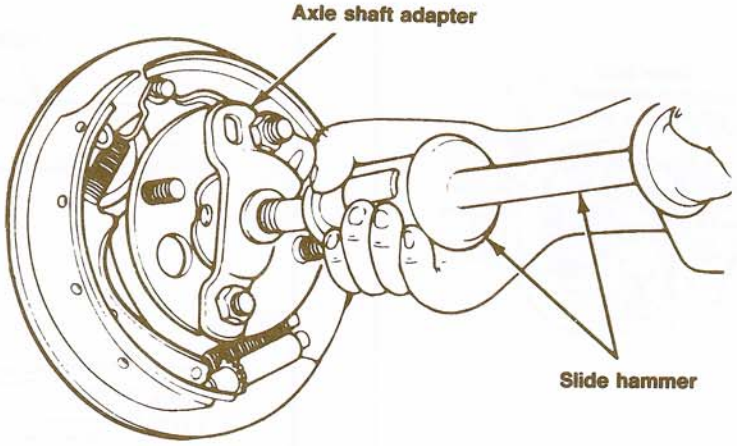

8. Pull the axle shaft assembly from the axle housing.
9. Remove the brake backing plate and wire it to the frame rail.
10. Installation is the reverse of removal. Install a new axle seal as described in this chapter and use a new brake backing plate gasket. Install the gasket with its sealing lip facing the center of the axle.

Axle Shaft Oil Seal Replacement (6 3/4 Inch Axle)

1. Remove the axle shaft as described in this chapter.
2. Attach tool part No. T81T-1225-A to a slide hammer and remove the seal as shown in **Figure 15**.
3. Clean all lubricant from the inside of the axle housing where the new seal will be installed.

NOTE
Seal installation without the proper tool can distort the seal and cause leakage.

4. Position the new seal and install with installer part No. T79P-1177-A or equivalent (**Figure 16**).
5. Install the axle shaft as described in this chapter.

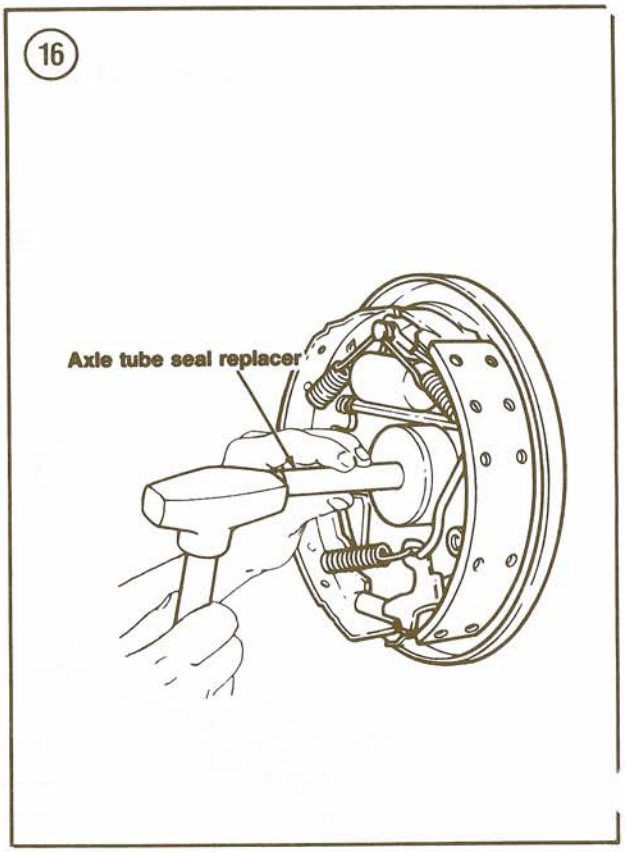

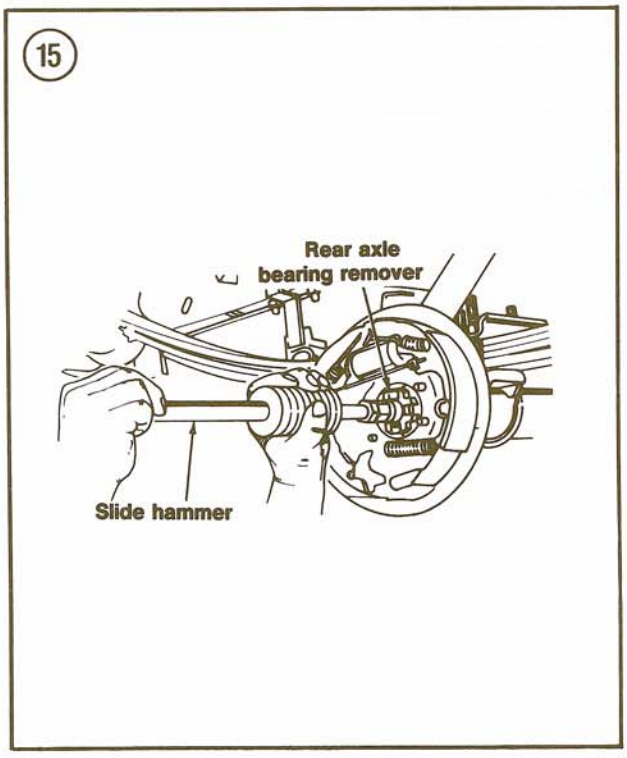

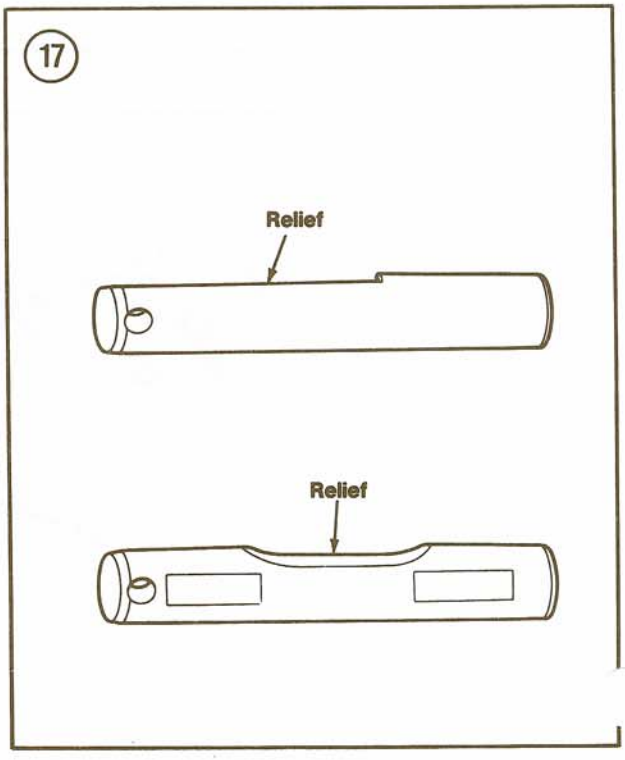

18

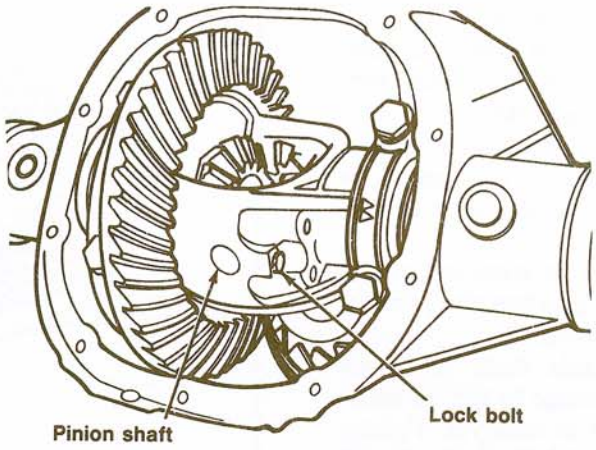

19

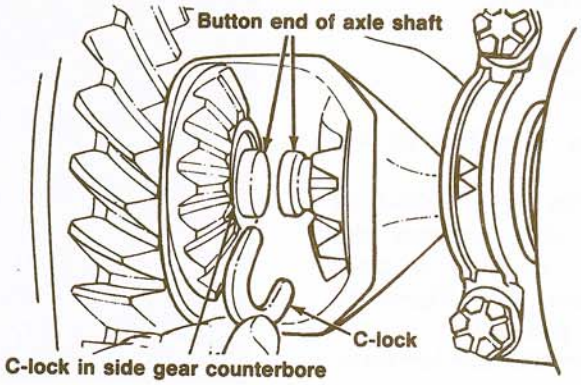

Axle Shaft Removal/Installation (7 1/2 Inch and 8.8 Inch Axle)

NOTE

*The 7 1/2 in. axles with a 3.73:1 or 4.10:1 ratio have a thicker ring gear than other ratio axles. For this reason, the differential pinion cross shaft has a relief on one side for axle C-clip removal. See **Figure 17**.*

1. Securely block both front wheels so the truck will not roll in either direction.

Remove the wheel cover (if so equipped) and loosen the rear wheel lug nuts.

3. Raise the rear of the vehicle with a jack and place it on jackstands positioned under the rear frame crossmember.
4. Remove the wheel and tire assembly from the brake drum.
5. Remove the speed nuts holding the brake drum to the axle housing flange. Remove the brake drum.
6. Remove the carrier cover as described in this chapter.
7. All except 3.73:1 and 4.10:1 ratio axles:
   a. Remove the differential pinion shaft lockbolt and shaft (**Figure 18**).
   b. Apply pressure to the outer end of the axle shaft, pushing it inward toward the center of the vehicle, and remove the C-lock from the button end of the shaft (**Figure 19**).

8. 3.73:1 or 4.10:1 ratio axles:
   a. Remove the pinion shaft lockbolt.
   b. Reach behind the differential case and push the pinion shaft out until the relief step touches the ring gear (**Figure 20**).
   c. Remove the C-lock from the button end of the shaft. On 8.8 in. axles, avoid loss of or damage to the O-ring in the axle shaft groove under the C-lock.
   d. If both axle shafts are to be removed, rotate the pinion shaft 180° to position the relief in the shaft for C-lock removal.
9. Carefully withdraw the axle shaft from the carrier housing to prevent damage to the oil seal.
10. Installation is the reverse of removal. Tighten the pinion shaft lockbolt to 15-22 ft.-lb. (21-29 N•m). Fill the axle with the recommended type and quantity of lubricant specified in Chapter Three until the lubricant level reaches within 3/8-5/8 of the bottom of the fill plug hole. Install the fill plug and tighten to specifications (**Table 1**).

Axle Shaft Oil Seal Replacement (7 1/2 Inch and 8.8 Inch Axle)

1. Remove the axle shaft as described in this chapter.
2. Attach seal remover part No. T81T-1225-A or part No. T85T-1225-A to a slide hammer and insert it into the axle shaft bore until its tangs engage the bearing outer race. See **Figure 15** (typical). Remove the bearing and seal.
3. Lubricate a new bearing with rear axle lubricant.
4. Install the bearing with bearing replacer part No. T78P-1225-A or equivalent as shown in **Figure 16**.
5. Lubricate the lips of a new seal with gear oil.

CAUTION

Seal installation without the proper tool can distort the seal and cause leakage.

6. Fit the seal in the housing bore and install with bearing replacer part No. T78P-1225-A or equivalent. See **Figure 16** (typical).

Axle Housing Removal/Installation

1. Securely blockboth front wheels so the truck will not roll in either direction.
2. Raise the rear of the vehicle with a jack and place it on jackstands positioned under the rear frame crossmember.

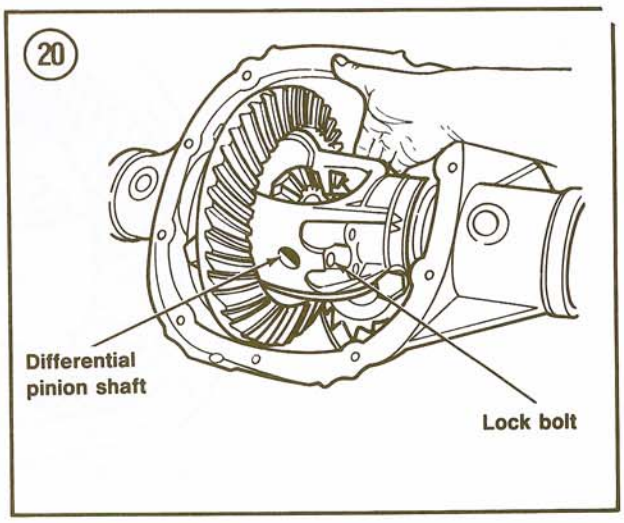

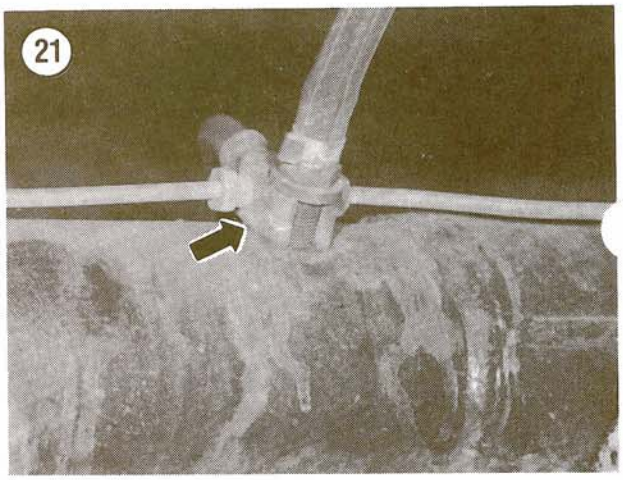

3. Remove the carrier cover as described in this chapter.
4. Paint or scribe alignment marks on the drive shaft companion flange and the pinion flange for reinstallation reference.
5. Disconnect the drive shaft at the pinion flange.
6. Remove the axle shafts as described in this chapter.
7. Disconnect the vent hose front vent tube. Remove the vent from the axle housing (**Figure 21**).

NOTE

It is not necessary to open any hydraulic brake fittings in Step 7.

8. Remove both brake backing plates and wi them to the frame rails. Remove the brake T-fitting

or junction block from the axle housing (**Figure 21**). Remove the brake line from the axle housing clips.

9. Support the rear axle housing with a jack.
10. Disconnect the lower shock absorber and rear spring fasteners as described in this chapter.
11. Lower the axle housing with the jack and remove it from under the vehicle.
12. Installation is the reverse of removal. Fill the axle with the recommended type and quantity of lubricant specified in Chapter Three until the lubricant level reaches within 3/8-5/8 in. of the bottom of the fill plug hole. Install the fill plug and tighten to specifications (**Table 1**).

DRIVE SHAFTS

A drive shaft assembly is used to transmit torque from the transmission (2-wheel drive) or transfer case (4-wheel drive) to the rear axle. Drive shafts differ in length, slip yoke and method of attachment according to model and engine/transmission application.

The rear drive shaft on all 2-wheel drive and long wheelbase 4-wheel drive models (except Ranger Supercab models and Bronco II with automatic transmission) is a one-piece assembly. This consists of a tube assembly with a single cardan universal joint and splined slip yoke at the transmission end. A second universal joint and circular type companion flange connect the drive shaft with the differential pinion flange (heavy-duty chassis cab models with 8.8 in. ring gear are connected to the differential by a half-round pinion flange and U-bolts). See **Figure 22**.

Ranger Supercab models use a 2-piece drive shaft with a center bearing assembly and rubber coupling (manual transmission only).

All 4-wheel drive vehicles use 2 drive shaft assemblies. One connects the transfer case to the rear axle; the other connects the transfer case to the front drive axle. The front drive shaft is a one-piece assembly as shown in **Figure 22**. The rear drive shaft on short wheelbase Rangers and all Bronco II models with manual transmission consists of a tube assembly with a double cardan universal joint and center yoke at the transfer case end and a single

(22)

DRIVE SHAFT (2-WHEEL DRIVE)

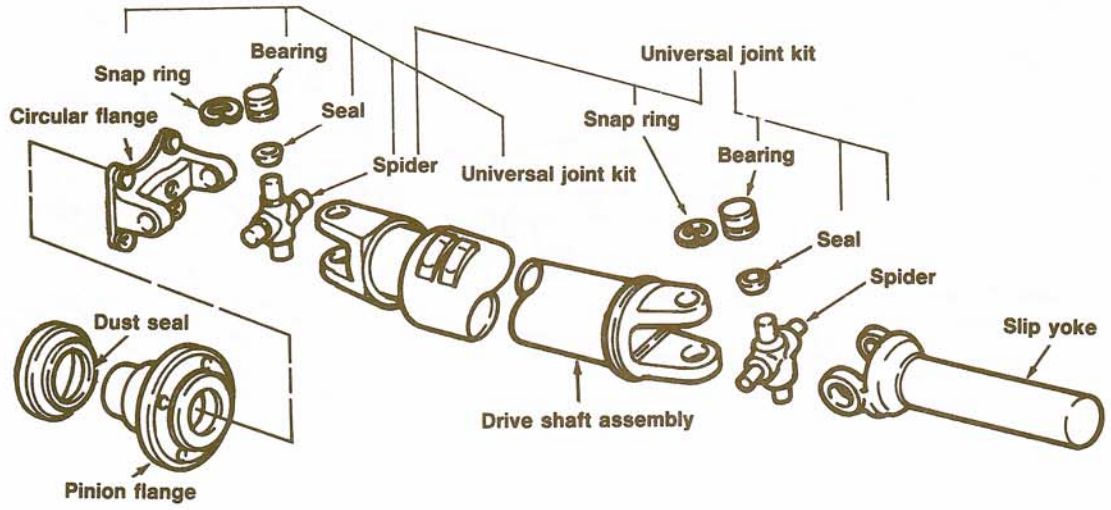

11

23

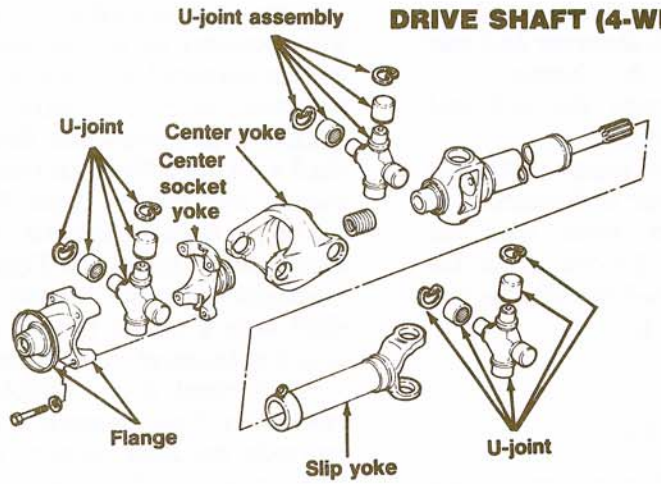
U-joint assembly
DRIVE SHAFT (4-WHEEL DRIVE)
U-joint
Center yoke
Center socket yoke
Flange
Slip yoke
U-joint

24

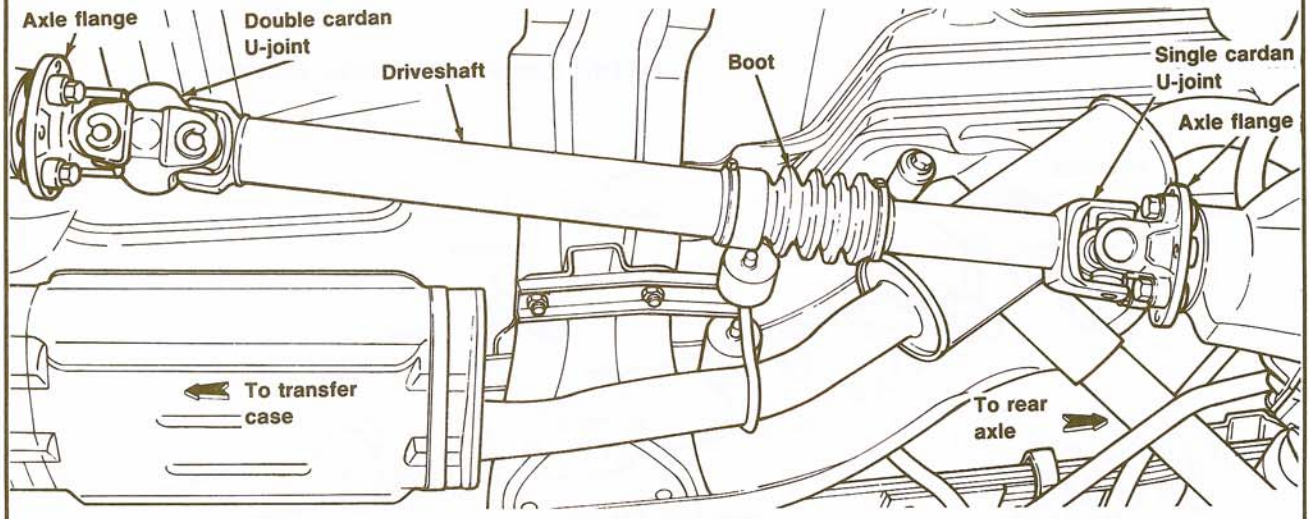
Axle flange
Double cardan U-joint
Driveshaft
Boot
Single cardan U-joint
Axle flange
To transfer case
To rear axle

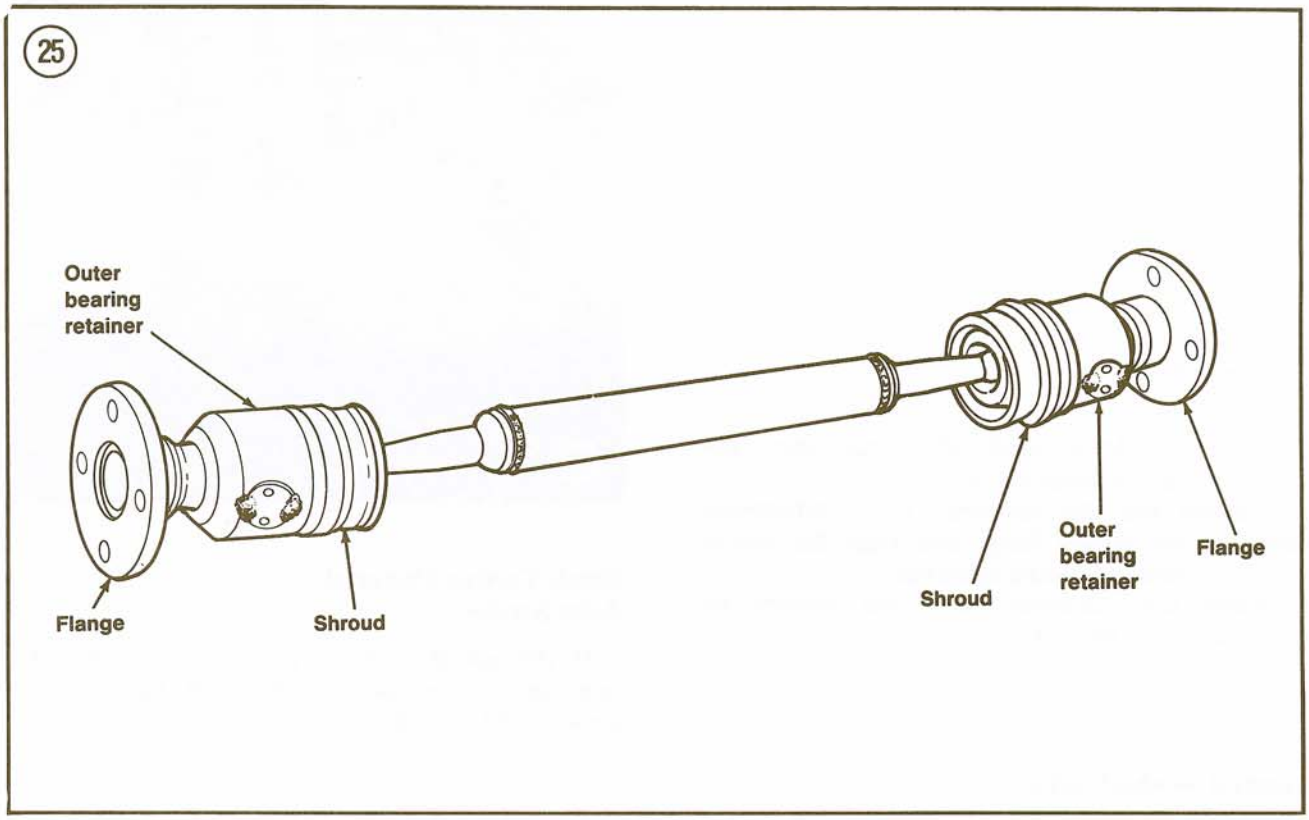



cardan universal joint at the axle end. See **Figure 23** and **Figure 24**.

All Bronco II models with automatic transmission use a rear drive shaft with 2 constant velocity (CV) joints (**Figure 25**). The bearing retainer on each end has a dust boot covered by a plastic shroud.

Drive shafts are balanced assemblies and must not be painted or undercoated. Correct alignment is required when a drive shaft is removed and reinstalled to prevent drive line vibration. Correct phasing is also required. This means that the U-joints must be installed on the shafts in the same plane.

The universal joints are factory-lubricated and cannot be lubricated while on the vehicle. The slip yoke and center support yoke on 4-wheel drive models each have one grease fitting and should be lubricated when required. See Chapter Three. Universal joint bearings are factory-installed with snap rings. A repair kit containing a new spider with bearing assemblies and snap rings is available to overhaul worn universal joints.

11

Removal (2-wheel Drive)

1. Securely block both front wheels so the truck will not roll in either direction.
2. Raise the vehicle with a jack and place it on jackstands.
3. Scribe or paint alignment marks on the shaft and pinion flanges for reinstallation reference.
4. Disconnect the rear universal joint companion flange from the pinion flange (**Figure 26**).

5. Lower the drive shaft slightly and pull it to the rear of the vehicle until the slip yoke (**Figure 27**) clears the transmission extension housing seal.
6. Remove the drive shaft from under the vehicle. Plug the transmission extension housing with a clean shop cloth to prevent fluid leakage.

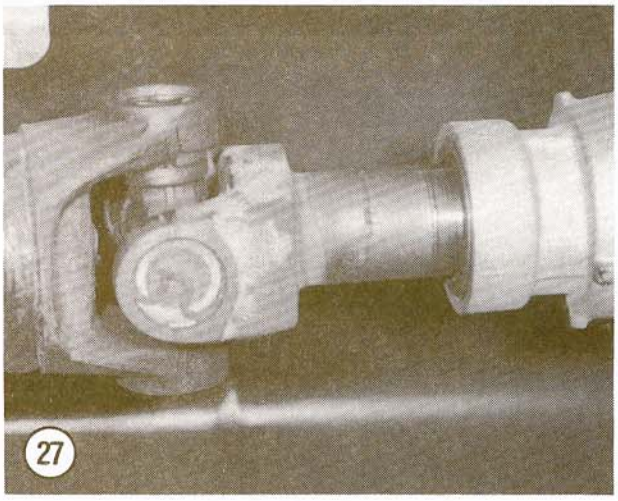

Installation (2-wheel Drive)

1. Slide the drive shaft slip yoke into the transmission extension housing.
2. Position the rear universal joint companion flange on the pinion flange and align the marks scribed or painted during removal.
3. Install the attaching bolts and tighten to specifications (**Table 1**).

Removal (4-wheel Drive)

1. Securely block both front wheels so the truck will not roll in either direction. Raise the vehicle with a jack and place it on jackstands.
2. Scribe or paint alignment marks on the shaft and transfer case flanges for reinstallation reference.
3. To remove either drive shaft, disconnect the universal joint flange from the transfer case flange. Disconnect the universal joint from the axle flange.
4. Remove the drive shaft from under the vehicle. Plug the transfer case opening(s) with a clean shop cloth to prevent fluid leakage.

Installation (4-wheel Drive)

1. Position the double universal joint end of the drive shaft to the transfer case. Make sure the marks scribed or painted during removal are aligned. Install the fasteners and tighten to specifications (**Table 1**).
2. Position the single universal joint end of the drive shaft to the axle. Install the fasteners and tighten to specifications (**Table 1**).

Single Cardan Universal Joint Service

If the specified tools are not available, the bearings can be pressed out with suitable size sockets and a C-clamp.

Disassembly

Refer to **Figure 28** (typical) for this procedure.
1. Remove the drive shaft from the vehicle as described in this chapter.
2. Mark the position of all parts to be disassembled relative to the drive shaft for proper reassembly.

CAUTION
Excessive tightening of the vise in Step 3 may damage the drive shaft tube.

3. Wrap the drive shaft in shop cloths and place it in a vise. Tighten the vise sufficiently to hold the drive shaft in place.
4. Remove the bearing cup snap rings with a screwdriver blade.
5. Install receiver part No. T74P-4635-C or equivalent on the slip yoke (or companion flange) as shown in **Figure 29**. Press the bearings out.
6. If the bearing cup cannot be pressed out of the slip yoke (or companion flange), remove it with locking pliers.

(28)

SINGLE CARDAN UNIVERSAL JOINTS

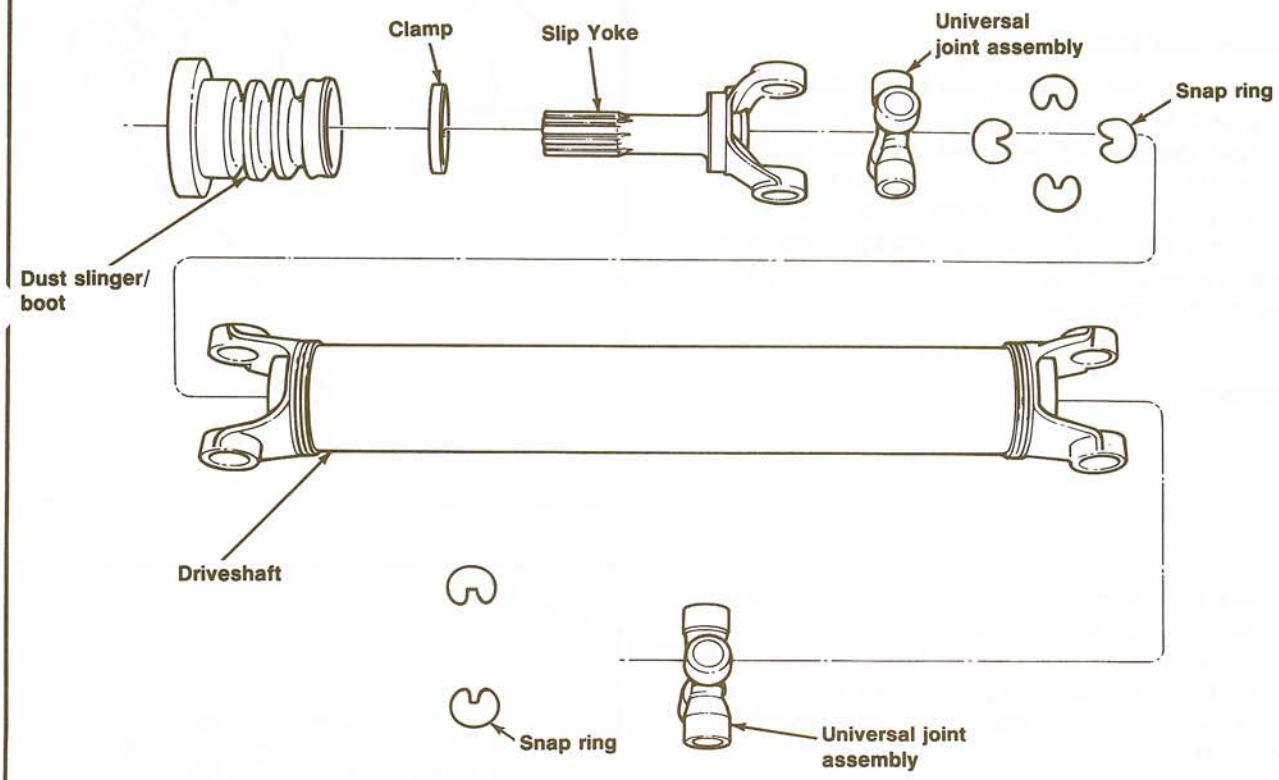

7. Reposition the tool 180°. Press on the spider and remove the remaining bearing cup from the opposite yoke.
8. Remove the slip yoke (or companion flange) from the spider.
9. If universal joint service is also required at the other end of the drive shaft, remove the companion flange (or slip yoke) in the same manner.
10. Long wheelbase 4-wheel drive Ranger model—Remove and discard the drive shaft boot clamps. Scribe or paint match marks on the slip yoke and drive shaft tube for reassembly reference. Pull slip yoke from drive shaft.

Cleaning and Inspection

1. Clean the yoke bearing cap bores with solvent and a wire brush.
2. Wash the bearing caps, bearings and spider in solvent. Wipe dry with a clean shop cloth.
3. Check the caps, bearings and spider for brinneling, flat spots, scoring, cracks or excessive wear. Replace the entire assembly if any part(s) show such conditions.

Assembly

NOTE

It may be necessary to grind the surface of the new snap rings slightly before installing them in Step 3 and Step 6.

Refer to **Figure 28** (typical) for this procedure.
1. Long wheelbase 4-wheel drive Ranger models—Lubricate drive shaft slip splines with Ford Multi-purpose Long-life lubricant. Loosely install boot on drive shaft tube, then install slip yoke with match marks aligned. Install new boot clamps.
2. Install a new bearing cap in the yoke.
3. Position the spider in the yoke and use tool part No. T74P-4635-C and part No. CJ912 (or equivalent) to press the bearing cup 1/4 in. below the yoke surface. See **Figure 30**.
4. Remove the tool and install a new snap ring.
5. Fit a new bearing cup into the opposite side of the yoke.
6. Install tool part No. T74P-4635-C as shown in **Figure 29** and press on the bearing cup until the opposite cup touches the snap ring.
7. Remove the tool and install a new snap ring.

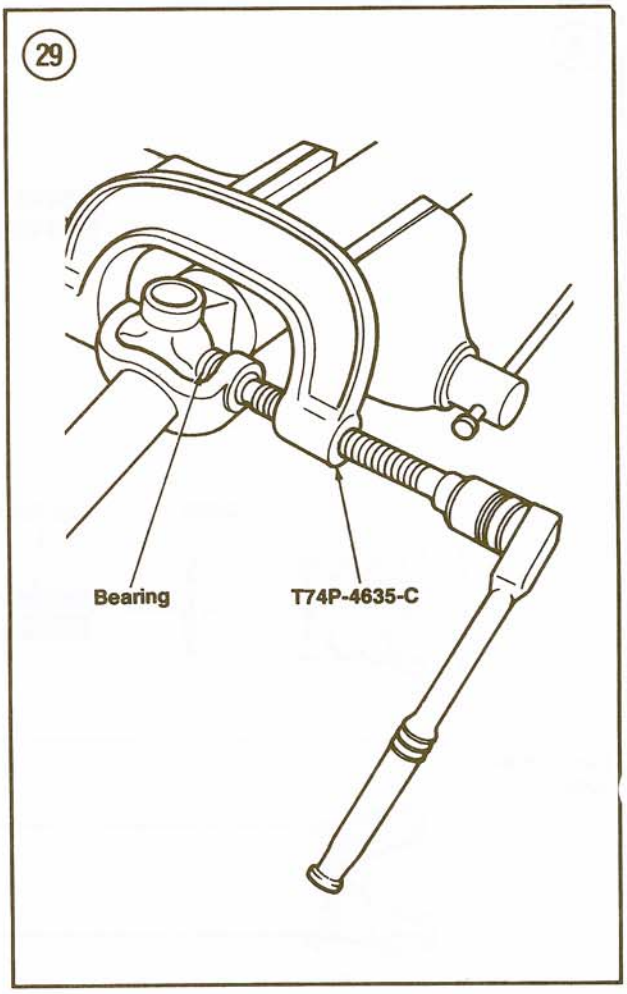

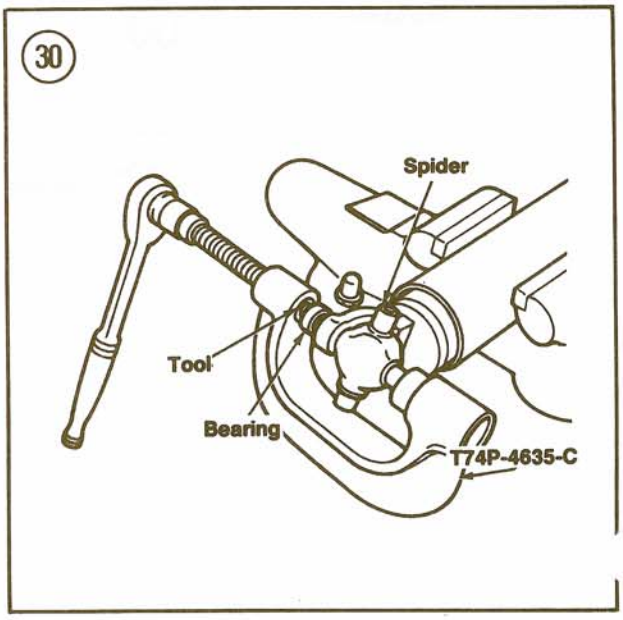

Double Cardan Universal Joint Service

If the specified tools are not available, the bearings can be pressed out with suitable size sockets and a C-clamp.

Disassembly

Refer to **Figure 31** (typical) for this procedure.

1. Remove the drive shaft from the vehicle as described in this chapter.
2. Mark the positions of the spiders, center yoke and centering socket yoke relative to the stud yoke welded to the front of the drive shaft.

CAUTION

Excessive tightening of the vise in Step 3 may damage the drive shaft tube.

3. Wrap the drive shaft in shop cloths and place it in a vise. Tighten the vise sufficiently to hold the drive shaft in place.
4. Remove the bearing cup snap rings in the front of the center yoke with a screwdriver blade.

(31)

DOUBLE CARDAN UNIVERSAL JOINTS

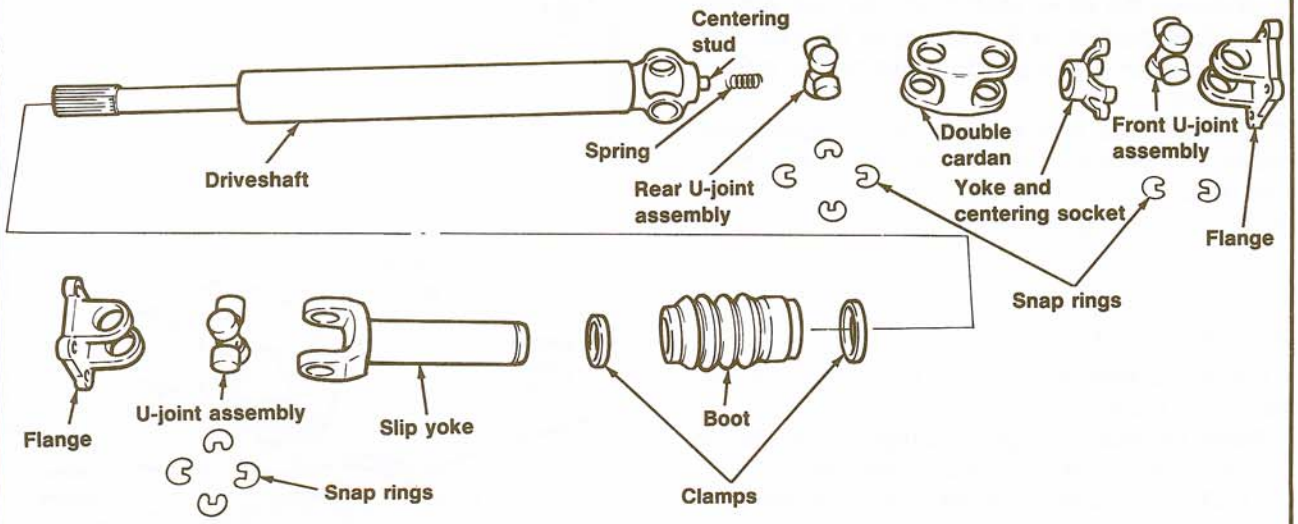

5. Install receiver part No. T74P-4635-C or equivalent on the center yoke. See **Figure 29**. Press the bearing about 3/8 in. out of the yoke and remove the tool.
6. Remove the drive shaft from the vise and reposition it 180°, clamping on the exposed portion of the bearing. Tap the center yoke with a ball peen hammer to free it from the bearing. See **Figure 32**.
7. Remove the 2 bearing cups from the spider. See **Figure 33**.
8. Repeat Step 5 and Step 6 to press the remaining bearing about 3/8 in. out of the yoke.
9. Remove the spider from the center yoke.
10. Pull the centering socket yoke from the center stud. Remove the rubber seal on the centering ball stud. See **Figure 34**.
11. Remove the snap rings from the center yoke and drive shaft yoke with a screwdriver.
12. Install receiver part No. T74P-4635-C or equivalent on the drive shaft yoke (**Figure 35**). Press the bearing outward until the inside of the center yoke almost touches the slinger ring at the front of the drive shaft yoke. Remove the tool.
13. Remove the drive shaft from the vise. Clamp the exposed portion of the bearing in the vise. Tap the center yoke with a plastic mallet to free it from the bearing.
14. Reinstall the tool to press on the spider and remove the opposite bearing. Remove the center yoke from the spider.
15. Remove the spider from the drive shaft yoke.

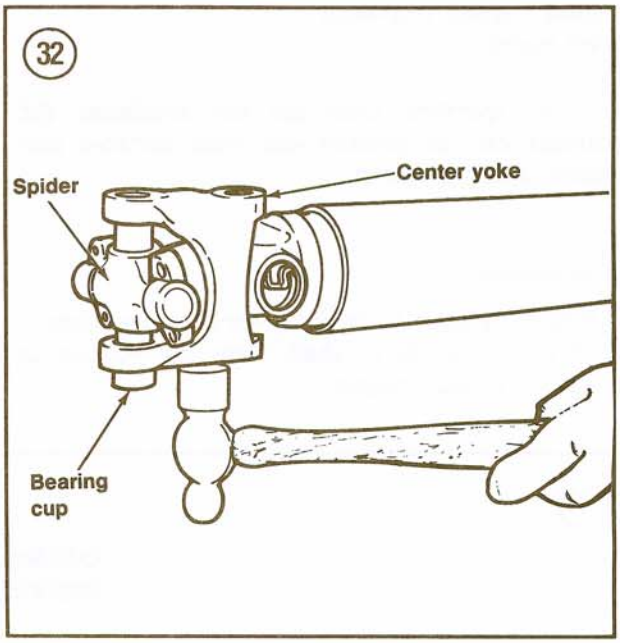

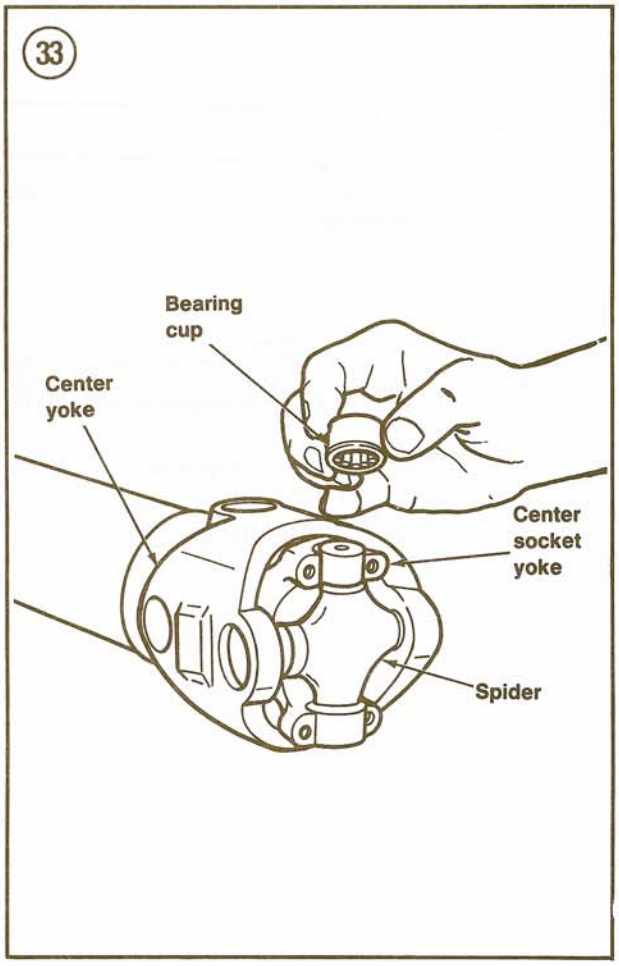

Cleaning and inspection

1. Clean the yoke bearing cap bores with solvent and a wire brush.
2. Wash the bearing caps, bearings and spider in solvent. Wipe dry with a clean shop cloth.
3. Check the caps, bearings and spiders for brinneling, flat spots, scoring, cracks or excessive wear. Replace the entire assembly if any part(s) show such conditions.

Assembly

Refer to **Figure 31** (typical) for this procedure.
1. Position the spider in the drive shaft yoke. Make sure spider bosses or lubrication plugs are in the same position as originally installed.
2. Press the bearing in place using tool part No. T74P-4635-C or equivalent. Install new snap rings.

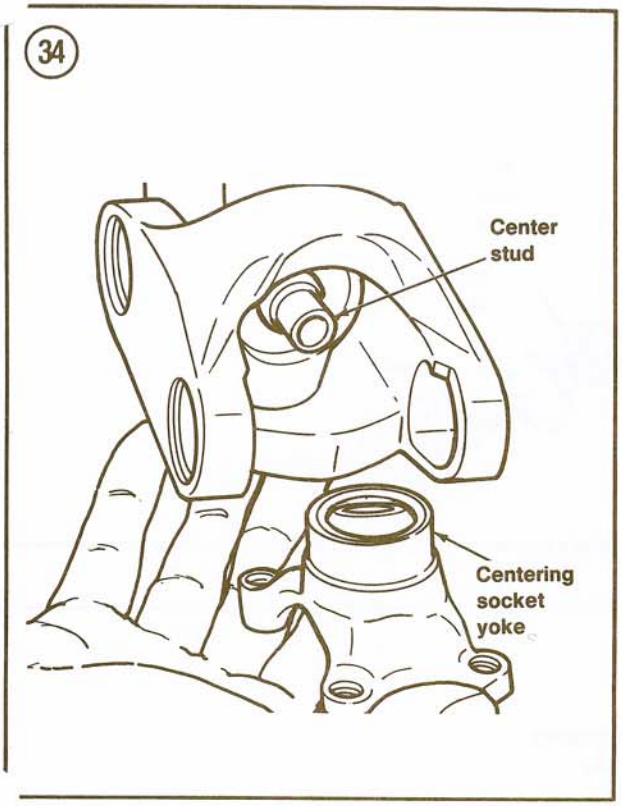

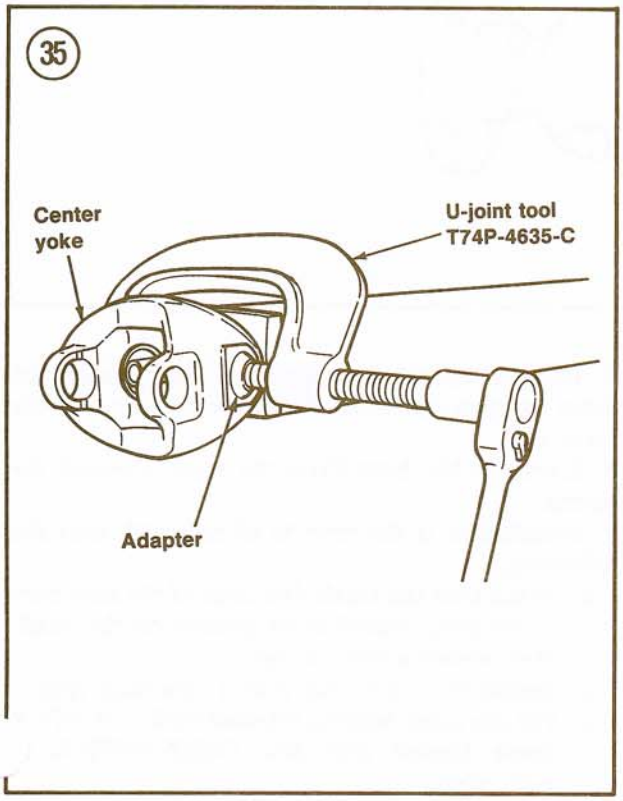

3. Fill the socket relief and ball with Ford Multi-purpose Long-life lubricant. Fit the center yoke over the spider ends. Press the bearing in place and install new snap rings.
4. Position a new seal on the centering ball stud. Fit the centering socket yoke on the stud (**Figure 34**).
5. Position the front spider in the center yoke with the bosses or lubrication plugs in the same position as originally installed.
6. Seat the first pair of bearings into the centering socket yoke. Press the second pair of bearings into the centering socket yoke and install new snap rings.
7. Press the centering socket yoke onto the remaining bearing cup.
8. If new spiders were installed, remove the lubrication plugs and lubricate the universal joints. Reinstall the plug(s) in the spider(s).

Constant Velocity (CV) Joint Service

CV joints are matched assemblies and cannot be serviced. If any component is worn or damaged, the entire joint must be replaced. The CV joints are lubricated for life during assembly with a special CV joint grease and require no periodic lubrication.

The CV joint boots, however, should be inspected periodically for signs of grease leakage, damage or deterioration. If such signs are found, new boots should be installed. Continuing to drive a vehicle with damaged or leaking CV joint boots will result in premature CV joint failure and a costly repair.

CV joint boots should never be cleaned or come in contact with oil, gasoline or cleaning solvents. These will cause a chemical deterioration of the boot material. If it is necessary to clean the boot, use only soap and water. Rinse the boot thoroughly after cleaning and blow completely dry with compressed air before reuse.

Boot removal/installation

Refer to **Figure 36** for this procedure.
1. Remove the drive shaft as described in this chapter.
2. Clamp the drive shaft in a vise with protective jaws. If protective jaws are not available, wrap the drive shaft in shop cloths or place between soft wooden blocks in the vise.

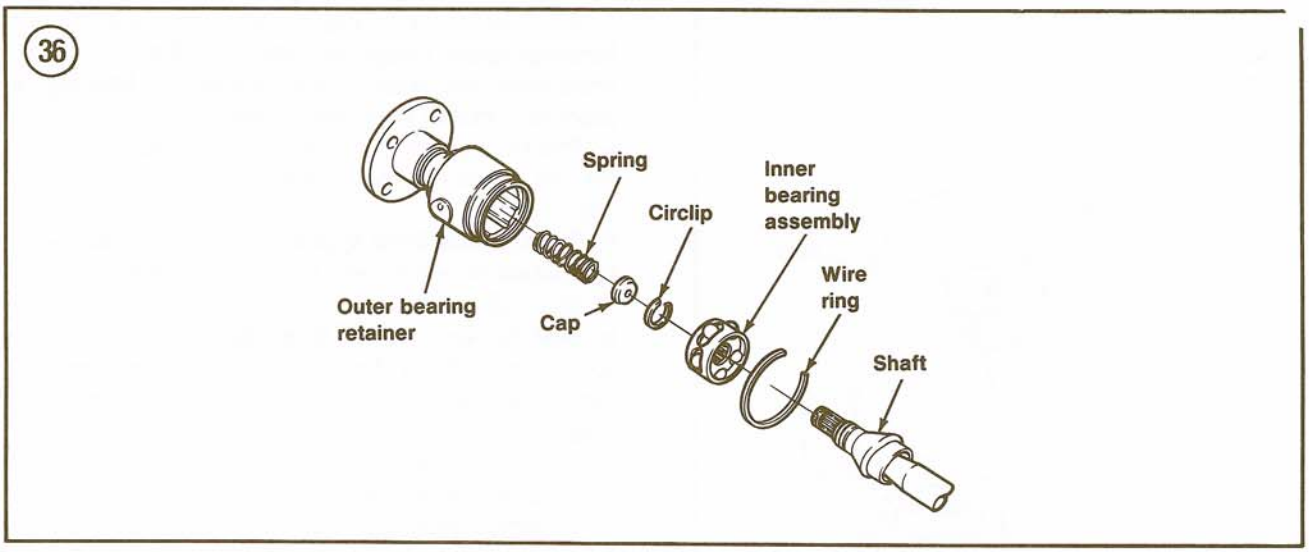

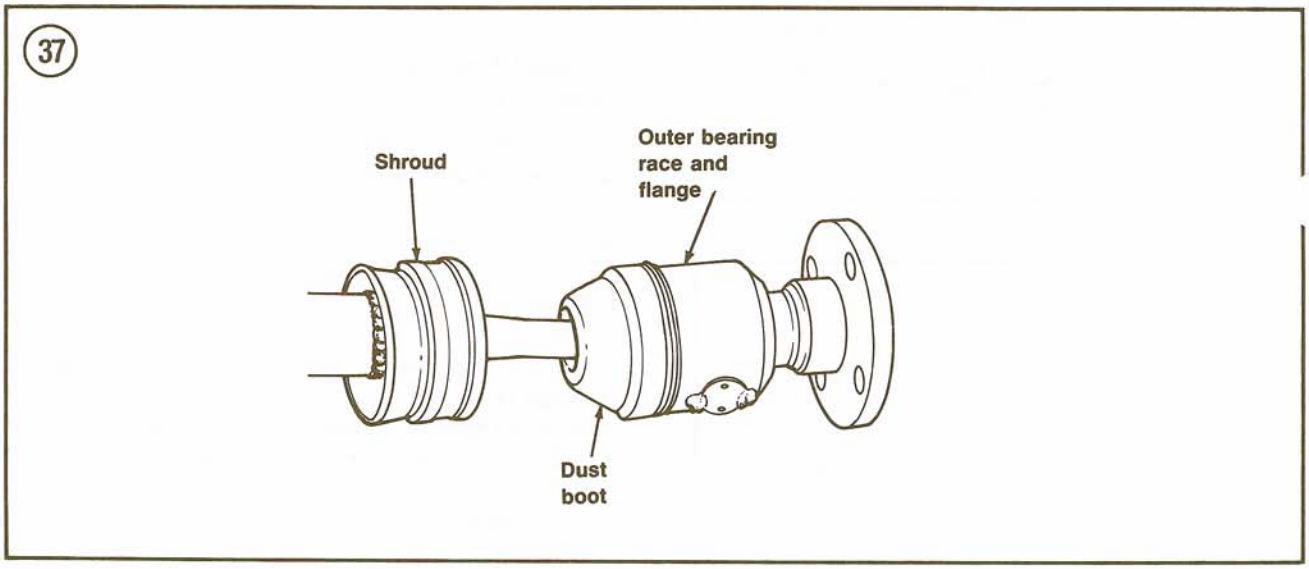

3. Unclamp the shroud and carefully remove it to prevent damage to any of the components it protects (**Figure 37**). If necessary, lightly tap end of shroud with a blunt instrument to assist in removal.

4. Peel the boot back and away from the bearing race/flange assembly (**Figure 38**).

5. A wire ring holds the inner race to the outer race. Use a small screwdriver to pry the wire ring free (**Figure 39**).

6. Carefully separate the inner race and shaft from the outer bearing retainer. Remove the cap and spring from the outer retainer.

7. Expand and remove the snap ring holding the inner race to the shaft (**Figure 40**). Remove the inner race.

8. Unclamp the boot from the shaft. Discard the clamp.

9. Installation is the reverse of removal, plus the following:

   a. Make sure the small diameter of the new boot is properly seated in its groove on the shaft, then install a new clamp.
   b. Install the inner race with a new snap ring.
   c. Fill the outer bearing retainer with 3 oz. of CV Joint Grease part No. D8RZ-19590-A (equivalent.

38

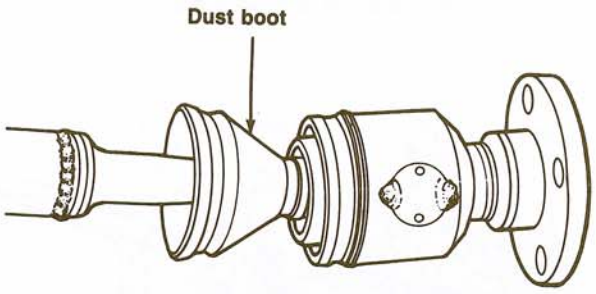

39

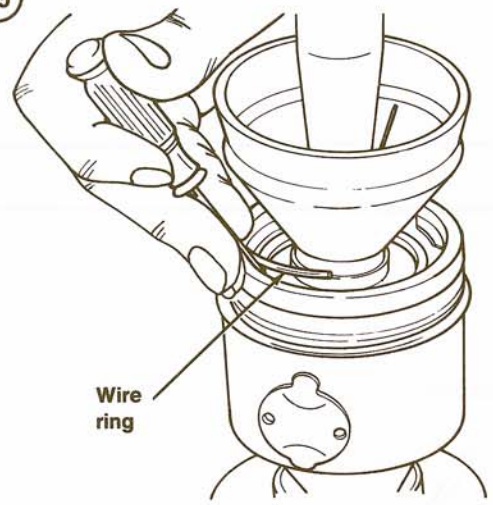

40

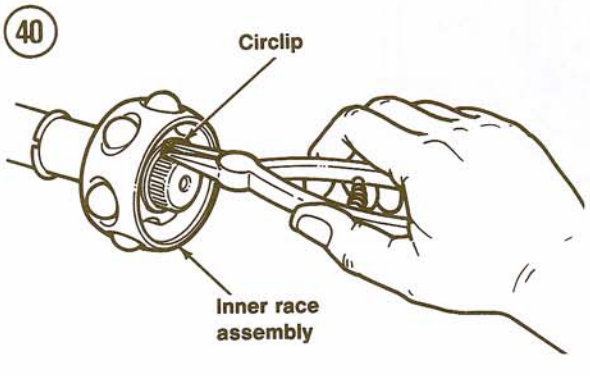

d. After reinstalling the wire ring, fill the remaining space in the outer bearing retainer with CV Joint Grease. Wipe any excess grease from external surfaces.
e. Before installing the shroud and a new clamp, remove any air that might be trapped in the boot by inserting a dull instrument between the boot and outer bearing retainer and gently squeezing the boot.

DIFFERENTIAL

11

The differential case assembly and drive pinion should be inspected while installed in the case. This inspection can assist in determining the cause of the problem and the corrective action required.

NOTE

If the inspection procedures indicate defects, take the axle housing to a Ford dealer or competent garage. Do not disassemble the axle carrier further without the necessary tools and experience.

Differential Inspection (All Ratios)

1. Wipe as much lubricant as possible from the ring and pinion gears.
2. Visually check the components for signs of wear or damage.
3. Rotate the ring gear manually. Check ring gear teeth for abnormal wear, scoring, cracking or chipping. Any roughness noted during rotation indicates defective gears or bearings.

(41)

RING GEAR BACKLASH

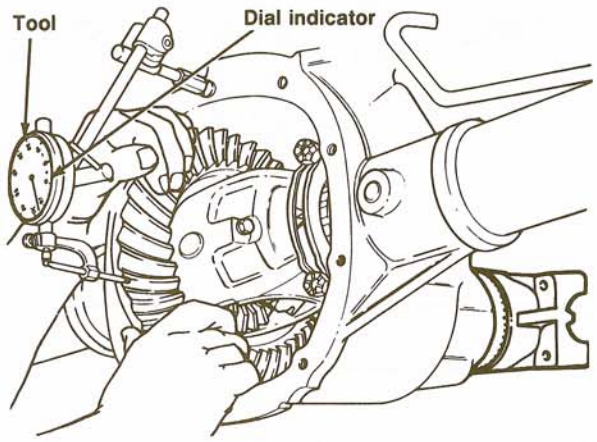

(42)

RING GEAR BACK FACE RUNOUT

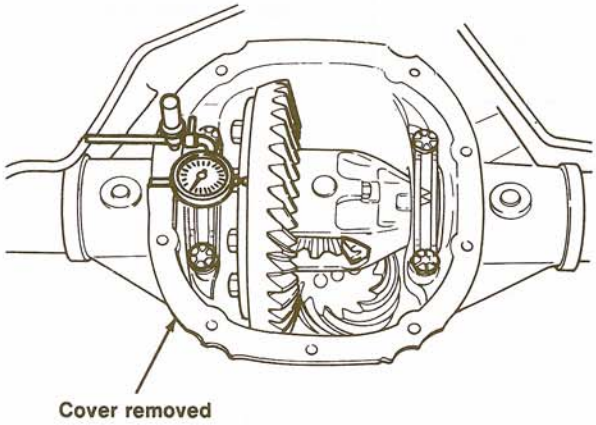

(43)

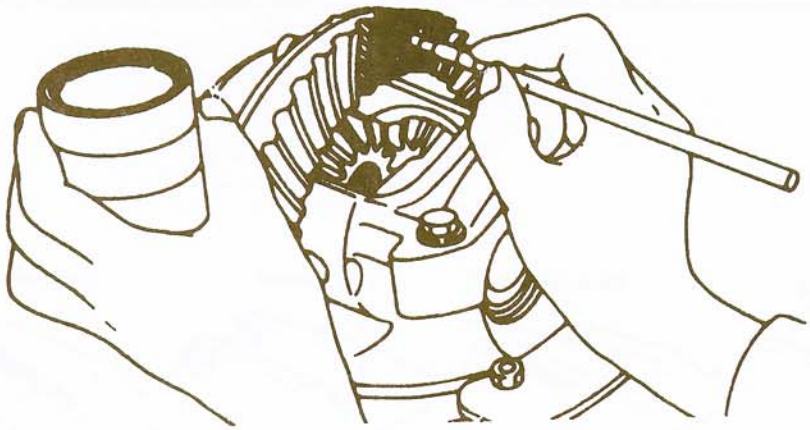

4. Mount a dial indicator on the housing as shown in **Figure 41** to measure ring and pinion gear backlash. Position the indicator plunger at right angles to a ring gear tooth on the drive side. Hold the pinion from turning with one hand and rotate the ring gear against the dial indicator with the other. Backlash should be 0.008-0.015 in. (0.20-0.38 mm), with 0.012-0.015 in. (0.304-0.381 mm) preferred for rear axle differentials. With front axle differentials, backlash should be 0.005-0.008 in. (0.13-0.20 mm). If the backlash reading does not meet these specifications, have the differential disassembled and adjusted.

Remount the dial indicator on the housing as shown in **Figure 42** to measure ring gear runout. Set the indicator gauge to zero, rotate the ring gear and record the reading. If the reading exceeds 0.003 in. (0.076 mm) for 1983-1984 models or 0.004 in. (0.102 mm) for 1985-on models, check for excessively tight ring gear bolts or dirt between the ring gear and case. If neither is present, the excessive runout may be caused by a warped ring gear or case, or worn differential bearings. Have the differential disassembled and adjusted.

Tooth Contact Pattern Inspection

1. Wipe all oil from the axle housing. Clean each ring gear tooth carefully.

2. Apply a light coat of gear marking compound to the drive side of the ring gear teeth (**Figure 43**).
3. Rotate the ring gear slowly in both directions to press the contact pattern of the teeth into the gear marking compound. The contact pattern should have the following characteristics:

a. Both drive and coast patterns should be fairly well centered on the teeth.
b. Some clearance between the top of the teeth and the top of the pattern is desirable.
c. There should be no distinct lines (indicating areas where pressure is high).
d. Marks on adjoining gear teeth should be directly opposite each other.

4. Compare the contact pattern pressed into the marking compound with those shown in **Figure 44**. The pattern need not be exactly as shown or described to be acceptable. An erratic pattern indicates that repairs are needed. If the pattern is not correct, have the differential disassembled and adjusted.

(44)

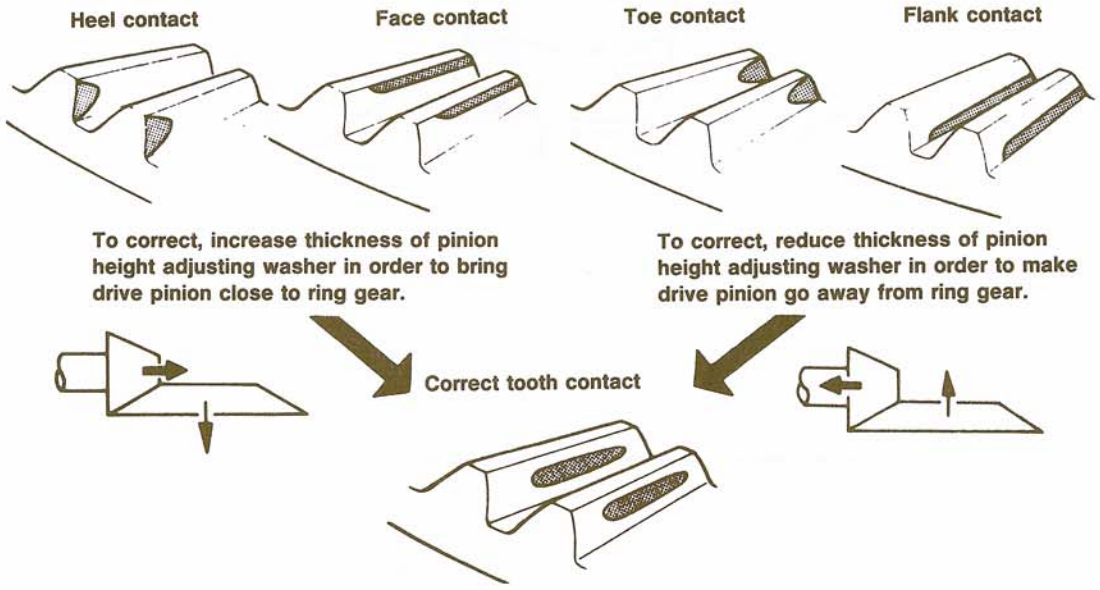

Table 1 TIGHTENING TORQUES

Fastener	ft.-lb.	N·m
Brake backing plate bolts	20-40	27-54
Differential		
Cover bolts		
Ratio tag bolt	15-25	20-34
All others	25-35	34-47
Fill plug	15-30	20-41
Lock bolt	15-30	20-41
Front drive shaft		
To front axle	61-87	83-118
To transfer case	61-87	83-118
Front spring hanger nut	100-155	136-210
Rear drive shaft		
Single cardan U-joint shaft		
Circular flange bolts	61-87	83-118
To front axle yoke	10-15	14-20
U-bolt nuts	8-15	11-20
Rear drive shaft		
Double cardan U-joint shaft		
To rear axle	61-87	83-118
To transfer case	61-87	83-118
Rear drive shaft		
CV type U-joint		
To rear axle	61-87	83-118
To transfer case	61-87	83-118
Shackle nuts	100-155	136-210
Shock absorber nuts	40-60	54-82
Spring U-bolt nuts	65-75	88-102
Stabilizer bar		
To bracket	30-42	40-57
To link assembly/or radius arm	40-60	54-82

CHAPTER TWELVE

FRONT SUSPENSION, STEERING AND DRIVE TRAIN (4-WHEEL DRIVE)

All 4-wheel drive vehicles use an independent front suspension with telescopic shock absorbers, coil springs, independent axle arms, radius arms, ball-joints, spindles and tie rods.

The front driving axle consists of 2 independent axle arm assemblies. One end of each axle arm is supported by the coil spring and radius arm. The other end of each axle arm is attached to the frame. Upper and lower ball-joints connect the spindle to the axle. Ball-joints require no lubrication.

Telescopic shock absorbers installed between brackets on the frame rail and radius arm control suspension spring movement. Hydraulic shock absorbers are standard, with low-pressure gas shocks optional.

An optional stabilizer bar mounts behind the axle and connects to the inside of the radius arm. The stabilizer bar maintains the front axle side position relative to the frame.

Figure 1 shows the major components of the front suspension. Tightening torques (**Table 1**) are provided at the end of the chapter.

FRONT SUSPENSION

Shock Absorber Removal/Installation

Always use new rubber insulators/bushings when installing new shock absorbers. Refer to **Figure 2** (typical) for this procedure.

1. Set the parking brake. Securely block both rear wheels so the truck will not roll in either direction. Raise the front of the vehicle with a jack and place it on jackstands.
2. Remove the nut and washer holding the upper shock absorber stud to the spring seat.
3. Remove the nut and bolt holding the lower shock absorber eye to the radius arm and lower shock absorber bracket.
4. Compress the shock absorber slightly and remove it from the vehicle.
5. Check the shock absorber spring seat insulator bushing and replace as necessary.
6. Installation is the reverse of removal. Tighten fasteners to specifications (**Table 1**). Remove the jackstands and lower the vehicle to the ground.

1

FRONT SUSPENSION (4-WHEEL DRIVE)

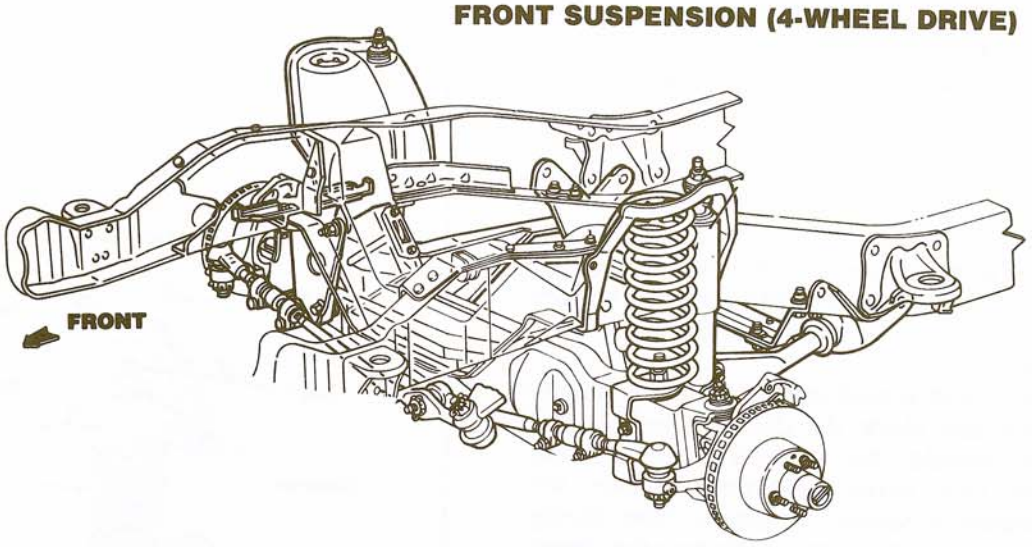

2

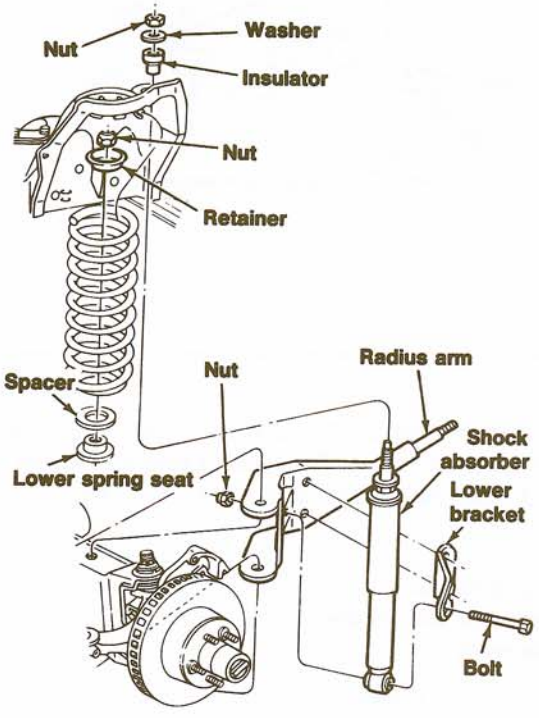

Shock Absorber Operational Check

Shock absorbers can be routinely checked while installed on the vehicle. Bounce the front of the vehicle up and down several times and release. Repeat this action with the rear of the vehicle. In either case, the vehicle should not continue to bounce more than twice. Excessive bouncing is an indication of worn shock absorbers. This test is not conclusive, since the spring stiffness of the vehicle makes it difficult to detect marginal shock absorbers.

If there is any doubt about their serviceability, remove the shock absorbers and perform the following procedure. If a shock absorber is found to be defective, replace all shocks on that end of the vehicle at the same time. If one shock absorber has failed because of physical damage, both should be replaced at the same time, even if the remaining shock appears to be satisfactory.

NOTE

Comparison of a used shock absorber believed to be good with a new shock absorber is not a valid test. The new shock absorber will tend to offer more resistance due to the greater friction of the new rod seal.

1. Inspect the shock absorber piston rod for bending, galling and abrasion. Discard the shock

12

absorber if any of these conditions are noted.
2. Check the outside of the shock absorber for fluid leakage. A light film of fluid on the rod is normal, but severe leakage requires replacement.
3. Holding the shock absorber in the installed position, completely extend the rod, then invert the shock and completely compress the rod. Repeat this step several times to expel any trapped air.
4. Secure the lower end of the shock absorber in a vise with protective jaws. If protective jaws are not available, place the shock between soft wooden blocks or wrap it in shop cloths before clamping it in the vise.
5. Compress and extend the piston rod as rapidly as possible and check the damping action. The resistance should be smooth and uniform throughout each stroke, and the resistance felt during extension should be greater than during compression. Repeat this step with the other shock absorber. Both shock absorbers in a pair should feel the same.
6. If the damping action is erratic or resistance to rapid extension/compression is very low (or the same in both directions), replace the shock absorbers as a set.

Coil Spring
Removal/Installation

Refer to **Figure 3** (typical) for this procedure.
1. Set the parking brake. Securely block both rear wheels so the truck will not roll in either direction. Raise the front of the vehicle with a jack and place it on jackstands. Position the jackstands under the frame, with the jack located under the axle.
2. Raise the jack enough to compress the spring.
3. Remove the lower shock absorber fastener and slide the shock absorber from the bracket.
4. Remove the nut holding the spring to the axle and radius arm. Remove the retainer.
5. Slowly lower the axle as far as it will go to remove spring tension without stretching the brake caliper hose and tube assembly. If necessary, remove the brake caliper and wire it to the suspension out of the way. See *Caliper Removal/Installation*, Chapter Thirteen.
6. If necessary, remove the axle arm stud (and washer on left axle) to provide sufficient clearance for spring removal.
7. Rotate the upper coil of the spring from upper spring seat tabs and remove it from the vehicle.
8. Remove the spacer and seat.

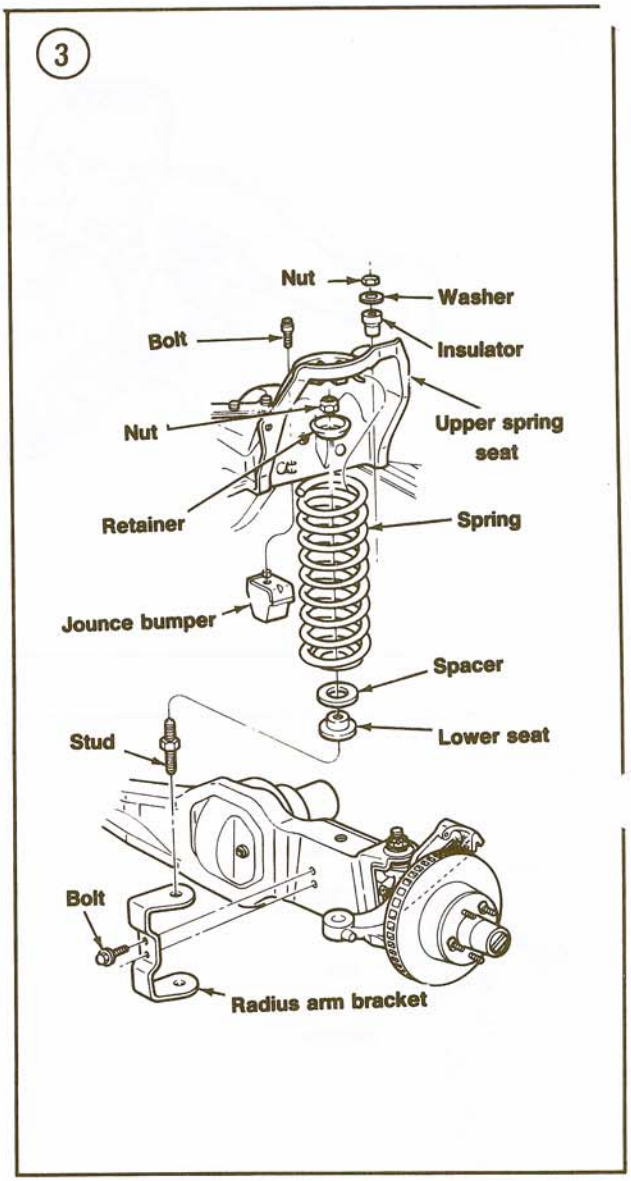

9. Installation is the reverse of removal. Tighten all fasteners to specifications (**Table 1**). Remove the jack and jackstands and lower the vehicle to the ground.

Stabilizer Bar
Removal/Installation
(Ranger)

Refer to **Figure 4** for this procedure.
1. Set the parking brake. Securely block both rear wheels so the truck will not roll in either direction. Raise the vehicle with a jack and place it jackstands.

4

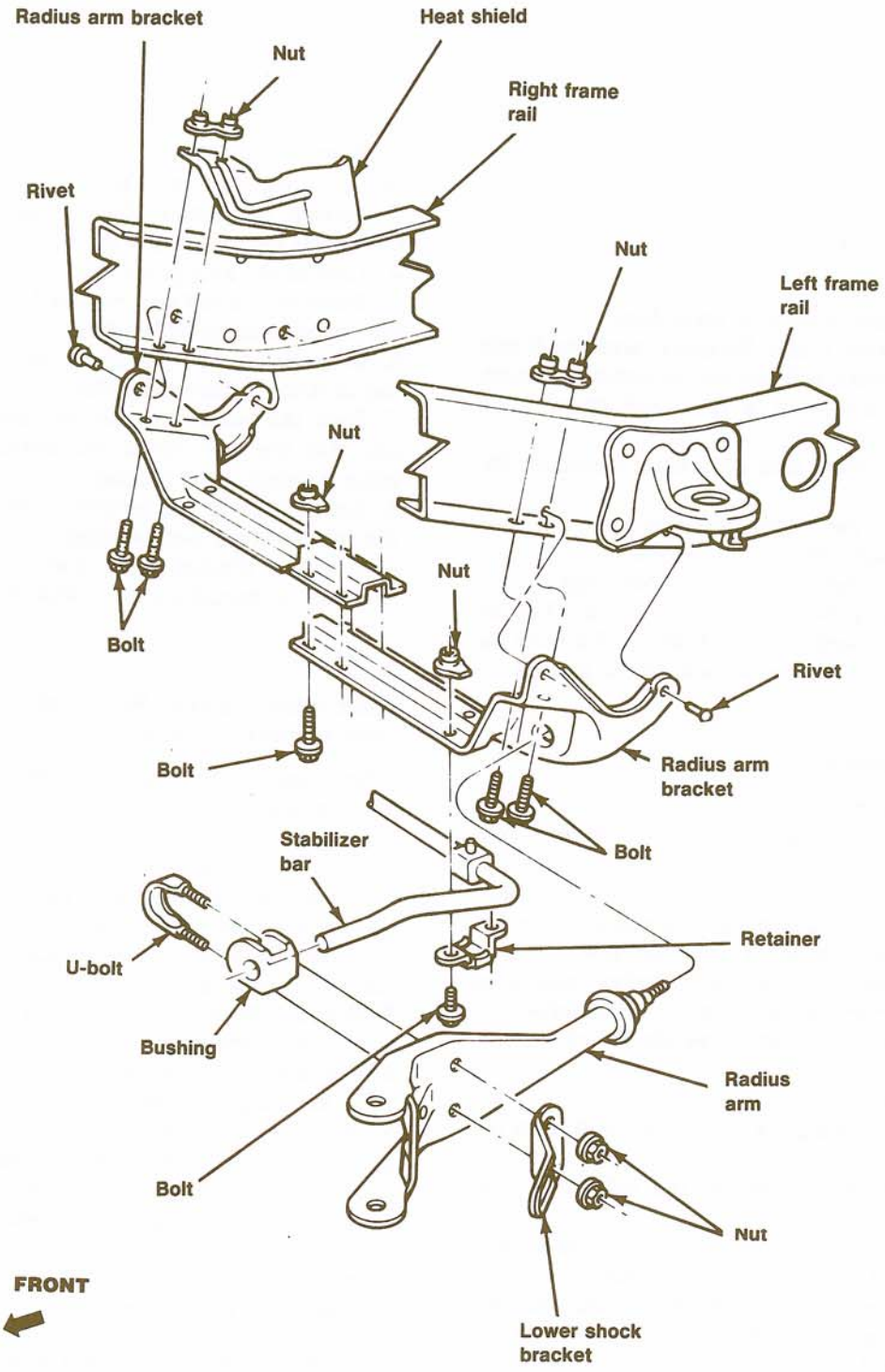
Radius arm bracket
Heat shield
Nut
Right frame rail
Rivet
Nut
Left frame rail
Nut
Nut
Bolt
Rivet
Bolt
Radius arm bracket
Bolt
Stabilizer bar
Retainer
U-bolt
Bushing
Radius arm
Bolt
Nut
FRONT
Lower shock bracket

2. Remove the nuts and U-bolts holding the lower shock absorber/stabilizer bar bushings to the radius arms.
3. Remove the stabilizer mounting bracket on each side of the vehicle.
4. Remove the stabilizer bar and bushings.
5. Installation is the reverse of removal. Tighten all fasteners to specifications (**Table 1**). Remove the jackstands and lower the vehicle to the ground.

Stabilizer Bar Removal/Installation (Bronco II)

Refer to **Figure 5** for this procedure.
1. Set the parking brake. Securely block both rear wheels so the truck will not roll in either direction. Raise the vehicle with a jack and place it on jackstands.
2. Unbolt the center and right hand stabilizer bar retainers.
3. Disconnect the stabilizer bar at the link assembly on each side of the vehicle.
4. Remove the stabilizer bar and bushings.
5. Installation is the reverse of removal. Tighten all fasteners to specifications (**Table 1**). Remove the jackstands and lower the vehicle to the ground.

Radius Arm Removal/Installation

Refer to **Figure 6** for this procedure.
1. Set the parking brake. Securely block both rear wheels so the truck will not roll in either direction. Raise the front of the vehicle with a jack and place it on jackstands. Position the jackstands under the frame, with the jack under the front axle.
2. Remove the lower shock absorber mounting bolt and nut from the shock absorber bracket.
3. Remove the coil spring as described in this chapter.
4. Loosen the axle pivot bolt.
5. Remove the spring lower seat and stud from the radius arm.
6. Unbolt the radius arm at the axle and front bracket.
7. Remove the nut, rear washer and insulator from the rear side of the radius arm bracket.
8. Remove the radius arm from the vehicle. Remove the inner insulator and retainer from the radius arm stud.
9. Installation is the reverse of removal. Tighten all fasteners to specifications (**Table 1**).

Radius Arm Insulator Replacement

Refer to **Figure 6** for this procedure.
1. Set the parking brake. Securely block both rear wheels so the truck will not roll in either direction. Raise the front of the vehicle with a jack and place it on jackstands. Position the jackstands under the frame, with the jack under the front axle.
2. Remove the lower shock absorber mounting bolt and nut from the shock absorber bracket.
3. Loosen the upper shock absorber pivot bolt. Compress the shock absorber.
4. Loosen the axle pivot bolt.
5. Remove the nut and washer holding the rear of the radius arm to its bracket.
6. Remove the outer insulator and spacer. On right radius arms, remove the shield.
7. Push the radius arm and axle assembly forward and take the arm out of the bracket. Remove the inner insulator and retainer.
8. Installation is the reverse of removal. Support the vehicle at the front springs before tightening the axle pivot bracket bolt and nut. Tighten all fasteners to specifications (**Table 1**).

Front Wheel Spindle, Shaft and Joint Removal/Installation

See **Figure 7** (left shaft/joint assembly) or **Figure 8** (right shaft/joint assembly) as required for this procedure.
1. Set the parking brake. Securely block both rear wheels so the truck will not roll in either direction. Loosen the front wheel lug nuts.
2. Raise the front of the vehicle with a jack and place it on jackstands.
3. Remove the hub ornaments (if so equipped) and wheel/tire assemblies.
4. Remove the brake caliper (Chapter Thirteen). Wire the caliper to the frame out of the way.
5. Remove the hub, rotor and wheel bearing assembly as described in this chapter.
6. Remove the nuts holding the spindle to the steering knuckle. Tap the spindle lightly with a hammer to jar it from the knuckle. Remove the splash shield.
7. Right side of vehicle:
   a. Pull the shaft and joint assembly from the carrier (**Figure 9**).
   b. Remove and discard the keystone clamp from

5

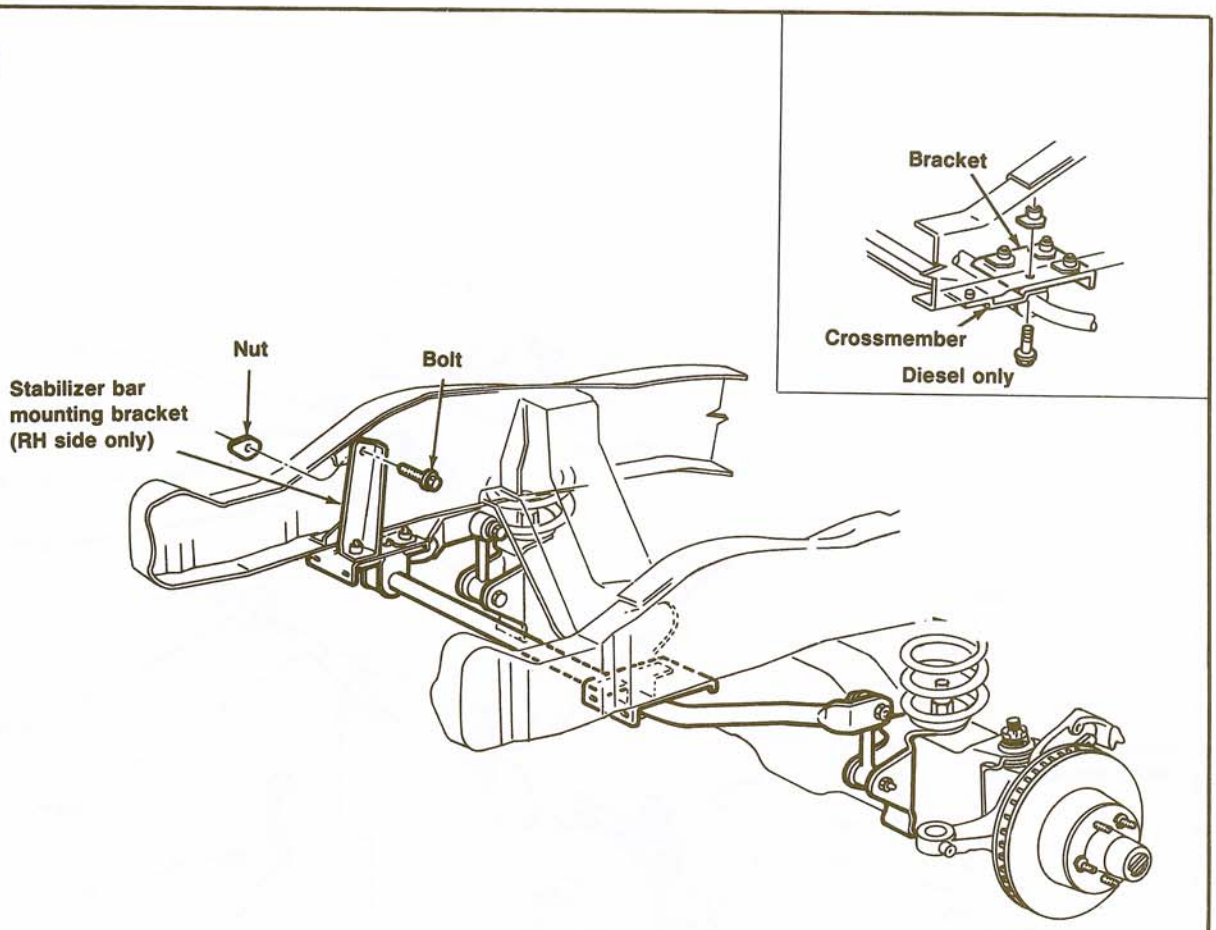
Nut
Bolt
Stabilizer bar mounting bracket (RH side only)
Bracket
Crossmember
Diesel only

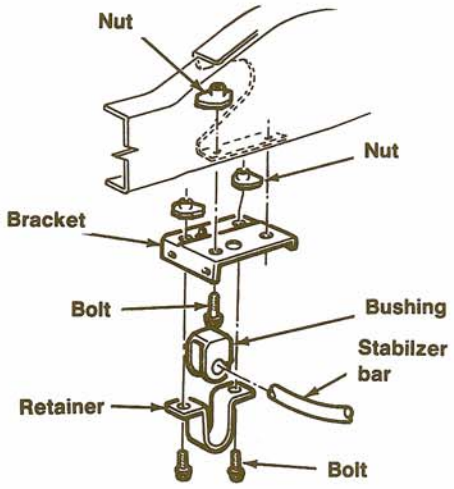
Nut
Nut
Bracket
Bolt
Bushing
Stabilzer bar
Retainer
Bolt

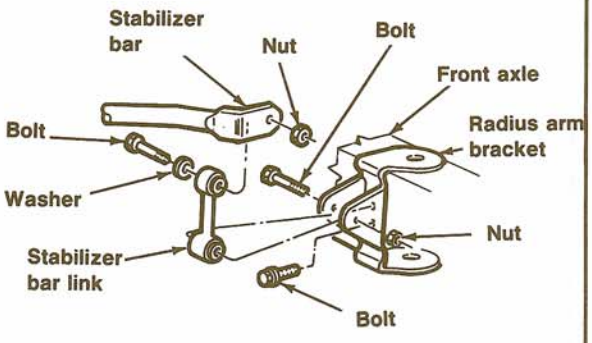
Stabilizer bar
Nut
Bolt
Front axle
Radius arm bracket
Bolt
Washer
Nut
Stabilizer bar link
Bolt

12

6

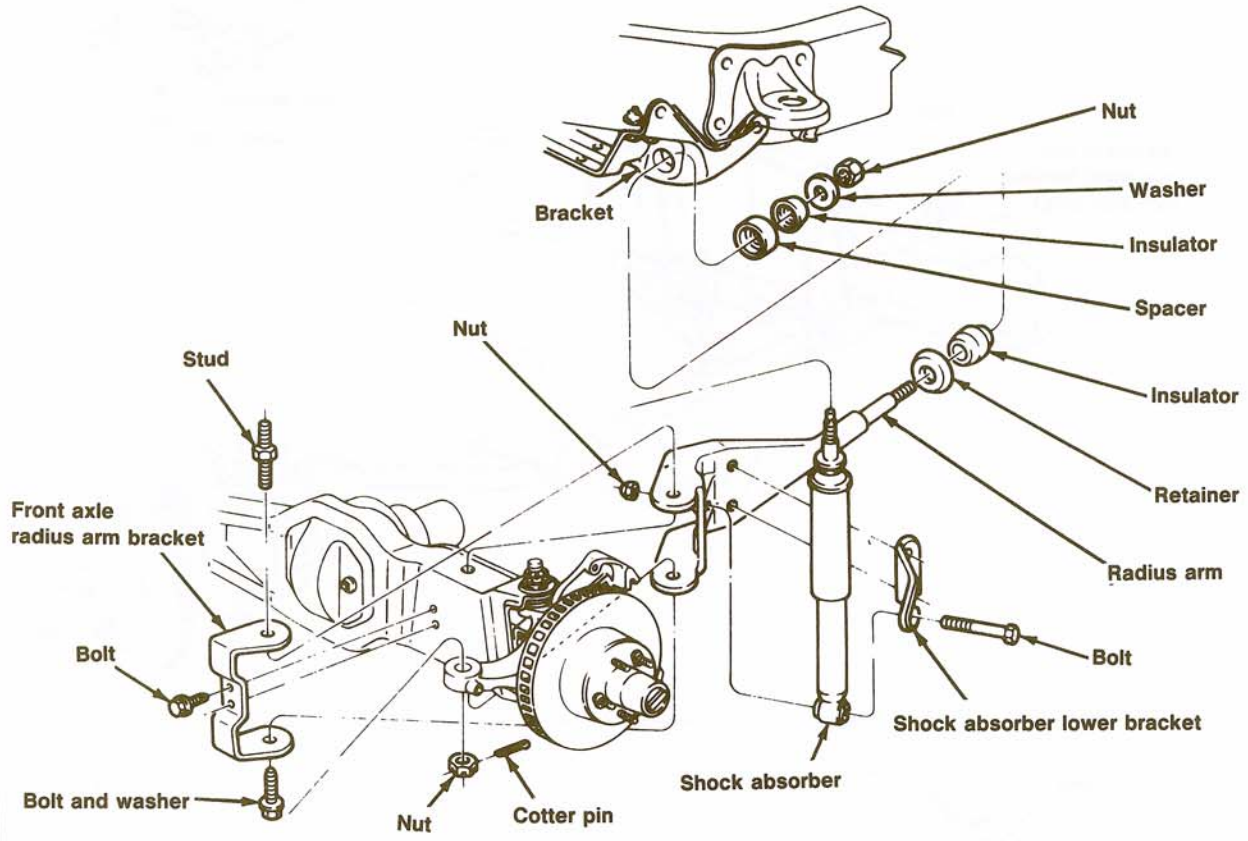
Nut
Washer
Insulator
Spacer
Bracket
Nut
Stud
Insulator
Retainer
Front axle
radius arm bracket
Radius arm
Bolt
Bolt
Shock absorber lower bracket
Shock absorber
Bolt and washer
Nut
Cotter pin

7

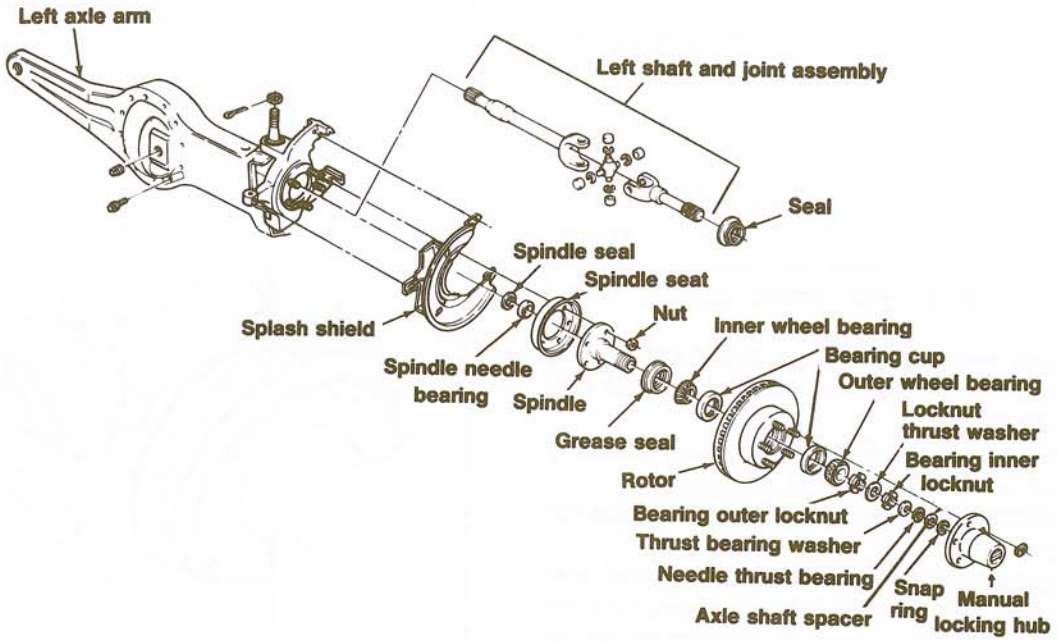
Left axle arm
Left shaft and joint assembly
Seal
Spindle seal
Spindle seat
Nut
Inner wheel bearing
Splash shield
Bearing cup
Outer wheel bearing
Spindle needle bearing
Spindle
Locknut thrust washer
Grease seal
Bearing inner locknut
Rotor
Bearing outer locknut
Thrust bearing washer
Needle thrust bearing
Snap ring
Manual locking hub
Axle shaft spacer

8

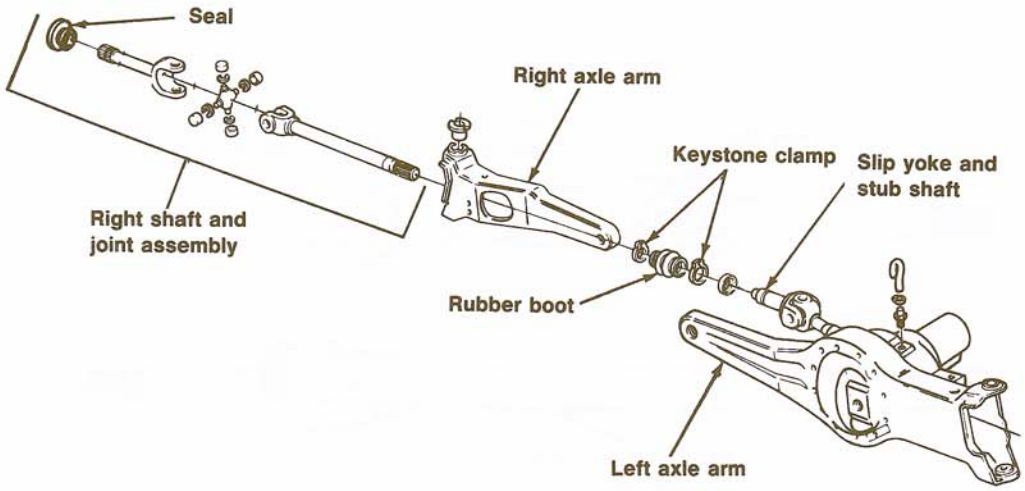
Seal
Right axle arm
Keystone clamp
Slip yoke and stub shaft
Right shaft and joint assembly
Rubber boot
Left axle arm

12

c. Slide the rubber boot onto the stub shaft and pull the shaft/joint assembly from the stub shaft splines. See **Figure 10**.

8. Left side of vehicle:
   a. Pull shaft and joint assembly from the carrier.
   b. Separate the shaft and joint from the spindle and remove from the vehicle.

9. If spindle oil seal and/or needle bearing requires replacement:
   a. Clamp the spindle in a vise with protective jaws. If protective jaws are not available, place spindle between soft wooden blocks or wrap in shop cloths before securing in the vise.
   b. Attach seal remover part No. 1175-A to a slide hammer and remove the oil seal and needle bearing.
   c. If shaft seal requires replacement, carefully drive it off the shaft with a hammer.

10. Installation is the reverse of removal, plus the following:
   a. If spindle oil seal, needle bearing or shaft seal were removed, install a new bearing (lettered side up) with a suitable installer. Install the oil seal with its lip facing up. Coat seal lip with Ford Multi-purpose Long-life lubricant.

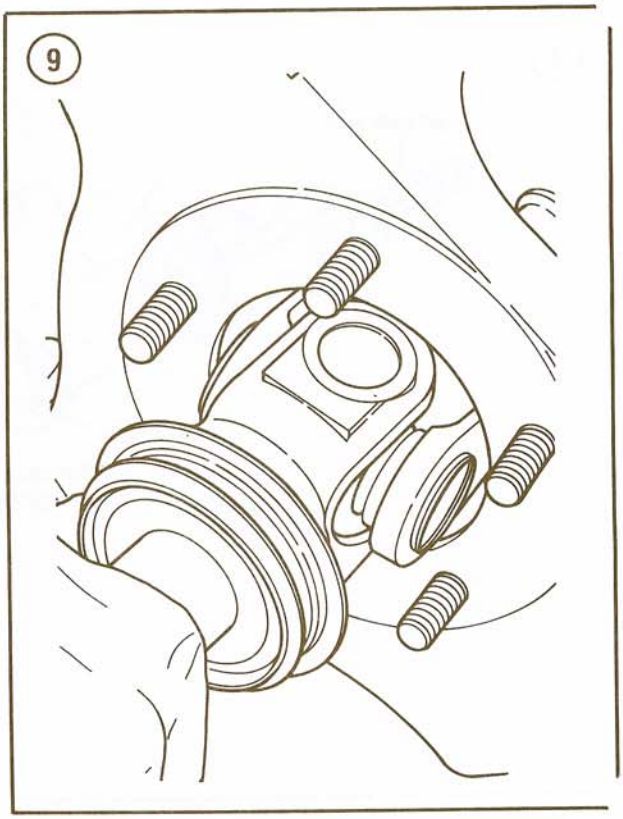

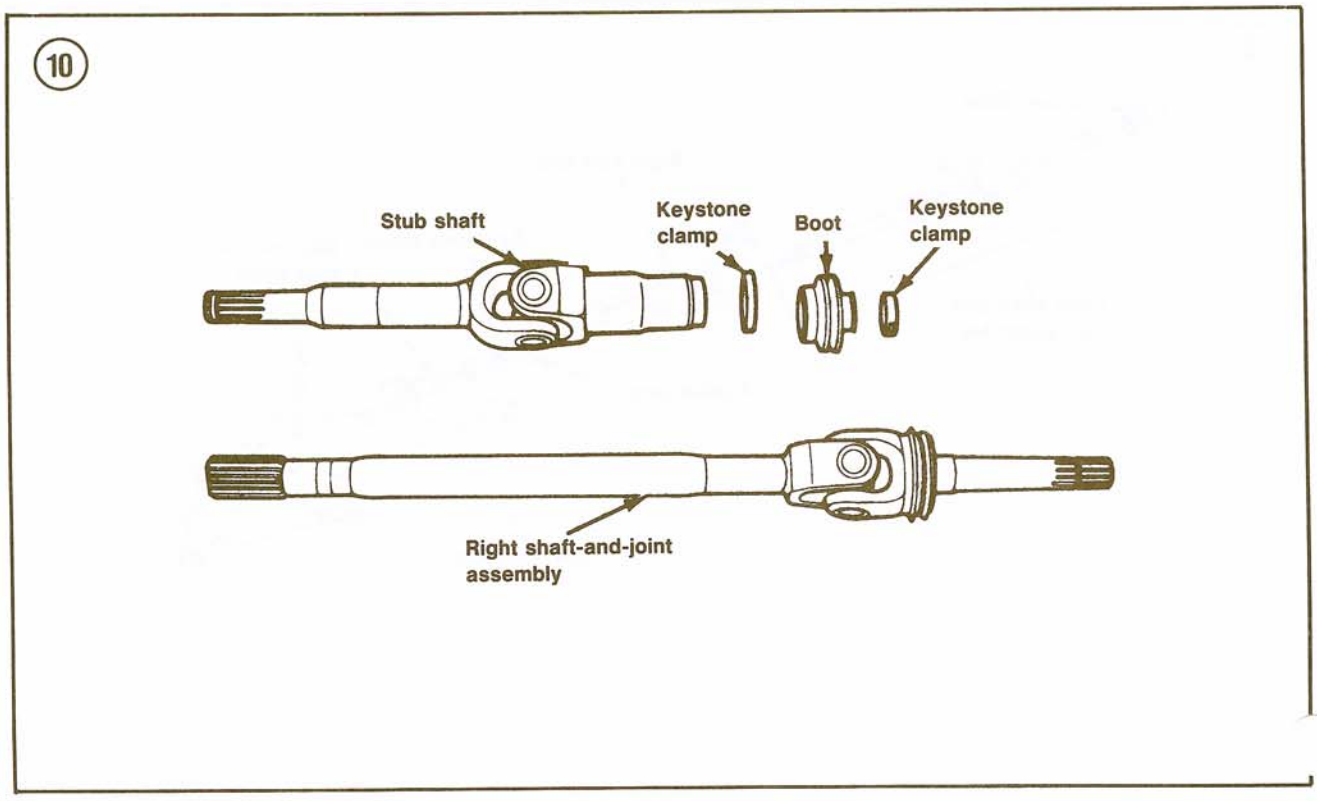

Install a new shaft seal with installer part No. T83T-3132-A and a hydraulic press.

b. Install a new keystone clamp on the right side stub shaft slip yoke. Secure clamp with pliers part No. T63P-9171-A or equivalent.
c. Tighten all fasteners to specifications (**Table 1**).
d. Adjust the wheel bearings as described in this chapter.

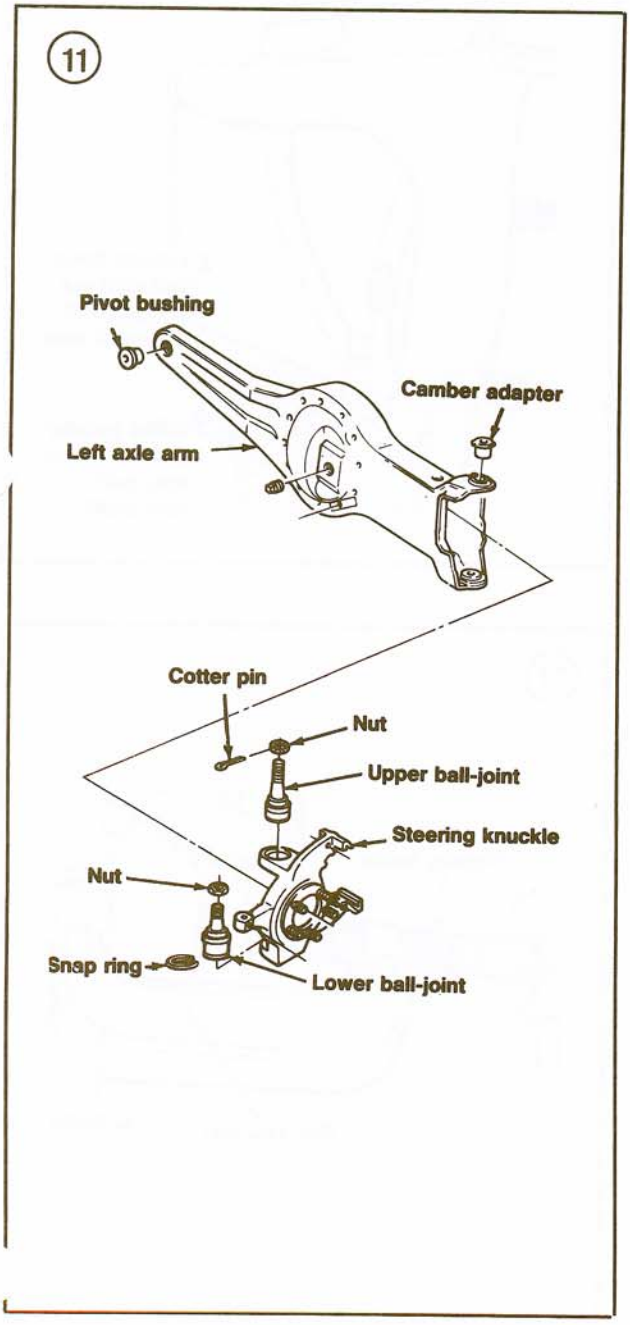

Steering Knuckle Removal

Refer to **Figure 11** for this procedure.

1. Remove the spindle and shaft/joint assembly as described in this chapter.

CAUTION

During the next step, do not tap hard enough to damage the ball joint threads

2. Remove and discard the tie rod castellated nut cotter pin. Remove the nut and tap on the tie rod ball stud to separate it from the steering arm.
3. Remove and discard the cotter pin and castellated nut from the upper ball-joint stud. See 1, **Figure 12**.
4. Loosen the lower ball-joint nut until it is flush with the top of the stud (2, **Figure 12**).

NOTE

Do not use a fork-type tool to separate the steering knuckle from the ball-joint. It will damage the ball-joint socket and seal.

5. Tap the knuckle near the lower ball-joint to break it loose from the ball stud (3, **Figure 12**). Remove the lower ball-joint nut. Remove the knuckle.

NOTE

If camber adjuster cannot be removed by hand, use a Pitman arm puller in Step 6.

6. Note the orientation of the camber adjuster and lift it off the steering knuckle (4, **Figure 12**).

Steering Knuckle Installation

Refer to **Figure 11** for this procedure.

1. Position the knuckle to the axle arm assembly. Install the camber adjuster on the top ball-joint stud, maintaining the same orientation noted during removal.

NOTE

For positive camber, the adjuster arrow should point toward the outside of the vehicle. For negative camber, the arrow should point toward the inside of the vehicle. Zero camber bushings have no arrow and should be oriented so slots engage the yoke lugs.

2. Install a new nut on the bottom ball-joint and tighten to 40 ft.-lb. (54 N•m).
3. Fit an appropriate size socket over the camber bushing and seat the bushing by tapping the socket with a hammer.
4. Install a new nut on the upper ball-joint stud. Tighten nut to specifications (**Table 1**). If slot in nut does not align with cotter pin hole in stud, tighten nut to align holes and install a new cotter pin.
5. Tighten lower ball-joint to specifications (**Table 1**) and install a new cotter pin.
6. Reconnect the tie rod stud to the steering arm. Install the castellated nut and a new cotter pin.
7. Install the spindle and shaft/joint assembly as described in this chapter. Have front-end alignment checked by a Ford dealer or alignment shop.

Ball-joint Replacement

CAUTION
Do not heat the axle or ball-joint.

1. Remove the steering knuckle as described in this chapter.

NOTE
When replacing both ball-joints, always remove the lower one first.

2. Secure the knuckle in a soft-jawed vise and remove the snap ring (if so equipped) from the lower ball-joint socket.
3. Install C-frame (part No. D79T-3010-AA), forcing screw (part No. D79T-3010-AE) and ball-joint remover (part No. T83T-3050-A) on lower ball-joint as shown in **Figure 13**.
4. Tighten forcing screw until lower ball-joint is forced from the steering knuckle.
5. Repeat Step 3 and Step 4 on the upper ball-joint.
6. Clean the steering knuckle bore. Insert the lower ball-joint in the knuckle as straight as possible.
7. Install C-frame (part No. D79T-3010-AA), forcing screw (part No. D79T-3010-AE), ball-joint installer (part No. T83T-3050-A) and receiver cup (part No. T80T-3010-A3) in the knuckle as shown in **Figure 14**.
8. Tighten forcing screw until lower ball-joint is firmly seated, then install the snap ring (if so equipped).

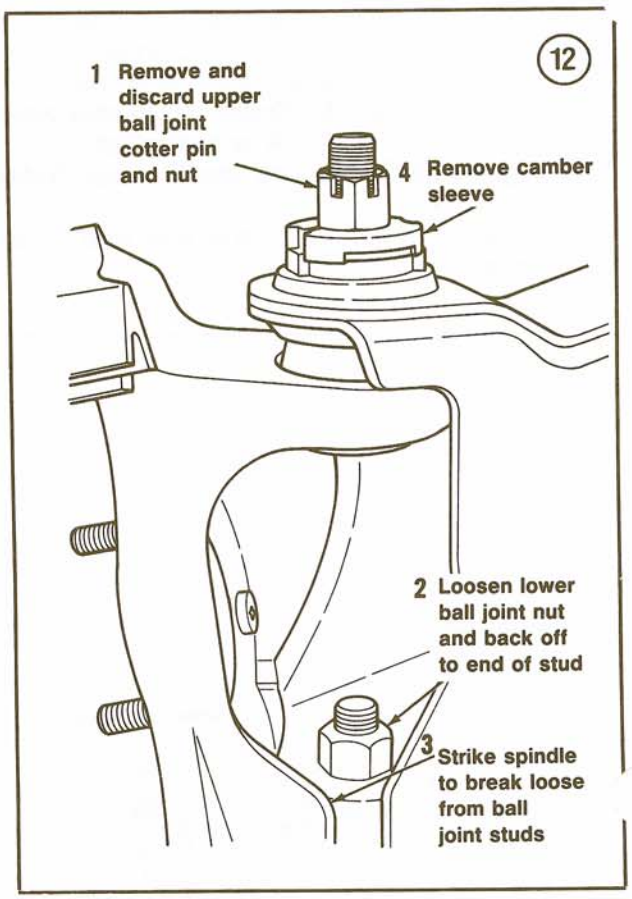

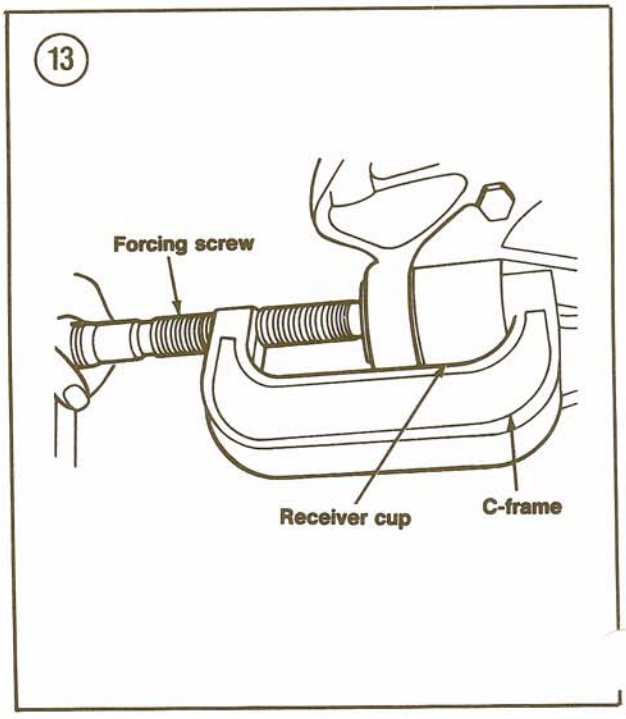

14

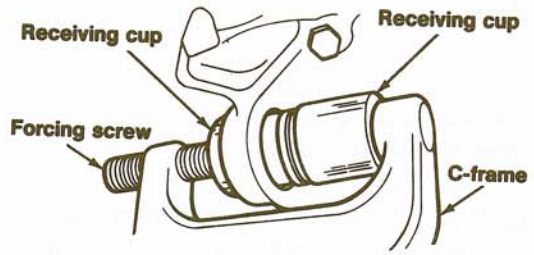

9. Position the upper ball-joint in the knuckle and repeat Step 7 and Step 8.
10. Install the steering knuckle as described in this chapter. Have the front-end alignment checked by a Ford dealer or alignment shop.

Front Drive Axle
Removal/Installation

Refer to **Figure 15** for this procedure.
1. Loosen the front wheel lug nuts.
2. Set the parking brake. Securely block both rear wheels so the truck will not roll in either direction. Raise the vehicle with a jack and place it on jackstands positioned under the radius arm brackets.
3. Disconnect the drive shaft from the front axle yoke.
4. Remove the hub ornaments, if so equipped. Remove the wheel/tire assemblies.
5. Remove the brake calipers (Chapter Thirteen).
6. Remove the cotter pin and nut holding the steering linkage to the knuckle. Discard the cotter pin. Disconnect the linkage from the knuckle.
7. Remove the coil spring as described in this chapter.

15

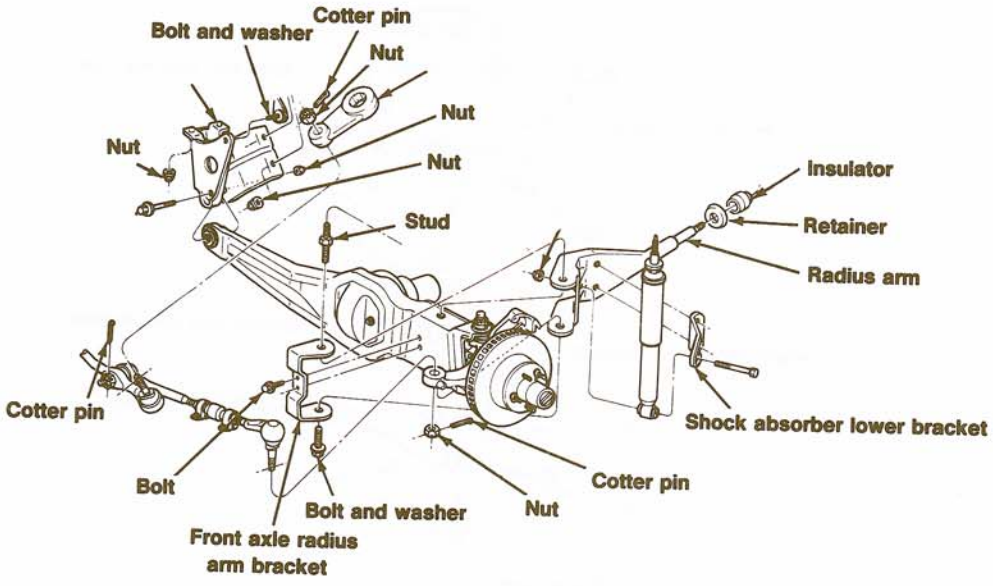

8. Disconnect the shock absorber from the radius arm bracket.
9. Remove the radius arm and bracket as described in this chapter.
10. Remove the pivot bolt holding the right-hand axle assembly to the crossmember.
11. Remove the keystone clamps holding the rubber boot in place. Slide the rubber boot to one side and disconnect the right-hand drive shaft from the slip yoke assembly. Lower the jack and remove the right axle arm assembly.
12. Place another jack under the differential housing. Remove the bolt holding the left-hand axle arm to the crossmember. Lower the jacks and remove the left-hand axle arm assembly.
13. Installation is the reverse of removal. Tighten all fasteners to specifications (**Table 1**).

Right-hand Axle Pivot Bracket Removal/Installation

Refer to **Figure 16** for this procedure.
1. Remove the coil spring, radius arm and front drive axle as described in this chapter.
2. Remove the attaching nuts. Remove the upper bolt and retainer. Remove the side bolt and retainer. Remove and discard the lower bolt and retainer. Remove the pivot bracket.
3. Position the bracket on the crossmember. Install the upper bolt and retainer as shown in **Figure 16**. Install side bolt and retainer so bolt head faces engine oil pan. Tighten nuts to specifications (**Table 1**).

CAUTION

Be sure to use a Grade 8 bolt during the next step. Weaker bolts may fail.

4. Drill out the lower bolt mounting hole in the bracket and crossmember with a 9/16 in. drill. Install 9/16 - 12×1 1/2 Grade 8 replacement bolt with 2 washers and nut. Tighten to specifications (**Table 1**).
5. Install front drive axle, radius arm and coil spring as described in this chapter. Have the front-end alignment checked by a Ford dealer or alignment shop.

16

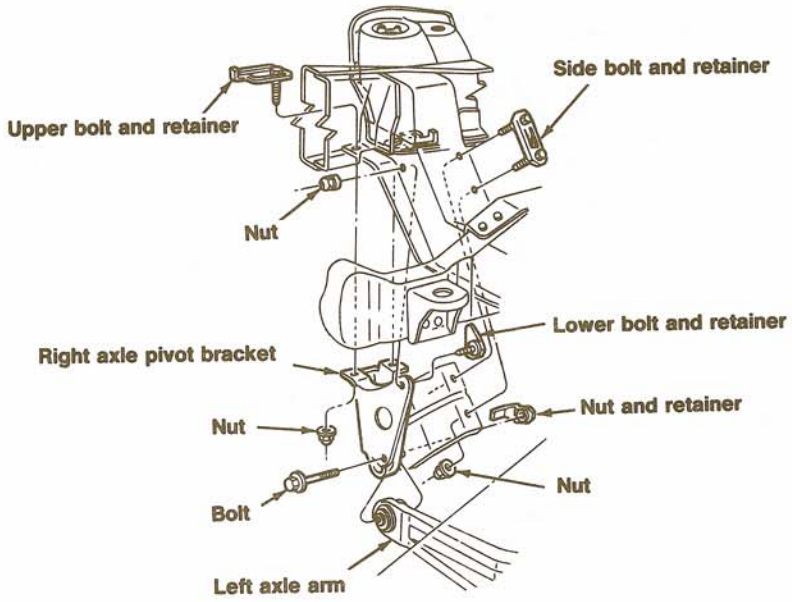

Left-hand Axle Pivot Bracket Removal/Installation

Refer to **Figure 17** for this procedure.

1. Remove the coil spring, radius arm and front drive axle as described in this chapter.
2. Use a 9/16 in. drill to remove the rivets and enlarge the mounting holes in the bracket and crossmember to 9/16 in. Remove the pivot bracket.

CAUTION

Be sure to use a Grade 8 bolt during the next step. Weaker bolts may fail.

3. Position the pivot bracket on the crossmember. Install 9/16 - 12×1 1/2 in. Grade 8 replacement bolts in the rivet holes. Install 2 washers and nut on each bolt. Tighten to specifications (**Table 1**).
4. Install the front drive axle, radius arm and coil spring as described in this chapter. Have front-end alignment checked by a Ford dealer or alignment shop.

WHEEL ALIGNMENT

Several suspension angles affect the running and steering of the front wheels. These angles must be properly aligned to prevent excessive wear, as well as to maintain directional stability and ease of steering. The angles are:

a. Caster.
b. Camber.
c. Toe.
d. Steering axis inclination.
e. Steering lock angles.

Steering axis inclination and steering lock angles are built in and cannot be adjusted. These angles are measured to check for bent suspension parts. Caster and camber are designed into the front axle and checked with the vehicle at its normal operating height. Caster is not adjustable. Camber is adjusted by replacing a camber adjuster sleeve installed in the spindle upper ball-joint bore. This camber angle should not be adjusted without a front-end rack. Toe can be adjusted at home as described in this section, but the procedure given should be used only as a temporary measure to allow you to drive the vehicle to a dealer or alignment shop where accurate measurements can be made and set.

WARNING

Do not attempt to adjust alignment angles by bending or twisting twin I-beam axles, suspension or steering linkage components.

Pre-Alignment Check

Adjustment of the steering and various suspension angles is affected by several factors. For this reason, steering and handling problems which may seem to be caused by misalignment can result from other factors which are easily corrected without expensive equipment. The following procedure should be carried out whenever steering, handling or tire wear problems exist. It should also be performed before having the alignment checked or prior to adjusting the toe setting.

1. Check tire pressure (with tires cold) and adjust to the specified pressure, if necessary. Both front tires should be the same size, ply rating and load range.
2. Check tire condition. See *Tire Wear Analysis*, Chapter Two.
3. Set the parking brake. Securely block both rear wheels so the truck will not roll in either direction. Raise the front of the vehicle with a jack to lift the wheels off the ground. Place jackstands beneath the I-beam axle under the coil spring (**Figure 18**). Grasp one tire at the front and rear. Push the wheel in and pull it out. If there is free play between the brake drum and backing plate (drum brakes) or the hub/disc and spindle (disc brakes), check and

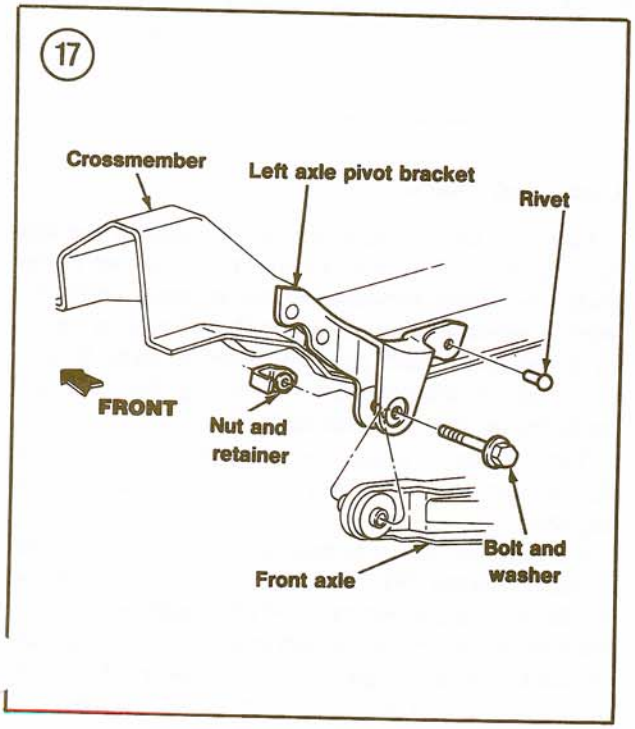

adjust the wheel bearings as described in this chapter. Repeat this step with the other front wheel.

4. With the wheels still off the ground, grasp one tire at the bottom and move it in and out while watching the lower spindle arm and axle jaw. See **Figure 18**. If the spindle moves more than 1/32 in. at the bottom relative to the axle, replace the spindle lower ball-joint as described in this chapter.
5. Repeat Step 4 but grasp the tire at the top and move it in and out while watching the upper spindle arm and axle jaw. If spindle movement exceeds 1/32 in. at the top relative to the axle, replace the upper ball-joint as described in this chapter.
6. Check the radial and lateral runout of both front tires with a dial indicator. Place the indicator plunger against the tire tread and slowly rotate the wheel. Then position the indicator against the outer sidewall of the tire and slowly rotate the wheel. If either the radial or lateral runout exceeds 0.080 inch:

a. Deflate the tire.
b. Rotate the tire 90° on the rim.
c. Lubricate the rim with liquid soap.
d. Reinflate the tire to the specified pressure.
e. Recheck runout.
f. If runout is still excessive, check for foreign material between the wheel and hub.
g. If runout is still excessive, check for a bent wheel. If the wheel is good, replace the tire.

7. Check all suspension components, steering components and linkage for wear, damage or improper adjustment. Replace if required as described in this chapter.
8. Check the steering gearbox mounting bolt torque. Retighten as required.
9. Check the radius arm and bushings for wear or damage. Replace if required as described in this chapter.
10. Make sure the suspension is properly lubricated. See Chapter Three.
11. Check brakes for proper operation. See Chapter Thirteen.
12. Check the shock absorbers for proper operation as described in this section.
13. Check wheels and balance as required.
14. Check rear suspension for looseness.

Front tire wear problems can indicate alignment problems. These are covered under *Tire Wear Analysis*, Chapter Two.

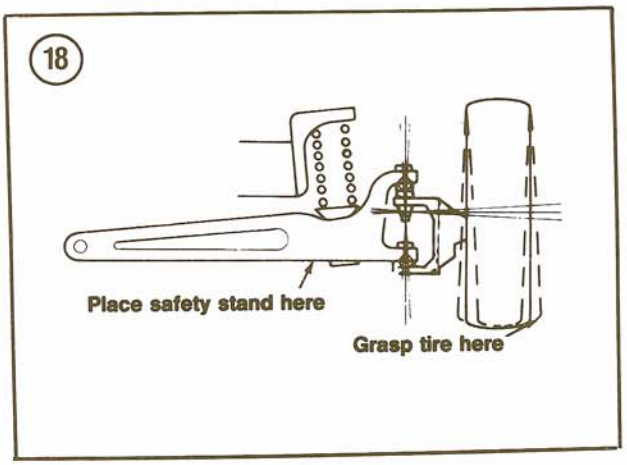

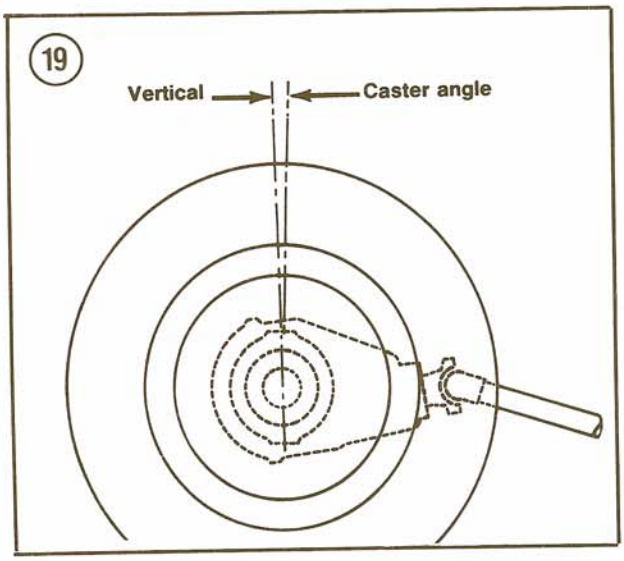

Caster and Camber

Caster is the inclination from vertical of the line through the ball-joints (**Figure 19**). Positive caster shifts the wheel forward; negative caster shifts the wheel rearward. Caster causes the wheels to return to a straight-ahead position after a turn. It also prevents the wheels from wandering due to wind, potholes or uneven road surfaces.

The caster angle is designed into the Ranger/Bronco II front axle and cannot be adjusted.

Camber is the inclination of the wheel from vertical (**Figure 20**). With positive camber, the top of the tire leans outward. With negative camber, the top of the tire leans inward. Excessive camber causes tire wear. Negative camber wears the insid of the tire; positive camber wears the outside.

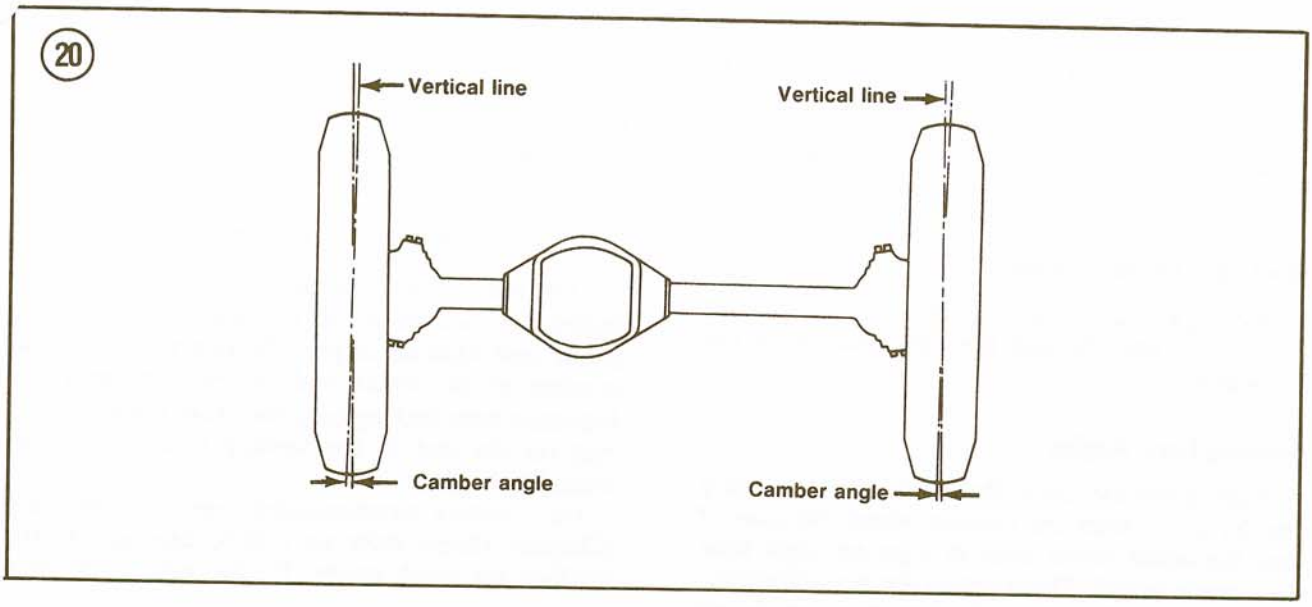

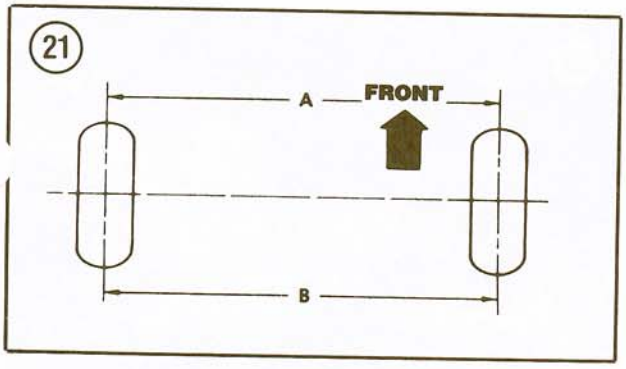

Camber adjustment requires the use of an alignment rack and special tools. It should not be attempted by the home mechanic. Whenever the spindle is removed and installed as described in this chapter, take the vehicle to a Ford dealer or alignment shop for camber adjustment.

Toe

Since the front wheels tend to point outward when the vehicle is moving in a forward direction, the distance between the front edges of the tire (A, **Figure 21**) is generally slightly less than the distance between the rear edges (B, **Figure 21**) when the vehicle is at rest.

Toe Adjustment

Although toe adjustment requires only a simple homemade tool, it usually is not worth the trouble for home mechanics. Alignment shops include toe adjustment as part of the alignment procedure, so you probably will not save any money by doing it yourself. The procedure described here can be used for an initial toe setting after spindle or ball-joint replacement.

1. With the steering wheel centered, roll the vehicle forward about 15 ft. on a smooth, level surface.
2. Mark the center of the tread at the front and rear of each tire.
3. Measure the distance between the forward chalk marks (A, **Figure 21**). Use 2 pieces of telescoping aluminum tubing. Telescope the tubing so each end contacts a chalk mark. Using a sharp center scribe, mark the small diameter tubing where it enters the large diameter tubing.
4. Measure between the rear chalk marks with the telescoping tubes. Make another mark on the small tube where it enters the large one. The distance between the 2 scribe marks is the toe-in and must be divided in half to determine the amount of toe at each wheel.

NOTE

Toe should be set at 1/32 in. on 4-wheel drive vehicles.

5. If toe-in is incorrect, loosen the clamp bolts on each end of the tie rod adjusting sleeve (**Figure 22**) at each wheel.
6. Rotate each adjusting sleeve as required until correct toe alignment is obtained.

7. Reposition the clamps if necessary. They should be located 3/16 in. from the end of the sleeve with the nut end of the bolt facing the front of the vehicle.
8. When the toe is correctly set, tighten the clamp bolts to specifications (**Table 1**).

Steering Axis Inclination

Steering axis inclination is the inward or outward lean of the line through the ball-joints. It is not adjustable.

Steering Lock Angles

When a vehicle turns, the inside wheel makes a smaller circle than the outside wheel. Because of this, the inside wheel turns at a greater angle than the outside wheel. These angles are not adjustable, but are mesured to check for bent suspension and steering parts.

FRONT HUBS

Manual or automatic locking front hubs are used on 4-wheel drive vehicles. When the hub locks are engaged, the hub and wheel/tire assembly is locked to the front driving axle shaft. If the hub locks are disengaged, the hub and wheel/tire assemblv

Locking Hub Removal/Installation

1. Set the parking brake. Securely block both rear wheels so the truck will not roll in either direction. Loosen the front wheel lug nuts.
2. Raise the front of the vehicle with a jack and place it on jackstands.
3. Remove the wheel lug nuts. Remove the wheel/tire assembly.
4. Remove the lug nut stud retainer washers. Remove the hub lock assembly.
5. Installation is the reverse of removal.

WHEEL BEARINGS

The front wheels use adjustable tapered roller bearings which must be cleaned, repacked with grease and adjusted at periodic intervals. A grease retainer at the inner end of the hub prevents lubricant from leaking onto the brake rotor. A snap ring on the end of the spindle holds the entire assembly in place.

The factory-recommended service intervals (Chapter Three) refer to vehicle use age in dry weather on good roads. If the vehicle is used

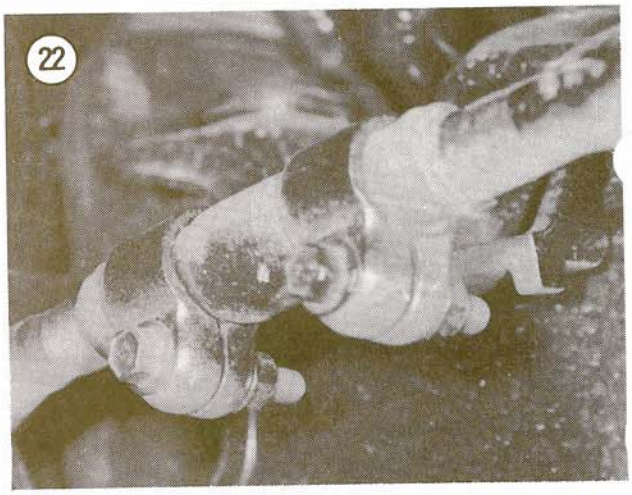

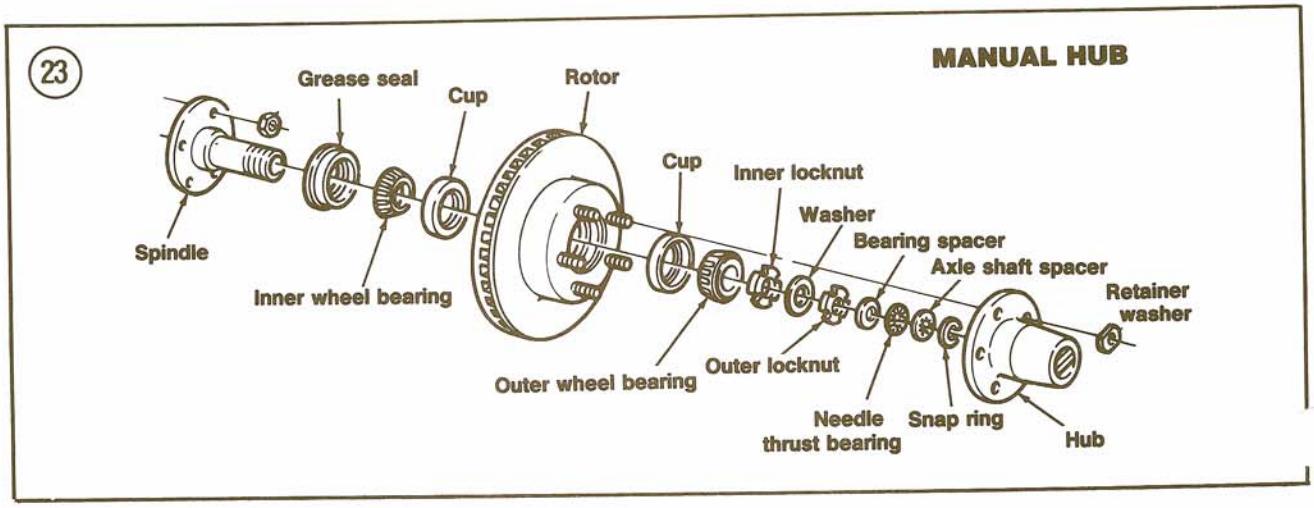

off-road (but not in water), a service interval of 6,000-10,000 miles is more appropriate. For vehicles operated in deep water or mud, the bearings should be serviced daily.

The rear wheel bearings are sealed and receive their lubrication from the oil carried in the rear differential. There is no adjustment required for the rear bearings.

Front Wheel Bearing Adjustment (Manual Locking Hub)

Refer to **Figure 23** for this procedure.

1. Set the parking brake. Securely block both rear wheels so the truck will not roll in either direction. Loosen the front wheel lug nuts.
2. Raise the front of the vehicle with a jack and place it on jackstands.
3. Remove the lug nuts and wheel/tire assemblies.
4. Remove the retainer washers from the lug nut studs. Remove the manual locking hub assembly.

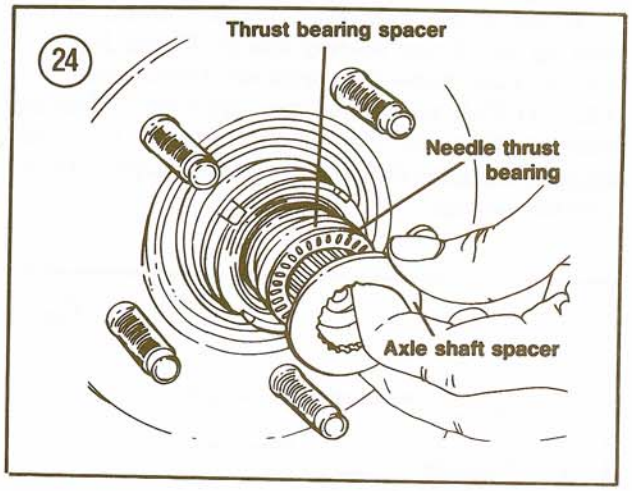

5. Expand and remove the snap ring from the end of the spindle shaft.
6. Remove the axle shaft spacer, needle thrust bearing and thrust bearing spacer (**Figure 24**).
7. Use spanner wrench part No. T83T-1197-A to remove the outer wheel bearing locknut. Remove the locknut washer from the spindle and loosen the inner bearing locknut with the spanner wrench.
8. Tighten the inner locknut with the same wrench to 35 ft.-lb. (47 N•m).
9. Spin the rotor and loosen the inner locknut 1/4 turn. Install the lockwasher on the spindle. If necessary, rotate the inner locknut slightly to align the locknut pin with the nearest hole in the edge of the lockwasher.
10. Install outer locknut with the spanner wrench and tighten to 150 ft.-lb. (203 N•m).
11. Install the thrust bearing spacer, needle thrust bearing and axle shaft spacer (**Figure 24**).
12. Expand and install a new snap ring.
13. Install the manual hub on the spindle.
14. Install the retainer washers, wheel/tire assemblies and lug nuts. Tighten lug nuts finger-tight.
15. Remove the jackstands and lower the vehicle to the ground. Tighten the lug nuts to specifications (**Table 1**).
16. Install a dial indicator to check end play. If it is not 0.001-0.003 in. (0.02-0.08 mm), remove the bearings and cups to check for dirt, damage or excessive wear and correct as required.

Front Wheel Bearing Adjustment (Automatic Locking Hub)

Refer to **Figure 25** for this procedure.

1. Loosen the front wheel lug nuts.

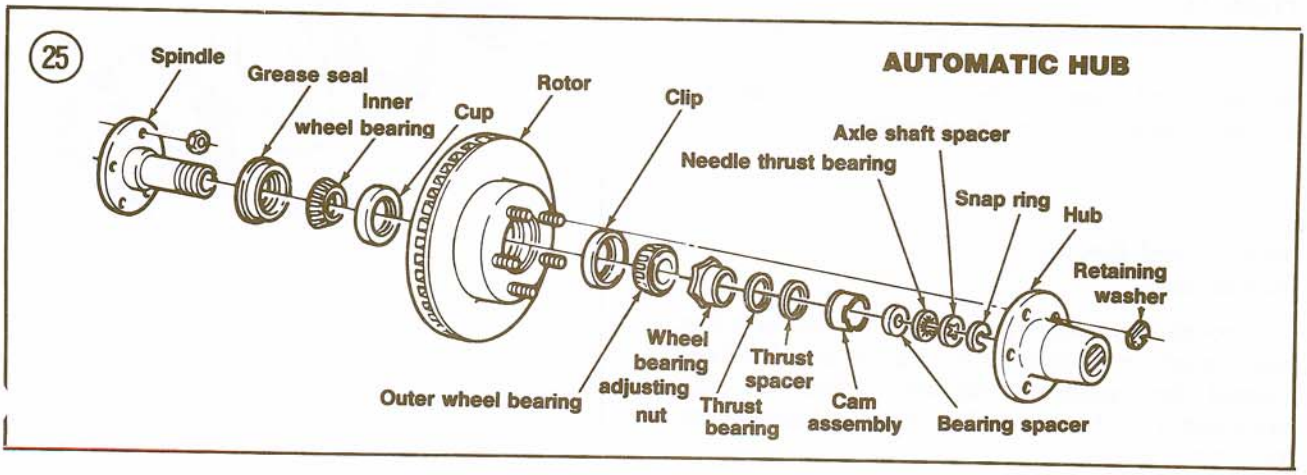

12

2. Raise the front of the vehicle with a jack and place it on jackstands.
3. Remove the lug nuts and wheel/tire assemblies.
4. Remove the retainer washers from the lug nut studs. Remove the automatic locking hub assembly.
5. Expand and remove the snap ring from the end of the spindle shaft.
6. Remove the axle shaft spacer, needle thrust bearing and thrust bearing spacer (**Figure 24**).
7. Carefully pull the cam assembly from the wheel bearing adjusting nut. Remove the thrust washer and needle thrust bearing from the adjusting nut (**Figure 26**).
8. Use hex socket part No. T70T-4252-B to loosen the wheel adjusting nut. Tighten the adjusting nut to 35 ft.-lb. (47 N•m) while rotating the hub and rotor assembly. This will seat the bearings. Loosen nut 1/4 turn.
9. Retighten the adjusting nut to 16 in.-lb. (1.8 N•m). Align nearest hole in nut with center of keyway slot in spindle.
10. Install the needle bearing and thrust washer. Align key in cam assembly with spindle keyway and push cam assembly onto adjusting nut. See **Figure 26**.
11. Install the thrust bearing spacer, needle thrust bearing and axle shaft spacer (**Figure 24**).
12. Expand and install a new snap ring.
13. Align the hub legs with the cam assembly pockets and install the locking hub assembly. See **Figure 27**.
14. Install the retainer washers, wheel/tire assemblies and lug nuts. Tighten lug nuts finger-tight.
15. Remove the jackstands and lower the vehicle to the ground. Tighten the lug nuts to specifications (**Table 1**).
16. Install a dial indicator to check end play. If it is not 0.001-0.003 in. (0.02-0.08 mm), remove the bearings and cups to check for dirt, damage or excessive wear and correct as required.

Front Wheel Bearing Replacement

If rough and noisy operation or looseness is not eliminated by adjustment, the wheel bearings should be removed, cleaned, inspected and repacked with the specified lubricant or replaced as required.

A lithium-base grease such as Ford Multi-purpose Long-life lubricant or equivalent should be used. Do not use other types of grease, as they are not compatible and can result in premature bearing failure.

Refer to **Figure 23** (manual hub) or **Figure 25** (automatic hub) for this procedure.
1. Set the parking brake. Securely block both rear wheels so the truck will not roll in either direction. Loosen the front wheel lug nuts.
2. Raise the front of the vehicle with a jack and place it on jackstands.
3. Remove the lug nuts and wheel/tire assemblies.
4. Remove the retainer washers from the lug nut studs. Remove the locking hub assembly.
5. Unbolt the disc brake caliper from the wheel spindle and suspend it from the frame with wire to prevent stressing the brake line. See Chapter Thirteen.
6. Expand and remove the snap ring from the end of the spindle shaft.
7. Remove the axle shaft spacer, needle thrust bearing and thrust bearing spacer (**Figure 24**).
8A. Manual hub—Use spanner wrench part No. T83T-1197-A to remove the outer wheel bearing locknut. Remove the locknut washer from the spindle. Remove the inner bearing locknut with the spanner wrench.

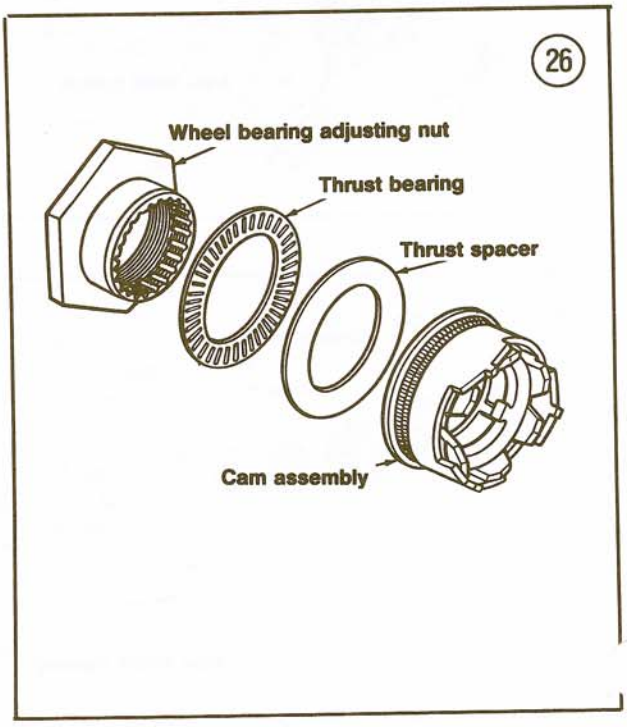

8B. Automatic hub—Carefully pull the cam assembly from the wheel bearing adjusting nut. Remove the thrust washer and needle thrust bearing from the adjusting nut (**Figure 26**). Use hex socket part No. T70T-4252-B to remove the wheel adjusting nut.

9. Pull the rotor forward about one inch, then push it back on the spindle. This will loosen the outer bearing so it can be removed easily. Remove the outer bearing.

10. Remove the rotor from the spindle, together with the inner wheel bearing and grease seal.

11. Pry the old grease seal from the center of the rotor with a suitable screwdriver. Discard the seal and remove the inner wheel bearing.

12. Clean all parts thoroughly in solvent before inspection. Be sure all old grease is removed from the inner and outer bearings.

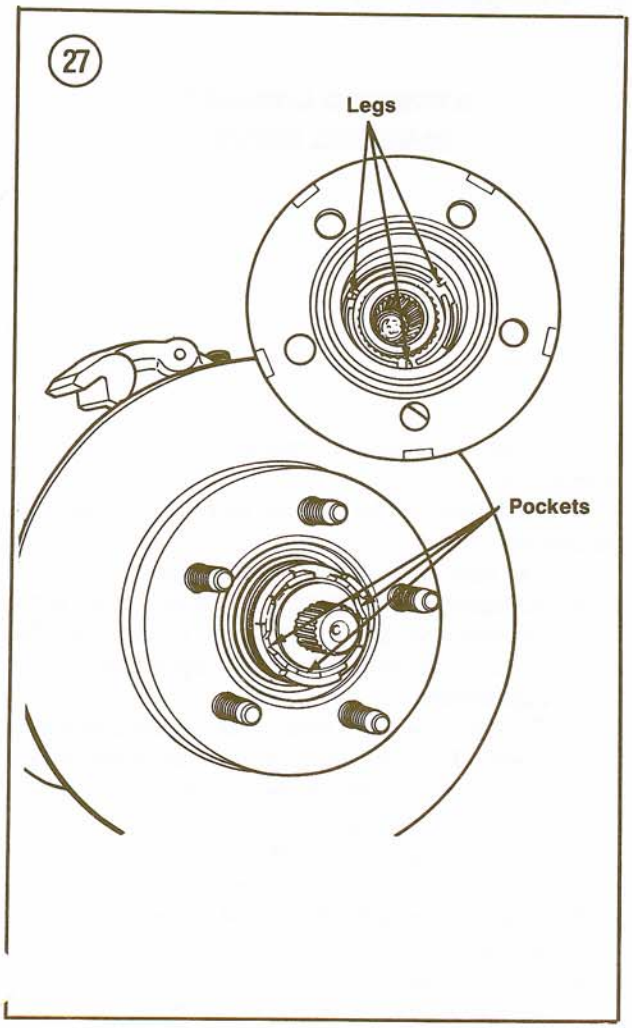

13. Check the bearing cups (outer races) for signs of wear, scoring, chipping, rust or a bluish tint that indicates overheating. If any of these defects are noted, use an appropriate size drift and remove the bearing cups gradually and evenly, tapping around the circumference of the cup.

CAUTION

If a bearing cup is replaced, the corresponding bearing must also be replaced.

14. Inspect the inner and outer bearing assemblies for rust, galling, wear and a bluish tint that indicates overheating. Rotate the bearings and check for roughness or excessive noise. Replace any suspect bearings, together with their corresponding bearing cups.

15. If the bearing cups were removed, drive new ones in place with a drift the same diameter as the cup. Be sure the bearing cup seats evenly in the hub.

16. Pack the hub with wheel bearing grease until the grease is flush with both bearing cups.

17. Pack the bearings with grease using a bearing packer, if possible. If this tool is not available, work as much grease as you can between the rollers by hand. Put grease in one hand and drag the bearing through it several times.

18. Install the inner bearing in the rotor cup.

19. Wipe the grease seal lip with a light coat of grease. Position the seal over the inner bearing and drive it in place with a suitable installer until it is properly seated.

20. Install the rotor on the spindle, keeping the hub centered to prevent damage to the spindle threads or grease seal.

21. Install the outer bearing in the rotor.

22A. Manual hub—Install the inner wheel bearing locknut with spanner wrench part No. T83T-1197-A.

22B. Automatic hub—Install the adjusting nut with hex socket part No. T70T-4252-B.

23. Adjust the wheel bearings as described in this chapter.

24. Reverse Steps 1-5 to complete installation. Tighten the wheel lug nuts to specifications.

STEERING SYSTEM

Vehicles may be equipped with manual (non-power) or integral power steering. The steering system on all models with manual or integral power steering consists of the steering

gearbox, Pitman arm, drag link, connecting rod and tie rods. In addition, models with integral power steering have a pump and connecting fluid lines.

The steering gearbox transfers steering wheel movements to the tie rod ends through the Pitman arm, drag link and connecting rod. The tie rods move the spindles to the desired steering angle.

Steering Linkage

Bent, distorted or otherwise damaged steering linkage should never be straightened and reused. Such components should be replaced with new ones. Any linkage with excessively loose ball-joints should also be replaced.

Figure 28 shows the major steering linkage components.

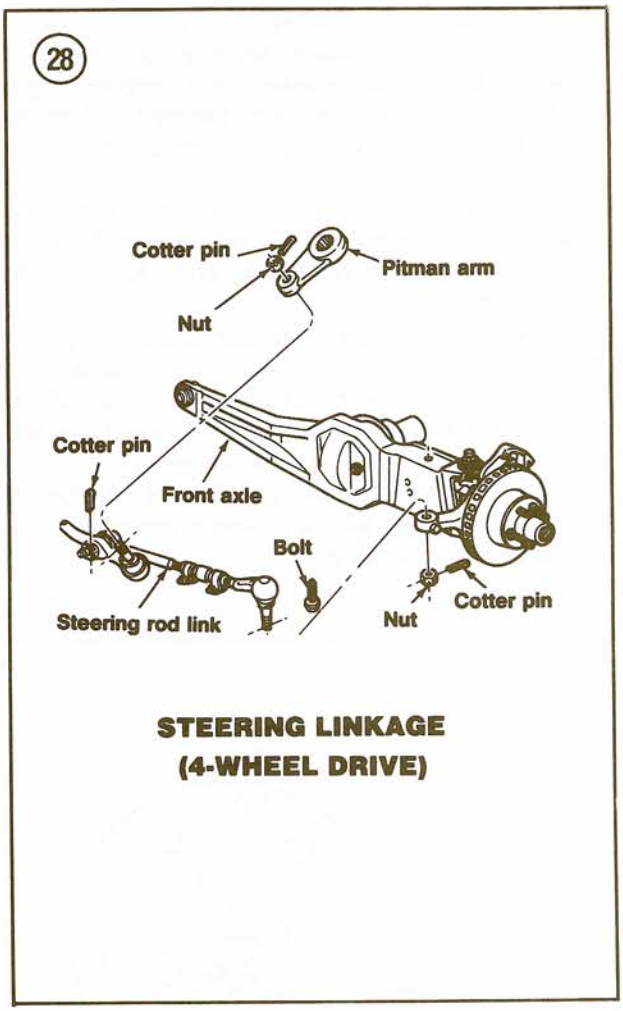

STEERING LINKAGE (4-WHEEL DRIVE)

Tie Rod, Connecting Rod and Drag Link Removal/Installation

Refer to **Figure 28** as required for this procedure.

1. Set the parking brake. Place the transmission in 1st gear (manual) or PARK (automatic).
2. Raise the front of the vehicle with a jack and place it on jackstands.
3. Make sure the steering wheel and front wheels are in the straight-ahead position.
4. Remove and discard the cotter pins from the drag link and tie rod ball studs. Remove the ball stud nuts.
5. Use tie rod end remover part No. 3290-C (**Figure 29**) or a similar puller to separate the ball studs from the linkage.
6. Remove the linkage components from the vehicle.
7. If further service is required, clamp the tie rod or drag link (as required) in a vise with protective jaws. If protective jaws are not available, place the component between soft wooden blocks or wrap it in shop cloths before clamping it in the vise.
8. Loosen the adjusting sleeve clamps and unscrew the defective part. Note and record the number of turns required for removal.
9. If the components are to be reused, clean all threads with a wire brush. Lubricate the threads of all components to be reassembled with clean engine oil.
10. Installation is the reverse of removal, plus the following:
    a. Use new dust seals where appropriate.
    b. Reassemble components with the same number of turns required to disassemble them. This will provide an approximate toe adjustment.
    c. Tighten the ball stud nuts to specifications (**Table 1**). If the nut and ball stud holes do not align, further tighten the nut and install a new cotter pin through the nut and stud holes.
    d. Lubricate all grease fittings.
    e. Check and adjust tire pressures as required.
    f. Remove the jackstands and lower the vehicle to the ground.
    g. Have a dealer or wheel alignment shop chec and adjust toe to specifications.

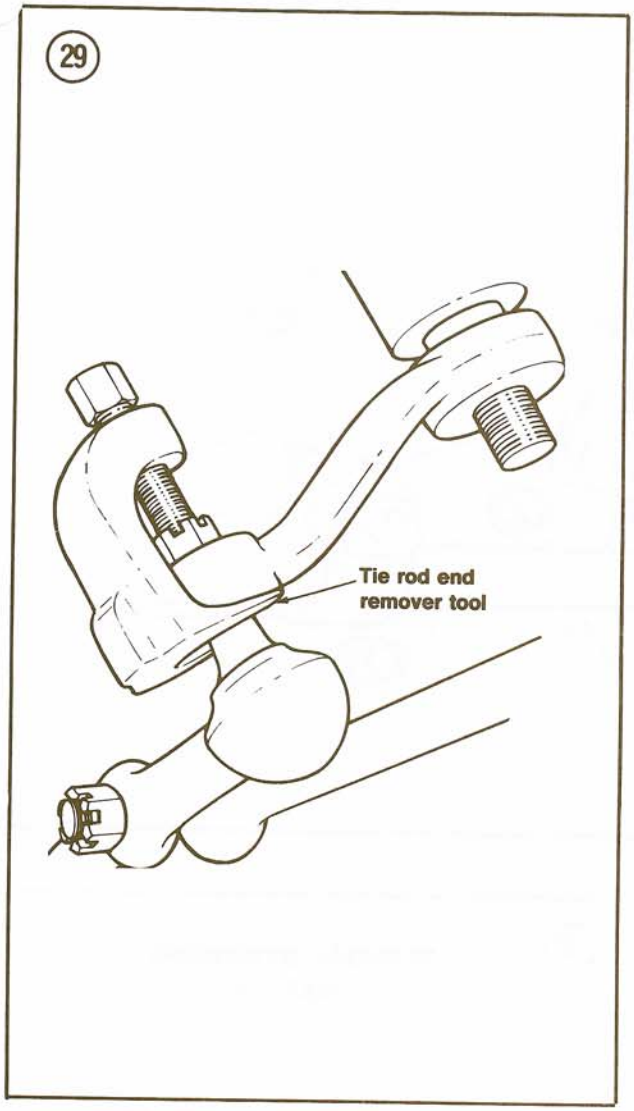

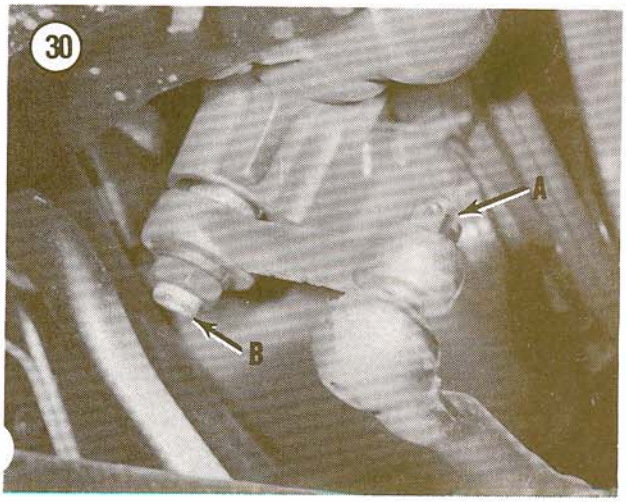

Pitman Arm
Removal/Installation

1. Set the parking brake. Securely block both rear wheels so the truck will not roll in either direction. Raise the front of the vehicle with a jack and place it on jackstands.
2. Make sure the steering wheel and front wheels are in the straight-ahead position.
3. Remove and discard the cotter pins from the drag link ball stud at the Pitman arm (A, **Figure 30**).
4. Remove the drag link ball stud with tie rod end remover part No. 3290-C (**Figure 29**) or a similar puller.
5. Remove the Pitman arm nut and washer (B, **Figure 30**).
6. Scribe alignment marks on the Pitman arm and steering gearbox shaft for reassembly reference.

CAUTION

Do not hammer on the puller in Step 7 to separate the Pitman arm from the steering gearbox shaft. This can cause internal damage to the steering gearbox.

7. Separate the Pitman arm from the steering gearbox shaft with puller part No. T64P-3590-F (**Figure 31**) or equivalent.
8. Installation is the reverse of removal, plus the following:
   a. Make sure the vehicle steering wheel and the front wheels are in the straight-ahead position.
   b. Make sure the ball stud seats in the linkage taper properly.
   c. Tighten the Pitman arm nut and ball stud nut to specifications (**Table 1**). If the nut and ball stud holes do not align, further tighten the nut and install a new cotter pin through the nut and stud holes.
   d. Check and adjust tire pressures as required.
   e. Remove the jackstands and lower the vehicle to the ground.
   f. Have a dealer or wheel alignment shop check and adjust toe to specifications.

Manual Steering Gearbox
Removal/Installation

Refer to **Figure 32** for this procedure.
1. Disconnect the flexible coupling from the steering gear input shaft. Slide the coupling up the intermediate shaft.

(31)

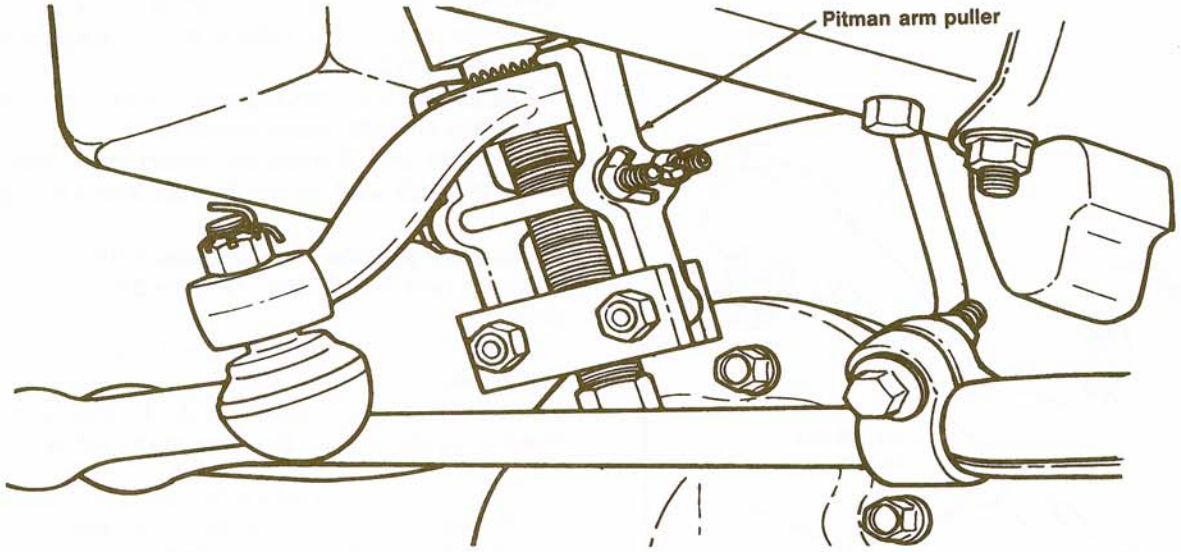

2. Remove the bolt holding the flexible coupling to the steering gear. Remove the steering gear input shaft shield.
3. Separate the Pitman arm from the steering gear shaft as described in this chapter.
4. Support the steering gearbox. Remove the attaching bolts. Remove the gearbox.
5. Installation is the reverse of removal. Count the turns required to rotate the gearbox input shaft from stop to stop. Rotate the shaft back halfway to center the gear. Tighten all fasteners to specifications (**Table 1**).

Power Steering Gearbox Removal/Installation

Refer to **Figure 33** for this procedure.
1. Disconnect and plug the pressure and return lines at the steering gearbox quick-disconnect fittings. Use a tube nut wrench to avoid possible nut deformation. Cap the ports in the gearbox.
2. Remove the upper and lower steering shaft U-joint shield from the flexible coupling.
3. Remove the flexible coupling bolt and disconnect the coupling at the steering gear.

(32)

MANUAL STEERING GEARBOX

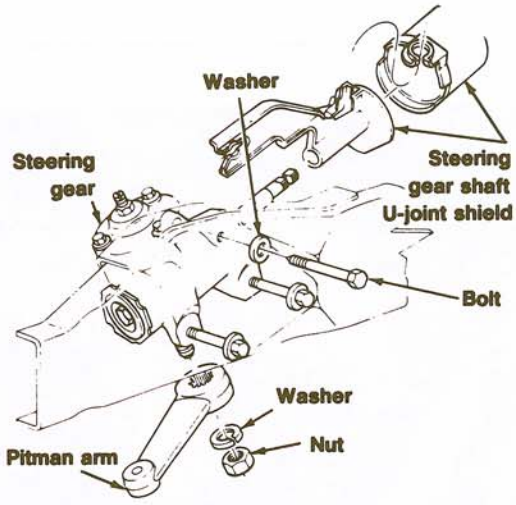

(33)

POWER STEERING GEARBOX

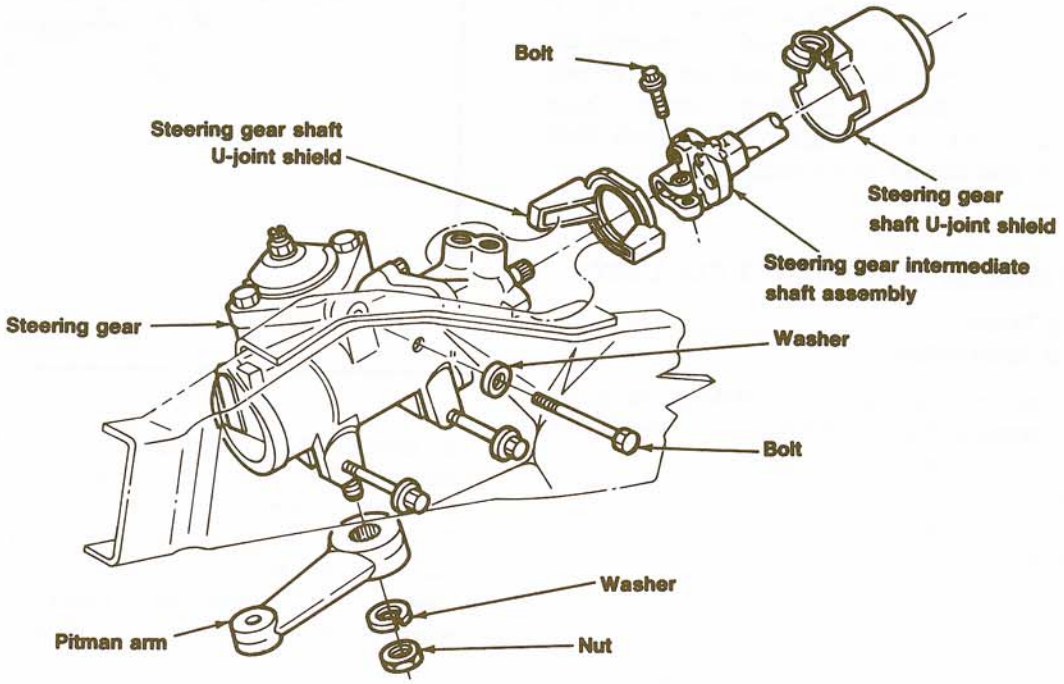

4. Raise the vehicle with a jack and place it on jackstands.
5. Separate the Pitman arm from the steering gear shaft as described in this chapter.
6. Support the steering gearbox. Remove the attaching bolts.
7. Work the gearbox free from the flexible coupling. Remove the gearbox.
8. Installation is the reverse of removal, plus the following:
   a. Count the turns required to rotate the gearbox input shaft from stop to stop. Rotate the shaft back halfway to center the gear.
   b. Tighten all fasteners to specifications (**Table 1**).
   c. Disconnect the coil wire, crank the engine and fill the power steering pump with Type F automatic transmission fluid. Reconnect the coil wire, start the engine and run for several minutes. Rotate steering wheel from lock-to-lock. Turn engine off, recheck fluid level and top up, if necessary.

STEERING WHEEL AND COLUMN

Steering Wheel
Removal/Installation

1. Disconnect the negative battery cable on gasoline models. Disconnect both negative battery cables on diesel models.
2. Remove the screws holding the steering wheel horn pad to the spokes. Lift the horn pad straight up, disconnect the horn and/or speed control wires and remove the horn pad.

NOTE

The speed control ground wire terminal is retained by a spring. Be sure to squeeze the terminal in Step 3 to prevent damage to the spring and terminal.

3. 1983-1984 with speed control—Squeeze the J-clip ground wire terminal and pull it from the steering wheel hole.
4. Remove the horn switch assembly.
5. Remove the steering wheel attaching nut.

WARNING

Do not use a knock-off puller for Step 6 or strike the end of the steering column upper shaft with a hammer. This can damage the steering shaft bearing.

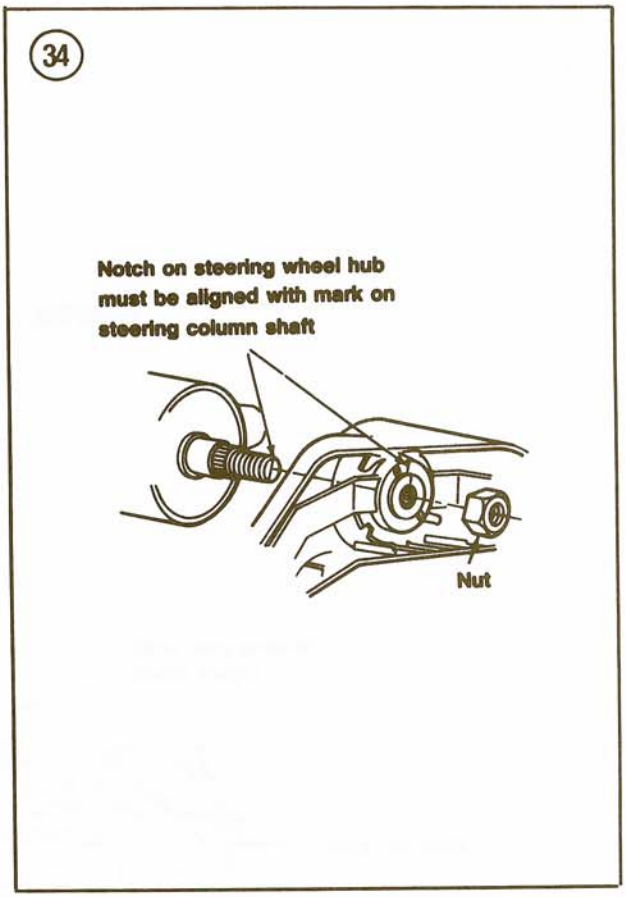

6. Install wheel puller part No. T67L-3600-A or equivalent and remove the steering wheel from the steering column upper shaft.
7. Installation is the reverse of removal. Align the notch on the steering wheel with the mark on the steering column as shown in **Figure 34**. Tighten the wheel nut to 30-42 ft.-lb. (41-56 N•m).

Steering Column
Removal/Installation
(Standard or Tilt Wheel)

CAUTION

The steering column is very susceptible to damage during and after removal from the vehicle. Hammering, dropping or leaning the column can damage it. Clamping in the corrugated section of the column can deform the tube wall and affect its energy absorption properties.

Refer to **Figure 35** for this procedure.

(35)

STEERING WHEEL AND COLUMN

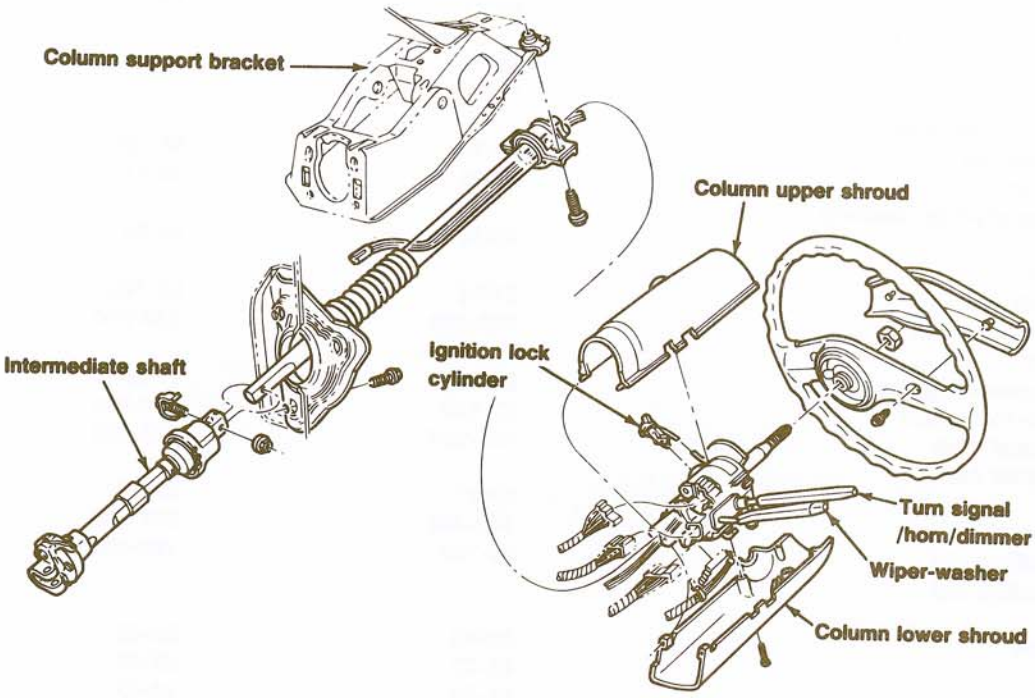

1. Disconnect the negative battery cable on gasoline models. Disconnect both negative battery cables on diesel models.
2. Remove the steering shaft-to-intermediate shaft bolt. Disengage the column connecting joint.
3. Remove the steering wheel as described in this chapter.
4. Remove the column shroud attaching screws. Remove the shrouds.
5. Tilt column—Squeeze the upper extension shroud at the top and bottom to free it from the retaining plate.
6. Remove the steering column cover directly under the column.
7. Disconnect all electrical quick-connectors at the steering column switches.
8. Loosen but do not remove the 2 bolts holding the column to the support bracket.
9. Remove the 3 screws holding the toeplate and lower seal to the firewall.
10. Remove the 2 column-to-support bracket bolts. Lower the column and remove it from the vehicle.
11. Installation is the reverse of removal.

Table 1 TIGHTENING TORQUES

Fastener	ft.-lb.	N·m
Axle arm		
Bracket-to-frame nut	70-92	95-125
To bracket nut	120-150	163-203
Ball-joint stud nut		
Lower	85-100	115-136
Upper	95-110	129-149
Bumper-to-spring seat bolt		
1983-1984	13-18	18-25
1985-on	11-19	15-25
Drag link-to-connecting		
rod ball stud nut	51-75	68-102
Flex coupling	25-35	34-47
Intermediate shaft-to-steering		
shaft nut	40-50	54-68
Pitman arm		
To drag link nut	51-75	68-102
To steering gear nut	170-230	230-310
Radius arm		
Bracket connecting bolt	35-50	47-68
Bracket-to-frame bolt	77-110	104-152
Front bracket stud	160-220	217-298
Front bracket bolt		
Front	27-37	37-50
Lower	160-220	217-298
Rear attaching nut	80-120	109-163
Shock absorber nut		
Upper		
1983-1985	48-68	66-92
1986	42-72	57-97
Lower	25-35	34-67
Shock absorber bracket nut	42-72	57-97
Stabilizer bar		
Retainer bolts	77-110	104-150
U-bolt nuts	48-68	66-92
Link assembly nuts	30-44	40-60
Steering column		
Cover plate bolt	9-12	12-17
To bracket bolt	15-22	20-30
Steering gearbox-to-frame		
Manual	54-66	73-88
Power	50-62	68-84
Steering wheel nut	30-42	40-57
Tie rod		
Adjusting clamp nuts	30-42	40-57
To spindle nut	51-75	68-102
Wheel lug nuts	85-115	115-155

CHAPTER THIRTEEN

BRAKES

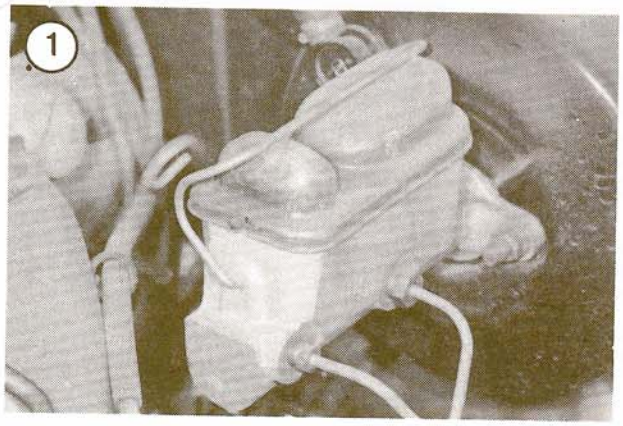

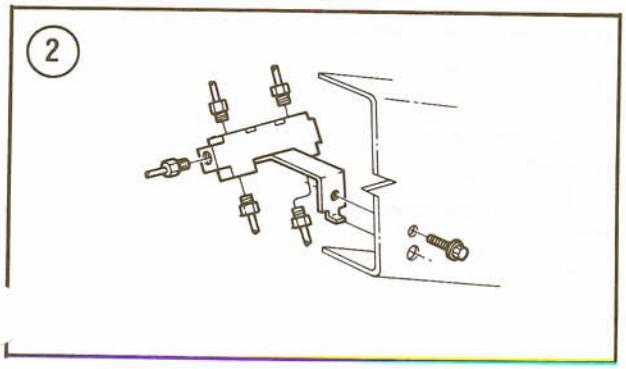

All vehicles use a dual hydraulic self-adjusting brake system with disc brakes at the front and drum brakes at the rear. A dual reservoir master cylinder (**Figure 1**) is used, with the small front reservoir connected to the rear drum brakes. The larger rear reservoir is connected to the front disc brakes.

The pressure differential control valve (**Figure 2**) mounted on the frame side rail under the vehicle contains a brake warning switch. When the pressure differential portion of the valve senses a drop in pressure in either of the 2 independent brake systems, it turns the instrument panel brake warning light on. The light shuts off when the system is serviced, bled and the brake pedal depressed to center the piston.

An optional power brake booster utilizes engine intake manifold vacuum (gasoline engine) or vacuum from a belt-driven pump (diesel engine) and atmospheric pressure for its power.

A foot-actuated parking brake control assembly is mounted on the left-hand cowl in the cab and connects to the rear brakes through a cable routed along the left-hand frame rail.

Figure 3 shows the non-power brake system; **Figure 4** shows the power brake system. Tightening torques are provided in **Table 1** at the end of the chapter.

REAR ANTI-LOCK BRAKE SYSTEM (RABS)

Electronic control has been added to the rear brake system on all 1987 vehicles covered in this manual. The RABS system prevents light-load lockup on wet or slippery surfaces by constantly monitoring rear wheel speed and regulating hydraulic pressure to the rear brake system.

The system consists of a magnetic speed sensor mounted in the rear axle, a dual mode (hold/dump) valve to the rear brakes and a microprocessor (module). An amber instrument panel warning lamp alerts the driver to an abnormal condition or system failure.

The microprocessor receives signals from the magnetic sensor. Pedal application is interpreted by the module as a drop in vehicle speed. If the deceleration rate indicates that lockup will occur, the microprocessor activates a dual solenoid control valve which closes an internal isolation valve. This shuts off fluid pressure to the rear wheel cylinders. If the axle sensor continues to indicate wheel lockup, the control module then energizes a dump valve solenoid which bleeds off wheel cylinder pressure into a spring-loaded accumulator piston. When the lockup condition no longer exists, the module de-energizes the solenoids and normal braking operation is resumed.

Diagnosis of and corrective action on this system should be performed by a Ford dealer, since its failure to operate properly constitutes an extreme safety hazard. Components are non-serviceable and must be replaced if defective.

FRONT DISC BRAKES

The front disc brake assembly uses a single-piston pin slider caliper. The caliper operates on a rotor and hub assembly retained on the spindle by the wheel bearing nut lock retainer. **Figure 5** (2-wheel drive) and **Figure 6** (4-wheel drive) show the major components of the disc brake assembly.

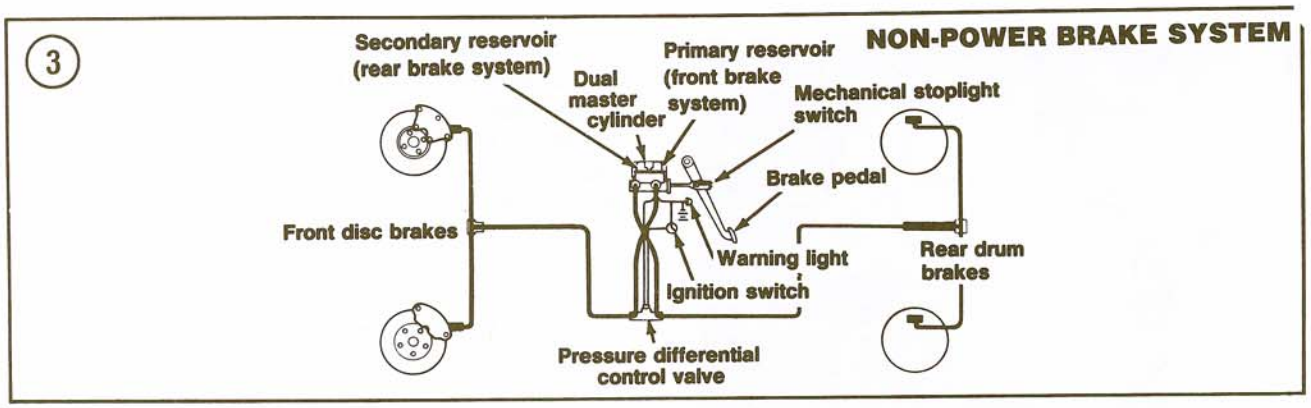

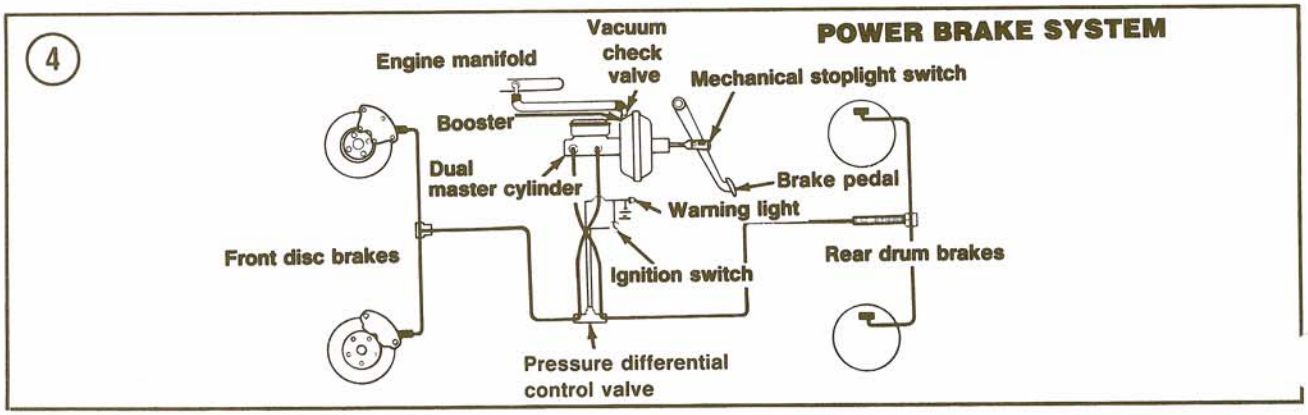

5

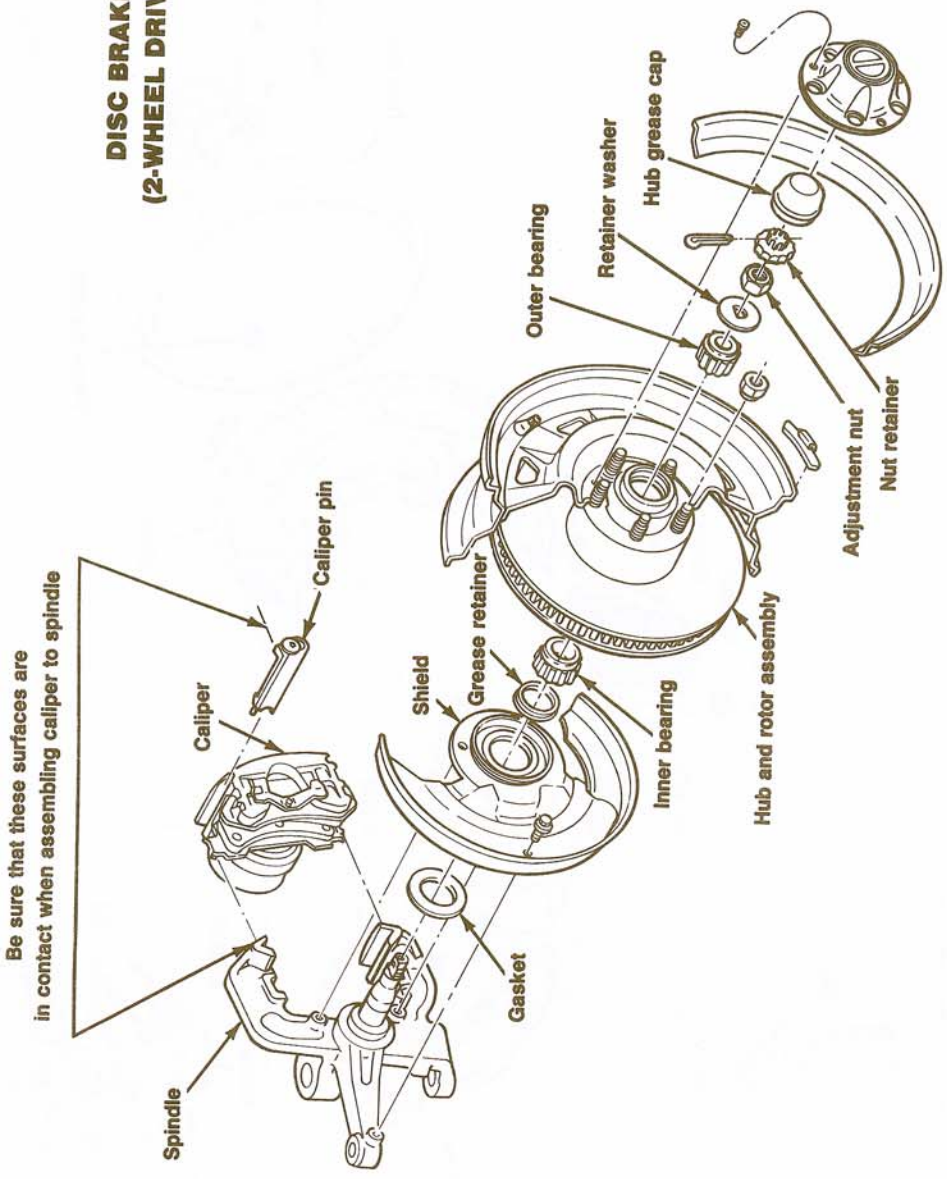
DISC BRAKES
(2-WHEEL DRIVE)
Be sure that these surfaces are
in contact when assembling caliper to spindle
Caliper pin
Caliper
Shield
Grease retainer
Inner bearing
Hub and rotor assembly
Outer bearing
Retainer washer
Hub grease cap
Adjustment nut
Nut retainer
Gasket
Spindle

13

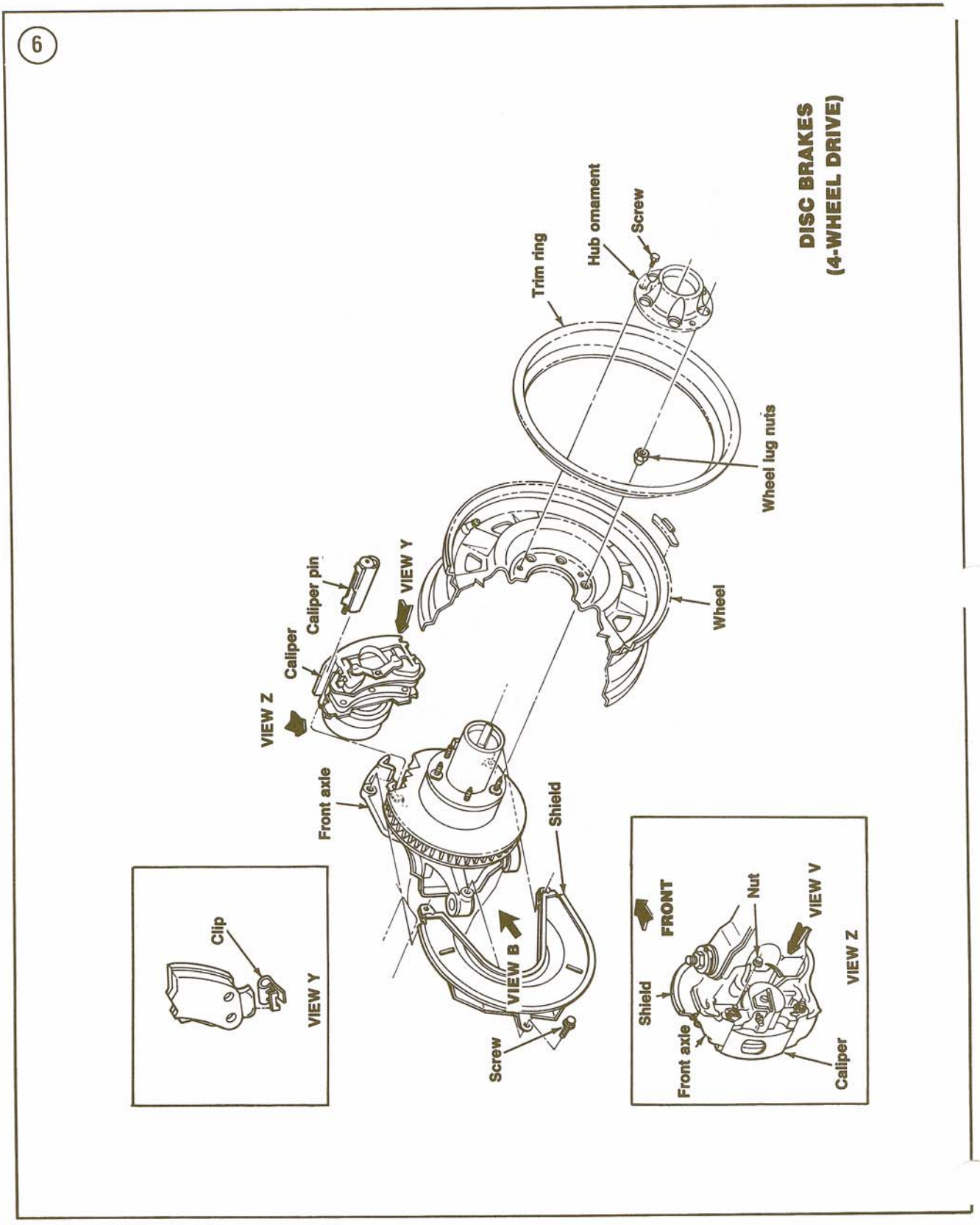
6
DISC BRAKES
(4-WHEEL DRIVE)
Trim ring
Hub ornament
Screw
Wheel lug nuts
Wheel
VIEW Y
Caliper pin
Caliper
VIEW Z
Front axle
Shield
VIEW B
Screw
Clip
VIEW Y
FRONT
Nut
VIEW V
Shield
Front axle
Caliper
VIEW Z

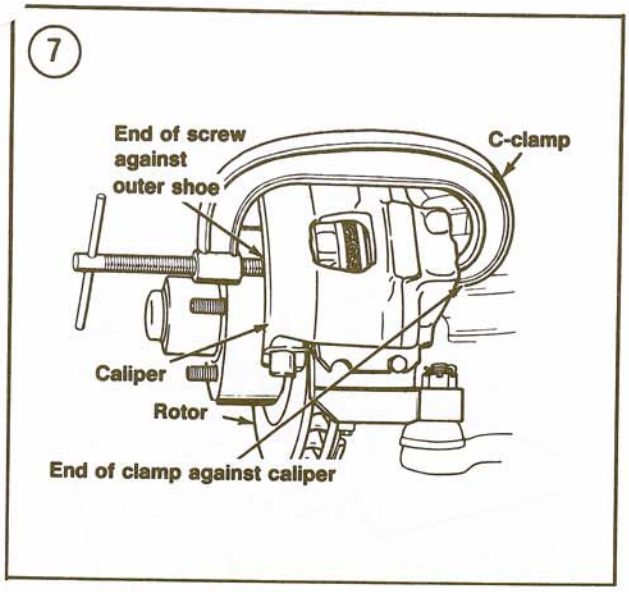

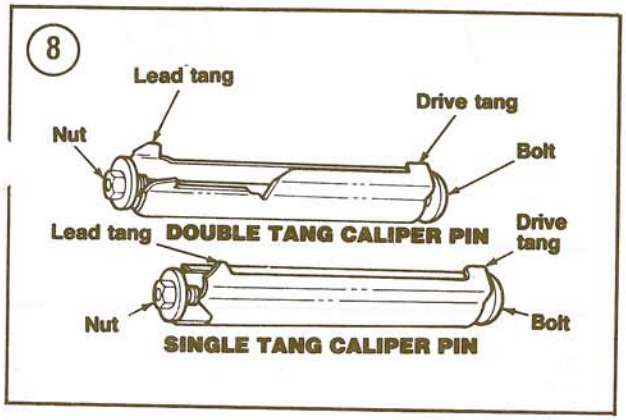

Before replacing disc brake pads, remove the master cylinder cover and use a large syringe to siphon and discard about 50 percent of the fluid from the rear reservoir. This will prevent the master cylinder from overflowing when the caliper piston is compressed for reinstallation. *Do not drain the entire reservoir* or air will enter the system. Recheck the reservoir when the pads have been reinstalled and top up as required with fresh DOT 3 brake fluid. If no hydraulic line is opened, it should not be necessary to bleed the brake system after pad replacement.

NOTE

If pads are to be reused, mark them so they can be reinstalled in the same position. Reused pads must always be installed in the same position from which they were removed.

Disc Pad Inspection (On-vehicle)

1. Set the parking brake. Place the transmission in 1st gear (manual) or PARK (automatic).
2. Loosen the front wheel lug nuts.
3. Raise the front of the vehicle with a jack and place it on jackstands.
4. Remove the wheel covers or hub ornaments, if so equipped. Remove the wheel/tire assemblies.
5. Look through the inspection hole in the caliper and check the lining wear at each end of the pad. Check lining thickness visually.
6. If any lining appears to be worn to within 1/32 in. of the metal pad at any point, replace all disc pads.
7. Install the wheel/tire assemblies and wheel covers or hub ornaments, if so equipped. Lower the vehicle to the ground.
8. Tighten wheel lug nuts to specifications (**Table 1**).

Disc Pad Replacement

1. Set the parking brake. Place the transmission in 1st gear (manual) or PARK (automatic).
2. Remove the wheel covers or hub ornaments, if so equipped, and loosen the wheel lug nuts.
3. Raise the front of the vehicle with a jack and place it on jackstands. Remove the front wheel/tire assemblies.

CAUTION

Do not use a screwdriver or similar tool to move the piston away from the brake rotor in Step 4. This can damage the piston and/or rotor surface.

4. Install an 8-inch C-clamp on the caliper (**Figure 7**), then tighten the clamp to bottom the caliper piston in its bore. Remove the clamp.

NOTE

*Three types of caliper pins have been used. **Figure 8** shows the double and single tang designs. Late models will use a slightly different type without the bolt in the center. See **Figure 9**. Pin removal varies according to the type used. Pins **must always** be discarded whenever the caliper is removed; new pins **must** be used when the caliper is reinstalled. Remove the upper pin first.*

5A. If caliper pin bolt head faces out:

a. Tap the upper caliper bolt from the inner side of the caliper until the head protrudes from the pin (**Figure 10**).
b. Cut the bolt head off with a hacksaw or bolt cutter.
c. Use a screwdriver to depress the tab on the bolt head end of the upper caliper pin while tapping on the pin with a hammer. See **Figure 11**.
d. Continue tapping until the tab is depressed by the V-slot.
e. Use a 1/2 in. or smaller punch to drive the pin toward the inside of the vehicle and out of the caliper. Do not use a screwdriver to accomplish this, as it can damage the V-grooves in the caliper.
f. Repeat this step to remove the lower caliper pin.

5B. If caliper pin nut end faces out:

a. Remove the nut from the bolt (**Figure 12**).
b. Use a screwdriver to depress the lead tang on the end of the caliper pin while tapping the pin with a hammer.
c. Continue tapping until the lead tang is depressed by the V-slot.
d. Use a 1/2 in. or smaller punch to drive the pin toward the inside of the vehicle and out of

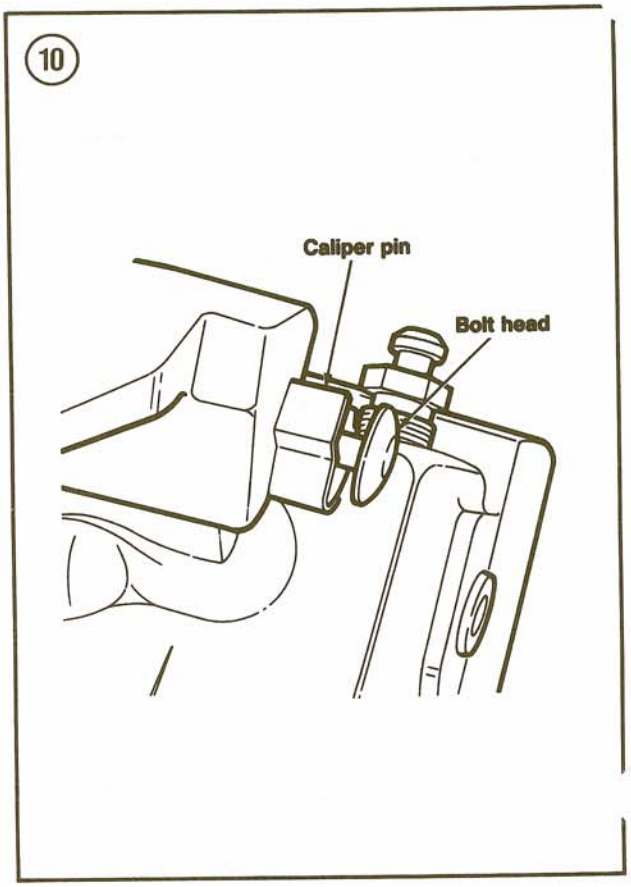

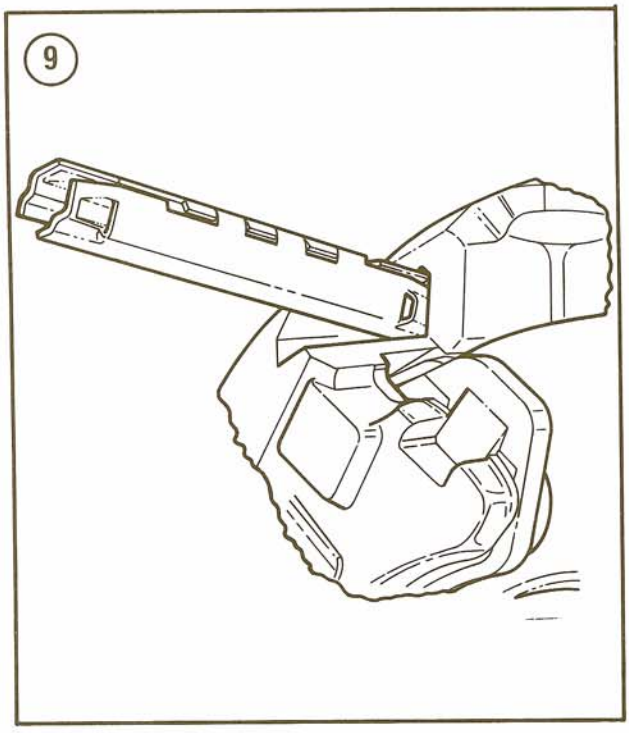

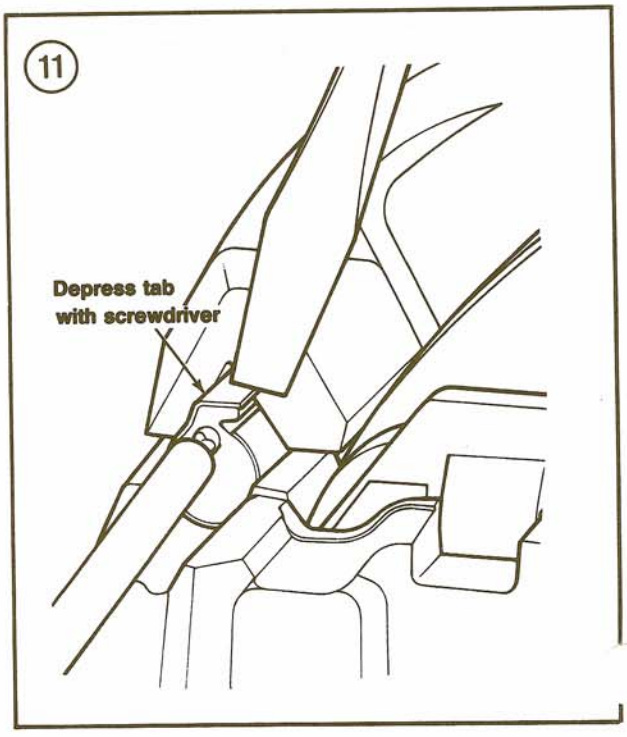

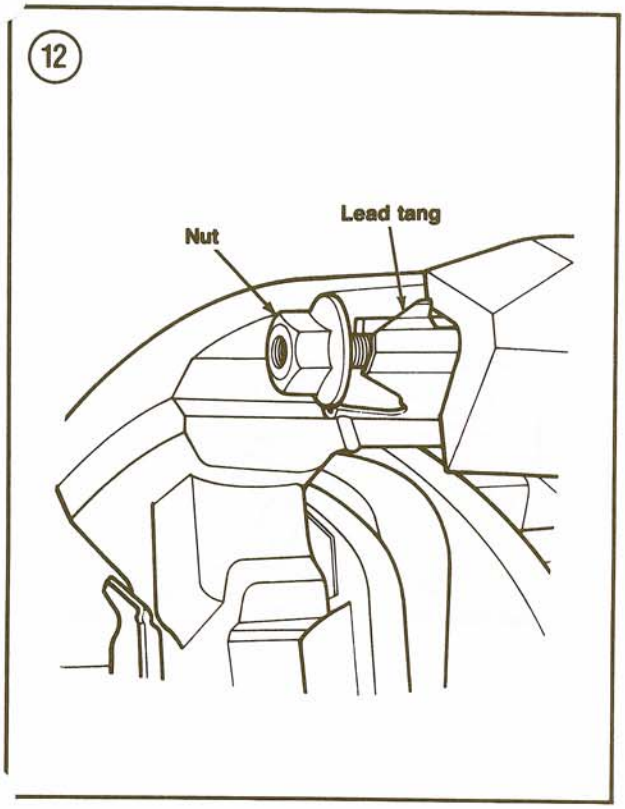

the caliper. Do not use a screwdriver to accomplish this, as it can damage the V-grooves in the caliper.

e. Repeat this step to remove the lower caliper pin.

5C. If caliper pin has no bolt:

a. Tap upper caliper pin inward until pin tabs contact the face of the spindle.

b. Position a screwdriver in the slot behind the pin tabs on the inner side of the pin (**Figure 13**).

c. Compress the outer end of the pin with needlenose pliers while prying with the screwdriver until the tabs slip into the spindle groove (**Figure 13**).

d. Use a 7/16 in. or smaller punch to drive the pin toward the inside of the vehicle and out of the caliper. Do not use a screwdriver to accomplish this, as it can damage the V-grooves in the caliper.

e. Repeat this step to remove the lower caliper pin.

6. Remove the caliper from the rotor.

7. Remove the outer pad from the caliper. Remove the anti-rattle clips and then remove the inner pad.

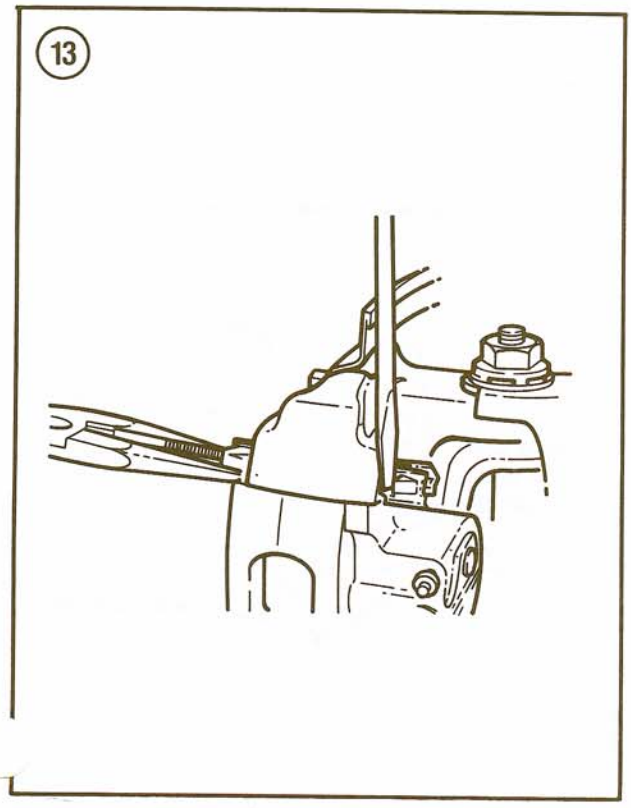

CAUTION

Do not get lubricant on brake rotors or pad linings in Step 8. Wipe off excess lubricant after assembly.

8. Clean the caliper and spindle areas that come in contact during the sliding action of the caliper. Remove rust and corrosion from the machined surfaces with a wire brush, then lubricate them with Ford Disc Caliper Slide Grease (part No. D7AZ-19590-A) or equivalent.

9. Inspect the pads as described in *Pad Inspection, Off-vehicle* in this chapter.

10. Carefully clean the outside of the caliper. Check the caliper piston seal and boot area for brake fluid leaks. If brake fluid has leaked from the caliper housing, replace the caliper. If the leak appears to come from the seal area, rebuild the caliper as described under *Caliper Overhaul* in this chapter.

11. Inspect the flexible brake hose attached to the caliper. Replace the brake hose if it is swollen, cracked or leaking.

12. Inspect the brake rotor as described in this chapter.

13. Install a new anti-rattle clip on the lower end of the inner pad (**Figure 14**). Make sure that the clip tabs are correctly positioned and that the clip is fully seated.
14. Fit the inner pad and anti-rattle clip in the caliper pad abutment with the clip tab facing the abutment and the loop-type spring facing away from the brake rotor (**Figure 15**). Compress the anti-rattle clip and slide the upper end of the pad into place.
15. Make sure that the caliper piston is bottomed in its bore. If necessary, use a large C-clamp.

WARNING

The torque buttons on the outer pad must seat solidly in the caliper holes to prevent a possible temporary loss of braking power.

16. Install the outer pad with the torque buttons on the pad spring clip fully seated in the caliper holes (**Figure 16**).
17. Fit the caliper on the spindle assembly. Lubricate the caliper grooves with Ford Disc Caliper Slide Grease (part No. D7AZ-19590-A) or equivalent.

NOTE

Replacement caliper pins come with bolts and nuts. If the pin removed from the caliper did not use a bolt, do not use the bolt and nut included with the replacement pins in Step 18.

18A. Caliper pin with bolt:
a. Install a new upper caliper pin with the lead tang as shown in **Figure 17**.

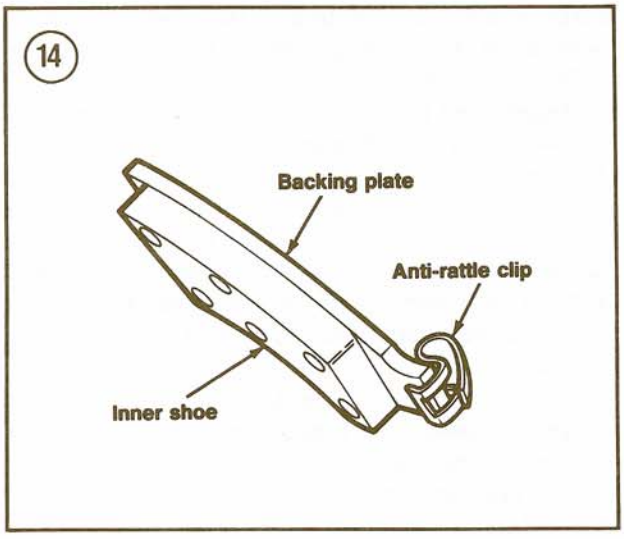

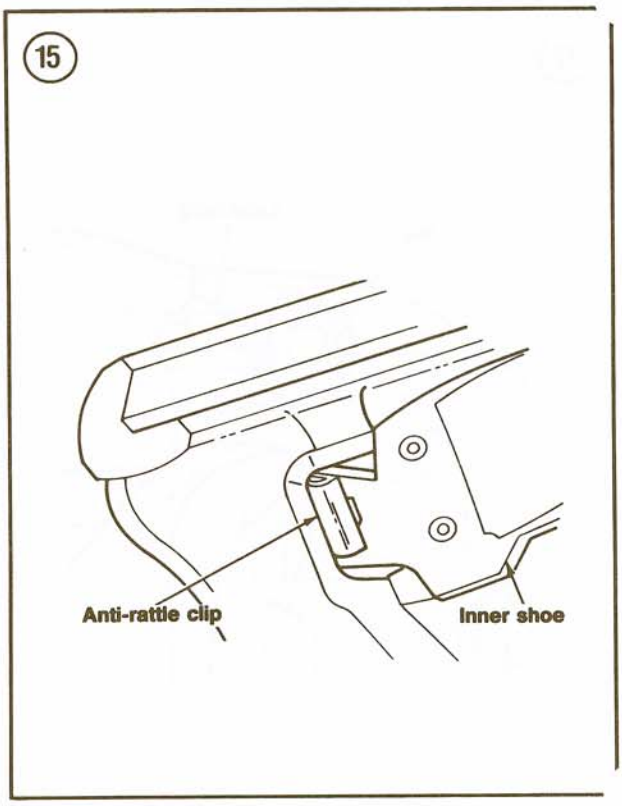

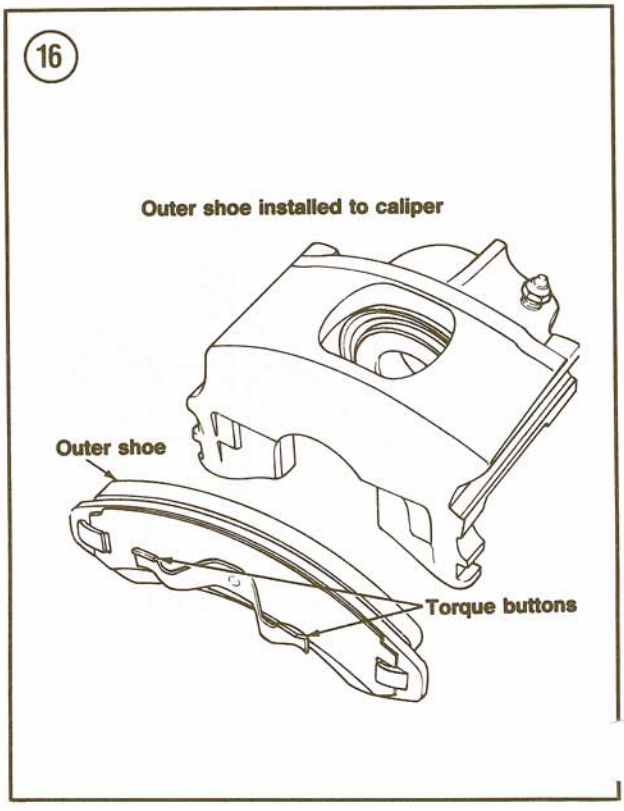

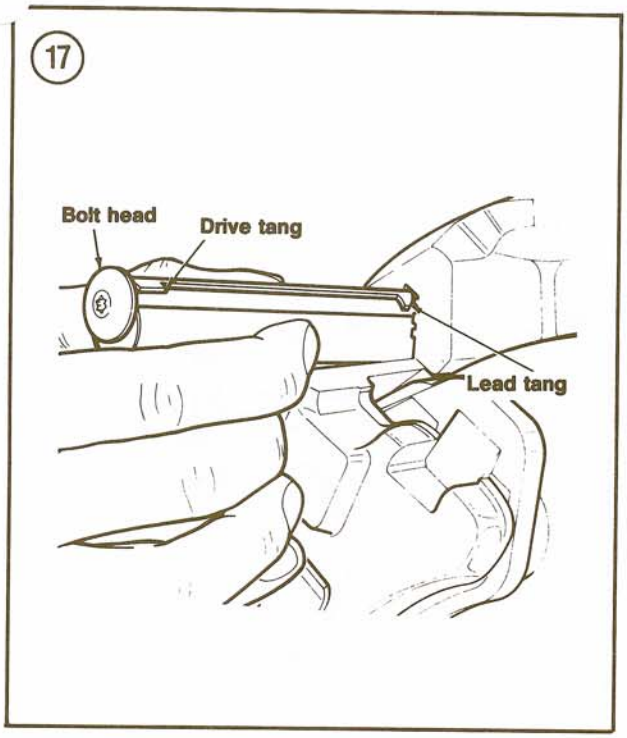

b. Drive the upper pin into the caliper until the lead tang is flush with the caliper assembly (**Figure 18**).
c. Install the pin nut and tighten to 32-47 in.-lb. (3.6-5.3 N•m).
d. Repeat this step to install the lower caliper pin. **Figure 19** shows correct pin installation.

18B. Caliper pin without bolt:
a. Install a new upper caliper pin with the retention tabs oriented next to the spindle groove (**Figure 20**).
b. Drive the pin into the caliper until the retention tabs touch the face of the spindle. Make sure the tabs on each end of the pin catch the spindle flanks. See **Figure 21**.
c. Repeat this step to install the lower caliper pin. **Figure 22** shows correct pin installation.

19. If the caliper brake hose was disconnected for any reason, bleed the brakes as described in this chapter.

20. Install the wheel/tire assemblies and finger-tighten the lug nuts. Lower the vehicle to the ground and tighten the lug nuts to specifications

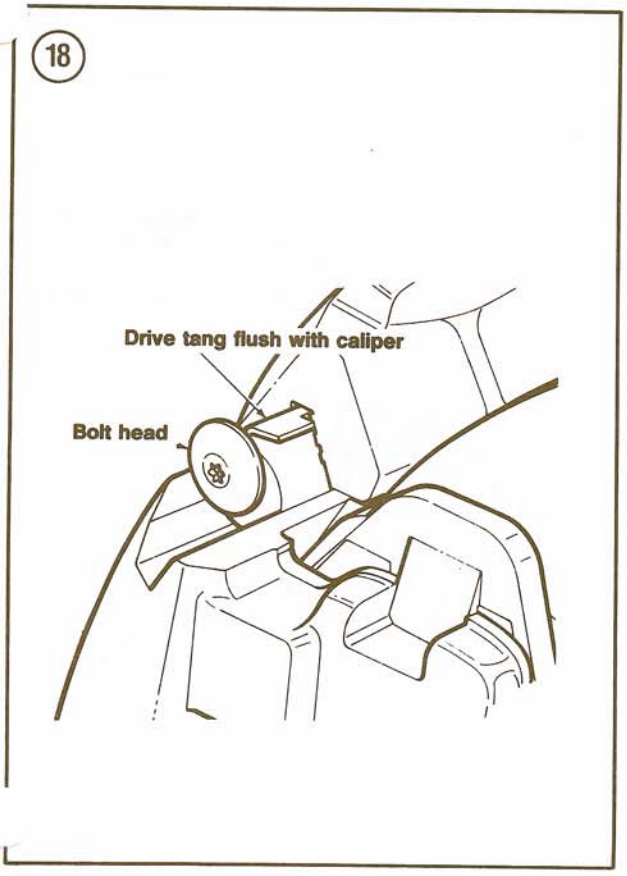

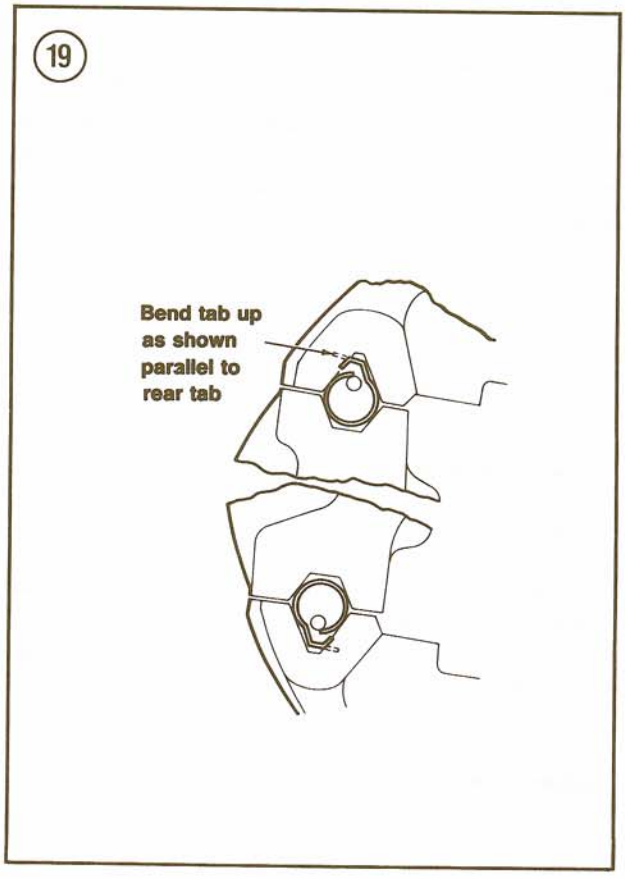

(**Table 1**) in an alternating pattern. Reinstall the wheel covers or hub ornaments, if so equipped.

WARNING

Do not use brake fluid from a previously opened container in Step 21. Brake fluid absorbs moisture from the air and moisture in the hydraulic lines can result in erratic or slow braking.

21. Check the master cylinder fluid level and top up as needed with fresh DOT 3 fluid. Install the reservoir cover and check for leaks around the caliper and hoses.
22. Check for firm pedal pressure. Road test the vehicle to make sure the brakes operate properly.

Pad Inspection (Off-vehicle)

1. Inspect the lining surfaces for wear. If the lining on either pad is worn to within 1/32 in. of the pad (bonded) or any rivet head (riveted), replace all pads. See **Figure 23**.
2. Check pads for damage caused by overheating. If the lining sufaces have been overheated (indicated by blue-tinted areas on the pad), replace the pads.
3. Check pads for contamination. Light surface dirt, oil or grease stains may be sanded off. If oil or grease has penetrated the surface, replace the pads. Since brake fluid will ruin the friction material, pads must be replaced if any brake fluid has touched them.

WARNING

If pads are replaced on one wheel, they must also be replaced on the other wheel to maintain equal brake action and avoid excessive brake pull under normal driving conditions.

Caliper Removal

1. Perform Steps 1-6 of *Pad Replacement* in this chapter.
2. Disconnect the brake hose from the caliper and discard the copper washers. Plug the caliper inlet port and hose outlet to prevent dirt from entering.
3. Mark the left and right calipers for identification if both are removed.

Caliper Overhaul

The piston components must be removed from the caliper and replaced if the caliper assembly

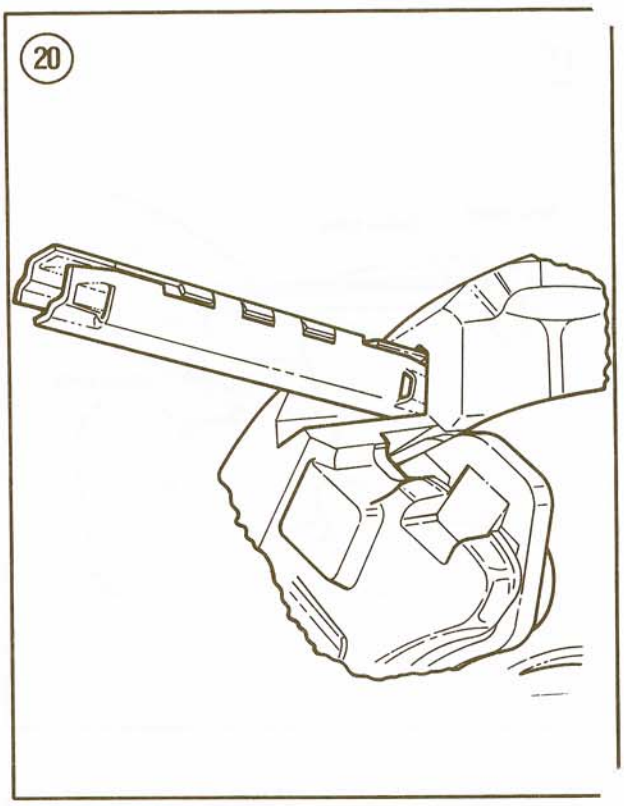

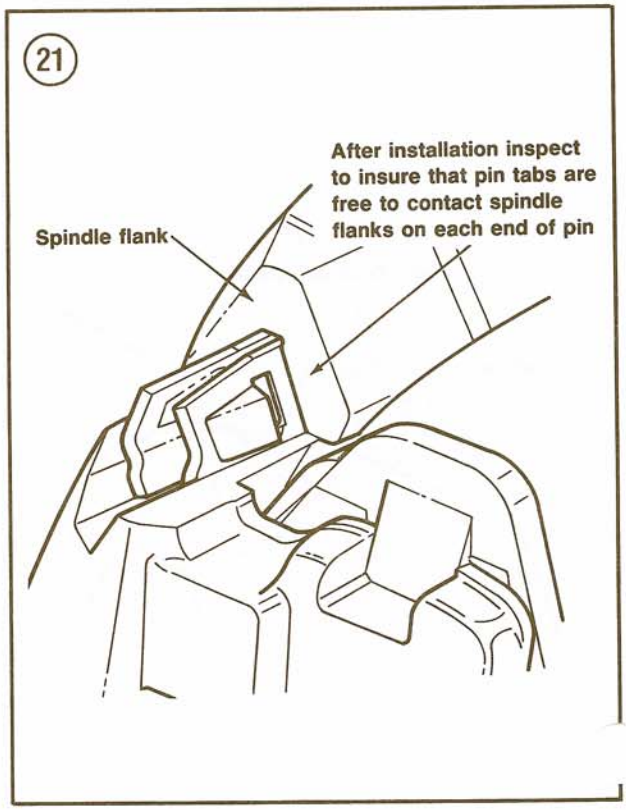

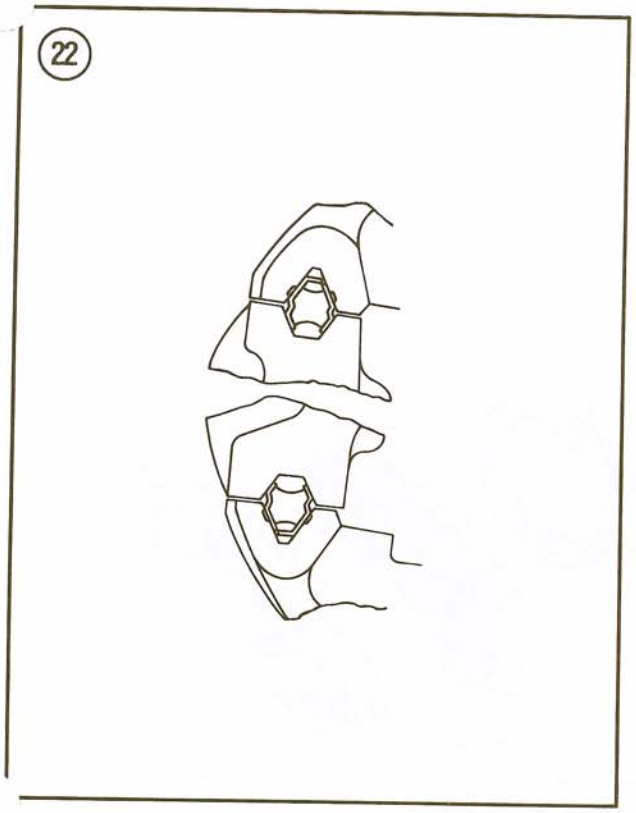

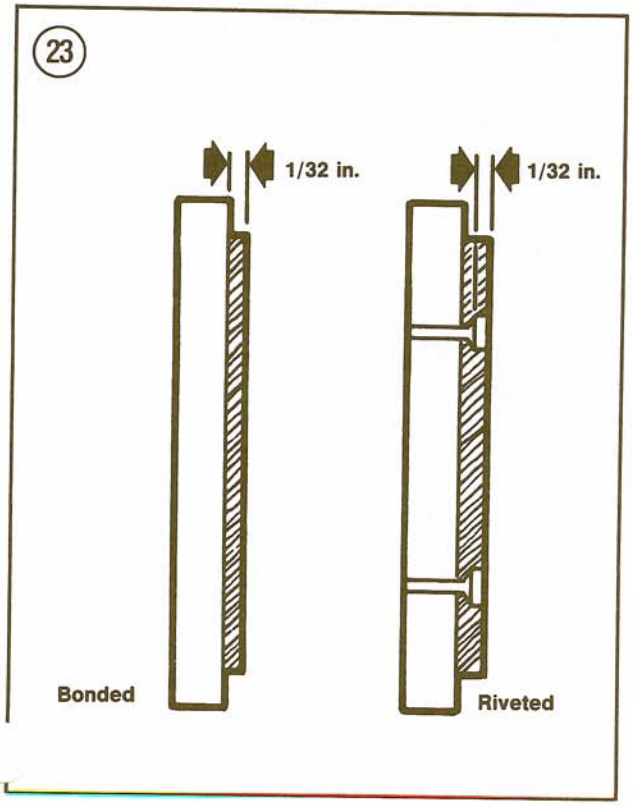

shows signs of leakage beyond a small amount of wetness inside the boot. If the caliper piston bores are corroded, scored or excessively worn, the caliper assembly must be replaced. Do not hone the piston bores.

Refer to **Figure 24** for this procedure.

1. Remove the caliper as described in this chapter.
2. Drain and discard any fluid in the caliper.
3. Mount the caliper in a vise fitted with protective jaws. If protective jaws are not available, wrap the caliper in shop cloths.
4. Remove the brake pads from the caliper assembly. Remove the anti-rattle spring, if so equipped.

WARNING

Do not attempt to remove the pistons in Step 5 by catching them with your fingers or by applying high air pressure. The pistons can be ejected with enough force to cause serious personal injury and/or damage to the pistons.

5. Place several layers of cloth or a block of soft wood over the caliper piston, then slowly apply low pressure compressed air to the brake line fitting and force the piston from its bore. Remove the piston and wooden block or shop cloths.
6. If the piston is cocked or seized in its bore and does not come far enough out of its bore for removal in Step 5, rap the edge of the piston sharply with a brass hammer, then reapply air pressure as in Step 5 and remove the piston.
7. Remove and discard the caliper dust boot.

13

CAUTION

Use a plastic or wooden dowel for seal removal in Step 8. Do not pry out with a screwdriver or other metal tool. This can scratch the piston bore or burr the seal groove edge.

8. Remove the piston seal from the piston bore and discard it.
9. Clean the caliper housing and piston with rubbing alcohol. Make sure all grooves and passages are clean, then blow dry with compressed air.
10. Clean all rust and corrosion from the caliper boot groove and the machined surfaces of the

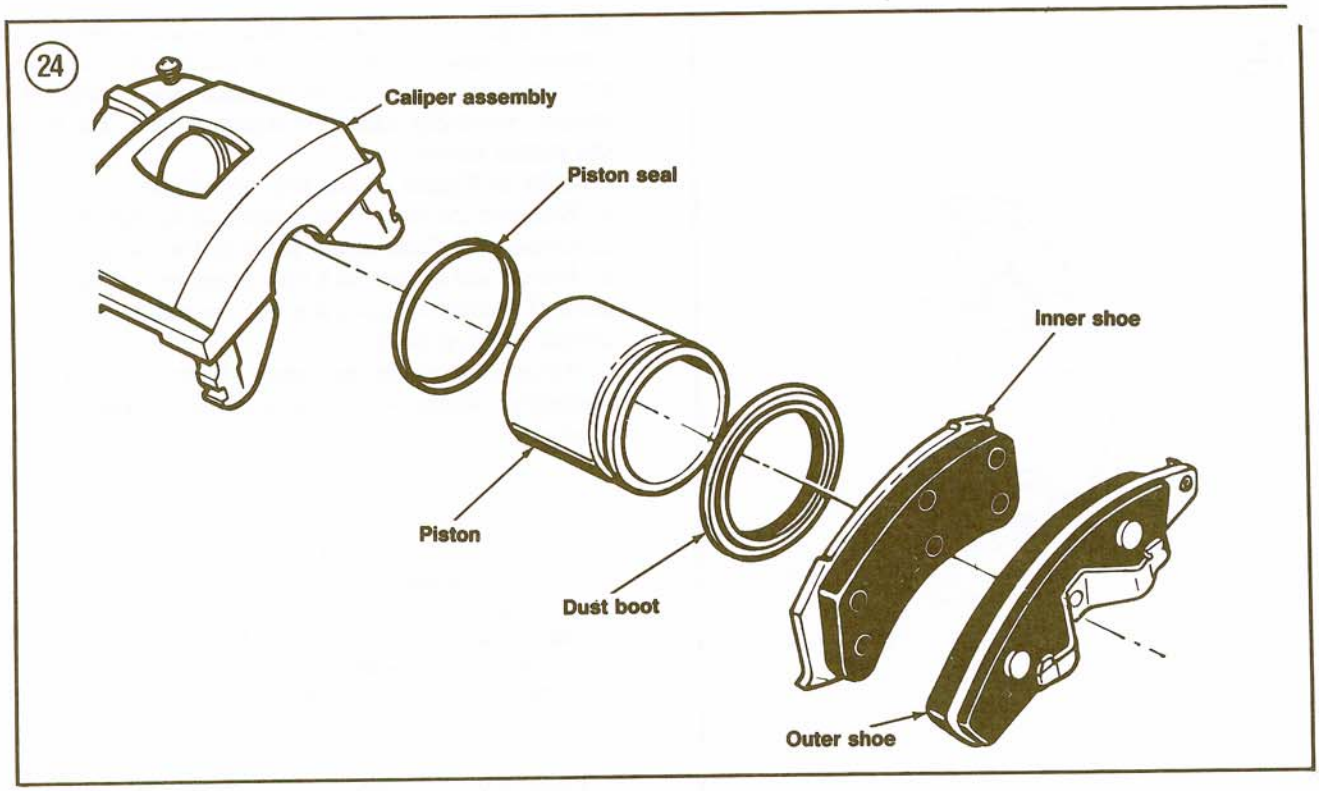

caliper housing/spindle assembly with a wire brush.

NOTE

Late-model calipers may use phenolic pistons. Do not discard a phenolic piston in Step 11 if it has surface irregularities or small chips between the boot grooves and pad face.

11. Inspect the caliper bore, seal and boot grooves and piston for pitting, scoring or excessive wear. Replace the caliper if any of these defects are present.
12. Dip a new piston seal in clean brake fluid and install it in the caliper bore groove. Use clean fingers to work the seal into the groove; make sure seal is properly seated. Make sure seal is not twisted or rolled.
13. Install a new dust boot. The flange should rest squarely in the outer groove of the bore.
14. Lubricate the piston with clean brake fluid and install in the caliper, spreading the boot over the piston as it is installed. Seat the dust boot in the piston groove.
15. Install the brake pads in the caliper assembly. Install the anti-rattle spring, if so equipped.
16. Install the caliper. See Steps 17-22 of *Pad Replacement* in this chapter. Use new copper washers when connecting the brake hose banjo fitting to the caliper and bleed the hydraulic system as described in this chapter before road testing the vehicle. Apply the brake pedal to center the pressure differential control valve warning switch.

Hub, Rotor and Splash Shield Removal

This procedure is used only with 2-wheel drive vehicles. For 4-wheel drive vehicles, see *Manual Locking Hubs* or *Automatic Locking Hubs*, Chapter Twelve. The rotor inspection procedure in this chapter applies to both 2- and 4-wheel drive vehicles.

1. Perform Steps 1-6 *Disc Pad Replacement* in this chapter. Suspend the caliper from the frame with wire to prevent stressing the brake line.

CAUTION

Do not damage or deform the hub grease cap by removing it with pliers in Step 2.

2. Tap the grease cap lightly with a hammer a pry it from the hub with a screwdriver.

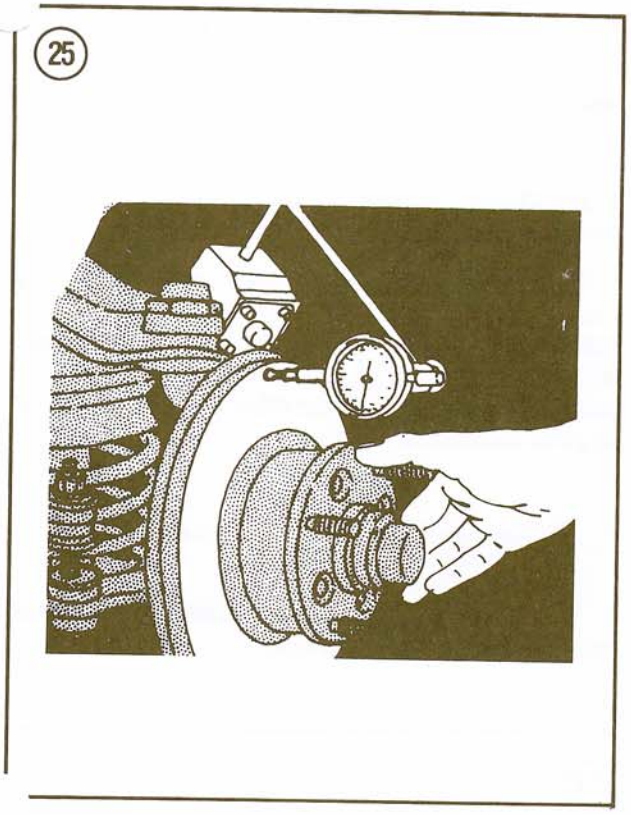

25

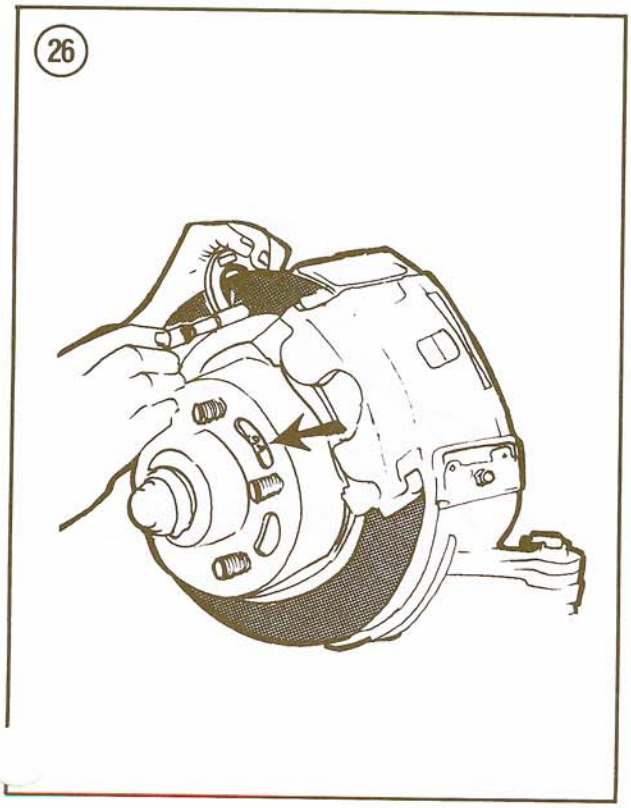

26

3. Remove the cotter pin, retaining nut lock, adjusting nut and washer.
4. Grasp the hub and rotor assembly in both hands and pull it off the spindle far enough to loosen the wheel bearing washer and outer wheel bearing.
5. Push the hub and rotor assembly back onto the spindle and take the washer and outer wheel bearing off.
6. Pull the hub and rotor assembly off the spindle together with the inner wheel bearing and grease seal. Discard the seal.
7. Remove the splash shield.

Rotor Inspection

1. Set the parking brake. Securely block both rear wheels so the truck will not roll in either direction. Remove the wheel covers or hub ornaments (if so equipped) and loosen the front wheel lug nuts.
2. Raise the front of the vehicle with a jack and place it on jackstands.
3. Remove the wheel/tire assemblies.
4. Tighten the spindle nut enough to eliminate all wheel bearing end play. Make sure the hub and rotor can still be rotated.
5. Attach a dial indicator to some part of the suspension so that the indicator stylus touches the rotor surface approximately one inch from the outer edge of the rotor. See **Figure 25**.
6. Set the dial indicator to zero, then slowly turn the brake rotor one complete revolution to check runout. Note the high and low readings on the indicator gauge. If the total between the high and low readings exceeds 0.002 in. (0.05 mm), replace the rotor.
7. Readjust the spindle nut to specifications after completing the runout check. See Chapter Ten (2-wheel drive) or Chapter Twelve (4-wheel drive).
8. Remove the brake caliper as described in this chapter.
9. Check the rotor for parallelism (thickness variation) with a micrometer at 12 equal points on the rotor (**Figure 26**). Take each reading with the micrometer positioned one inch from the edge of the rotor. If measurements vary more than 0.0005 in. (0.0127 mm), resurface or replace the rotor as required.
10. Use a micrometer to measure the thickness of the rotor at several points around the circumference and at varying distances from the center. If the rotor measures less than the minimum thickness stamped on the rotor (arrow, **Figure 26**), replace it.

11. Inspect the rotor for cracks, rust or scratches. Replace the rotor if cracked. Light rust can be removed with crocus cloth or medium emery paper. Heavy rust or deep scratches should be removed by resurfacing the rotor. This can be done by a dealer or machine shop. However, the rotor must not be machined more than 0.020 in. (0.508 mm) on each side. The finished thickness of the rotor should not be less than 0.81 in. (20.6 mm) or the number stamped on the rotor (arrow, **Figure 26**), if different.
12. Reinstall the brake caliper as described in this chapter.

Hub, Rotor and Splash Shield Installation

This procedure is used only with 2-wheel drive vehicles. For 4-wheel drive vehicles, see *Manual Locking Hubs* or *Automatic Locking Hubs*, Chapter Twelve.
1. Install the splash shield and tighten attaching bolts to 13-19 ft.-lb. (18-25 N•m).
2A. If a new rotor is being installed, remove the protective coating on the rotor surfaces with carburetor degreaser. New wheel bearings must be installed, using the procedures described in Chapter Ten.
2B. If the original hub and rotor assembly is being installed, pack the wheel bearings with grease. Keep the braking surface of the rotor clean. Install the bearings with a new seal. See Chapter Ten.
3. Slide the brake rotor and inner wheel bearing assembly onto the spindle.

CAUTION

Keep the rotor centered on the spindle to prevent damage to the grease seal and spindle threads.

4. Install the outer wheel bearing and washer. Install the adjusting nut and tighten it finger-tight. Make sure the rotor rotates freely.
5. Install the caliper as described in this chapter.
6. Adjust the wheel bearings as described in Chapter Ten.
7. Install the wheel/tire assemblies and finger-tighten the lug nuts. Lower the vehicle to the ground and tighten the lug nuts to specifications (**Table 1**) in an alternating pattern. Reinstall the wheel covers or hub ornaments, if so equipped.
8. Bleed the brakes. If the caliper brake hose was disconnected, center the pressure differential control valve as described in this chapter.

REAR DRUM BRAKES

The rear drum brakes are a duo-servo, single anchor, self-adjusting design. The drums fit over the rear wheel studs and are retained by three nuts.

Brake Drum Removal/Installation

If the brakes are simply being inspected for lining condition and remaining service life, be sure to remove the drums and inspect the brakes on both sides of the truck. A wheel cylinder failure can occur on one side while the other side appears to be in good condition.

WARNING

Do not inhale brake dust. It contains asbestos, which can cause lung cancer.

1. Securely block both front wheels so the truck will not roll in either direction.

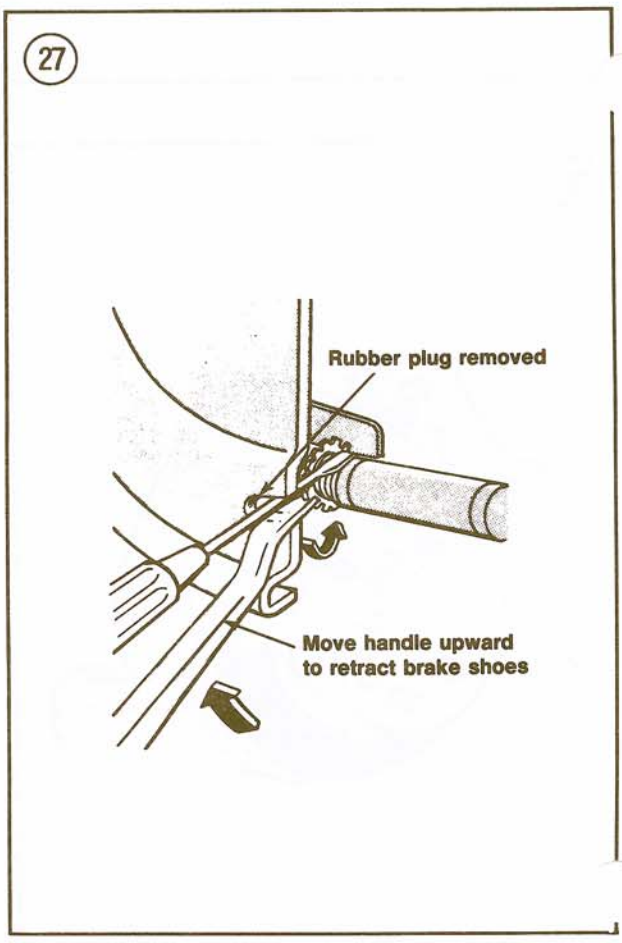

2. Remove the wheel covers or hub ornaments and loosen the rear wheel lug nuts.
3. Raise the rear of the vehicle with a jack and place it on jackstands.
4. Remove the rear wheel/tire assemblies.
5. Remove the retaining nuts. Remove the brake drum.
6. If the brake drum will not come off easily, remove the rubber plug from the brake adjusting hole in the backing plate. Insert a narrow screwdriver through the adjusting hole and disengage the adjusting lever from the adjusting screw. Hold the adjusting lever away from the adjusting screw and back off the screw with a brake adjusting tool. See **Figure 27**. Back off adjustment only if drum cannot be removed. Be careful not to damage notches in the adjusting screw; otherwise, the self-adjusting mechanism will not function properly. If adjustment was backed off, be sure adjuster lever is properly seated in the shoe web.
7. If a new drum is being installed, remove the protective coating with carburetor degreaser.
8. Install the brake drum and drum retaining nuts. Tighten the nuts evenly.
9. Install the wheel/tire assemblies and finger-tighten the lug nuts. Lower the vehicle to the ground and tighten the lug nuts to specifications (**Table 1**) in an alternating pattern. Reinstall the wheel covers or hub ornaments, if so equipped.

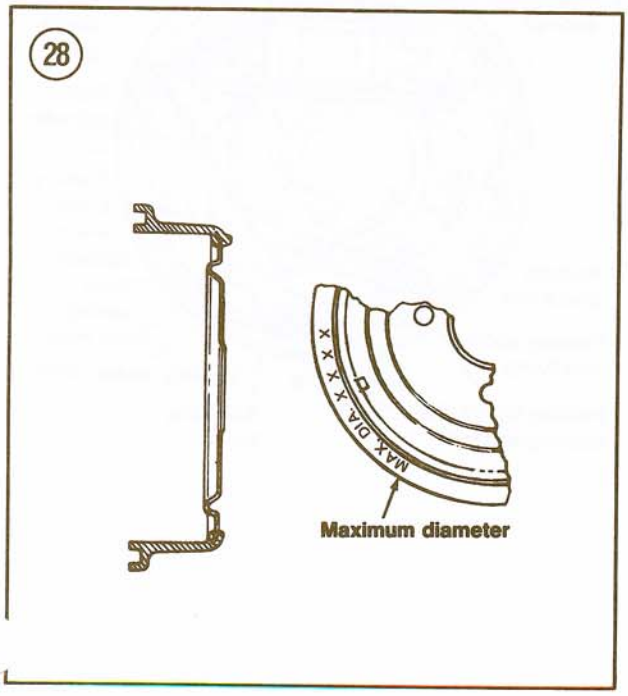

10A. If brake adjustment was backed off to remove the drum, adjust the brakes as described in this chapter.
10B. If adjustment was not backed off to remove the drum, drive the vehicle forward and backward several times, applying the brakes firmly. This will automatically adjust the brake linings.

Drum and Shoe Inspection (All Models)

WARNING

Do not clean brake drum or shoe assembly with compressed air in Step 1. Brake linings contain asbestos and the dust can be hazardous to your health. If the drum or shoe assembly is extremely dirty, clean with a vacuum cleaner or use an old paint brush and wear a painter's mask over your nose and mouth.

1. Wipe the inside of the drum with a clean dry cloth to remove any sand, dirt or other foreign matter. Clean all other parts (except the linings) with aerosol brake cleaner or new brake fluid. Do not use gasoline, kerosene or solvent as a cleaning agent.

CAUTION

If cleaning with brake fluid, keep it off the lining surfaces. Brake fluid will ruin the linings and they will have to be replaced.

2. Check drum for scoring, excessive or uneven wear, corrosion or glazed heat spots. Any scoring sufficiently deep to snag a fingernail is reason enough for having the drums turned and the linings replaced. Minor scratches or scoring can be removed with fine emery cloth. If this is done, clean thoroughly with compressed air to remove any abrasive. If heat spots (blue-tinted areas) are noted, replace the drum.
3. If you have precision measuring equipment, measure the drum for wear and out-of-roundness. If you do not have the equipment, this can be done by a dealer or machine shop. If the drum has surface damage or excessive runout, have it resurfaced on a lathe by a dealer or machine shop. However, the inside diameter after resurfacing must not exceed the specification stamped on the outside of the drum (**Figure 28**). If the drum would have to be cut larger than this to correct it, it must be replaced.

4. Inspect the lining material on the brake shoes. Make sure it is not cracked, unevenly worn or separated from the shoes. Dirt and foreign particles that are imbedded in the lining can often be removed with a wire brush, but lining replacement is recommended instead. Light surface oil or grease stains may be sanded off. If oil or grease has soaked beneath the surface, replace the shoes. Since brake fluid will ruin the linings, the shoes must be replaced if brake fluid has touched them. Shoes must also be replaced if the lining material has worn to within 1/32 in. of a rivet (riveted lining) or the shoe (bonded lining). **Figure 29** shows the wear dimension on riveted shoes.
5. Check all springs for signs of overheating, weakness or deformation (paint discoloration or distorted end coils indicate overheating). Replace as required.
6. Carefully pry back the lower edge of each wheel cylinder boot and check for leakage. A slight film of brake fluid on the rods is normal, but if there is an excessive amount of fluid in the boots, rebuild or replace the wheel cylinder as described in this chapter.
7. Check the operation of the adjuster screw. If it does not turn smoothly, disassemble, clean and lubricate it.
8. Inspect the backing plate for oil that may have leaked past the axle seal. If oil is present, replace the seals. See Chapter Eleven.

Shoe Removal

Brakes should be reconditioned on both wheels at the same time. In addition, new linings should be arced to the contour of the drums. This is a job for a Ford dealer or automotive brake specialist.

Refer to **Figure 30** for this procedure.
1. Remove the brake drum as described in this chapter.
2. Lift up on the adjusting lever and disengage it from the adjusting screw. Turn the adjusting screw in as far as it will go. Pull back on the adjuster lever until it can be unhooked from the hole in the secondary shoe. *Do not pry it out of the hole.*
3. Disconnect the adjuster spring and lever. Disconnect retracting springs from the anchor pin tool part No. 2035-N or a brake tool. Remove the cable anchor and cable guide.
4. Depress the shoe hold-down spring cups, remove the pins and remove the cups and springs. Note the color coding on the springs so they can be reinstalled in their correct positions.

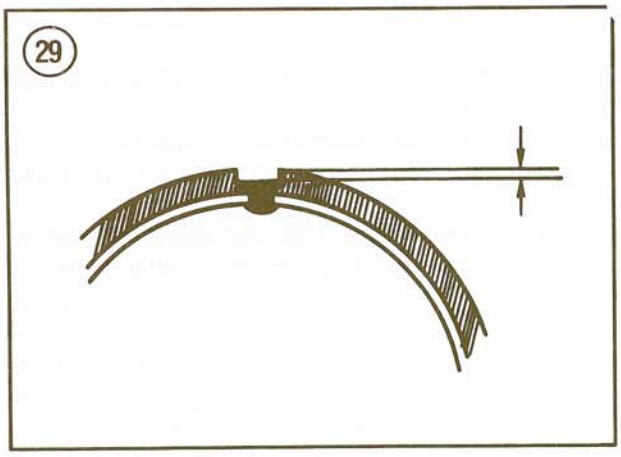

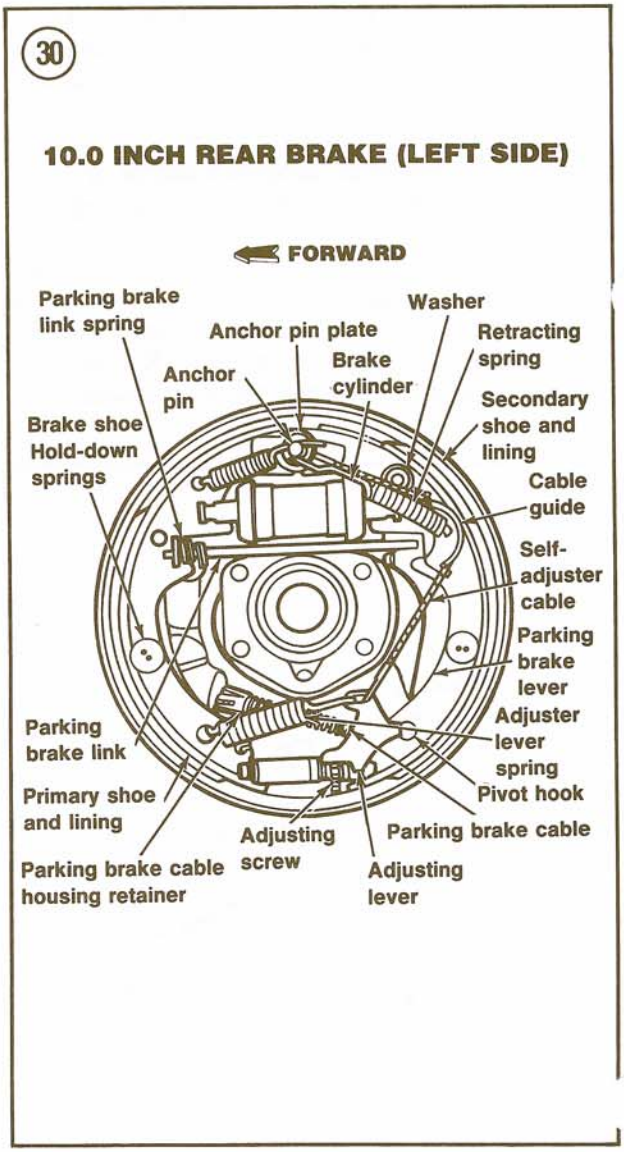

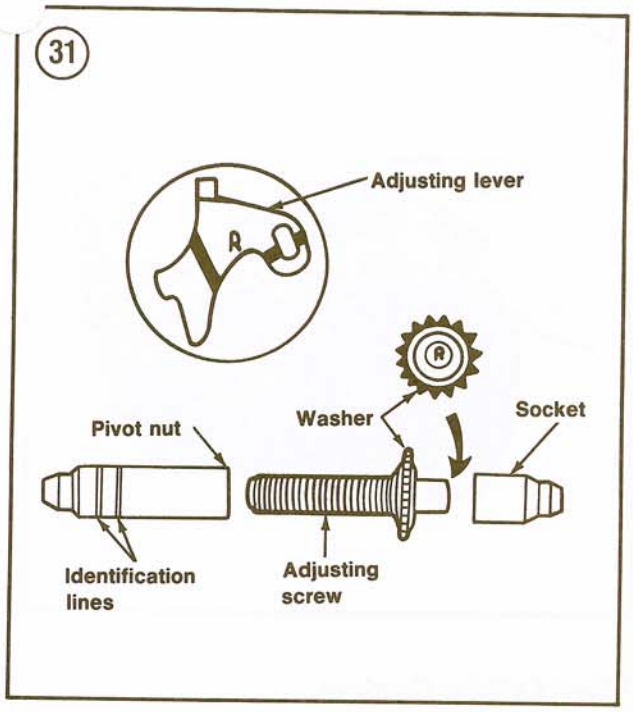

5. Remove the parking brake link and spring. Disconnect the cable from the lever.
6. Remove the shoes from the backing plate. Remove the clip and spring washer from the secondary shoe. Disconnect the parking brake lever.
7. Clean the brake backing plate with an aerosol brake cleaner and brush.

Shoe Installation

Refer to **Figure 30** for this procedure.

1. Clean your hands thoroughly and check the new linings to make sure they are not nicked or burred. If bonded linings are being installed, check for and remove any bonding cement along the edges.
2. Wipe a light coat of Disc Brake Caliper Slide grease part No. D7AZ-19590-A or equivalent on the backing plate shoe contact points.
3. Connect the parking brake lever to the secondary shoe with the spring washer and retaining clip.
4. Install the shoes on the backing plate with the hold-down springs, cups and pins.
5. Install the parking brake link, spring and washer. Connect the brake cable to the lever. Install the anchor pin plate and connect the cable anchor to the pin; the crimped side of the cable collar must face the backing plate.
6. Attach the primary shoe retracting spring to the anchor pin. Install the cable guide in the secondary shoe; the flange holes in the guide must fit into the hole in the web.
7. Route the cable around the guide, making sure it is in the groove and not between the guide and shoe.
8. Connect the secondary shoe retracting spring to the anchor pin. Check to make sure that the anchor pin plate, cable anchor and the hooks on the primary and secondary shoe retracting springs are all stacked flat on the anchor pin.
9. Assemble the adjuster (**Figure 31**), lubricating the components with Ford Multi-purpose Long-life lubricant part No. C1AZ-19590-B or equivalent. Make sure it is the correct one for the brake on which you are working. The adjusting screw and lever are stamped either "R" or "L" for right- and left-hand. The right-hand pivot nut has 2 machined identification lines (**Figure 31**); the left-hand nut has one line. If an adjuster is installed on the wrong brake, it will retract the shoes rather than expand them each time the automatic adjuster operates.
10. Thread the adjusting screw all the way into the nut, then back it off 1/2 turn. Install the socket on the end of the screw. Install the adjuster between the shoes with the screw facing the secondary shoe.
11. Connect the cable to the adjusting lever.
12. Engage the hook on the adjusting lever in the secondary shoe hole, then connect the adjuster spring. Check the action of the adjuster by pulling the cable (between the guide and adjuster lever) toward the secondary shoe far enough to lift the adjuster out of engagement with the adjuster screw notches. Release the cable; the adjuster lever should engage the next notch in the screw. The adjuster spring should pull the lever down to its original position, turning the screw one notch.
13. If the adjuster does not operate properly, check the following:

a. Make sure the cable ends are not pulled out of their crimped collars. If they are, replace the cable.
b. Make sure the groove in the cable guide is smooth. The groove must be parallel to the shoe and lie flat against the shoe web. Replace it if damaged.
c. Make sure the hook on the lever is square and parallel with the lever. If not, it may be possible to bend it until it is correct. If not, replace the lever.

d. Make sure the adjusting screw socket is seated in the secondary shoe notch.

14. When both brakes on the axle have been assembled, make a preliminary adjustment as follows:
   a. Pull the adjuster lever away from the adjusting screw just far enough to disengage it. Do not bend the lever.
   b. Turn the adjuster screw to expand the brake shoes just far enough so the drum can be installed with a slight drag, then loosen the adjuster screw 1 1/4 turns to retract the shoes.
15. Install the brake drums.
16. Install the wheel/tire assemblies and finger-tighten the lug nuts. Lower the vehicle to the ground and tighten the lug nuts to specifications (**Table 1**) in an alternating pattern. Reinstall the wheel covers or hub ornaments, if so equipped.
17. Make a final brake adjustment by repeatedly driving the vehicle forward and backward, stopping in each direction with firm brake pedal pressure until the pedal height and resistance are satisfactory.

Wheel Cylinder Replacement

CAUTION

Do not bend the brake line away from the wheel cylinder after unscrewing the nut. Bending the brake line will make it difficult to reconnect and may cause it to crack. The wheel cylinder will separate from the brake line when it is removed from the backing plate.

1. Remove the brake drum as described in this chapter.
2. Remove the brake shoes as described in this chapter.
3. Remove the cylinder-to-shoe connecting links.
4. Disconnect the brake line from the wheel cylinder at the rear of the backing plate (**Figure 32**).
5. Unbolt and remove the wheel cylinder from the backing plate.
6. Install the new or rebuilt wheel cylinder to the backing plate and tighten the fastener to specifications (**Table 1**).
7. Connect the brake line to the wheel cylinder port and tighten to specifications (**Table 1**).
8. Install the brake shoes and drum as described in this chapter.

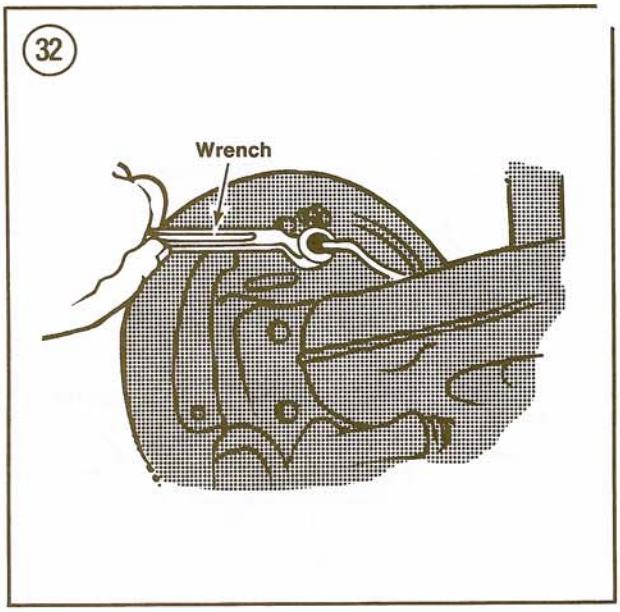

Wheel Cylinder Overhaul

Refer to **Figure 33** for this procedure.

1. Remove the wheel cylinder as described in this chapter.
2. Remove the boots, pistons, cups and piston return spring/cup expander assembly from the cylinder bore.
3. Remove the bleeder screw from the cylinder housing.
4. Discard all rubber parts. Clean the cylinder and pistons with rubbing alcohol. Do not use gasoline, kerosene or solvents. These leave a residue which can cause rubber parts to soften and swell.
5. Check the pistons for scratches, scoring or other defects. Replace if necessary.
6. Inspect the cylinder bore for scoring or corrosion. Light scoring or corrosion can be removed with crocus cloth. If the bore is badly scored or pitted, replace the wheel cylinder.
7. If the bore is resurfaced with crocus cloth, clean it a second time with rubbing alcohol and blow dry with compressed air.
8. Coat all parts with clean brake fluid.
9. Install the bleeder screw and tighten securely.
10. Install the return spring/piston expander assembly, cups and pistons in the cylinder bore.
11. Install a boot and link over each end of the cylinder. Clamp the pistons against the ends of the cylinder.
12. Install the wheel cylinder as described in th chapter.

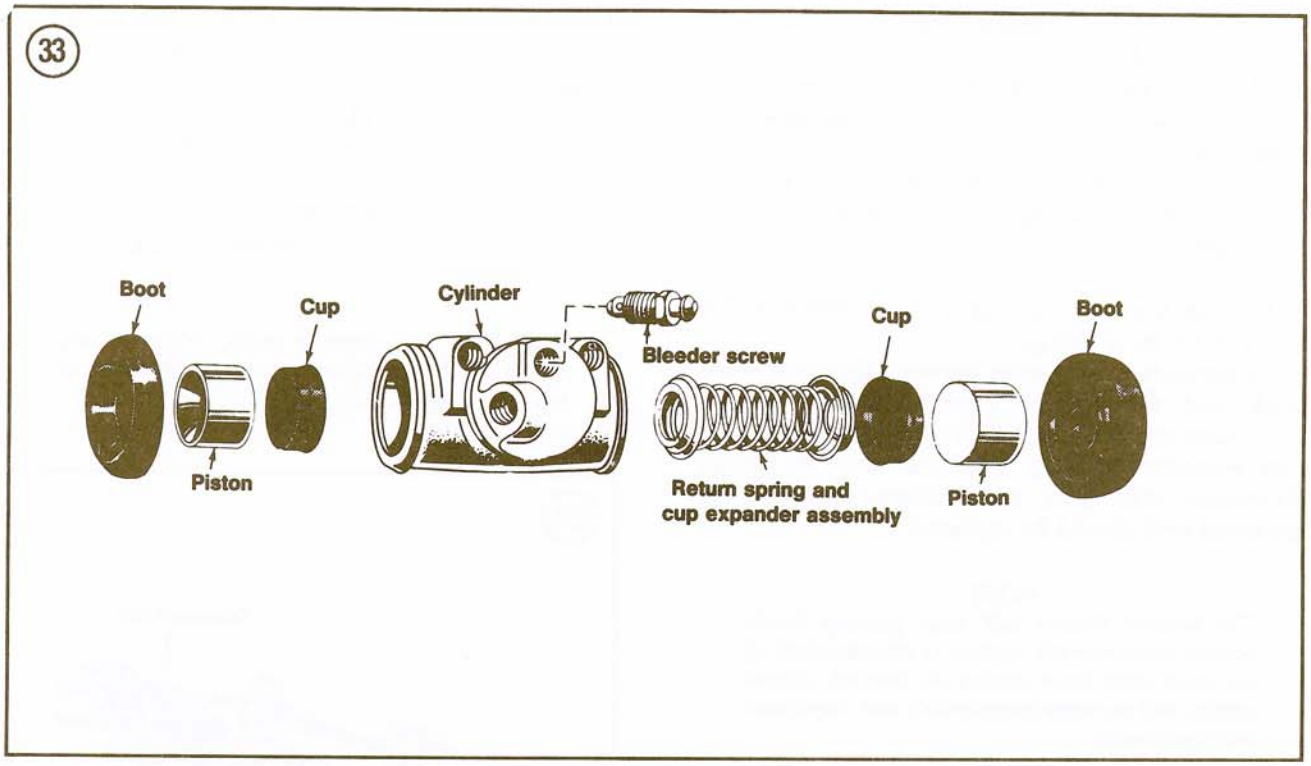

BRAKE ADJUSTMENT

Disc Brakes

Disc brakes are automatically adjusted. No adjustment procedure is necessary or provided.

Drum Brakes

Drum brakes are self-adjusting on all models. Adjustment occurs whenever the vehicle is driven in reverse and the brakes are applied. If the brake pedal can be depressed to within a couple inches of the floor, the brakes should be adjusted by backing the vehicle up several times and sharply applying the brakes. Test the adjustment by driving the vehicle at about 20 mph and braking to a smooth stop. If the pedal travel is still too great, adjust the brakes again as just described.

Manual adjustment is unnecessary unless the brakes have been serviced. Refer to **Figure 27** and use the following procedure:

1. Securely block both front wheels so the truck will not roll in either direction.
2. Raise the wheels off the floor and place the vehicle on jackstands.

NOTE

Brake drums should be at normal room temperature when adjusting the shoes. If the shoes are adjusted when the drums are hot and expanded, they may drag when the drums cool and contract.

3. Remove the adjusting hole cover from the backing plate. Working from the backing plate side, insert a narrow screwdriver blade through the adjusting hole. Push and hold the self-adjuster lever away from the adjusting wheel.
4. Turn the adjusting star wheel upward with a brake adjusting tool until the brakes lock the drum and prevent it from rotating.
5. Back off the adjusting star wheel until the brake drum can be turned with only a slight drag.
6. Repeat the procedure on the opposite wheel.

Parking Brake

The parking brake should be adjusted whenever the parking brake pedal can be moved more than 6 clicks. The service brakes should be adjusted as described in this chapter before adjusting the parking brake.

1. Securely block both front wheels so the truck will not roll in either direction. Raise the rear of the vehicle with a jack and place it on jackstands.

2. Depress the foot-operated parking brake pedal as far as possible.
3. Measure the distance between the cinch strap hook and the tension limiter bracket as shown in **Figure 34**.
4. Hold the threaded rod with a pair of pliers to prevent it from rotating. Tighten the equalizer nut (A, **Figure 35**) 6 full turns beyond its original position on the rod.
5. Release the parking brake, then depress it 3-4 times as far as it will go.
6. Remeasure the distance between the cinch strap hook and the tension limiter bracket. If the dimension did not change by at least 1/8 in. from that recorded in Step 3, repeat Step 4. If the dimension still does not change, the cable is stretched and should be replaced.

NOTE

The tension limiter will reset parking brake tension whenever the system is disconnected. If the cinch strap hook touches the bracket, system tension will increase considerably and may cause over-tensioning.

7. Make sure the cinch strap hook does not touch the bracket. Release the parking brake and check for rear wheel drag.
8. Remove the jackstands and lower the vehicle to the ground.

MASTER CYLINDER

The dual master cylinder contains a double hydraulic cylinder with 2 fluid reservoirs. On vehicles equipped with non-power brakes, the master cylinder is attached directly to the cowl. If the vehicle is equipped with power brakes, the master cylinder is attached to the vacuum booster unit.

A cast iron master cylinder housing is used with 1983-1986 models. An aluminum master cylinder with translucent plastic reservoir is used on all 1987 models. This master cylinder contains a fluid level indicator and integral proportioning valve. This changes the function of the brake warning light on the instrument panel to a low fluid level indicator light.

Removal/Installation (Non-power Brakes)

Refer to **Figure 36** for this procedure.
1. Working in the cab, disconnect the stoplight switch wires.
2. Remove the retaining pin or nut holding the master cylinder pushrod to the brake pedal.
3. Remove the spacers, stoplight switch and pushrod from the brake pedal arm.
4. Place shop cloths underneath the master cylinder hydraulic line fittings to catch leaking fluid. Disconnect the hydraulic lines at the master cylinder. Cap the lines to prevent leakage.

CAUTION

Brake fluid will damage paint. Wipe up any spilled fluid immediately, then wash the area with soap and water.

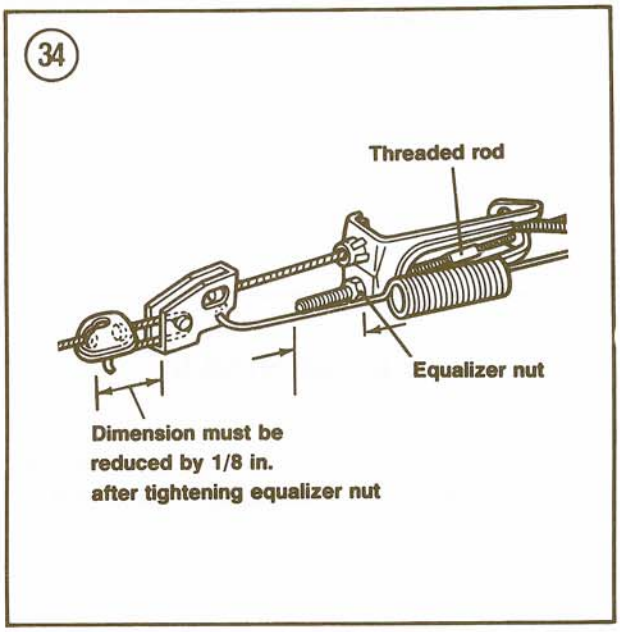

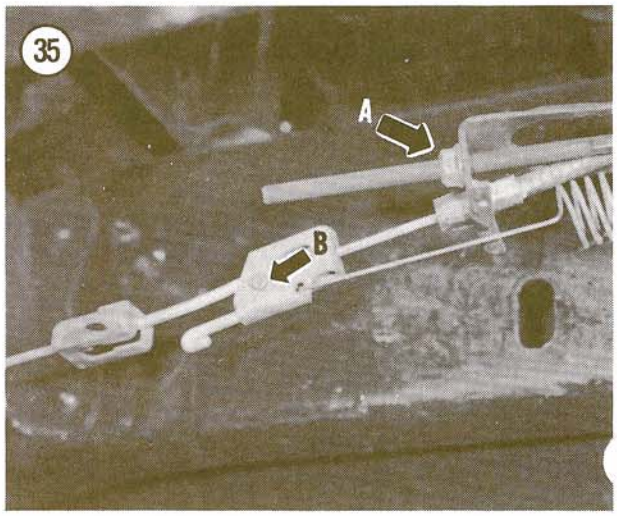

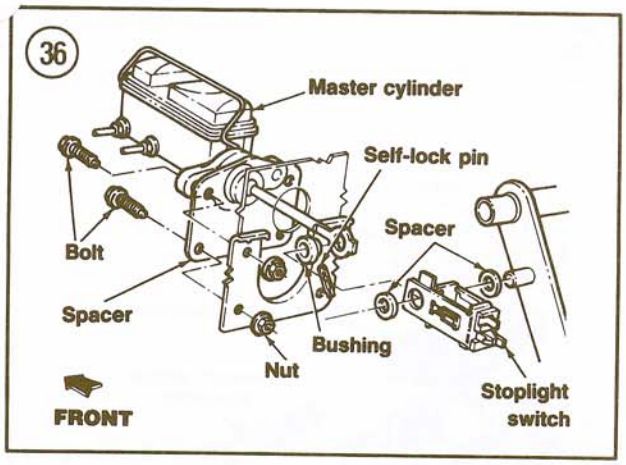

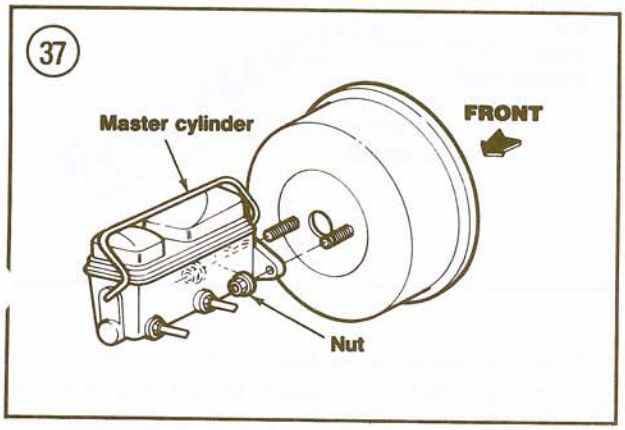

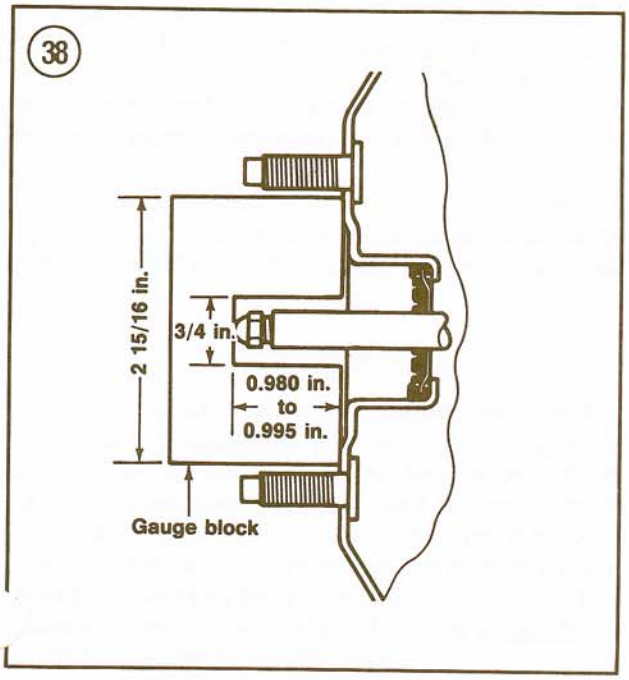

5. Unplug the brake warning light wire from the plastic socket on the reservoir, if so equipped.

6. Remove the master cylinder-to-cowl nuts. Remove the master cylinder.

7. Remove the boot from the master cylinder pushrod.

8. Installation is the reverse of removal. Tighten the attaching bolts to 13-25 ft.-lb. (18-33 N•m). Bleed the brakes and center the pressure differential control switch as described in this chapter. Fill the master cylinder reservoirs with clean DOT 3 or DOT 4 brake fluid to within 1/4 in. of the top of the reservoir divider.

Removal/Installation (Power Brakes)

Refer to **Figure 37** for this procedure.

1. Depress the brake pedal (with the engine off) to dissipate any vacuum remaining in the brake booster system.

2. Place shop cloths underneath the master cylinder hydraulic line fittings to catch leaking fluid. Disconnect the hydraulic lines at the master cylinder. Cap the lines to prevent leakage.

CAUTION

Brake fluid will damage paint. Wipe up any spilled fluid immediately, then wash the area with soap and water.

3. Unplug the brake warning light wire from the plastic socket on the reservoir, if so equipped.

4. Remove the 2 attaching nuts from the booster unit studs.

5. Before installing the master cylinder, check the distance from the outer end of the pushrod to the front face of the booster assembly. Turn the pushrod in or out as required to obtain the specified length shown in **Figure 38**.

6. Installation is the reverse of removal. Tighten the attaching bolts to 13-25 ft.-lb. (18-33 N•m). Bleed the brakes and center the pressure differential control switch as described in this chapter. Fill the master cylinder reservoirs with clean DOT 3 or DOT 4 brake fluid to within 1/4 in. of the top of the reservoir divider.

Overhaul

Refer to **Figure 39** for this procedure.

1. Clean outside of master cylinder, then remove reservoir cover and diaphragm. Drain and discard all brake fluid. Remove pushrod retainer from pushrod on manual brake master cylinders.
2. Depress the primary piston and remove the snap ring holding the primary and secondary piston assemblies in the cylinder bore.
3. Remove and discard the primary piston assembly.

CAUTION

Use only low-pressure compressed air in Step 4 to avoid personal injury or piston damage.

4. Direct compressed air into the rear brake outlet port of the cylinder body and blow the secondary piston out. Discard the piston assembly.
5. Clean the master cylinder in rubbing alcohol. Check all openings, recesses and internal passages to be sure they are clean and free from foreign particles. Use the air hose to blow any dirt and cleaning solvent out. If the bore is etched, pitted, scored or corroded, discard the master cylinder and install a new one.
6. Dip the overhaul kit piston assemblies in clean brake fluid.
7. Install the complete secondary piston assembly in the master cylinder bore.
8. Install the complete primary piston assembly in the master cylinder bore.
9. Depress the primary piston and install the snap ring in the master cylinder bore groove.
10. On manual brake master cylinders, install the pushrod retainer on the pushrod and insert it in the primary piston. The retainer should seat fully and hold the pushrod securely.

Bleeding

Prior to installing the master cylinder, bleed it as follows:

1. Support the master cylinder body in a vise with protective jaws. If protective jaws are not available, wrap the body with several layers of clean shop cloths.
2. Fill the master cylinder with clean DOT 3 or DOT 4 brake fluid.
3. Install plugs in the front and rear brake outlet bores to prevent air from entering the master cylinder during the bleeding procedure. Loosen the plug in the rear brake outlet port.

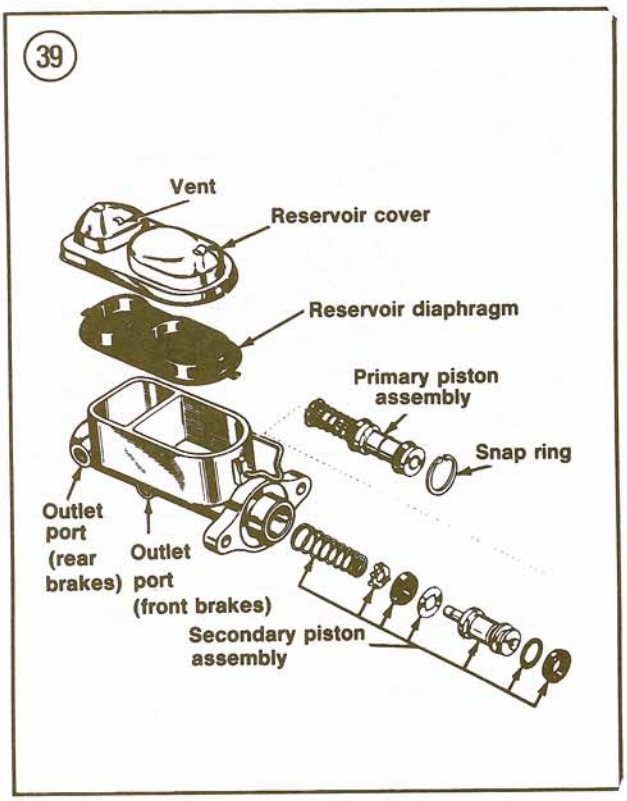

4. Slowly depress the primary piston several times until no air bubbles appear in the brake fluid. Tighten the plug while the piston is depressed to prevent air from entering the master cylinder.
5. Loosen the plug in the front brake outlet port and repeat the procedure in Step 4 to bleed the front brake outlet port.
6. Tighten both plugs securely, then depress the piston. If all air has been expelled, it should require considerable effort.
7. Install the cover and diaphragm assembly. Make sure the cover retainer is installed properly, then remove the plugs and install the master cylinder.

BRAKE BLEEDING

After long usage, brake fluid absorbs enough atmospheric moisture to significantly reduce its boiling point and make it prone to vapor lock during repeated hard braking applications, such as mountain driving. Such moisture also contributes to corrosion in the master cylinder, wheel cylinders and disc calipers. While no hard and fast rule exists for changing the fluid in the brake system, it should be checked at least annually by bleeding fluid from

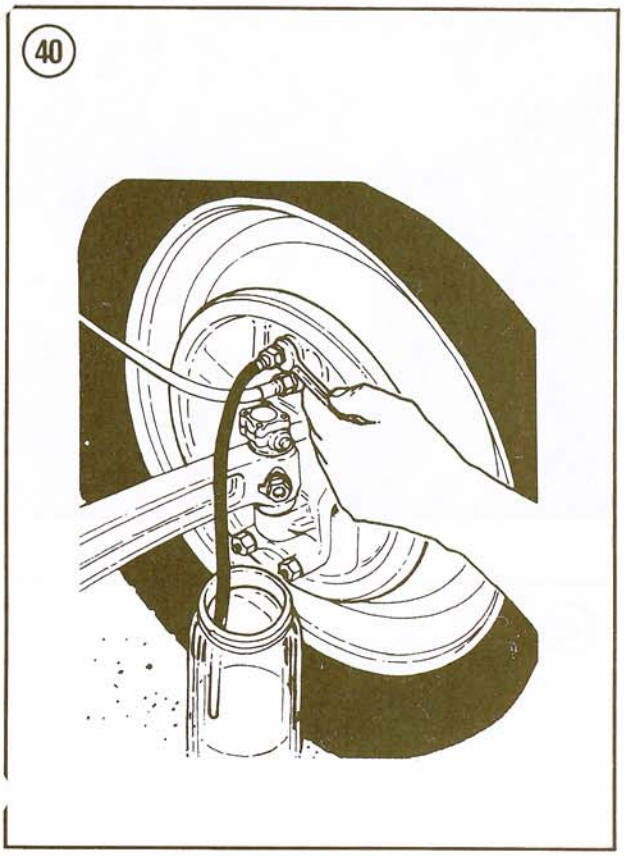

one of the wheel cylinders and inspecting it for signs of moisture. If moisture is present, the entire system should be drained and bled.

The hydraulic system should be bled whenever air enters it. Air in the brake lines will compress, rather than transmit pedal pressure in the brake operating parts. If the pedal feels spongy or if pedal travel increases considerably, brake bleeding is usually called for. Bleeding is also necessary whenever a brake line is disconnected.

This procedure requires handling brake fluid. Be careful not to get any fluid on brake rotors, pads, drums or linings. Clean all dirt from the bleed valves before beginning the procedure. Two people are needed, one to operate the brake pedal and the other to open and close the bleed valves.

Since the brake system consists of 2 individual systems, each system is bled separately. Bleeding should be done in the following order: master cylinder, right rear, left rear, right front and left front.

If the vehicle has power brakes, exhaust the vacuum reserve by applying the brakes several times.

If the master cylinder was bench-bled before installation, omit Steps 2-4.

NOTE

Do not allow the master cylinder reservoirs to run dry during bleeding.

1. Clean away all dirt around the master cylinder reservoir cover. Remove the cover and diaphragm assembly. Top up the reservoirs with brake fluid marked DOT 3 or DOT 4, if necessary. Leave the cover off the reservoirs and place a clean shop cloth over the top of the master cylinder to prevent contamination of the fluid.

NOTE

DOT 3 means that the brake fluid meets current Department of Transportation quality standards. If the fluid does not say DOT 3 somewhere on the label, buy a brand that does. DOT 4 brake fluid can also be safely used.

2. Loosen the master cylinder hydraulic line nuts and wrap a shop cloth under the fittings to catch any leaking fluid.
3. Have the assistant slowly depress the brake pedal by hand until it reaches the floorboard and hold it there while you tighten the master cylinder hydraulic line nuts loosened in Step 2.
4. Repeat Step 2 and Step 3 as required until the brake pedal is firm and no air escapes from the fitting.
5. Fit an appropriate size box-end wrench over the bleeder screw on the right rear wheel and attach a length of plastic or rubber tubing to the bleed valve. Be sure the tubing fits snugly on the screw. Immerse the other end of the tubing in a container partially filled with clean DOT 3 or DOT 4 brake fluid. See **Figure 40**.

NOTE

Do not allow the end of the tube to come out of the brake fluid during bleeding. This could allow air into the system and the bleeding procedure would have to be done over.

6. Have the assistant slowly depress the brake pedal 2 or 3 times, then hold it down.
7. With the brake pedal depressed, open the bleed valve 3/4 turn. Let the brake pedal sink to the floor, then close the bleed valve. Do not let the pedal up until the bleed valve is closed.

8. Let the pedal back up slowly. Wait 15 seconds.
9. Repeat Steps 3-5 (including the 15-second wait) until the fluid entering the jar is free of air bubbles.
10. Repeat this procedure at each of the remaining bleed valves. Top up the master cylinder after bleeding each wheel to prevent the reservoirs from running dry.
11. Road test the vehicle to make sure the brakes operate properly. If the brake warning light remains on after the system has been bled and braking action is satisfactory, center the pressure differential control valve as described in this chapter.

NOTE

Keep an eye on the brake fluid level in the master cylinder during bleeding. If the fluid level is allowed to drop too low, air will enter the brake lines and the entire bleeding procedure will have to be repeated.

POWER BRAKE VACUUM BOOSTER

The Bendix vacuum booster is not serviceable and must be replaced as an assembly if defective. The booster check valve (**Figure 41**) is the only component on the booster assembly which can be serviced.

Vacuum is supplied to the booster unit through an intake manifold fitting on gasoline engines. See **Figure 42** (4-cylinder) or **Figure 43** (V6).

A vacuum pump located on the top of the engine supplies vacuum to the booster on diesel engines. See **Figure 44**.

Booster Testing

1. Check the brake system for hydraulic leaks. Make sure the master cylinder reservoirs are filled to within 1/4 in. of the top of the divider.
2. Start the engine and let it idle for about 2 minutes, then shut it off. Place the transmission in NEUTRAL and set the parking brake.
3. Depress the brake pedal several times to exhaust any vacuum remaining in the system.
4. When the vacuum is exhausted, depress and hold the pedal. Start the engine. If the pedal does not start to fall away under foot pressure (requiring less pressure to hold it in place), the vacuum booster is not working properly.
5. Disconnect the vacuum line at the booster check valve. Connect a vacuum gauge with a tee fitting

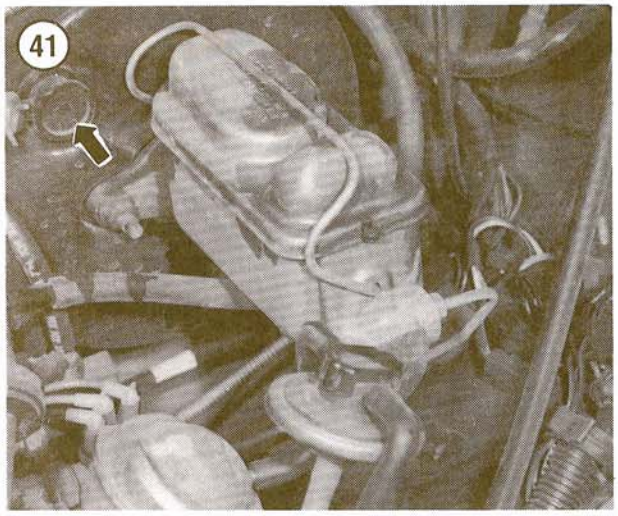

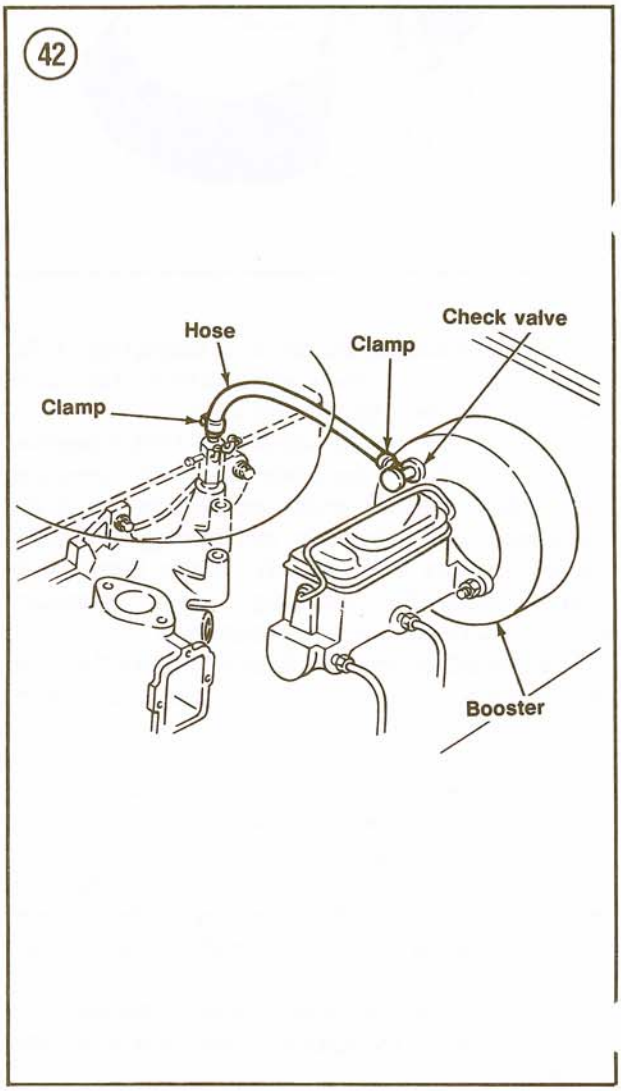

43

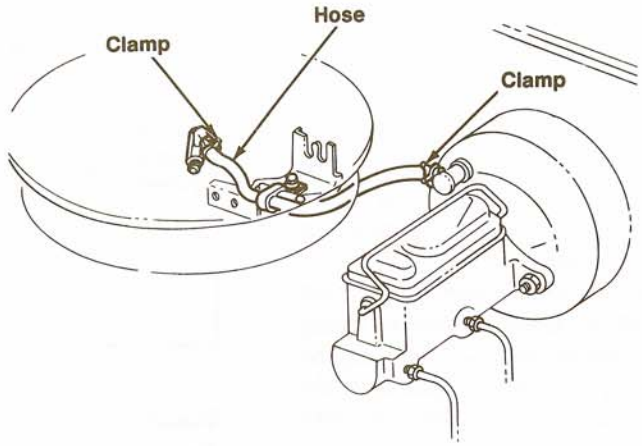

44

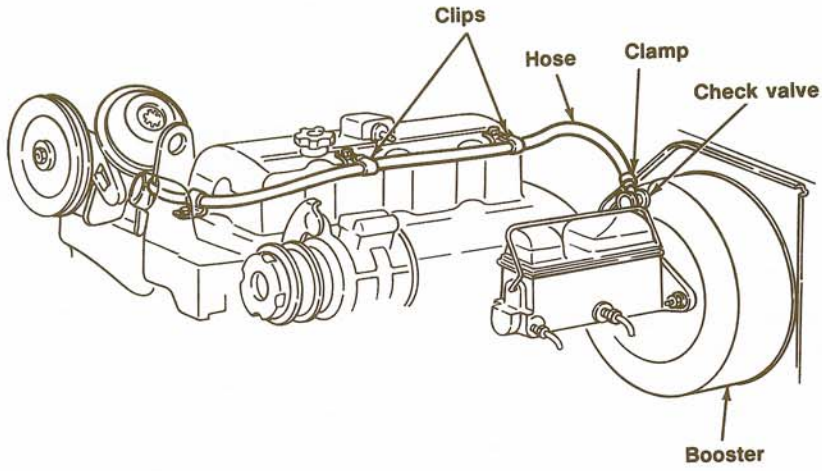

13

directly to the vacuum line on diesel engines. Connect a vacuum gauge directly to the vacuum pump on diesel engines. Start the engine and check the gauge reading at idle.

a. Gasoline engine—If the gauge does not read at least 18-21 in. Hg (at sea level), tune the engine. See Chapter Three. If tuning the engine does not solve the problem, there is a vacuum leak in the system.
b. Diesel engine—If the gauge does not read at least 21 in. Hg. (at sea level), check the vacuum pump drive belt tension and make sure that the fast idle speed is within specifications (Chapter Three). If these are correct, replace the vacuum pump as described in this chapter.

6. Diesel engine—Remove the vacuum gauge from the pump and reconnect the gauge with a tee fitting to restore the system operation. Start the engine and run at idle, watching the vacuum gauge. If the reading drops by more than 3 inches, there is a leak in the system.
7. Shut the engine off and watch the vacuum gauge. If the reading drops by more than one inch in one minute, replace the check valve.
8. With the engine off, the vacuum gauge connected and the system holding vacuum as specified in Step 5, depress and hold the brake pedal for several seconds, then release it. If the vacuum reading drops to zero, replace the booster.
9. Run the engine for at least 10 minutes at fast idle. Shut the engine off and let it stand for 10 minutes. Depress the brake pedal with about 20 lb. of force. If the pedal feel is not the same as it was with the engine running, replace the booster unit.

Vacuum Hose and Check Valve Inspection

1. Check the vacuum hose for leaks or loose connections. Replace or tighten as required.
2. Loosen the clamp holding the manifold vacuum hose to the booster check valve (**Figure 41**). Disconnect the hose and remove the check valve from the booster unit.
3. It should be possible to blow air into the brake booster end of the valve, but not into the intake manifold end. If air flows both ways or neither way, replace the check valve.

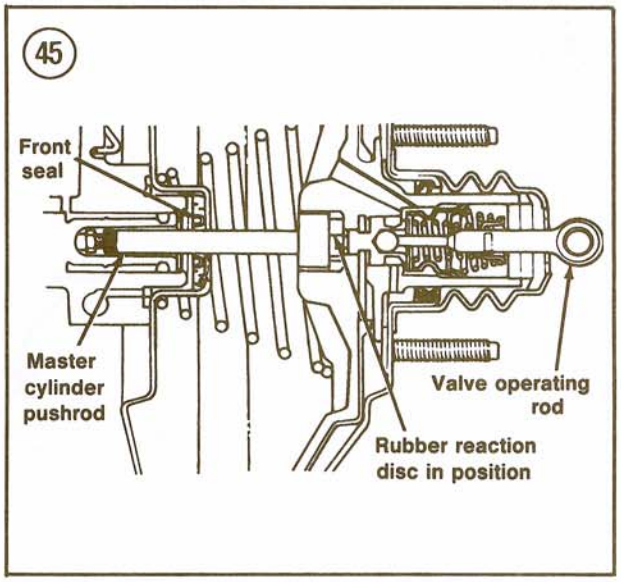

Booster Removal/Installation

1. Disconnect the negative battery cable(s).
2. Depress the brake pedal to expel any vacuum remaining in the brake booster system.
3. Loosen the clamp holding the manifold vacuum (gasoline) or vacuum pump (diesel) hose to the booster check valve. Remove the hose and check valve.
4. Support the master cylinder with a wooden block, then remove the nuts holding it to the booster assembly. Pull the master cylinder away from the booster unit.
5. Working inside the cab, remove the pin holding the stoplight switch and pushrod to the brake pedal arm. Note the positioning of the spacers used, then slide the stoplight switch, pushrod, spacers and bushing off the pedal arm.
6. From inside the cab, remove the nuts holding the booster unit to the firewall. Remove the booster unit from the engine compartment.
7. Make sure the black reaction disc is positioned as shown in **Figure 45**. If the master cylinder pushrod was disturbed during removal, it will dislodge the disc. This will result in excessive pedal travel or improper operation when reinstalled.
8. Check the distance between the outer end of the booster unit pushrod and the front face of the booster unit with a gauge fabricated as shown in **Figure 38**. Turn the pushrod adjusting screw in or out until dimension A in **Figure 38** is 0.980-0.99[illegible] in.

9. Installation is the reverse of removal. Since the master cylinder lines are not disconnected during this procedure, it is not necessary to bleed the brake system. Road test the vehicle to make sure the brakes work properly.

VACUUM PUMP (DIESEL ENGINE)

A diesel engine does not produce enough vacuum to power a vacuum brake booster unit. The necessary vacuum is provided by a belt-driven pump located on the right front side of the engine near the alternator. The pump is non-serviceable and is replaced if it does not function properly.

A low-vacuum switch is incorporated in the circuit. The switch is mounted near the pump to sense the vacuum level and turns on the instrument panel brake warning light when the level is low. **Figure 46** shows the vacuum pump and switch installation.

See Chapter Three for pump drive belt tension adjustment.

Vacuum Pump Removal/Installation

Refer to **Figure 47** for this procedure.

1. Loosen the pump adjustment and pivot bolts.
2. Slide the pump downward and remove the drive belt.
3. Unclamp and disconnect the vacuum line at the pump.
4. Remove the pivot bolt, adjustment slot nut and rear support bolt. Remove the pump and plate assembly.
5. Unbolt the pump from the adjustment plate.
6. Installation is the reverse of removal. Tighten fasteners to specifications (**Table 1**). Adjust the alternator drive belt tension, then the vacuum pump drive belt tension (Chapter Three). Start the engine and watch the brake warning light. It should stay on until the vacuum level builds up to normal, then go out.

Low-vacuum Indicator Switch Removal/Installation

Refer to **Figure 46** for this procedure.

1. Disconnect the vacuum line at the switch.

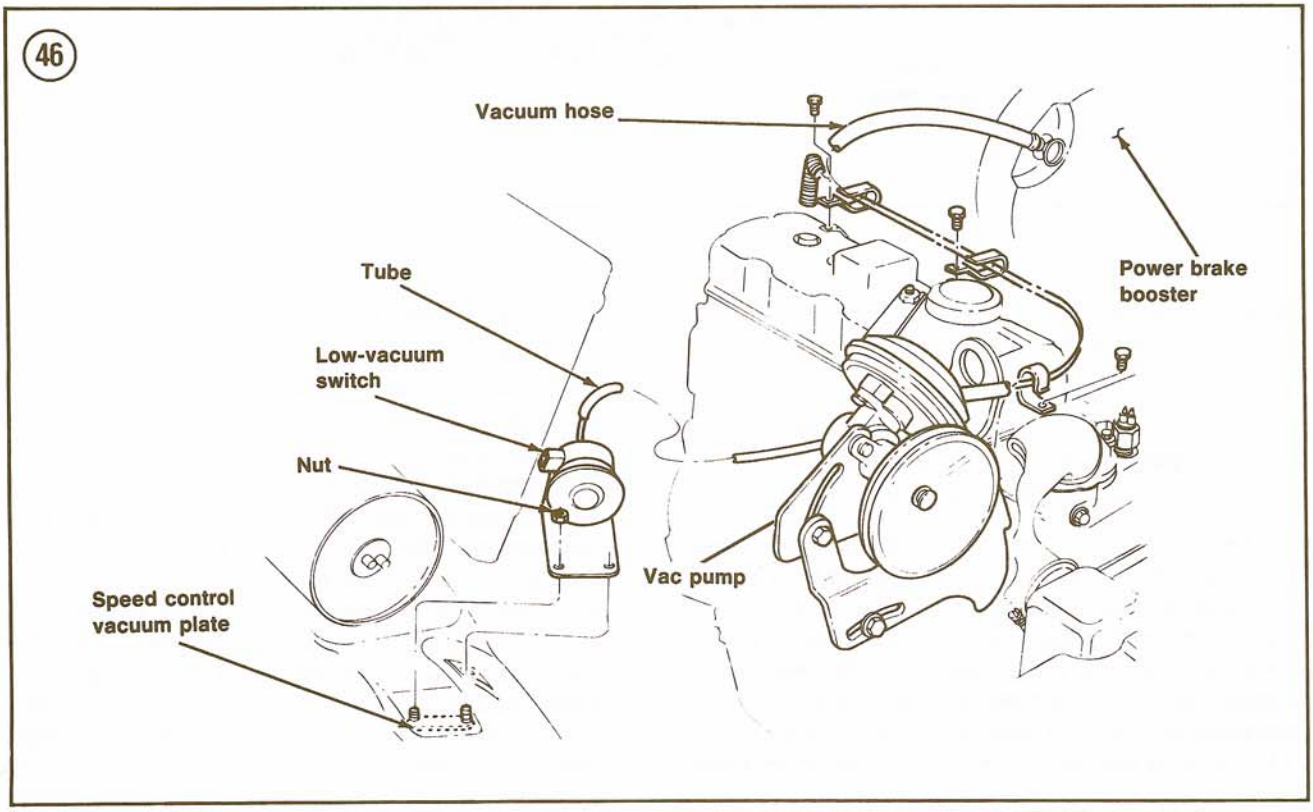

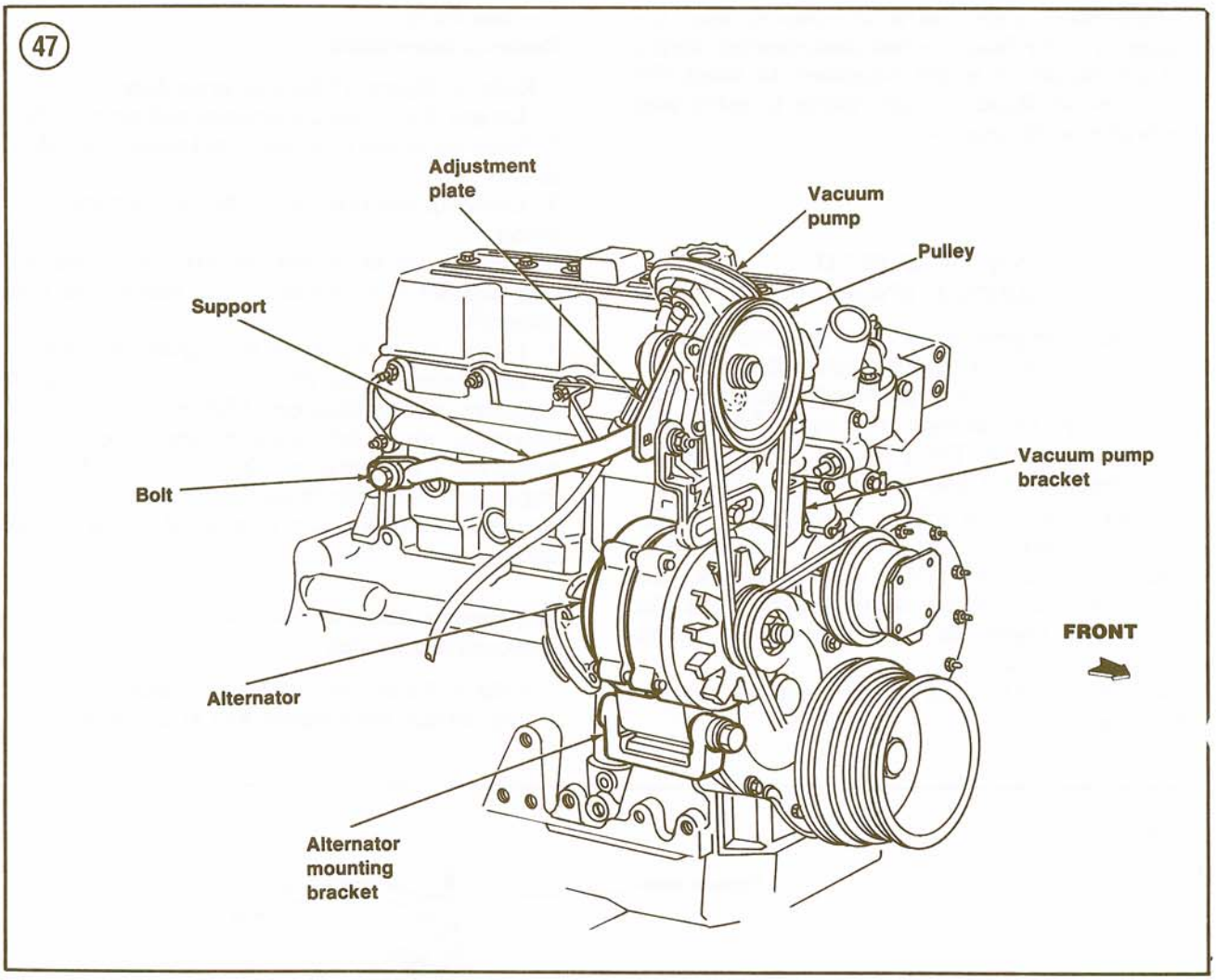

2. Remove the 2 nuts holding the switch bracket. Remove the switch and bracket assembly.
3. Installation is the reverse of removal.

PRESSURE DIFFERENTIAL CONTROL VALVE

The pressure differential control valve and warning light switch are combined into a single unit and mounted under the vehicle on the left frame side rail (**Figure 48**). If hydraulic pressure drops severely in either the front or rear brake circuit, the valve operates the switch which in turn activates the warning light on the instrument panel. The valve is not serviceable and must be replaced if it does not function properly.

Warning Light Switch Electrical Circuit Testing

1. Set the parking brake. Securely block both rear wheels so the truck will not roll in either direction. Raise the front of the vehicle with a jack and place it on jackstands.
2. Expand the plastic lugs on the warning switch wire connector shell. Remove the connector from the warning light switch at the rear of the pressure differential control valve.
3. Ground the connector with a jumper lead.
4. Have an assistant turn the ignition ON. The instrument panel warning lamp should light. If it does not, check for a burned-out bulb or a short in the circuit wiring. If the lamp still does not light replace the valve assembly as described in this chapter.

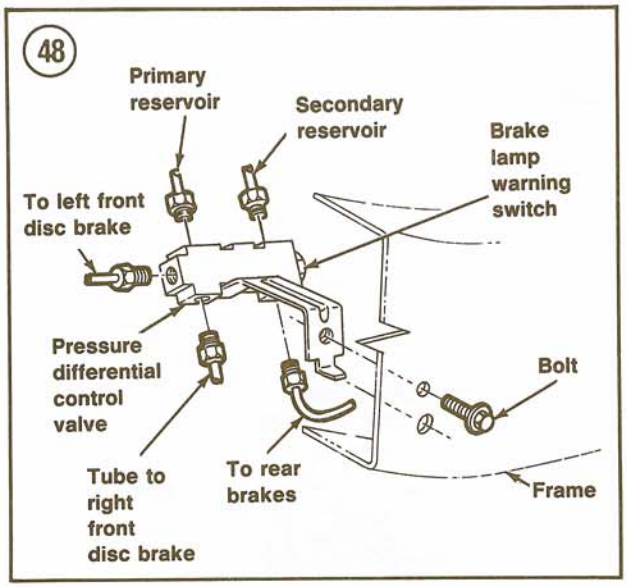

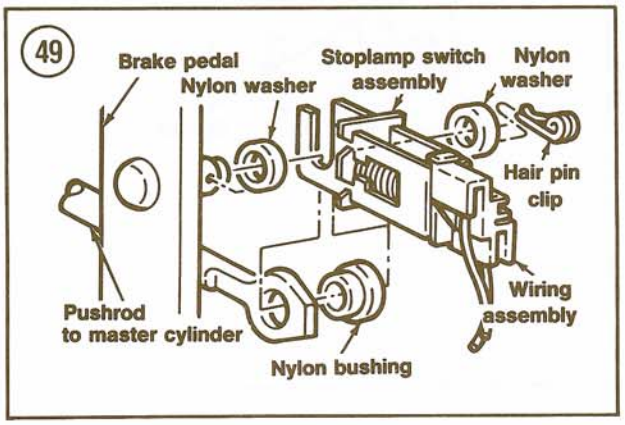

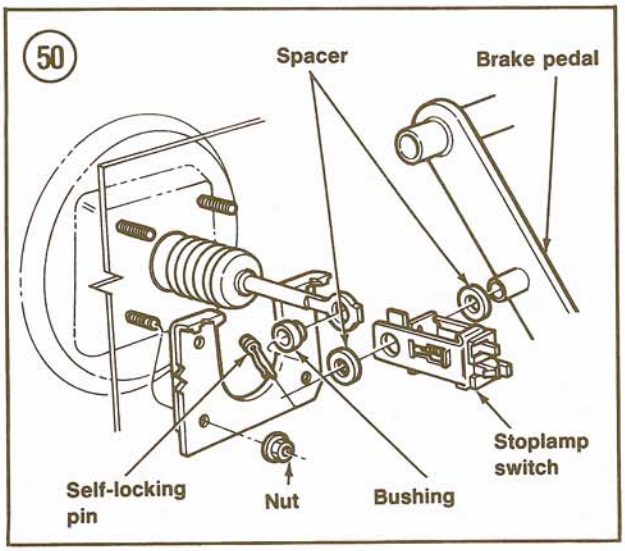

Valve Replacement

Refer to **Figure 48** for this procedure.

1. Set the parking brake. Securely block both rear wheels so the truck will not roll in either direction. Raise the front of the vehicle with a jack and place it on jackstands.
2. Expand the plastic lugs on the warning switch wire connector shell. Remove the connector from the warning light switch at the rear of the pressure differential control valve.
3. Disconnect the hydraulic lines at the control valve fittings. Cap each line as removed to prevent leakage.
4. Remove the bolt holding the bracket to the frame side rail. Remove the valve and bracket assembly.
5. Installation is the reverse of removal. Bleed the brakes and center the control valve as described in this chapter.

Centering the Valve

Whenever the hydraulic brake system is opened for repair or bleeding, the control valve will be in an off-center position, causing the instrument panel warning lamp to remain on. The control valve must be centered if the warning lamp is to function as designed.

1. Make sure the master cylinder fluid level is within 1/4 in. of the top of the reservoir divider. Top up if necessary.
2. Turn the ignition switch to the ACC or ON position.
3. Depress the brake pedal. This will cause the piston in the control valve to center itself, turning off the instrument panel warning lamp.
4. Turn the ignition switch OFF. Check brake operation and make sure the pedal is firm.

13

STOPLIGHT SWITCH REPLACEMENT

The stoplight switch is mounted on the brake pedal arm. See **Figure 49** (1983-1984) or **Figure 50** (1985-on).

1. Working in the cab, unplug the wiring harness connector at the stoplight switch.
2. Remove the hairpin clip holding the stoplight switch on the brake pedal arm.
3. Slide the stoplight switch and master cylinder or booster pushrod off the brake pedal arm. Disengage the switch from the pushrod and remove from the vehicle.

4. Installation is the reverse of removal. Make sure bushings and washers are properly positioned. Make sure the wire harness is properly routed and will travel the full pedal stroke without binding.

PARKING BRAKE CABLES

All models use a foot-operated parking brake assembly. A cable connected to the parking brake pedal is routed to the equalizer. Separate cables connect the equalizer assembly to each rear wheel.

Front Cable Replacement

1. Securely block both front wheels so the truck will not roll in either direction.
2. Raise the vehicle with a jack and place it on jackstands.
3. Back off the equalizer nut (A, **Figure 35**). Remove the front cable slug from the tension limiter (B, **Figure 35**).
4. Remove the cable from the frame bracket.
5. Remove the jackstands and lower the vehicle to the ground.
6. Disconnect the cable from the parking brake control assembly (**Figure 51**).
7. Attach a wire or cord to the control assembly end of the cable and pull it from the vehicle.
8. Transfer the wire or cord to the new cable. Route the cable through the firewall, then remove the wire or cord and connect the end of the cable to the control assembly.
9. Thread the cable through the frame bracket and connect it to the equalizer.
10. Adjust the parking brake as described in this chapter.

Rear Cable Replacement

1. Securely block both front wheels so the truck will not roll in either direction.
2. Remove the wheel cover or hub ornament, if so equipped, and loosen the wheel lug nuts.
3. Raise the vehicle with a jack and place it on jackstands.
4. Remove the wheel/tire assembly. Remove the brake drum as described in this chapter.
5. Remove the parking brake tension limiter.
6. Remove the threaded rod locknut and disconnect the cable from the equalizer.
7. Compress the prongs holding the cable housing to the frame bracket (**Figure 52**), then remove the cable and housing from the bracket.

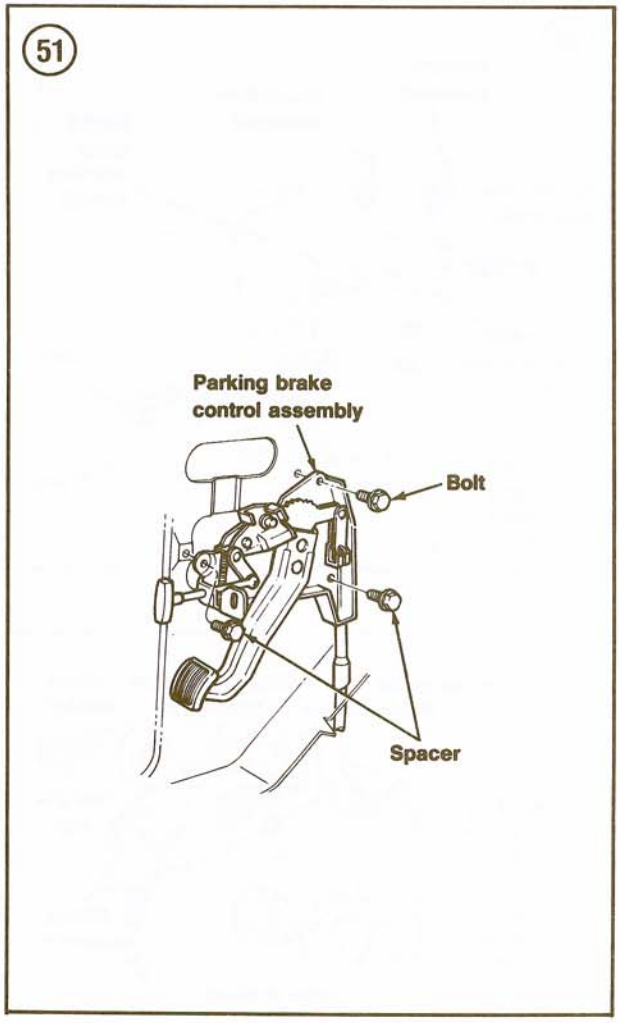

8. Compress the prongs on the cable retainer at the front of the brake assembly and push the retainer from the brake backing plate hole.
9. Lift the cable from the lever slot and push it through the brake backing plate hole. Remove the cable.
10. Installation is the reverse of removal. Adjust the parking brake as described in this chapter.

Control Assembly Removal/Installation

1. Securely block both rear wheels so the truck will not roll in either direction. Raise the front of the vehicle with a jack and place it on jackstands.
2. Loosen the adjusting nut at the equalizer.
3. Working in the cab, remove the bolts holding the control assembly to the cowl side panel. See **Figure 51**.

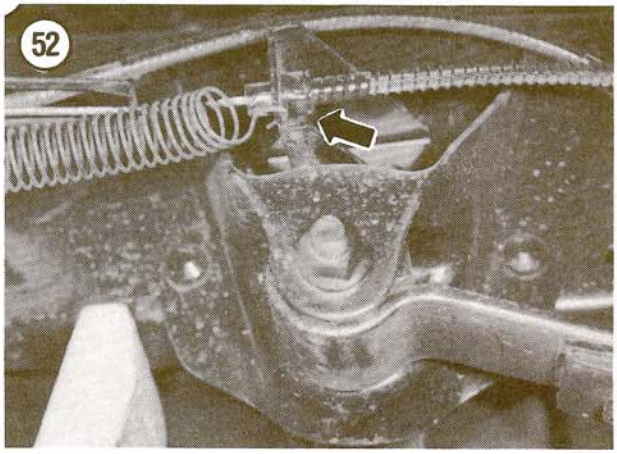

4. Disconnect the parking brake cable from the control assembly. Remove the control assembly.
5. Installation is the reverse of removal. Tighten the control assembly bolts to specifications (**Table 1**). Check and adjust parking brake tension, if required.

BRAKE PEDAL

The brake system on all vehicles is designed to provide a full stroke of the master cylinder whenever the brake pedal is fully depressed. Brake pedal adjustments are not required.

Table 1 TIGHTENING TORQUES

Fastener	in.-lb.	ft.-lb.	N•m
Caliper pin nut	32-47		3.6-5.3
Control assembly bolt		12-18	17-24
Master cylinder nut		13-25	18-33
Pressure differential control valve bolt			
1983-1984		24-36	32-48
1985-on		13-16	17-22
Splash shield bolt		13-19	18-25
Vacuum booster nut		13-25	18-33
Vacuum pump			
Adjustment nut		15-20	20-27
Bracket-to-engine		31-42	42-57
Pivot bolt		15-20	20-27
Pump-to-plate bolts		15-20	15-20
Support bracket bolt		50-65	65-90
Wheel lug nuts		85-115	115-155

CHAPTER FOURTEEN

BODY

This chapter provides service procedures for the grille, stone deflector, bumpers, hood, fenders, doors, door and vent windows, Ranger tailgate, Bronco II liftgate, seats and instrument panel. No special tools are required for any of these procedures. Other body repairs require special skills and tools and should be left to a Ford dealer or body shop.

RADIATOR GRILLE REMOVAL/INSTALLATION

Refer to **Figure 1** for this procedure.

1. Remove the parking lamps. See Chapter Eight.
2. Reach through each parking lamp opening and remove the screw holding the grille mounting bracket to the radiator support.
3. Remove 2 screws from the center of the grille.
4. Remove the 6 screws at the top of the grille which hold it to the radiator support.
5. Remove the 2 screws in the center of the grille which hold it to the radiator support.
6. Remove the grille from the vehicle.
7. Installation is the reverse of removal.

STONE DEFLECTOR REMOVAL/INSTALLATION

Refer to **Figure 1** for this procedure.

1. Remove the 2 screws on each side holding the deflector to the front of the vehicle.
2. Remove the 2 screws from the center of the deflector which hold it to the radiator grille support.
3. Remove the deflector from the vehicle.
4. Installation is the reverse of removal. Tighten the 2 deflector-to-grille support screws to 12-19 in.-lb. (1.3-2.2 N•m). Tighten the 4 deflector mounting screws to 5-8 ft.-lb. (7-11 N•m).

FRONT BUMPER REMOVAL/INSTALLATION

Refer to **Figure 2** for this procedure.

1. Set the parking brake. Securely block both rear wheels so the truck will not roll in either direction. Raise the front of the vehicle with a jack and place it on jackstands.
2. Support the front bumper with a jack or wooden blocks.
3. Remove the 2 nut/washer assemblies holding the bumper to the frame on each side.

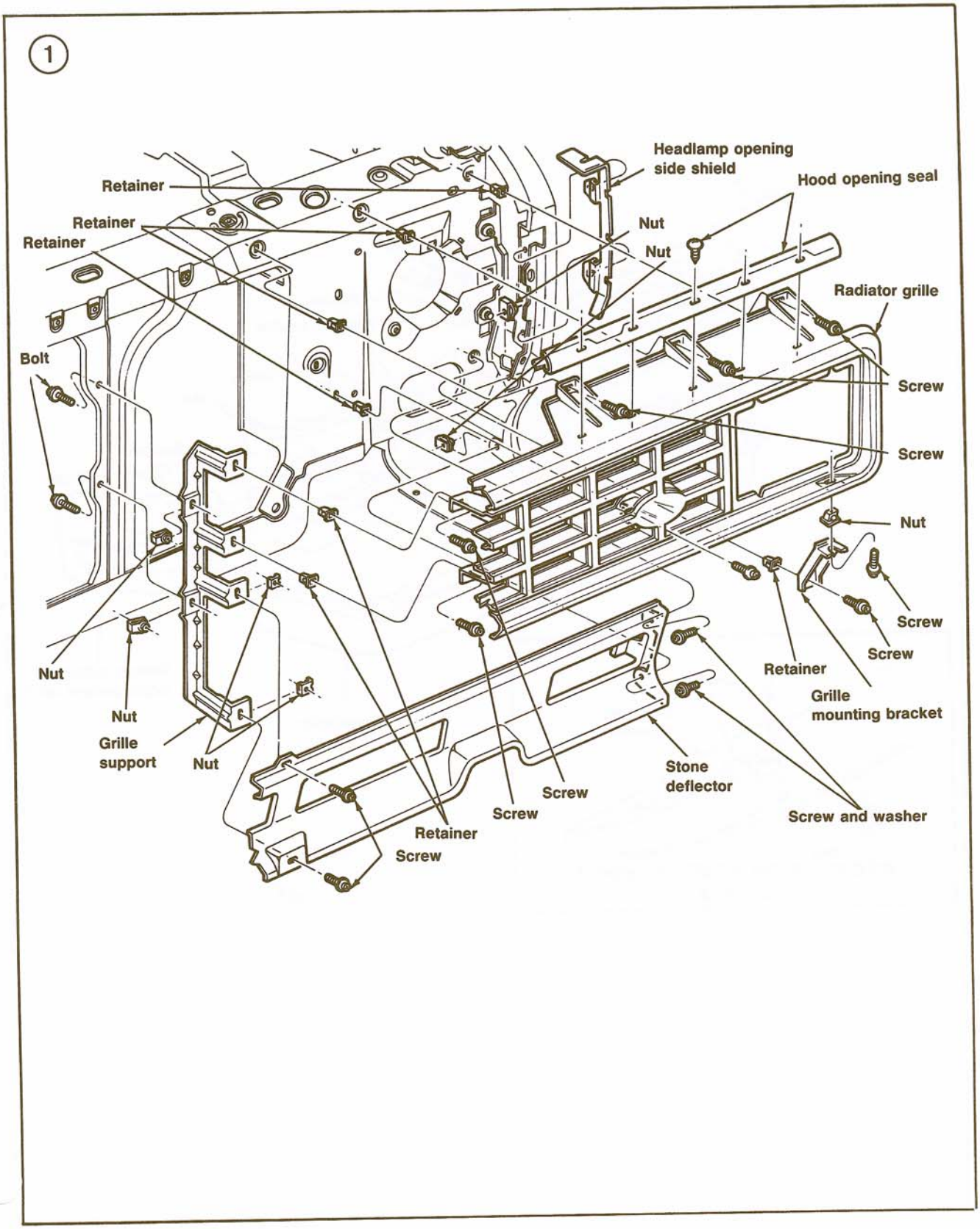
1
Headlamp opening side shield
Hood opening seal
Retainer
Retainer
Retainer
Nut
Nut
Radiator grille
Bolt
Screw
Screw
Nut
Screw
Screw
Retainer
Grille mounting bracket
Nut
Nut
Grille support
Nut
Stone deflector
Screw
Screw
Retainer
Screw
Screw and washer

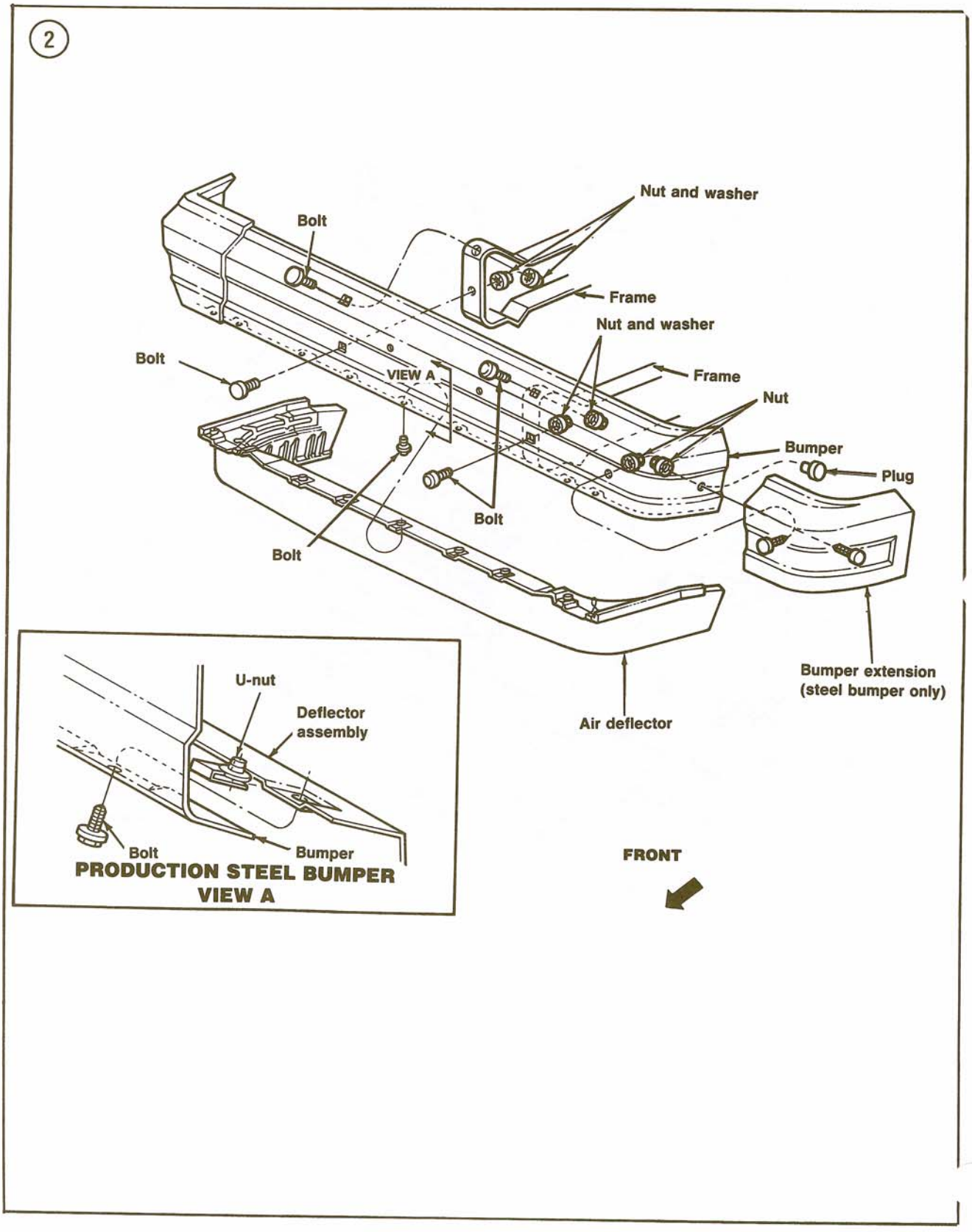
2
Nut and washer
Bolt
Frame
Nut and washer
Bolt
VIEW A
Frame
Nut
Bumper
Plug
Bolt
Bolt
Bumper extension
(steel bumper only)
Air deflector
FRONT
U-nut
Deflector
assembly
Bolt
Bumper
PRODUCTION STEEL BUMPER
VIEW A

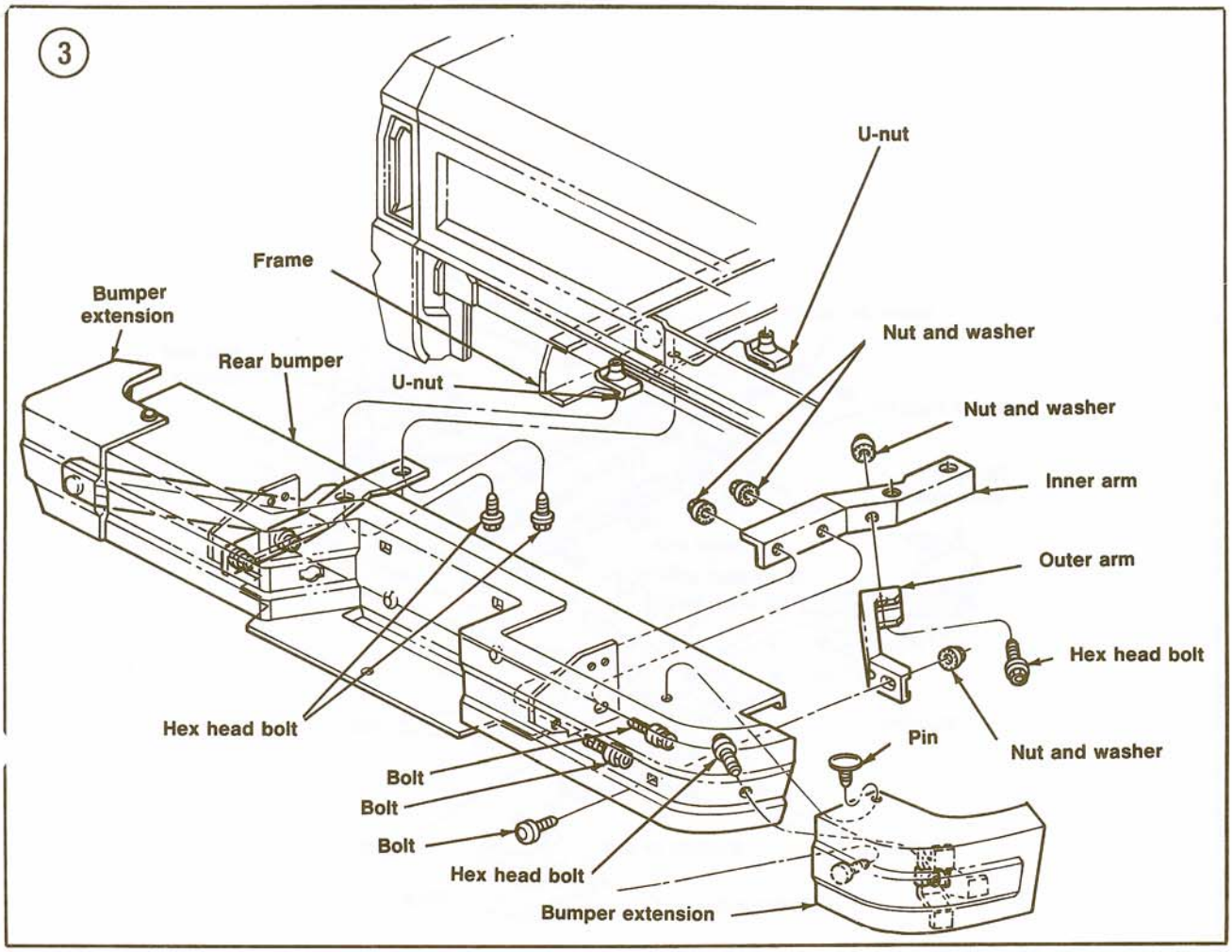

4. Remove the bumper. Retrieve the plastic insulators installed between the frame and bumper.
5. If installing a new bumper, pry the cap (plastic or metal) off the bolt heads. Transfer the bolts and plastic washers to the new bumper and install the caps. Unbolt the bumper extensions (if so equipped) and license plate hanger and install them on the new bumper.
6. Installation is the reverse of removal. Tighten the attaching nuts to 17-23 ft.-lb. (23-31 N•m). Tighten the extension nuts to 5-8 ft.-lb. (7-11 N•m).

REAR BUMPER REMOVAL/INSTALLATION

Refer to **Figure 3** (Ranger) or **Figure 4** (Bronco II) for this procedure.

1. Set the parking brake. Securely block both rear wheels so the truck will not roll in either direction. Raise the front of the vehicle with a jack and place it on jackstands.
2. Support the rear bumper with a jack or wooden blocks.
3. Remove the bumper bracket-to-frame attaching bolts.
4. Remove the bumper and brackets from the vehicle.
5. If installing a new bumper, transfer the brackets and bumper extensions (if so equipped) to the new bumper. Tighten extension fasteners to 6-8 ft.-lb. (7-11 N•m).
6. Installation is the reverse of removal.
   a. Ranger—Tighten the bumper-to-outer arm nut to 26-40 ft.-lb. (35-55 N•m). Tighten all other fasteners to 92-136 ft.-lb. (125-185 N•m).

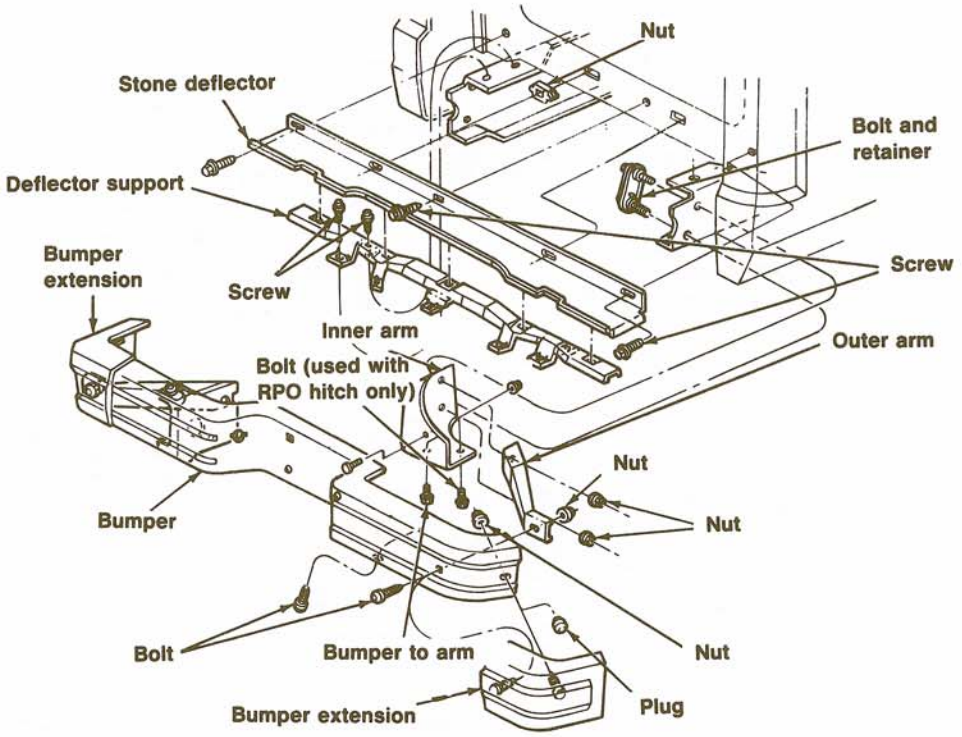

b. Bronco II—Tighten the bumper-to-outer arm nut to 17-22 ft.-lb. (23-31 N•m). Tighten bracket-to-frame fasteners to 74-100 ft.-lb. (100-136 N•m).

HOOD

Adjustment

Refer to **Figure 5** for this procedure.

1. To move the hood forward, to the rear or from side-to-side, loosen the hood-to-hinge bolts at each side. Align the hood as necessary, then tighten the bolts to 62-97 in.-lb. (7-11 N•m).
2. To raise or lower the rear of the hood, loosen the hood-to-cowl bolts. Raise or lower the hood hinges as required to properly position the hood. Tighten the bolts to 62-97 in.-lb. (7-11 N•m).
3. To raise or lower the front of the hood, loosen the hood bumper locknuts located on either side of the bumper support (**Figure 6**). Turn the bumpers to raise or lower them. Once properly adjusted, the hood should be tight when latched. If the hood rattles or moves downward when hand pressure is applied, readjust the bumpers higher. If the hood will not latch properly, readjust the bumpers lower.

5

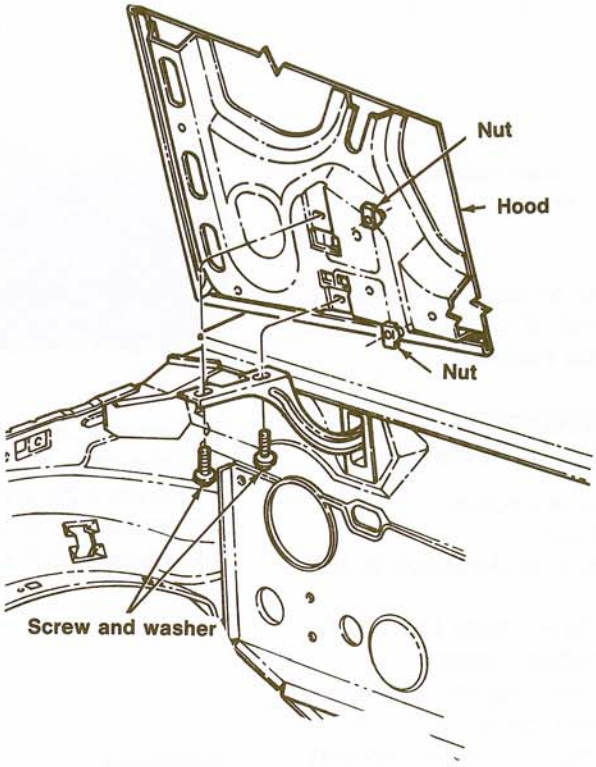

6

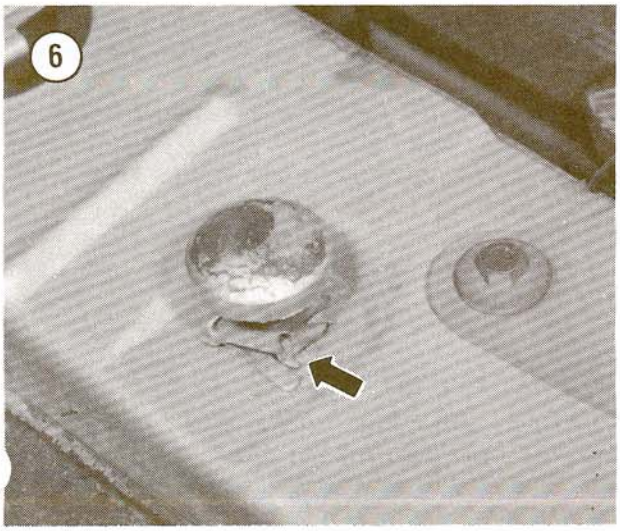

Once adjustment is correct, tighten the bumper locknuts.

14

Removal/Installation

This procedure requires the help of an assistant.

1. Disconnect the underhood lamp wire, if so equipped.
2. Use a soft lead pencil to make alignment marks around the hinges directly on the hood. The marks will make installation easier.
3. Place a thick layer of rags beneath the trailing edge of the hood to protect the paint.
4. Place a protective cover over the windshield. Install a block of wood between the hood and windshield to prevent a sudden rearward movement of the hood.

5. While an assistant supports one side of the hood, remove the hinge-to-hood screws (**Figure 7**).
6. Support your side of the hood while the assistant removes the other hinge-to-hood screws. Lift the hood off and place it out of the way.

NOTE

Do not place the hood flat on the floor or ground. Lean it up against a wall or other solid object to prevent the possibility of damage.

7. Installation is the reverse of removal. Align the marks made before removal. If necessary, adjust the hood as described in this chapter.

FRONT FENDER REMOVAL/INSTALLATION

Refer to **Figure 8** for this procedure.
1. Open and support the hood.
2. Remove the radiator grille as described in this chapter.
3. Remove the upper and lower bolts holding the front of the fender to the radiator support.
4. Remove the single bolt holding the rear lower end of the fender to the lower corner of the cab.
5. Working inside the cab, remove the bolt holding the rear of the fender to the cowl.
6. Remove the screws around the wheel opening that hold the fender apron in place.
7. Remove the bolt on the top of the apron holding it to the fender.
8A. On the left fender, remove the hood latch cable.
8B. On the right fender, remove the wiring harness.
9. If a radio antenna is installed in the fender, disconnect the antenna lead.
10. Remove the fender from the vehicle.
11. Installation is the reverse of removal. Tighten the rear bottom bolt to 12-17 ft.-lb. (17-24 N•m). Tighten all other bolts to 5-8 ft.-lb. (7-11 N•m).

FENDER APRON REMOVAL/INSTALLATION

Refer to **Figure 9** for this procedure.
1. Remove the front fender as described in this chapter.
2. Remove 2 screws holding the apron to the inner body.

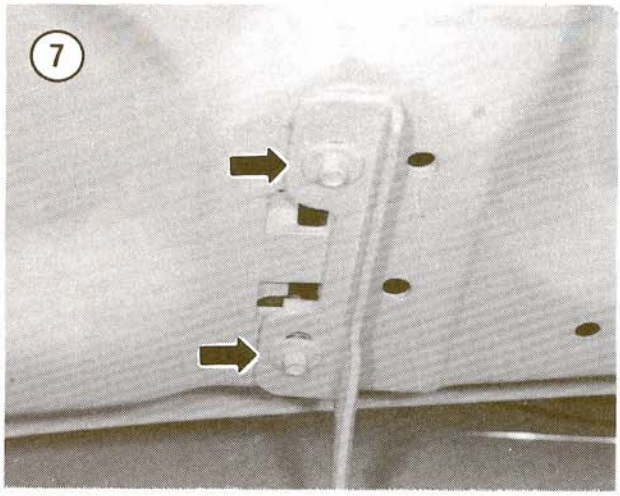

3. Remove 2 screws holding the apron to the radiator support.
4. Remove the fender apron.
5. Installation is the reverse of removal. Tighten all fasteners to 7-11 ft.-lb. (9-14 N•m).

DOORS

Alignment

Refer to **Figure 10** for this procedure.
1. Determine which hinge screws must be loosened to move the door in the desired direction.
2. Loosen the hinge screws sufficiently to permit door movement with a padded pry bar.
3. Move the door the estimated distance in the desired direction. Tighten the hinge screws and check the door fit to make sure there is no binding or interference with adjacent panels.
4. Repeat Step 2 and Step 3 as required to align the door for a proper fit.
5. When alignment is correct, tighten hinge screws to 14-24 ft.-lb. (19-32 N•m).
6. Check striker plate alignment to make sure the door closes properly.

Removal/Installation

1. Tape the door and body pillars with cloth-backed body tape.
2. Remove the upper and lower hinge access hole cover plates (if so equipped). Mark the location of

8

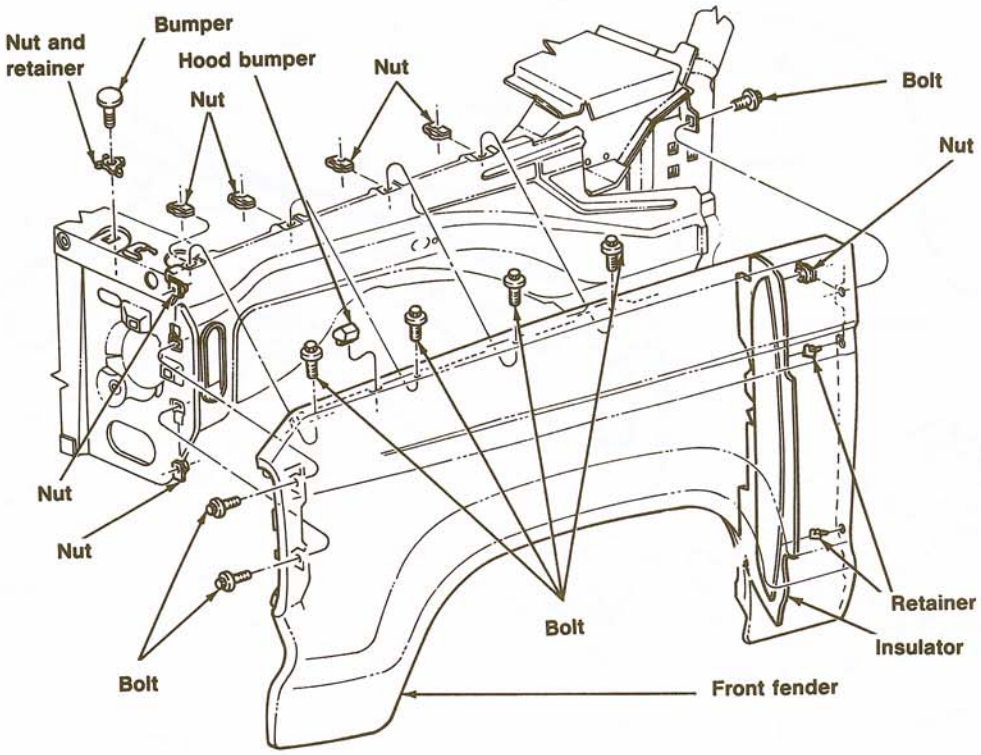
Nut and retainer
Bumper
Hood bumper
Nut
Nut
Bolt
Nut
Nut
Nut
Bolt
Bolt
Retainer
Insulator
Front fender

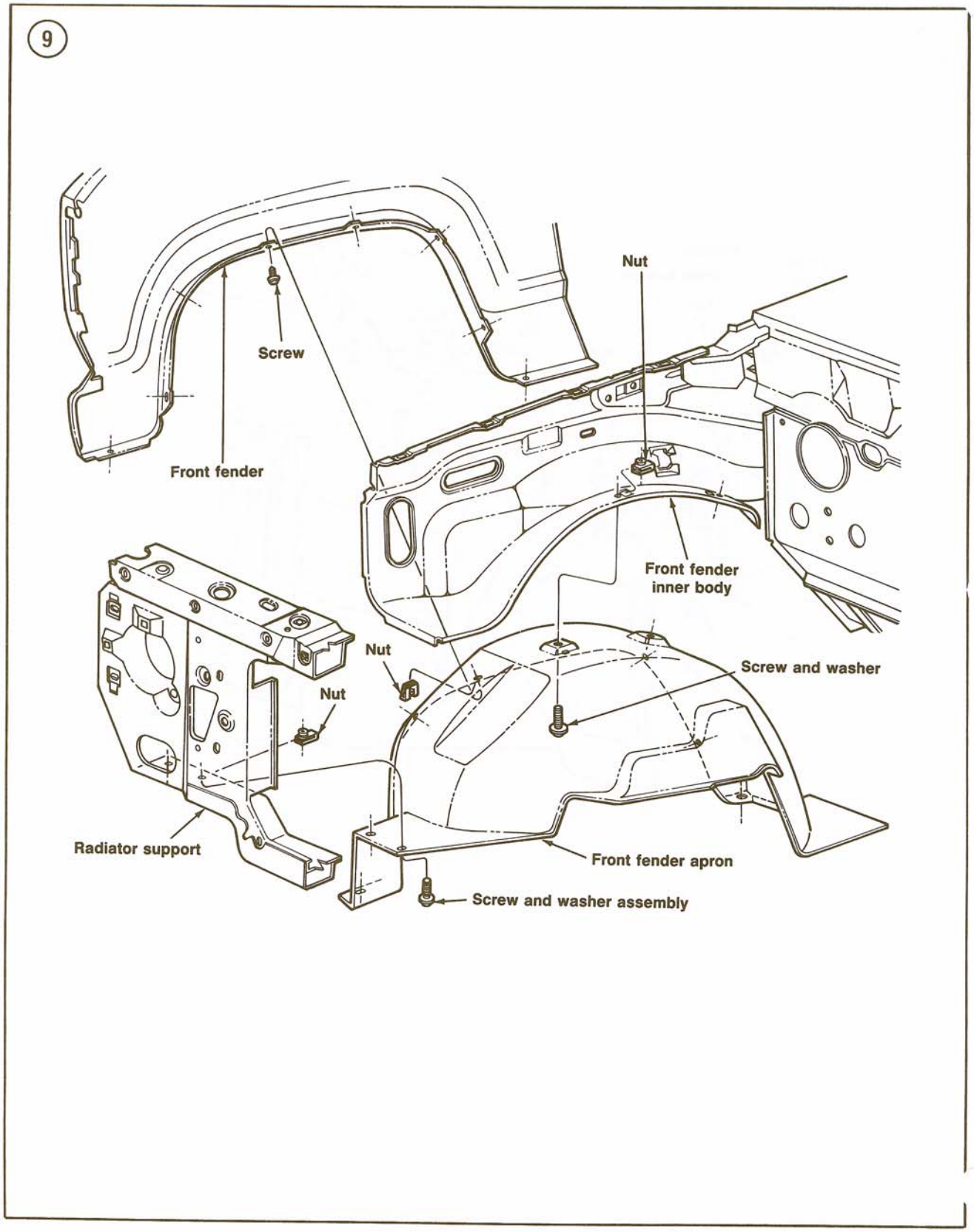
9
Screw
Front fender
Nut
Front fender inner body
Nut
Nut
Screw and washer
Radiator support
Front fender apron
Screw and washer assembly

10

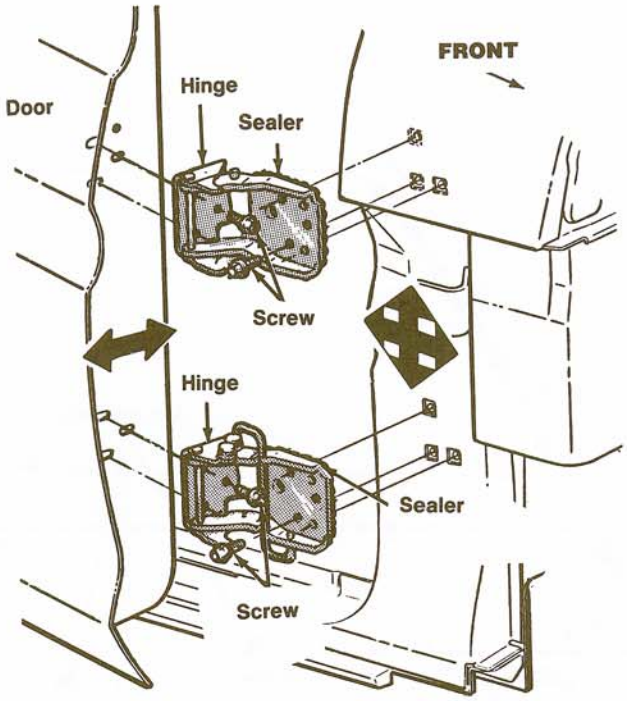

11

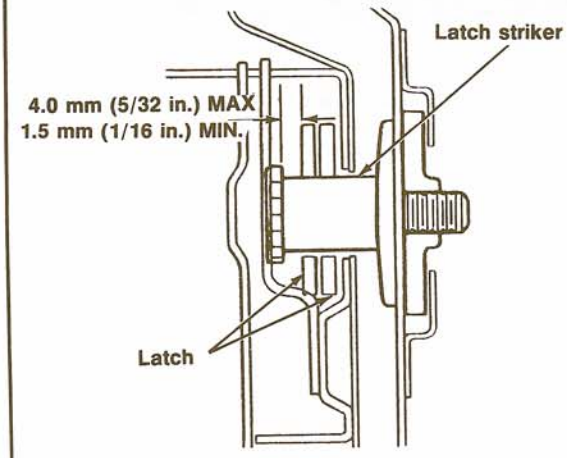

the hinge on the door and body with a soft lead pencil.

3. Remove the door-to-lower hinge attaching screws.

4. Support the door. Remove the door-to-upper hinge attaching screws.

5. Slide the door off its hinges and remove it from the vehicle.

6. Installation is the reverse of removal. Tighten all hinge screws to 14-24 ft.-lb. (19-32 N•m). Open and close the door to check latch striker adjustment. Adjust, if necessary, as described in this chapter.

Latch Striker Adjustment

The latch striker pin can be adjusted up and down or from side-to-side. The latch striker should not be adjusted to correct door sag. Shim the striker to obtain the clearance between the latch striker and latch shown in **Figure 11**. Do not use more than 2 shims.

(12)

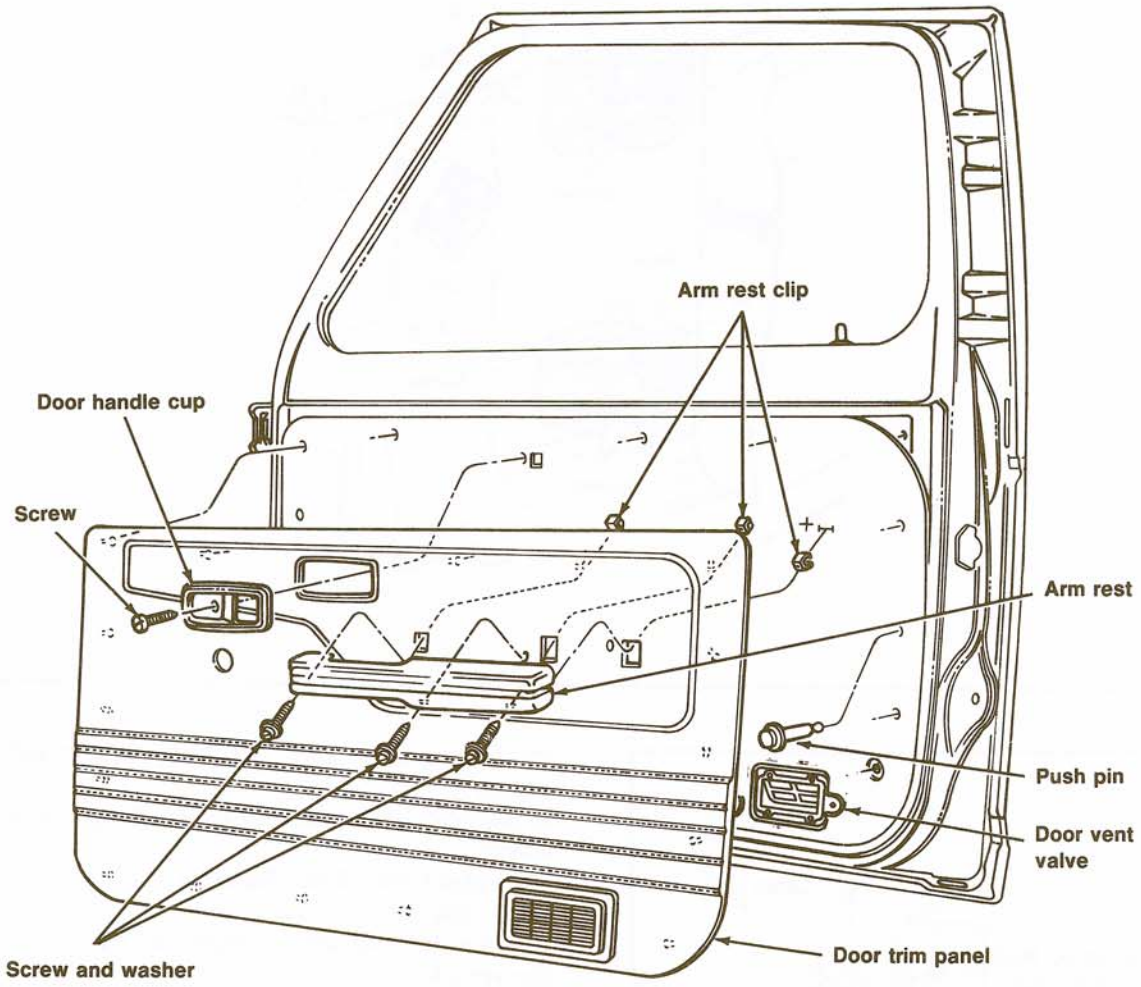
Arm rest clip
Door handle cup
Screw
Arm rest
Push pin
Door vent valve
Door trim panel
Screw and washer

13

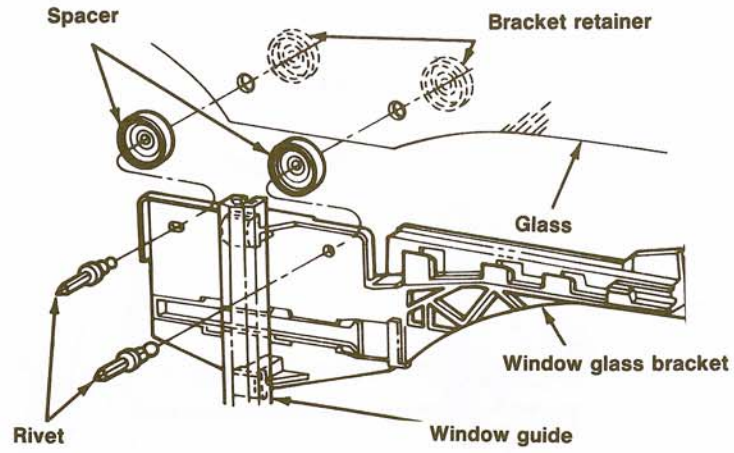

1. Clean the latch jaws and striker area, then apply a thin coat of dark grease to the latch striker.
2. Open and close the door until a measurable pattern can be seen in the fresh grease.
3. Loosen the striker with tool part No. D79P-2100-T or equivalent.
4. Move the striker assembly as required to obtain a flush fit at the door and body.
5. Tighten the striker with tool part No. D79P-2100-T or equivalent.

Trim Panel
Removal/Installation

The one-piece trim panel is attached to the door inner panel by clips. The armrest and door handle cup are fastened in place with screws after the trim panel is installed. **Figure 12** shows the standard trim panel; the optional trim panel is similar.
1. Remove the 3 screws holding the armrest to the door inner panel. Remove the armrest.
2. Remove the screw holding the door handle cup in place. Remove the cup.
3. Remove the screw holding the window regulator handle in place. Remove the handle and washer.
4. Remove the door lock control, if so equipped.
5. Use a putty knife, a wide-blade screwdriver or a door panel trim stick to carefully pry the trim panel retaining clips from the edges of the inner door panel.
6. Installation is the reverse of removal. Make sure the armrest retaining clips are properly positioned on the inner door panel.

Window Removal

The glass is retained to the window regulator bracket with rivets which must be drilled out for glass removal.
1. Remove the door trim panel as described in this chapter.
2. Carefully remove the water shield with a putty knife.
3. Temporarily reinstall the window regulator handle and lower the glass far enough to provide access to the bracket rivets.
4. Use a drift punch to remove the center pin from the rivets. See **Figure 13**.
5. Drill out each rivet with a 1/4 in. drill bit.
6. Remove the glass through the door belt opening. Remove the spacers.

Window Installation

1. Install the spacer and retainer in the glass retainer holes.
2. Fit the glass into the door through the door belt opening.
3. Hold the glass against the bracket and align the retaining holes.
4. Install new retaining rivets.
5. Temporarily reinstall the window regulator handle and cycle the glass up and down to check its operation.
6. Remove the window regulator handle and install the water shield and door trim panel as described in this chapter.

14

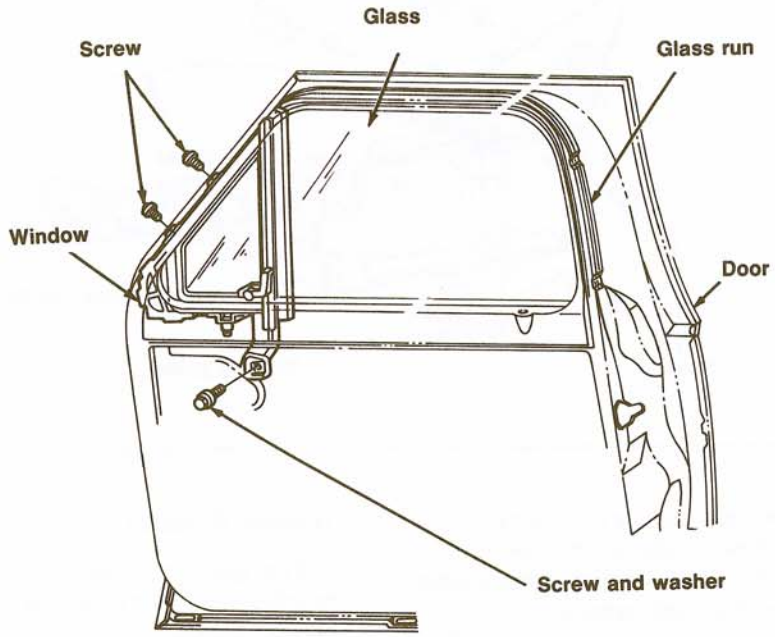

Vent Window Glass Removal/Installation

1. Open the vent window.
2. Push the glass out of the glass frame.
3. Clean any sealer and tape residue from the frame.
4. Apply fresh sealer to the glass frame.
5. Slide the new glass and tape into the frame.
6. Trim any excess tape from around the glass frame.
7. Clean the glass and frame.
8. Close the vent window.

Vent Window Assembly Removal/Installation

Refer to **Figure 14** for this procedure.

1. Remove the door trim panel as described in this chapter.
2. Remove the screw/washer holding the division bar to the door inner panel.
3. Remove the 2 screws holding the vent assembly to the front edge of the door.
4. Temporarily reinstall the window regulator handle and lower the window glass as far as it will go.
5. Pull the glass run partially out of the door run retainer in the division bar area.
6. Tilt the vent window and division bar assembly toward the back of the door. Remove the vent window assembly from the door.
7. Remove the 2 upper pivot-to-vent frame screws.
8. Remove the nut and tension spring from the vent window lower pivot.
9. Separate the vent glass retainer and pivot stops from the frame and weatherstrip assembly.
10. Installation is the reverse of removal. Tighte all fasteners to 62-97 in.-lb. (7-11 N•m).

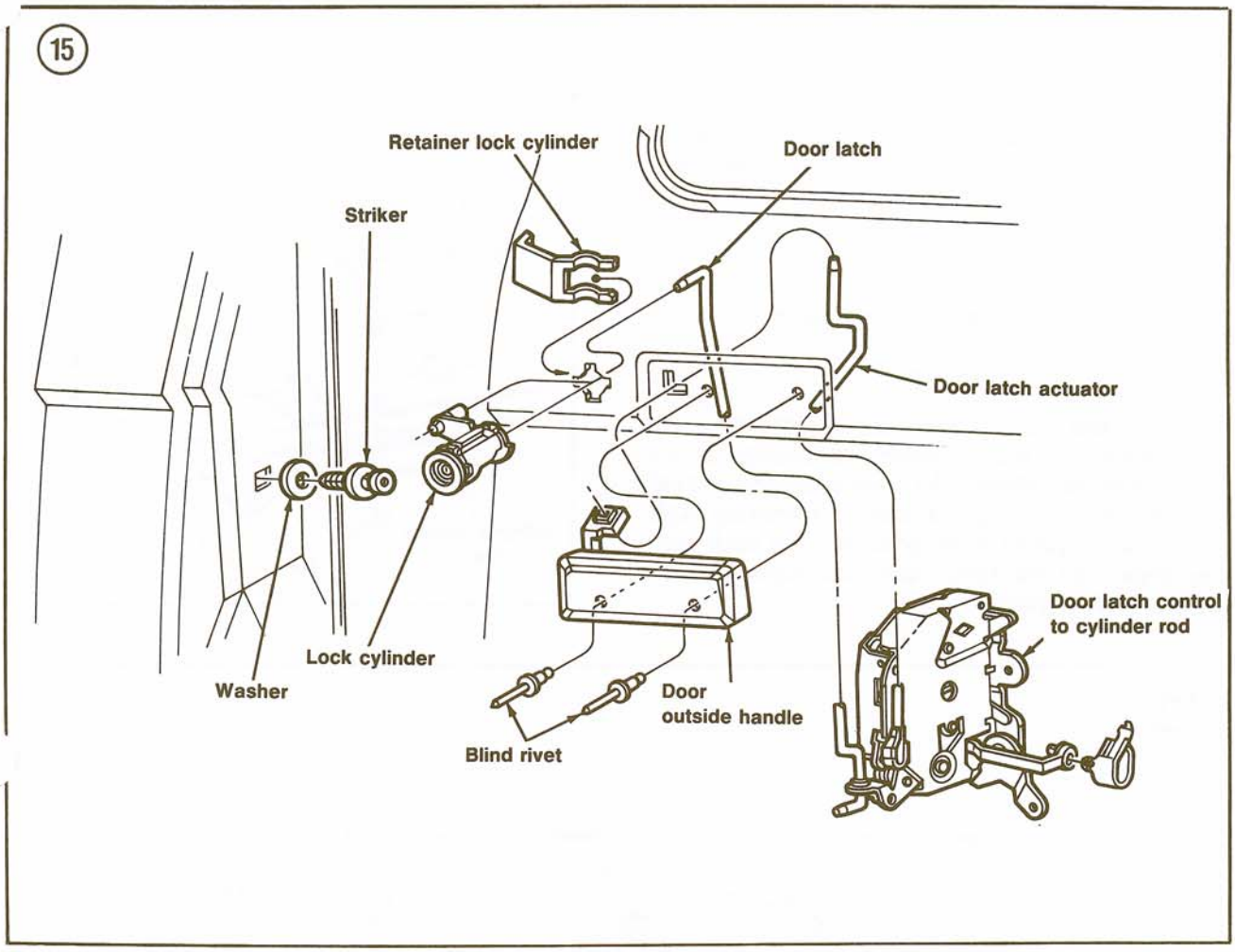

DOOR LOCK REPLACEMENT

Refer to **Figure 15** for this procedure.

1. Raise the door window to the fully up position.
2. Remove the door trim panel and water shield as described in this chapter.
3. Disconnect the latch control-to-cylinder rod from the lock control retainer clip.

CAUTION

Wear gloves to prevent injury when removing the cylinder retainer in Step 4.

4. Slide the lock cylinder retainer off the lock cylinder. Remove the retainer and lock cylinder from the door.

Installation is the reverse of removal. Lubricate the lock with WD-40 or equivalent spray lubricant.

TAILGATE REMOVAL/INSTALLATION

1. Remove the latch bracket nut on each side of the tailgate.
2. Lift the tailgate off the right-hand hinge, then off the left-hand hinge.
3. Remove the tailgate.
4. Installation is the reverse of removal. Tighten the latch bracket nuts to 6-11 ft.-lb. (8-15 N•m).

LIFTGATE

Adjustment

The Bronco II liftgate can be adjusted using Step 1 or Step 2 of *Hood Adjustment* in this chapter.

Removal/Installation

1. Open the liftgate door.

2. Remove the upper rear center garnish moulding.
3. Support the door and disconnect the gas cylinder assist rod assemblies.
4. Move the headliner as required and remove the hinge-to-header panel nut (**Figure 16**) on each side. Remove the liftgate with hinges attached.
5. Installation is the reverse of removal. Tighten hinge-to-header panel nut to 12-19 ft.-lb. (17-27 N•m). If hinges are removed from liftgate, tighten to 5-8 ft.-lb. (7-11 N•m) when reinstalled.

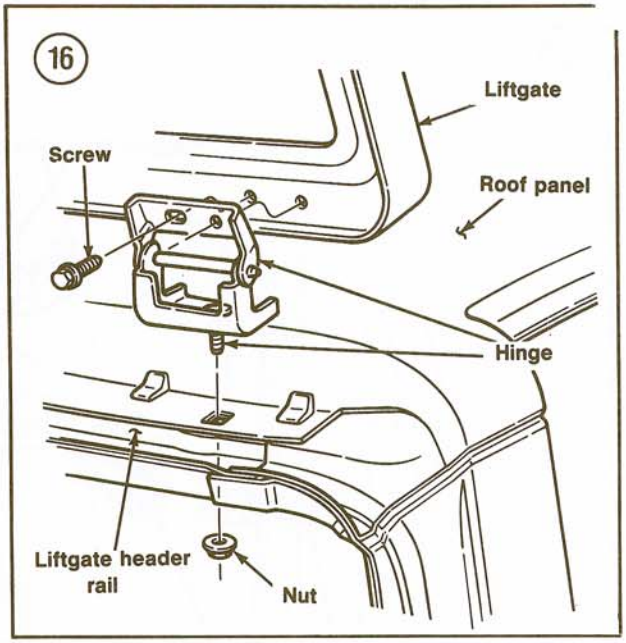

SEATS

Bench and bucket seats are secured to track assemblies. The track assembly is fastened to the floorpan of the vehicle. The same procedure is used to remove either type of seat. If removing both bucket seats, perform the procedure on each seat. See **Figure 17** for bench seat and **Figure 18** for bucket seats (typical).

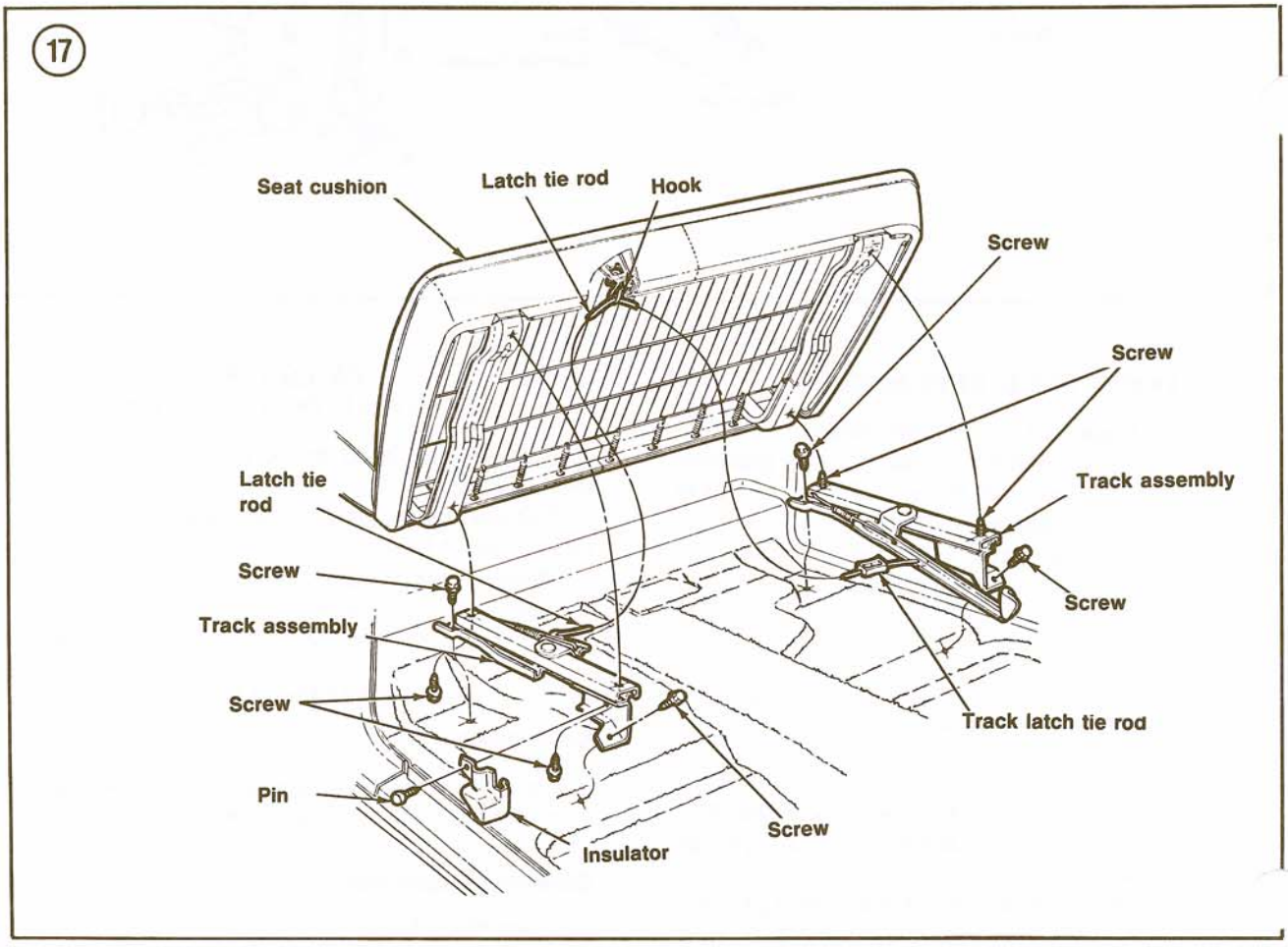

Removal/Installation

1. Remove the seat track insulators. On bench seats, remove only the right-hand insulator.
2. Remove the 2 track-to-floor retaining screws at each side of the seat. Remove the seat and track assembly from the vehicle.
3. To separate the track assembly from the seat, invert the seat on a clean workbench.
4. Disconnect the track latch tie rod assembly.
5. Remove the 2 track-to-seat cushion screws at each side of the seat. Separate the track assembly from the seat.
6. Installation is the reverse of removal. Tighten all fasteners to 9-18 ft.-lb. (12-24 N•m).

Seat Recliner Assembly
Removal/Installation

The recliner assembly used on bucket seats is a modular assembly and cannot be serviced. If the recliner does not function properly, it must be removed and a new assembly installed.

1. Remove the seat as described in this chapter.
2. Remove the seat back pivot cover. Remove the screws holding the seat back to the seat cushion.
3. Remove the 2 screws holding the recliner assembly to the seat back frame.
4. Remove the 2 screws holding the recliner assembly to the seat cushion frame.
5. Remove the recliner assembly.
6. Installation is the reverse of removal. Tighten the recliner-to-seat back frame and seat pivot screws to 15-20 ft.-lb. (19-27 N•m). Tighten the recliner-to-seat cushion screws to 22-32 ft.-lb. (30-43 N•m).

INSTRUMENT PANEL REMOVAL/INSTALLATION

This procedure covers removal of the entire instrument panel assembly. To remove just the gauge cluster, see *Instruments*, Chapter Eight. Refer to **Figure 19** for this procedure.

1. Disconnect the negative battery cable(s).

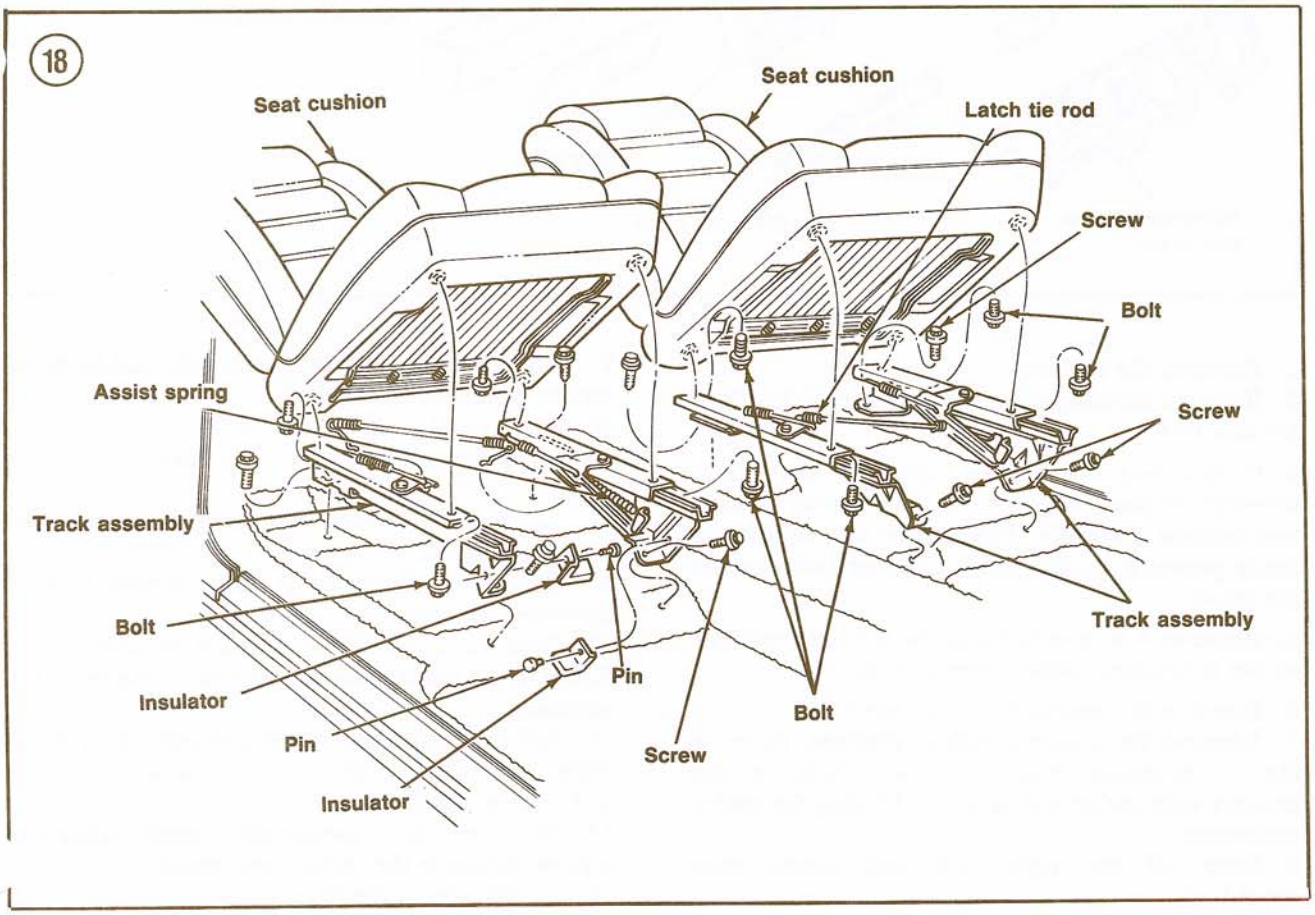

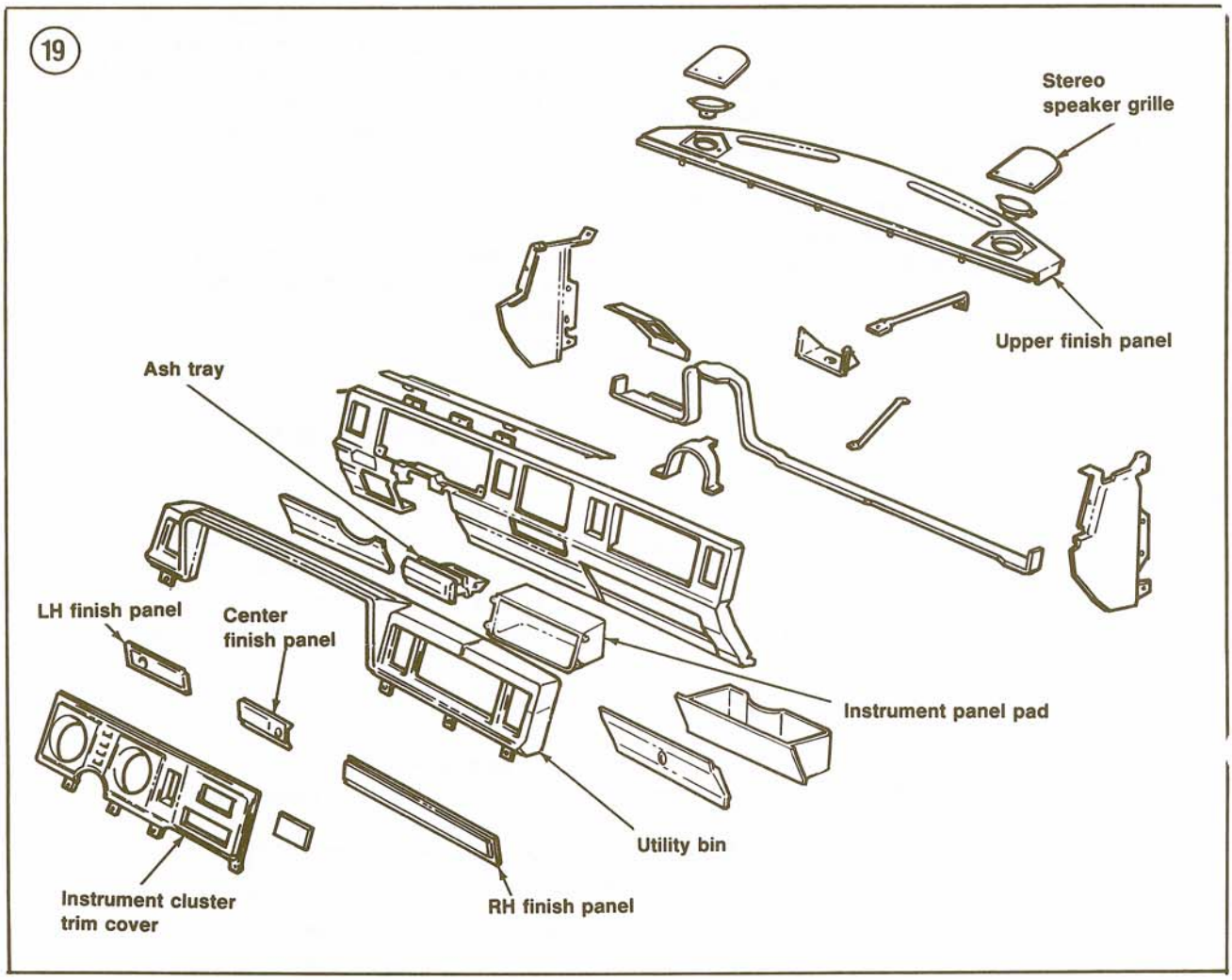

2. Remove the ash tray.
3. Remove the snap-off trim panels on each side of the ash tray.
4. If equipped with an auxiliary fuel tank, fit a screwdriver blade between the knob spring retainer and control assembly. Pull on the screwdriver to apply pressure on the spring retainer and remove the knob.
5. Remove 4 screws holding the ash tray retainer to the instrument panel. Remove the retainer.
6. Remove the headlight switch knob.
7. Remove the cigarette lighter element. Remove the 2 mounting bracket screws. Remove the bracket with socket and retainer. Unplug the socket connector.
8. Snap off the right, left and center trim mouldings.
9. Remove the 2 steering column shroud-to-panel screws. Remove the shroud.
10. Remove 4 upper and 4 lower instrument cluster finish panel screws. Remove the finish panel.
11. Remove 4 lower instrument panel pad retaining screws.
12. Remove 2 upper finish panel screws at each defroster opening.
13. Remove 2 screws from each speaker grille. Remove the speaker mounting screws. Remove the speakers.
14. Pull the instrument panel pad and upper finish panel assembly to the rear and away from the instrument panel.
15. Remove the instrument panel attaching screws. Remove the instrument panel.
16. Installation is the reverse of removal.

INDEX

A

Air cleaner (diesel) 176-177
Air cleaner (gasoline) 171-176
  Duct and valve assembly replacement (carburetted engines) 175
  Filter replacement 174
  Sensor replacement 176
  Temperature sensor operational test (4-cylinder carburetted engines) 175
Air conditioning 240
Aisan carburetor (4-cylinder) 189-192
Auxiliary shaft 112
Axle, front drive 4-WD 403-404
Axle, i-beam 2-WD 347-351
Axle pivot bracket removal/installation 2-wheel drive 351
Axle pivot right-hand bracket 4-wheel drive 404-405

B

Ball joint replacement 2-wheel drive 347
Ball-joint replacement 4-wheel drive 402-403
Battery 246-252
  Battery cables 247
  Care and inspection 247-248
  Charging 251
  Jump starting 251-252
  Maintenance-free battery testing 249-250
  Open circuit voltage test (maintenance-free batteries) 250
  Replacement batteries 250
  Safety precautions 250-251
  Unsealed battery testing 248-250
Belts, drive 234
Blinkers 278
Block, cylinder 128
Block, cylinder 164-165
Body 450-466
  Alignment 456
  Bumper, front 450-453
  Door lock replacement 463
  Doors 456-463
  Fender apron 456
  Fender, front 456
  Grille, Radiator 450
  Hood 454-456
  Instrument panel 465-466
  Latch striker adjustment 459-461
  Liftgate 463-464
  Rear bumper 453-454
  Removal/installation 456-459
  Seats 464-465
  Stone deflector 450
  Tailgate removal and installation 463
  Trim panel removal and installation 461
  Vent window 462
  Window 461
Borg warner 13-50 electronic shift transfer case 320-329
  Planetary gear set disassembly/assembly 326-327
  Removal/installation 321-322
  Transfer case assembly 327-329
  Transfer case disassembly 322-326
Brake adjustment 437-438
Brake bleeding 440-442
Brake drum removal/installation (drum brakes) 432-433
Brake pedal 449
Brake vacuum booster, power 442-449
Brakes, front disc 420-432
  Caliper 428-430
  Hub, rotor and splash shield installation 432
  Hub, rotor and splash shield removal 430-431
  Pad inspection (off vehicle) 428
  Pad inspection (on vehicle) 423
  Pad replacement 423-428
  Rotor inspection 431-432
Brakes, rear drum 432-433
  Brake drum removal and installation 432-433
  Drum and shoe inspection (all models) 433-434
  Shoe 434-436
  Wheel cylinder 436
Bulbs 263-265
Bumper, ... 450-453

C

Caliper overhaul (disc brakes) 428-430
Caliper removal (disc brakes) 428
Camshaft 117-119, 151-153
Camshaft belt 108-111
Camshaft belt outer cover 108
Carburetor (4-cylinder) 178-192
  Assembly 192
  Electric fuel pump test 186-187
  Float level adjustment 188
  Inspection and cleaning 187
  Mechanical fuel bowl vent adjustment 188
Carburetor (2.8L V6) 192-196
Catalytic converter 217
Charging system 252-255
Circuit breakers 274-277
Circuit protection 274-276
Clutch
  1983-1985 285
  1986 286
  Housing 287-289
  Hydraulic system (1983-1985) 280-282
  Hydraulic system (1986) 282-283
  Interlock switch 286-287
  Operation 278-282
  Pilot bearing 287
Compression test 75
Coolant temperature switch 269-270
Cooling system 218-222
Core plugs 129, 165
Crankshaft 123-124, 160-162
Crankshaft pulley 147
Cylinder head 154-156

D

Differential 387-390
Distributor cap/wires/rotor 78-79
Door lock replacement 463
Doors 456-463
Drive plate 126, 163-164

Drive shafts 377-387
Constant velocity (CV) joint service 385-387
Installation 380
Removal 379-380
Universal joint service, double cardan 383-385
Universal, single cardan service, joint 380-383
Drum and shoe inspection (all models) (drum brakes) 433-434

E

EGR valve 215
Emission control systems, gasoline engine 204-217
Catalytic converter 217
EGR valve 215
Emission maintenance warning (EMW) light system 215
Evaporative emission control system 209-211
Exhaust gas recirculation (EGR system) 214-215
Oxygen sensor, exhaust gas 216
Positive crankcase ventilation (PCV) system 212-213
System inspection 211-212
Thermactor system 213-214
Emission control systems, diesel engine 216
Emission maintenance warning (EMW) light system 215
Engine, 4-cylinder
Auxiliary shaft 112
Block, cylinder 128
Camshaft 117-119
Camshaft belt 108-111
Connecting rod bearing clearance measurement 122
Connecting rod inspection 122
Core plugs 129
Crankshaft 123-124
Cylinder head 115-117
Disassembly checklists 101
Drive plate 126
Flywheel 126
Identification 94
Installation, diesel 101
Installation, gasoline 97-98
Manifold, exhaust 107-108
Manifold inspection 108
Manifold, intake 103-107
Mounts, front 101-102
Oil pan 112-115
Oil pump 115
Pilot bearing 126-128
Piston clearance check 120
Piston/connecting rod assembly 119-123
Piston pin removal/installation 120
Piston ring fit and installation 121-122
Removal, diesel engine 99-100
Removal, gasoline 94-97
Removal/installation (carburetted engine) 103-104
Removal/installation (fuel injected engine) 104-107
Rocker arms and hydraulic lash adjuster 103
Seal, rear main bearing 124-126
Sprocket and front seal replacement 111-112
Support, rear engine 102
Valve cover 102-103
Valves and valve seats 119
Engine, V6
Block, cylinder 164-165
Camshaft 151-153
Connecting rod bearing clearance measurement 158-159
Connecting rod inspection 158
Core plugs 165
Crankshaft 160-162
Crankshaft pulley 147
Cylinder head 154-156
Disassembly checklists 141
Drive plate 163-164
Flywheel 163-164
Identification 138
Installation 140-141
Manifold inspection 146-147
Manifolds, intake and exhaust 143-146
Mounts, front 141-142
Removal 139-140
Rocker arm covers 142-143
Rocker arm assemblies 147
Front cover, seal and timing gears 148-151
Oil pan 153-154
Oil pump 154
Pilot bearing 164
Piston clearance check 157
Piston/connecting rod assembly 156-160
Piston pin removal and installation 157
Piston ring fit and installation 157-158
Pulley, crankshaft 147
Seal, rear main bearing 162-163
Support, rear engine 142
Valves and valve seats 156
Engine mounts (4-cylinder)
Front 101-102
Rear 102
Engine mounts (V6)
Front 141-142
Rear 142
Evaporative emission control system 209-211
Exhaust system 208-209
Exhaust gas recirculation (EGR system) 214-215

F

Fan, cooling 230-232
Fasteners 3-6
Fast idle adjustment 81
Fender apron 456
Fender, front 456
Firing order 73-74
Flywheel 126, 163-164
Front cover, seal and timing gears 148-151
Fuel injection, electronic (EFI) 197-201
Fuel lines 205
Fuel pump 186-187, 201-205
Fuel quality 178
Fuel tank and lines 205-208
Fuses 274-276
Fusible links 274-276

G

Grille, Radiator 450

H

Hazard flasher 276
Headlight switch 266-268
Heater 234-240
Blower motor switch test 235
Blower motor removal and installation 237
Blower motor voltage test 235
Blower switch replacement 235, 237
Control assembly removal and installation 237-239
Control cable adjustment 239-240
Heater core removal and installation 237
Troubleshooting 235
Hoisting/jacking/lift points 43-45
Hood 454-456
Horn 271-272
Hubs, front 408
Hub, rotor/splash shield 430-432

I

Idle mixture adjustment 81
Idle speed adjustment 80-81
Ignition switch 265-266
Ignition system 259-263
Dura-spark II ignition system 259-26
TFI-IV ignition system 261-263

Ignition timing 79-80
Instrument panel 465-466
Instruments 271

J

Jounce bumper removal/installation
2-wheel drive 351

L

Liftgate 463-464
Lighting system 263-265
Lubricants 6-7

M

Maintenance, non-scheduled 70-73
Maintenance, routine 241-242
Maintenance, scheduled 56-70
Air cleaner filter (carburetted and 2.2L diesel engine) 65
Air cleaner filter (fuel injected and 2.3L diesel engine) 65
Automatic transmission fluid 63-64
Choke linkage 67-69
Clutch reservoir 64
Cooling system 62-63
Crankcase filter (4-cylinder gasoline) 65
Disc brakes 69
Drive belts (4 cylinder) 58-62
Drive belts (V6) 62
Drivetrain lubrication (all vehicles) 69
Drivetrain lubrication (4-wheel drive) 69
Drum brakes, lines and hoses 69
Engine oil and filter 56-58
Exhaust heat shields 69
Fuel filter (diesel engine) 66-67
Idle speed (4 cylinder carburetted engine only) 58
PCV valve 65-66
Spark plugs 65
Transfer case and drive axle fluid level 69-70
Wheel bearings, front 69
Wheel lug nut torque 58
Maintenance, weekly 45, 49-54
Automatic transmission fluid level 53
Battery electrolyte level 51
Brake fluid level 52
Clutch master cylinder fluid level 52-53
Coolant level/condition 50-51
Engine oil level 45, 49
Mechanic's techniques 13-14
Power steering fluid level 53
Tires and wheels 53-54
Windshield wipers/washers 51-52
Manifold, exhaust 107-108
Manifold inspection 108, 146-147
Manifold, intake 103-107
Manifolds, intake and exhaust (2.8L engine) 143-144
Manifolds, intake and exhaust (2.9L engine) 144-146
Manual steering gearbox 4-wheel drive 413-414
Master cylinder, brake 438-440

N

Notes, cautions, and warnings 1-2

O

Oil pan 112-115, 153-154
Oil pressure switch and sending unit 270
Oil pump 115, 154
Oxygen sensor, exhaust gas 216

P

Pad inspection (off vehicle) (disc brakes) 428
Pad inspection (on vehicle) (disc brakes) 423
Pad replacement (disc brakes) 423-428
Parking brake cables 448-449
Pedals, brake 449
Pilot bearing 126-128, 164
Piston/connecting rod assembly 119-123, 156-160
Pitman arm 2-wheel drive 359-361
Pitman arm 4-wheel drive 413
Positive crankcase ventilation (PCV) system ... 212-213
Power brakes vacuum booster 442-445
Power steering gearbox 4-wheel drive 414-416
Pressure differential control valve 446-447
Vacuum pump 445-446
Pulley, crankshaft 147

R

Radiator 224-230
Draincock replacement 228-229
Oil cooler replacement 228
Radiator hose 229-230
Radiator tank/core 227
Radiator tank installation 227-228
Radiator tank removal 225-226
Radius arm insulator replacement
2-wheel drive 343-344
4-wheel drive 396
Radius arm removal/installation
2-wheel drive 342-343
4-wheel drive 396
Rear stabilizer bar removal and installation 369-370
Rear axle and axle shafts 370-377
Axle housing removal and installation 376-377
Axle shaft oil seal replacement (6 3/4 in. axle) 374
Axle shaft oil seal replacement (7 1/2 in./8.8 in. axle) 376
Axle shaft removal/installation (6 3/4 in. axle) 372-374
Axle shaft removal/installation (7 1/2 in./8.8 in. axle) 375-376
Carrier cover removal and installation 370-372
Rear axle identification 370
Refrigerant 242-243
Rocker arm assemblies 147
Rocker arm covers 142-143
Rocker arms and hydraulic lash adjuster 103
Rotor inspection (disc brakes) 431-432

S

Safety checks, owner 54-56
Safety first 2
Seal, rear main bearing 124-126, 162-163
Sealant gasket 14-15
Seats 464-465
Service hints 2-3
Shock absorber operational check 366-369
2-wheel drive 341
4-wheel drive 393-394
Shock absorber removal and installation 366
2-wheel drive 326-341
4-wheel drive 392
Shoe installation (drum brakes) 435-436
Shoe removal (drum brakes) 434-435
Spark plugs 75-78
Spring coil 4-wheel drive 394
Spring, leaf 369
Stabilizer bar 394-396
Starter 255-259
Steering gearbox 361
Steering linkage
2-wheel drive 357
4-wheel drive 412

Steering system 411-416
Tie rod, connecting rod and drag link 412
Steering linkage 412
Pitman arm 413
Manual steering gearbox 413-414
Power steering gearbox 414-416
Steering system, 2-wheel drive 357-362
Steering linkage 357
Tie rod, connecting rod and drag link 357-359
Pitman arm 359-361
Steering gearbox, manual 361
Steering gearbox, power 361
Steering wheel and column, 2-wheel drive 362-364
Steering wheel and column 4-wheel drive 416-417
Steering knuckle 4-wheel drive 401-402
Stone deflector 450
Stoplight switch 447-448
Suspension, front (2-wheel drive) 338-352
Shock absorber removal and installation 338-341
Shock absorber operational check 341
Spring, coil 341-342
Stabilizer bar (Ranger) 342
Stabilizer bar (Bronco II) 342
Radius arm removal and installation 342-343
Radius arm insulator 343-344
Wheel spindle, front 344-347
Ball joint replacement 347
Axle, i-beam 347-351
Axle pivot bracket removal and installation 351
Jounce bumper removal and installation 351
Suspension, front 392-405
Shock absorber 392-395
Spring coil 394
Stabilizer bar 394-396
Radius arm removal and installation 396
Radius arm insulator 396
Wheel spindle, shaft and joint 396-401
Steering knuckle 401-402
Ball-joint replacement 402-403
Axle, front drive 403-404
Axle pivot right-hand bracket 404-405
Suspension, rear 366-370
Shock absorber removal and installation 366
Shock absorber operational check 366-369
Spring, leaf 369
Rear stabilizer bar removal and installation 369-370
Switches 265-270, 447-448
Ignition 265-266
Headlight 266-268
Wiper 268-269
Coolant temperature 269-270
Oil pressure 270
Stoplight 447-448
Spring, coil
2-wheel drive 341-342
Stabilizer bar (Ranger)
2-wheel drive 342
Stabilizer bar (Bronco II)
2-wheel drive 342

T

Tailgate removal/installation 463
Test equipment 10-13
Thermactor system 213-214
Thermostat (4-cylinder) 223-224
Thermostat (V6) 224
Tie rod, connecting rod and drag link
2-wheel drive 357-359
4-wheel drive 412
Tools, basic hand 7-10
Torque specifications 3
Towing 45
Transmission, Automatic 329-331
Band adjustment 331-335
C5 transmission intermediate (front) band adjustment 331
C5 transmission low-reverse (rear) band adjustment 332
C3 and A4LD transmission inter-mediate (front) band adjustment 333
A4LD transmission overdrive band 333-334
Transmission installation 335
Transmission removal 334
Transmission, manual 289-292
Mainshaft disassembly 298
Transmission assembly 304-306
Transmission disassembly 301
Toyo kogyo 4-and 5-speed transmission 292-301
Transmission disassembly 292-298
Transmission assembly 300
Transmission, Mitsubishi 5- speed 306-313
Mainshaft assembly 312-313
Mainshaft disassembly 312
Transmission disassembly 306-312
Transfer case 313-329
Borg Warner 13-50 transfer case 314-320
Description 313-314
Countershaft and input shaft disassembly/assembly 314
Planetary gear set disassembly and assembly 318-319
Removal installation 315
Transmission assembly 315
Transfer case assembly 319-320
Transfer case disassembly 316-318
Troubleshooting
Automatic transmission 38
Brake system 39-40
Charging system, EVR 21-24
Charging system, IRS 24-26
Charging system (general) 19-21
Clutch 37-38
Cooling system 40
Diesel engine 35-37
Differential 39
Emission control systems 32-33
Engine noises 33-34
Fuel system (carburetted) 31-32
Gasoline engine 34-35
Ignition, breakerless 26-31
Ignition system 26
Jacking 43-45
Lift points 43-45
Manual transmission 38
Starting system 17-19
Steering and suspension 40
Turn signals 276
Tune-up, gasoline engine 73-82
Compression test 75
Distributor cap, wires and rotor 78-79
Fast idle adjustment 81
Firing order 73-74
Idle mixture adjustment 81
Idle speed adjustment 80-81
Ignition timing 79-80
Spark plugs 75-78
Valve clearance adjustment 74
Tune-up, diesel engine 82-86

V

Vacuum pump (diesel engine) 445-446
Valve clearance adjustment 74
Valve cover 102-103
Valves and valve seats 119, 156

W

Water pump 232-234
Wheel alignment 405-408
2-wheel drive 352-355
4-wheel drive 405-408
Wheel bearings 408-411
Wheel cylinder 436
Wheel spindle, shaft and joint
4-wheel drive 396-401
Windshield wiper switch 268-269
Windshield wiper/washer 272-274
Wheel spindle, front
2-wheel drive 344-347

LABOR, TIME AND PARTS PRICING GUIDE

The time estimates, price information and skill level data that follow were prepared in conjunction with Mitchell Information Services, the leader in providing this material to professional mechanics, garages and fleet operators.

This section will tell you 3 vital things about 116 different jobs on the Ranger and Bronco II pickups:

How long the job takes.

How complicated the job is.

How much the parts should cost.

1. How long the job takes: This is the same time figure used by dealers and independent shops to estimate labor charges. Times are shown in tenths of an hour (6-minute intervals). For example, a labor time of 0.3 is 3 tenths of an hour or 18 minutes.

These times are estimates which generally reflect the needs of an average trained auto mechanic using factory recommended tools and following factory recommended procedures. They include allowances for repair preparation, normal cleanup associated with repair, road testing, mechanic personal needs, preventive measures and any other service that would normally accompany an individual operation.

Times do not include allowances for diagnosis, machine operations or obtaining substitutes for factory recommended special tools.

Estimated labor time can be used in 2 ways:

a. If you decide to have a job done professionally, you can compare the time specified in this chart with the shop's labor estimate for the same work.
b. If you decide to do a job yourself, you can use the estimated time, together with the job's skill level, to estimate how long it will take you.

WARNING

Unless you are a professional mechanic with a fully equipped shop, you should expect a job to take you longer than the estimated time. Since the skills and equipment possessed by home mechanics vary widely, it is impossible to estimate how long a job should take a home mechanic. Use the estimated labor times as a rough guide only. Never hurry a job, trying to finish within the estimated time. You may damage the vehicle or injure yourself.

2. How complicated the job is: Each job is placed in one of 4 skill levels:

A. HIGHLY SKILLED—Requires the use of precision measuring tools and highly specialized measuring equipment. Also requires thorough knowledge of complicated systems and strong diagnostic ability. Some

jobs in this category can be done by home mechanics. Often, money can be saved by removing and installing a part yourself and having a shop do only the part of a job which requires special training and equipment. The manual will tell which of these jobs can be done by home mechanics.

B. SKILLED—Requires the use of basic tools and simple measuring devices. Accurate diagnosis is required using special test equipment. Must have basic knowledge of complex systems. Many skilled jobs can be done by a beginner using the Clymer manual. Often it is faster and more economical to have the job done by a shop, and the manual will point out such instances.

C. SEMI-SKILLED—Diagnosis is limited to a single possible cause of a problem. Must have basic knowledge of component or system operation. Can be done by a beginner using the Clymer manual.

D. LOW SKILLED—Repair consists of part replacement only. Can be done by a beginner using the Clymer manual.

The letter indicating skill level follows each job description.

3. How much the parts should cost: These are manufacturer's suggested retail prices as of the date this guide was prepared. These prices can be used for comparison. Ranger and Bronco II dealerships are independent businesses and may charge more or less than the manufacturer's suggested retail prices.

In comparing current parts prices with prices listed here, be sure to allow for time that has passed since the table was prepared.

Model Identification

Vehicles in this list are identified by model year, model code and date of manufacture. To identify your vehicle's model year and model code, refer to the vehicle identification plate in the engine compartment. Date of manufacture is usually listed on a plate on the driver's doorjamb.

Abbreviations

Several abbreviations are used in this guide. They are:

a. R&R: Remove and replace. Includes removal of part or assembly from vehicle, transfer of attached parts to new part or assembly and installation of new part or assembly on vehicle. Includes any alignment necessary to reposition new part or assembly.

b. R&I: Remove and install. Includes removal of part or assembly from vehicle and installation of same part or assembly on vehicle. Includes any alignment necessary to reposition part or assembly.

c. * Indicates item discontinued by manufacturer. Price, if listed, is last available factory price.

The Clymer Labor, Time and Parts Pricing Guide is prepared from copyrighted proprietary information of Mitchell Information Services, San Diego, CA., and is reproduced with their permission.

DISCLAIMER OF WARRANTIES: Although the information contained within this volume has been obtained from sources generally believed to be reliable, no warranty (express or implied) can be made as to its accuracy or completeness, nor is any responsibility assumed by the publisher or anyone connected with it for loss or damages suffered through reliance on any information contained in this guide. Specifically, no warranty of merchantability, fitness for a particular purpose or any other warranty is made or to be implied with respect to this guide, and no person has the authority to modify such limitation except in a writing signed by a corporate officer of the publisher.

LABOR, TIME AND PARTS PRICING GUIDE

1. Accelerator cable R&R (C)
Labor time 0.5

2. Air conditioner belt replacement (D)
Labor time
Gasoline 0.7
Diesel 0.5

3. Air filter element R&I (D)
Labor time 0.3
Filter price
1983
Four
Motorcraft FA728 ..... $8.52
Motorcraft FA729 ..... $15.39
V6 ..... $10.33
1984-1985
Four
Standard duty $8.52
Heavy duty $15.39
V6
Standard duty $9.63
Heavy duty
1984 ..... $10.02
1985 ..... $15.39
1986
Bronco II $8.50
Ranger (2.0) $8.52

4. Air pump R&R (C)
Labor time
Four 0.5
V6 ..... 0.7
Pump price $141.67

5. Alternator belt replacement (D)
Labor time 0.5
1973-1980 ..... 0.7

6. Alternator R&R (D)
Labor time 0.6
Additional time:
If necessary to transfer pulley, add 0.1.
Alternator price
1983
65 amp $233.45
70 amp $288.30
100 amp $345.48
1984-1986
40 amp Ranger
With integral regulator $167.90
Without integral regulator ..... Not available.
60 amp Ranger $192.03
65 amp $233.45
70 amp $288.30
100 amp $345.48

7. Automatic choke overhaul
Not applicable.

ABBREVIATIONS

For full explanation of abbreviations, see the first page of this section.
Skill levels:
A. Highly skilled
B. Skilled
C. Semi-skilled
D. Low skilled
R&R: Remove and replace
R&I: Remove and install
Prices: These are manufacturer's suggested retail prices as of the date this guide was prepared.
* Indicates item discontinued by manufacturer. Price, if listed, is last available factory price.

8. Automatic transmission R&I and overhaul (A)
A4LD
Labor time
2-wheel drive 11.1
4-wheel drive 13.3
Additional time:
With transfer case skid plate add 0.2.
Transmission price
Ranger four $1075.24
V6 ..... $1274.68
C3, C5
Labor time
Bronco II 10.3
Ranger
2-wheel drive (C3) 8.1
4-wheel drive (C5) 10.3

9. Automatic transmission throttle linkage adjustment (B)
Labor time 0.5

10. Automatic transmission neutral safety switch R&R (C)
Labor time 0.5
Switch price
A4LD transmission
Except 1986 Bronco II
5-pin switch $31.53
1986 Bronco II 5-pin switch . $36.47
C3 ..... $31.53
C5 ..... $36.47

11. Battery test (C)
Labor time 0.3

12. Battery R&R (D)
Labor time 0.5

13. Brake booster R&R (C)
Labor time 0.8
Booster price $126.43

14. Breaker point R&R (C)
Not applicable.

15. Camshaft R&R (B)
Labor time
Four
With fuel injection 5.3
Without fuel injection 3.0
V6
Bronco II
Standard trans 10.5
Auto trans 10.7
Ranger
Standard trans 10.2
Auto trans 10.7
Additional time:
Where power steering interferes, add 0.2.
Where air conditioning interferes, add 0.3 (four) or 0.2 (V6).
Camshaft price
Four $162.03
V6
2.8L $117.57
2.9L $148.66
1980 ..... $137.43

16. Carburetor R&I and overhaul (B)
Labor time
Four 2.0
V6 ..... 3.4

17. Carburetor and/or gasket R&R (B)
Labor time
Four 1.0
V6 ..... 1.3
Additional time:
Where necessary to R&I and adjust throttle solenoid and choke assembly, add 0.4.
Carburetor price
1983
2.0L engine
ID No. E27E-CB, CC, GB $221.48
ID No. E27E-EA, FA $228.68
2.3L engine, 2-wheel drive
Standard trans, except cab and chassis
California $228.68
Non-California, high altitude $221.48
Non-California, non-high altitude
ID No. E27E-FB $221.48
ID No. E37E-LA $228.68
Standard trans, cab and chassis $228.68
Auto trans
California $228.68
Non-California, high altitude
ID No. E27E-EB $221.48
ID No. E37E-TA $228.68
Non-California, non-high altitude
ID No. E27E-HB $221.48
ID No. E37E-BA $228.68

LABOR, TIME AND PARTS PRICING GUIDE (continued)

17. Carburetor and/or gasket R&R (B) (cont.)
Carburetor price (cont.)
1983 (cont.)
2.3L engine, 4-wheel drive .. $228.68
V6 ..... $392.59
1984
Four $228.68
V6
Except California auto trans $447.09
California auto trans $437.59
1985 (V6) $450.69
1986
Bronco II (V6) $252.91
Ranger (2.0L) $266.71

18. Charging system test (B)
Labor time 0.6

19. Clutch plate or disc R&R (C)
Labor time
4-speed
2-wheel drive
Four, gasoline 3.0
Four, diesel 2.9
V6 ..... 3.7
4-wheel drive
Four 4.2
V6 ..... 5.3
5-speed
2-wheel drive
Four, gasoline 3.0
Four, diesel 2.6
V6
1983-1984 ..... 3.9
1985-1986 ..... 4.3
4-wheel drive (V6) 5.3
Pressure plate price (exchange)
1983-1984
Gasoline $48.95
Diesel $47.58
1985-1986 ..... $48.95
Disc price (exchange)
1983-1985
Gasoline $48.38
Diesel $50.50
1986
Four
Gasoline $48.38
Diesel $50.50
V6 ..... $48.38

20. Clutch pedal adjustment (C)
Labor time 0.5

21. Clutch bleeding (C)
Labor time 0.6

22. Clutch release bearing R&R (C)
Labor time: add 0.2 to transmission R&I time.

ABBREVIATIONS

For full explanation of abbreviations, see the first page of this section.
Skill levels:
A. Highly skilled
B. Skilled
C. Semi-skilled
D. Low skilled
R&R: Remove and replace
R&I: Remove and install
Prices: These are manufacturer's suggested retail prices as of the date this guide was prepared.
* Indicates item discontinued by manufacturer. Price, if listed, is last available factory price.

22. Clutch release bearing R&R (C) (cont.)
Additional time:
With multi-piece driveline, add 0.2.
With skid plate, add 0.2.
Where necessary to R&I carpet, add 0.7.
Hub and bearing price
1983
Four $29.45
V6 ..... $27.27
1984
Gasoline $29.45
Diesel $40.04
1985-1986 ..... $29.43

23. Clutch master cylinder R&R (C)
Labor time
2-wheel drive 3.2
4-wheel drive 5.1
Master cylinder price
1983
Gasoline
Ranger through 4/30/83 .... $14.26
Ranger, 5/1/83-on $32.06
Diesel $26.87
1984-1985
Bronco II
1984 ..... $31.60
1985 ..... $115.63
Ranger
1984
Gasoline (four) $32.06
Gasoline (V6) $31.60
Diesel $26.87
1985 ..... $115.63

24. Clutch slave cylinder R&R (C)
Labor time
2-wheel drive 3.2
4-wheel drive 5.1

24. Clutch slave cylinder R&R (C) (cont.)
Slave cylinder price
1983-1984
Four (gasoline) $44.23
Four (diesel) $50.11
V6 ..... $47.32
1985-1986 ..... $44.23

25. Compression test (C)
Includes: clean and adjust spark plugs.
Labor time
Four 0.7
V6 ..... 1.0

26. Connecting rod and piston assembly R&I (A)
Labor time
Four
One 8.9
All 10.7
V6
One 9.8
One each side 11.4
All 14.2
Additional time:
Where air conditioning interferes, add 0.3.
Where power steering interferes, add 0.2 (Bronco II, Ranger four).
Connecting rod price
Four $46.93
V6 ..... $45.24

27. Connecting rod bearing R&R (B)
Labor time
Four
2.0L 4.3
2.3L
With fuel injection
Standard trans
One 4.1
All 5.0
Auto trans
One 3.5
All 4.4
Without fuel injection
One 3.5
All 4.4
V6
Standard trans
One 4.7
All 5.7
Auto trans
One 4.9
All 5.9

28. Cooling system flushing (D)
Labor time 0.7

29. Crankshaft R&R (A)
Labor time
Four
2.0L 8.3

LABOR, TIME AND PARTS PRICING GUIDE (continued)

29. Crankshaft R&R (A) (cont.)
Labor time (cont.)
Four (cont.)
2.3L
Standard trans
1983-1984 ..... 8.3
1985-1986 ..... 9.8
Auto trans 8.6
V6
Standard trans 10.3
Auto trans 10.5
Additional time:
Where air conditioning interferes, add 1.0 (2.3L four) or 0.3 (V6).
Where power steering interferes, add 0.2.
Crankshaft price
Four $386.90
V6 ..... $479.25

30. Crankshaft damper or pulley R&R (C)
Labor time
Four
1983-1984 ..... 0.8
1985-1986 ..... 0.7
V6
Standard trans 1.1
Auto trans 1.3

31. Crankshaft rear seal R&R (B)
Circular one-piece seal includes: R&I transmission and flywheel.
Split lip-type seal includes: replacing top and bottom halves.
Labor time
Four
One-piece design (circular type)
2-wheel drive
Standard trans 3.4
Auto trans 4.6
4-wheel drive 4.5
Two-piece design (split lip type)
Standard trans 4.3
Auto trans 4.8
V6
2-wheel drive
Standard trans 4.7
Auto trans 4.9
4-wheel drive 5.6
Seal price
Four
1983
Full circle $6.08
Split lip $6.05
1984-1986 ..... $6.08
V6 ..... $9.63

32. Cylinder head R&R (A)
Labor time
Four
With fuel injection 8.7

ABBREVIATIONS
For full explanation of abbreviations, see the first page of this section.
Skill levels:
A. Highly skilled
B. Skilled
C. Semi-skilled
D. Low skilled
R&R: Remove and replace
R&I: Remove and install
Prices: These are manufacturer's suggested retail prices as of the date this guide was prepared.
* Indicates item discontinued by manufacturer. Price, if listed, is last available factory price.

32. Cylinder head R&R (A) (cont.)
Labor time (cont.)
Four (cont.)
Without fuel injection 7.7
V6
Right side 8.5
Left side 8.4
Both 11.6
Additional time:
Where air conditioning interferes, add:
Four ..... 0.3.
V6 standard trans
Right side ..... 0.3.
Left side ..... 0.1.
Both ..... 0.4.
V6 auto trans ..... 0.3.
Where power steering interferes, add 0.2 (Ranger four).
Cylinder head price
1983
Four $351.60
V6 ..... $376.88
1984
Four $351.60
V6 ..... $293.17
1985-1986
Four $351.60
2.8L V6 ..... $293.17
2.9L V6 ..... $272.72

33. Differential overhaul (A)
Labor time 6.5

34. Differential R&R (A)
Labor time 3.6

35. Distributor cap R&R (C)
Labor time
Bronco II 0.5
Ranger 0.7
Distributor cap price
1983-1985
Four $15.42
V6 ..... $17.38

35. Distributor cap R&R (C) (cont.)
Distributor cap price (cont.)
1986
Bronco II $11.85
Ranger
2.0L $15.42
2.3L ..... Not available.
V6 ..... $11.85

36. Distributor R&R (C)
Includes: adjust ignition timing.
Labor time 1.0
Distributor price
1983
2.0L
ID No. E27E-BA $136.81
ID No. E37E-GA $125.01
2.3L $125.01
V6 ..... $130.22
1984
Bronco II (V6) $130.22
Ranger
Four $125.01
V6 ..... $130.22
1985 ..... $130.22

37. Drag link R&R (B)
Includes: adjust toe-in.
Labor time 1.1
Drag link price $80.17

38. Drive plate R&I (C)
Labor time: add 0.3 to automatic transmission R&I.
Additional time:
With transfer case skid plate, add 0.2.
With multi-piece driveline, add 0.2 (C3 and C5).
Drive plate price
1983-1984 ..... $81.62
1985-1986 ..... $78.90

39. Drive shaft R&I (C)
Labor time
Front axle 0.7
Rear axle 0.6

40. Drive shaft center bearing R&R
Not available.

41. EGR valve R&R (C)
Labor time
1983-1984 ..... 0.5
1985-1986 ..... 0.6

42. Engine mount R&R (D)
Labor time
2.0L
One side 0.6
Both 0.8
2.3L
With fuel injection
One side 0.9
Both 2.0

LABOR, TIME AND PARTS PRICING GUIDE (continued)

42. Engine mount R&R (D) (cont.)
Labor time (cont.)
2.3L (cont.)
Without fuel injection
One side 0.6
Both 0.8
V6
Right side 0.9
Left side 0.8
Both 1.1
Mount price
1983-1984
Four
Right $26.67
Left $28.03
V6
1983
Right $27.39
Left $26.15
1984
Right $29.03
Left
2-wheel drive $25.30
4-wheel drive $29.03
1985-1986
2-wheel drive
Standard trans
Right $26.67
Left $28.03
Auto trans $42.39
4-wheel drive
Right $26.67
Left $28.03

43. Engine oil and filter change (gasoline) (D)
Labor time 0.3
Filter price $7.75

44. Engine oil and filter change (diesel) (D)
Labor time 0.3
Filter price
1983-1984
Except bypass type $11.27
Bypass type $13.15
1985-1986 ..... $23.83

45. Engine overhaul (A)
Labor time
2.0L
Standard trans 20.1
Auto trans 20.4
2.3L
Standard trans 22.3
Auto trans 20.9
V6
Standard trans 27.2
Auto trans 27.4
Additional time:
Where air conditioning interferes, add 1.0 (2.3L) or 0.3 (V6).

ABBREVIATIONS

For full explanation of abbreviations, see the first page of this section.
Skill levels:
A. Highly skilled
B. Skilled
C. Semi-skilled
D. Low skilled
R&R: Remove and replace
R&I: Remove and install
Prices: These are manufacturer's suggested retail prices as of the date this guide was prepared.
* Indicates item discontinued by manufacturer. Price, if listed, is last available factory price.

45. Engine overhaul (A) (cont.)
Additional time (cont.):
Where power steering interferes, add 0.3 (2.3L).

46. Engine R&I (C)
Labor time
2.0L
Standard trans 4.2
Auto trans 4.5
2.3L
Standard trans 5.6
Auto trans 4.5
V6
Standard trans 6.4
Auto trans 6.5
Additional time:
Where air conditioning interferes, add 1.0 (2.3L) or 0.3 (V6).
Where power steering interferes, add 0.3 (2.3L).

47. Engine short block R&R (A)
Labor time
2.0L
Standard trans 14.2
Auto trans 14.5
2.3L
Standard trans 15.8
Auto trans 14.5
V6
1983-1984
Standard trans 14.7
Auto trans 15.4
1985-1986
Standard trans 15.6
Auto trans 15.7
Additional time:
Where air conditioning interferes, add 1.0 (2.3L) or 0.3 (V6).
Where power steering interferes, add 0.3 (2.3L).

48. Evaporative emission canister R&R (C)
Labor time 0.5
Canister price
1983 ..... Not available.
Bronco II (1984-1985) $47.54
Ranger
Four
1984 ..... $53.10
1985-1986 2.3L $55.35
V6 ..... $53.10
Refer to local supplier for applications not listed.

49. Flywheel R&I
Labor time ..... add 0.3 to job No. 19.
Flywheel price
Four $162.48
V6
1983-1984 ..... $175.07
1985-1986 ..... $169.23

50. Float and/or needle seat R&R (B)
Includes: adjust float level, idle speed and fuel mixture.
Labor time
Four 0.7
V6
With limiter caps 1.6
Without limiter caps 1.1

51. Fuel filter R&R (C)
Labor time 0.6
Filter price
1983
Four (gasoline) $6.93
Four (diesel) $13.27
1984-1986
Bronco II
1984 ..... $6.93
1985-1986
Gasoline
Mechanical (in line) $12.45
Mechanical (on carb) $6.93
Electric $22.14
Diesel $23.97
Ranger
Diesel
1984 ..... $49.52
1985-1986
In line $23.97
Except in line $49.52
Gasoline
1984 ..... $6.93
1985-1986
Four
Mechanical (in line) $12.45
Mechanical (on carb) $6.93
Electric $22.14

LABOR, TIME AND PARTS PRICING GUIDE (continued)

51. Fuel filter R&R (C) (cont.)
Filter price (cont.)
1984-1986 Ranger (cont.)
Gasoline (cont.)
V6
1984-1985
In line $12.45
On carb $6.93
1986 (element) $7.20

52. Fuel pump R&R (B)
Does not include: test.
Labor time
Mechanical
2.0L 0.5
2.3L
Manual steering 0.5
Power steering 0.7
V6 ..... 0.8
Electric
Low pressure (tank type)
1984-1986 Ranger 1.3
High pressure (frame type) 0.7
Fuel pump price
1983
Four $27.26
V6 ..... $26.06
1984-1985
Four
1984 ..... $29.75
1985 ..... $184.65
V6 ..... $45.59
1986
Bronco II V6
In engine compartment $184.65
In tank
Regular cab $91.08
Extended cab ..... Not available.
Ranger
Gasoline
In engine compartment ... $184.65
In tank
Regular cab $91.08
Extended cab ..... Not available.
Diesel $184.65

53. Front shock absorber R&R (C)
Labor time
One side 0.5
Both 0.7
Shock absorber price
2-wheel drive
Ranger
1983-1985 ..... $25.54
1986 ..... See local supplier.
4-wheel drive
Bronco II $25.54
Ranger
1983-1985 ..... $25.54
1986 ..... $30.81

ABBREVIATIONS
For full explanation of abbreviations, see the first page of this section.
Skill levels:
A. Highly skilled
B. Skilled
C. Semi-skilled
D. Low skilled
R&R: Remove and replace
R&I: Remove and install
Prices: These are manufacturer's suggested retail prices as of the date this guide was prepared.
* Indicates item discontinued by manufacturer. Price, if listed, is last available factory price.

54. Front spring R&R (B)
Does not include: alignment.
Labor time
One side 0.7
Both 1.1

55. Front hub R&R (C)
Labor time
2-wheel drive Ranger
1983 ..... 1.4
1984-1986 ..... 1.2
4-wheel drive 1.2
Hub and rotor price
Bronco II $81.02
Ranger
2-wheel drive $93.68
4-wheel drive $81.02

56. Front wheel bearing R&R (C)
Labor time
2-wheel drive Ranger
1983
One side 1.0
Both 1.8
1984-1986
One side 0.9
Both 1.6
4-wheel drive
One side 0.9
Both 1.6
Inner bearing price
1983
Ranger 2-wheel drive
Cone $12.00*
Cup $3.00*
Ranger 4-wheel drive
Cone $11.40
Cup $5.40
1984-1986
2-wheel drive
Cone $8.75
Cup $4.35

56. Front wheel bearing R&R (C) (cont.)
Inner bearing price (cont.)
1984-1986 (cont.)
4-wheel drive
Cone $11.40
Cup
1984-1985 ..... $5.40
1986 ..... Not available.
Outer bearing price
2-wheel drive
Cone $7.03
Cup $3.74
4-wheel drive ..... Not available.

57. Front axle shaft R&I (4WD) (C)
Labor time
Right side 1.6
Left side 0.8
Both 2.2
Axle shaft price
Right side $145.50
Left side $142.98

58. Free wheel hub R&R (4WD) (C)
Labor time 1.1

59. Free wheel hub overhaul (4WD)
Not available.

60. Front brake pad R&R (C)
Labor time
1983-1984
With split caliper pins (1983-1984) 1.0
Without split caliper pins (1984) 1.1
1985-1986 ..... 1.0
Pad price
Ranger $62.00
Refer to local supplier for applications not listed.

61. Front brake caliper R&R (C)
Includes: bleed system and replace pads if necessary.
Labor time
One side 0.8
Both sides 1.2
Caliper price $129.80

62. Front brake caliper overhaul (B)
Labor time
One side 1.2
Both 2.0
Kit price
1983-1985 ..... $7.37
1986 ..... $16.05

63. Fuel pump pressure test (B)
Labor time
Mechanical 0.5
Electric 0.7

64. Headlight replacement (D)
Does not include: adjustment.

LABOR, TIME AND PARTS PRICING GUIDE (continued)

64. Headlight replacement (D) (cont.)
Labor time
Single headlights
One side 0.3
Both 0.4
Dual headlights
One side (one) 0.3
One side (both) 0.4
One each side 0.5
All 0.7
Bulb price $24.14

65. Headlight switch R&R (B)
Labor time 0.6
Switch price $16.46

66. Heater hose replacement (D)
Labor time 0.8

67. Heater core R&R (A)
Labor time 1.1

68. Horn R&R (D)
Labor time 0.5
Horn price (high and low pitch) ..... $16.99 each

69. Idle mixture adjustment
Not available.

70. Idle speed adjustment
Not available.

71. Igniter R&R
Not applicable.

72. Ignition coil R&R (C)
Includes: test.
Labor time
1983
Ranger 0.6
Bronco II 0.5
1984-1986
Except E-core type 0.6
E-core type 0.5
Coil price
1983 ..... $29.18
1984-1985
Four $29.18
V6 ..... $32.65
1986 ..... $29.18

73. Ignition switch R&R (B)
Labor time 0.5
Switch price $11.43

74. Ignition timing adjustment (C)
Labor time 0.5

75. Load sensing valve R&R
Not applicable.

76. Lower and upper ball-joint R&R (B)
Labor time
2-wheel drive add 0.2 to job No. 110.
4-wheel drive included in job No. 110.
Ball-joint price
2-wheel drive
1983
Upper $33.09
Lower $45.48

ABBREVIATIONS
For full explanation of abbreviations, see the first page of this section.
Skill levels:
A. Highly skilled
B. Skilled
C. Semi-skilled
D. Low skilled
R&R: Remove and replace
R&I: Remove and install
Prices: These are manufacturer's suggested retail prices as of the date this guide was prepared.
* Indicates item discontinued by manufacturer. Price, if listed, is last available factory price.

76. Lower and upper ball-joint R&R (B) (cont.)
Ball-joint price (cont.)
2-wheel drive (cont.)
1984-1986
Upper $44.06
Lower $45.48
4-wheel drive
Upper $44.13
Lower $45.56

77. Lower suspension arm (I-beam axle) R&R (B)
Labor time
2-wheel drive
Forged axle
One side 1.8
Both 3.0
Stamped axle
One side 2.5
Both 4.4
4-wheel drive
Right side 2.9
Left side 3.3
Both 5.4
I-beam axle price
2-wheel drive $172.28
4-wheel drive
Right $367.72
Left $345.28

78. Lower suspension arm (I-beam axle) pivot bushing R&R
Labor time ..... add 0.2 to job No. 77.

79A. Manifold gasket R&I intake (C)
Labor time
Four
2.0L 1.6
2.3L
Non-power steering 1.6
Power steering 1.9
V6 ..... 3.8

79A. Manifold gasket R&I intake (C) (cont.)
Additional time:
Where air conditioning interferes, add 0.2.
Where cruise control interferes, add 0.1.

79B. Manifold R&R, intake
Add 0.2 to job No. 79A.
Intake manifold price
1983
Four $86.75
V6 ..... $315.43
1984-1985
Bronco II $204.25
Ranger
Four $86.75
V6
1984 through 4/30/85 ..... $190.00
Others ..... Not available.
1986
Bronco II
Upper $140.00
Lower $223.80
Ranger
Four
Upper $126.93
Lower $165.28
V6
Upper $140.00
Lower $223.80

79B. Manifold removal/installation, exhaust (C)
Labor time
2.0L engine 2.1
2.3L engine 1.5
V6
Right 1.9
Left 1.6
Both 3.2
Additional time:
Where air conditioning interferes, add 0.3.
Manifold price
1983
Four $92.07
V6
Right $119.50
Left $144.60
1984-1985
Four $92.07
V6 ..... $99.68
1986
Bronco II
Right $100.23
Left $99.68
Ranger
Four $92.07
V6
Right $100.23
Left $99.68

LABOR, TIME AND PARTS PRICING GUIDE (continued)

80. Master cylinder R&R, brakes (C)
Includes: bleed system.
Labor time
Non-power brakes 0.8
Power brakes 0.7
Master cylinder price
1983-1985 ..... $90.73
1986 ..... $90.74

81. Master cylinder R&I and overhaul, brakes (B)
Includes: bleed system.
Labor time
Non-power brakes 1.2
Power brakes 1.1
Kit price
1983-1985
Non-power brakes $21.50
Power brakes $24.65
1986
Non-power brakes $24.65
Power brakes $21.50

82. Oil pan and/or gasket R&R (C)
Labor time
2.0L engine 3.0
2.3L engine
Standard trans
1983-1984 ..... 3.0
1985-1986 ..... 3.9
Auto trans 3.1
V6
2-wheel drive 3.1
4-wheel drive
Standard trans 4.5
Auto trans 4.7
Additional time:
Where power steering interferes, add 0.3.
Oil pan price
2.0L engine $64.02
2.3L engine
1983
2-wheel drive $64.02
4-wheel drive $61.47
1984 ..... $61.47
1985
Through 4/7/85 ..... $61.47
4/8/85-on $64.02
1986 ..... $64.02
V6 ..... $75.28

83. Oil pump R&I (C)
Labor time
To job No. 82, add:
Four 0.3
V6 ..... 0.2
Oil pump price
Four $65.84
V6
2.8L engine $66.45
2.9L engine $55.15

ABBREVIATIONS
For full explanation of abbreviations, see the first page of this section.
Skill levels:
A. Highly skilled
B. Skilled
C. Semi-skilled
D. Low skilled
R&R: Remove and replace
R&I: Remove and install
Prices: These are manufacturer's suggested retail prices as of the date this guide was prepared.
* Indicates item discontinued by manufacturer. Price, if listed, is last available factory price.

84. Power steering belt R&R (D)
Labor time 0.5

85. Piston and rod assembly R&I, all (A)
Labor time:
Four
One 8.9
All 10.7
V6
One 9.8
One each side 11.4
All 14.2
Piston and pin price
1982-1984
2.0L engine
1982 ..... $55.22
1983
Through 8/1/82 ..... $55.22
8/2/82-on $41.61
2.3L engine $21.72
V6
1982-1983 ..... $25.73
1984 ..... $61.13
1985-1986
2.0L engine $41.61
2.3L engine $20.54
2.8L engine $61.13
2.9L engine $61.15

86. PCV valve R&R (C)
Labor time 0.3
PCV valve price
1983
Four
With high altitude emission system $3.43
Without high altitude emission system 3.65
V6 ..... $2.85
1984-1986
Bronco II $3.43

86. PCV valve R&R (C) (cont.)
PCV valve price (cont.)
1984-1986 (cont.)
Ranger
Four
1984
With high altitude emission system $3.43
Without high altitude emission system $3.65
1985-1986 ..... $3.44
V6 ..... $3.43

87. Pitman arm R&R (B)
Does not include: alignment.
Labor time 0.7
Pitman arm price $40.48

88. Power steering pump R&R (B)
Labor time
Gasoline
Four
1983-1984 ..... 0.8
1985-1986 ..... 0.9
V6 ..... 1.0
Diesel 1.6
Pump price $215.60

89. Power steering pump R&I and overhaul (B)
Labor time
Gasoline
Four
1983-1984 ..... 1.5
1985-1986 ..... 1.6
V6 ..... 1.8
Diesel 2.2

90. Radiator R&R (D)
Includes: replace hoses.
Labor time
Gasoline 1.0
Diesel 1.3

91. Radiator hose R&R (D)
Labor time
Upper or lower 0.6
Both 0.8
Upper hose price
1983
Gasoline
Four $13.06
V6 ..... $13.93
Diesel $9.32
1984
Bronco II $8.38
Ranger
Gasoline
Four $13.06
V6 ..... $8.38
Diesel $9.32
1985-1986
Gasoline
Four $10.40

LABOR, TIME AND PARTS PRICING GUIDE (continued)

91. Radiator hose R&R (D) (cont.)
Upper hose price (cont.)
1985-1986 (cont.)
Gasoline (cont.)
V6
2.8L engine $10.91
2.9L engine $10.40
Diesel $10.40
Lower hose price
1983
Gasoline
Four $13.24
V6
With air conditioning $9.34
Without air conditioning ... $18.36
Diesel $10.83
1984
Bronco II $16.49
Ranger ..... Not available.
1985-1986
Diesel $11.06
Gasoline
Four $16.09
V6
2.8L engine
Standard trans $17.10
Auto trans $11.06
2.9L engine
Standard trans $16.25
Auto trans $14.17

92. Rear axle housing R&R (A)
Labor time 4.9

93. Rear axle shaft R&R (C)
Labor time
One side 0.9
Both 1.4
Axle shaft price
6 3/4 in. ring gear $140.15
7 1/2 in. ring gear
Right
ID No. 7E2-BA $140.15
ID No. 7E4-AA $144.27
Left $140.15
8 3/4 in. ring gear
WDR-E, WFL-D, 860B, 1B axles $154.47
WDR-J, WFL-H, 364A, 365A axles $132.42
All others $140.15

94. Rear wheel bearing R&R (C)
Labor time
One side 0.8
Both 1.3
Bearing price
6 3/4 in. ring gear $41.73
7 1/2 in. ring gear $15.53

95. Rear brake drum R&R (C)
Labor time, one side 0.6
Both 1.0
Brake drum price $52.73

ABBREVIATIONS
For full explanation of abbreviations, see the first page of this section.
Skill levels:
A. Highly skilled
B. Skilled
C. Semi-skilled
D. Low skilled
R&R: Remove and replace
R&I: Remove and install
Prices: These are manufacturer's suggested retail prices as of the date this guide was prepared.
* Indicates item discontinued by manufacturer. Price, if listed, is last available factory price.

96. Rear brake shoe R&R (C)
Includes: Bleed system and adjust brakes and parking brake where necessary.
Labor time
1983-1984 ..... 1.8
1985-1986 ..... 1.6
Shoe price
Bronco II $50.08
Ranger
9 in. brakes $50.08
10 in. brakes $40.14

97. Rear wheel cylinder R&R (B)
Includes: Bleed system and replace shoes if necessary.
Labor time
1983-1984
One side 1.7
Both 3.0
1985-1986
One side 1.5
Both 2.6
Wheel cylinder price
1983 ..... $20.31
1984-1986 ..... $20.90

98. Rear wheel cylinder overhaul (B)
Includes: Bleed system and replace shoes if necessary.
Labor time
1983-1984
One side 1.8
Both 3.2
1985-1986
One side 1.6
Both 2.8

99. Regulator R&R (B)
Incudes: test.
Labor time 0.5
Regulator price
1983-1984 ..... $36.29

99. Regulator R&R (B) (cont.)
Regulator price (cont.)
1985-1986
Diesel $29.52
Gasoline
With integral regulator $29.52
Without integral regulator ... $36.29

100. Rings, piston R&R
Labor time ..... add 0.3 per piston to job No. 85

101. Rocker assembly and shaft assembly R&R (B)
Not applicable.

102. Shock absorber R&R, rear (D)
Labor time
One side 0.5
Both 0.8
Shock absorber price
1983 ..... $25.54
1984-1986
Bronco II $30.81
Ranger
1984-1985 ..... $25.54
1986
2-wheel drive $25.54
4-wheel drive $30.81

103. Spark plugs, clean or replace (C)
Labor time
Four 0.5
V6 ..... 0.8

104. Spring R&R, rear (C)
Labor time
One side 1.1
Both 2.2

105. Stabilizer bar and/or bushings R&R (C)
Labor time ..... Not available.
Stabilizer bar price
2-wheel drive (Ranger) $55.09
4-wheel drive
Bronco II $57.38
Ranger $55.09

106. Starter R&R (D)
Labor time
Four
Gasoline 0.5
Diesel 1.0
V6 ..... 0.6
Starter price
1983
Four
Gasoline
Standard trans $221.57
Auto trans $214.55
Diesel $350.91
V6
Standard trans $214.57
Auto trans $195.48

LABOR, TIME AND PARTS PRICING GUIDE (continued)

106. Starter R&R (D) (cont.)
Starter price (cont.)
1984
Four
Gasoline
Standard trans $221.57
Auto trans $214.59
Diesel $350.91
V6 ..... $214.57
1985-1986
Four $214.55
V6 ..... $214.57

107. Starter circuit check (B)
Labor time 0.5

108. Steering damper R&R
Not applicable.

109. Steering gear R&R (C)
Labor time 1.0
Steering gear price
1986 Ranger 4-wheel drive Not available.
All others $316.35

110. Steering knuckle R&R (B)
Includes: replace ball-joints on 4-wheel drive only.
Does not include: alignment.
Labor time
2-wheel drive (Ranger)
One side 2.2
Both 3.0
4-wheel drive
Right side 2.6
Left side 1.8
Both 2.0
Steering knuckle price
2-wheel drive (Ranger)
1983
Through 5/31/83 ..... $160.00
6/1/83-on $85.02
1984-1986 ..... $85.02
4-wheel drive $283.36

111. Tension strut R&R
Not applicable.

112. Thermostat and/or outlet R&R (D)
Labor time
Gasoline
Four 0.7
V6 ..... 0.9
Diesel 0.9
Thermostat price
Four
Gasoline $9.66
Diesel
1983-1984 ..... $9.40
1985-1986 ..... $8.68
V6
2.8L engine
1984 ..... $9.21

ABBREVIATIONS

For full explanation of abbreviations, see the first page of this section.
Skill levels:
A. Highly skilled
B. Skilled
C. Semi-skilled
D. Low skilled
R&R: Remove and replace
R&I: Remove and install
Prices: These are manufacturer's suggested retail prices as of the date this guide was prepared.
* Indicates item discontinued by manufacturer. Price, if listed, is last available factory price.

112. Thermostat and/or outlet R&R (D) (cont.)
Thermostat price (cont.)
V6 (cont.)
2.8L engine (cont.)
1985
Through 12/31/84 ..... $9.21
1/1/85-on $8.62
2.9L engine $8.62

113. Tie rod and/or ends R&R (B)
Includes: 1980-1985 Adjust toe-in only.
Deduct 0.4 if alignment is also performed.
Labor time
Inner (rod) 1.1
Outer (end)
One side 1.0
Both 1.4
Inner and outer (left side) 1.3
Inner and both outers 1.6
Tie rod and/or end price
2-wheel drive
Inner $31.87
Outer $31.85
4-wheel drive
Inner $35.94
Outer
Right $28.67
Left $27.91

114A. Timing belt R&R (B)
Applies to 2.0L and 2.3L gasoline engines.
Labor time 2.2
Additional time:
Where air conditioning interferes, add 0.3.
Where power steering interferes, add 0.3.
Timing belt price $21.30

114B. Timing chain R&R (B)
Applies to 2.9L V6 engine.
Labor time 5.5

114B. Timing chain R&R (B) (cont.)
Additional time:
Where air conditioning interferes, add 0.2.
Timing chain price $26.96

114C. Timing gear R&R (B)
Applies to 2.8L V6 engine.
Labor time
Standard trans 6.0
Auto trans 6.1
Gear price
Camshaft gear
1982-1983 ..... $32.03
1984-1985 ..... $46.52
Crankshaft gear $58.11

115. Toe-in adjustment (B)
Labor time 0.7

116. Torsion bar R&R
Not applicable.

117. Transfer case R&I and overhaul (B)
Labor time 5.8

118. Transfer case R&I (C)
Labor time 2.0
Transfer case price
1983-1984 Serviced in component parts.
1985
Bronco II
ID No. 5JA ..... Not available.
ID No. 5JB $1068.43
Ranger
Standard trans
108 in. wheelbase
ID No. JA ..... Not available.
ID No. JB $1068.43
114 in. wheelbase
ID No. 5HA ..... Not available.
ID No. 5HB $1068.43
Auto trans ..... Not available.
1986 ..... $1068.43

119A. Transmission R&I, automatic (C)
Labor time
A4LD
2-wheel drive 3.4
4-wheel drive 5.0
C3, C5
Bronco II 5.0
Ranger
2-wheel drive (C3) 3.1
4-wheel drive (C5) 5.0
Additional time:
With transfer case skid plate, add 0.2.
C3, C5 with multi-piece drive line, add 0.2.
Transmission price
A4LD
Ranger four $1075.24
Ranger V6 ..... $1247.68
See local supplier for applications not listed.

LABOR, TIME AND PARTS PRICING GUIDE (continued)

119B. Transmission R&I, manual (C)
Labor time
4-speed
2-wheel drive
Four
Gasoline 2.7
Diesel 2.6
V6 ..... 3.4
4-wheel drive
Four 3.9
V6 ..... 5.0
5-speed
2-wheel drive
Four
Gasoline 2.7
Diesel 2.3
V6
1983-1984 ..... 3.6
1985-1986 ..... 4.0
4-wheel drive (V6) 5.0
Transmission price
5-speed V6 ..... $1399.05
5-speed Ranger diesel $1355.87
See local supplier for applications not listed.

120. Transmission overhaul, manual (B)
Labor time
4-speed
2-wheel drive
Four
Gasoline 5.4
Diesel 5.3
V6 ..... 5.9
4-wheel drive
Four 6.4
V6 ..... 7.5
5-speed
2-wheel drive
Four
Gasoline 7.8
Diesel 7.5
V6
1983-1984 ..... 8.5
1985-1986 ..... 8.8
4-wheel drive (V6) 9.6

121. Tune-up (B)
Labor time
Four 1.0
V6 ..... 1.6
Distributor cap price
1983-1985
Four $14.52
V6 ..... $17.35
1986
Bronco II (V6) $11.85
Ranger
Four
2.0L engine $15.42

ABBREVIATIONS
For full explanation of abbreviations, see the first page of this section.
Skill levels:
A. Highly skilled
B. Skilled
C. Semi-skilled
D. Low skilled
R&R: Remove and replace
R&I: Remove and install
Prices: These are manufacturer's suggested retail prices as of the date this guide was prepared.
* Indicates item discontinued by manufacturer. Price, if listed, is last available factory price.

121. Tune-up (B) (cont.)
Distributor cap price (cont.)
1986 Ranger (cont.)
Four 2.3L engine ..... Not available.
V6 engine $11.85
Rotor price
1983
Four $4.31
V6 ..... $2.75
1984
Four $4.31
V6 ..... $3.72
1985
Four $2.98
V6 ..... $3.72
1986
Bronco II
Standard trans $2.98
Auto trans $2.32
Ranger
Four
2.0L engine $4.31
2.3L engine $2.32
V6 ..... $2.32

122. Universal joint R&R (B)
Labor time
2-wheel drive
One joint 0.9
Both 1.2
4-wheel drive
To front axle
Front or rear joint 1.0
Both 1.3
To rear axle
With single cardan joints
Front joint 0.9
Rear joint 0.8
Both 1.3
With double cardan joints
Front or rear joint 1.2
Both 2.2

123. Upper ball-joint R&R (B)
See job No. 110.

124. Upper suspension arm R&R
Not applicable.

125. Upper suspension arm shaft R&R
Not applicable.

126. Valve grind, complete (A)
Labor time
Four (gasoline)
With fuel injection 8.7
Without fuel injection 7.7
V6
Right side 8.5
Left side 8.4
Both 11.6
Where air conditioning interferes, add:
Four 0.3
V6, standard trans
Right side 0.3
Left side 0.1
Both 0.4
V6, auto trans
Left side or both 0.3

127. Water pump R&R (C)
Labor time
Gasoline
Four
With air conditioning
Power steering 2.2
Non-power steering 2.0
Without air conditioning
Power steering 1.9
Non-power steering 1.6
V6 ..... 1.8
Diesel 2.2
Water pump price
1983-1984
Four
Gasoline $88.06
Diesel $58.87
V6
1983 ..... $65.66
1984 ..... $90.57
1985-1986
Gasoline
Four $88.06
V6 ..... $90.57
Diesel $47.93

128. Wiper motor R&R (C)
Labor time (front or rear) 0.6
Wiper motor price
Bronco II
Liftgate $100.91
Windshield $75.05
Ranger $75.05

OFFICIAL SERVICE HINTS

This section contains a feature exclusive to Clymer manuals—troubleshooting and service tips based on factory service bulletins. Specific problems and exact solutions are listed, together with simple, easy-to-understand repair procedures.

The section is organized by subject area. Problems, the models they apply to and solutions are described. Repair procedures are given, together with illustrations where necessary.

CHASSIS

Problem: steering column "clunk"

Models affected: 1983 Ranger, 1984 Bronco II

Condition and Cause

Some 1983 Ranger and 1984 Bronco II models may exhibit a "clunk" sound in the steering column. This condition may be caused by the steering intermediate shaft slip joint.

Repair

Install a new intermediate steering shaft (part No. 3D517).

NOTE

This procedure, which involves replacing part of the steering column, should be done by a Ford dealer or other qualified specialist.

1. Remove old intermediate shaft from vehicle. Save stone shield for reinstallation.
2. A hole must be drilled in end of lower column tube for installation of stop screw. Make sure hole is centered 5/16 in. from end of tube on small flat surface as shown. Center punch and drill a 7/32 in. diameter hole. See **Figure 1**.
3. Install a self-tapping screw into new hole and tighten to 30-50 in.-lb. (3.4-5.6 N•m). Install new intermediate shaft to steering gear. Insert new pinch bolt and tighten to 25-35 ft.-lb. (34-48 N•m).
4. Slip stone shield over upper end of intermediate shaft and slide down into position over lower coupling. Attach shield to steering gear.
5. Rotate intermediate shaft so that open yoke is up. Rotate column tube so that the stop screw is

also up. Swing intermediate shaft up over flats on lower column tube as shown.

6. Install new cross bolt so that bolt passes over flat on column tube, and square shank of bolt seats in square hole in intermediate shaft yoke. Install nut to cross bolt and tighten to 19-28 ft.-lb. (26-38 N•m). See **Figure 2.**

7. Rotate steering wheel and check clearance of upper end of intermediate shaft to surrounding components, such as clutch tube, brake lines, wiring, etc. If any of these components are within one inch of the shaft, they should be moved and held out of the way with tie straps.

Problem: steering drift or pull

Models affected: 1983-1985 Ranger 2WD

WARNING

Diagnosing and repairing this condition should be done only by a Ford dealer or qualified front-end specialist.

Condition and Cause

Some 1983-1985 Ranger 2WD vehicles may develop a steering drift or pull due to excessive side-to-side caster difference. A new design caster adjustment service kit (part No. E4TZ-3K064-A) is now available to correct this condition. This service kit will adjust side-to-side caster differences of more than 3/4 degree. This service kit will only correct vehicles with forged axles. DO NOT use this kit on vehicles with stamped axles.

Repair (forged axles)

Refer to **Figure 3** for this procedure.

The service kit consists of a template to slot the front radius rod-to-front axle mounting bolt hole and a metal cam. The metal cam is marked in increments of 1/2 degree caster change. The service kit also includes complete instructions to complete this repair.

Repair (stamped axles)

Remove the radius arm and slot the upper hole (near the spring seat). DO NOT slot the lower hole. To increase caster, twist the axle 1/8 in. to the rear and tighten the bolt.

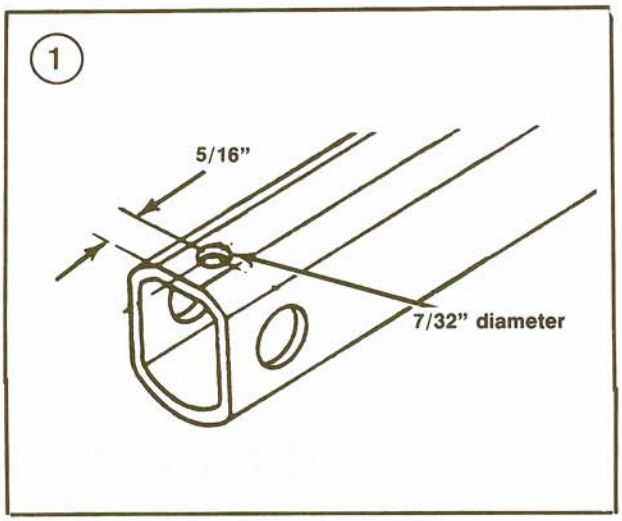

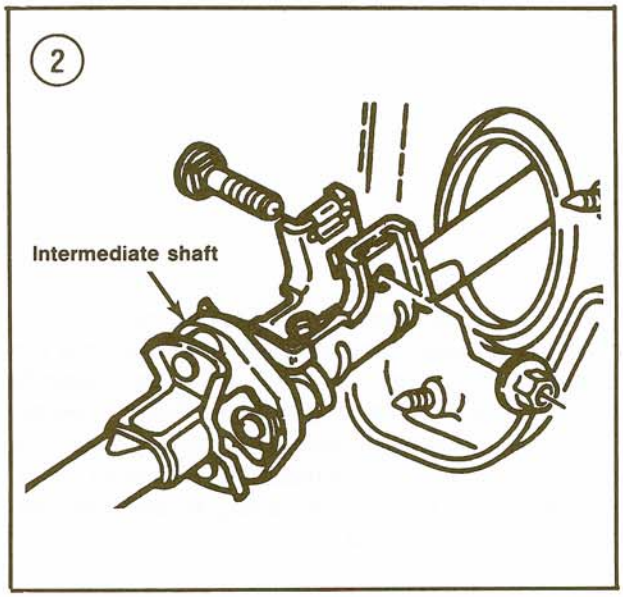

ENGINE

Problem: no power over 40 mph

Models affected—1983-1984 Ranger with 2.0L engine

Condition and Cause

Some 1983-1984 Ranger models with 2.0L engine may have no power over 40 mph. This condition may be caused by sticking valves or insufficient valve guide-to-stem clearance. New design chrome intake valves (part No. E5TZ-6507-F) and exhaust valves (E5TZ-6505-F) are now available to correct this condition.

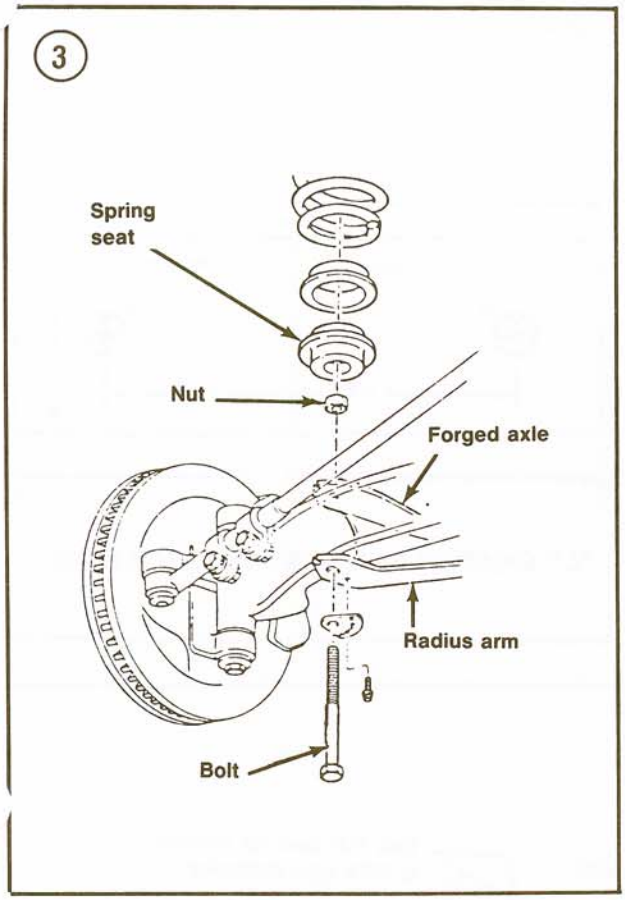

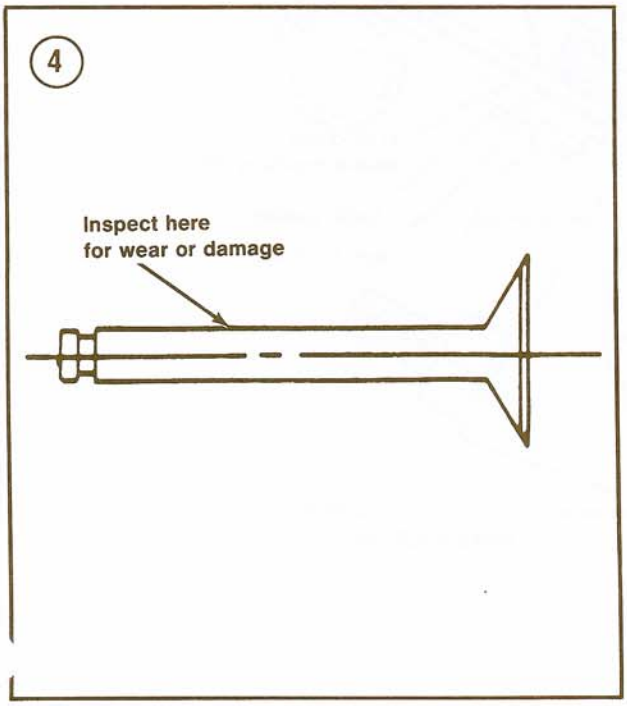

Repair

1. Remove the cylinder head. Remove the cam followers and valves. Keep all parts in order.
2. Inspect all valve stems for wear, galling, and/or-scoring. See **Figure 4**. If necessary, replace damaged valves with the new design chrome valves.
3. Ensure valve guides are clean and reamed to 0.3433-0.3443 in. (8.720-8.745 mm). Make sure that stem-to-guide clearances are as follows:
   a. Intake—0.001-0.0027 in. (0.025-0.069 mm).
   b. Exhaust—0.015-0.032 in. (0.038-0.081 mm).
4. Replace valve stem seals. Clean or replace spark plugs. Reassemble the cylinder head.

FUEL SYSTEM

Problem: exhaust rattle/converter inlet pipe fractures

Models affected: 1983 Ranger

Condition and Cause

Some 1983 Ranger models may exhibit exhaust rattle and/or MTA tube bracket-to-catalytic converter inlet pipe fractures.

Repair

1. Fabricate an L-shaped bracket from 1/8 in. stock as shown in **Figure 5**.
2. Loosely assemble the fabricated bracket and pipe clamp to the MTA tube as shown in **Figure 6**. If necessary, loosen the tube clamp.
3. Tighten clamp and bracket bolt when proper alignment is assured.

Problem: exhaust rattle at idle

Models affected: 1983 Ranger with 2.2L diesel engine

Condition and Cause

Some 1983 Ranger models with 2.2L diesel engine may exhibit an exhaust rattle at low idle speeds. This condition may be caused by the idle speed being too low, or a misaligned exhaust system. Ensure correct idle speed and exhaust system alignment. If rattle is still experienced, an exhaust steady-rest (part No. E3TZ-526-B) is now available to correct this condition.

Diagnosis

Check that the idle speed is not lower than 780 rpm. Check the exhaust system alignment by loosening the exhaust pipe at manifold and centering the system in its mounts. Alternately retighten exhaust manifold nuts to 25-35 ft.-lb. (34-47 N•m). If exhaust rattle is still experienced, install exhaust steady-rest.

Repair

Refer to **Figure 7** for this procedure.

1. Position exhaust steady-rest to flat flange joint and to right side frame rail.
2. Drill two 3/8 in. (10 mm) holes into the frame rail.
3. Remove 2 bolts from flat flange joint (use new gasket if flat flange separates) and attach steady-rest.
4. Tighten frame rail bolts to 17-24 ft.-lb. (23-33 N•m).

5

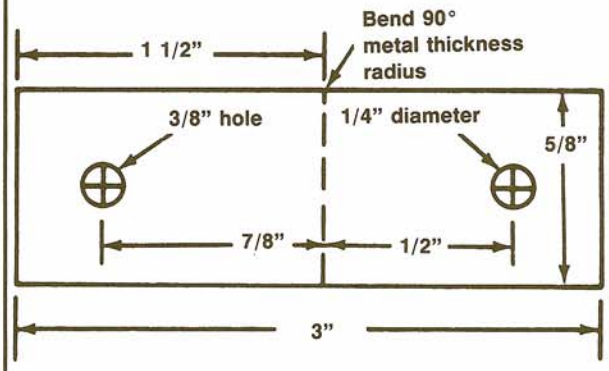

"L" SHAPED BRACKET FABRICATION

6

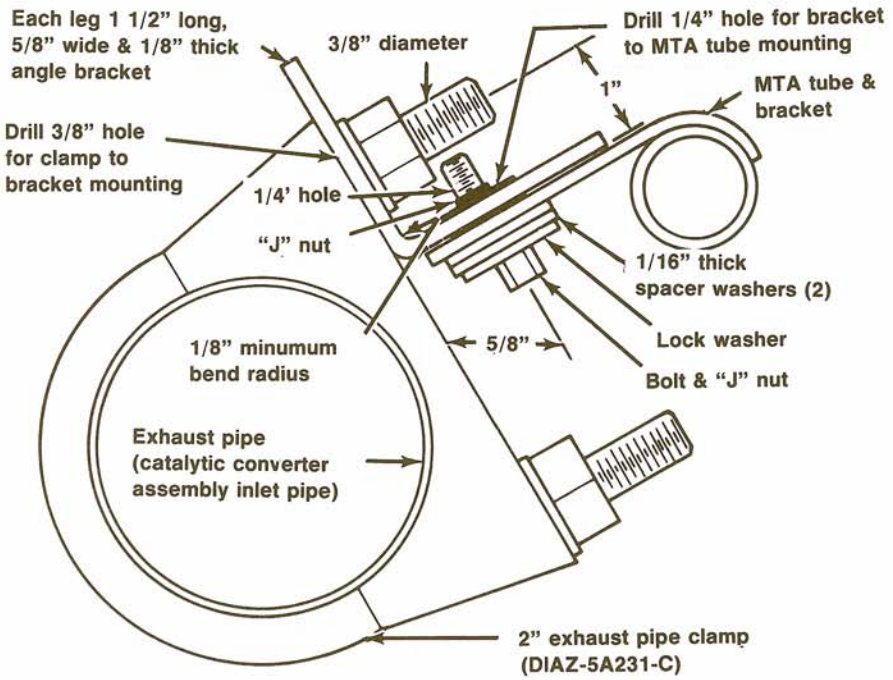

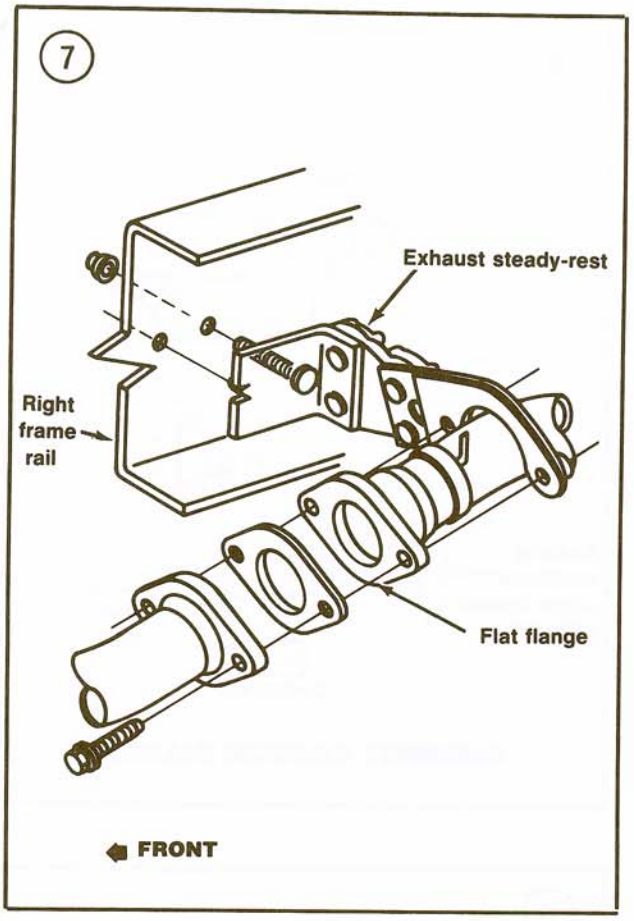

Problem: hesitation and stumble

Models affected: 1983-1984 Bronco II and Ranger with 2.8L engine

Condition and Cause

Some 1983-1984 Bronco II and Ranger models with 2.8L engine may hesitate or stumble during acceleration. This condition may be caused by low fuel bowl level or insufficient accelerator pump plunger-to-housing clearance.

Repair

1. Check and adjust the fuel bowl level to 0.81 in. (20.6 mm).

CAUTION

The next step should be done by a Ford dealer or other qualified specialist. A mistake may cost several hundred dollars for a new carburetor.

2. Check whether there is insufficient accelerator pump plunger-to-housing clearance. If necessary, use a hand reamer to enlarge the plunger hole to 0.323 in. (8.2 mm).

Problem: hesitation and stall/ carburetor icing

Models affected: 1983-1984 Bronco II and Ranger with 2.8L engine

Condition and Cause

Some 1983-1984 Ranger and Bronco II vehicles may experience hesitation and stalling in cold ambient temperatures (30-40° F) and high humidity. This condition may be caused by carburetor icing.

Repair

This condition may be rectified by performing the following air cleaner modification:
1. Replace the air cleaner shroud and the tube assembly with a new assembly (part No. E5TZ-9A603-B).
2. Replace the duct and valve assembly with a new assembly (part No. E5TZ-9A626-A).
3. Replace the duct and valve assembly-to-air cleaner gasket (part No. E1SZ-9E691-A) if damaged.

Problem: stumble after long deceleration

Models affected: 1983-1984 Ranger with 2.0L/2.3L MCU engine

Condition and Cause

Some 1983-1984 Ranger pickups with 2.0L or 2.3L MCU (microprocessor control unit) engines may develop an acceleration stumble after a long deceleration. This condition may be caused by the electronic purge control valve being open at the wrong time. A revised vacuum hose routing, new vacuum delay valve (part No. 12A-091) and mechanical purge control valve (9B963) are now available to correct this condition.

Repair

Remove the electronic purge control valve. Install the mechanical purge control valve, vacuum

delay valve and T-fitting as shown in **Figure 8** and **Figure 9**.

Service Information

Models affected: 1985 Ranger with 2.3L EFI engine

If the fuel system becomes drained during service procedures, the system must be primed as follows:

Cycle the ignition between the ON and OFF positions. The ignition should be in the ON position for 5 seconds, then turned to OFF position. Do this 20 times before attempting to start the engine. If the engine does not start after 15 seconds, repeat priming procedure.

Problem: exhaust vibration

Models affected: Bronco II and Ranger with 2.8L engine and automatic transmission.

Condition and Cause

Some 1985 Bronco II and Ranger models with 2.8L engine and automatic transmission may develop an exhaust vibration. This condition may be caused by a bound-up exhaust.

Repair

Refer to **Figure 10** for this procedure.

1. Remove and discard the bracket and insulator. Reinstall 2 bolts finger-tight. Loosen all exhaust connectors. Start the engine and shift into DRIVE. Allow engine to idle and shift back to NEUTRAL. Turn off the engine.
2. Make sure there is enough clearance between chassis and entire length of exhaust. Align flange flats at converter. Tighten converter bolts to 20-30 ft.-lb. (27-41 N•m). Tighten hanger bracket bolts to 15-20 ft.-lb. (20-37 N•m). Tighten manifold bolts to 27-37 ft.-lb. (37-50 N•m).

GENERAL SERVICING

Problem: front axle lubricant blows out fluid (4WD)

Models affected: 1983-1984 4WD Ranger

Service Information

Some 1983-1984 Ranger models with 4WD may have lubricant blow out of the front axle. This

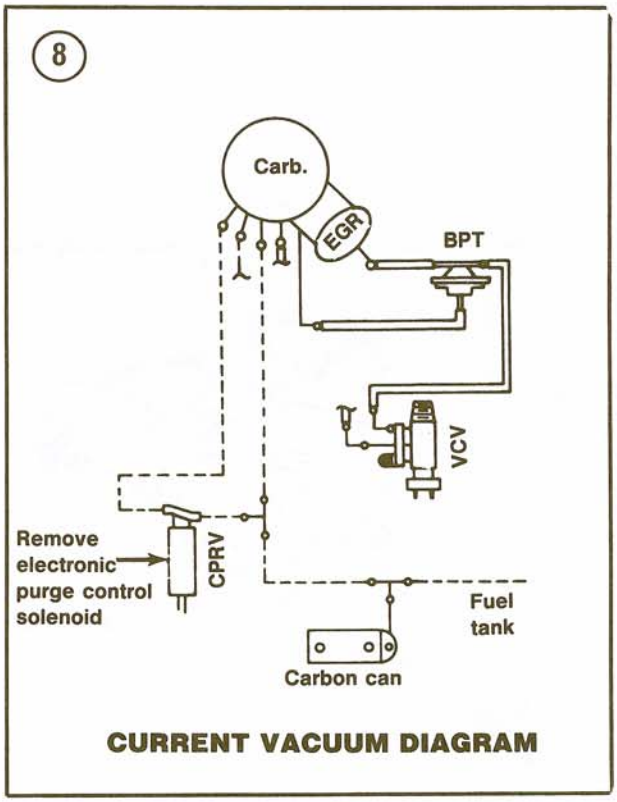

CURRENT VACUUM DIAGRAM

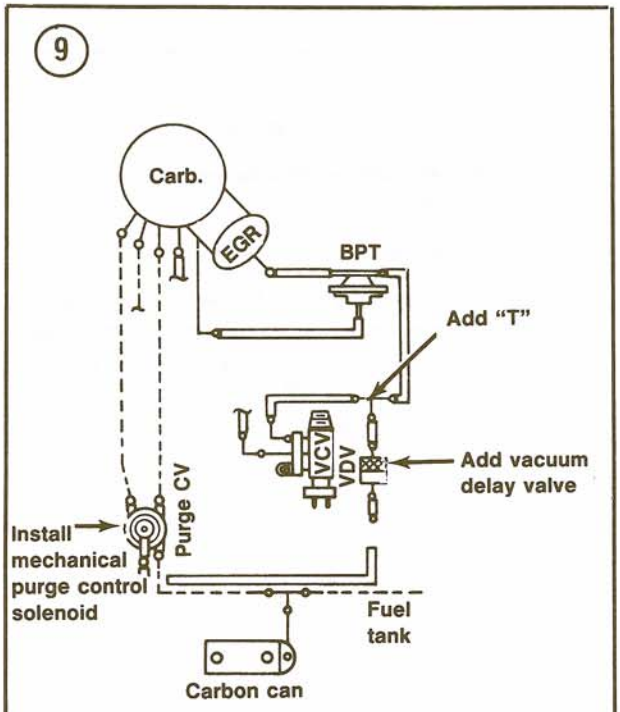

REVISED VACUUM DIAGRAM

condition may be caused by overfilling the axle. To correct this condition, remove the fill plug and ensure the lubricant level is 1/8-1/2 in. below the bottom of the fill plug hole. Remove excess fluid or fill axle to proper level.

HEATING AND AIR CONDITIONING

Service Information

Models affected: 1983 Ranger

Air Conditioning Operating Procedures

The 1983 Ranger air conditioning system has a control which includes a pushbutton switch for operating the air conditioning system. Because the compressor should not operate when the blower is OFF (cycles too fast), the control was designed to automatically prevent the button from engaging when the blower is in the OFF position and to disengage the button when the blower switch is turned OFF.

The control also includes an air door lever which has 2 positions: "VENT-HEAT A/C," which directs outside air into the system, and "MAX-A/C," which shuts off outside air and causes the air to recirculate within the passenger cab area. Effort of this lever was designed somewhat high to assure positive shutoff in each position. It should be noted that the MAX-A/C position achieves the best fuel economy when the A/C system is operating in hot weather because no outside air is being introduced and, therefore, cooling load is reduced.

TRANSFER CASE

Problem: transfer case oil pump retainer

Models affected: 1983-1985 Bronco II and Ranger 4WD

Condition and Cause

Some 1983-1985 Bronco II and Ranger models with 4-wheel drive may exhibit poor oil pump

(10)

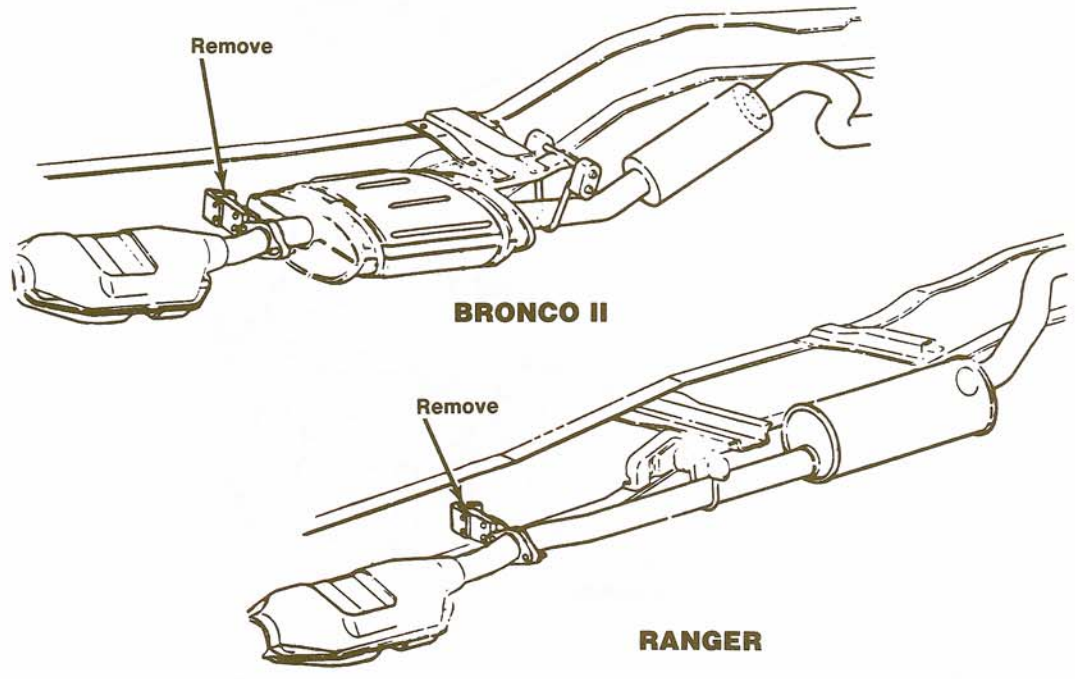

retention or interference from the transfer case oil pump. This condition may be caused by the transfer case oil pump retainer. A revised oil pump retainer (part No. E3TZ-73215-A) is now available to correct this condition. See **Figure 11**.

Repair

Remove the transfer case. Separate the case and remove the output shaft. Inspect the oil pump retainer leg design. If the retainer plate is straight or has a 90° twist, replace it with the new design type.

TRANSMISSION

Problem: shift lever pulls off

Models affected: 1984 Bronco II with manual transmission/transfer case and floor mounted shift lever.

Condition and Cause

Some 1984 Bronco II models with manual transmission/transfer case and floor mounted shift lever may experience the shift lever knob pulling off. This condition may be caused by damage to the shift lever knob (part No. E2TZ-7213-B). This damage may be caused by the shift lever knob knurling being oversized or undersized. New design shift levers are available to correct this problem.

Diagnosis

Refer to **Figure 12** for this procedure.

Remove the plastic shift pattern from the shift knob. Using a wooden block and hammer, remove the shift knob. Check shift knob for damage. Measure the diameter of the shift lever knurling. The diameter should be between 0.578-0.594 in. (14.7-15.1 mm).

Repair

Refer to **Figure 12** for this procedure.

1. If necessary, replace the shift lever. Part numbers are:
   a. Toyo Kogyo 4-speed—E3TZ-7210-A.
   b. Toyo Kogyo 5-speed—E4TZ-7210-C.

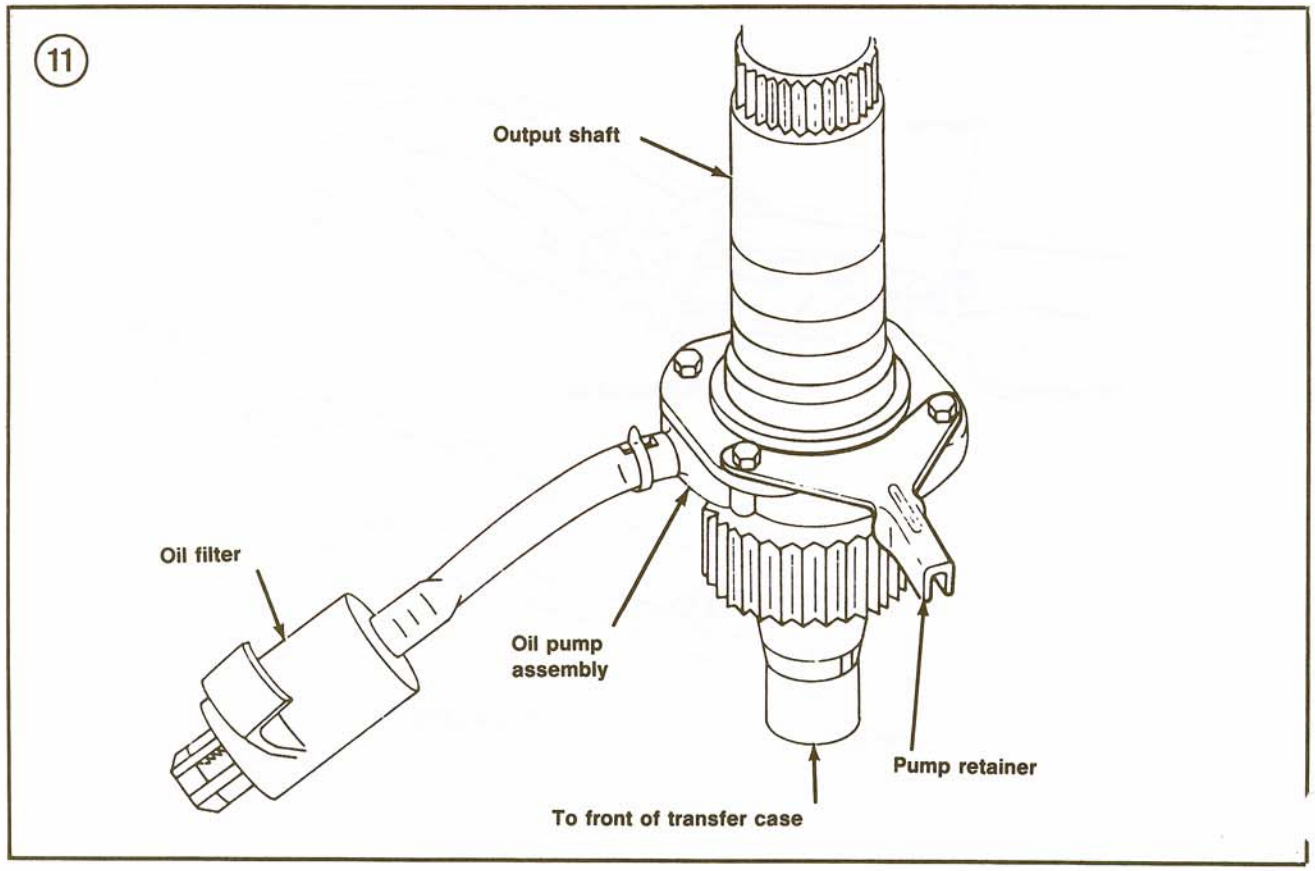

(12)

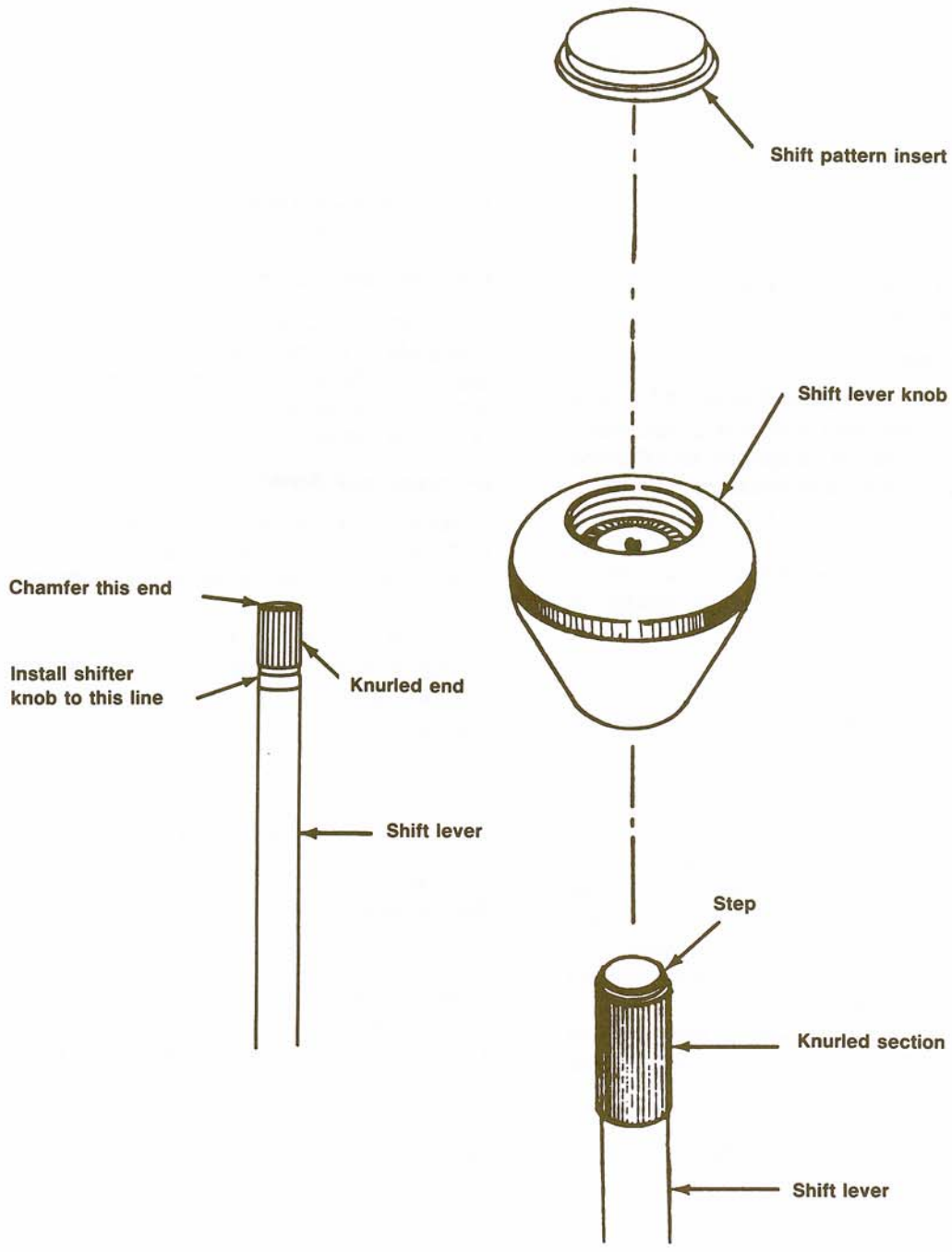

SHIFT LEVER ASSEMBLY

c. Borg Warner 13-50 transfer case—E3TZ-7210-K.

2. To install the shift lever knob, chamfer the end ofthe shift lever with a file or hand grinder. Warm the shift lever knob to 140-180° F (60-82° C).

3. Using a 7/16 in. socket and rubber or plastic hammer, tap shift lever knob onto shift lever. Stop when the bottom of the shift lever knob is even with the shift lever taper.

Problem: fluid leak at vent tube

Models affected: 1983-1985 Bronco II and Ranger 4WD with C5 or A4LD automatic transmission

Condition and Cause

When some 1983-1985 Ford Ranger 4WD and Bronco II models with the C5 or A4LD automatic transmission are overfilled, subjected to extended driving, operated in high temperatures or used in trailer towing, they may exhibit fluid leakage at the vent tube rubber hose. This condition can be caused by swelling or looseness. If a vehicle exhibits any of these conditions and leakage is apparent, repair as follows.

Repair

1. Make sure the transmission fluid leakage is originating at the left rear of the transmission case (in the vent fitting area). Check the transmission vent tube fitting for swelling, looseness or any evidence of transmission fluid on the hose.

2. If the hose is swollen, loose or is contaminated with transmission fluid, remove and discard the vent hose. If during servicing of the transmission for other repairs it is evident that the vent tube hose has been contaminated with transmission fluid, the hose should also be replaced.

3. Replace the affected hose with a new piece of hose (part No. E3TZ 7A246 F). Cut hose to 2.5 in. (63.5 mm).

TUNE-UP AND EMISSIONS

Problem: engine lope and/or misfiring

Models affected: 1983-1984 Ranger with 2.0L engine

Condition and Cause

Some 1983-1984 Ranger models with 2.0L engine may exhibit engine lope and/or misfiring. This condition may be caused by fouled spark plugs.

Repair

The condition may be corrected by replacing the spark plugs (Motorcraft No. AWSF-42) with part No. AWSF-52.

Problem: tapping noise

Models affected: 1984 Bronco II and Ranger with 2.8L engine

Condition and Cause

If a tapping noise from the engine compartment is audible in the passenger compartment, it may be caused by the EGR solenoid assembly. The noise will be more noticeable in temperatures of 30° F (81° C) or below.

Diagnosis and Repair

1. Remove EGR solenoid assembly (part No. E37E-9D474-E2A). Solenoid is located on the engine control housing, mounted on the right-hand fender apron.

2. Install a new EGR solenoid assembl (E3TZ-9D474-G) in engine control housing. New unit has a black plastic housing. Ensure that all vacuum hose and wire connections are secure and routed properly.

Problem: surging, hesitation or high idle speed

Models affected: 1985 Bronco II and Ranger models with EEC-IV

Condition and Cause

Some 1985 Bronco II and Ranger models with EEC-IV may exhibit surging, hesitation or high idle speed. This condition may be the normal learning or self-adjustment period of the EEC-IV electronic system.

Service Information

Whenever the battery is disconnected or any EEC-IV component is disconnected or replaced, the vehicle may exhibit poor driveability for about 5 miles. This is considered normal.

If trouble persists, turn all accessories OFF. Operate vehicle for 2 minutes at idle speed in NEUTRAL (manual transmission) or DRIV (automatic). Turn air conditioning (if so equipped)

ON for 2 more minutes. Drive vehicle for 5 minutes through stop-and-go city traffic.

Problem: surge or "bucking"

Models affected: 1983-1985 Bronco II and Ranger with 2.8L engine

Condition and Cause

Some 1983-1985 Bronco II and Ranger models with 2.8L engine may develop a surge or "buck." This condition will occur only in vehicles with an electronic EGR control system. This condition may be due to carburetor cleaner or starting fluid coming in contact with the EGR solenoid valve.

Repair

1. To correct this condition, remove the vacuum hoses from the EGR solenoid valves. If any fluid is in evidence, replace the solenoid and install a filter (part No. E5TZ-9F474-A). Install the filter on the metal port of the EGR solenoid in place of the original vacuum hose.
2. Obtain a rubber cap (part No. 382444-S) and vacuum hose connector (383003-S). Install the rubber cap and connector on the end of the removed vacuum hose.

WHEEL BEARINGS

Problem: keyway separation from cam assembly in automatic hub locks

Models affected: 1984 Bronco II and Ranger 4WD

Service Information

Some 1984 Bronco II and Ranger 4WD models equipped with automatic locking hubs may develop a keyway separation from the cam assembly. A new design service kit (part No. 1A053) is available to correct this condition.

Repair

Refer to **Figure 13** for this procedure.
1. Before removal, look into the spindle keyway under the adjusting nut hole and remove any portion of the locking key that has separated from the cam assembly. This will prevent damage to the spindle threads when removing the adjusting nut.
2. If such separation is present, the cam assembly must be replaced. Discard entire cam assembly and replace with the new design service kit.
3. Care must be taken when aligning spindle nut adjustment hole with center of spindle keyway slot to prevent damage to cam assembly locking key.

(13)

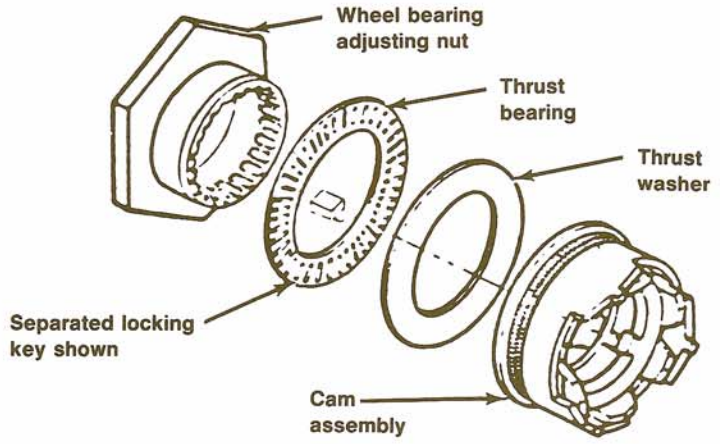

WHEEL BEARING ADJUSTING NUT ASSEMBLY

NOTES

NOTES

NOTES

FORD
2- & 4-Wheel Drive
Ranger & Bronco II · 1983-1987

This easy-to-use manual can save you hundreds of dollars in maintenance and repair bills. Step-by-step procedures and detailed illustrations guide you through every job. Inside, you'll find:

Quick Reference Data
All the most frequently used specs on specially marked pages.

General Information
Tools, techniques and shop safety.

Troubleshooting
Easy-to-follow charts guide you from symptoms to causes.

Lubrication and Maintenance
All the tasks required by vehicle warranty.

Tune-up
Procedures and specifications for gasoline and diesel engines.

Engine
Complete overhaul procedures for all inline and V6 gasoline engines used in this series.

Fuel, Exhaust and Emission Control Systems
Air cleaner testing and replacement; carburetor overhaul, adjustment and replacement; all fuel injection system procedures practical for home mechanics; gasoline fuel pump testing and replacement; emission control system testing and replacement.

Cooling, Heating and Air Conditioning Systems
Service and replacement procedures for radiator, thermostat, water pump and heater; air conditioning system maintenance.

Electrical System
Testing and replacement procedures for battery, charging system, starter, ignition system, lighting system, switches, turn signals, windshield wipers and washers, horn, fuses and fusible links.

Clutch and Transmission
Complete clutch service; manual transmission adjustment, overhaul and replacement, automatic transmission adjustment and replacement.

Transfer Case
Complete, detailed teardown and rebuild for all transfer cases used by Ford.

Suspension, Wheel Bearings, Hubs and Steering
Removal, inspection and installation procedures for suspension components; front wheel bearing adjustment and replacement; front hub removal, inspection and installation; removal and installation for steering components.

Axles, Drive Shafts and Differentials
Drive axle and steering knuckle removal and installation; axle housing removal and installation; differential removal, inspection and installation; drive shaft repair and replacement.

Brakes
Complete overhaul and adjustment procedures, for disc and drum brakes.

Body
Replacement procedures for bolt-on parts.

Index
Reference and cross-reference to all major sections of book.

Time, Skill Level and Parts Pricing Guide
Labor time, skill level and parts price information lets you estimate job times and costs the same way professional mechanics do.

0 24185 10894

CLYMER PUBLICATIONS