MITSUBISHI MOTORS

# Service Manual

Vol 1

## CHASSIS AND BODY

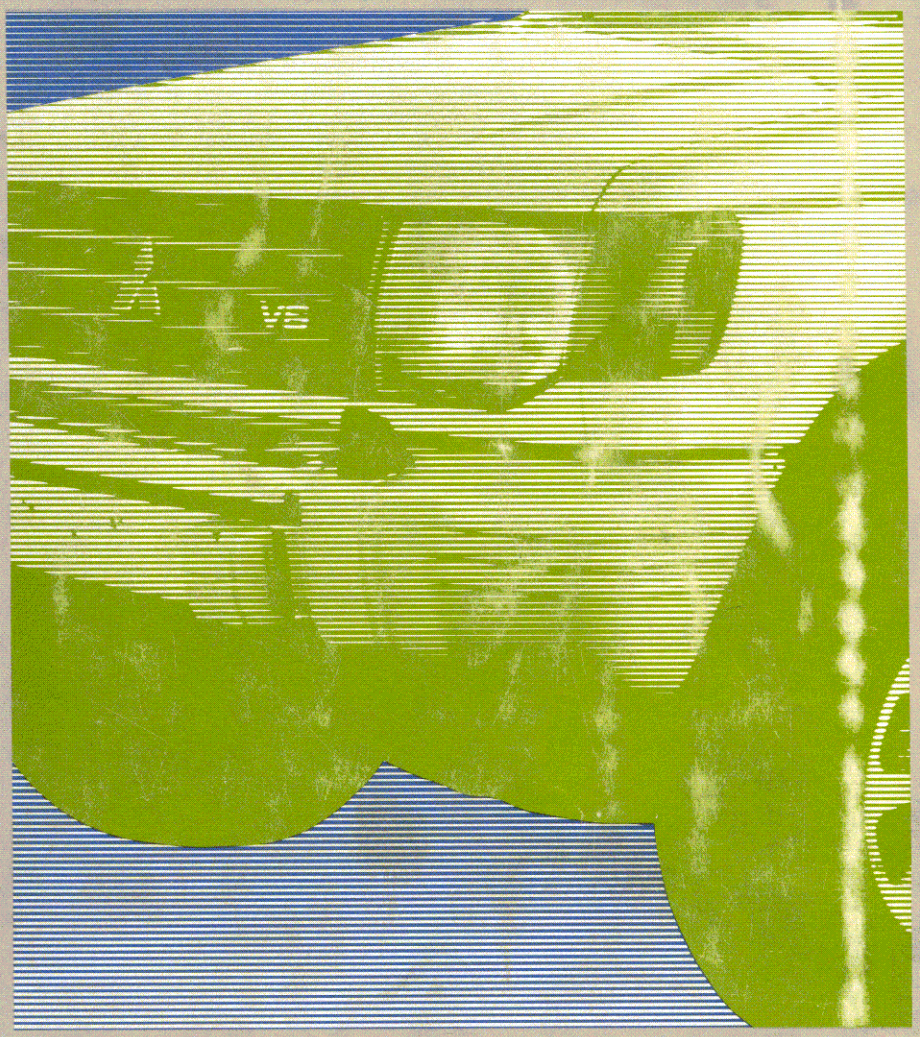

1996

# MONTERO

*Includes Engine & Transmission Overhaul*

# WARNINGS REGARDING SERVICING OF SUPPLEMENTAL RESTRAINT SYSTEM (SRS) EQUIPPED VEHICLES

**WARNING!**

**(1) Improper service or maintenance of any component of the SRS, or any SRS-related component, can lead to personal injury or death to service personnel (from inadvertent firing of the air bag) or to the driver and passenger (from rendering the SRS inoperative).**

**(2) If it is possible that the SRS components are subjected to heat over 93°C (200°F) in baking or in drying after painting, remove the SRS components (air bag module, SRS diagnosis unit, front impact sensors) beforehand.**

**(3) Service or maintenance of any SRS component or SRS-related component must be performed only at an authorized MITSUBISHI dealer.**

**(4) MITSUBISHI dealer personnel must thoroughly review this manual, and especially its GROUP 52B – Supplemental Restraint System (SRS), before beginning any service or maintenance of any component of the SRS or any SRS-related component.**

NOTE

Section titles with the asterisks (*) in the table of contents in each group indicate operations requiring warnings.

# Service Manual

# MONTERO

## 1996
## Volume 1
## Chassis & Body

*Includes Engine & Transmission Overhaul*

## FOREWORD

This Service Manual has been prepared with the latest service information available at the time of publication. It is subdivided into various group categories and each section contains diagnosis, disassembly, repair, and installation procedures along with complete specifications and tightening references. Use of this manual will aid in properly performing any servicing necessary to maintain or restore the high levels of performance and reliability designed into these outstanding vehicles.




MITSUBISHI
MOTOR SALES OF AMERICA, Inc.

Mitsubishi Motors Corporation reserves the right to make changes in design or to make additions to or improvements in its products without imposing any obligations upon itself to install them on its products previously manufactured.

© 1995 Mitsubishi Motors Corporation

Printed in Japan

## GROUP INDEX

00109000133


| | |
|---|---|
| General | 00 |
| Engine | 11 |
| Fuel | 13 |
| Engine Cooling | 14 |
| Intake and Exhaust | 15 |
| Engine and Emission Control | 17 |
| Clutch | 21 |
| Manual Transmission | 22 |
| Automatic Transmission | 23 |
| Propeller Shaft | 25 |
| Front Axle | 26 |
| Rear Axle | 27 |
| Wheel and Tire | 31 |
| Power Plant Mount | 32 |
| Front Suspension | 33 |
| Rear Suspension | 34 |
| Service Brakes | 35 |
| Parking Brakes | 36 |
| Steering | 37 |
| Body | 42 |
| Exterior | 51 |
| Interior and Supplemental Restraint System (SRS) | 52 |
| Heater, Air Conditioning and Ventilation | 55 |
| Alphabetical Index | |


NOTE: Electrial system information is contained in Volume 2 "Electrical" of this paired Service Manual.

# GENERAL

## CONTENTS

00109000140


**GENERAL DATA AND SPECIFICATIONS ... 26**
**HOW TO USE THIS MANUAL ..... 3**
- Explanation of Manual Contents ..... 4
- Explanation of the Troubleshooting Guide ..... 6
- Maintenance, Repair and Servicing Explanations ..... 3
- Model Indications ..... 3
- Special Tool Note ..... 3
- Terms Definition ..... 3
- Tightening Torque Indication ..... 3

**HOW TO USE TROUBLESHOOTING/ INSPECTION SERVICE POINTS ..... 7**
**LUBRICATION AND MAINTENANCE ..... 29**
**MAIN SEALANT AND ADHESIVE TABLE ... 53**
**MAINTENANCE SERVICE ..... 37**
- Air Cleaner Element ..... 37
- Automatic Transmission ..... 43
- Automatic Transmission Fluid ..... 44
- Ball Joint and Steering Linkage Seals ..... 46
- Ball Joints with Grease Fitting ..... 47
- Brake Hoses ..... 46
- Disc Brake Pads ..... 46
- Distributor Cap and Rotor ..... 39
- Drive Belts ..... 40
- Drive Shaft Boots ..... 46
- Engine Coolant ..... 45
- Engine Oil ..... 41
- Engine Oil Filter ..... 41
- Evaporative Emission Control System (Except Canister) ..... 37
- Exhaust System (Connection Portion of Muffler, Pipings and Converter Heat Shields) ..... 48
- Front Axle and Rear Axle ..... 47
- Fuel Hoses ..... 37
- Fuel System ..... 37
- Ignition Cables ..... 39
- Manual Transmission ..... 42
- Propeller Shaft Joints ..... 48
- Rear Axle Oil (Limited-Slip Differential) ..... 47
- Spark Plugs ..... 39
- SRS Maintenance ..... 48
- Timing Belt ..... 39
- Transfer ..... 44

**PRECAUTIONS BEFORE SERVICE ..... 18**
- Applying Anti-corrosion Agent or Other Undercoat Agents ..... 19
- Scan Tool (MUT-II) ..... 19
- Servicing Electrical System ..... 18
- Supplemental Restraint System (SRS) ..... 18
- Vehicle Washing ..... 19

**RECOMMENDED LUBRICANTS AND LUBRICANT CAPACITIES TABLE ..... 31**
**SCHEDULED MAINTENANCE TABLE ..... 34**
**TIGHTENING TORQUE ..... 28**
**TOWING AND HOISTING ..... 23**
**TREATMENT BEFORE/AFTER THE FORDING OF A STREAM ..... 20**
**VEHICLE IDENTIFICATION ..... 14**
- Chassis Number ..... 16
- Engine Model Stamping ..... 17
- Vehicle Identification Code Chart Plate ..... 14
- Vehicle Identification Number Location ..... 14
- Vehicle Identification Number List ..... 15
- Vehicle Information Code Plate ..... 16
- Vehicle Safety Certification Label ..... 17

NOTES

# HOW TO USE THIS MANUAL

00100010128

## MAINTENANCE, REPAIR AND SERVICING EXPLANATIONS

This manual provides explanations, etc. concerning procedures for the inspection, maintenance, repair and servicing of the subject model. Unless otherwise specified, each service procedure covers all models. Procedures covering specific models are identified by the model codes, or similar designation (engine type, transaxle type, etc.). A description of these designations is covered in this manual under "VEHICLE IDENTIFICATION".

### SERVICE ADJUSTMENT PROCEDURES

"Service adjustment procedures" are procedures for performing inspections and adjustments of particularly important locations with regard to the construction and for maintenance and servicing, but other inspections (for looseness, play, cracking, damage, etc. ) must also be performed.

### SERVICE PROCEDURES

The service steps are arranged in numerical order and attention must to be paid in performing vehicle service are described in detail in SERVICE POINTS.

## TERMS DEFINITION

### STANDARD VALUE

Indicates the value used as the standard for judging the quality of a part or assembly on inspection or the value to which the part or assembly is corrected and adjusted. It is given by tolerance.

### LIMIT

Shows the standard for judging the quality of a part or assembly on inspection and means the maximum or minimum value within which the part or assembly must be kept functionally or in strength. It is a value established outside the range of standard value.

### REFERENCE VALUE

Indicates the adjustment value prior to starting the work (presented in order to facilitate assembly and adjustment procedures, and so they can be completed in a shorter time).

### CAUTION

Indicates the presentation of information particularly vital to the worker during the performance of maintenance and servicing procedures in order to avoid the possibility of injury to the worker, or damage to component parts, or a reduction of component or vehicle function or performance, etc.

## TIGHTENING TORQUE INDICATION

The tightening torque shown in this manual is a basic value with a tolerance of + 10% except the following cases when the upper and lower limits of tightening torque are given.

(1) The tolerance of the basic value is within + 10%.
(2) Special bolts or the like are in use.
(3) Special tightening methods are used.

## SPECIAL TOOL NOTE

Only MMC special tool part numbers are called out in the repair sections of this manual. Please refer to the special tool cross reference chart, which is located in the service manual at the beginning of each group, for a cross reference from the MMC special tool number to the special tool number that is available in your market.

## MODEL INDICATIONS

The following abbreviations are used in this manual for classification of model types.

M/T: Indicates manual transmission, or models equipped with manual transmission.
A/T: Indicates automatic transmission, or models equipped with automatic transmission.
MFI: Indicates multiport fuel injection, or engines equipped with multiport fuel injection.
A/C: Indicates air conditioning.
3.0L Engine: Indicates the 3.0 $dm^3$ (181.3 cu.in.) <6G72> engine, or a model equipped with such an engine.
3.5L Engine: Indicates the 3.5 $dm^3$ (213.4 cu.in.) <6G74> engine, or a model equipped with such an engine.

## EXPLANATION OF MANUAL CONTENTS

Indicates procedures to be performed before the work in that section is started, and procedures to be performed after the work in that section is finished.

**Component Diagram**

A diagram of the component parts is provided near the front of each section in order to give the reader a better understanding of the installed condition of component parts.

Indicates (by symbols) where lubrication is necessary.

**Maintenance and Servicing Procedures**

The numbers provided within the diagram indicate the sequence for maintenance and servicing procedures.

- Removal steps :
  The part designation number corresponds to the number in the illustration to indicate removal steps.
- Disassembly steps :
  The part designation number corresponds to the number in the illustration to indicate disassembly steps.
- Installation steps :
  Specified in case installation is impossible in reverse order of removal steps. Omitted if installation is possible in reverse order of removal steps.
- Reassembly steps :
  Specified in case reassembly is impossible in reverse order of disassembly steps. Omitted if reassembly is possible in reverse order of disassembly steps.

**Classifications of Major Maintenance / Service points**

When there are major points relative to maintenance and servicing procedures (such as essential maintenance and service points, maintenance and service standard values, information regarding the use of special tools, etc.), these are arranged together as major maintenance and service points and explained in detail.

◀A▶ : Indicates that there are essential points for removal or disassembly.

▶A◀ : Indicates that there are essential points for installation or reassembly.

**Symbols for Lubrication, Sealants and Adhesives**

Information concerning the locations for lubrication and for application of sealants and adhesives is provided, by using symbols, in the diagram of component parts or on the page following the component parts page, and explained.

- : Grease (multipurpose grease unless there is a brand or type specified)
- : Sealant or adhesive
- : Brake fluid or automatic transmission fluid
- : Engine oil, gear oil or air conditioner compressor oil
- : Adhesive tape or butyl rubber tape

**TSB Revision**

Indicates the group title.

Indicates the section title.

Indicates the group number.

Indicates the page number.

STEERING – Power Steering Gear Box 37A-23

## POWER STEERING GEAR BOX

110000526

### REMOVAL AND INSTALLATION

**Pre-removal Operation**
- Power Steering Fluid Draining (Refer to P.37A-15.)
- Stabilizer Bar Removal (Refer to GROUP 33A – Stabilizer Bar)

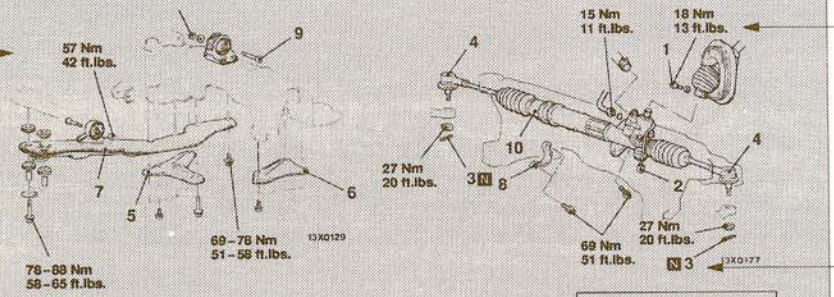


Denotes tightening torque.

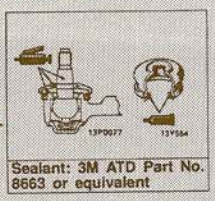


Sealant: 3M ATD Part No. 8663 or equivalent




Steering gear seal kit

Denotes non-reusable part.

Repair kit or set parts are shown. (Only very frequently used parts are shown.)

**Removal steps**
1. Joint assembly and gear box connecting bolt
2. Solenoid valve connector <Vehicles with EPS>
3. Cotter pin
- ◀A▶ ▶A◀ 4. Connection for tie-rod end and knuckle
5. Stay (L.H.)
6. Stay (R.H.)
7. Center member assembly
8. Clamp
- ◀B▶ 9. Bolt
- ◀C▶ 10. Gear box assembly

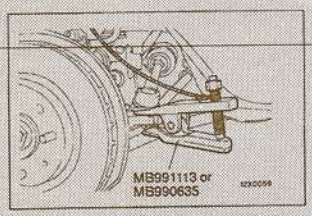


### REMOVAL SERVICE POINTS

◀A▶ TIE-ROD END DISCONNECTION

Caution
1. Be sure to tie the cord of the special tool to the nearby part.
2. Loosen the nut but do not remove it.

Operating procedures, cautions, etc. on removal, installation, disassembly and reassembly are described.

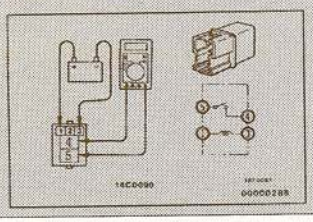


### FOG LIGHT RELAY CONTINUITY CHECK

| Battery voltage | Terminal | | | |
|---|---|---|---|---|
| | 1 | 3 | 4 | 5 |
| Power is not supplied | ○ | ○ | | |
| Power is supplied | ⊖ | ⊖ | ○ | ○ |

○—○ indicates that there is continuity between the terminals.
⊕—⊖ indicates terminals to which battery voltage is applied.

37A-28 STEERING – Power Steering Gear Box

### LUBRICATION AND SEALING POINTS

<Conventional power steering gear box>

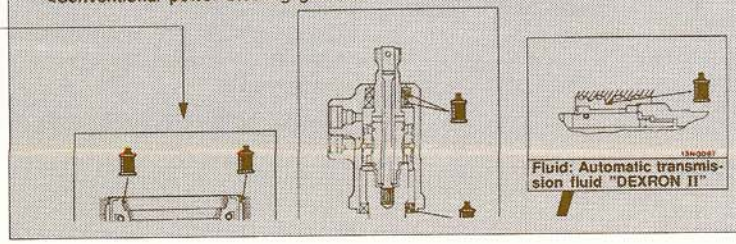


The title of the page (following the page on which the diagram of Component parts is presented) indicating the locations of lubrication and sealing procedures.

**TSB Revision**

## EXPLANATION OF THE TROUBLESHOOTING GUIDE

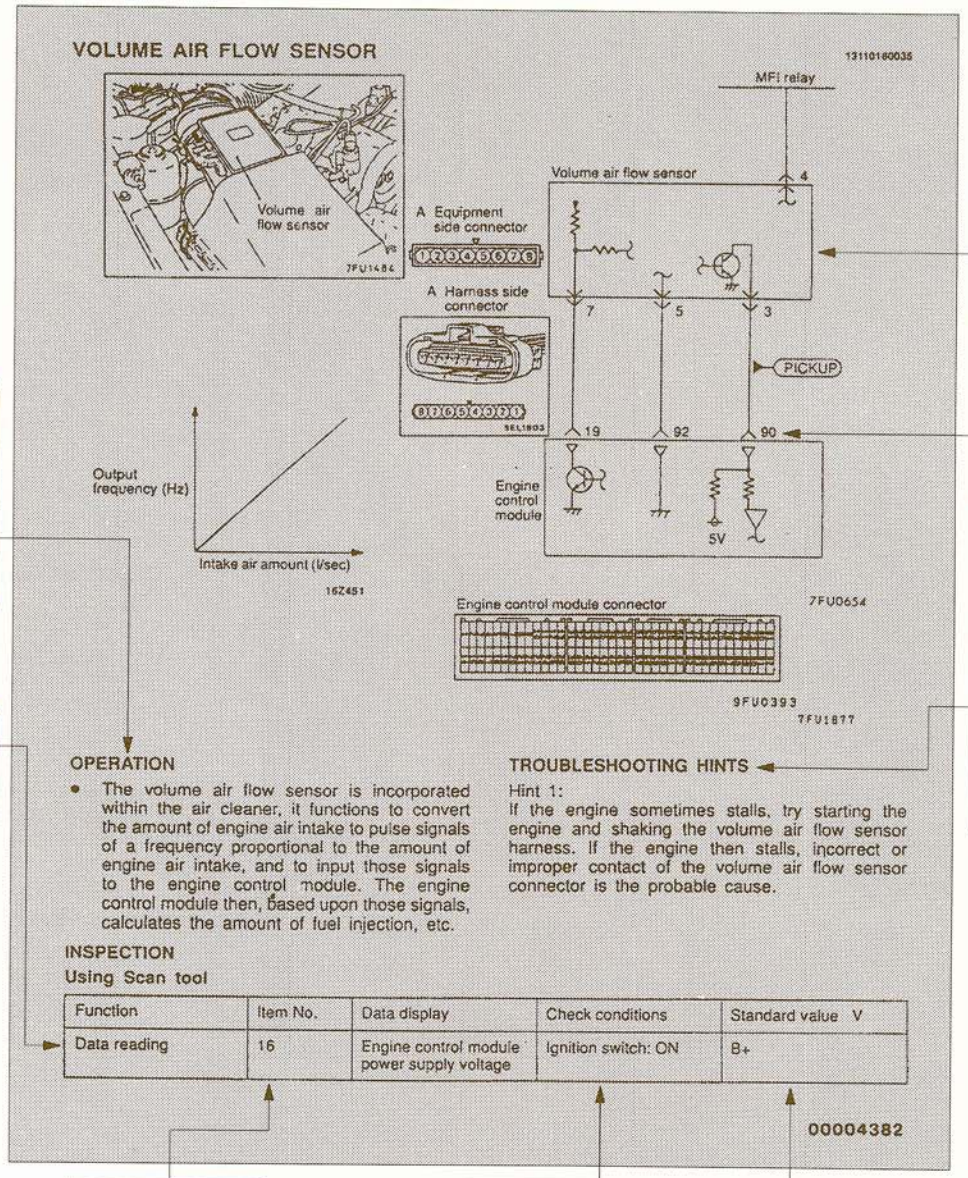


Indicates the circuit diagram for checking.

Indicates a connector terminal number.

Provides hints (including standards for judgement) when troubleshooting procedures are followed.

Provides the necessary description of circuit operation for basic understanding.

Indicates the check to be made.

Indicates the item to be checked.

Indicates the conditions under which the check should be made.

Indicates the specification to be used for judgement of the check results.
If there is no particular mention of conditions in the "Check Conditions" column, the column shows the specifications under normal conditions.

**TSB Revision**

# HOW TO USE TROUBLESHOOTING/INSPECTION SERVICE POINTS

00100020053

Troubleshooting of electronic control systems for which the scan tool can be used follows the basic outline described below. Furthermore, even in systems for which the scan tool cannot be used, part of these systems still follow this outline.

## TROUBLESHOOTING CONTENTS

### 1. STANDARD FLOW OF DIAGNOSTIC TROUBLESHOOTING

The main procedures for diagnostic troubleshooting are shown.

### 2. SYSTEM OPERATION AND SYMPTOM VERIFICATION TESTS

If verification of the trouble symptoms is difficult, procedures for checking operation and verifying trouble symptoms are shown.

### 3. DIAGNOSTIC FUNCTION

The following diagnostic functions are shown.
- Method of reading diagnostic trouble codes
- Method of erasing diagnostic trouble codes
- Input inspection service points

### 4. INSPECTION CHART FOR DIAGNOSTIC TROUBLE CODES

### 5. NSPECTION PROCEDURE FOR DIAGNOSTIC TROUBLE CODES

Indicates the inspection procedures corresponding to each diagnostic trouble code. (Refer to P.00-9.)

### 6. INSPECTION CHART FOR TROUBLE SYMPTOMS

If there are trouble symptoms, even though the results of inspection using the scan tool show that all diagnostic trouble codes are normal, inspection procedures for each trouble symptom will be found by means of this chart.

### 7. INSPECTION PROCEDURE FOR DIAGNOSTIC SYMPTOM

Indicates the inspection procedures corresponding to each trouble symptoms classified in the Inspection Chart for Trouble Symptoms. (Refer to P.00-9.)

### 8. SERVICE DATA REFERENCE TABLE

Inspection items and normal judgement values have been provided in this chart as reference information.

### 9. CHECK AT ECU TERMINALS

Terminal numbers for the ECU connectors, inspection items and standard values have been provided in this chart as reference information.

**Terminal Voltage Checks**

1. Connect a needle-nosed wire probe or paper clip to a voltmeter probe.
2. Insert the needle-nosed wire probe into each of the ECU connector terminals from the wire side, and measure the voltage while referring to the check chart.

NOTE
1. Measure voltage with the ECU connectors connected.
2. You may find it convenient to pull out the ECU to make it easier to reach the connector terminals.
3. Checks don't have to be carried out in the order given in the chart.

**Caution**
**Short-circuiting the positive (+) probe between a connector terminal and ground could damage the vehicle wiring, the sensor, the ECU, or all three. Use care to prevent this !**

3. If voltage readings differ from Normal Condition values, check related sensors, actuators, and wiring, then replace or repair.
4. After repair or replacement, recheck with the voltmeter to confirm that the repair has corrected the problem.

### Terminal Resistance and Continuity Checks

1. Turn the ignition switch to off.
2. Disconnect the ECU connector.
3. Measure the resistance and check for continuity between the terminals of the ECU harness-side connector while referring to the check chart.

   NOTE
   Checks don't have to be carried out in the order given in the chart.

   **Caution**
   **If resistance and continuity checks are performed on the wrong terminals, damage to the vehicle wiring, sensors, ECU, and/or ohmmeter may occur. Use care to prevent this!**
4. If the ohmmeter shows any deviation from the Normal Condition value, check the corresponding sensor, actuator and related electrical wiring, then repair or replace.
5. After repair or replacement, recheck with the ohmmeter to confirm that the repair has corrected the problem.

## 10. INSPECTION PROCEDURES USING AN OSCILLOSCOPE

When there are inspection procedures using an oscilloscope, these are listed here.

## HOW TO USE THE INSPECTION PROCEDURES

The causes of a high frequency of problems occurring in electronic circuitry are generally the connectors, components, the ECU and the harnesses between connectors, in that order. These inspection procedures follow this order, and they first try to discover a problem with a connector or a defective component.

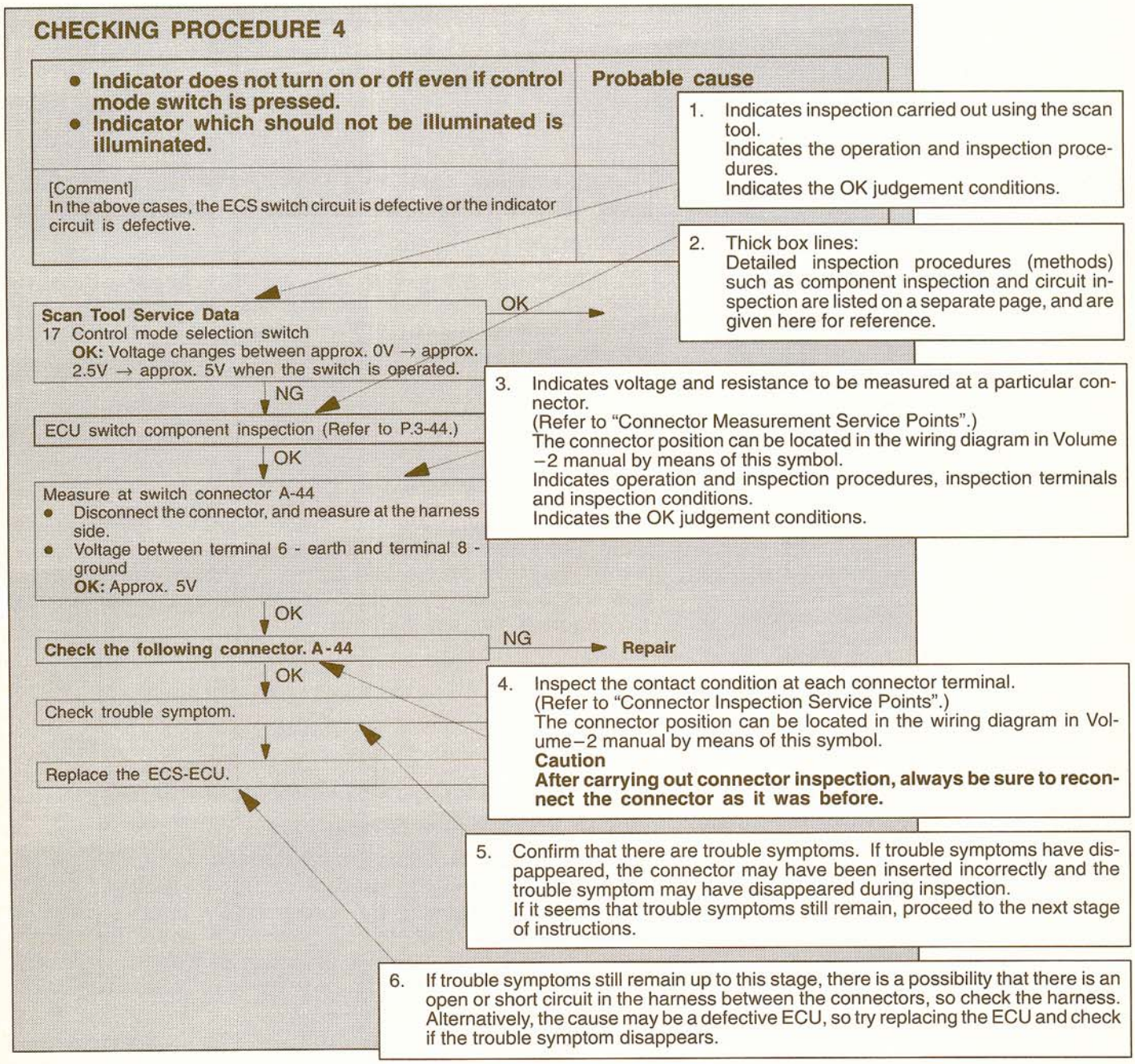


### HARNESS INSPECTION

Check for an open or short circuit in the harness between the terminals which were defective according to the connector measurements. Carry out this inspection while referring to Volume 2 Electrical manual. Here, "Check harness between power supply and terminal xx" also includes checking for blown fuses. For inspection service points when there is a blown fuse, refer to "Inspection Service Points for a Blown Fuse."

### MEASURES TO TAKE AFTER REPLACING THE ECU

If the trouble symptoms have not disappeared even after replacing the ECU, repeat the inspection procedure from the beginning.

**TSB Revision**

## CONNECTOR MEASUREMENT SERVICE POINTS

Turn the ignition switch to OFF when connecting and disconnecting the connectors, and turn the ignition switch to ON when measuring if there are no instructions to the contrary.

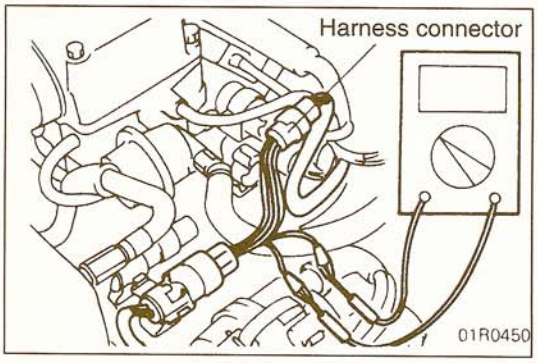


### IF INSPECTING WITH THE CONNECTOR CONNECTED (WITH CIRCUIT IN A CONDITION OF CONTINUITY)

#### Waterproof Connectors

Be sure to use the special tool (harness connector). Never insert a test probe from the harness side, because to do so will reduce the waterproof performance and result in corrosion.

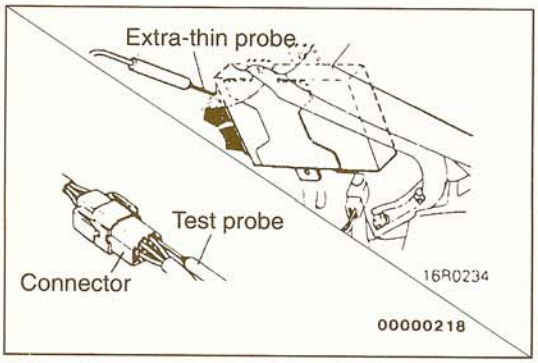


#### Ordinary (non-waterproof) Connectors

Check by inserting the test probe from the harness side. Note that if the connector (control unit, etc.) is too small to permit insertion of the test probe, it should not be forced; use a special tool (the extra–thin probe in the harness set for checking) for this purpose.

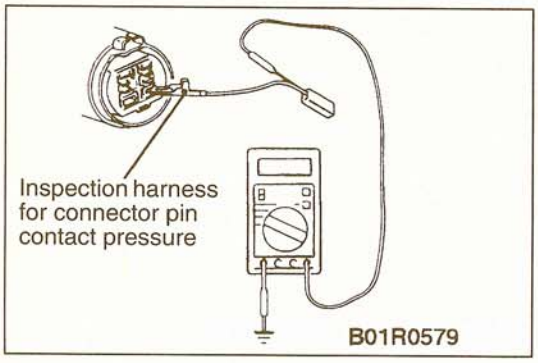


### IF INSPECTING WITH THE CONNECTOR DISCONNECTED

#### <When Inspecting a Female Pin>

Use the special tool (inspection harness for connector pin contact pressure in the harness set for inspection).
The inspection harness for connector pin contact pressure should be used. The test probe should never be forcibly inserted, as it may cause a defective contact.

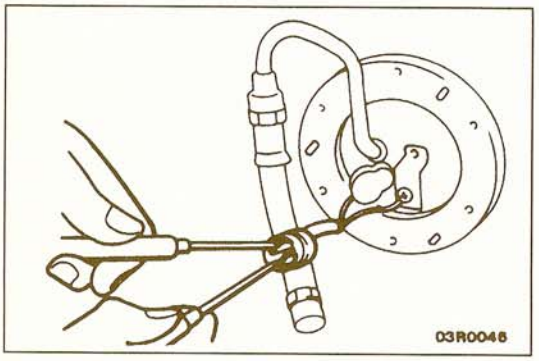


#### <When Inspecting a Male Pin>

Touch the pin directly with the test bar.

**Caution**
**At this time, be careful not to short the connector pins with the test probes. To do so may damage the circuits inside the ECU.**

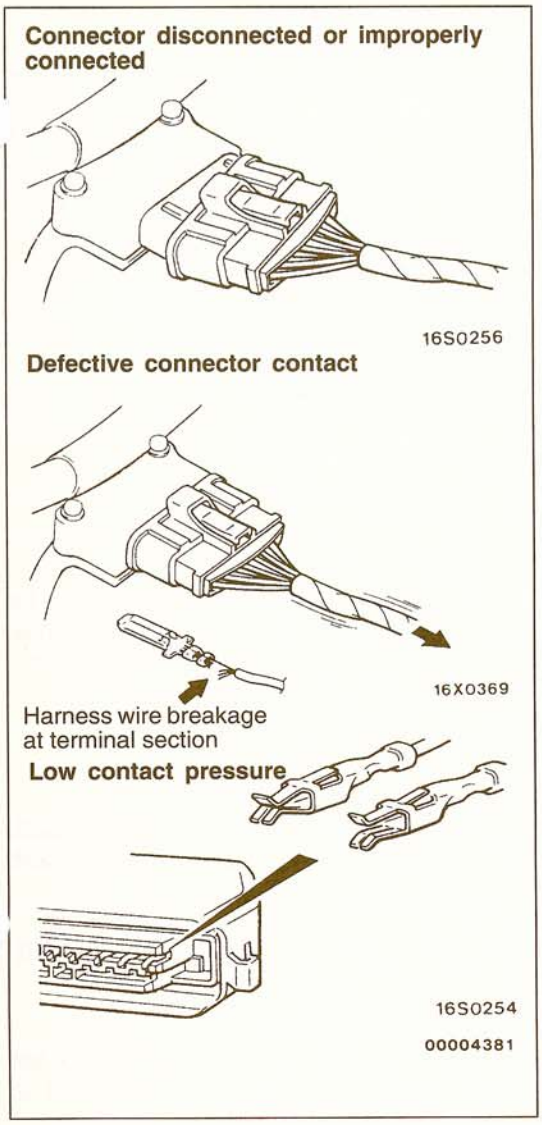


## CONNECTOR INSPECTION SERVICE POINTS

### VISUAL INSPECTION

- Connector is disconnected or improperly connected
- Connector pins are pulled out
- Due to harness tension at terminal section
- Low contact pressure between male and female terminals
- Low connection pressure due to rusted terminals or foreign matter lodged in terminals

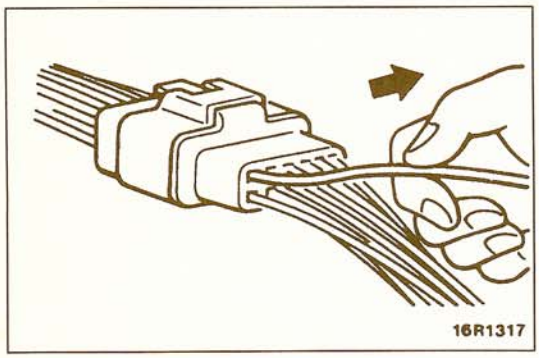


### CONNECTOR PIN INSPECTION

If the connector pin stopper is damaged, the terminal connections (male and female pins) will not be perfect even when the connector body is connected, because the pins may pull out of the back side of the connector. Therefore, gently pull the wires one by one to make sure that no pins pull out of the connector.

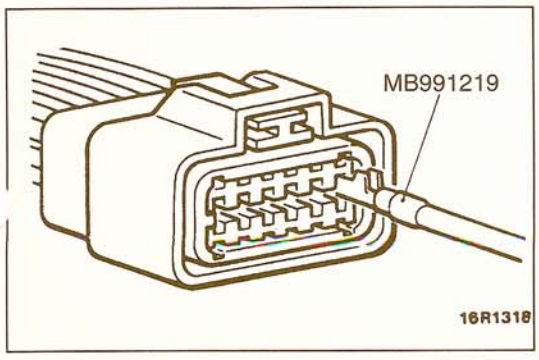


### CONNECTOR ENGAGEMENT INSPECTION

Use the special tool (connector pin connection pressure inspection harness of the inspection harness set) to inspect the engagement of the male pins and female pins. [Pin drawing force : 1 N (.2 lbs.) or more]

## HOW TO COPE WITH INTERMITTENT MALFUNCTIONS

Most intermittent malfunctions occur under certain conditions. If those conditions can be identified, the cause will be easier to find.

**TO COPE WITH INTERMITTENT MALFUNCTION;**

1. **Ask the customer about the malfunction**

   Ask what it feels like, what it sounds like, etc. Then ask about driving conditions, weather, frequency of occurrence, and so on.

2. **Determine the conditions from the customer's responses**

   Typically, almost all intermittent malfunctions occur from conditions like vibration, temperature and/or moisture change, poor connections. From the customer's replies, it should be reasoned which condition is influenced.

3. **Use simulation test**

   In the cases of vibration or poor connections, use the simulation tests below to attempt to duplicate the customer's complaint. Determine the most likely circuit(s) and perform the simulation tests on the connectors and parts of that circuit(s). Be sure to use the inspection procedures provided for diagnostic trouble codes and trouble symptoms.
   For temperature and/or moisture conditions related intermittent malfunctions, using common sense, try to change the conditions of the suspected circuit components, then use the simulation tests below.

4. **Verify the intermittent malfunction is eliminated**

   Repair the malfunctioning part and try to duplicate the condition(s) again to verify the intermittent malfunction has been eliminated.

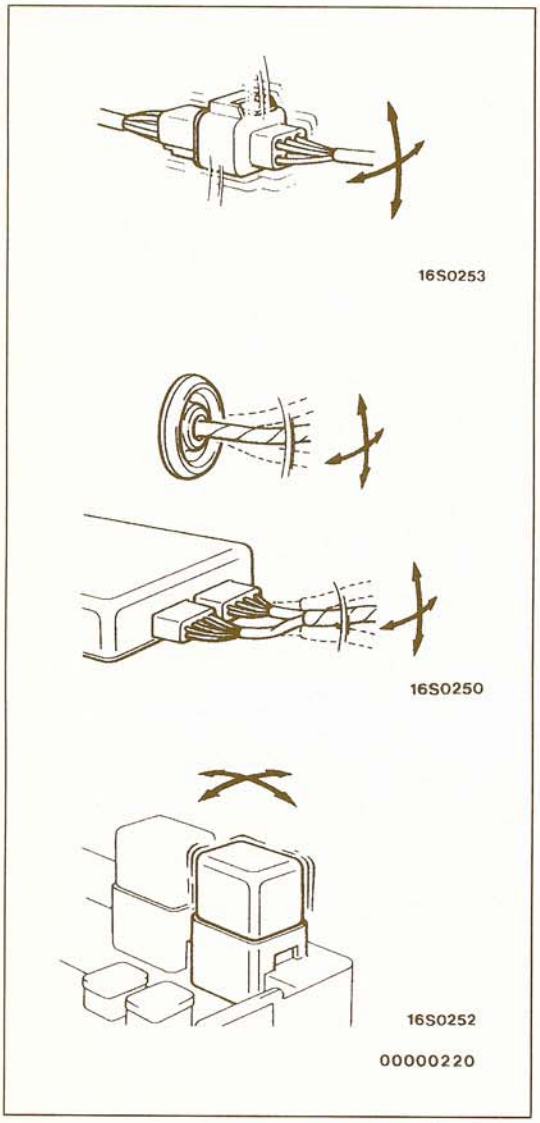


### SIMULATION TESTS

For these simulation tests, shake, then gently bend, pull, and twist the wiring of each of these examples to duplicate the intermittent malfunction.

- Shake the connector up-and-down, and right-and-left.
- Shake the wiring harness up-and-down, and right-and-left.
- Vibrate the part or sensor.

NOTE
In case of difficulty in finding the cause of the intermittent malfunction, the data recorder function in the scan tool is effective.

TSB Revision

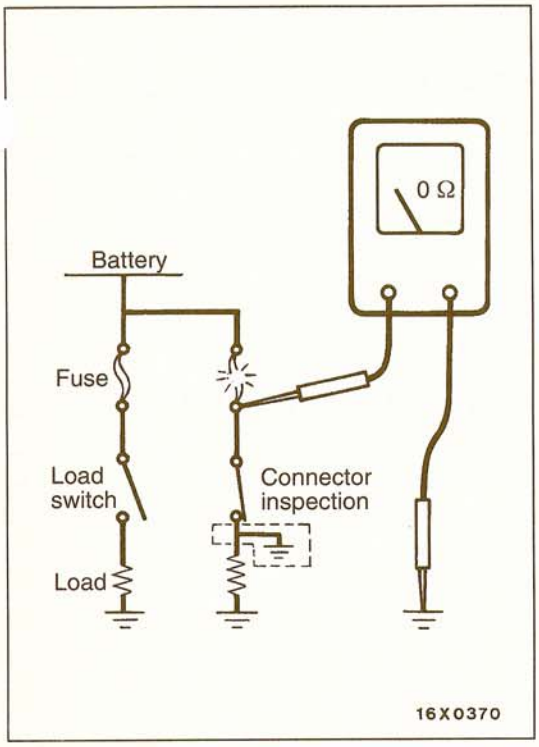


## INSPECTION SERVICE POINTS FOR A BLOWN FUSE

Remove the fuse and measure the resistance between the load side of the fuse and ground. Set the switches of all circuits which are connected to this fuse to a condition of continuity. If the resistance is almost 0 Ω at this time, there is a short somewhere between these switches and the load. If the resistance is not 0 Ω, there is no short at the present time, but a momentary short has probably caused the fuse to blow.

The main causes of a short circuit are the following.

- Harness being clamped by the vehicle body
- Damage to the outer casing of the harness due to wear or heat
- Water getting into the connector or circuitry
- Human error (mistakenly shorting a circuit, etc.)

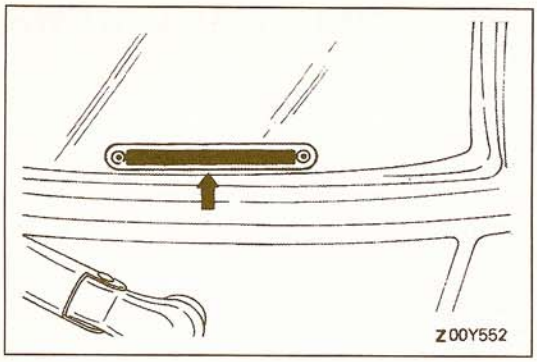


# VEHICLE IDENTIFICATION

00100040059

## VEHICLE IDENTIFICATION NUMBER LOCATION

The vehicle identification number (V.I.N.) is located on a plate attached to the left top side of the instrument panel.

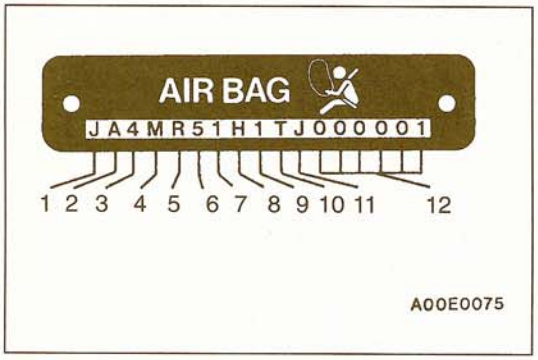


## VEHICLE IDENTIFICATION CODE CHART PLATE

All vehicle identification numbers contain 17 digits. The vehicle number is a code which tells country, make, vehicle type, etc.

| No. | Items | Contents |
|---|---|---|
| 1 | Country | J; Japan |
| 2 | Make | A; Mitsubishi |
| 3 | Vehicle type | 4; Multi-purpose vehicle |
| 4 | Others | M: 5001– 6000lbs. and with hydraulic brakes |
| 5 | Line | R; MONTERO |
| 6 | Price class | 3; Medium |
| | | 4; High |
| | | 5; Premium |
| 7 | Body | 1; 5-door wagon |
| 8 | Engine | H; 3.0dm$^3$ (181.3 cu.in.) |
| | | M; 3.5dm$^3$ (213.4 cu.in.) |
| 9 | Check digits * | 0, 1, 2, 3, · · · · · 9, X |
| 10 | Model year | T; 1996 year |
| 11 | Plant | J; Nagoya – 3 |
| 12 | Serial number | 000001 to 999999 |

NOTE

* Check digit means a singls number or letter X used to verify the accuracy of transcription of vehicle identification number.

## VEHICLE IDENTIFICATION NUMBER LIST

00100550026

### FEDERAL

| V.I.N. (except sequence number) | Brand | Engine displacement | Model code |
|---|---|---|---|
| JA4MR31H★TJ | MITSUBISHI MONTERO | 2,972cm$^3$ (181.3 cu.in.) | V43WNDEL2M |
| | | | V43WRDEL2M |
| JA4MR41H★TJ | | | V43WNHVL2M |
| | | | V43WRHVL2M |
| | | | V43WRHEL2M |
| JA4MR51H★TJ | | | V43WGRXEL2M |
| JA4MR51M★TJ | | 3,497 cm$^3$ (213.4 cu.in.) | V45WGRXML2M |

### CALIFORNIA

| V.I.N.(except sequence number) | Brand | Engine displacement | Model code |
|---|---|---|---|
| JA4MR41H★TJ | MITSUBISHI MONTERO | 2,972 cm$^3$ (181.3 cu.in.) | V43WNHVL7M |
| | | | V43WRHVL7M |
| JA4MR51M★TJ | | 3,497 cm$^3$ (213.4 cu.in.) | V45WGRXML7M |

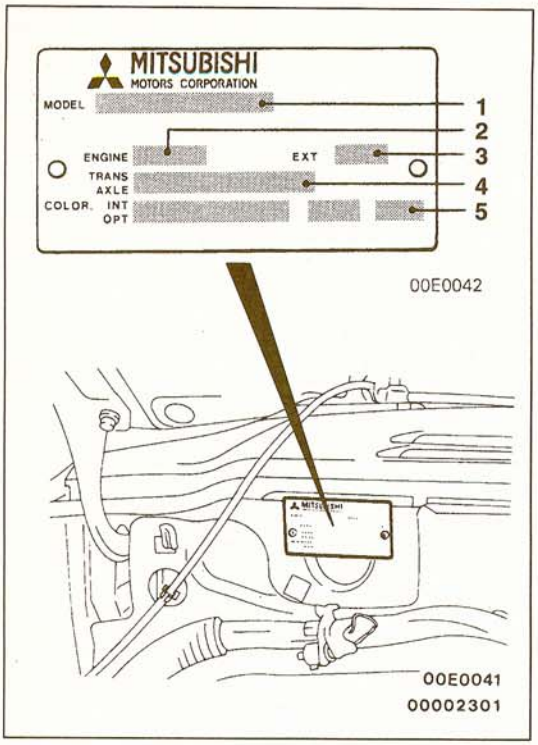


## VEHICLE INFORMATION CODE PLATE

The vehicle information code plate is riveted onto the cowl top outer panel in the engine compartment.
The plate shows model code, engine model, transmissio. model and body color code.

| No. | Items | Contents | |
|---|---|---|---|
| 1 | MODEL | V43WG RXEL2M | V43WG; Vehicle model |
| | | | RXEL2M; Model series |
| 2 | ENGINE | 6G72 | Engine model |
| 3 | EXT | CA6A | Exterior code |
| 4 | TRANS AXLE | V4AW2 4875 | V4AW2; Transmission model |
| | | | 4875; Rear differential reduction |
| 5 | COLOR, INT OPT | R25 87V 03V | R25; Body color code |
| | | | 87V; Interior code |
| | | | 03V; Equipment code |

For monotone color vehicles, the body color code shall be indicated. For two-tone or three -way two-tone vehicles, each color code only shall be indicated in series.

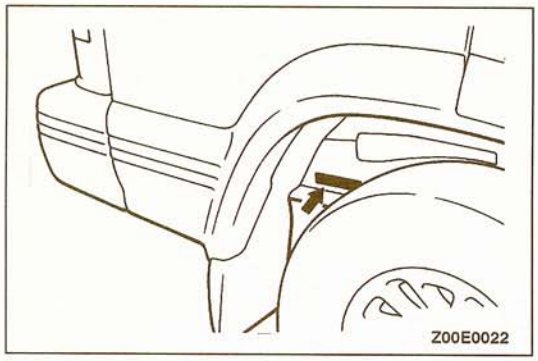


## CHASSIS NUMBER

### STAMPING LOCATION

The chassis number is stamped on the side of the frame near the right rear wheel.

### CHASSIS NUMBER CODE CHART

| Chassis number code | Contents | |
|---|---|---|
| V43W NJ000001 | V43; Vehicle line | V43; MONTERO (3.0dm$^3$ Engine) |
| | | V45; MONTERO (3.5dm$^3$ Engine) |
| | W; Body type | W; Wagon |
| | NJ000001; Refer to 10th thru 17th digits of V.I.N. plate | |

**TSB Revision**

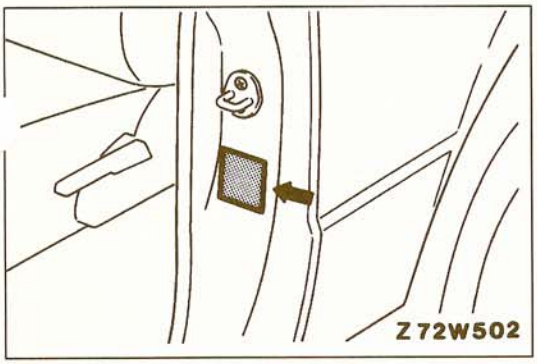


## VEHICLE SAFETY CERTIFICATION LABEL

The vehicle safety certification label is attached to the face of the left door pillar.
This label indicates the month and year of manufacture, Gross Vehicle Weight Rating (G.V.W.R.), front and rear Gross Axle Weight Rating (G.A.W.R.), and Vehicle Identification Number (V.I.N.).

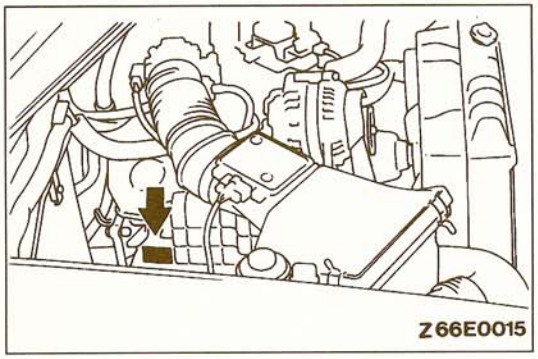


## ENGINE MODEL STAMPING

The engine model is stamped at the right rear of the top of the cylinder block.
These engine model numbers are as shown as follows.

| Engine model | Engine displacement |
|---|---|
| 6G72 | 2,972 $cm^3$ (181.3 cu.in.) <3.0L engine> |
| 6G74 | 3,497 $cm^3$ (213.4 cu.in.) <3.5L engine> |

The engine serial number is stamped near the engine model number.

# PRECAUTIONS BEFORE SERVICE

00100050052

## SUPPLEMENTAL RESTRAINT SYSTEM (SRS)

1. Items to follow when servicing SRS
   (1) Be sure to read GROUP 52B – Supplemental Restraint System (SRS).
   For safe operation, please follow the directions and heed all warnings.
   (2) Always use the designated special tools and test equipment.
   (3) Wait at least 60 seconds after disconnecting the battery cable before doing any further work. The SRS system is designed to retain enough voltage to deploy the air bag even after the battery has been disconnected. Serious injury may result from unintended air bag deployment if work is done on the SRS system immediately after the battery cable is disconnected.
   (4) Never attempt to disassemble or repair the SRS components (SRS diagnosis unit, air bag module and clock spring). If there is a defect, replace the defective part.
   (5) Warning labels must be heeded when servicing or handling SRS components. Warning labels can be found in the following locations.
   - Hood
   - Sun visor
   - Glove box
   - SRS diagnosis unit
   - Steering wheel
   - Air bag module
   - Clock spring
   - Front impact sensor
   - Frame on side of steering gear box

   (6) Store components removed from the SRS in a clean and dry place. The air bag module should be stored on a flat surface and placed so that the pad surface is facing upward.
   (7) Be sure to deploy the air bag before disposing of the air bag module or disposing of a vehicle equipped with an air bag. (Refer to GROUP 52B – Air Bag Module Disposal Procedures.)
   (8) Whenever you finish servicing the SRS, check the SRS warning light operation to make sure that the system functions properly.
2. Observe the following when carrying out operations on places where SRS components are installed, including operations not directly related to the SRS air bag.
   (1) When removing or installing parts, do not allow any impact or shock to the SRS components.
   (2) SRS components should not be subjected to temperatures of over 93°C (200°F), so remove the SRS components before drying or baking the vehicle after painting.
   After re-installing them, check the SRS warning light operation to make sure that the system functions properly.

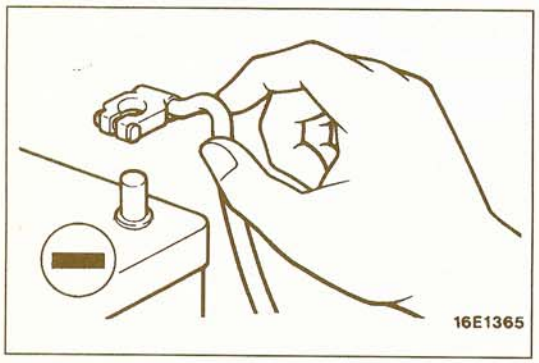


## SERVICING ELECTRICAL SYSTEM

1. Note the following before proceeding with work on the electrical system.
   Note that the following must never be done:
   Unauthorized modifications of any electrical device or wiring. Because such modifications might lead to a vehicl malfunction, over-capacity or short-circuit that could resul in a fire in the vehicle.
2. When servicing the electrical system, disconnect the negative cable terminal from the battery.

TSB Revision

**Caution**

1. **Before connecting or disconnecting the negative cable, be sure to turn off the ignition switch and the lighting switch.**
   **(If this is not done, there is the possibility of semiconductor parts being damaged.)**
2. **After completion of the work steps (when the negative battery terminal is connected), warm up the engine and allow it to idle for approximately 15 minutes under the conditions described below in order to stabilize engine control conditions, and then check to be sure that the idling is satisfactory.**

   **Engine coolant temperature:**
   **85°–95°C (185–203°F)**

   **Lights and all accessories: OFF**

   **Transmission:**
   **neutral position (Automatic transmission models: N or P)**

   **Steering wheel: straight–forward position**

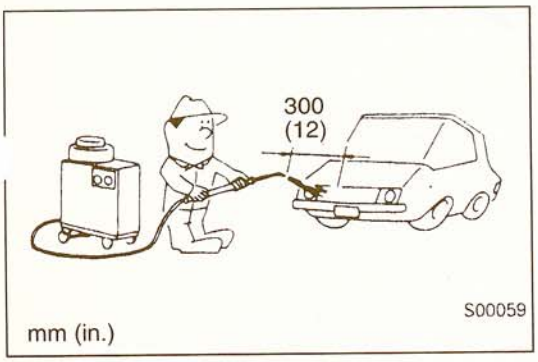


## VEHICLE WASHING

If high-pressure car-washing equipment or steam car-washing equipment is used to wash the vehicle, be sure to maintain the spray nozzle at a distance of at least 300 mm (12 in.) from any plastic parts and all opening parts (doors, luggage compartment, etc).

## APPLYING ANTI-CORROSION AGENT OR OTHER UNDERCOAT AGENTS

Be careful not to adhere oil or grease to the heated oxygen sensor. If adhered, the sensor may malfunction.
Protect the heated oxygen sensor with a cover before applying anti-corrosion agent, etc.

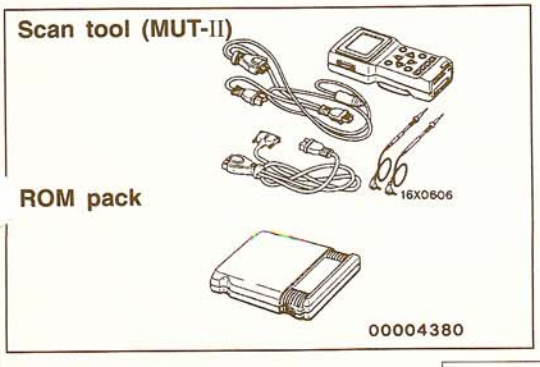


## SCAN TOOL (MUT-II)

To operate the scan tool, refer to "MUT-II Operating Instructions."

**Caution**
**Connection and disconnection of the scan tool should always be carried out with the ignition switch in the OFF position.**

# TREATMENT BEFORE/AFTER THE FORDING OF A STREAM

00100060017

## INSPECTION AND SERVICE BEFORE FORDING A STREAM

Vehicles which are driven through water, or which may possibly be driven through water, should be subjected to the following inspections and maintenance procedures in advance.

- Inspect the dust boots and breather hose for cracks or damage, and replace them if cracks of damage are found.

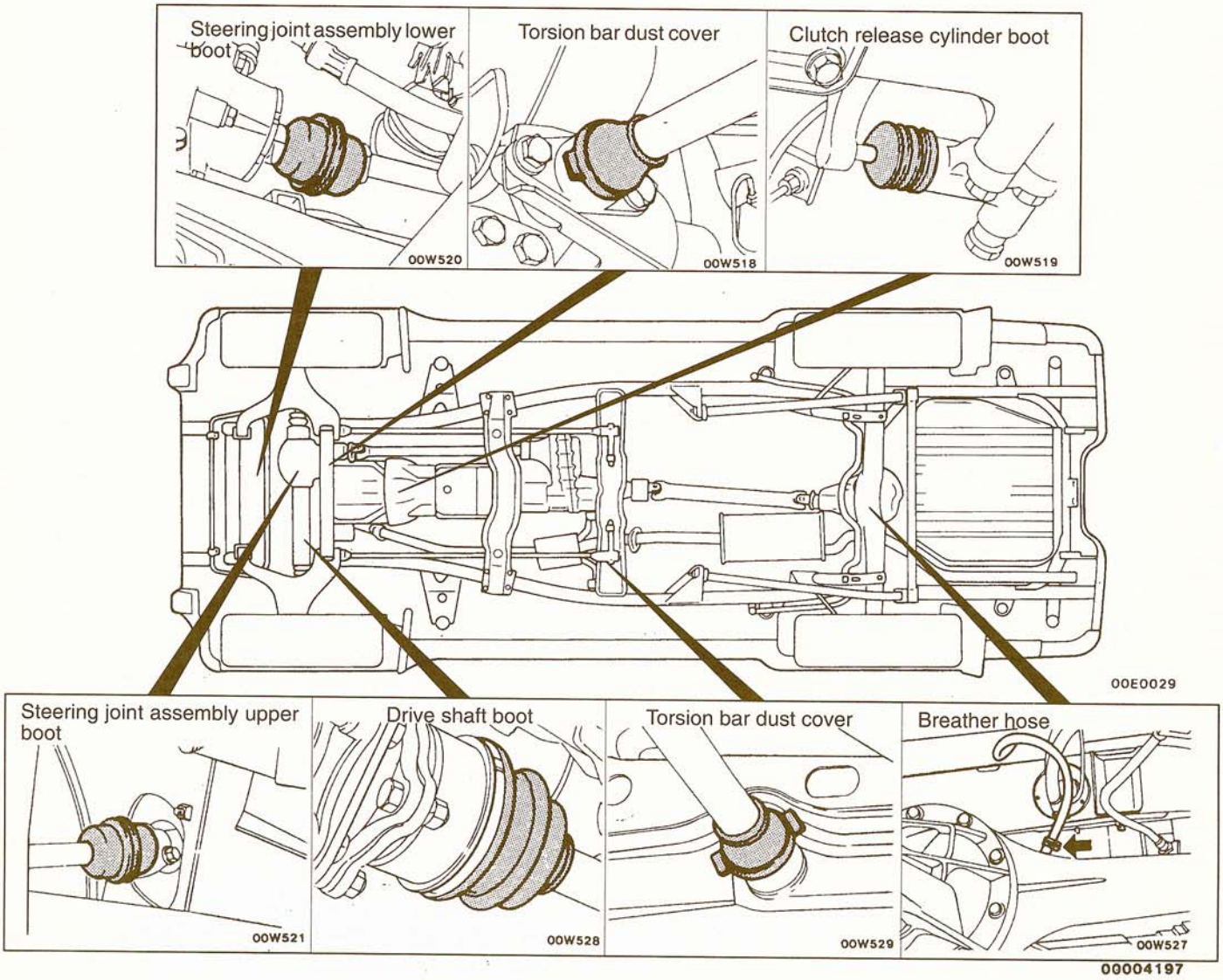

- Apply grease to the lubricating points of the front suspension, steering linkage and propeller shaft.

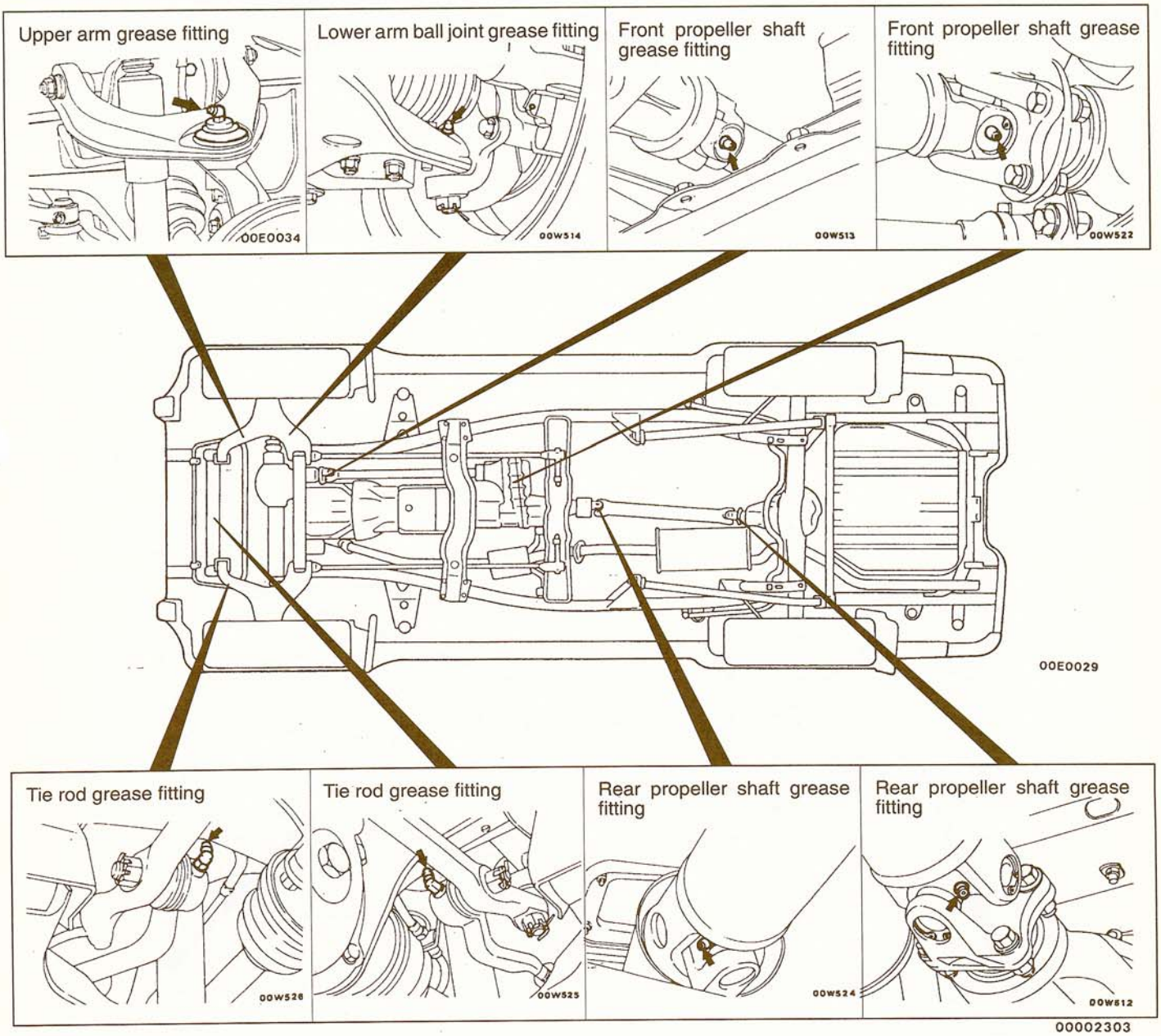

## INSPECTION AND SERVICE AFTER FORDING A STREAM

After fording a stream, check the following points. If ar abnormal condition is evident, clean, replace or lubricate.

- Check for water, mud, sand, etc. in the rear brake drum, clutch housing, starter motor, brake pipe and fuel pipe.
- Check for water in the fluid or oil inside the front differential, rear differential, transmission and transfer.
- Apply grease to the lubricating points of the front suspension, steering linkage and propeller shaft.
- Check all boots and breather hoses for cracks or damage.

**Caution**

**Check to be sure that there are no water and mud entering from each component connection.**

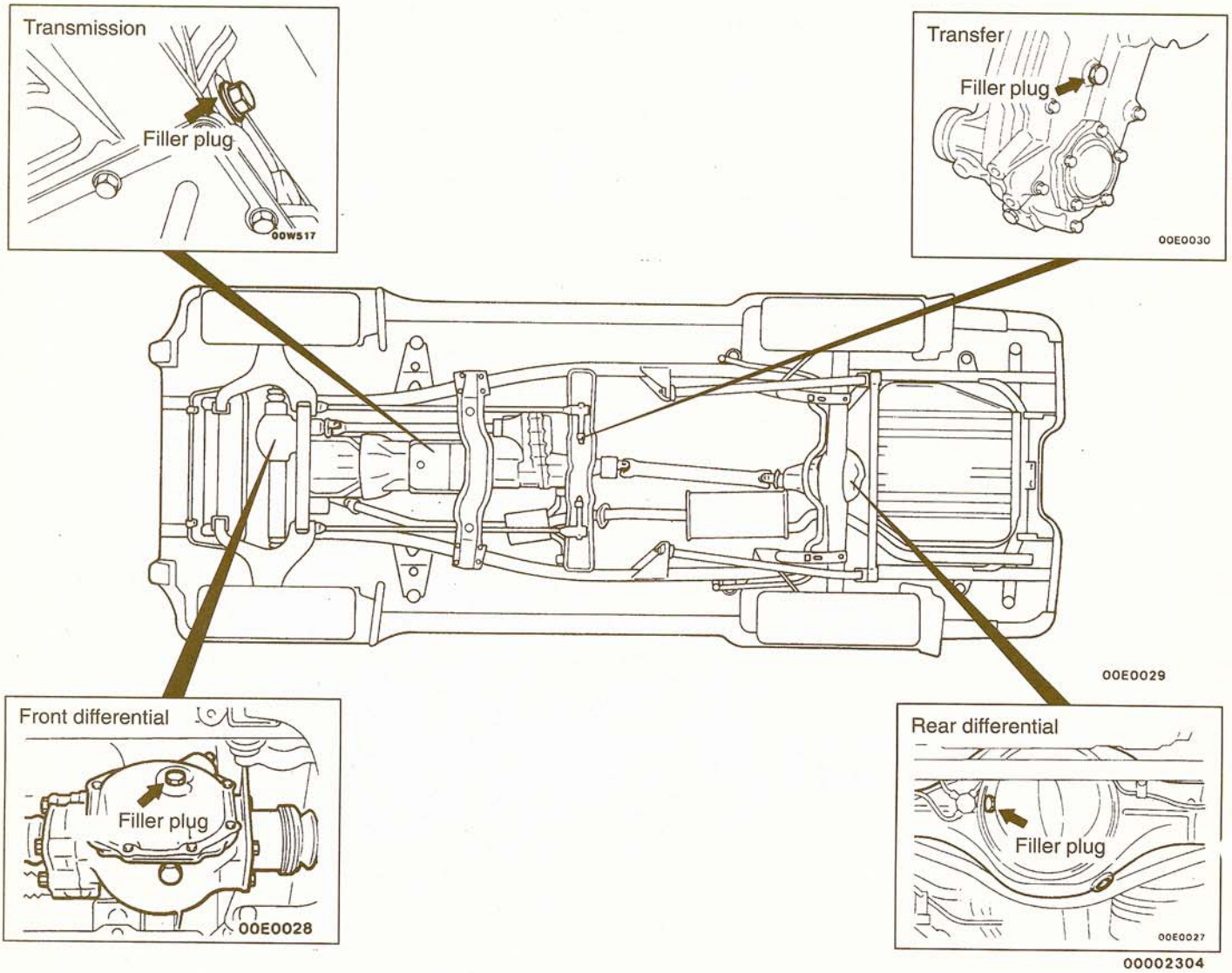

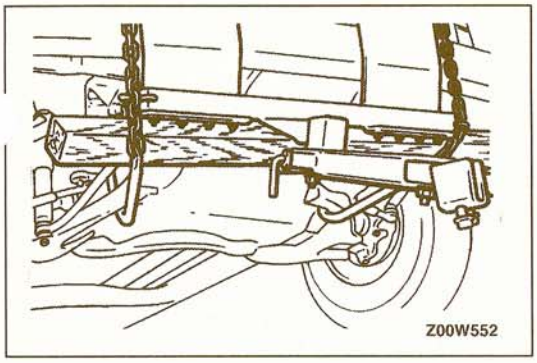
Z00W552

# TOWING AND HOISTING

00100080051

This vehicle can only be towed from the front with conventional sling-type equipment and tow chain with grab hooks.
If the vehicle is towed from the rear, use a tow dolly.
A lumber spacer (4" × 4" × 55" wood beam) should be placed forward of the under guard and under the towing hook/shipping tie down hook.
Then, attach a J-hook to the lower arm.
A safety chain system must be used. This system must be completely independent of the primary lifting and towing attachment. Care must be taken in the installation of safety' chains to insure they do not cause damage to the bumper, painted surfaces or lights.

## LIFTING-GROUND CLEARANCE

The towed vehicle should be raised until the wheels are a minimum of 10 cm (4 in.) from the ground. Make sure that there is adequate ground clearance at the opposite end of the vehicle, especially when towing over rough terrain or when crossing sharp rises such as curbs. If necessary, the ground clearance can be increased by removing the wheels from the lifted end of the disabled vehicle and carrying the lifted end closer to the ground. A 20 cm (8 in.) ground clearance must be maintained between the brake discs and the ground.

## FRONT TOWING PICK-UP

The vehicle may be towed on its rear wheels for extended distances, provided the parking brake is released.
Make sure that the transmission remains in the N position.

## SAFETY PRECAUTION

The following precautions should be taken when towing the vehicle.

1. Remove exhaust tips and any other optional equipment that interface with the towing sling. Padding (heavy shop towel or carpeting) should be placed between the towing sling cross bar and any painted surfaces and bumper surfaces.
2. A safety chain system completely independent of the primary lifting and towing attachment must be used
3. Any loose or protruding parts of damaged vehicle such as hoods, doors, fenders, trim, etc., should be secured prior to moving the vehicle.
4. The operator should refrain from getting underneath a vehicle unless the vehicle is adequately supported by safety stands.
5. Never allow passengers to ride in a towed vehicle.
6. State and local rules and regulations must be followed when towing a vehicle.

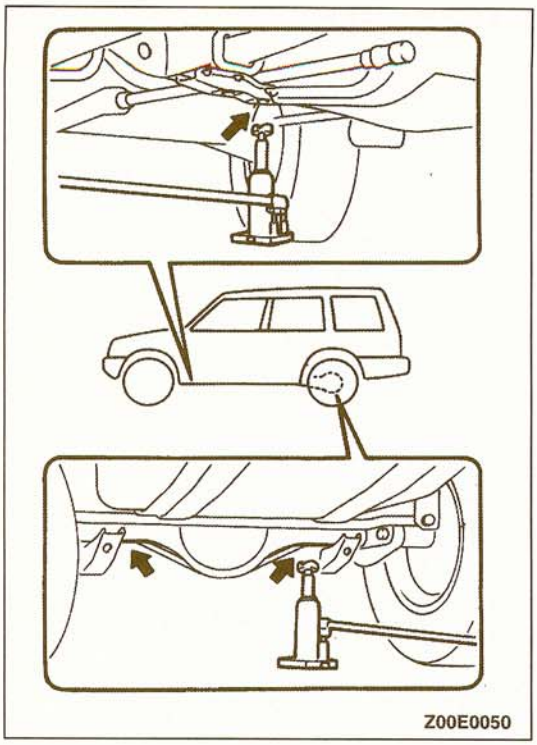
Z00E0050

## HOISTING

### EMERGENCY JACKING

Jack receptacles are located at the No. 2 crossmember and rear axle housing to accept the jack supplied with the vehicle for emergency road service. Always block the opposite wheels and jack only on a level surface.

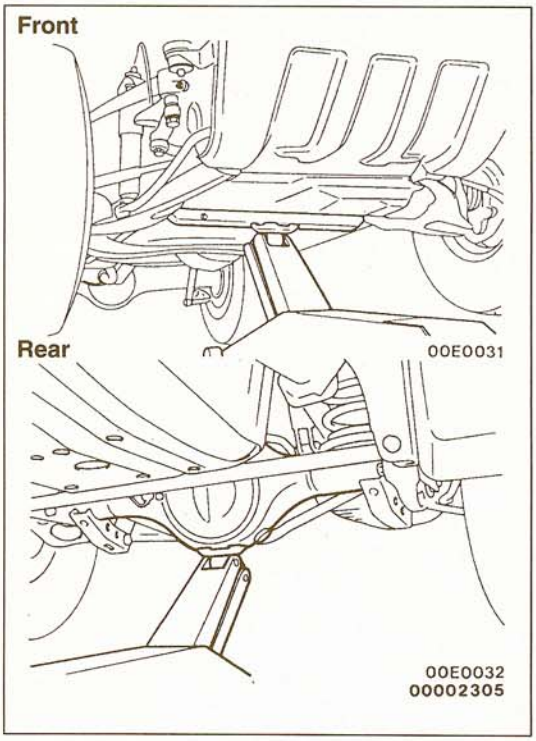


### FLOOR JACK

A regular floor jack may be used under the front crossmember or rear axle housing.

**Caution**

1. **A floor jack must never be used on any part of the underbody.**
2. **Do not attempt to raise one entire side of the vehicle by placing a jack midway between front and rear wheels.**
   **This practice may result in permanent damage to the body.**

## POST TYPE

Special care should be taken when raising the vehicle on a frame contact type hoist. The hoist must be equipped with the proper adapters in order to support the vehicle at the proper locations shown in the illustration.
Conventional hydraulic hoists may be used after determining that the adapter plates will make firm contact with the side frame.

**Caution**
**When service procedures require removal of the rear suspension, the fuel tank or the spare tire, additional weight on the rear end of the vehicle or anchor the vehicle to a hoist to prevent center of gravity changes.**

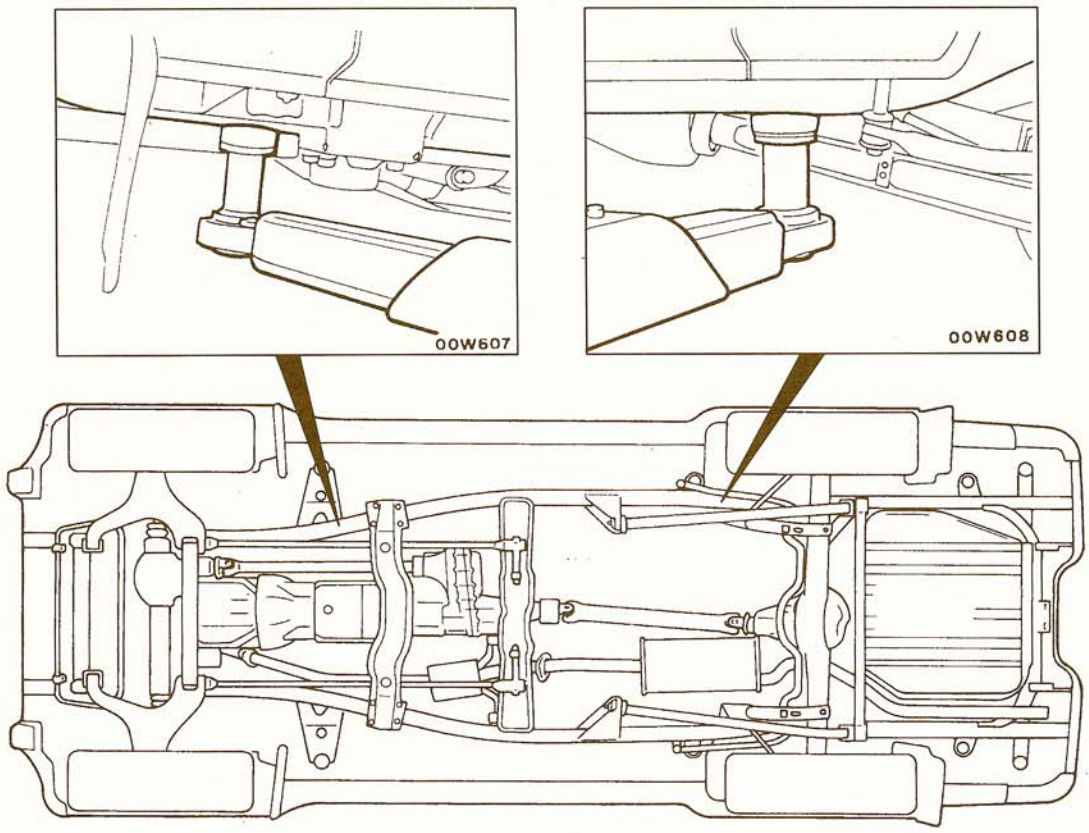


00E0029

00002306

# GENERAL DATA AND SPECIFICATIONS

00100090061

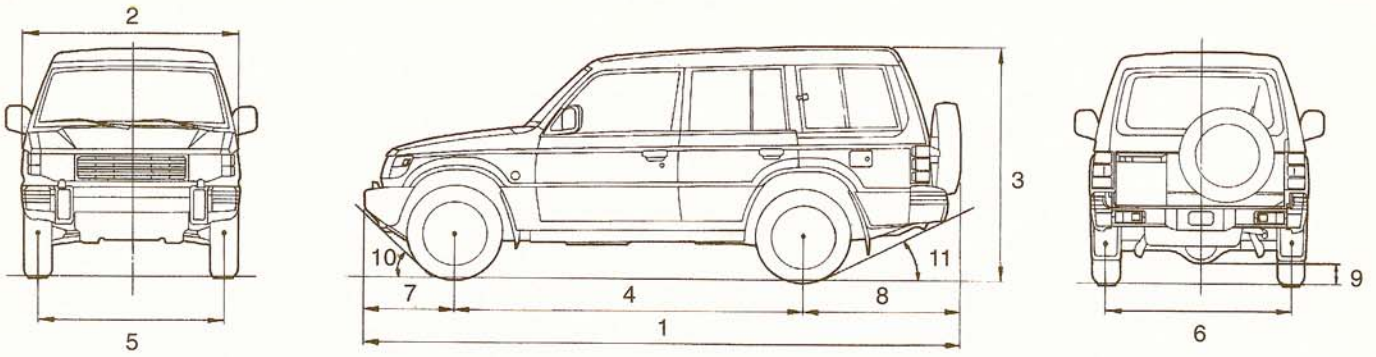


Z00E0040

| Items | | | V43WNDEL2M<br>V43WRDEL2M<br>V43WRHEL2M | V43WGRXEL2M | V43WNHVL2M<br>V43WNHVL7M<br>V43WRHVL2M<br>V43WRHVL7M | V45WGRXML2M<br>V45WGRXML7M |
|---|---|---|---|---|---|---|
| Vehicle dimensions mm (in.) | Overall length | 1 | 4,705 (185.2) | 4,740 (186.6) | 4,705 (185.2) | 4,740 (186.6) |
| | Overall width | 2 | 1,695 (66.7) | 1,785 (70.3) | 1,695 (66.7) | 1,785 (70.3) |
| | Overall height | 3 | 1,865 (73.4) | 1,880 (74.0) | 1,895 (74.6) | 1,910 (75.2) |
| | Wheelbase | 4 | 2,725 (107.3) | 2,725 (107.3) | 2,725 (107.3) | 2,725 (107.3) |
| | Tread – front | 5 | 1,420 (55.9) | 1,465 (57.7) | 1,420 (55.9) | 1,465 (57.7) |
| | Tread – rear | 6 | 1,435 (56.5) | 1,480 (58.3) | 1,435(56.5) | 1,480 (58.3) |
| | Overhang – front | 7 | 720 (28.3) | 720 (28.3) | 720 (28.3) | 720 (28.3) |
| | Overhang – rear | 8 | 1,260 (49.6) | 1,295 (51.0) | 1,260 (49.6) | 1,295 (51.0) |
| | Minimum running ground clearance | 9 | 190 (7.5) | 210 (8.3) | 190 (7.5) | 180 (7.1) |
| | Angle of approach degrees | 10 | 40.0 | 42.0 | 40.0 | 42.0 |
| | Angle of departure degrees | 11 | 19.0 | 20.0 | 19.0 | 20.0 |
| Vehicle weights kg (lbs.) | Curb weight | | M/T: 1,880 (4,145)<br>A/T: 1,875 (4,135)*1<br>1,895 (4,175)*2 | 1,930 (4,255) | M/T: 1,945 (4,290)<br>A/T: 1,950 (4,300) | 2,025 (4,465) |
| | Gross vehicle weight rating | | 2,600 (5,732) | 2,600 (5,732) | 2,600 (5,732) | 2,650 (5,840) |
| | Gross axle weight rating – front | | 1,200 (2,645) | 1,200 (2,645) | 1,200 (2,645) | 1,200 (2,645) |
| | Gross axle weight rating – Rear | | 1,650 (3,637) | 1,650 (3,637) | 1,650 (3,637) | 1,780 (3,925) |
| Seating capacity | | | 5 (or 7*) | | 5 (or 7*) | 5 (or 7*) |

NOTE
*: Vehicles with optional third seat
*1: V43WRDEL2M
*2: V43WRHEL2M

**TSB Revision**

| Items | | V43WNDEL2M<br>V43WRDEL2M<br>V43WRHEL2M | V43WGRXEL2M | V43WNHVL2M<br>V43WNHVL7M<br>V43WRHVL2M<br>V43WRHVL7M | V45WGRXML2M<br>V45WGRXML7M |
|---|---|---|---|---|---|
| Engine | Model No. | 6G72 | | 6G72 | 6G74 |
| | Piston displacemen $cm^3$ (cu.in.) | 2,972 (181.3) | | 2,972 (181.3) | 3,497 (213.4) |
| Trans-mission & trans-fer | Model No. & Type | M/T: V5MT1<br>5-speed manual<br>A/T: V4AW2<br>4-speed automatic | | M/T: V5MT1<br>5-speed manual<br>A/T: V4AW3<br>4-speed automatic | |
| Fuel system | Fuel supply system | MFI | | MFI | |

# TIGHTENING TORQUE

00100110040

Each torque value in the table is a standard value for tightening under the following conditions.
(1) Bolts, nuts and washers are all made of steel and plated with zinc.
(2) The threads and bearing surface of bolts and nuts are all in dry condition.

The values in the table are not applicable:
(1) If toothed washers are inserted.
(2) If plastic parts are fastened.
(3) If bolts are tightened to plastic or die-cast inserted nuts.
(4) If self-tapping screws or self-locking nuts are used

### Standard bolt and nut tightening torque

| Thread size | | Torque Nm (ft.lbs.) | | |
|---|---|---|---|---|
| Nominal bolt diameter (mm) | Pitch (mm) | Head mark "4" | Head mark "7" | Head mark "8" |
| M5 | 0.8 | 2.5 (1.8) | 4.9 (3.6) | 5.9 (4.3) |
| M6 | 1.0 | 4.9 (3.6) | 8.8 (6.5) | 9.8 (7.2) |
| M8 | 1.25 | 12 (8.7) | 22 (16) | 25 (18) |
| M10 | 1.25 | 24 (17) | 44 (33) | 52 (38) |
| M12 | 1.25 | 41 (30) | 81 (60) | 96 (71) |
| M14 | 1.5 | 72 (53) | 137 (101) | 157 (116) |
| M16 | 1.5 | 111 (82) | 206 (152) | 235 (174) |
| M18 | 1.5 | 167 (123) | 304 (224) | 343 (253) |
| M20 | 1.5 | 226 (166) | 412 (304) | 481 (354) |
| M22 | 1.5 | 304 (224) | 559 (412) | 647 (477) |
| M24 | 1.5 | 392 (289) | 735 (542) | 853 (629) |

### Flange bolt and nut tightening torque

| Thread size | | Torque Nm (ft.lbs.) | | |
|---|---|---|---|---|
| Nominal bolt diameter (mm) | Pitch (mm) | Head mark "4" | Head mark "7" | Head mark "8" |
| M6 | 1.0 | 4.9 (3.6) | 9.8 (7.2) | 12 (8.7) |
| M8 | 1.25 | 13 (9.4) | 24 (17) | 28 (20) |
| M10 | 1.25 | 26 (19) | 49 (36) | 57 (42) |
| M10 | 1.5 | 24 (17) | 44 (33) | 54 (40) |
| M12 | 1.25 | 46 (34) | 93 (69) | 103 (76) |
| M12 | 1.75 | 42 (31) | 81 (60) | 96 (71) |

# LUBRICATION AND MAINTENANCE

00100120043

Maintenance and lubrication service recommendations have been compiled to provide maximum protection for the vehicle owner's investment against all reasonable types of driving conditions. Since these conditions vary with the individual vehicle owner's driving habits, the area in which the vehicle is operated and the type of driving to which the vehicle is subjected, it is necessary to prescribe lubrication and maintenance service on a time frequency as well as mileage interval basis. Oils, lubricants and greases are classified and graded according to standards recommended by the Society of Automotive Engineers (SAE), the American Petroleum Institute (API) and the National Lubricating Grease Institute (NLGI).

## MAINTENANCE SCHEDULES

Information for service maintenance is provided in the "SCHEDULED MAINTENANCE TABLE".
Three schedules are provided; one for "Required Maintenance". one for "General Maintenance" and one for "Severe Usage Service."
The item numbers in "SCHEDULED MAINTENANCE TABLE" correspond to the section numbers in "MAINTENANCE SERVICE."

## SEVERE SERVICE

Vehicles operating under severe service conditions will require more frequent service.
Component service information is included in appropriate units for vehicles operating under one or more of the following conditions:

1. Trailer towing or police, taxi or commercial type operation.
2. Operation of Vehicle
   (1) Short-trip operation at freezing temperature (engine not thoroughly warmed up)
   (2) More than 50% operation in heavy city traffic during hot weather above 32°C (90°F)
   (3) Extensive idling
   (4) Driving in sandy areas
   (5) Driving in salty areas
   (6) Driving in dusty conditions
   (7) Driving on off-road

## ENGINE OIL

Either of the following engine oils should be used:
(1) Engine oil displaying EOLCS certification mark.
(2) Engine oil conforming to the API classification SH ECII, SH/CD ECII, SG ECII or SG/CD ECII.
For further details, refer to "LUBRICANTS SELECTION" section.

**Caution**
**Test results submitted to EPA have shown that laboratory animals develop skin cancer after prolonged contact with used engine oil. Accordingly, the potential exists for humans to develop a number of skin disorders, including cancer, from such exposure to used engine oil. Care should be taken, therefore, when changing engine oil, to minimize the amount and length of exposure time to used engine oil on your skin. Protective clothing and gloves, that cannot be penetrated by oil, should be worn. The skin should be thoroughly washed with soap and water, or use waterless hand cleaner, to remove any used engine oil. Do not use gasoline, thinners, or solvents.**

## LUBRICANTS AND GREASES

Semi-solid lubricants bear the NLGI designation and are further classified as grades 0, 1, 2, 3, etc. Whenever "Chassis Lubricant" is specified, Multi-Purpose Grease, NLGI grade No. 2, should be used.

## FUEL USAGE STATEMENT

Your vehicle must be unleaded gasoline only.
This vehicle has a fuel filler tube which is especially designed to accept only the smaller-diameter unleaded gasoline dispensing nozzle.

**CAUTION**
**Using leaded gasoline in your car will damage the catalytic converters and oxygen sensors, and affect the warranty coverage validity.**

**Vehicles with SOHC engine; <3.0L Engine>**

Your car is designed to operate on unleaded gasoline having a minimum octane rating of 87 [(MON + RON)/2], or 91 RON.

**Vehicles with DOHC engine; <3.5L Engine>**

Your car is designed to operate on premium unleaded gasoline having a minimum octane rating of 91 [(MON + RON)/2], or 95 RON.
If premium unleaded gasoline is not available, unleaded gasoline having a octane rating of 87 [(MON + RON)/2], or 91 RON may be used. In this case, the performance and fuel consumption will suffer a little degradation.
MON: Motor Octane Number
RON: Research Octane Number

### GASOLINES CONTAINING ALCOHOL

Some gasolines sold at service stations contain alcohol although they may not be so identified. Using fuels containing alcohol is not recommended unless the nature of the blend can be determined as being satisfactory.
Gasohol: A mixture of 10% ethanol (grain alcohol) and 90% unleaded gasoline may be used in your vehicle. If drivability problems are experienced as a result of using gasohol, it is recommended that the vehicle be operated on gasoline.
Methanol: **Do not use gasolines containing methanol (wood alcohol)**. Using this type of alcohol can result in vehicle performance deterioration and damage critical parts in the fuel system components. Fuel system damage and performance problems resulting from the use of gasolines containing methanol may not be covered by the new vehicle warranty.

### GASOLINES CONTAINING MTBE (METHY TERTIARY BUTYL ETHER)

Unleaded gasoline containing 15% or less MTBE may be used in your vehicle. (Fuel containing MTBE over 15% vol. may cause reduced engine performance and produce vapor lock or hard starting.

## MATERIALS ADDED TO FUEL

Indiscriminate use of fuel system cleaning agents should be avoided. Many of these materials intended for gum and varnish removal may contain highly active solvents or similar ingredients that can be harmful to gasket and diaphragm materials used in fuel system component parts.

# RECOMMENDED LUBRICANTS AND LUBRICANT CAPACITIES TABLE

00100130046

## RECOMMENDED LUBRICANTS

| Parts | | Specifications | Remarks |
|---|---|---|---|
| Engine oil | | Engine oil displaying EOLCS certification mark or conforming the API classification SH ECII, SH/CD ECII, SG ECII or SG/CD EC II | For further details, refer to "LUBRICANTS SELECTION" section. |
| Manual transmission | | API classification GL-4 | SAE grade number: SAE 75W-90 or 75W/85W |
| Automatic transmission | | DIAMOND ATF SP, ATF DEXRON II or equivalent | – |
| Transfer | | API classification GL-4 | SAE grade number: SAE 75W-90 or 75W/85W |
| Front axle | | API classification GL-5 or higher | For further details, refer to "LUBRICANTS SELECTION" section. |
| Rear axle | Conventional differential | API classification GL-5 or higher | For further details, refer to "LUBRICANTS SELECTION" section. |
| | Limited-slip differential | – | Mitsubishi Genuine Gear Oil Part No. 8149630EX or equivalent |
| Power steering | | "DEXRON II" Automatic Transmission Fluid | – |
| Brakes and clutch | | Conforming to DOT 3 or DOT 4 | |
| Engine coolant | | – | HIGH QUALITY ETHYLENE GLYCOL ANTIFREEZE COOLANT |
| Door hinges, back door hinges | | Engine oil | – |

## LUBRICANT CAPACITIES TABLE

| Description | | | Specifications |
|---|---|---|---|
| Engine oil $dm^3$ (qts.) | Crankcase (except for oil filter and oil cooler) | | 4.3 (4-1/2) |
| | Oil filter | | 0.3 (1/2) |
| | Oil cooler | | 0.3 (1/2) |
| Cooling system (including front heater and coolant reserve tank) $dm^3$ (qts.) | | | 9.5 (10.0) |
| Manual transmission $dm^3$ (qts.) | | | 2.5 (2.6) |
| Automatic transmission $dm^3$ (qts.) | | | 7.2 (7.6) |
| Transfer $dm^3$ (qts.) | V5MT1, V4AW2 | | 2.3 (2.4) |
| | V4AW3 | | 2.5 (2.6) |
| Front axle $dm^3$ (qts.) | | | 1.2 (1.3) |
| Rear axle $dm^3$ (qts.) | | 3.0L Engine | 2.6 (2.7) |
| | | 3.5L Engine | 3.2 (3.3) |
| Power steering $dm^3$ (qts.) | | | 1.06 (1.12) |
| Fuel tank $dm^3$ (gals.) | | | 92 (24.3) |

**EOLCS certification mark**




M03A015

## LUBRICANTS SELECTION

### ENGINE OIL

**Caution**
**Never use nondetergent or straight mineral oil.**

**Oil Identification Symbol**

Use only engine oils displaying the EOLCS certification mark on the container.




M03A014

If these oils are not available, an API classification SH ECII, SH/CD ECII, SG ECII or SG/CD ECII can be used.

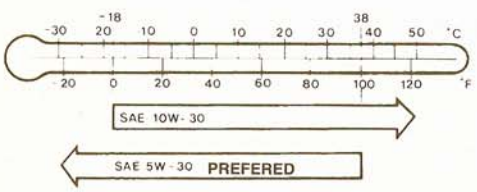


M03B001

**Oil Viscosity**

The SAE grade number indicates the viscosity of the oil. A proper SAE grade number should be selected according to ambient temperature.

TSB Revision

### FRONT AXLE/REAR AXLE (CONVENTIONAL DIFFERENTIAL)

| Lubricant | API classification GL-5 or higher |
|---|---|
| Expected temperature range | Viscosity range |
| Above –23°C (–10°F) | SAE 90,<br>SAE 85W-90 or<br>SAE 80W-90 |
| –20°C to –34°C<br>(–10°F to –30°F) | SAE 80W or<br>SAE 80W-90 |
| Below –34°C (–30°F) | SAE 75W |

### REAR AXLE (LIMITED SLIP DIFFERENTIAL)

Refer to GROUP 27 – Specifications.

## SELECTION OF COOLANT

### COOLANT

**Relationship between Coolant Concentration and Specific Gravity**

| Coolant temperature °C (°F) and specific gravity | | | | | Freezing temperature | Safe operating temperature | Coolant concentration (Specific volume) |
|---|---|---|---|---|---|---|---|
| 10 (50) | 20 (68) | 30 (86) | 40 (104) | 50 (122) | °C (°F) | °C (°F) | % |
| 1.054 | 1.050 | 1.046 | 1.042 | 1.036 | –16 (3.2) | –11 (12.2) | 30 |
| 1.063 | 1.058 | 1.054 | 1.049 | 1.044 | –20 (–4) | –15 (5) | 35 |
| 1.071 | 1.067 | 1.062 | 1.057 | 1.052 | –25 (–13) | –20 (–4) | 40 |
| 1.079 | 1.074 | 1.069 | 1.064 | 1.058 | –30 (–22) | –25 (–13) | 45 |
| 1.087 | 1.082 | 1.076 | 1.070 | 1.064 | –36 (–32.8) | –31 (–23.8) | 50 |
| 1.095 | 1.090 | 1.084 | 1.077 | 1.070 | –42 (–44) | –37 (–35) | 55 |
| 1.103 | 1.098 | 1.092 | 1.084 | 1.076 | –50 (–58) | –45 (–49) | 60 |

Example
The safe operating temperature is –15°C (5°F) when the measured specific gravity is 1.058 at the coolant temperature of 20°C (68°F)

**Caution**

1. **If the concentration of the coolant is below 30%, the anti-corrosion property will be adversely affected. In addition, if the concentration is above 60%, both the anti-freeze and engine cooling properties will decrease, affecting the engine adversely. For these reasons, be sure to maintain the concentration level within the specified range.**
2. **Do not use a mixture of different brands of anti-freeze.**

# SCHEDULED MAINTENANCE TABLE

00100140049

## SCHEDULED MAINTENANCE SERVICE FOR EMISSION CONTROL AND PROPEP VEHICLE PERFORMANCE

Inspection and service should be performed any time a malfunction is observed or suspected. Retain receipts for all vehicle emission services to protect your emission warranty.

| No. | Emission Control System Maintenance | Service Intervals | | | | | | | | | | |
|---|---|---|---|---|---|---|---|---|---|---|---|---|
| | | | Kilometers in Thousands | 24 | 48 | 72 | 96 | 120 | 144 | 160 | 168 | 192 |
| | | | Mileage in Thousands | 15 | 30 | 45 | 60 | 75 | 90 | 100 | 105 | 120 |
| 1 | Fuel System (Tank, Pipe Line and Connection, and Fuel Tank Filler Tube Cap) | Check for Leaks Every 5 Years or | | | | | X | | | | | X |
| 2 | Fuel Hoses | Check Condition Every 2 Years or | | | X | | X | | X | | | X |
| 3 | Air Cleaner Element | Replace at | | | X | | X | | X | | | X |
| 4 | Evaporative Emission Control System* (Except for Canister) | Check for Leaks and Clogging Every 5 Years or | | | | | X | | | | | X |
| 5 | Spark Plugs | Replace | Except Platinum Plugs at | | X | | X | | X | | | X |
| | | | Platinum Plugs Only at | | | | X | | | | | X |
| 6 | Ignition Cables | Replace Every 5 Years or | | | | | X | | | | | X |
| 7 | Distributor Cap and Rotor (3.0L-12 VALVE Engine) | Check Every 5 Years or | | | | | X | | | | | X |

## GENERAL MAINTENANCE SERVICE FOR PROPER VEHICLE PERFORMANCE

| No. | General Maintenance | | Service Intervals | Kilometers in Thousands | 24 | 48 | 72 | 96 | 120 | 144 | 160 | 168 | 192 |
|---|---|---|---|---|---|---|---|---|---|---|---|---|---|
| | | | | Mileage in Thousands | 15 | 30 | 45 | 60 | 75 | 90 | 100 | 105 | 120 |
| 8 | Timing Belt | | Replace at | | | | | X*3 | | | X*4 | | X*3 |
| 9 | Drive Belt (for Generator, Water Pump, Power Steering Pump) | | Check Condition at | | | X | | X | | X | | | X |
| 10 | Engine Oil | | Change Oil Every 12 Months or | | Every 12,000 km (7,500 miles) | | | | | | | | |
| 11 | Engine Oil Filter | | Replace Every 12 Months or*5 | | X | X | X | X | X | X | | X | X |
| 12 | Manual Transmission oil | | Check Oil Level at | | | X | | X | | X | | | X |
| 13 | Automatic Transmission Fluid | | Check Fluid Level Every 12 Months or | | X | X | X | X | X | X | | X | X |
| 14 | Automatic Transmission Fluid | | Change Fluid at | | | X | | X | | X | | | X |
| 15 | Transfer oil | | Check oil level | | | X | | X | | X | | | X |
| 16 | Engine Coolant | | Change Coolant Every 2 Years or | | | X | | X | | X | | | X |
| 17 | Disc Brake Pads | | Inspect for Wear Every 12 Months or | | X | X | X | X | X | X | | X | X |
| 18 | Brake Hoses | | Check for Deterioration or Leaks Every 12 Months or | | X | X | X | X | X | X | | X | X |
| 19 | Ball Joint and Steering Linkage Seals | | Inspect for Grease Leaks and Damage Every 2 Years or | | | X | | X | | X | | | X |
| 20 | Drive Shaft Boots | | Inspect for Grease Leaks and Damage Every 12 Months or | | X | X | X | X | X | X | | X | X |
| 21 | Ball Joints With Grease Fitting | | Lubricate with Grease Every 2 Years or | | | X | | X | | X | | X | X |
| 22 | Front Axle and Rear Axle | With LSD*1 | Change Oil at | | | X | | X | | X | | X | X |
| | | Without LSD*1 | Inspect Oil Level at | | | X | | X | | X | | X | X |
| 23 | Propeller Shaft Joints | | Lubricate with Grease Every 2 Years or | | | X | | X | | X | | X | X |
| 24 | Exhaust System Connection Portion of Muffler, Piping and Converter Heat Shields | | Check and Service as Required Every 2 Years or | | | X | | X | | X | | X | X |
| 25 | SRS*2 air bag | | Inspect the SRS System at | | 10 years | | | | | | | | |

NOTE
*1: LSD: Limited-slip differential
*2: SRS: Supplemental Restraint System
*3: For California, this maintenance is recommended but not required
*4: Not required if belt was previously changed
*5: If the mileage is less than 12,000 km (7,500 miles) each year, the oil filter should be replaced at every oil change

**TSB Revision**

## SCHEDULED MAINTENANCE UNDER SEVERE USAGE CONDITIONS

Maintenance should be carried out according to the following table:

| No. | Maintenance Item | Service to be Performed | Mileage Intervals Kilometers in Thousands (Miles in Thousands) | 24 (15) | 48 (30) | 72 (45) | 96 (60) | Severe Usage Conditions |
|---|---|---|---|---|---|---|---|---|
| 3 | Air Cleaner Element | Replace at | | X | X | X | X | A and E |
| 5 | Spark Plugs | Replace at | | X | X | X | X | B and D |
| 10 | Engine Oil | Change Every 3 Months or | | Every 4,800 km (3,000 miles) | | | | A, B, C, D and G |
| 11 | Engine Oil Filter | Replace Every 6 Months or | | Every 9,600 km (6,000 miles) | | | | A, B, C, D and G |
| 12 | Manual Transmission Oil | Change Oil at | | | X | | X | B, G and H |
| 15 | Transfer oil | Change Oil at | | | X | | X | B, G and H |
| 17 | Disc Brake Pads (Front) | Inspect for Wear at | | Every 9,600 km (6,000 miles) or 6 months | | | | A and F |

Severe usage conditions

A – Driving in dusty conditions
B – Trailer towing, or police, taxi or commercial type operation
C – Extensive idling
D – Short-trip operation at freezing temperatures (engine not thoroughly warmed up)
E – Driving in sandy areas
F – Driving in salty areas
G – More than 50% operation in heavy city traffic during hot weather above 32°C (90°F)
H – Driving on off-road

# MAINTENANCE SERVICE 00100160038

## 1. FUEL SYSTEM (Check for leaks)

### TANK, PIPE LINE AND CONNECTIONS, AND FUEL TANK FILLER TUBE CAP

1. Check for damage or leakage in the fuel lines and connections.
2. Inspect the surface of fuel hoses for heat and mechanical damage. Hard and brittle rubber, cracking, checking, tears, cuts, abrasions and excessive swelling indicate deterioration of the rubber.
3. If the fabric casing of the rubber hose is exposed by cracks and abrasions in the fuel system, the hoses should be changed.

## 2. FUEL HOSES (Check) 00100170031

Make sure that the hoses do not come in contact with any heat source or moving component which might cause heat damage or mechanical wear.

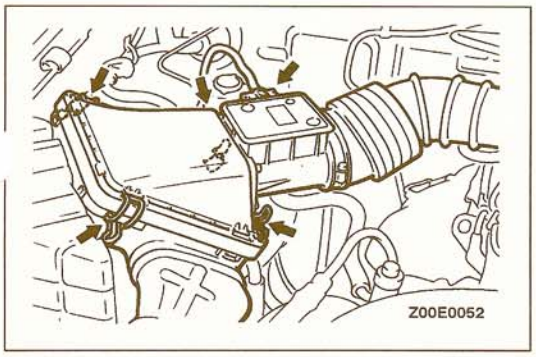


## 3. AIR CLEANER ELEMENT (Replace) 00100180041

The air cleaner element will become dirty and loaded with dust during use, and the filtering effect will be substantially reduced. Replace it with a new one.

### REPLACEMENT OF AIR CLEANER ELEMENT

1. Loosen the clamp coupling the air intake hose and the air cleaner cover, and separate the air intake hose
2. Disconnect the volume air flow sensor connector.
3. Disconnect the air cleaner cover clips.
4. Remove the air cleaner cover and replace the air cleaner element with a new one.
5. Clamp the clips and coupling, and then connect the volume air flow sensor connector.

## 4. EVAPORATIVE EMISSION CONTROL SYSTEM (Check for leaks and clogging) – Except canister 00100190044

1. If the fuel-vapor vent line is clogged or damaged, the fuel vapor mixture will escape into the atmosphere causing excessive emissions. Disconnect the line at both ends, and blow it clean with compressed air. Remove the fuel tank filler tube cap from the filler tube and check to see if there is evidence that the packing makes improper contact to the filler pipe.
2. The fuel tank pressure relief valve installed on the vapor line should be checked for correct operation.

**<Except 3.0L-24 VALVE Engine for California>**

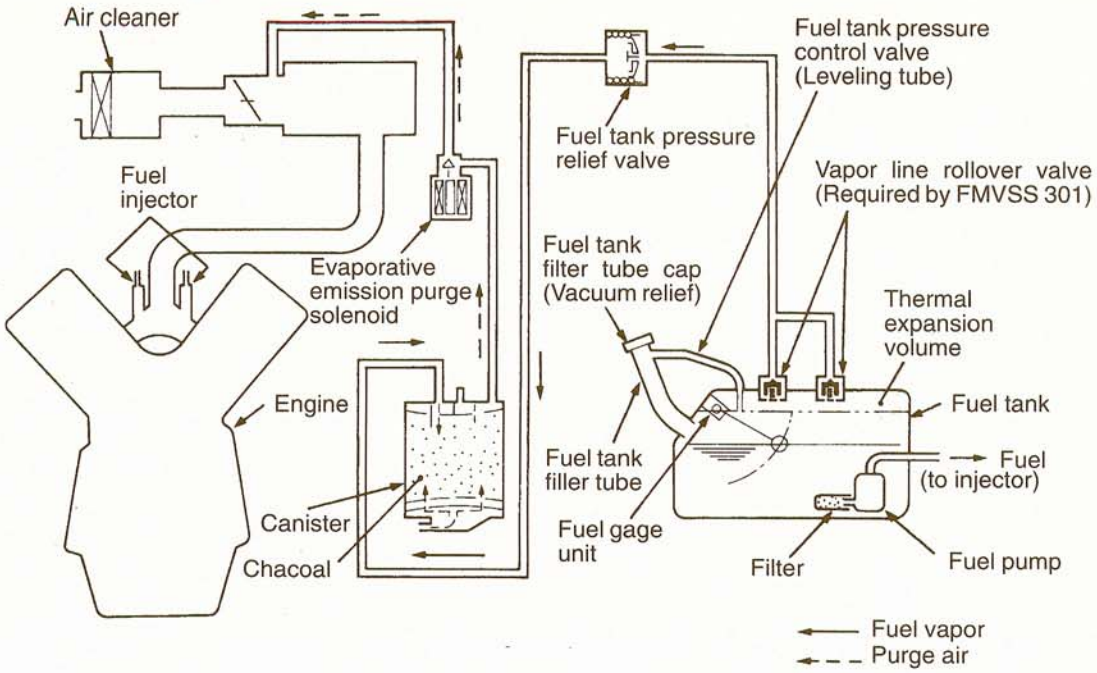


**<3.0L-24 VALVE Engine for California>**

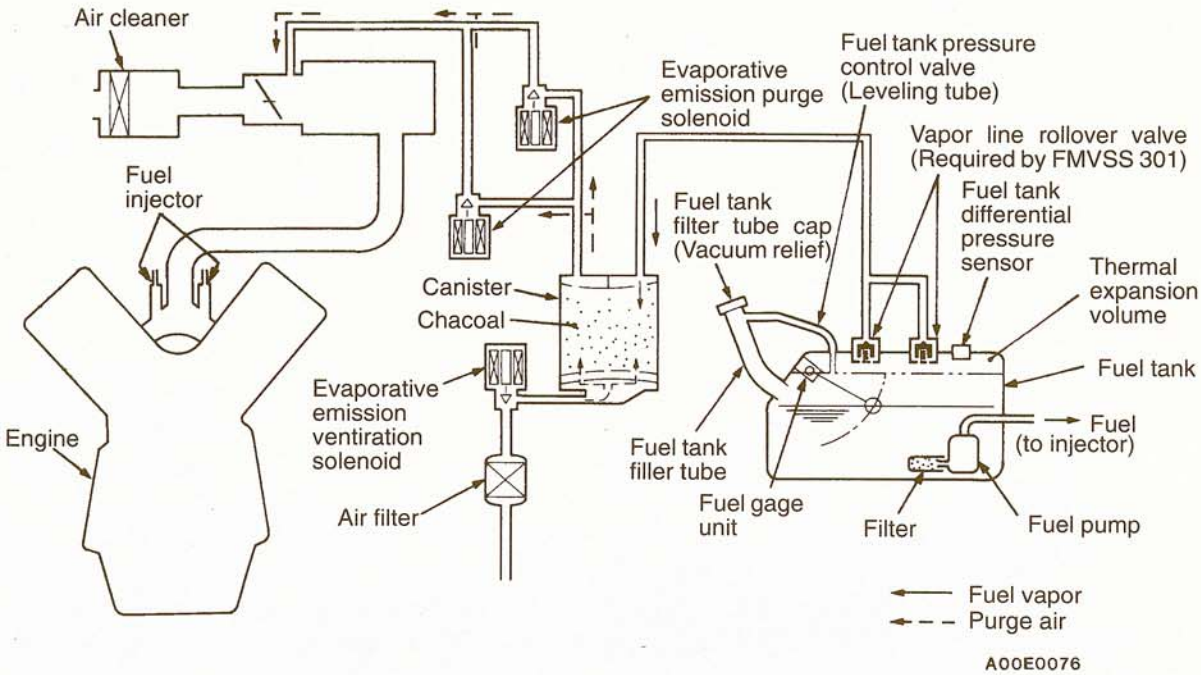

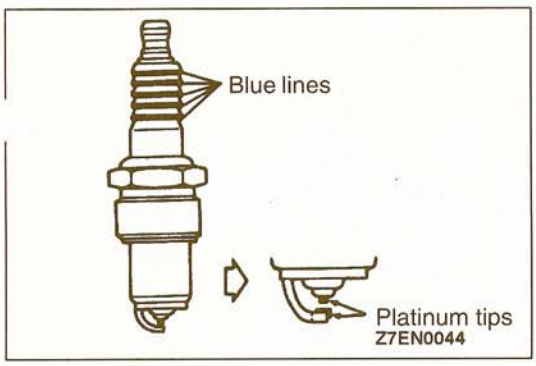


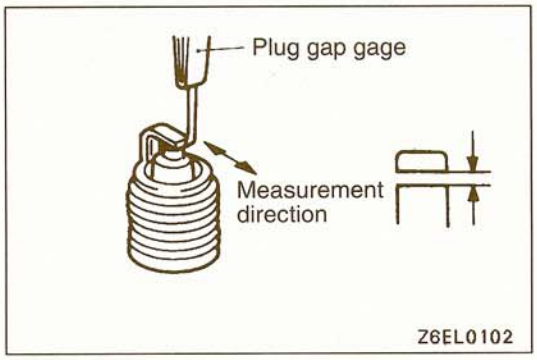


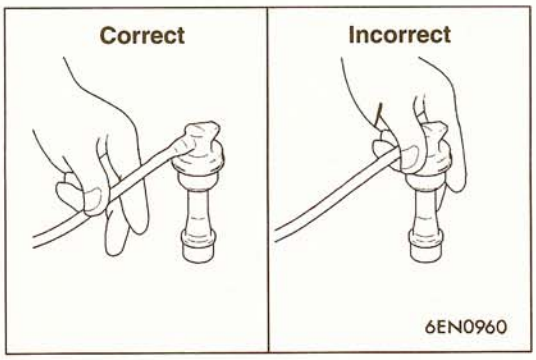


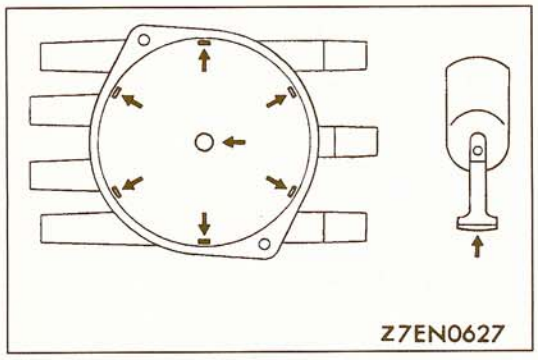


## 5. SPARK PLUGS (Replace)

00100200051

The spark plugs must fire properly to assure proper engine performance and emission control.
Therefore, they should be replaced periodically with new ones.

**Spark plug**

| Maker | 3.0L-12 VALVE engine | 3.0L-24 VALVE engine | 3.5L engine |
|---|---|---|---|
| NGK | BPR5ES-11 | PFR6J-11 | PFR5J-11 |
| NIPPON DENSO | W16EPR-11 | PK20PR-P11 | PK16PR-P11 |
| CHAMPION | RN11YC4 | – | – |

**Spark plug gap: 1.0–1.1 mm (.039–.043 in.)**

NOTE
Use care not to damage the platinum tips of the platinum plug.
Don't adjust the gap either.

**Specified torque: 25 Nm (15 ft.lbs.)**

## 6. IGNITION CABLES (Replace)

00100210047

The ignition cables should be replaced periodically with new ones.
After replacing, make sure that the ignition cables and terminals are properly connected and fully seated.

NOTE
When disconnecting an ignition cable, be sure to hold the cable cap. If the cable is disconnected by pulling on the cable alone, an open circuit might result.

## 7. DISTRIBUTOR CAP AND ROTOR (Check)

00100220040

Check the distributor cap and rotor to maintain driveability and good exhaust gas.

### DISTRIBUTOR CAP AND ROTOR INSPECTION

Inspect by the following procedure, and repair or replace as necessary.

- Check the cap for cracks.
- Check the cap and rotor electrodes for damage.
- Wipe clean the cap and rotor.

## 8. TIMING BELT (Replace)

00100230050

Replace the belt with a new one periodically to assure proper engine performance.
For removal and installation procedures, refer to GROUP 11 – Timing belt.
For inspection procedures, refer the Engine Overhaul Manual for the appropriate engine.

<3.0L-12 VALVE engine>

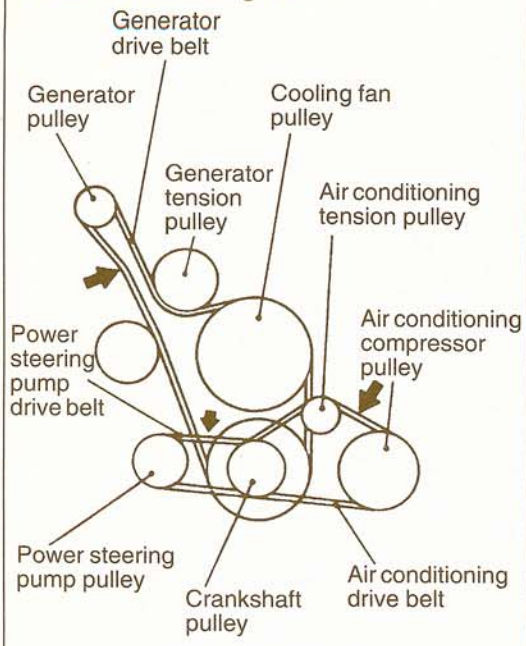


01W713

<3.0L-24 VALVE engine, 3.5L engine>

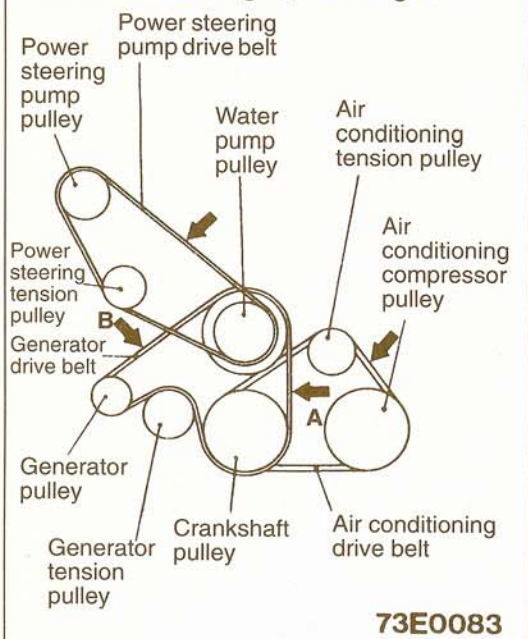


73E0083
00002308

## 9. DRIVE BELTS (Check condition) 00100250063

Check the tension of the drive belts. Inspect the belts for evidence of cuts and cracks, and replace it if defective.
The deflection of the belts must be a shown in the illustration when depressed at a point midway between each of the pulleys with a force of 98 N (22 lbs.)

### <3.0L-12 VALVE engine>

**Standard value:**

| Item | Check value mm (in.) |
|---|---|
| For generator | 8.0–10.0 (.32–.40) |
| For power steering | 9.0–14.5 (.35–.57) |
| For air conditioning | 6.5–7.5 (.26–.30) |

### <3.0L-24 VALVE engine, 3.5L engine>

**Standard value:**

| Item | | Check value mm (in.) | |
|---|---|---|---|
| | | 3.0L-24 VALVE engine | 3.5L engine |
| For generator | A | 5.0–7.0 (.20–.28) | 5.0–7.0 (.20–.28) |
| | B | 8.5–10.5 (.33–.41) | 8.5–10.5 (.33–.41) |
| For power steering | | 10.5–14.5 (.41–.57) | 13.0–17.0 (.51–.67) |
| For air conditioning | | 6.5–7.5 (.26–.30) | 6.5–7.5 (.26–.30) |

A: Measure between the water pump pulley and the crankshaft pulley.
B: Measure between the water pump pulley and the generator.

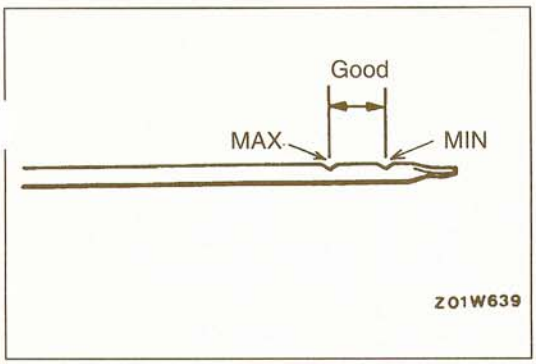


## 10. ENGINE OIL (Inspect oil Level) 00100260066

1. Check that the engine oil level is within the range indicated on the oil level gage.
2. Make sure that the engine oil is clean and free from coolant or gasoline, and that it has an appropriate viscosity grade.

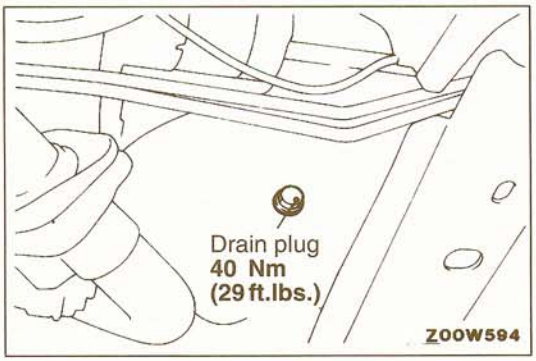


## (Change)

Use the specified oil. (Refer to P.00-31.)

1. After warming up the engine, remove the oil filler cap.
2. Remove the drain plug to allow the engine oil to drain.

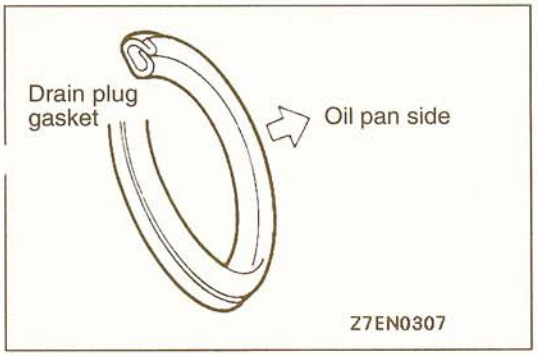


3. Replace the drain plug gasket with a new one, and then tighten the drain plug to the specified torque.

   NOTE
   Install the drain plug gasket so it faces in the direction shown in the illustration.

4. Pour new engine oil in through the oil filler.

   **Engine oil capacity:**
   **4.3 $dm^3$ (4.5 qts.) [excluding oil filter 0.3 $dm^3$ (1/2 qt.) and oil cooler 0.3$dm^3$ (1/2 qt.)]**

5. Start the engine and run it at idle for a few minutes.
6. Stop the engine and check to ensure that the engine oil level is within the level range indicated on the dip stick.

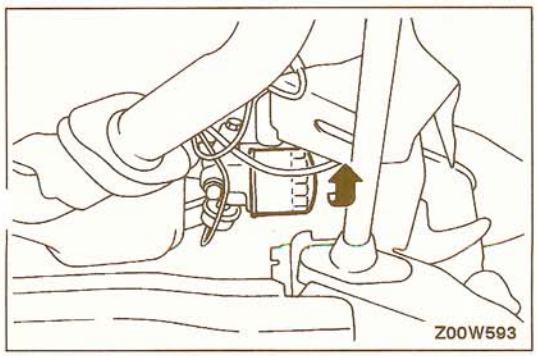


## 11. ENGINE OIL FILTER (Change) 00100270069

The quality of replacement filters varies considerably. Only high quality filters should be used to assure most efficient service.
Genuine oil filters require that the filter is capable of withstanding a pressure of 256 psi are high quality filters and are recommended as follows:

**Oil Filter Part Number:**
**Mitsubishi Genuine Parts: MD136790 or equivalent**

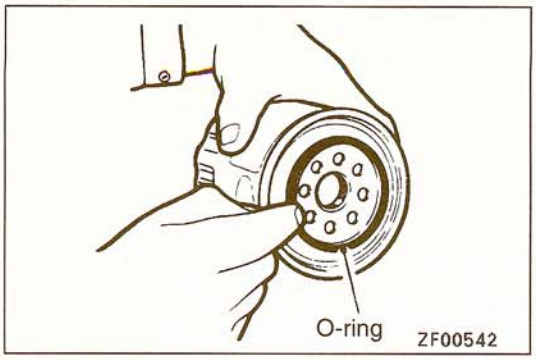


### ENGINE OIL FILTER SELECTION

This vehicle is equipped with a full-flow, throw-away oil filter. The same type of filter is recommended as a replacement filter for this vehicle. It is possible, particularly in cold weather that this vehicle may develop high oil pressure for a short duration. You should make sure that any replacement filter used on this vehicle is a high-quality filter and is capable of withstanding a pressure of 1,765 kPa (256 psi) [manufacturer's specifications] to avoid filter and engine damage. The following is a high-quality filter and is strongly recommended for use on this vehicle : Mitsubishi Engine Oil Filter P/N MD136790.

Any replacement oil filter should be installed in accordance with the oil filter manufacturer's installation instructions.

1. Remove the under cover.
2. Drain the engine oil by removing the oil drain plug.
3. Use an oil filter wrench to remove the engine oil filter.
4. Clean the surface of the filter bracket attachment.
5. Lubricate the O-ring of the new oil filter with a small amount of engine oil.
6. Screw on the oil filter by hand, and after the O-ring contacts the flange surface, tighten it another 3/4 turns with a filter wrench, etc. [approx. 14 Nm (10 ft.lbs.)].
7. Add new engine oil through the oil filler.
8. Race the engine two or three times to make sure that no engine oil leaks from the oil filter seal.
9. After stopping the engine, check the oil level and refill if necessary.

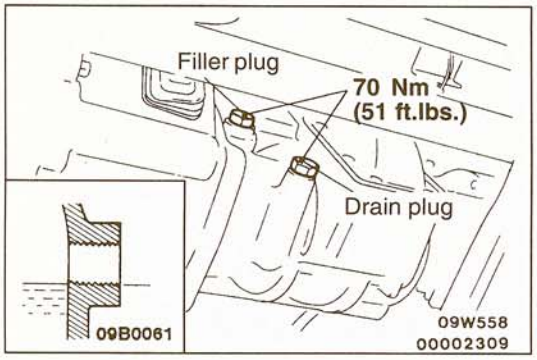


## 12. MANUAL TRANSMISSION (Check oil level)

00100280055

Inspect each component for evidence of leakage, and check the oil level by remaining the filler plug. If the oil is contaminated, replace it with new oil.

### INSPECTION

- With the vehicle on a level surface, remove the filler plug and check whether or not the oil is at the same level as the bottom of the threads.
- Check if the transmission oil is excessively dirty and if the viscosity is normal.

### REPLACEMENT OF TRANSMISSION OIL

1. Remove the drain plug to allow the transmission fluid to drain.
2. Replace the drain plug gasket with a new one, and then tighten the drain plug.
3. Apply a coating of sealant to the threaded part when installing the drain plug and the filler plug of the transmission.

   **Specified sealant: Three Bond 1105D or equivalent**
4. Fill with new oil through the filler plug until the oil level reaches the plug hole.

   **Manual transmission oil capacity: 2.5 $dm^3$ (2.4 qts.)**

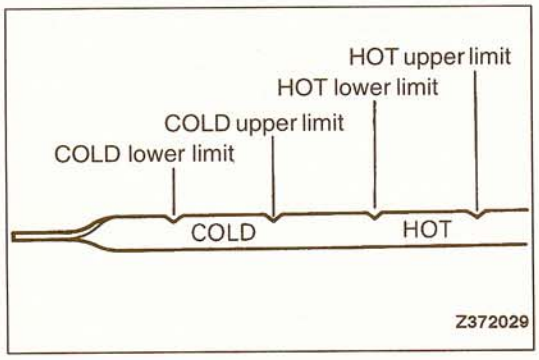


## 13. AUTOMATIC TRANSMISSION (Check the fluid level)

00100290072

Check the fluid level by removing the dipstick. If the fluid is contaminated, replace it with new fluid.

1. Place the vehicle on a level surface.
2. Wipe the area around the dipstick to remove accumulated dirt and then pull out the dipstick.
3. Move the selector lever to the "P" position and apply the parking brake, and then, start the engine.
4. Check that the engine idle speed and fluid operating temperature (50–80°C; 122–176°F) are normal.
5. Move the selector lever to each position in turn to fill the torque converter and hydraulic circuit with fluid. Then place the lever in the "N" position.
6. Check that the fluid level is in the "HOT" range of the dipstick. If the fluid level is low, add fluid until the level reaches the "HOT" range.

## 14. AUTOMATIC TRANSMISSION FLUID (Replace)

00100690018

Drain the fluid and check whether there is any evidence c contamination. Replenish with new fluid after the cause o any contamination has been corrected.

1. Place a large flat container beneath the drain plug.
2. Remove the drain plug to allow the transmission fluid to drain.
3. Replace the drain plug gasket with a new one, and then tighten the drain plug.
4. Pour 5 $dm^3$ (10.6 pints) of specified ATF into case through dipstick hole. [Total quantity of ATF required is approx. 7 $dm^3$ (14.8 pints). Actually however, approx. 5.5 $dm^3$ (11.6 pints) of fluid can be replaced because rest of fluid remains in torque converter.]

   **Specified fluid:**
   **DIAMOND ATF SP, ATF DEXRON II or equivalent**
5. Check the fluid level.

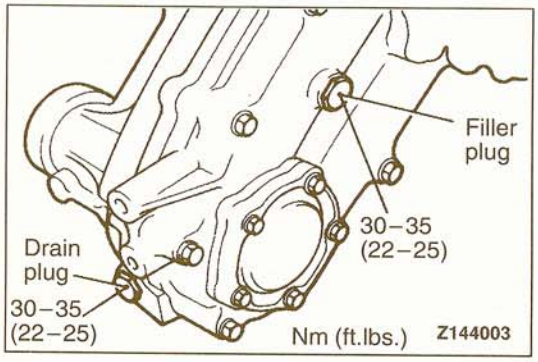


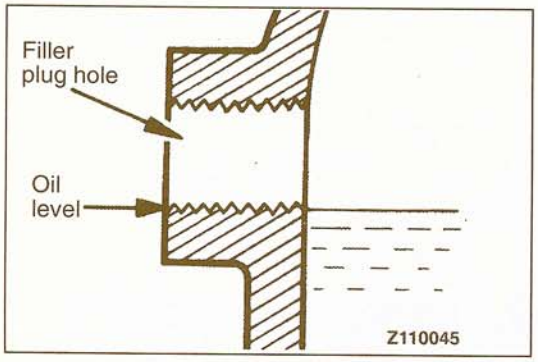


## 15. TRANSFER (Change oil)

00100300010

Drain the fluid and check whether there is any evidence of contamination. Replenish with new fluid after the cause of any contamination has been corrected.

1. With the vehicle on a flat, level surface, drain out the transfer oil.
2. Replace the packing with a new one, and then close the drain plug.
3. Pour new transfer oil in through the filler plug until it reaches the same level as the plug hole.

   **Total transfer oil capacity:**
   **<V5MT1, V4AW2> 2.3 $dm^3$ (2.4 qts)**
   **<V4AW3> 2.5 $dm^3$ (2.6 qts)**

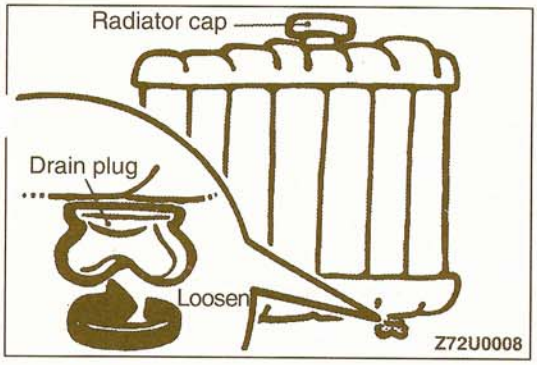


## 16. ENGINE COOLANT

00100310051

Check the cooling system parts such as the radiator, heater and oil cooler hoses, thermostat and the connections for leakage and damage.

### CHANGING COOLANT

1. Set the temperature control lever to the HOT position.
2. Remove the radiator cap, radiator drain plug and engine drain plug to drain the coolant.

   **Caution**
   **When removing the radiator cap, use care to avoid contact with hot coolant or steam. Place a shop towel over the cap and turn the cap counterclockwise a little to let the pressure escape through the vinyl tube. After relieving the steam pressure, remove the cap by slowly turning it counterclockwise.**
3. Remove the reserve tank and drain the coolant.
4. After completely draining the coolant, reinstall the drain plugs and flush the engine and radiator using a radiator cleaning fluid.
5. After the flushing is completed, completely drain the cleaning fluid and install the radiator and engine drain plugs.
6. Loosen the air bleed bolt. <3.0L-24 VALVE engine, 3.5 L engine>
7. By referring to the section on coolant (P.00-33), select an appropriate concentration for safe operating temperature within the range of 30 to 60%. Refill the system with a high quality ethylene glycol antifreeze at the selected concentration. A convenient mixture is a 50% water and 50% antifreeze solution [freezing point: –30°C (–32.8°F)]. (Pour in coolant until it overflows from the air bleed bolt hole, and then tighten the air bleed bolt. <3.0L-24 VALVE engine, 3.5 L engine>)

   **Engine coolant total capacity (including heater and coolant reserve tank): 9.5 dm³ (10.0 qts.)**
8. Reinstall the radiator cap.
9. Start the engine and let it warm up until the thermostat opens.
10. After repeatedly racing the engine up to 3,000 rpm several times, stop the engine.
11. Remove the radiator cap after the engine has become cold, and pour in coolant up to the entrance for water supplying.
12. Add coolant to the reserve tank between the "FULL" and "LOW" mark if necessary.

    **Caution**
    **Do not overfill the reserve tank.**

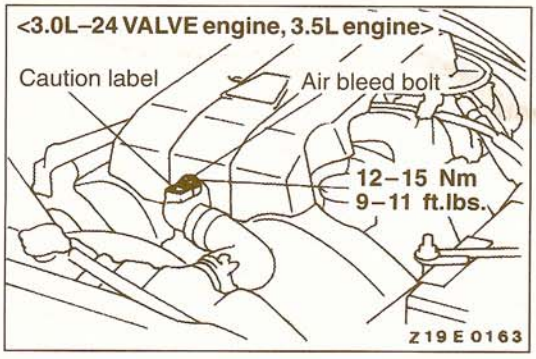

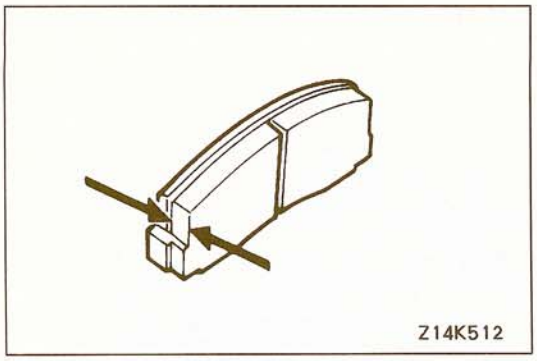


## 17. DISC BRAKE PADS (Inspect for wear)

00100320030

Check for fluid contamination and wear. Replace the complete set of pads if defective.

**Thickness of lining**
**Limit: 2.0 mm (.79 in.)**

**Caution**
**The pads for the right and left wheels should be replaced at the same time. Never split or intermix brake pad sets. All four pads must be replaced as a complete set.**

## 18. BRAKE HOSES (Check for deterioration or leaks)

00100340036

Inspection of brake hoses and tubing should be included in all brake service operations.
The hoses should be checked for:

1. Correct length, severe surface cracking, pulling, scuffing or worn spots. (If the fabric casing of the hoses is exposed by cracks or abrasion in the rubber hose cover, the hoses should be replaced. Eventual deterioration of the hose and possible bursting failure may occur.)
2. Incorrect installation, casing twisting or interference with wheel, tire or chassis.

## 19. BALL JOINT AND STEERING LINKAGE SEALS (Inspect for grease leaks and damage)

00100350039

1. These components, which are permanently lubricated at the factory, do not require periodic lubrication. Damaged seals and boots should be replaced to prevent leakage or contamination of the grease.
2. Inspect the dust cover and boots for proper sealing, leakage and damage, and replace them if defective.

## 20. DRIVE SHAFT BOOTS (Inspect for grease leaks and damage)

00100360032

1. These components, which are permanently lubricated at the factory, do not require periodic lubrication. Damaged seals and boots should be replaced to prevent leakage or contamination of the grease.
2. Inspect the dust cover and boots for proper sealing, leakage and damage, and replace them if defective.

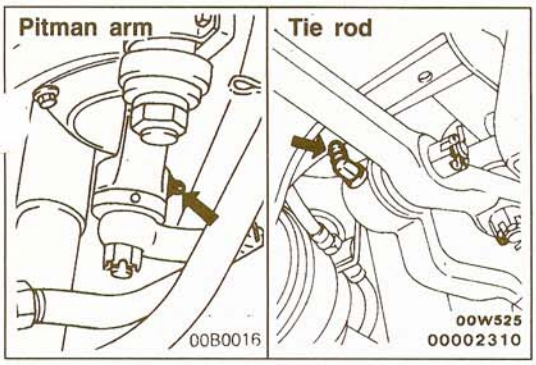


## 21. BALL JOINTS WITH GREASE FITTING (Lubricate with grease)

00100700018

Fill with multipurpose grease at the grease fitting till the grease come out of the dust seal of the pitman arm, tie rod, lower control arm and upper control arm.

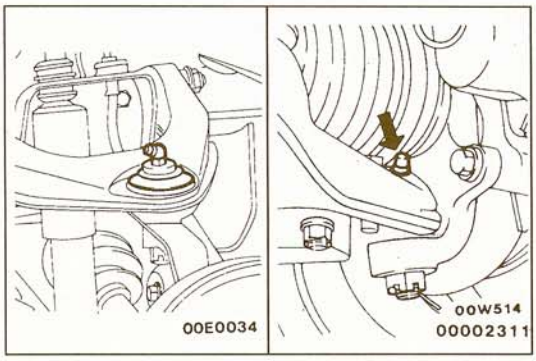


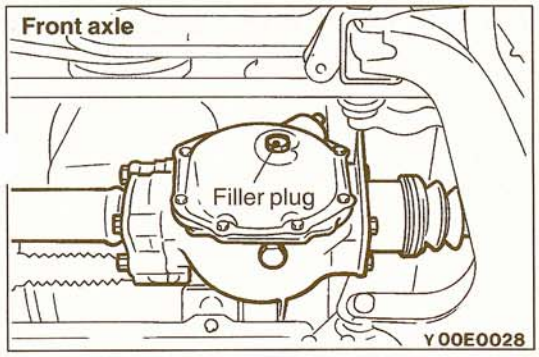


## 22-1. FRONT AXLE AND REAR AXLE (CONVENTIONAL DIFFERENTIAL) (Inspect oil level)

00100710011

Remove the filler plug and inspect the oil level at the bottom of the filler hole. If the oil level is slightly below the filler hole, the condition is satisfactory.

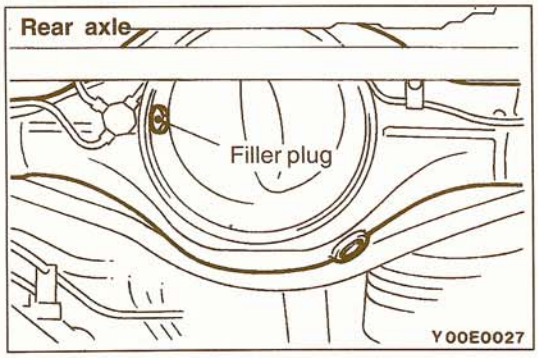


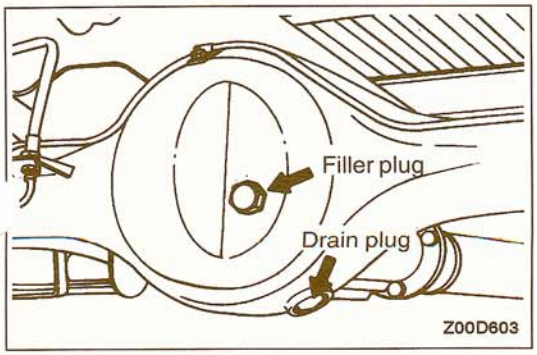


## 22-2. REAR AXLE OIL (LIMITED-SLIP DIFFERENTIAL) (Change)

00100720014

Before changing the rear axle oil, check that there is no oil leakage from the rear axle housing.
Remove the drain plug and drain out the oil.
Replace the oil plug, and then pour new oil in through the filler hole.

**Oil capacity:**
**2.6 $dm^3$ (2.6 qts.) <3.0L Engine>**
**3.2 $dm^3$ (3.3 qts.) <3.5L Engine>**

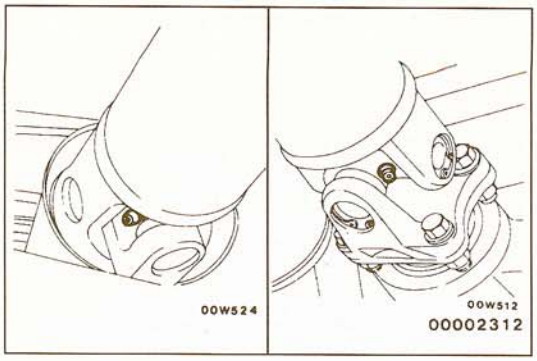


## 23. PROPELLER SHAFT JOINTS (Lubricate with grease)

00100730017

Lubricate the propeller shaft joints with grease.
The propeller shaft joints should be repacked w. multipurpose grease.

## 24. EXHAUST SYSTEM (CONNECTION PORTION OF MUFFLER, PIPINGS AND CONVERTER HEAT SHIELDS) (Check and service as required)

00100580032

1. Check for holes and gas leaks due to damage, corrosion, etc.
2. Check the joints and connections for looseness and gas leaks.
3. Check the hanger rubber and brackets for damage.

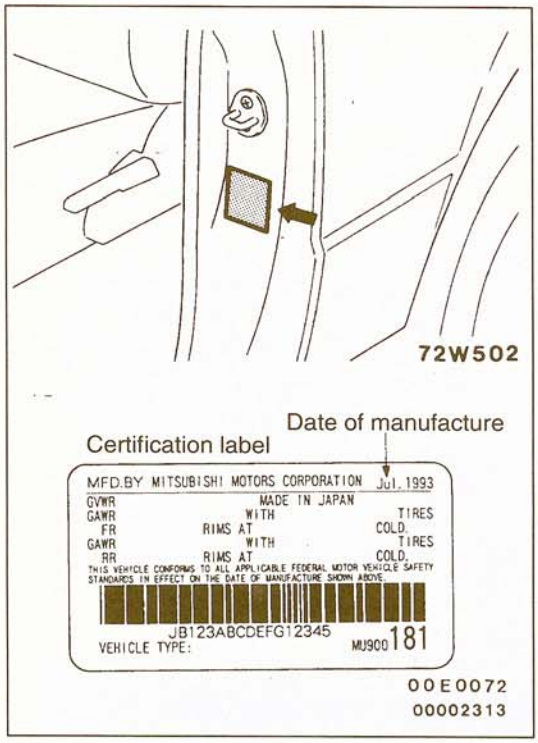


## 25. SRS MAINTENANCE (SRS component check: damage, function, connection to wiring harness, etc.)

00100370035

The SRS must be inspected by an authorized dealer 10 year after the car manufacture date shown on the certificatic label located on the left center pillar.

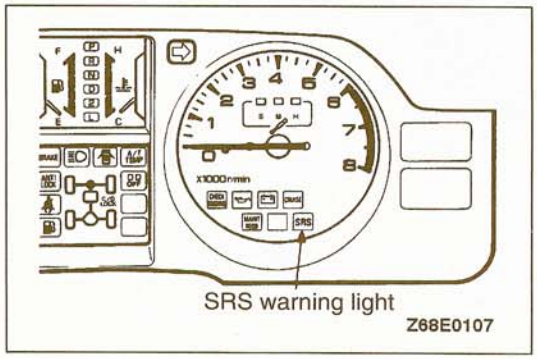


### SRS WARNING LIGHT CHECK

Turn the ignition key to the ON position. Does the SRS warning light illuminate for about 7 seconds and turn "OFF" and then remain extinguished for at least 45 second?
If yes, the SRS system is functioning properly. If not, refer to GROUP 52B –Troubleshooting.

TSB Revision

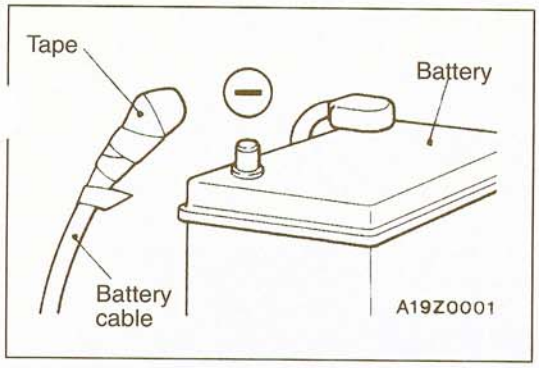


## SRS COMPONENT VISUAL CHECK

1. Turn the ignition key to the LOCK position, disconnect the negative battery cable and tape the terminal.

   **Caution**
   **Wait at least 60 seconds after disconnecting the battery cable before doing any further work. The SRS system is designed to retain enough voltage to deploy the air bag for a short time even after the battery has been disconnected, so serious injury may result from unintended air bag deployment if work is done on the SRS system immediately after the battery cable is disconnected.**

2. Remove the floor console assembly. (Refer to GROUP 52A – Floor Console.)

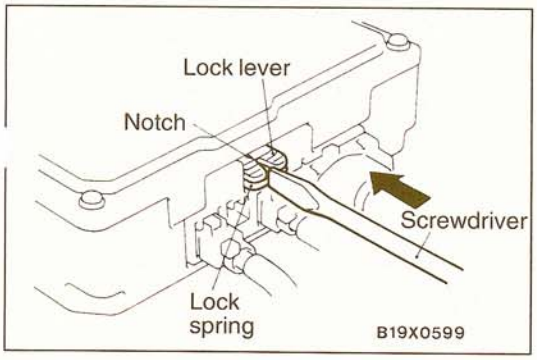


3. Place a flat-tipped (–) screwdriver against the lock spring at the lock lever notch and push the spring toward the unit.

   **Caution**
   **Do not use excessive force to raise the lock lever (green).**

4. Disconnect the red 14-pin connector from the SRS diagnosis unit while pressing down the lock of the connector.

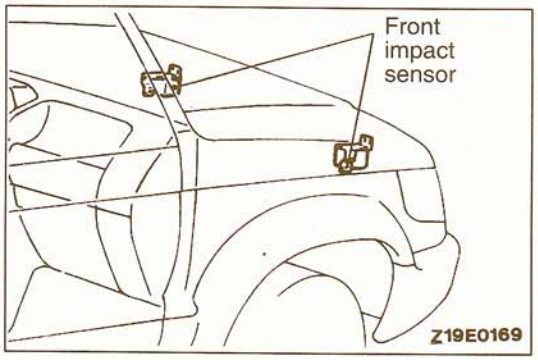


## FRONT IMPACT SENSORS

1. Check that the arrows on the sensors face toward the front of the vehicle.
2. Check the radiator support panel and front impact sensor for deformation or rust.

   **Caution**
   **The SRS may not activate if a front impact sensor is not installed properly, which could result in serious injury or death to the vehicle's driver.**

3. Check the wiring front impact sensor harness for binds, connector for damage, and check the terminals for deformation.
   Replace sensor and/or wiring harness if they fail the visual check. (Refer to GROUP 52B – SRS Service Precautions and GROUP 52B – Front Impact Sensor.)

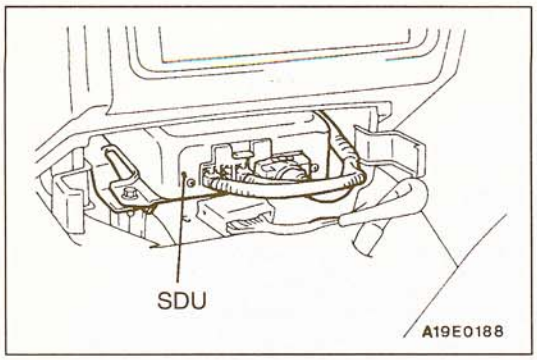


## SRS DIAGNOSIS UNIT (SDU)

1. Check the SDU case and brackets for dents, cracks, deformation or rust.

**Caution**
**The SRS may not activate if a SRS diagnosis unit (with built-in safing impact sensor) is not installed properly, which could result in serious injury or death to the vehicle's driver.**

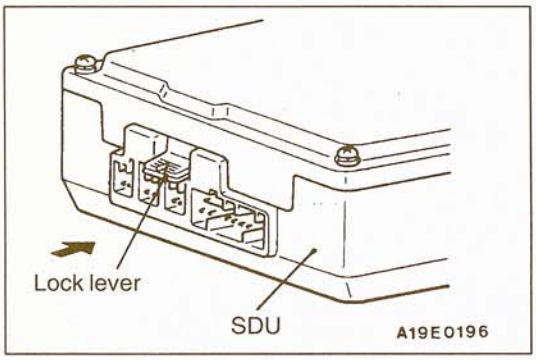


2. Check the connectors and lock lever for damage, and check the terminals for deformation or rust.
Replace the SDU if it fails the visual check. (Refer to GROUP 52B – SRS Diagnosis Unit.)

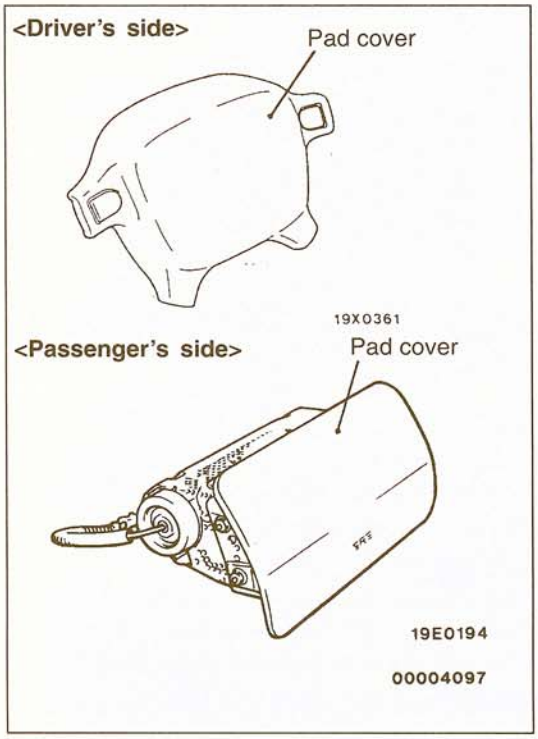


## AIR BAG MODULE, STEERING WHEEL AND CLOCK SPRING

1. Remove the air bag module, steering wheel and clock spring.
(Refer to GROUP 52B – Air Bag Module and Cloc Spring.)

**Caution**
**The removed air bag module should be stored in a clean, dry place with the pad cover face up.**

2. Check the pad cover for dents, cracks or deformation.

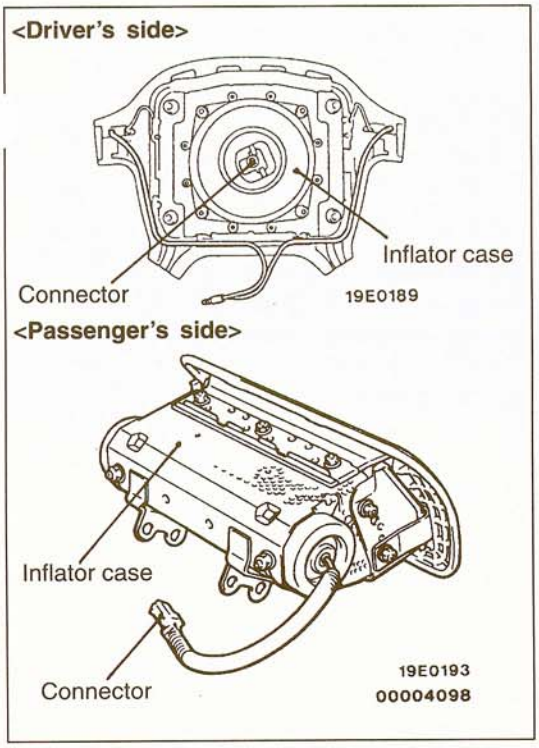


3. Check the connector for damage and deformed terminals, and check the harness for binds.
4. Check the air bag inflator case for dents, cracks or deformation.
5. Check the harness which is built into the steering wheel and connectors for damage, and check the terminals for deformation.

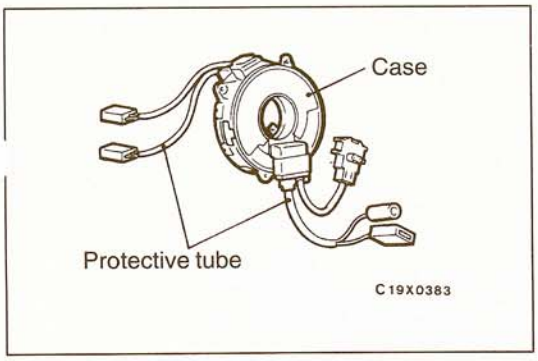


6. Check the clock spring connectors and protective tube for damage, and terminals for deformities.
7. Visually check the case for damage.

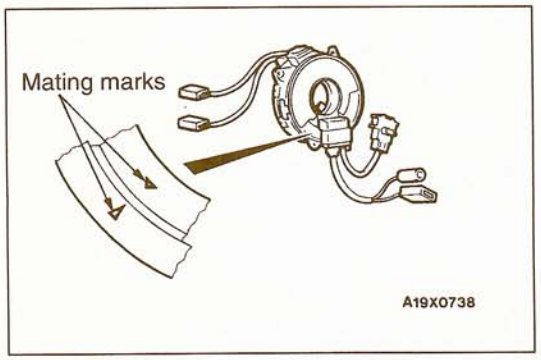


8. Align the mating marks of the clock spring, and after turning the front wheels to the straight-ahead position, install the clock spring to the column switch.

**Mating marks alignment**

After turning the clock spring fully clockwise, turn it approximately 3 1/3 turns counterclockwise until the mating marks are aligned.

**Caution**

**If the clock spring's mating mark is not properly aligned, the steering wheel may not be completely rotational during a turn, or the flat cable within the clock spring may be severed, obstructing normal operation of the SRS and possibly leading to serious injury to the vehicle's driver and passenger.**

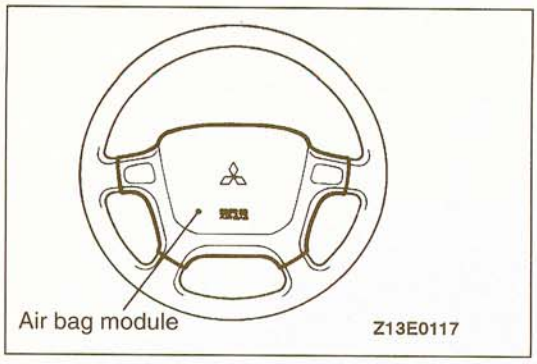


9. Install the steering column covers, steering wheel and air bag module.
10. Check the steering wheel for noise, binds or difficult operation.
11. Check the steering wheel for excessive free play.
    REPLACE ANY VISUALLY INSPECTED PART IF IT FAILS THAT INSPECTION. (Refer to GROUP 52B – Air Bag Module and Clock Spring.)

**Caution**
**The SRS may not activate if any of the above components are not installed properly, which could result in serious injury or death to the vehicle's driver and passenger.**

## WIRING HARNESS

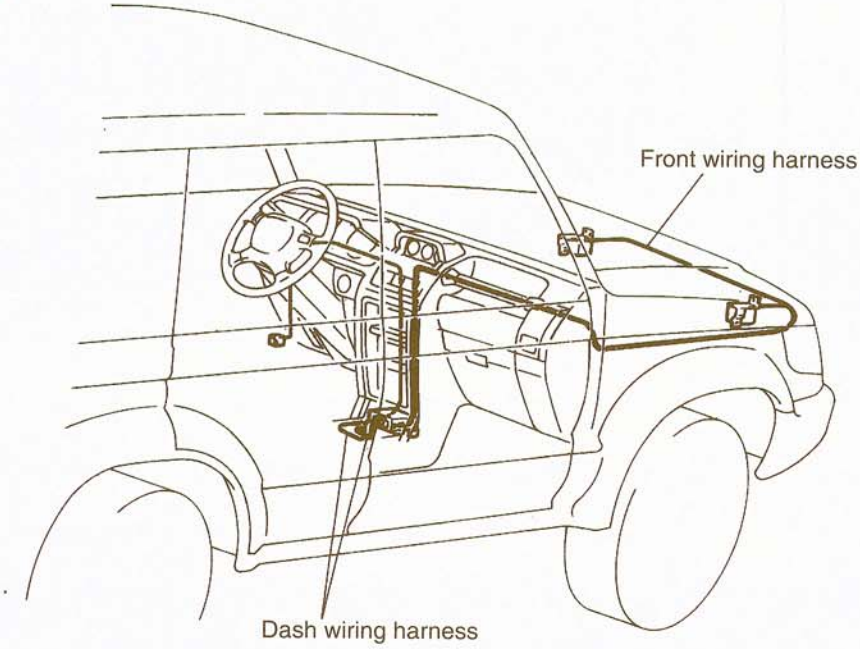


1. Check the connector for poor connection.
2. Check the harness for binds check the connectors for damage, and check the terminals for deformation.
   REPLACE ANY CONNECTORS OR HARNESS THAT FAIL THE VISUAL INSPECTION. (Refer to GROUP 52B – SRS Service Precautions.)

**Caution**
**The SRS may not activate if SRS harnesses or connectors are damaged or improperly connected, which could result in serious injury or death to the vehicle's driver and passenger.**

# MAIN SEALANT AND ADHESIVE TABLE

00100380045

## SEALANTS FOR ENGINE ACCESSORIES

| Application | Recommended brand |
|---|---|
| Sealing between rocker cover and camshaft bearing cap (4G6 DOHC and 6G7 engines only) | 3M ATD Part No. 8660 or equivalent |
| Sealing between semi-circular packing and rocker cover and between semi-circular packing and cylinder head | |
| Oil pressure switch (except 4G1 and 6G7 engines) | |
| Engine coolant temperature switch, Engine coolant temperature sensor, Thermo valve, Thermo switch, Joints, Engine coolant temperature gauge unit (large size) | 3M Nut Locking Part No. 4171 or equivalent |
| Engine coolant temperature gauge unit (small size, MD091056 only) | 3M ATD Part No. 8660 or equivalent |
| Oil pan (except 4G5 engine) | MITSUBISHI GENUINE Part No. MD970389 or equivalent |

## SEALING BETWEEN GLASS AND WEATHERSTRIP

| Application | Recomended brand |
|---|---|
| Sealing between tempered glass and weatherstrip | 3M ATD Part No.8513 or equivalent |
| Sealing between body flange and weatherstrip | 3M ATD Part No. 8509 or equivalent |
| Sealing between laminated glass and weatherstrip | |

## ADHESION WITH RIBBON SEALER

| Application | Recomended brand |
|---|---|
| Waterproof film for door, Fender panel, Splash shield, Mud guard, Rear combination light | 3M ATD Part No. 8625 or equivalent |

## ADHESIVES FOR INTERIOR TRIM

| APPLICATION | Recomended brand |
|---|---|
| Adhesion of polyvinylchloride sheet | 3M Part No. EC-1368 or equivalent |
| Adhesion of door weatherstrip to body | 3M ATD Part No. 8001 or 3M ATD Part No. 8011 or equivalent |
| Sealing between grommet or packing and metal seal | 3M ATD Part No. 8513 or equivalent |
| Adhesion of headlining and other interior trim materials | 3M Part No. EC–1368 or 3M ATD Part No. 8080 or equivalent |
| Adhesion of fuel tank to pad | |

## BODY SEALANT

| Application | Recomended brand |
|---|---|
| Sealing of sheet metal, drip rail, floor, body side panel, trunk, front panel and the like joints | 3M ATD Part No. 8531 or 3M ATD Part No. 8646 or equivalent |
| Sealing of tailgate hinges | |

**TSB Revision**

## CHASSIS SEALANT

| Application | Recomended brand |
|---|---|
| Sealing of flange surfaces and threaded portions | 3M ATD Part No. 8659 or equivalent |
| Fuel gauge unit packing | |
| Sealing of flange surfaces, threaded portions, packing and dust cover<br>• Differential carrier packing<br>• Dust covers for ball joint and linkage<br>• Steering gear box packing and shims<br>• Steering gear housing rack support cover and top cover<br>• Mating surface of knuckle arm flange | 3M ATD Part No. 8663 or equivalent |
| Sealing between accelerator arm bracket and toeboard | Drying sealant |
| Sealant for drum brake shoe hold-down pin and wheel cylinder | 3M ATD Part No.8155 or equivalent |

## FAST BONDING ADHESIVE

| Application | Recommended brand |
|---|---|
| Adhesion of all materials except polyethylene, polypropylene, fluorocarbon resin or other materials with highly absorbent surface | 3M ATD Part No. 8155 or equivalent |

## ANAEROBIC FAST BONDING ADHESIVES

| Application | Recommended brand |
|---|---|
| Fixing of bolts and screws<br>• Tightening of drive gear to differential case<br>• Bolts for coupling tilt steering upper column with lower column | 3M Stud locking Part No. 4170 or equivalent |
| Fixing of bearing, fan, pulley and gear connections | |
| Sealing of small recess or flange surface | |
| STeering angle stopper bolt (jeep) | 3M Nut locking Part No. 4171 or equivalent |

## UNDERCOAT

| Application | Recommend brand |
|---|---|
| Undercoat | 3M ATD Part No. 8864 or equivalent |

# ENGINE

## CONTENTS

11109000153

ENGINE <3.0L> ..... 11A

ENGINE OVERHAUL <3.0L> ..... 11B

ENGINE <3.5L> ..... 11C

ENGINE OVERHAUL <3.5L> ..... 11D

NOTES

# ENGINE <3.0L>

## CONTENTS

11109000160


### ENGINE <3.0L-SOHC-12 VALVE>

- CAMSHAFT OIL SEAL ..... 16
- CRANKSHAFT OIL SEALS ..... 18
  - Front Oil Seal ..... 18
  - Rear Oil Seal ..... 19
- CYLINDER HEAD GASKET ..... 23
- ENGINE ASSEMBLY ..... 13
- ENGINE OIL COOLER ..... 30
- GENERAL SPECIFICATIONS ..... 2
- OIL PAN AND OIL SCREEN ..... 21
- ON-VEHICLE SERVICE ..... 5
  - Basic Idle Speed Adjustment ..... Refer to GROUP 13A
  - Compression Pressure Check ..... 9
  - Curb Idle Speed Check ..... 7
  - Drive Belt Tension Check and Adjustment ... 5
  - Idle Mixture Check ..... 8
  - Ignition Timing Check ..... 6
  - Lash Adjuster Check ..... 11
  - Manifold Vacuum Check ..... 10
  - Timing Belt Tension Adjustment ..... 10
- SEALANTS AND ADHESIVES ..... 3
- SERVICE SPECIFICATIONS ..... 2
- SPECIAL TOOLS ..... 3
- TIMING BELT ..... 26
- TROUBLESHOOTING ..... 4

### ENGINE <3.0L-SOHC-24 VALVE>

- CAMSHAFT OIL SEAL ..... 46
- CRANKSHAFT OIL SEALS ..... 48
  - Front Oil Seal ..... 48
  - Rear Oil Seal ..... 49
- CYLINDER HEAD GASKET ..... 55
- ENGINE ASSEMBLY ..... 43
- ENGINE OIL COOLER ..... 63
- GENERAL SPECIFICATIONS ..... 31
- OIL PAN AND OIL SCREEN ..... 51
  - Oil Pan, Lower ..... 51
  - Oil Pan, Upper and Oil Screen ..... 53
- ON-VEHICLE SERVICE ..... 35
  - Basic Idle Speed Adjustment ..... Refer to GROUP 13A
  - Compression Pressure Check ..... 40
  - Curb Idle Speed Check ..... 37
  - Dashpot Check and Adjustment ..... 39
  - Drive Belt Tension Check and Adjustment ..... 35
  - Idle Mixture Check ..... 38
  - Ignition Timing Check ..... 36
  - Lash Adjuster Check ..... 41
  - Manifold Vacuum Check ..... 41
- SEALANT ..... 32
- SERVICE SPECIFICATIONS ..... 31
- SPECIAL TOOLS ..... 32
- TIMING BELT ..... 58
- TROUBLESHOOTING ..... 33

# ENGINE <3.0L-SOHC-12 VALVE>

11100020028

## GENERAL SPECIFICATIONS

| Items | | | Specifications |
|---|---|---|---|
| Type | | | V-type, Over Head Camshaft |
| Number of cylinders | | | 6 |
| Bore mm (in.) | | | 91.1 (3.587) |
| Stroke mm (in.) | | | 76.0 (2.992) |
| Piston displacement $cm^3$ (cu. in.) | | | 2,972 (181.4) |
| Compression ratio | | | 8.9 |
| Firing order | | | 1-2-3-4-5-6 |
| Valve timing | Intake valve | Opens (BTDC) | 19° |
| | | Closes (ABDC) | 59° |
| | Exhaust valve | Opens (BBDC) | 59° |
| | | Closes (ATDC) | 19° |
| Valve overlap | | | 38° |
| Intake valve duration | | | 258° |
| Exhaust valve duration | | | 258° |

## SERVICE SPECIFICATIONS

11100030168

| Items | | | Standard value | Limit |
|---|---|---|---|---|
| Drive belt tension N (lbs.) | Generator V-ribbed type | When checked | 350–600 (79–132) | – |
| | | When new belt is installed | 500–700 (110–154) | – |
| | | When used belt is installed | 400 (88) | – |
| | A/C compressor | When checked | 350–400 (77–88) | – |
| | | When new belt is installed | 500–600 (110–132) | – |
| | | When used belt is installed | 350–400 (77–88) | – |
| Drive belt deflection <Reference value> mm (in.) | Generator V-ribbed type | When checked | 8.0–10.0 (.32–.39) | – |
| | | When new belt is installed | 6.5–8.0 (.26–.32) | – |
| | | When used belt is installed | 9.0 (.35) | – |
| | Power steering pump | When checked | 9.0–14.5 (.35–.57) | – |
| | | When new belt is installed | 8.0 (.32) | – |
| | | When used belt is installed | 10.0 (.39) | – |
| | A/C compressor | When checked | 6.5–7.5 (.26–.29) | – |
| | | When new belt is installed | 5.0–6.0 (.20–.24) | – |
| | | When used belt is installed | 6.5–7.5 (.26–.29) | – |
| Timing belt tension N (lbs.) | | | 200–300 (44.1–66.1) | – |
| Basic ignition timing at idle | | | 5° BTDC ±3° | – |
| Actual ignition timing at curb idle | | | Approx. 15° BTDC | – |
| CO contents % | | | 0.5 or less | – |
| HC contents ppm | | | 100 or less | – |
| Curb idle speed r/min | | | 700±100 | – |
| Compression pressure (250–400 r/min) kPa (psi) | | | 1,200 (171) | min. 890 (127) |
| Compression pressure difference of all cylinder kPa (psi) | | | – | max. 100 (14) |
| Intake manifold vacuum at curb idle kPa (in. hg) | | | – | min. 60 (18) |

**TSB Revision**

## SEALANTS AND ADHESIVES

11100050157

| Items | Specified sealant or adhesive |
|---|---|
| Oil pan | MITSUBISHI GENUINE PART No. MD97089 or equivalent |
| Rocker cover and camshaft bearing cap seal | 3M ATD Part No. 8660 or equivalent |
| Timing belt cover gasket | 3M ATD Part No. 8001 or equivalent |

## SPECIAL TOOLS

11100060150

| Tool | Tool number and name | Supersession | Application |
|---|---|---|---|
|  | MD998727<br>Oil pan remover | General service tool<br>(Use a scraper and exercise care) | Removal of oil pan |
|  | MB991502<br>Scan tool (MUT-II) | – | Checking of engine idling speed |
|  | ROM pack | – | |
| 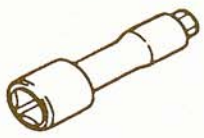 | MD998051<br>Wrench, cylinder head bolt | MD998051-01 | Loosening and tightening of cylinder head bolt |
| 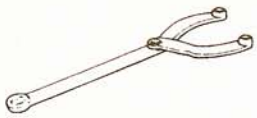 | MB990767<br>End yoke holder | MB990767-01 | Supporting the sprocket and shaft pulley during removing and installation |
|  00004292 | MIT308239<br>Pulley holding pins | – | Supporting the sprocket and shaft pulley during removing and installation |
|  | MD998716<br>Crankshaft wrench | MD998716-01 | Used if the crankshaft needs to be rotated to attach the timing belt, etc. |
| 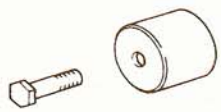 | MD998713<br>Camshaft oil seal installer | MD998713-01 | Press fitting the camshaft oil seal |

**TSB Revision**

| Tool | Tool number and name | Supersession | Application |
|---|---|---|---|
| 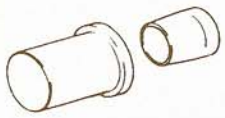 | MD998717<br>Crankshaft front oil seal installer | – | Press-fitting of crankshaft front oil seal |
|  | MD998718<br>Crankshaft rear oil seal installer | MD998718-01 | Press-fitting of crankshaft rear oil seal |

# TROUBLESHOOTING

11100070108

| Trouble Symptom | Probable Cause | Remedy |
|---|---|---|
| Compression is too low | Blown cylinder head gasket | Replace the gasket. |
| | Worn or damaged piston rings | Replace the rings. |
| | Worn piston or cylinder | Repair or replace the piston and/or the cylinder block. |
| | Worn or damaged valve seat | Repair or replace the valve and/or the seat ring. |
| Drop in oil pressure | Engine oil level is too low | Check the engine oil level. |
| | Malfunction of oil pressure switch | Replace the oil pressure switch. |
| | Clogged oil filter | Install a new filter. |
| | Worn oil pump gears or cover | Replace the gears and/or the cover. |
| | Thin or diluted engine oil | Change the engine oil to the correct viscosity. |
| | Stuck (open) oil relief valve | Repair the relief valve. |
| | Excessive bearing clearance | Replace the bearings. |
| Oil pressure too high | Stuck (closed) oil relief valve | Repair the relief valve. |
| Noisy valves | Malfunction of lash adjuster | Replace the lash adjuster. |
| | Thin or diluted engine oil (low oil pressure) | Change the engine oil. |
| | Worn or damaged valve stem or valve guide | Replace the valve and/or the guide. |
| Connecting rod noise/ main bearing noise | Insufficient oil supply | Check the engine oil level. |
| | Thin or diluted engine oil | Change the engine oil. |
| | Excessive bearing clearance | Replace the bearings. |
| Timing belt noise | Incorrect belt tension | Adjust the belt tension. |

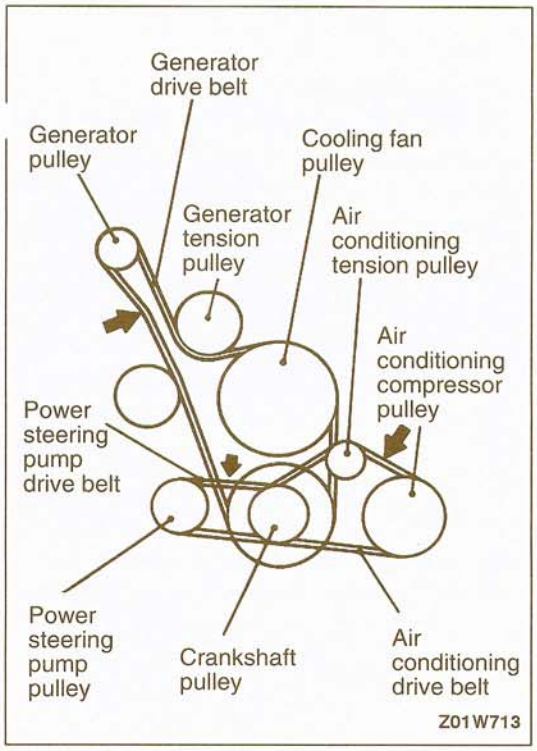


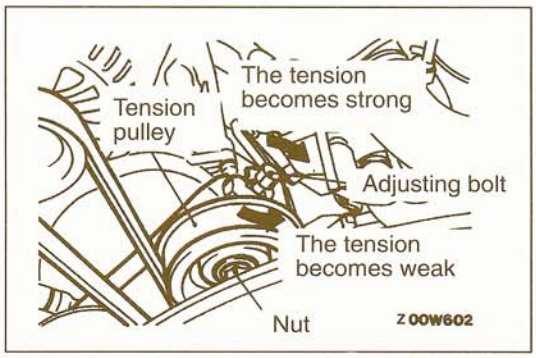


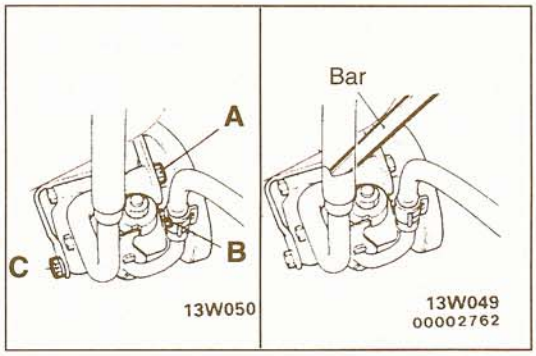


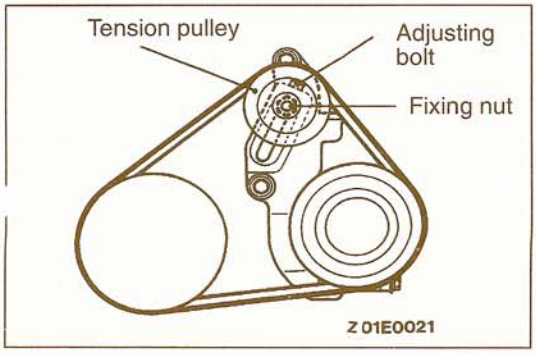


# ON-VEHICLE SERVICE

11100310026

## DRIVE BELT TENSION CHECK AND ADJUSTMENT

Check the belt tension by using a belt-tension gage or apply 98 N (22 lbs.) of force to the belt midway between the pulleys as shown in the illustration, and measure the deflection.

**Standard value:**

| Item | | Check value | Adjustment value | |
|---|---|---|---|---|
| | | | New belt | Used belt |
| For generator | Tension N (lbs.) | 350–600 (77–132) | 500–700 (110–154) | 400 (88) |
| | Deflection <Reference value> mm (in.) | 8.0–10.0 (.32–.39) | 6.5–8.0 (.26–.32) | 9.0 (.35) |
| For power steering | Deflection mm (in.) | 9.0–14.5 (.35–.57) | 8.0 (.32) | 10.0 (.39) |
| For A/C | Tension N (lbs.) | 35–40 (77–88) | 50–60 (110–132) | 35–40 (77–80) |
| | Deflection <Reference value> mm (in.) | 6.5–7.5 (.26–.29) | 5–6 (.20–.24) | 6.5–7.5 (.26–.29) |

### GENERATOR DRIVE BELT TENSION ADJUSTMENT

(1) Loosen the tension pulley fixing nut.
(2) Adjust the belt tension using the adjusting bolt.
(3) Tighten the fixing nut.
(4) Crank the engine once or more.
(5) Check the belt tension.

### POWER STEERING OIL PUMP DRIVE BELT DEFLECTION ADJUSTMENT

(1) Loosen power steering fixing bolts (A), (B) and (C).
(2) Move the power steering pump and the tension belt moderately and adjust.
(3) Tighten the fixing bolts (A), (B) and (C) in that order.
(4) Crank the engine once or more.
(5) Check the belt tension.

### AIR CONDITIONING COMPRESSOR DRIVE BELT TENSION ADJUSTMENT

(1) Loosen the tension pulley fixing nut.
(2) Adjust the belt tension using the adjusting bolt.
(3) Tighten the fixing nut.
(4) Crank the engine once or more.
(5) Check the belt tension.

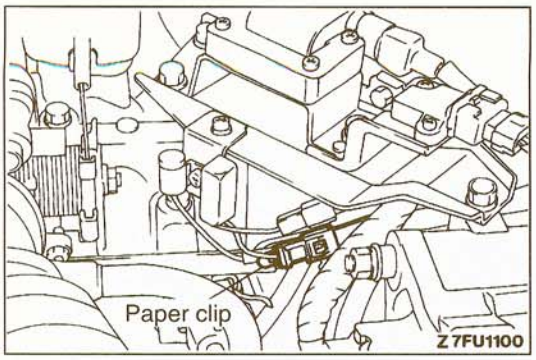


## IGNITION TIMING CHECK

11100170082

(1) Before inspection and adjustment, set the vehicle to the following condition.
- Engine coolant temperature: 80–95°C (176–203°F)
- Lights and all accessories: OFF
- Transmission: Neutral (P for A/T)

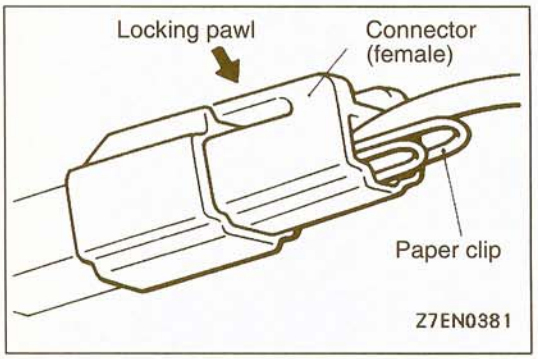


(2) Insert a paper clip into the 1-pin connector between the primary side of the ignition coil and the noise filter. The connector should not be disconnected.

**Caution**
**Insert the paper clip along the terminal from the opposite side to the locking pawl of the female connector, as shown in the illustration.**

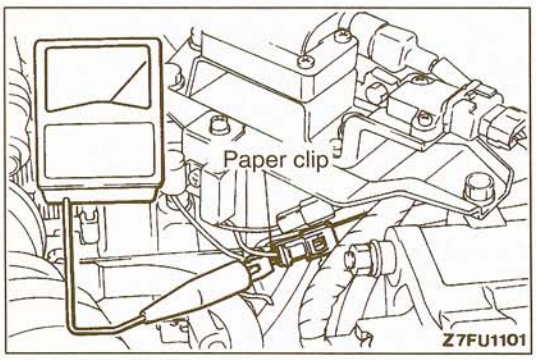


(3) Connect a primary voltage detection-type tachometer to the paper clip.

NOTE
Do not use the scan tool. If the scan tool is connected to the data link connector, the ignition timing will be unchanged instead of reverting to the standard ignition timing.

(4) Connect a timing light.
(5) Start the engine and run it at idle.
(6) Check that the idle speed is at the standard value.

**Standard value: 700±100 r/min**

(7) Turn the ignition switch to OFF.
(8) Disconnect the waterproof female connector from the ignition timing adjustment connector (brown).

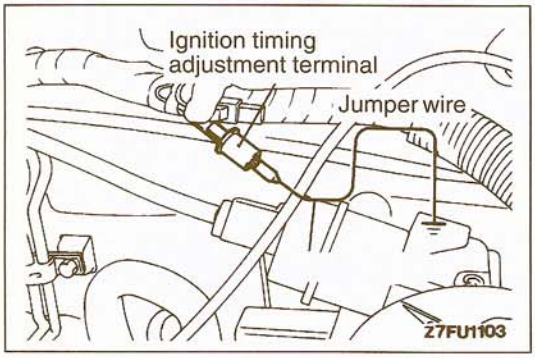


(9) Use a jumper wire to ground the ignition timing adjustment terminal.

NOTE
Grounding the ignition timing adjustment terminal will change the ignition timing to standard.

(10) Start the engine and run it at idle.
(11) Check the basic ignition timing.

**Standard value: 5° BTDC±3°**

**TSB Revision**

(12) If the ignition timing is not within the standard value range, refer to GROUP 13A – On-vehicle Inspection of MFI Components and check the crankshaft position sensor.
(13) Stop the engine, remove the jumper lead from the ignition timing adjustment connector (brown), and return the connector to its original condition.
(14) Start the engine and check that the ignition timing is at the standard value.

**Standard value: Approx. 15°BTDC**

NOTE
1. Ignition timing is variable within about ±7°, even under normal operating conditions.
2. It is automatically further advanced by about 5° from 15° BTDC at higher altitudes.

## CURB IDLE SPEED CHECK

11100190187

(1) Before inspection, set the vehicle to the following condition.
- Engine coolant temperature: 80–95°C (176–203°F)
- Lights and all accessories: OFF
- Transmission: Neutral (P for A/T)

(2) Check the basic ignition timing.

**Standard value: 5° BTDC±3°**

(3) After turning the ignition switch to OFF, connect a tachometer or the scan tool to the data link connector (white).

NOTE
For the procedures for setting the tachometer, refer to P.11A-6.

(4) Start the engine and run it at idle.
(5) Run the engine at idle for 2 minutes.
(6) Check the curb idle speed.

**Standard value: 700±100 r/min**

NOTE
The idle speed is adjusted automatically by the idle air control (IAC) system.

(7) If there is a deviation from the standard value refer to GROUP 13A–Check Chart Classified by Trouble Symptoms, and check the MFI components.

## IDLE MIXTURE CHECK

11100210159

(1) Before inspection, set the vehicle to the following condition.
- Engine coolant temperature: 80–95°C (176–203°F)
- Lights and all accessories: OFF
- Transmission: Neutral (P for A/T)

(2) Check to be sure that the basic ignition timing is at the standard value.

**Standard value: 5° BTDC±3°**

(3) After turning the ignition switch to OFF, connect a tachometer, or connect the scan tool to the data link connector.

NOTE
For the procedures for setting the tachometer, refer to P.11A-6.

(4) Start the engine and race it at an engine speed of 2,500 r/min for two minutes.
(5) Connect a CO and HC tester.
(6) Check the CO contents and the HC contents while the engine is idling.

**Standard value:**
**CO contents: 0.5% or less**
**HC contents: 100 ppm or less**

(7) If the concentrations are outside the standard values, check the following items.
- Diagnostic output
- Closed loop control
  (If closed loop control is being carried out normally, the heated oxygen sensor output signal will vary between 0–400 mV and 600–1,000 mV while the engine is idling.)
- Fuel pressure
- Injectors
- Ignition coil, spark plug cables, spark plugs
- Leaks from EGR system and EGR valve
- Evaporative emission control system
- Compression pressure

NOTE
If the results of the checks for all items are normal but the CO and HC concentrations still exceed the standard values, replace the three-way catalyst.

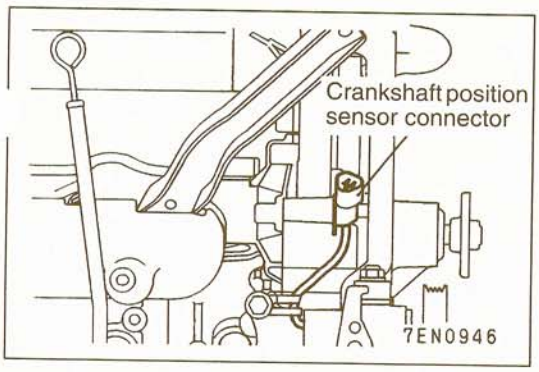


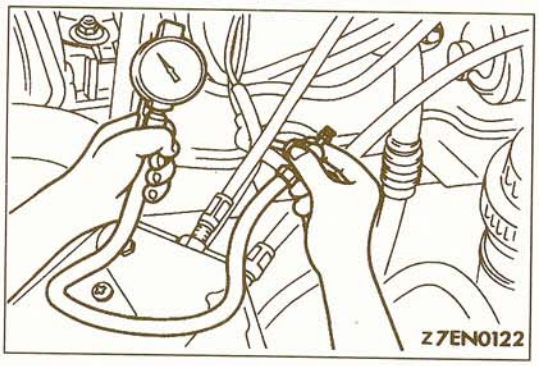


## COMPRESSION PRESSURE CHECK 11100260185

(1) Before inspection, check that the engine oil, starter and battery are normal. Also, set the vehicle to the following condition.
- Engine coolant temperature: 80–95°C (176–203°F)
- Lights and all accessories: OFF
- Transmission: Neutral (P for A/T)

(2) Disconnect the spark plug cables.
(3) Remove all of the spark plugs.
(4) Disconnect the crankshaft position sensor connector.

NOTE
Doing this will prevent the engine control module from carrying out ignition and fuel injection.

(5) Cover the spark plug hole with a rag, and after the engine has been cranked, check that no foreign material is adhering to the rag.

**Caution**
1. **Keep away from the spark plug hole when cranking.**
2. **Do not let water, oil, fuel, etc. enter the cylinder through cracks, or these heated materials will gush out from the spark plug hole, which is dangerous.**

(6) Set the compression gage to a spark plug mounting hole.
(7) Crank the engine with the throttle valve fully open and measure the compression pressure.

**Standard value: 1200 kPa (171 psi.) / 250 – 400 r/min**
**Limit: min. 890 kPa (127 psi.) / 250 – 400 r/min**

(8) Measure the compression of all the cylinders, and check that the pressure differences of the cylinders are below the limit.

**Limit: max. 100 kPa (14 psi.)**

(9) If there is a cylinder with compression or a compression difference that is outside the limit, pour a small amount of engine oil through the spark plug hole, and repeat the operations in steps (6) to (8).
   1) If the compression increases after oil is added, the cause of the malfunction is a worn or damaged piston ring and/or cylinder inner surface.
   2) If the compression does not rise after oil is added, the cause is a burnt or defective valve seat, or pressure leaking from the gasket.

(10) Reconnect the crankshaft position sensor connector.
(11) Reinstall the spark plugs and spark plug cables.
(12) Use the scan tool to erase the diagnostic trouble codes, or disconnect the negative battery cable for 10 seconds or more and then re-connect it.

NOTE
This will erase the diagnostic trouble code resulting from the distributor connector being disconnected.

## MANIFOLD VACUUM CHECK

11100270188

(1) Before inspection, set the vehicle to the following condition.

- Engine coolant temperature: 80–95°C (176–203°F)
- Lights and all accessories: OFF
- Transmission: Neutral (P for A/T)

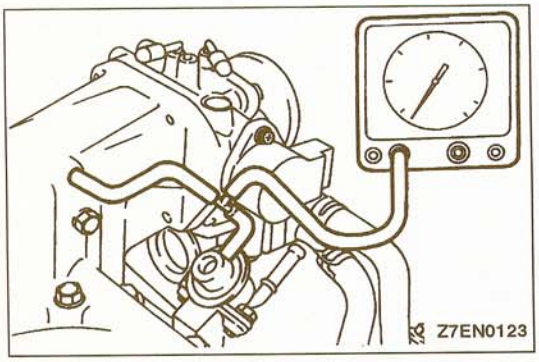


(2) Connect a tachometer or connect the scan tool to the data link connector.

NOTE
For the procedures for setting up the tachometer, refer to P.11A-6.

(3) Connect a three-way joint to the vacuum hose between the intake manifold plenum and the fuel-pressure regulator, and then connect a vacuum gage.
(4) Start the engine and check that the idle speed is within the standard value range.
Take a reading of the vacuum gage.

**Limit: min. 60 kPa (18 in.Hg)**

## TIMING BELT TENSION ADJUSTMENT

11100280051

(1) Remove the access cover.

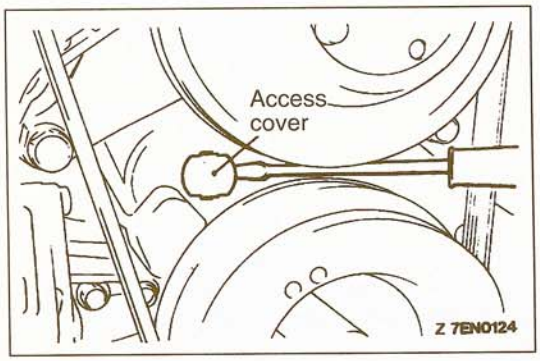


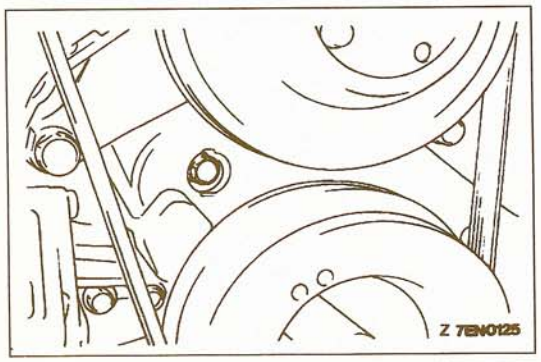


(2) Loosen the timing belt tensioner mounting bolt 1 or 2 turns.
(3) Turn the crankshaft two turns in the clockwise direction.
(4) Tighten the timing belt tensioner mounting bolt.
(5) Attach the access cover.

**TSB Revision**

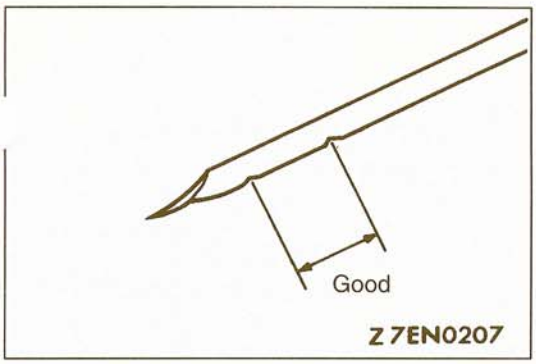


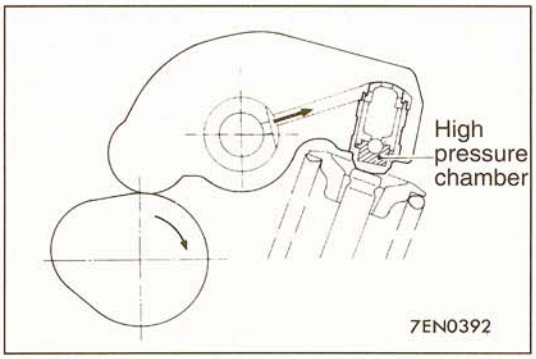


## LASH ADJUSTER CHECK

11100290146

NOTE
Directly after starting the engine or while the engine is running, if an abnormal sound (knocking) that seems to be coming from the lash adjuster is heard and doesn't stop, carry out the following inspection.

(1) Check the engine oil and replenish or replace the oil if necessary.

NOTE
- If there is a small amount of oil, air is sucked in through the oil strainer and gets into the oil passage.
- If the amount of oil is greater than normal, oil is mixed by the crank, and a large amount of air is mixed into the oil.
- Air and oil will not separate easily in oil that has degenerated, and the amount of air mixed into the oil will increase.

If the air mixed into the oil due to the above reasons gets into the high pressure chamber of the lash adjuster, the air inside the high pressure chamber will be compressed when the valve is open and the lash adjuster will over-compress, resulting in an abnormal noise when the valve closes. This is the same effect as if the valve clearance is adjusted by mistake to be too large.
Here, if the air inside the lash adjuster is released, then the operation has returned to normal.

(2) Start the engine and gently race * the engine several times (10 times or less).
If the abnormal noise is stopped by the racing, air has been released from the high pressure chamber, and the functioning of the lash adjuster has returned to normal.
* After gradually increasing the engine speed from idle speed to 3000 r/min (over 30 seconds), gradually reduce the engine speed back to idle speed (over 30 seconds).

NOTE
- Parking on a slope for a long period will decrease the amount of oil inside the lash adjuster, and then air may get into the high pressure chamber when starting the engine.
- After parking the vehicle for long periods, the oil drains out of the oil passage, and it takes time for the oil to be supplied to the lash adjuster, so air can get into the high pressure chamber.

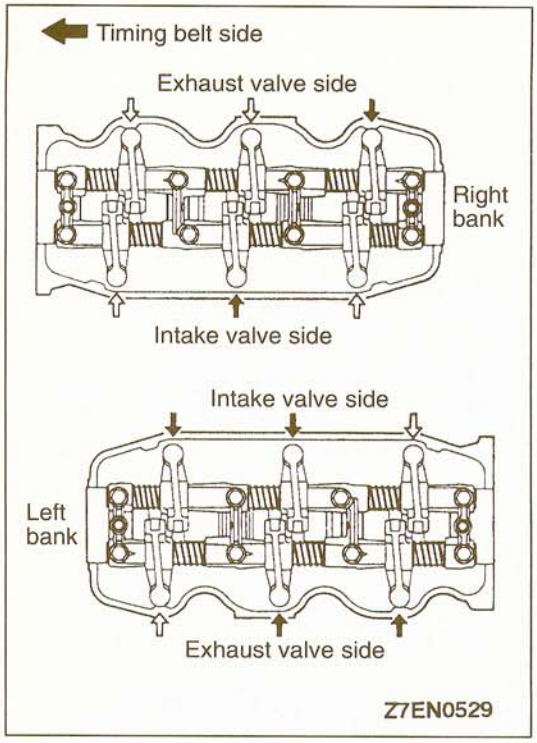


(3) If the abnormal noise is not stopped by the racing, check the lash adjuster by the following procedure.
1) Stop the engine.
2) Set the engine No. 1 cylinder to the compressior top dead center position.
3) Push the rocker arm in the locations indicated by the white arrow mark as shown in the illustration at left to check if the rocker arm moves down or not.
4) Slowly turn the crankshaft 360° clockwise.
5) Check the rocker arm in the locations indicated by the black arrow mark as shown in the illustration at left using the same procedure as in step 3).

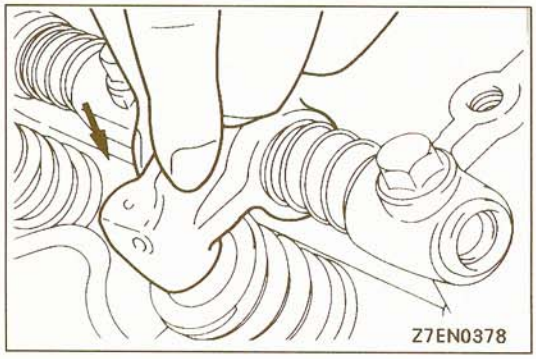


6) If the rocker arm can be lowered easily when the part of the rocker arm which is directly above the top of the lash adjuster is pressed, the lash adjuster is defective and should be replaced with a new part. Furthermore, when replacing the lash adjuster, bleed all of the air from the lash adjuster and then install. After this, check that there is no abnormality by carrying out the inspection in steps 1) to 5).

NOTE
- A leak-down test can be carried out to accurately determine whether the lash adjuster is defective or not.
- For the procedures for the leak-down test and air bleeding of the lash adjuster, refer to the Engine Service Manual.

Furthermore, if the rocker arm feels extremely stiff and cannot be lowered when it is pressed, the lash adjuster is normal, so investigate for another cause of the abnormality.

# ENGINE ASSEMBLY

11200100152

## REMOVAL AND INSTALLATION

**Pre-removal Operation**
- The Hood Removal (Refer to GROUP 42 – Hood.)
- The Radiator Removal (Refer to GROUP 14 – Radiator.)
- Under Skid Plate, Undercover Removal
- Front Exhaust Pipe Removal (Refer to GROUP 15 – Exhaust Pipe, Muffler and Catalytic Converter.)
- Transmission and Transfer Assembly Removal (M/T: Refer to GROUP 22 – Transmission and Transfer Assembly.) (A/T: Refer to GROUP 23 – Transmission and Transfer Assembly.)

**Post-installation Operation**
- Transmission and Transfer Assembly Installation (M/T: Refer to GROUP 22 – Transmission and Transfer Assembly.) (A/T: Refer to GROUP 23 – Transmission and Transfer Assembly.)
- Front Exhaust Pipe Installation (Refer to GROUP 15 – Exhaust Pipe, Muffler and Catalytic Converter.)
- Under Skid Plate, Undercover Installation
- Radiator Installation (Refer to GROUP 14 – Radiator.)
- Hood Installation (Refer to GROUP 42 – Hood.)
- Engine Adjustment
- Accelerator Cable Adjustment (Refer to GROUP 17 – On-vehicle Service.)
- Engine Oil Supplying and Checking

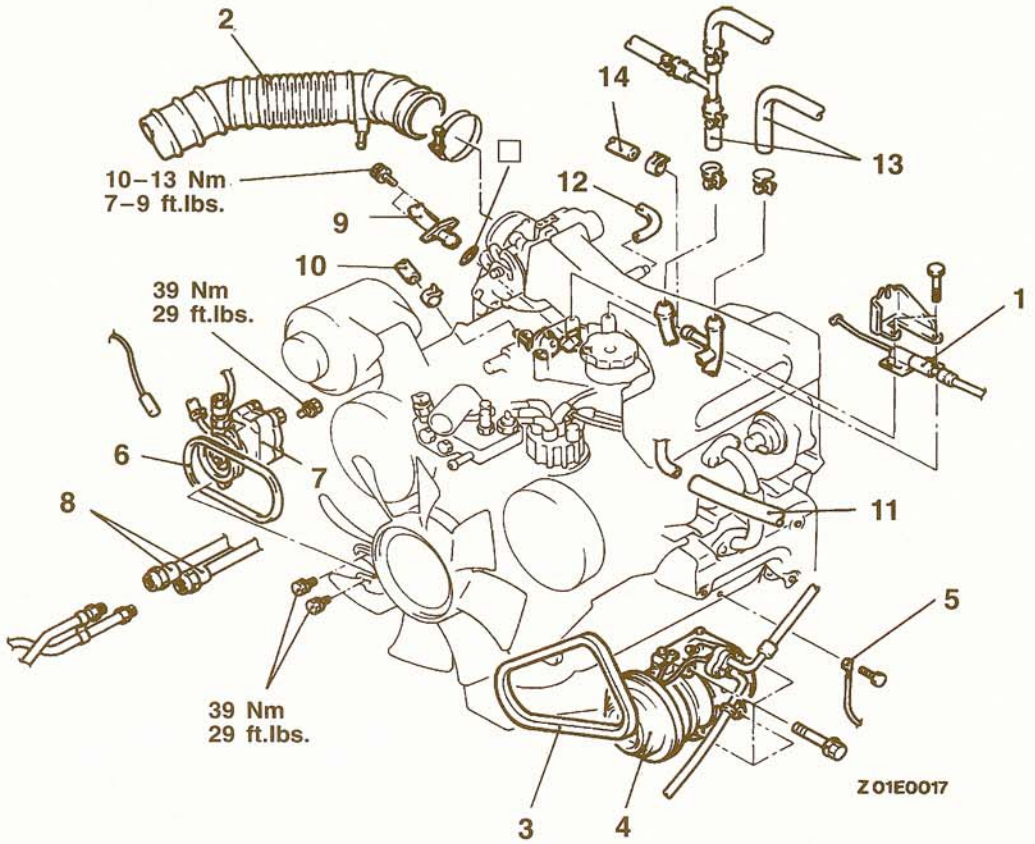


**Removal steps**

1. Accelerator cable connection
2. Air intake hose
3. Drive belt <A/C>
◀A▶ 4. Compressor <A/C>
5. Ground cable connection
6. Drive belt (Power steering)
◀A▶ 7. Oil pump (Power steering)
◀B▶ ▶B◀ 8. Oil cooler hose connection
9. High pressure fuel hose connection
10. Fuel return hose connection
11. Vacuum hose connection
12. Brake booster vacuum hose connection
13. Heater hose connections
14. Heater hose B connection

**TSB Revision**

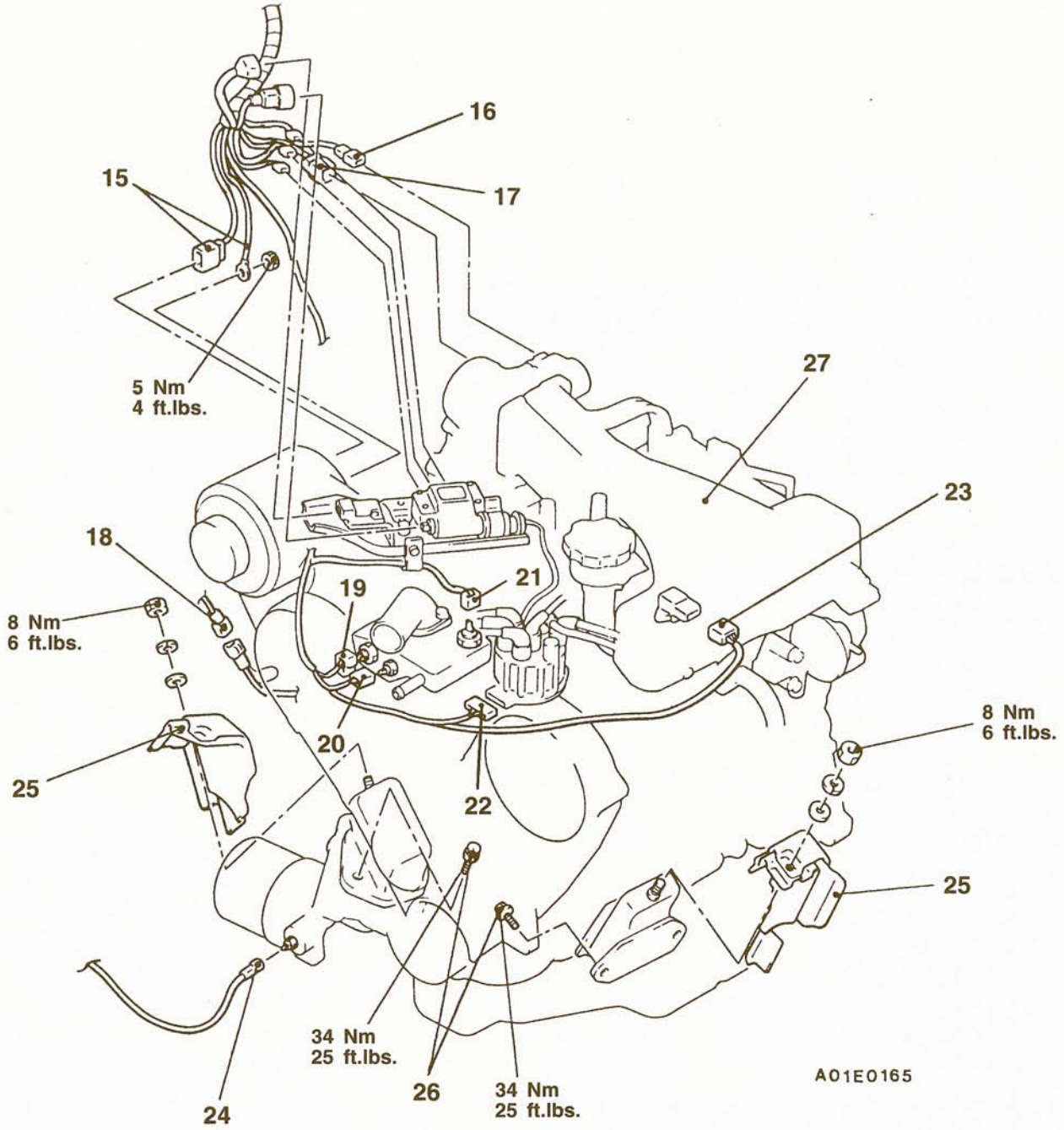


15. Generator connector
16. IAC motor connector
17. TPS connector
18. Crankshaft position sensor connector
19. Engine coolant temperature sensor connector
20. Thermo switch connector <A/T>
21. Engine coolant temperature gage unit connector
22. Distributor signal generator connector
23. Manifold differential pressure sensor connector
24. Oil pressure gage unit connector
25. Heat protectors
26. Engine mounting bolt
◀C▶ ▶A◀ 27. Engine assembly

TSB Revision

## REMOVAL SERVICE POINTS

### ◀A▶ COMPRESSOR <A/C>/OIL PUMP (POWER STEERING) REMOVAL

Remove the oil pump and air conditioning compressor (with the hose attached).

NOTE
Suspend the removed oil pump (by using wire or similar material) at a place where no damage will be caused during removal and installation of the engine assembly.

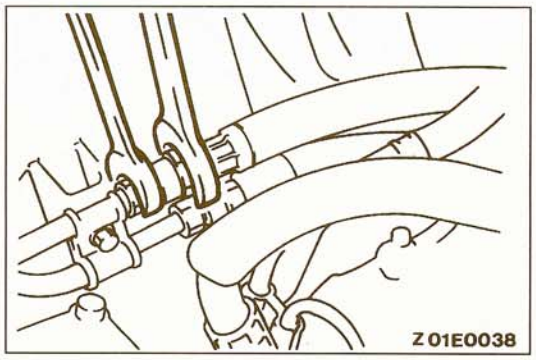


### ◀B▶ OIL COOLER HOSE CONNECTION REMOVAL

Use a spanner or similar tool to disconnect the oil cooler hose.

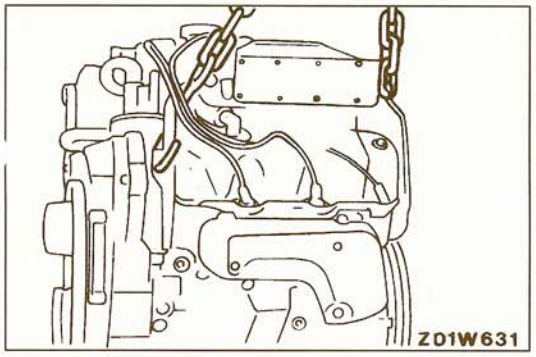


### ◀C▶ ENGINE ASSEMBLY REMOVAL

(1) Check that all cables, hoses, harness connectors, etc. are disconnected from the engine.
(2) Lift the chain block slowly to remove the engine assembly upward from the engine compartment.

## INSTALLATION SERVICE POINTS

### ▶A◀ ENGINE ASSEMBLY INSTALLATION

Install the engine assembly. When doing so, check carefully that all pipes and hoses are connected, and that none are twisted, damaged, etc.

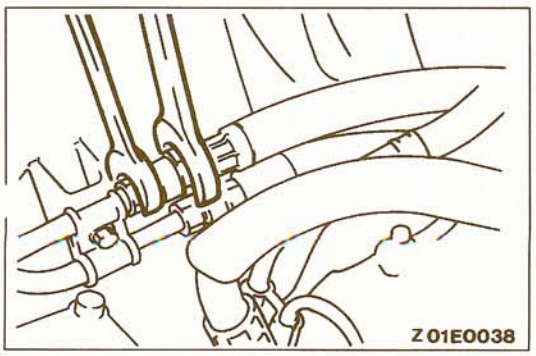


### ▶B◀ OIL COOLER HOSE CONNECTION

Use a spanner or similar tool to connect the oil cooler hose.

# CAMSHAFT OIL SEAL

11200220032

## REMOVAL AND INSTALLATION

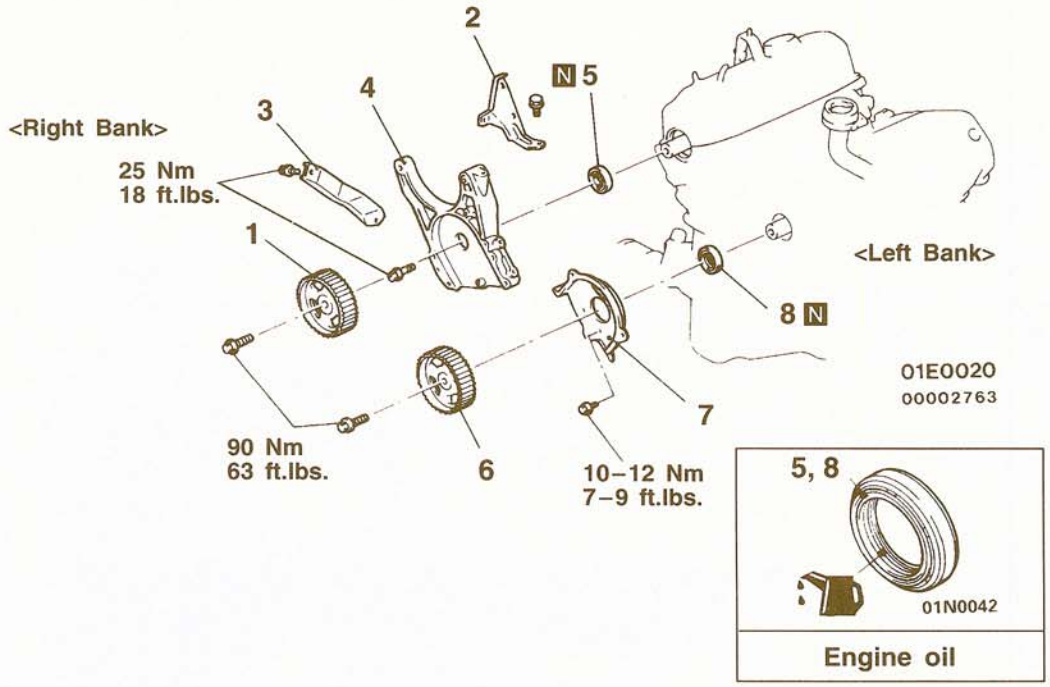


**Removal steps <Right Bank>**

- Generator (Refer to GROUP 16 – Generator.)
- Timing Belt (Refer to P.11A-26.)

◀A▶ 1. Camshaft sprocket
2. Cooling fan stay
3. Generator bracket stay
4. Generator bracket
◀B▶ ▶A◀ 5. Oil seal

**Removal steps <Left bank>**

- Timing Belt (Refer to P.11A-26.)

◀A▶ 6. Camshaft sprocket
7. Timing belt rear cover
◀B▶ ▶A◀ 8. Oil seal

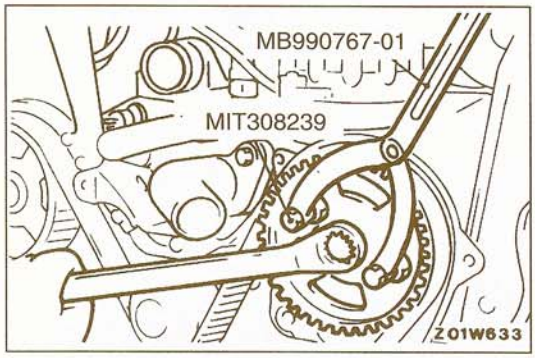


## REMOVAL SERVICE POINTS

### ◀A▶ CAMSHAFT SPROCKET REMOVAL

TSB Revision

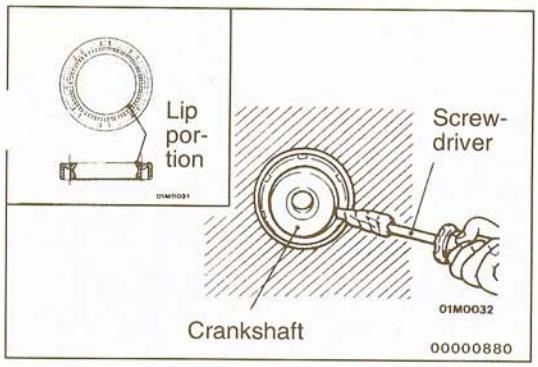


### ◀B▶ OIL SEAL REMOVAL

(1) Cut out a portion in the lip of the camshaft oil seal.
(2) Cover the tip of a screwdriver with a cloth and apply it to the cutout in the oil seal to pry off the oil seal.

**Caution**
**Take care not to damage the camshaft and cylinder head.**

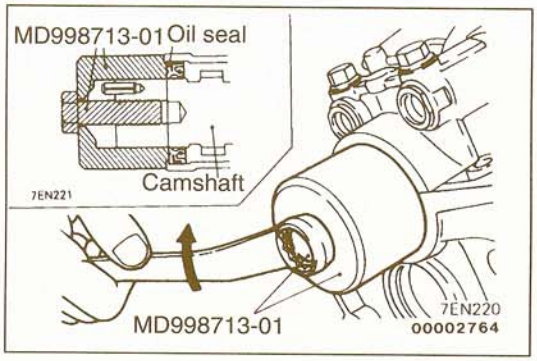


## INSTALLATION SERVICE POINTS

### ▶A◀ OIL SEAL INSTALLATION

(1) Apply a slight amount of engine oil to the circumference of the lip of the camshaft oil seal.
(2) Use the special tool to insert the oil seal.

# CRANKSHAFT OIL SEALS

11200340110

## FRONT OIL SEAL
## REMOVAL AND INSTALLATION

**Pre-removal and Post-installation Operation**
- Timing Belt Removal (Refer to P.11A-26.)

**Adjustment**
- Engine Adjustment

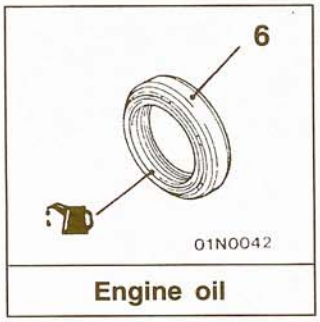


Engine oil

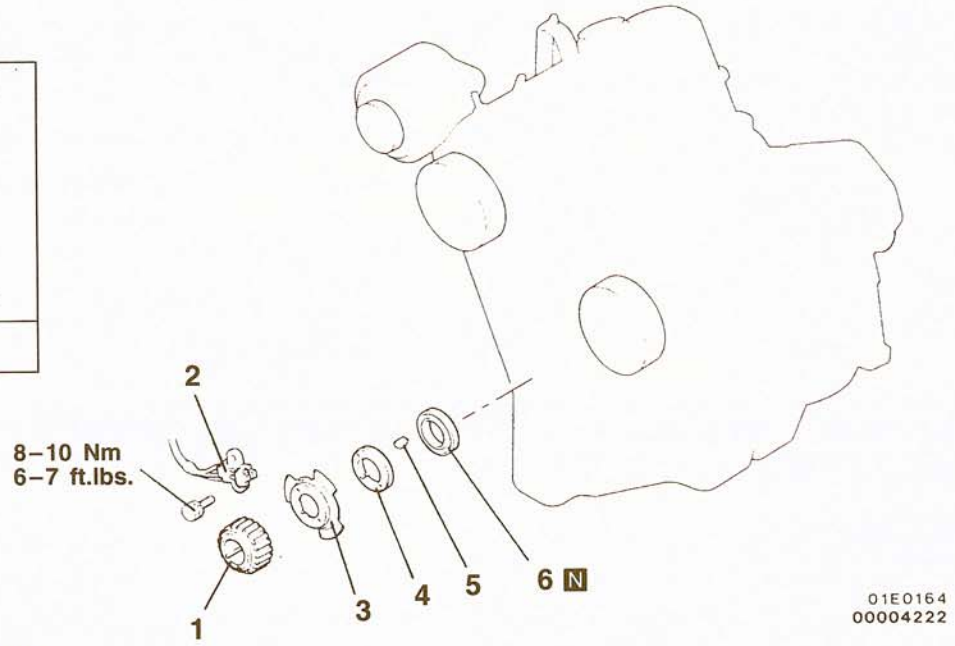


**Removal steps**
1. Crankshaft sprocket
2. Crankshaft position sensor
3. Crankshaft sensing blade
4. Crankshaft spacer
5. Key
- ◀A▶ ▶A◀ 6. Oil seal

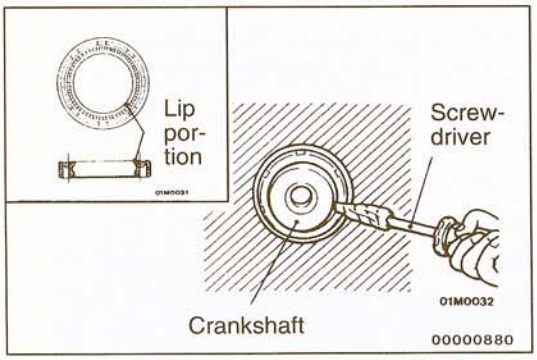


### REMOVAL SERVICE POINT

#### ◀A▶ OIL SEAL REMOVAL

(1) Cut out a portion in the lip of the crankshaft oil seal.
(2) Cover the tip of a screwdriver with a cloth and apply it to the cutout in the oil seal to pry off the oil seal.

**Caution**
**Take care not to damage the crankshaft and oil pump case.**

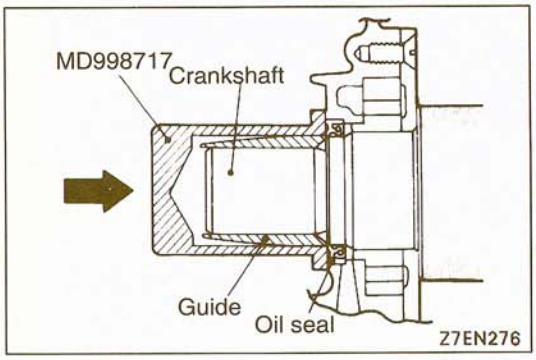


### INSTALLATION SERVICE POINT

#### ▶A◀ OIL SEAL INSTALLATION

Use the special tool to tap the oil seal into the oil pump case.

NOTE
Tap it until it is flush with the surface.

**TSB Revision**

## REAR OIL SEAL
## REMOVAL AND INSTALLATION

11200370119

**Pre-removal and Post-installation Operation**
Removal and Installation
- Transmission
  (M/T: Refer to GROUP 22 – Transmission and Transfer Assembly.)
  (A/T: Refer to GROUP 23 – Transmission and Transfer Assembly.)
- Clutch <M/T>

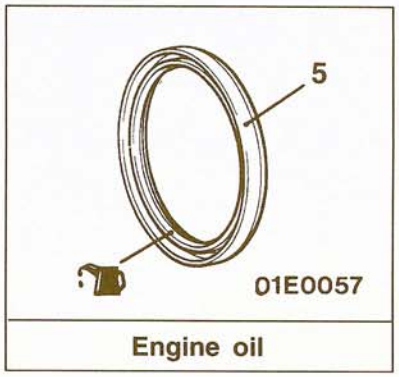


Engine oil

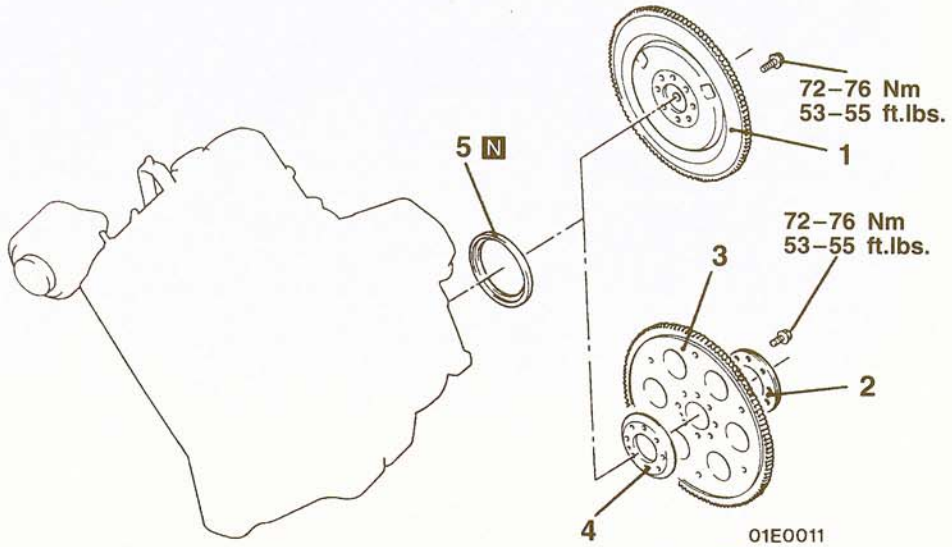


00002766

**Removal steps**

◀A▶ 1. Flywheel assembly <M/T>
◀A▶ 2. Adaptor plate A <A/T>
◀A▶ 3. Drive plate <A/T>
◀A▶ 4. Adaptor plate B <A/T>
◀B▶ ▶A◀ 5. Oil seal

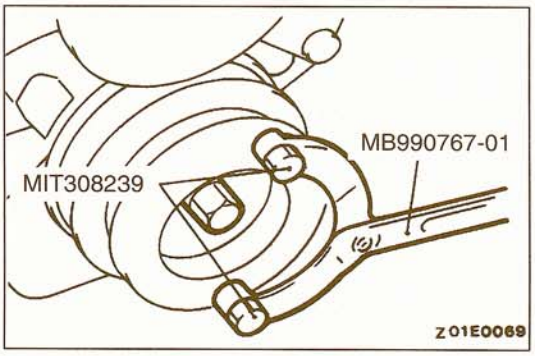


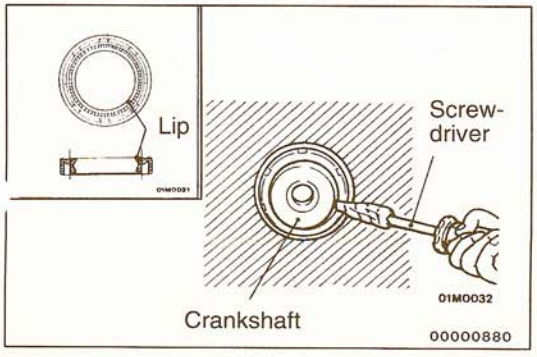


## REMOVAL SERVICE POINTS

### ◀A▶ FLYWHEEL ASSEMBLY <M/T>/ADAPTER PLATE A <A/T>/DRIVE PLATE <A/T>/ADAPTER PLATE B <A/T> REMOVAL

Use the special tool to stop the crankshaft pulley from turning, and then remove the flywheel, adapter plates and the drive plate.

### ◀B▶ OIL SEAL REMOVAL

(1) Cut out a portion in the lip of the crankshaft oil seal.
(2) Cover the tip of a screwdriver with a cloth and apply it to the cutout in the oil seal to pry off the oil seal.

**Caution**
**Take care not to damage the crankshaft and oil seal case.**

TSB Revision

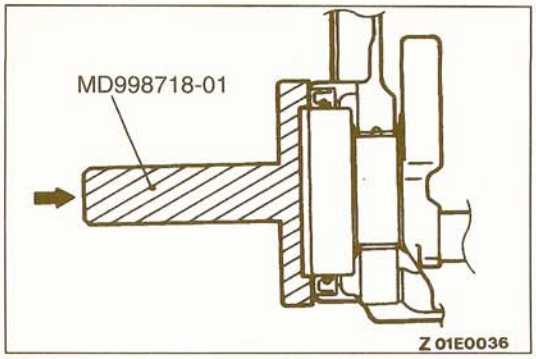


## INSTALLATION SERVICE POINT

### ▶A◀ OIL SEAL INSTALLATION

Use the special tool to press-fit a new crankshaft rear oil seal into the oil seal case.

# OIL PAN AND OIL SCREEN

11200250062

## REMOVAL AND INSTALLATION

**Pre-removal and Post-installation Operation**
Removal and Installation
- Under Skid Plate, Undercover
- Front Exhaust Pipe (Refer to GROUP 15 – Exhaust Pipe, Mufflers and Catalytic Converter.)

Draining and Supplying
- Engine Oil
(Refer to GROUP 00 – Maintenance Service.)

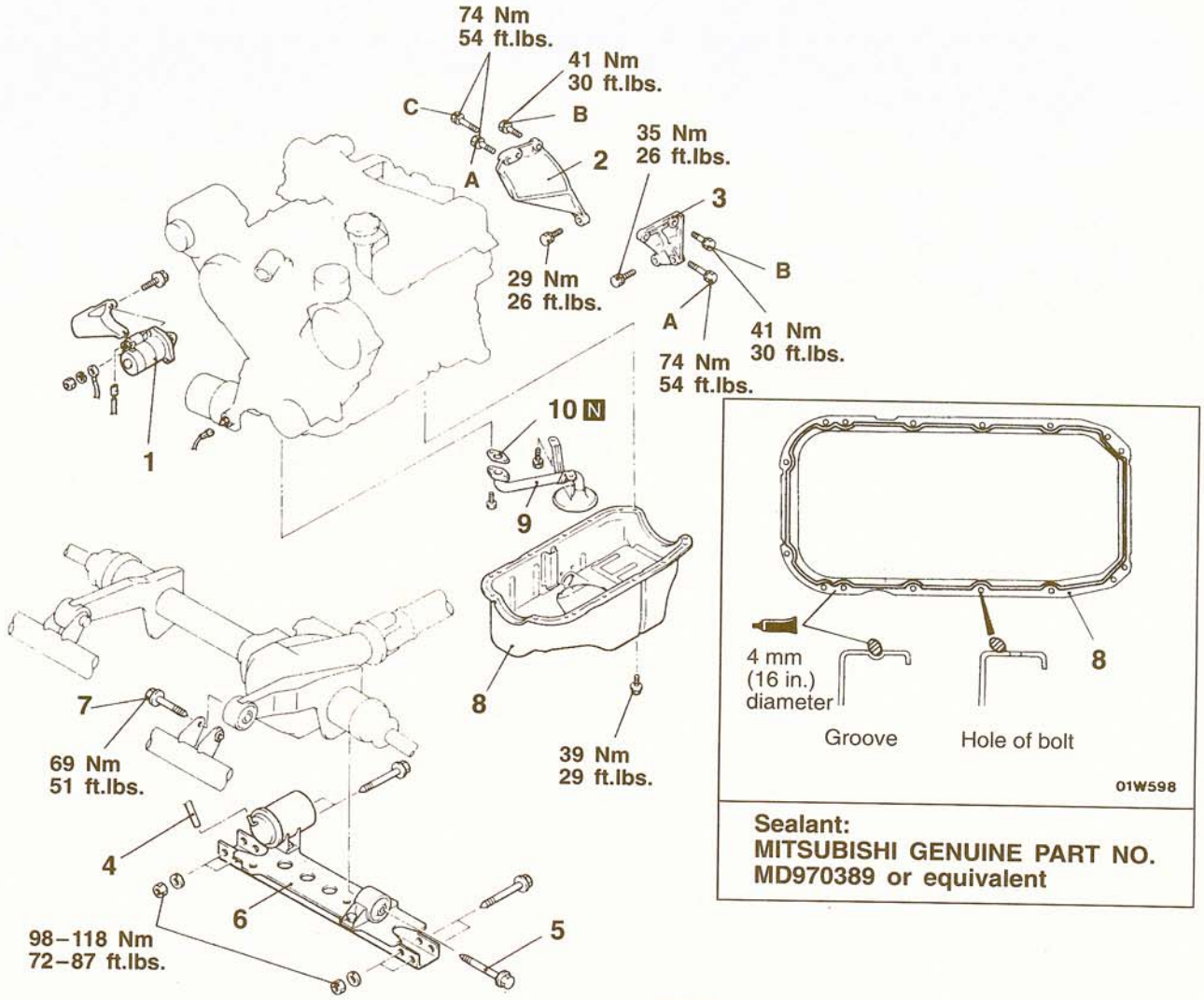


01E0024
00002767

| Symbol | d × L mm (in.) | NOTE |
|---|---|---|
| A | 12 × 35 (.47 × 1.37) | 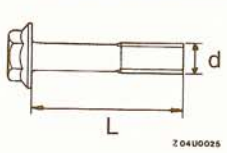 |
| B | 10 × 30 (.39 × 1.18) | |
| C | 12 × 50 (.47 × 1.96) | |



**Removal steps**

1. Starter
2. Transmission stay (R.H.)
3. Transmission stay (L.H.)
4. Vacuum hose
5. Bolt

◀A▶
◀B▶ ▶A◀

6. Front suspension crossmember
7. Bolt
8. Oil pan
9. Oil screen
10. Oil screen gasket

**TSB Revision**

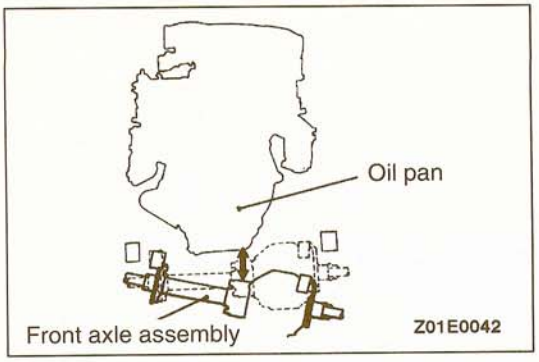


## REMOVAL SERVICE POINTS

### ◀A▶ BOLT REMOVAL

After removing the mounting bolt, lower the front axle assembl as far as possible and so that there is enough space to remove the oil pan.

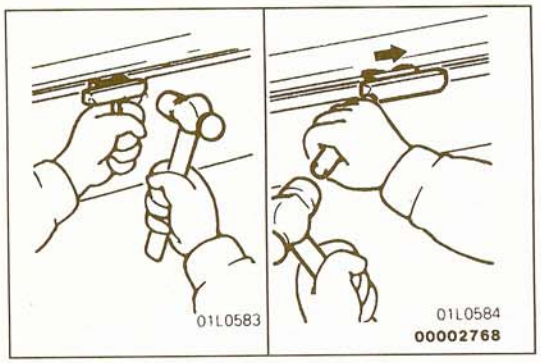


### ◀B▶ OIL PAN REMOVAL

(1) Remove the oil pan bolts.
(2) Tap the general special tool between the oil pan and cylinder block.
(3) Slide the special tool by tapping it at an angle to remove the oil pan.

**Caution**
**Using a screwdriver or chisel in place of the special tool can damage the gasket seat surface and cause oil leakage.**

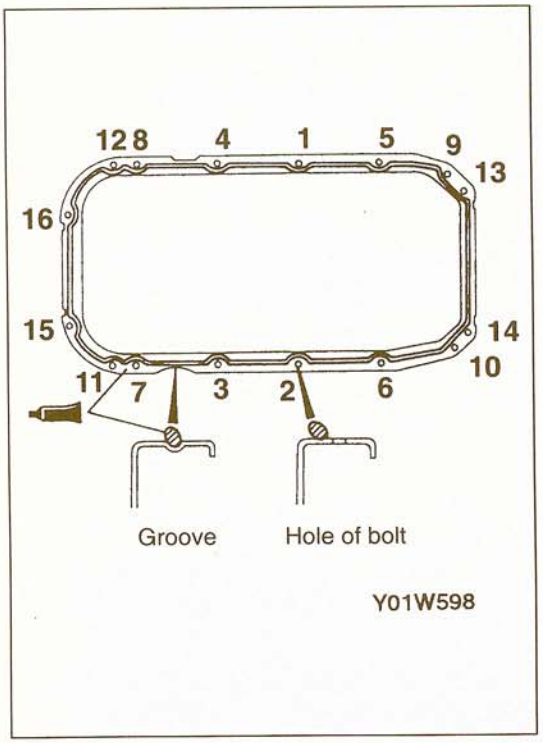


## INSTALLATION SERVICE POINT

### ▶A◀ OIL PAN INSTALLATION

(1) Remove the sealant from the oil pan and cylinder block mating surfaces.
(2) Degrease the sealant-coated surface and the engine mating surface.
(3) Apply specified sealant around the gasket surface of the oil pan as shown in the illustration.

**Specified sealant:**
**MITSUBISHI GENUINE PART No. MD970389 or equivalent**

NOTE
The sealant should be applied in a continuous bead approximately 4 mm (.16 in.) in diameter.

(4) Install the oil pan to the cylinder block within 15 minutes after applying the sealant.

**Caution**
1. **Tighten the oil pan mounting bolt in the order illustrated.**
2. **After installing the oil pan, wait at least 30 minutes before starting the engine.**

## INSPECTION

11200260027

- Check the oil pan for cracks.
- Check the oil pan sealant-coated surface for damage and deformation.
- Check the oil screen for cracked, clogged or damaged wire net and pipe.

**TSB Revision**

# CYLINDER HEAD GASKET

11200400153

## REMOVAL AND INSTALLATION

**Pre-removal Operation**
- Engine Coolant Draining (Refer to GROUP 00 – Maintenance Service.)
- Timing Belt Removal (Refer to P.11A-26.)
- Intake Manifold Removal (Refer to GROUP 15 – Intake Manifold.)
- Under Skid Plate, Undercover Removal
- Front Exhaust Pipe Removal (Refer to GROUP 15 – Exhaust Pipe, Mufflers and Catalytic Converter.)

**Post-installation Operation**
- Front Exhaust Pipe Installation (Refer to GROUP 15 – Exhaust Pipe, Mufflers and Catalytic Converter.)
- Under Skid Plate, Undercover Installation
- Intake Manifold Installation (Refer to GROUP 15 – Intake Manifold.)
- Timing Belt Installation (Refer to P.11A-26.)
- Engine Coolant Supplying (Refer to GROUP 00 – Maintenance Service.)

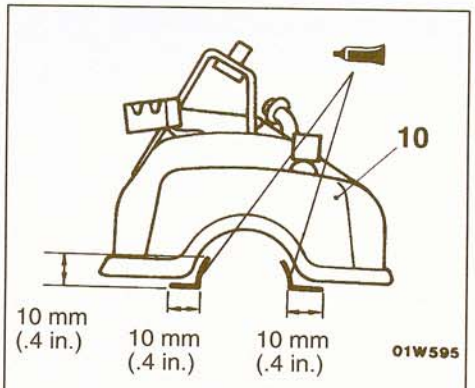


**Sealant:**
**3M ATD Part No. 8660 or equivalent**

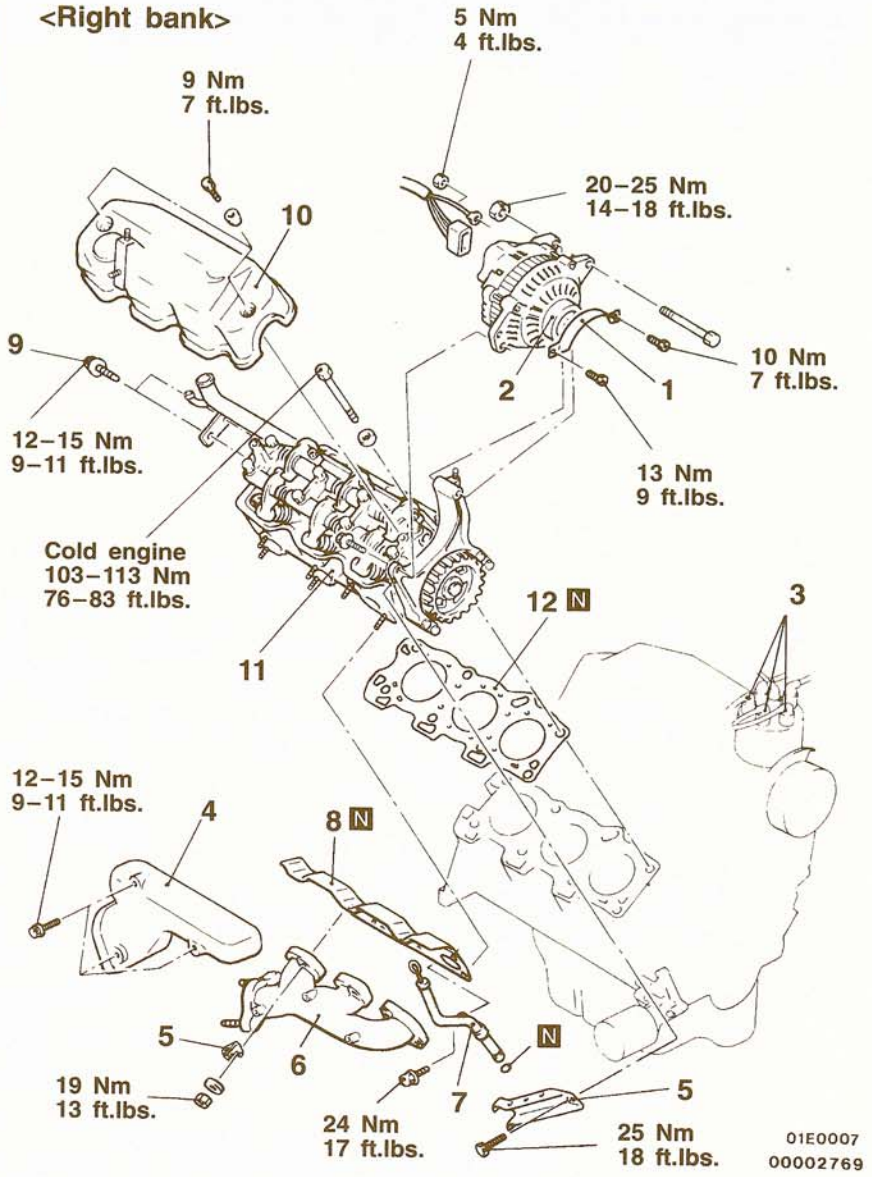


**Removal steps of right bank**

1. Generator pulley cover
2. Generator
3. Spark plug cable connection (No. 1, No. 3 and No. 5)
4. Heat protector
5. Generator stay
6. Exhaust manifold (R.H.)
7. Oil level gage guide
8. Gasket
9. Bolt
10. Rocker cover
- ◀A▶ ▶B◀ 11. Cylinder head assembly
- ▶A◀ 12. Cylinder head gasket

**TSB Revision**

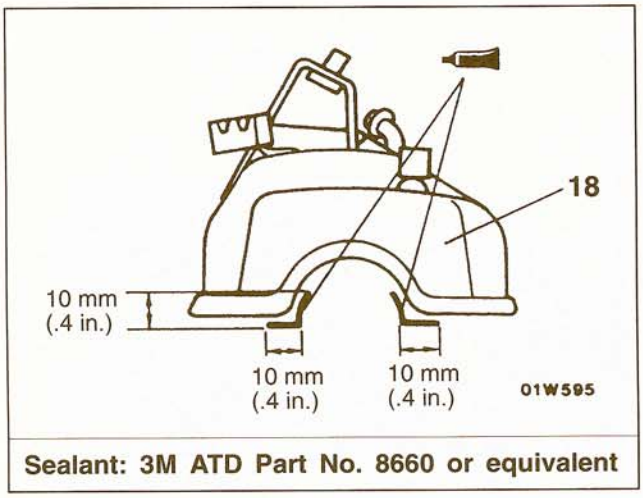


**Sealant: 3M ATD Part No. 8660 or equivalent**

**<Left bank>**

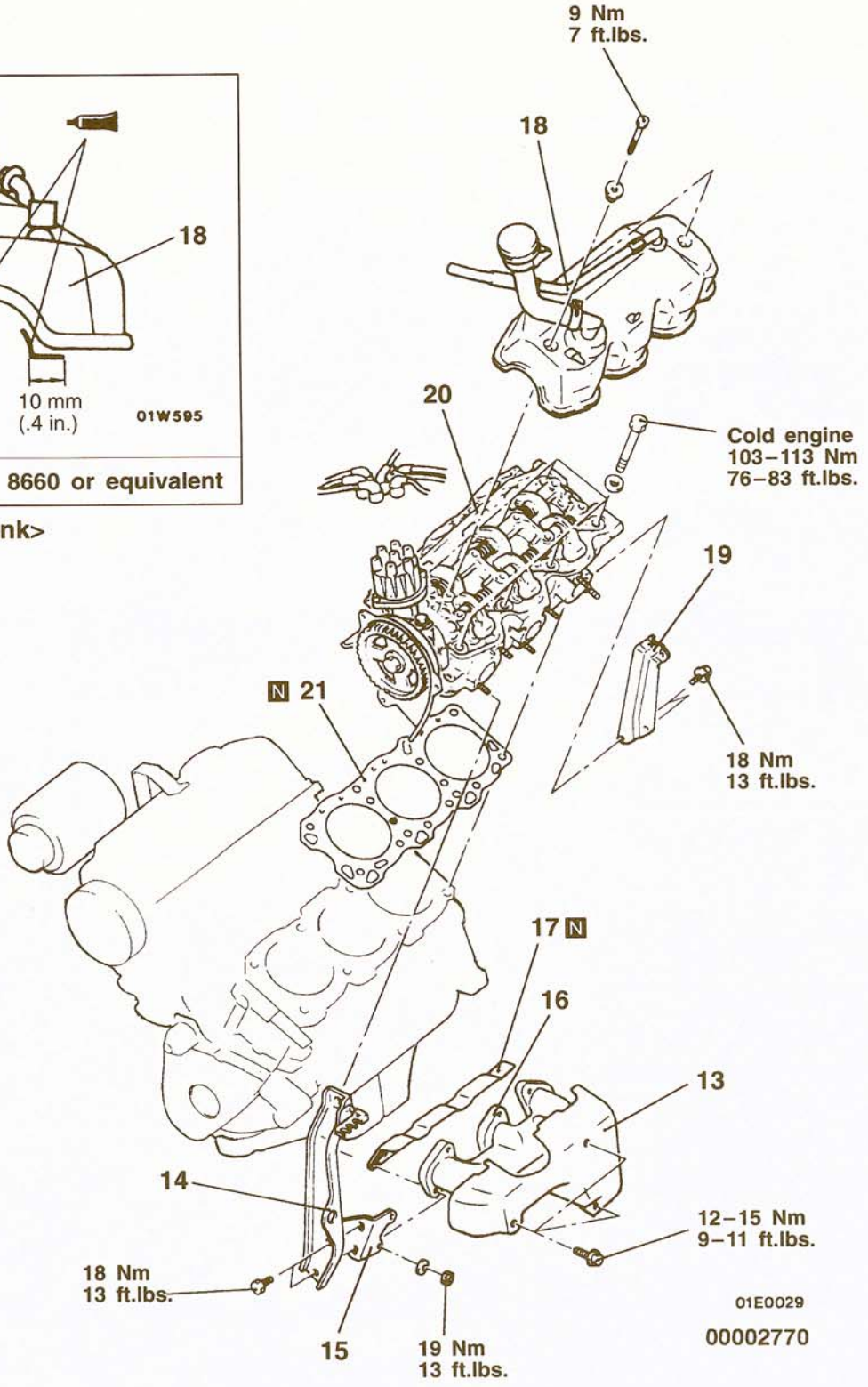


**Removal steps of left bank**

13. Heat protector
14. Intake manifold plenum stay (Front)
15. Bracket
16. Exhaust manifold (L.H.)
17. Gasket
18. Rocker cover
19. Intake manifold plenum stay (Rear)
◀A▶ ▶B◀ 20. Cylinder head assembly
▶A◀ 21. Cylinder head gasket

**TSB Revision**

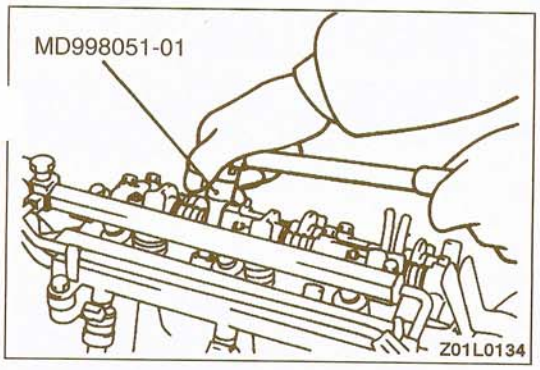


## REMOVAL SERVICE POINTS

### ◀A▶ CYLINDER HEAD ASSEMBLY REMOVAL

Use the special tool to remove the bolts after loosening them in the order shown in the illustration (in 2 or 3 cycles), and then remove the cylinder head assembly.

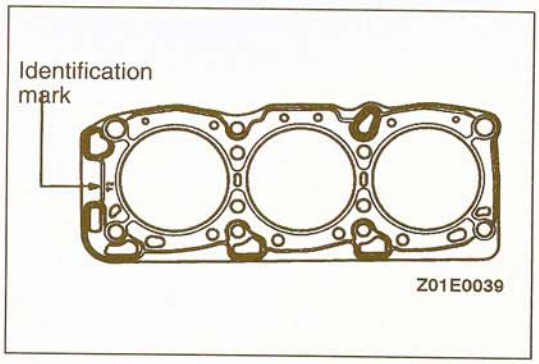


## INSTALLATION SERVICE POINTS

### ▶A◀ CYLINDER HEAD GASKET INSTALLATION

(1) Degrease the mounting surface of the cylinder head gasket.
(2) Lay the cylinder head gasket on cylinder block with the identification mark at front top.

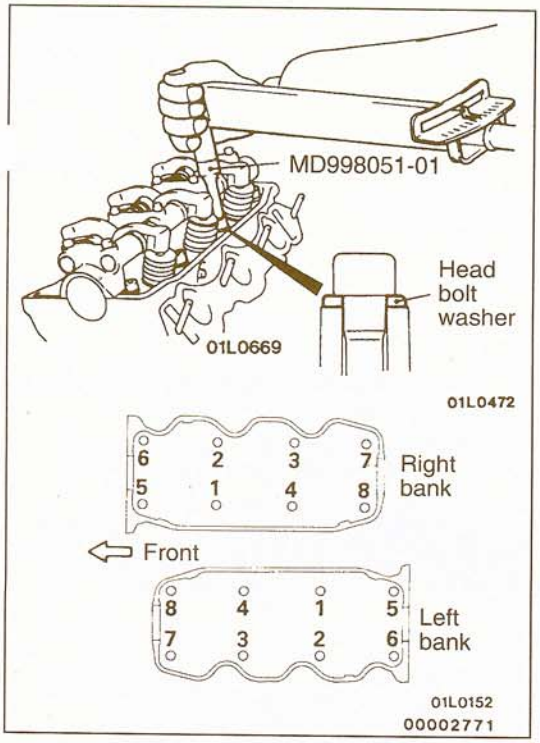


### ▶B◀ CYLINDER HEAD ASSEMBLY INSTALLATION

Use the special tool to tighten the bolts in the order shown in two or three steps.

**Caution**
**Attach the head bolt washer in the direction shown in the illustration.**

# TIMING BELT

11200430152

## REMOVAL AND INSTALLATION

**Pre-removal Operation**
- Engine Coolant Draining
  (Refer to GROUP 00 – Maintenance Service.)

**Post-installation Operation**
- Engine Coolant Filling
  (Refer to GROUP 00 – Maintenance Service.)
- Engine Adjustment

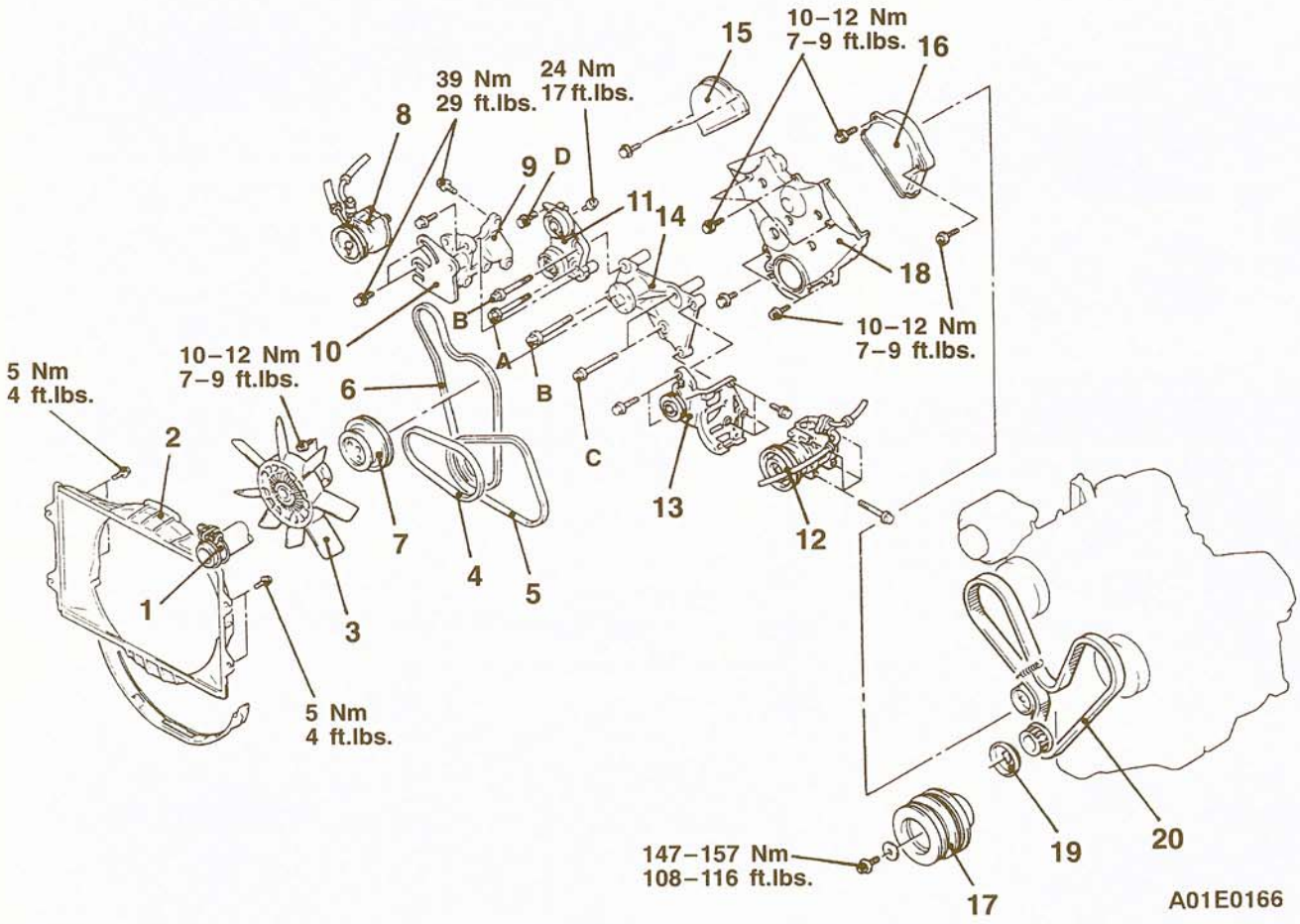


| Symbol | Hardness category | d ×L mm (in.) | Torque Nm (ft.lbs.) | Note |
|---|---|---|---|---|
| A | 7T | 10 × 85 (.39 × 3.34) | 42 (30) | 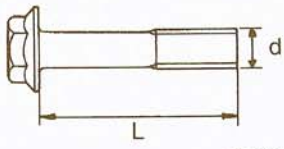 |
| B | | 10 × 95 (.39 × 3.74) | | |
| C | | 12 × 100 (.47 × 3.93) | 75 (54) | |
| D | | 8 × 20 (.31 × .79) | 16 (12) | |



**Removal steps**

1. Radiator upper hose connection
2. Radiator shroud
3. Cooling fan clutch assembly
   - Drive belt tension adjustment
     (Refer to P.11A-5.)
4. Drive belt (Power steering)
5. Drive belt <A/C>
6. Drive belt (Generator, Cooling fan)
7. Cooling fan pulley

◀A▶ 8. Power steering oil pump

9. Oil pump bracket
10. Oil pump mounting bracket

◀B▶ 11. Tension pulley bracket
12. Compressor <A/C>
13. Compressor bracket
14. Cooling fan bracket assembly
15. Timing belt cover outer (A)
16. Timing belt cover outer (B)

◀C▶ ▶B◀ 17. Crankshaft pulley

18. Timing belt cover outer (C)
19. Front flange

◀D▶ ▶A◀ 20. Timing belt

**TSB Revision**

## ADHESIVE POINTS

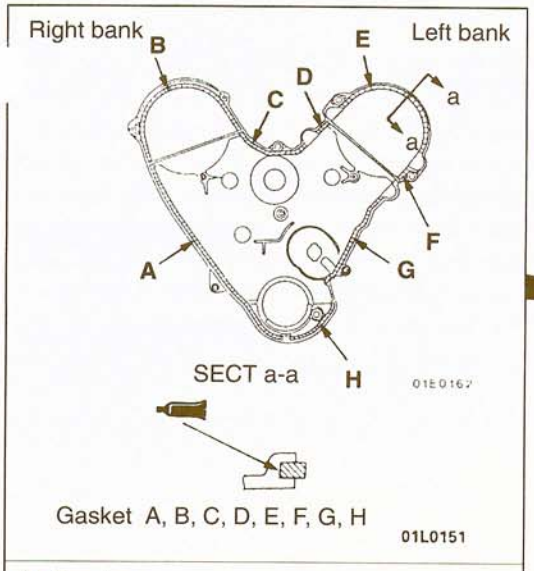


**Adhesive:**
**3M ATD Part No. 8001 or equivalent**

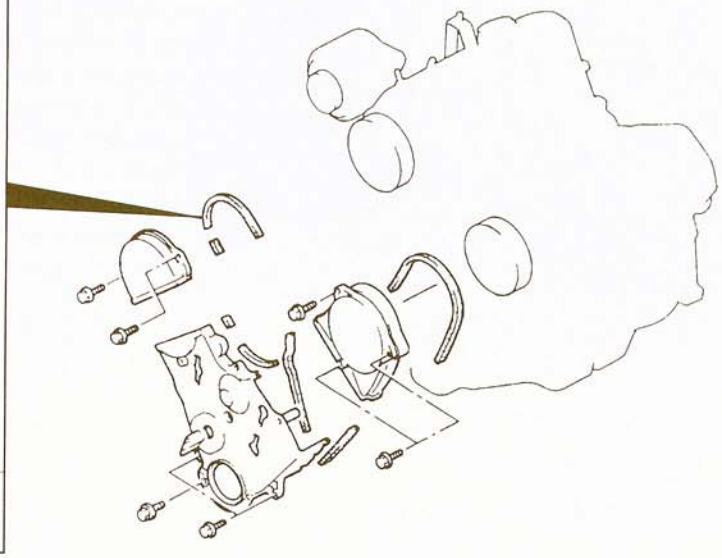

01E0163
00004223

## REMOVAL SERVICE POINTS

### ◀A▶ POWER STEERING OIL PUMP REMOVAL

Remove the power steering oil pump from the bracket, and secure to the body using wire or similar materials.

NOTE
Remove the power steering oil pump with the pressure hose and return hose still attached.

### ◀B▶ COMPRESSOR REMOVAL <AIR CONDITIONING>

Remove the compressor from the bracket, and secure to the body using wire or similar materials.

NOTE
Remove the compressor with the high pressure hose and low pressure hose still attached.

### ◀C▶ CRANKSHAFT PULLEY REMOVAL

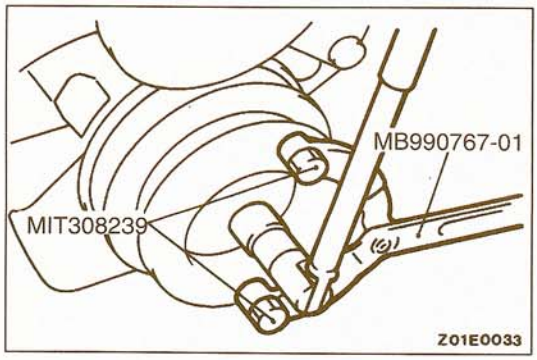


### ◀D▶ TIMING BELT REMOVAL

(1) Loosen the timing belt tensioner bolt and turn the timing belt tensioner counterclockwise along the slot.

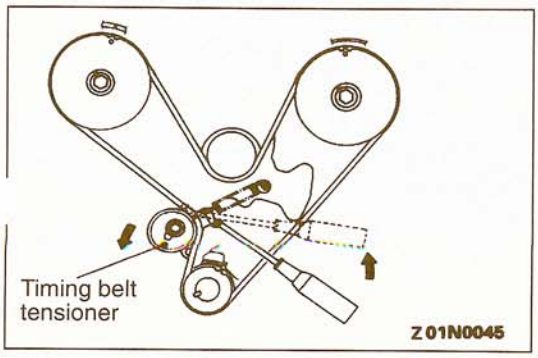

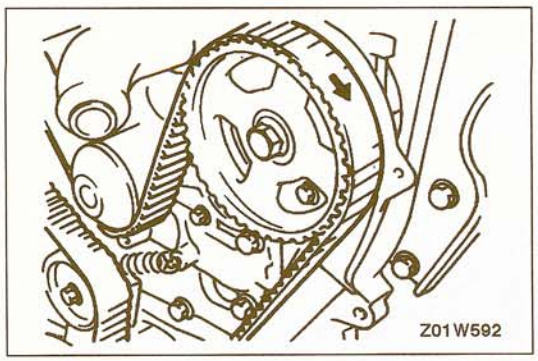


(2) Mark an arrow on the belt to reuse it. When the belt is reinstalled, be sure to make the arrow point in the same direction as before removal.

**Caution**

1. **Do not let water or oil touch the belt, or it will be damaged easily. Keep the timing belt, sprocket, and tensioner stay clean and dry while removed, and never wash them. Parts that have become too dirty should be replaced.**
2. **If any parts are oily, check whether there are any oil leaks in any oil seals or the camshaft oil seal on the front of the engine.**

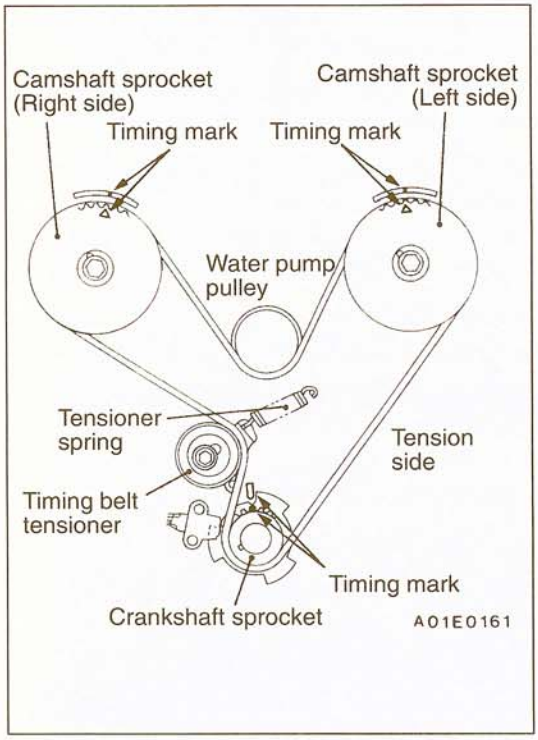


## INSTALLATION SERVICE POINTS

### ▶A◀ TIMING BELT INSTALLATION

(1) Align the timing marks of the camshaft sprockets (on the right and left sides) and the crankshaft sprocket (at the top dead center of the No. 1 cylinder compression stroke).
(2) First, route the timing belt on the crankshaft sprocket, then on the camshaft sprocket on the side without slackness in the tight side.
(3) Next, run the timing belt onto the water pump pulley, the camshaft sprocket on the left side, and the timing belt tensioner.
(4) Apply force counterclockwise to the camshaft sprocket on the right side. If the tight side of the belt is defective, check that the timing marks are all aligned.

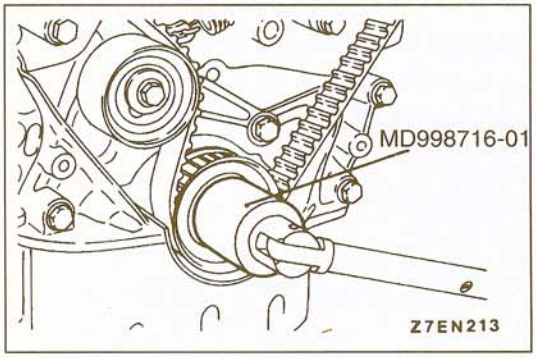


(5) Attach the flange.
(6) Loosen the fixing bolts of the provisionally-tightened tensioner one or two turns and tighten the timing belt with the tensioner spring force.
(7) Use the special tool to turn the crankshaft two turns in the normal rotating direction (clockwise).

NOTE
Turn the crankshaft smoothly, but not in the opposite direction (counterclockwise).

(8) Re-align the sprocket's timing marks and tighten the tensioner fixing bolts.

**TSB Revision**

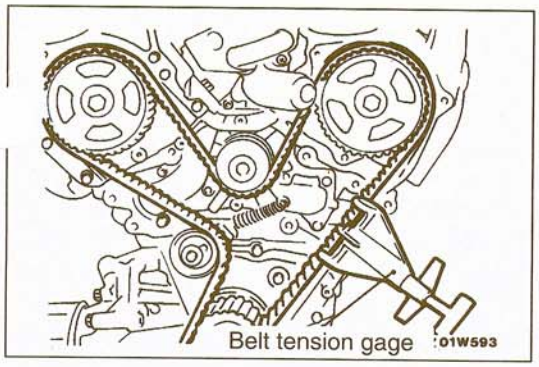


(9) Measure the belt tension with a belt tension gage at the indicated place.

**Standard value: 200–300 N (44.1–66.1 lbs.)**

**Caution**
**Touch the hooks to the tooth bottoms and the spindle to the back of the belt.**

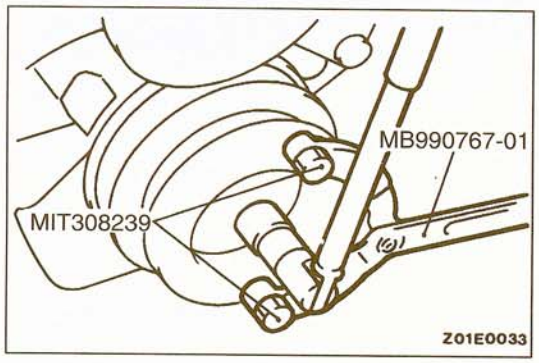


### ▶B◀ CRANKSHAFT PULLEY INSTALLATION

Use the special tool to attach the crankshaft pulley to the crankshaft.

# ENGINE OIL COOLER

12100130049

## REMOVAL AND INSTALLATION

**Pre-removal Operation**
- Radiator Grille Removal

**Post-installation Operation**
- Radiator Grille Installation
- Engine Oil Supplying and Checking

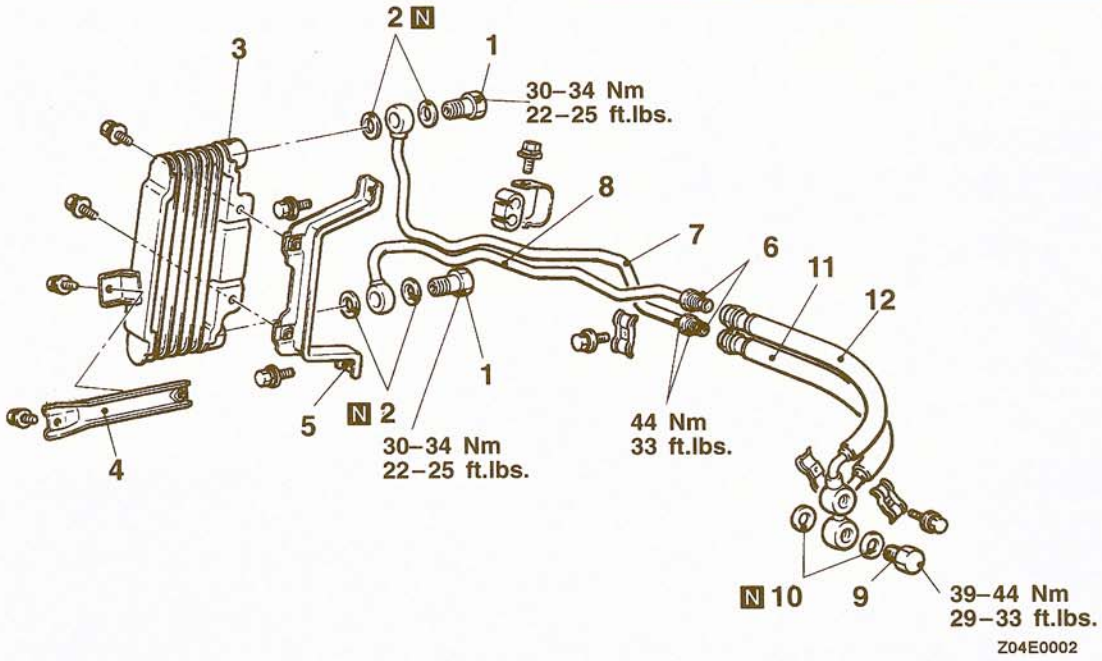


**Removal steps**

◀A▶ 1. Eye bolts
2. Gaskets
3. Engine oil cooler
4. Stay
5. Bracket
6. Engine oil cooler pipe connection
7. Return pipe
8. Feed pipe
▶A◀ 9. Eye bolts
10. Gaskets
▶A◀ 11. Return hose
▶A◀ 12. Feed hose

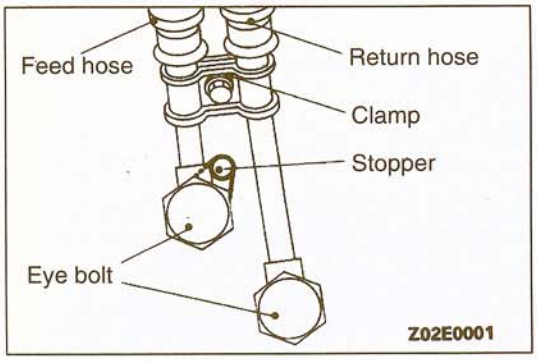


## REMOVAL SERVICE POINT

### ◀A▶ EYE BOLTS REMOVAL

**Caution**
**Be sure to hold the weld nut of the oil cooler while loosening the eye bolt.**

## INSTALLATION SERVICE POINT

### ▶A◀ FEED HOSE/RETURN HOSE/EYE BOLTS (ENGINE SIDE) INSTALLATION

(1) Provisionally tighten the eye bolts, and install the clamp so that it touches the crimps on the hoses.
(2) Fully tighten the eye bolt on the return hose.
(3) Place the feed hose against the stopper, and fully tighten the eye bolt on the feed hose.

## INSPECTION

12100140042

- Check for foreign material between the oil cooler fins.
- Check the oil cooler fins for bends or damage.
- Check the oil cooler pipes for cracks, damage, clogging or deterioration.

**TSB Revision**

# ENGINE <3.0L-SOHC-24 VALVE>

11100020035

## GENERAL SPECIFICATIONS

| Items | | | Specifications |
|---|---|---|---|
| Type | | | V-type, Over Head Camshaft |
| Number of cylinders | | | 6 |
| Bore mm (in.) | | | 91.1 (3.587) |
| Stroke mm (in.) | | | 76.0 (2.992) |
| Piston displacement $cm^3$ (cu.in.) | | | 2,972 (181.4) |
| Compression ratio | | | 9.0 |
| Firing order | | | 1-2-3-4-5-6 |
| Valve timing | Intake valve | Opens (BTDC) | 45° |
| | | Closes (ABDC) | 49° |
| | Exhaust valve | Opens (BBDC) | 15° |
| | | Closes (ATDC) | 34° |
| Valve overlap | | | 19° |
| Intake valve duration | | | 244° |
| Exhaust valve duration | | | 244° |

## SERVICE SPECIFICATIONS

11100030175

| Items | | | | Standard value | Limit |
|---|---|---|---|---|---|
| Drive belt tension N (lbs.) | Generator V-ribbed type | When checked | | 392–588 (87–130) | – |
| | | When new belt is installed | | 637–833 (141–184) | – |
| | | When used belt is installed | | 441–539 (98–119) | – |
| | Power steering pump | When checked | | 294–490 (66–110) | – |
| | | When new belt is installed | | 490–686 (110–154) | – |
| | | When used belt is installed | | 343–441 (77–99) | – |
| Drive belt deflection <Reference value> mm (in.) | Generator V-ribbed type | When checked | A | 5.0–7.0 (.20–.28) | – |
| | | | B | 8.5–10.5 (.33–.41) | – |
| | | When new belt is installed | A | 4.0–5.0 (.16–.20) | – |
| | | | B | 5.5–7.5 (.22–.30) | – |
| | | When used belt is installed | A | 5.5–6.5 (.22–.26) | – |
| | | | B | 8.0–9.0 (.31–.35) | – |
| | Power steering pump | When checked | | 10.5–14.5 (.41–.57) | – |
| | | When new belt is installed | | 9.5–11.5 (.37–.45) | – |
| | | When used belt is installed | | 11.5–13.5 (.45–.53) | – |
| | A/C compressor | When checked | | 6.5–7.5 (.26–.30) | – |
| | | When new belt is installed | | 5.0–6.0 (.20–.24) | – |
| | | When used belt is installed | | 6.5–7.5 (.26–.30) | – |
| Basic ignition timing at idle | | | | 5° BTDC ± 3° | – |
| Actual ignition timing at curb idle | | | | Approx. 15° BTDC | – |
| CO contents % | | | | 0.5 or less | – |
| HC contents ppm | | | | 100 or less | – |
| Curb idle speed r/min | | | | 700±100 | – |

**TSB Revision**

| Items | | Standard value | Limit |
|---|---|---|---|
| Compression pressure (250–400 r/min) kPa (psi) | | 1,200 (171) | min. 890 (127) |
| Compression pressure difference of all cylinder kPa (psi) | | – | max. 100 (14) |
| Intake manifold vacuum at curb idle kPa (in.Hg) | | – | min. 60 (18) |
| Timing belt | Amount of projection of auto tensioner rod mm (in.) (Distance between the tensioner arm and auto tensioner body) | 3.8–4.5 (.149–.177) | – |

## SEALANT

11100050164

| Items | Recommended sealant |
|---|---|
| Oil pan | MITSUBISHI GENUINE Part No. MD970389 or equivalent |

## SPECIAL TOOLS

11100060167

| Tool | Tool number and name | Supersession | Application |
|---|---|---|---|
| 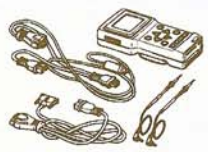 | MB991502<br>Scan tool (MUT-II) | – | Checking of engine idling speed |
|  | ROM pack | – | |
| 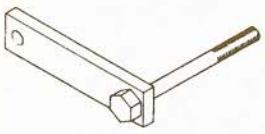 | MD998781<br>Flywheel stopper | – | Flywheel <M/T> or drive plate <A/T> supporting |
|  | MD998718<br>Crankshaft rear oil seal installer | MD998718-01 | Installation of the crankshaft rear oil seal |
| 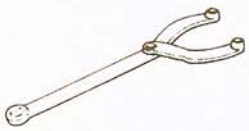 | MB990767<br>End yoke holder | MB990767-01 | Supporting the sprocket and shaft pulley during removal and installation<br>Use with MD998715 |
| 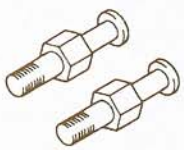 | MD998715<br>Pulley holding pins | – | Supporting the crankshaft pulley when crankshaft bolt and pulley are removed or reinstalled.<br>Use together with MB990767 Camshaft pulley supporting |

**TSB Revision**

| Tool | Tool number and name | Supersession | Application |
|---|---|---|---|
|  | MD998769<br>Crankshaft sprocket spacer | – | Used if the crankshaft needs to be rotated to attach the timing belt, etc. |
|  | MD998051<br>Wrench, cylinder head bolt | MD998051-01 | Loosening and tightening of cylinder head bolt |
| 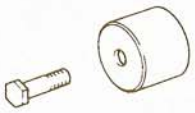 | MD998713<br>Camshaft oil seal installer | MD998713-01 | Camshaft oil seal installation |
|  | MB991559<br>Camshaft oil seal installer | – | Press fitting the camshaft oil seal (For left bank) |
| 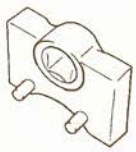 | MD998767<br>Tension pulley socket wrench | – | Adjustment of the timing belt |
| 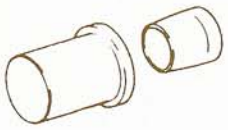 | MD998717<br>Crankshaft front oil seal installer | – | Press-fitting of crankshaft front oil seal |

# TROUBLESHOOTING

11100070115

| Trouble Symptom | Probable Cause | Remedy |
|---|---|---|
| Compression is too low | Blown cylinder head gasket | Replace the gasket. |
| | Worn or damaged piston rings | Replace the rings. |
| | Worn piston or cylinder | Repair or replace the piston and/or the cylinder block. |
| | Worn or damaged valve seat | Repair or replace the valve and/or the seat ring |
| Drop in oil pressure | Engine oil level is too low | Check the engine oil level. |
| | Malfunction of oil pressure switch | Replace the oil pressure switch. |
| | Clogged oil filter | Install a new filter. |
| | Worn oil pump gears or cover | Replace the gears and/or the cover. |
| | Thin or diluted engine oil | Change the engine oil to the correct viscosity. |
| | Stuck (open) oil relief valve | Repair the relief valve. |
| | Excessive bearing clearance | Replace the bearings. |

**TSB Revision**

| Trouble Symptom | Probable Cause | Remedy |
|---|---|---|
| Oil pressure too high | Stuck (closed) oil relief valve | Repair the relief valve. |
| Noisy valves | Malfunction of lash adjuster | Replace the lash adjuster. |
| | Thin or diluted engine oil (low oil pressure) | Change the engine oil. |
| | Worn or damaged valve stem or valve guide | Replace the valve and/or the guide. |
| Connecting rod noise/main bearing noise | Insufficient oil supply | Check the engine oil level. |
| | Thin or diluted engine oil | Change the engine oil. |
| | Excessive bearing clearance | Replace the bearings. |

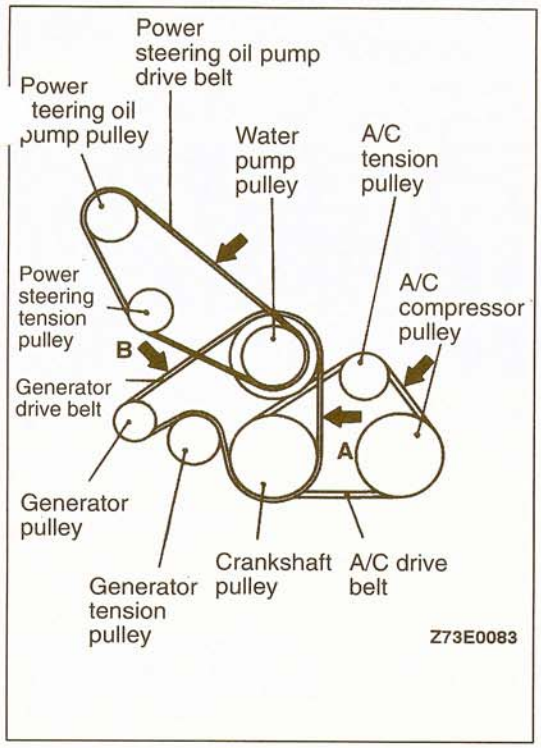


# ON-VEHICLE SERVICE

11100310033

## DRIVE BELT TENSION CHECK AND ADJUSTMENT

Check the belt tension by using a belt-tension gage or apply 98 N (22 lbs.) of force to the belt midway between the pulleys as shown in the illustration, and measure the deflection.

**Standard value:**

| Item | | Check value | Adjustment value new belt | Adjustment value used belt |
|---|---|---|---|---|
| For generator | Tension N (lbs.) | 392–588 (87–130) | 637–833 (141–184) | 441–539 (98–119) |
| | Deflection <Reference value> mm (in.) | A: 5.0–7.0 (.20–.28) | A: 4.0–5.0 (.16–.20) | A: 5.5–6.5 (.22–.26) |
| | | B: 8.5–10.5 (.33–.41) | B: 5.5–7.5 (.22–.30) | B: 8.0–9.0 (.31–.35) |
| For power steering | Tension N (lbs.) | 294–490 (66–110) | 490–686 (110–154) | 343–441 (77–99) |
| | Deflection <Reference value> mm (in.) | 10.5–14.5 (.41–.57) | 9.5–11.5 (.37–.45) | 11.5–13.5 (.45–.53) |
| For A/C | Deflection mm (in.) | 6.5–7.5 (.26–.30) | 5.0–6.0 (.20–.24) | 6.5–7.5 (.26–.30) |

A: Measure between the water pump pulley and the crankshaft pulley.
B: Measure between the water pump pulley and the generator.

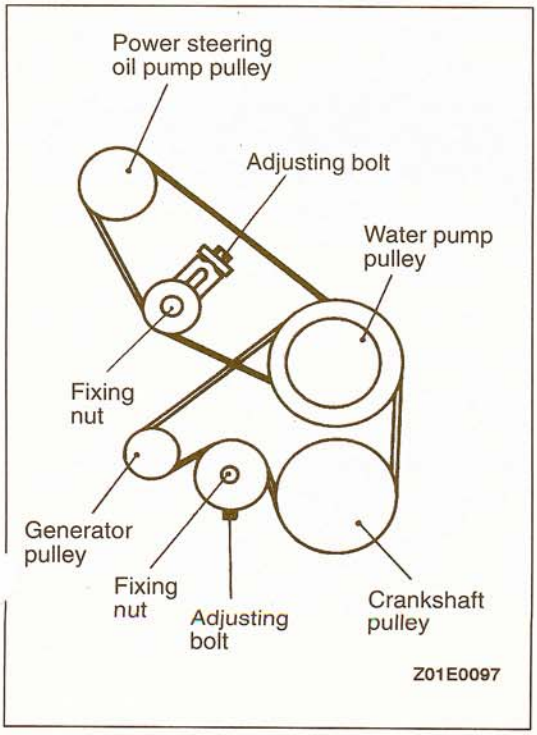


## GENERATOR DRIVE BELT AND POWER STEERING OIL PUMP DRIVE BELT TENSION ADJUSTMENT

(1) Loosen the tension pulley fixing nut.
(2) Adjust the belt tension using the adjusting bolt.
(3) Tighten the fixing nut.
(4) Crank the engine once or more.
(5) Check the belt tension.

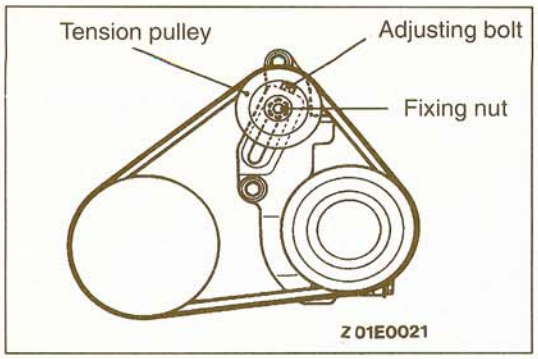


### AIR CONDITIONING COMPRESSOR DRIVE BELT TENSION ADJUSTMENT

(1) Loosen the tension pulley fixing nut.
(2) Adjust the belt tension using the adjusting bolt.
(3) Tighten the fixing nut.
(4) Crank the engine once or more.
(5) Check the belt tension.

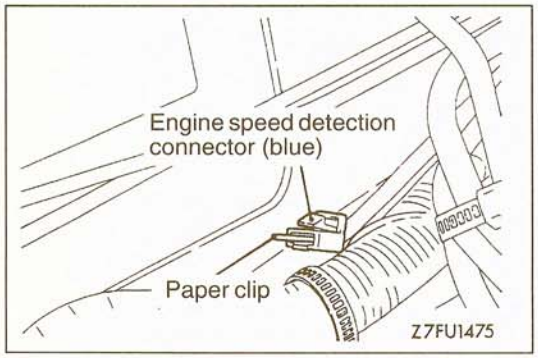


## IGNITION TIMING CHECK

11100170068

(1) Before inspection, set the vehicle to the following condition.
- Engine coolant temperature: 80–95°C (176–203°F)
- Lights and all accessories: OFF
- Transmission: Neutral (P for A/T)

(2) Insert a paper clip into the engine speed detection connector (blue), and then connect a tachometer to the paper clip.

NOTE
Do not use the scan tool. If the scan tool is connected to the data link connector, the ignition timing will be unchanged instead of reverting to the basic ignition timing.

(3) Set the timing light.
(4) Start the engine and run it at idle.
(5) Check the curb idle speed.

**Standard value: 700±100 r/min**

NOTE
The reading on the tachometer indicates one-third of the actual engine speed. In other words, the actual engine speed is three times the indication on the tachometer.

(6) Turn the ignition switch to OFF.
(7) Disconnect the waterproof female connector from the ignition timing adjustment connector (brown).
(8) Use a jumper wire to ground the ignition timing adjustment terminal.

NOTE
Grounding this terminal sets the engine to the basic ignition timing.

(9) Start the engine and run it at idle.
(10) Check the basic ignition timing.

**Standard value: 5°BTDC±3°**

(11) If the ignition timing is not within the standard value range, refer to GROUP 13A – On-vehicle Inspection of MFI Components and check the crankshaft position sensor.
(12) Disconnect the jumper wire connected at step (8).
(13) Check that the idling ignition timing is at the correct value.

**Standard value: Approx. 15°BTDC**

NOTE
(1) Ignition timing is variable within about±7°, even under normal operating conditions.
(2) And it is automatically further advanced by about 5° from 15°BTDC at higher altitudes.

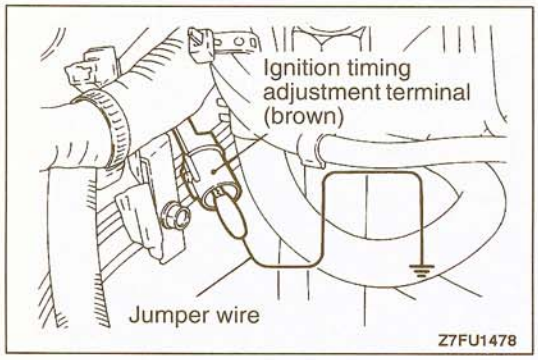

## CURB IDLE SPEED CHECK

11100190163

(1) Before inspection, set the vehicle to the following condition.
- Engine coolant temperature: 80–95°C (176–203°F)
- Lights and all accessories: OFF
- Transmission: Neutral (P for A/T)

(2) Check the basic ignition timing.

**Standard value: 5° BTDC±3°**

(3) After turning the ignition switch to OFF, connect a tachometer or the scan tool to the data link connector (white).

NOTE
For the procedures for setting the tachometer, refer to P.11A-36.

(4) Start the engine and run it at idle.
(5) Run the engine at idle for 2 minutes.
(6) Check the curb idle speed.

**Standard value: 700±100 r/min**

NOTE
The idle speed is adjusted automatically by the idle air control (IAC) system.

(7) If there is a deviation from the standard value refer to GROUP 13A – Check Chart Classified by Trouble Symptoms, and check the MFI components.

## IDLE MIXTURE CHECK

11100210135

(1) Before inspection, set the vehicle to the following condition.
- Engine coolant temperature: 80–95°C (176–203°F)
- Lights and all accessories: OFF
- Transmission: Neutral (P for A/T)

(2) Check to be sure that the basic ignition timing is at the standard value.

**Standard value: 5° BTDC±3°**

(3) After turning the ignition switch to OFF, connect a tachometer, or connect the scan tool to the data link connector.

NOTE
For the procedures for setting the tachometer, refer to P.11A-36.

(4) Start the engine and race it at an engine speed of 2,500 r/min for two minutes.
(5) Connect a CO and HC tester.
(6) Check the CO contents and the HC contents while the engine is idling.

**Standard value:**
**CO contents: 0.5% or less**
**HC contents: 100 ppm or less**

(7) If the concentrations are outside the standard values, check the following items.
- Diagnostic output
- Closed loop control
  (If closed loop control is being carried out normally, the heated oxygen sensor output signal will vary between 0–400 mV and 600–1,000 mV while the engine is idling.)
- Fuel pressure
- Injectors
- Ignition coil, spark plug cables, spark plugs
- Evaporative emission control system
- Compression pressure

NOTE
If the results of the checks for all items are normal but the CO and HC concentrations still exceed the standard values, replace the three-way catalyst.

## DASHPOT CHECK AND ADJUSTMENT <for California>

11100240011

(1) Inspect the idle speed before inspection and adjustment of the dashpot.
(2) Set the vehicle in the following conditions before dashpot inspection and adjustment.
- Engine coolant temperature: 80–95°C
- Lights, electrical cooling fan and accessories: OFF
- Transaxle: Neutral (P for A/T)

(3) Set the tachometer or connect the scan tool to the data link connector (white).

NOTE
For the procedures for setting the tachometer, refer to P.11A-36.

(4) Start the engine.

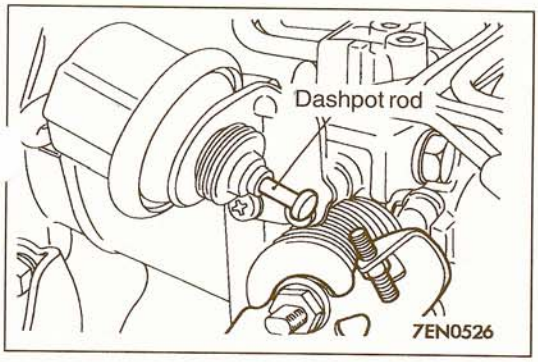


(5) Open the throttle valve until the dashpot rod makes a full stroke.
(6) Close the throttle valve slowly to find a point where the throttle lever contacts the dashpot rod (a point where the dashpot starts to contract). Hold the throttle valve at this point.
(7) Check the engine speed (at which the dashpot starts to operate).

**Standard value: 2,200±200 r/min**

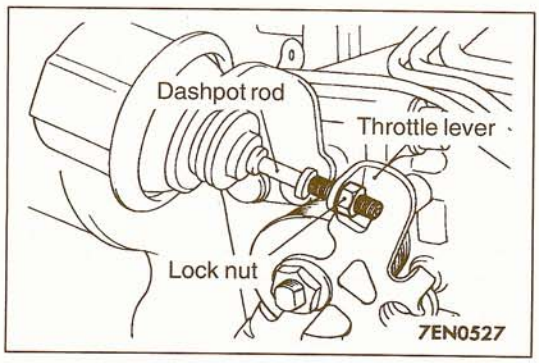


(8) If the engine speed is not within the specified limit, loosen the lock nut on the rod and turn the rod to make adjustment for proper dashpot starting engine speed.
(9) Release the throttle valve to make sure that the engine speed slowly drops to the idle speed.

## COMPRESSION PRESSURE CHECK 11100260161

(1) Before inspection, check that the engine oil, starter and battery are normal. Also, set the vehicle to the followir condition.
- Engine coolant temperature: 80–95°C (176–203°F)
- Lights and all accessories: OFF
- Transmission: Neutral (P for A/T)

(2) Disconnect the spark plug cables.
(3) Remove all of the spark plugs.
(4) Disconnect the crankshaft position sensor connector.

NOTE
Doing this will prevent the engine control module from carrying out ignition and fuel injection.

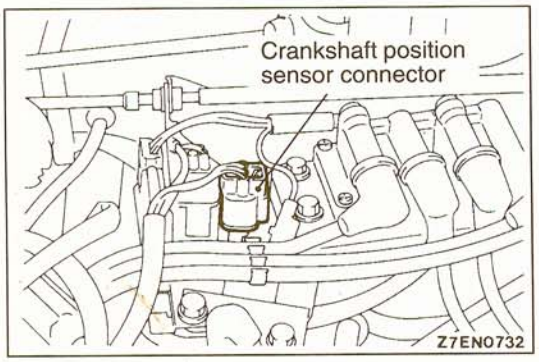


(5) Cover the spark plug hole with a rag, and after the engine has been cranked, check that no foreign material is adhering to the rag.

**Caution**
1. **Keep away from the spark plug hole when cranking.**
2. **Do not let water, oil, fuel, etc. enter the cylinder through cracks, or these heated materials will gush out from the spark plug hole, which is dangerous.**

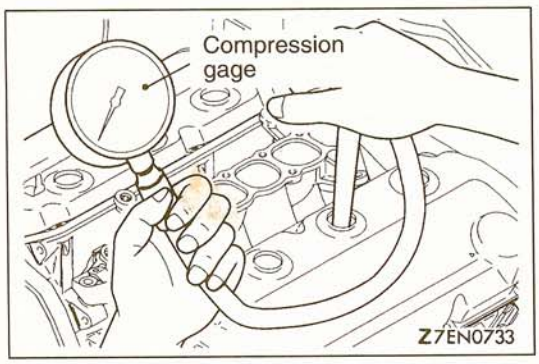


(6) Set the compression gage to a spark plug mounting hole.
(7) Crank the engine with the throttle valve fully open and measure the compression pressure.

**Standard value: 1200 kPa (171 psi.)/250–400 r/mir**

**Limit: min. 890 kPa (127 psi.)/250–400 r/min**

(8) Measure the compression of all the cylinders, and check that the pressure differences of the cylinders are below the limit.

**Limit: max. 100 kPa (14 psi.)**

(9) If there is a cylinder with compression or a compression difference that is outside the limit, pour a small amount of engine oil through the spark plug hole, and repeat the operations in steps (6) to (8).
   1) If the compression increases after oil is added, the cause of the malfunction is a worn or damaged piston ring and/or cylinder inner surface.
   2) If the compression does not rise after oil is added, the cause is a burnt or defective valve seat, or pressure leaking from the gasket.

(10) Reconnect the crankshaft position sensor connector.
(11) Reinstall the spark plugs and spark plug cables.
(12) Use the scan tool to erase the diagnostic trouble codes, or disconnect the negative battery cable for 10 seconds or more and then re-connect it.

NOTE
This will erase the diagnostic trouble code resulting from the distributor connector being disconnected.

## MANIFOLD VACUUM CHECK

11100270164

(1) Before inspection, set the vehicle to the following condition.
- Engine coolant temperature: 80–95°C (176–203°F)
- Lights and all accessories: OFF
- Transmission: Neutral (P for A/T)

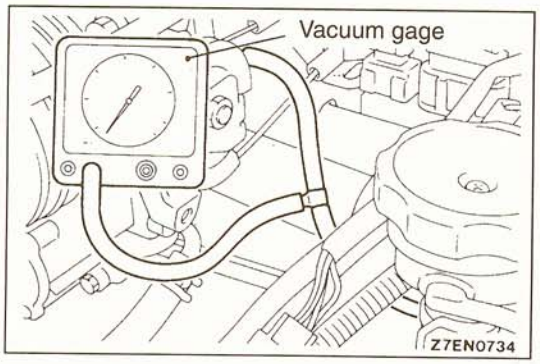


(2) Connect a tachometer or connect the scan tool to the data link connector.

NOTE
For the procedures for setting the tachometer, refer to P.11A-36.

(3) Connect a three-way joint to the vacuum hose between the intake manifold plenum and the fuel-pressure regulator, and then connect a vacuum gage.
(4) Start the engine and check that the idle speed is within the standard value range.
Take a reading of the vacuum gage.

**Limit: min. 60 kPa (18 in.Hg)**

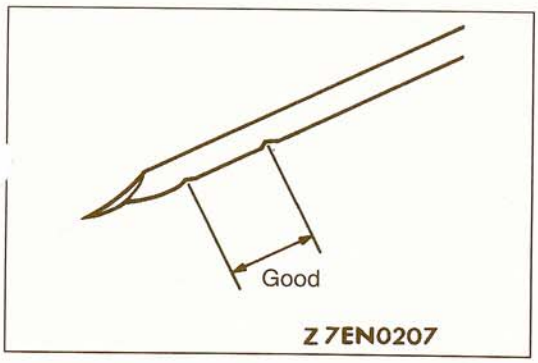


## LASH ADJUSTER CHECK

11100290153

NOTE
Directly after starting the engine or while the engine is running, if an abnormal sound (knocking) that seems to be coming from the lash adjuster is heard and doesn't stop, carry out the following inspection.

(1) Check the engine oil and replenish or replace the oil if necessary.

NOTE
- If there is a small amount of oil, air is sucked in through the oil strainer and gets into the oil passage.
- If the amount of oil is greater than normal, oil is mixed by the crank, and a large amount of air is mixed into the oil.
- Air and oil will not separate easily in oil that has degenerated, and the amount of air mixed into the oil will increase.

If the air mixed into the oil due to the above reasons gets into the high pressure chamber of the lash adjuster, the air inside the high pressure chamber will be compressed when the valve is open and the lash adjuster will over-compress, resulting in an abnormal noise when the valve closes. This is the same effect as if the valve clearance is adjusted by mistake to be too large.
Here, if the air inside the lash adjuster is released, then the operation has returned to normal.

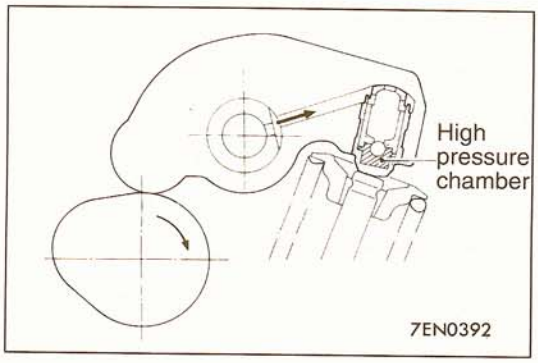

(2) Start the engine and gently race * the engine several times (10 times or less).
If the abnormal noise is stopped by the racing, air has been released from the high pressure chamber, and the functioning of the lash adjuster has returned to normal.
* After gradually increasing the engine speed from idle speed to 3000 r/min (over 30 seconds), gradually reduce the engine speed back to idle speed (over 30 seconds).

NOTE
- Parking on a slope for a long period will decrease the amount of oil inside the lash adjuster, and then air may get into the high pressure chamber when starting the engine.
- After parking the vehicle for long periods, the oil drains out of the oil passage, and it takes time for the oil to be supplied to the lash adjuster, so air can get into the high pressure chamber.

(3) If the abnormal noise is not stopped by the racing, check the lash adjuster by the following procedure.
1) Stop the engine.
2) Set the engine No. 1 cylinder to the compression top dead center position.
3) Push the rocker arm in the locations indicated by the white arrow mark as shown in the illustration at left to check if the rocker arm moves down or not.
4) Slowly turn the crankshaft 360° clockwise.
5) Check the rocker arm in the locations indicated by the black arrow mark as shown in the illustration at left using the same procedure as in step 3).

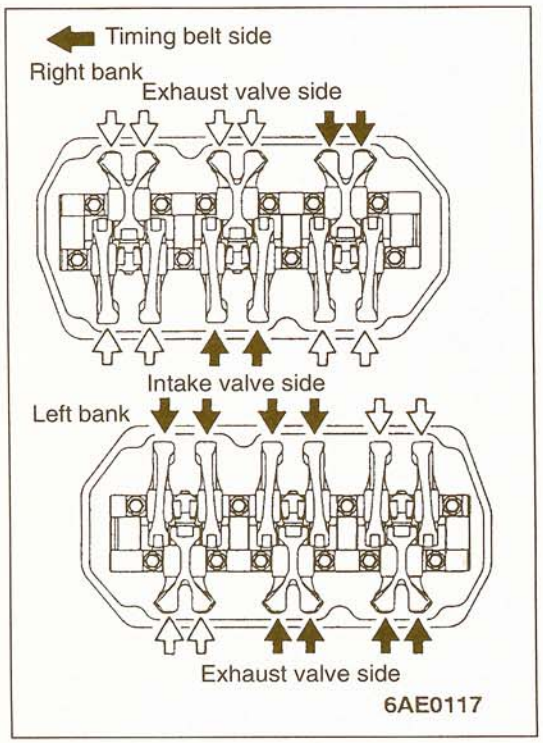


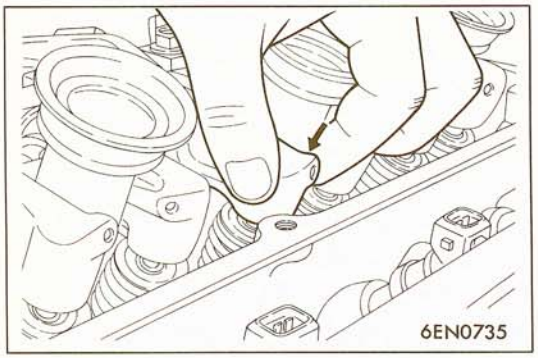


6) If the rocker arm can be lowered easily when the part of the rocker arm which is directly above the top of the lash adjuster is pressed, the lash adjuster is defective and should be replaced with a new part. Furthermore, when replacing the lash adjuster, bleed all of the air from the lash adjuster and then install. After this, check that there is no abnormality by carrying out the inspection in steps 1) to 5).

NOTE
- A leak-down test can be carried out to accurately determine whether the lash adjuster is defective or not.
- For the procedures for the leak-down test and air bleeding of the lash adjuster, refer to the Engine Service Manual.

Furthermore, if the rocker arm feels extremely stiff and cannot be lowered when it is pressed, the lash adjuster is normal, so investigate for another cause of the abnormality.

**TSB Revision**

# ENGINE ASSEMBLY

11200100169

## REMOVAL AND INSTALLATION

**Pre-removal Operation**
- Hood Removal (Refer to GROUP 42 – Hood.)
- Battery and Battery Tray Removal
- Cruise Control Intermediate Link Removal (Refer to GROUP 17 – Cruise Control.)
- Radiator Removal (Refer to GROUP 14 – Radiator.)
- Under Skid Plate, Undercover Removal
- Front Exhaust Pipe <FEDERAL> (Refer to GROUP 15 – Exhaust Pipe, Muffler and Catalytic Converter.)
- Warm up Three-way Catalytic Converter <CALIFORNIA> Removal (Refer to GROUP 15 – Exhaust Pipe, Muffler and Catalytic Converter.)
- Transmission and Transfer Assembly Removal (M/T: Refer to GROUP 22 – Transmission and Transfer Assembly.) (A/T: Refer to GROUP 23 – Transmission and Transfer Assembly.)

**Post-installation Operation**
- Transmission and Transfer Assembly Installation (M/T: Refer to GROUP 22 – Transmission and Transfer Assembly.) (A/T: Refer to GROUP 23 – Transmission and Transfer Assembly.)
- Front Exhaust Pipe <FEDERAL> (Refer to GROUP 15 – Exhaust Pipe, Muffler and Catalytic Converter.)
- Warm up Three-way Catalytic Converter <CALIFORNIA> Installation (Refer to GROUP 15 – Exhaust Pipe, Muffler and Catalytic Converter.)
- Under Skid Plate, Undercover Installation
- Radiator Installation (Refer to GROUP 14 – Radiator.)
- Battery and Battery Tray Installation
- Cruise Control Intermediate Link Installation and Adjustment (Refer of GROUP 17 – Cruise Control.)
- Hood Installation (Refer to GROUP 42 – Hood.)
- Engine Adjustment
- Accelerator cable Adjustment (Refer to GROUP 17 – On-vehicle Service.)
- Throttle Cable Adjustment <A/T> (Refer to GROUP 23 – On-vehicle Service.)
- Engine Oil Supplying and Checking

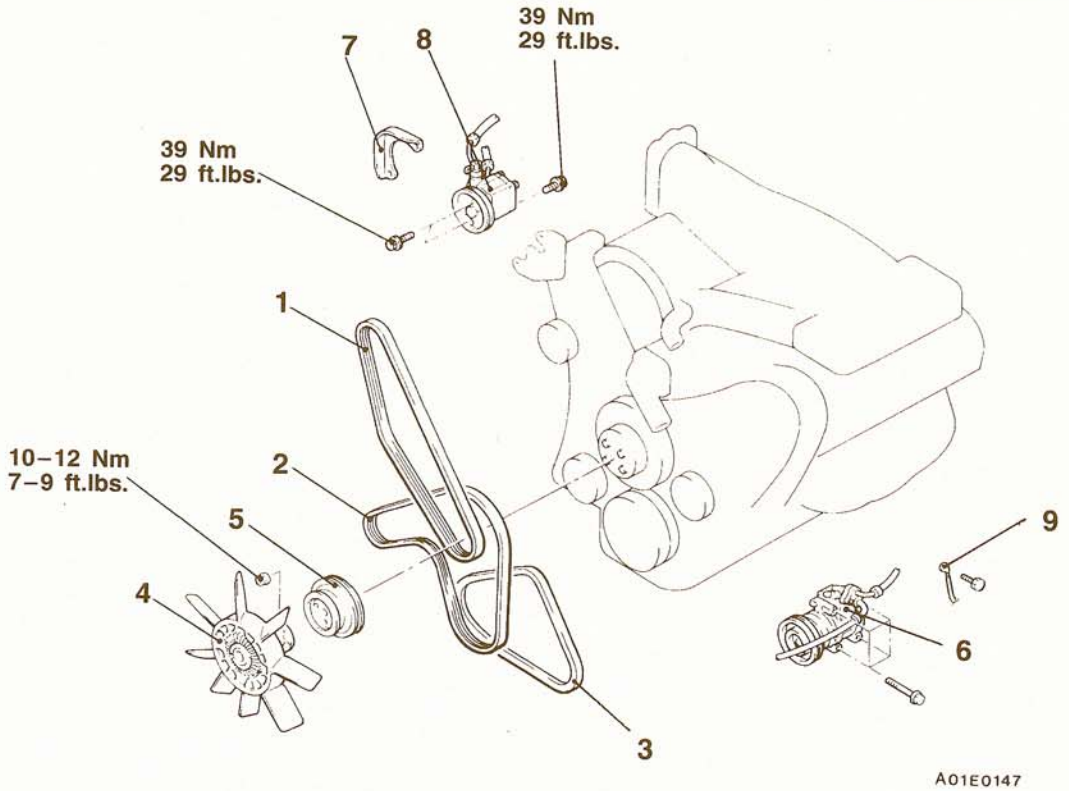


**Removal Steps**

1. Power steering drive belt
2. Generator drive belt
3. A/C drive belt
4. Cooling fan
5. Water pump pulley
6. A/C compressor ◀A▶
7. Cover ◀A▶
8. Power steering pump
9. Ground cable connection

**TSB Revision**

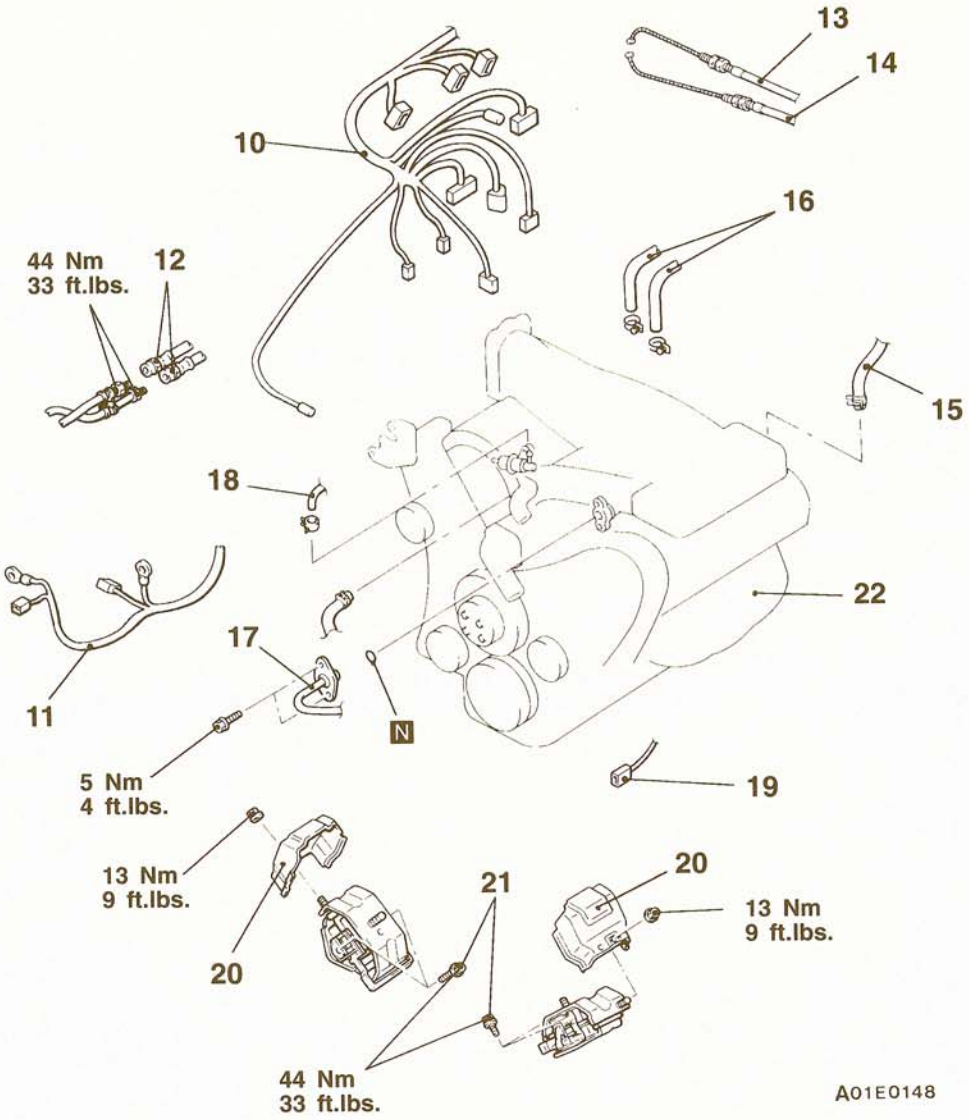


10. Engine control harness connection
11. Generator and starter harness connection
◀B▶ ▶B◀ 12. Engine oil cooler hose connection
13. Accelerator cable connection
14. Throttle cable connection
15. Brake booster vacuum hose connection
16. Heater hose connection
17. Fuel hose connection
18. Fuel return hose connection
19. Oil pressure switch harness connection
20. Heat protectors
21. Engine mounting bolt
◀C▶ ▶A◀ 22. Engine assembly

## REMOVAL SERVICE POINTS

### ◀A▶ COMPRESSOR <A/C>/OIL PUMP (POWER STEERING) REMOVAL

Remove the oil pump and air conditioning compressor (with the hose attached).

NOTE
Suspend the removed oil pump (by using wire or similar material) at a place where no damage will be caused during removal/installation of the engine assembly.

**TSB Revision**

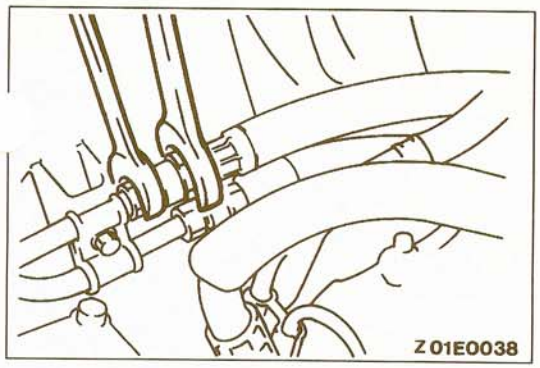


### ◀B▶ OIL COOLER HOSE CONNECTION REMOVAL

Use a spanner or similar tool to remove the oil cooler hose connection.

### ◀C▶ ENGINE ASSEMBLY REMOVAL

(1) Check that all cables, hoses, harness connectors, etc. are disconnected from the engine.
(2) Lift the chain block slowly to remove the engine assembly upward from the engine compartment.

## INSTALLATION SERVICE POINTS

### ▶A◀ ENGINE ASSEMBLY INSTALLATION

Install the engine assembly. When doing so, check carefully that all pipes and hoses are connected, and that none are twisted, damaged, etc.

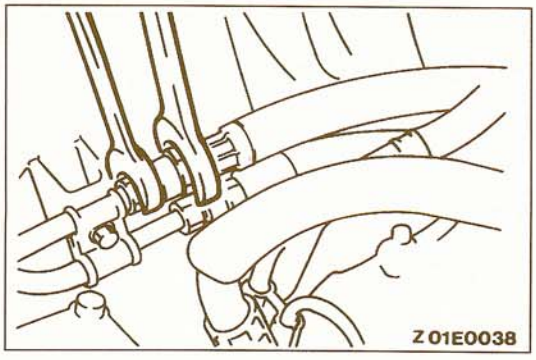


### ▶B◀ OIL COOLER HOSE CONNECTION

Use a spanner or similar tool to connect the oil cooler hose.

# CAMSHAFT OIL SEAL

11200220049

## REMOVAL AND INSTALLATION

**Pre-removal and Post-installation operation**
- Timing Belt Removal and Installation (Refer to GROUP 11A-58.)

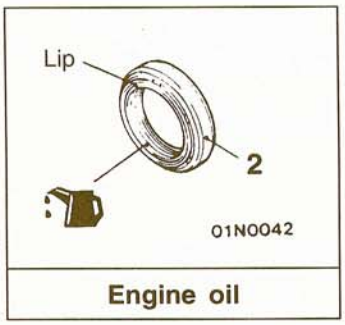


Engine oil

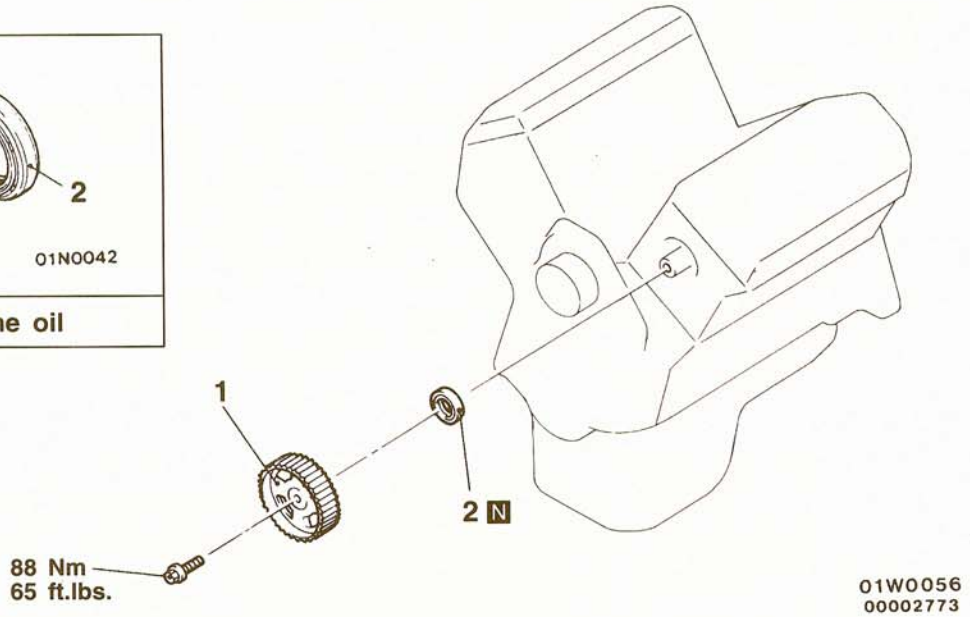


**Removal steps**

◀A▶ ▶B◀ 1. Camshaft sprocket
◀B▶ ▶A◀ 2. Camshaft oil seals

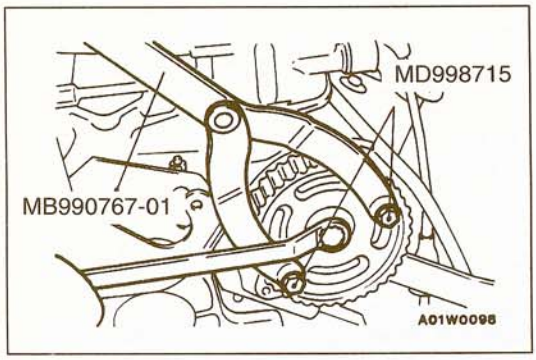


## REMOVAL SERVICE POINTS

### ◀A▶ CAMSHAFT SPROCKET REMOVAL

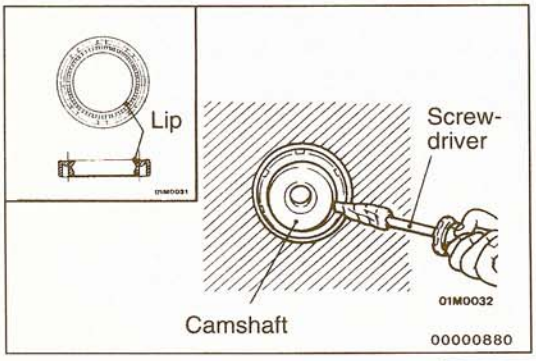


### ◀B▶ CAMSHAFT OIL SEAL REMOVAL

(1) Cut out a portion in the camshaft oil seal lip.
(2) Cover the tip of a screwdriver with a cloth and apply it to the cutout in the oil seal to pry off the oil seal.

**Caution**
**Use care not to damage the camshaft and cylinder heac**

**TSB Revision**

<Right bank side>

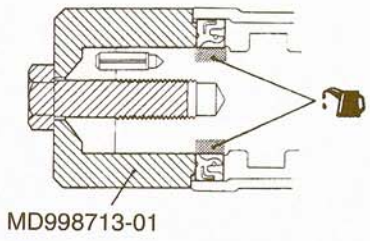


<Left bank side>

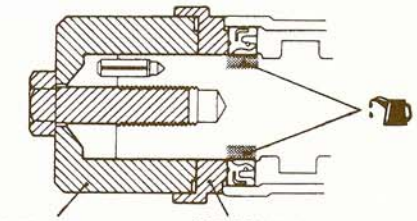


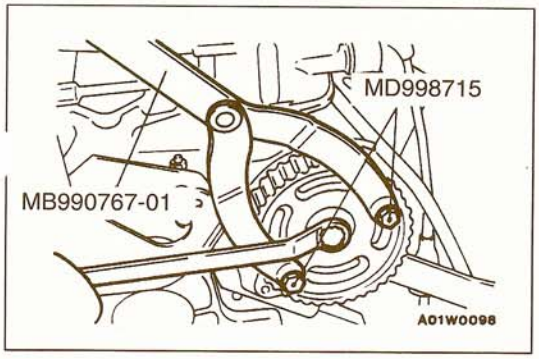


## INSTALLATION SERVICE POINTS

### ▶A◀ CAMSHAFT OIL SEAL INSTALLATION

Coat engine oil on the whole circumference of the oil seal lip section.
Using the special tool, press-fit the oil seal.

### ▶B◀ CAMSHAFT SPROCKET INSTALLATION

# CRANKSHAFT OIL SEALS

11200340127

## FRONT OIL SEAL

## REMOVAL AND INSTALLATION

**Pre-removal and Post-installation Operation**
- Timing Belt Removal and Installation (Refer to P.11A-58.)

**Adjustment**
- Engine Adjustment




Engine oil

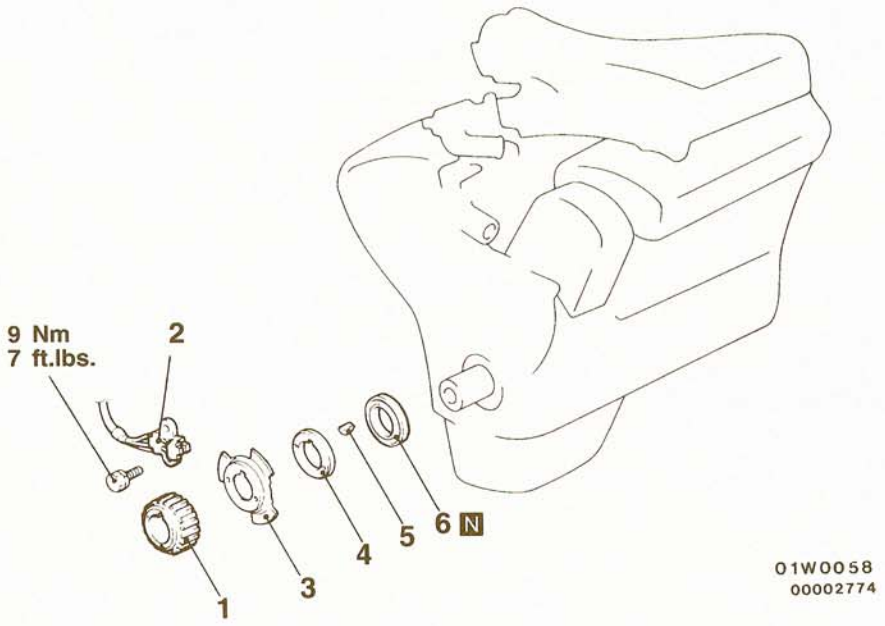


**Removal steps**

1. Crankshaft sprocket
2. Crankshaft position sensor
3. Crankshaft sensing blade
4. Crankshaft spacer
5. Key

◀A▶ ▶A◀ 6. Crankshaft front oil seal

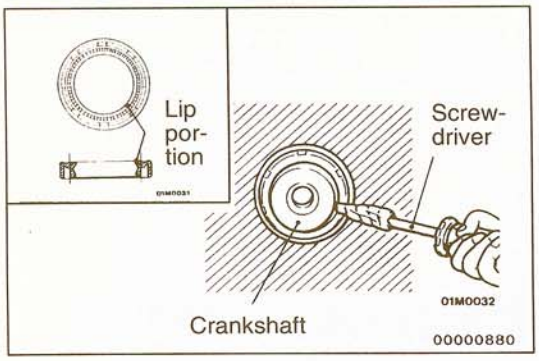


### REMOVAL SERVICE POINT

#### ◀A▶ OIL SEAL REMOVAL

(1) Cut out a portion in the crankshaft oil seal lip.
(2) Cover the tip of a screwdriver with a cloth and apply it to the cutout in the oil seal to pry off the oil seal.

**Caution**
**Take care not to damage the crankshaft and oil pump case.**

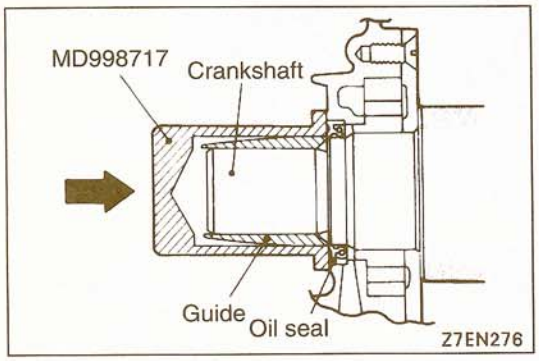


### INSTALLATION SERVICE POINT

#### ▶A◀ OIL SEAL INSTALLATION

Using the special tool, knock the oil seal into the oil pump case.

NOTE
Knock it as far as the surface.

**TSB Revision**

## REAR OIL SEAL
## REMOVAL AND INSTALLATION

11200370126

**Pre-removal and Post-installation Operation**
- Transmission Removal and Installation
  (M/T: Refer to GROUP – 22 Transmission and Transfer Assembly.)
  (A/T: Refer to GROUP 23 – Transmission and Transfer Assembly.)

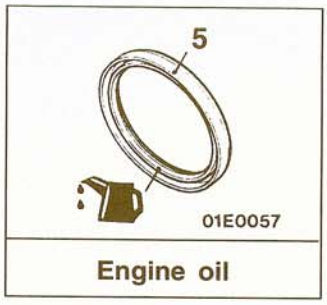


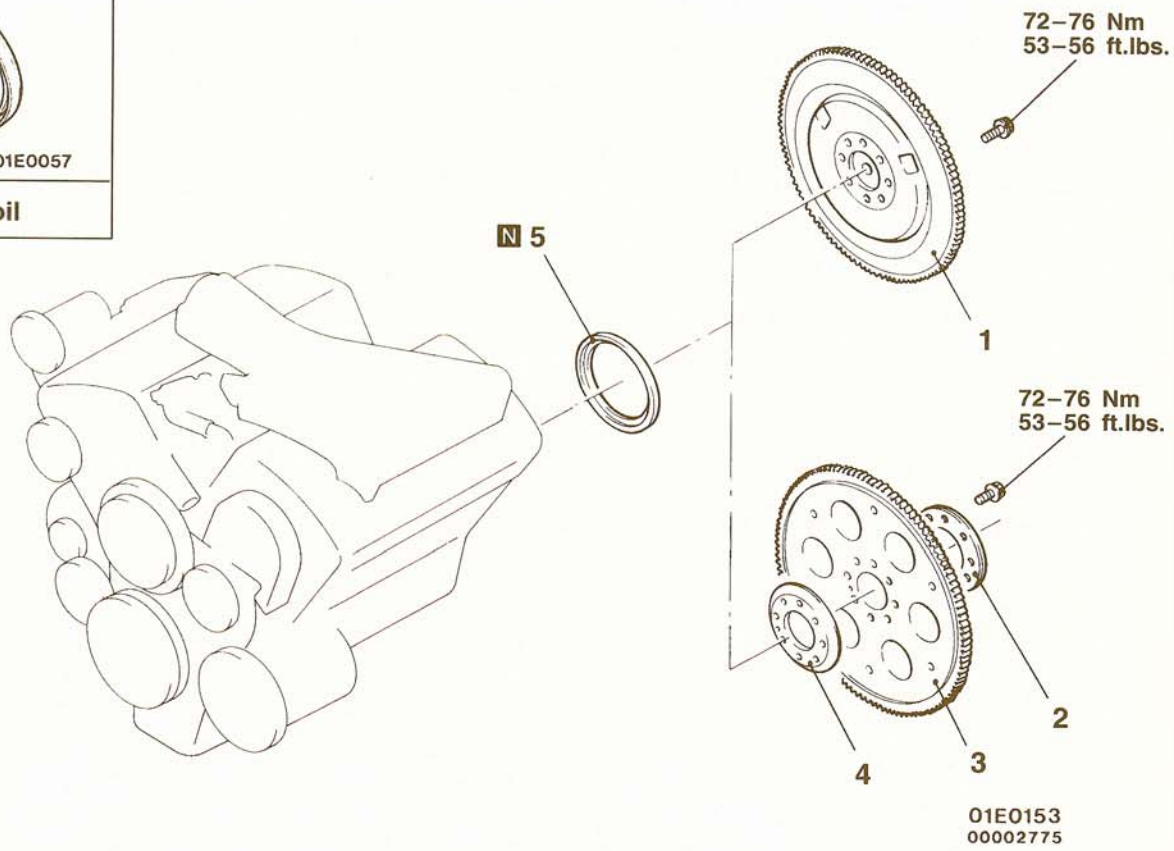


**Removal Steps**

◀A▶ ▶B◀ 1. Flywheel assembly <M/T>
◀A▶ ▶B◀ 2. Adaptor plate A <A/T>
◀A▶ ▶B◀ 3. Drive plate <A/T>
◀A▶ ▶B◀ 4. Adaptor plate B <A/T>
◀B▶ ▶A◀ 5. Oil seal

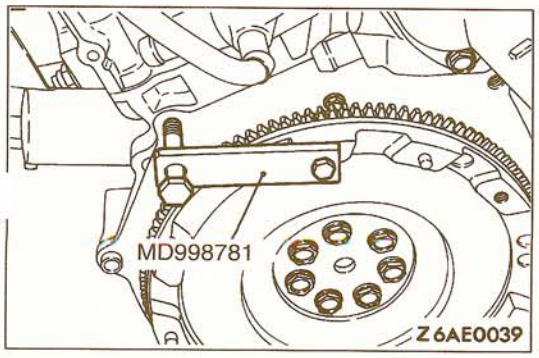


## REMOVAL SERVICE POINTS

### ◀A▶ FLYWHEEL ASSEMBLY <M/T>/ADAPTOR PLATE A <A/T>/DRIVE PLATE <A/T>/ADAPTOR PLATE B REMOVAL

Use the special tool to secure the flywheel assembly or drive plate, and remove the bolt.

**TSB Revision**

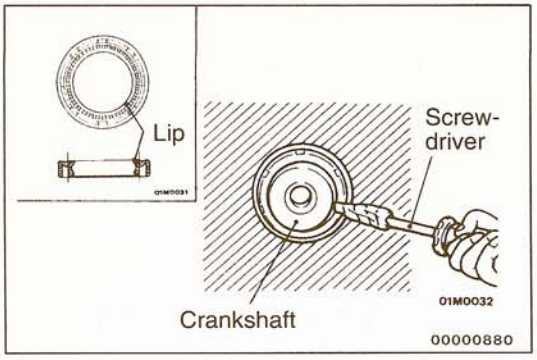


### ◀B▶ OIL SEAL REMOVAL

(1) Cut out a portion in the crankshaft oil seal lip.
(2) Cover the tip of a screwdriver with a cloth and app' it to the cutout in the oil seal to pry off the oil seal.

**Caution**
**Take care not to damage the crankshaft and oil seal case.**

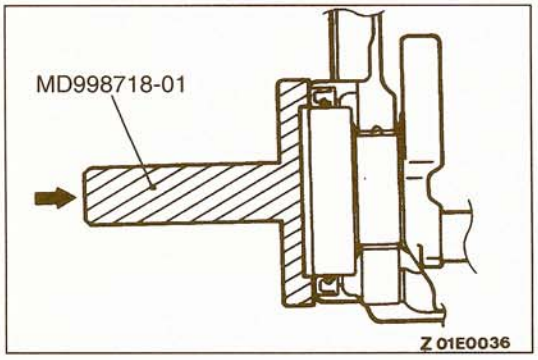


## INSTALLATION SERVICE POINTS

### ▶A◀ OIL SEAL INSTALLATION

Using the special tool, press-fit a new crankshaft rear oil seal into the oil seal case.

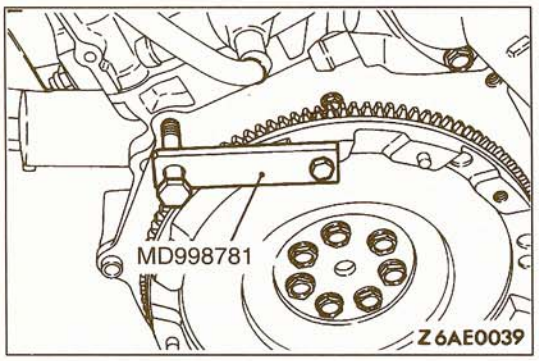


### ▶B◀ ADAPTOR PLATE B <A/T>/DRIVE PLATE <A/T>/ADAPTOR PLATE A <A/T>/FLYWHEEL ASSEMBLY <M/T> INSTALLATION

Use the special tool to secure the drive plate, and tighter the bolts.

# OIL PAN AND OIL SCREEN

11200250079

## OIL PAN, LOWER

### EMOVAL AND INSTALLATION

**Pre-removal and Post-installation Operation**
Removal and Installation
- Under Skid Plate, Undercover
- Front Exhaust Pipe <FEDERAL> (Refer to GROUP 15 – Exhaust Pipe, Mufflers and Catalytic Converter.)
- Warm up Three-way Catalytic Converter <CALIFORNIA> (Refer to GROUP 15 – Exhaust Pipe, Mufflers and Catalytic Conveter.)

Draining and Supplying
- Engine Oil (Refer to GROUP 00 – Maintenance Service.)

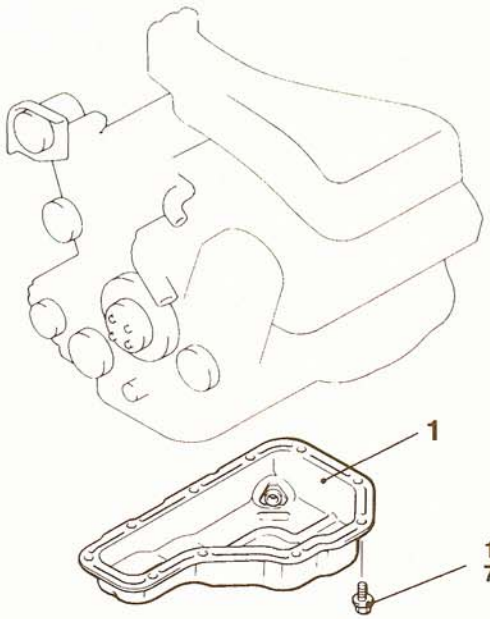


01E0152
00002776

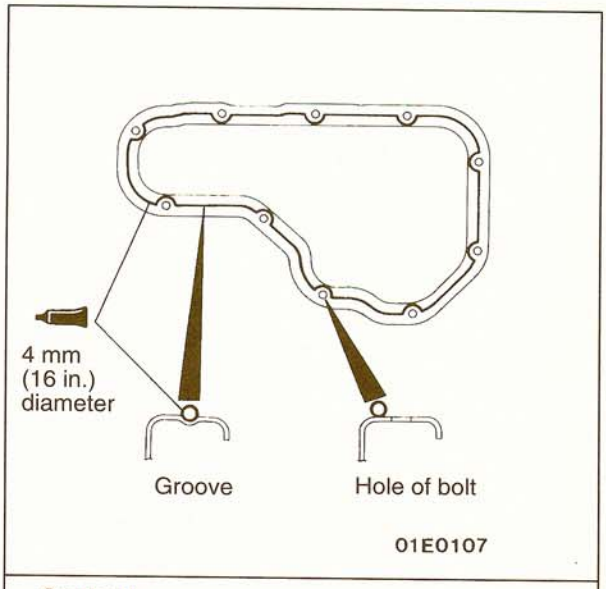


**Sealant:**
**MITSUBISHI GENUINE PART NO. MD970389 or equivalent**

◀A▶ ▶A◀ 1. Oil pan, lower

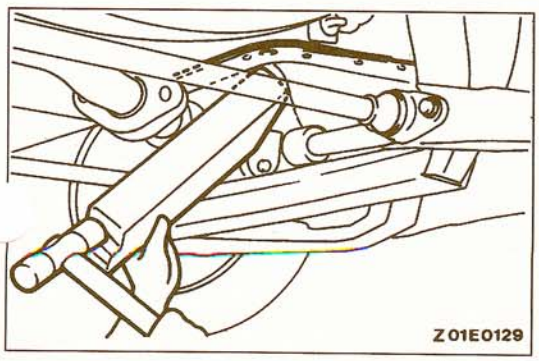


## REMOVAL SERVICE POINT

### ◀A▶ OIL PAN, LOWER REMOVAL

(1) Remove the oil pan, lower installation bolt.
(2) Place a wooden block to the oil pan, lower as shown in the figure and remove by tapping with a hammer.

**Caution**
**The use of an oil pan remover (MD998727) can damage the oil pan, upper (aluminum made).**

**TSB Revision**

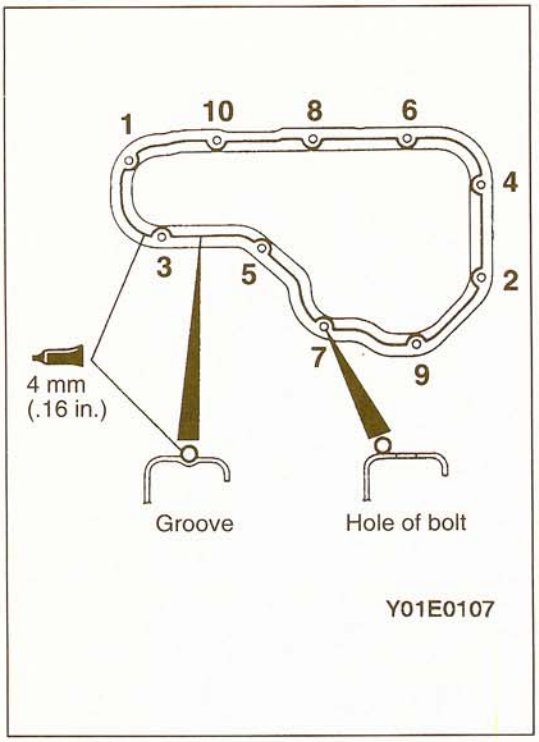


## INSTALLATION SERVICE POINT

### ▶A◀ OIL PAN, LOWER INSTALLATION

(1) Remove sealant from oil pan and cylinder block mati surfaces.
(2) Degrease the sealant-coated surface and the engine mating surface.
(3) Apply the specified sealant around the gasket surface of oil pan as specified in illustration.

**Specified sealant:**
**MITSUBISHI GENUINE PART No. MD970389 or equivalent**

NOTE
The sealant should be applied in a continuous bead approximately 4 mm (.16 in.) in diameter.

(4) Assemble oil pan to cylinder block within 30 minutes after applying the sealant.
(5) Tighten the oil pan mounting bolt in the order illustrated (left).

# OIL PAN, UPPER AND OIL SCREEN

## REMOVAL AND INSTALLATION

**Pre-removal and Post-installation Operation**
Removal and Installation
- Oil pan, Lower (Refer to P.11-51.)
- Front Differential Carrier (Refer to GROUP 26 – Differential Carrier and Free-Wheeling Clutch.)

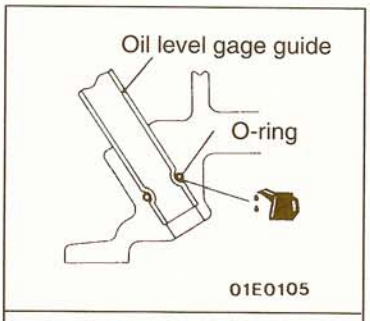


**Engine oil**

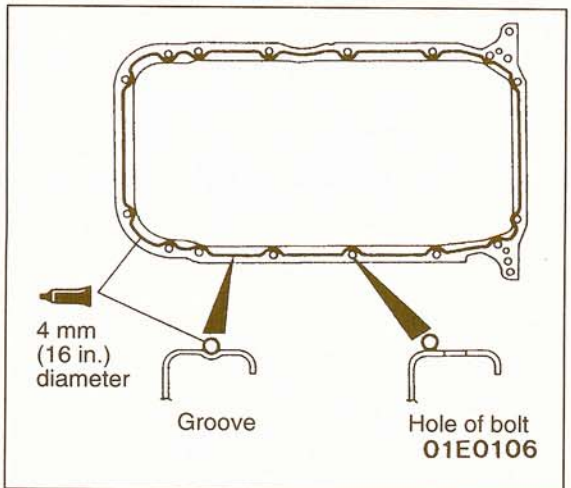


**Sealant:**
**MITSUBISHI GENUINE PART NO.**
**MD970389 or equivalent**

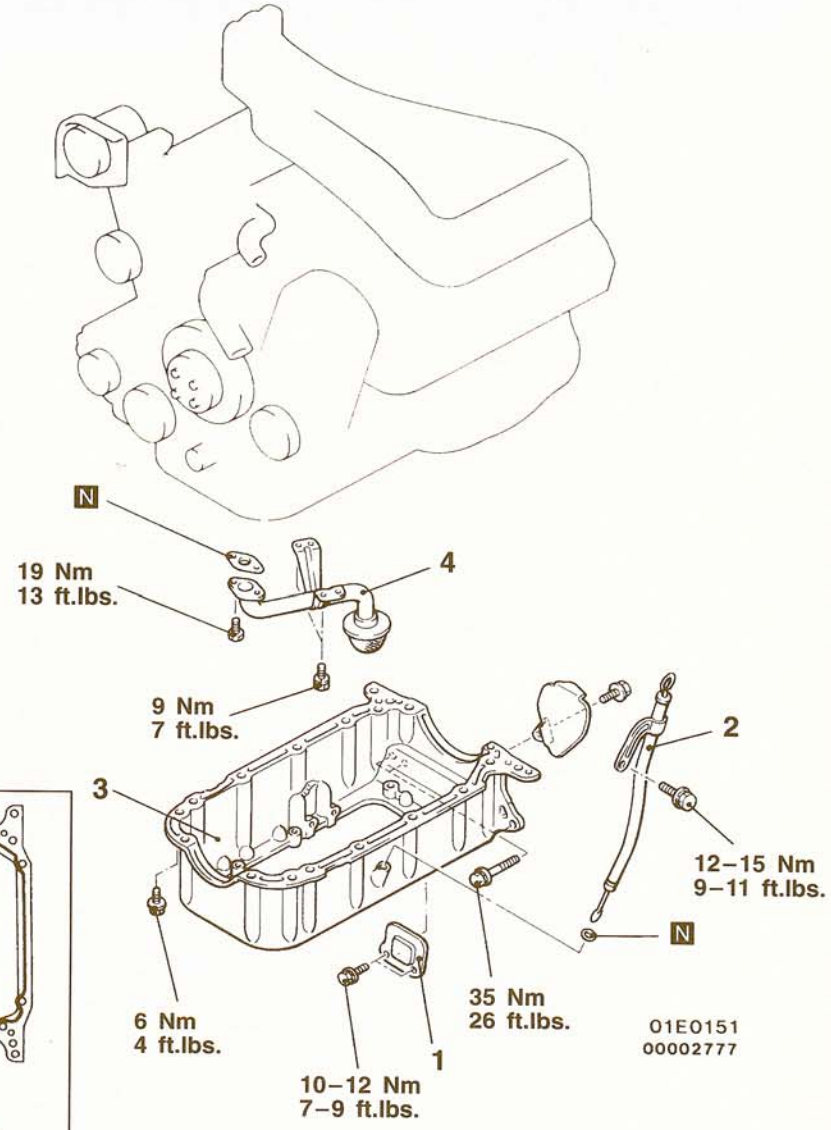


**Removal steps**
1. Cover
2. Oil level gage guide

◀A▶ ▶A◀ 3. Oil pan, upper
4. Oil screen

**TSB Revision**

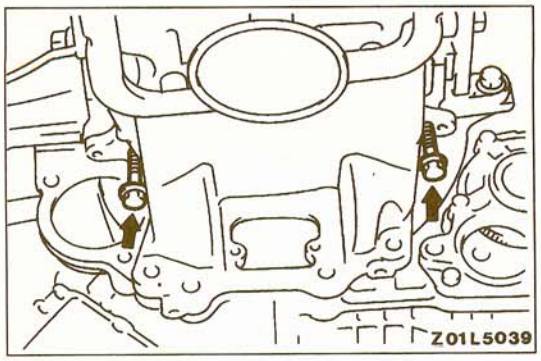


## REMOVAL SERVICE POINT

### ◀A▶ OIL PAN, UPPER REMOVAL

Install a bolt [diameter × length: 10 × 38 mm (.39 × 1.5 in.)] to link the oil pan, upper with the transmission in the hole of the oil pan, upper as shown in the illustration, and then tighten the bolt to remove the oil pan, upper.

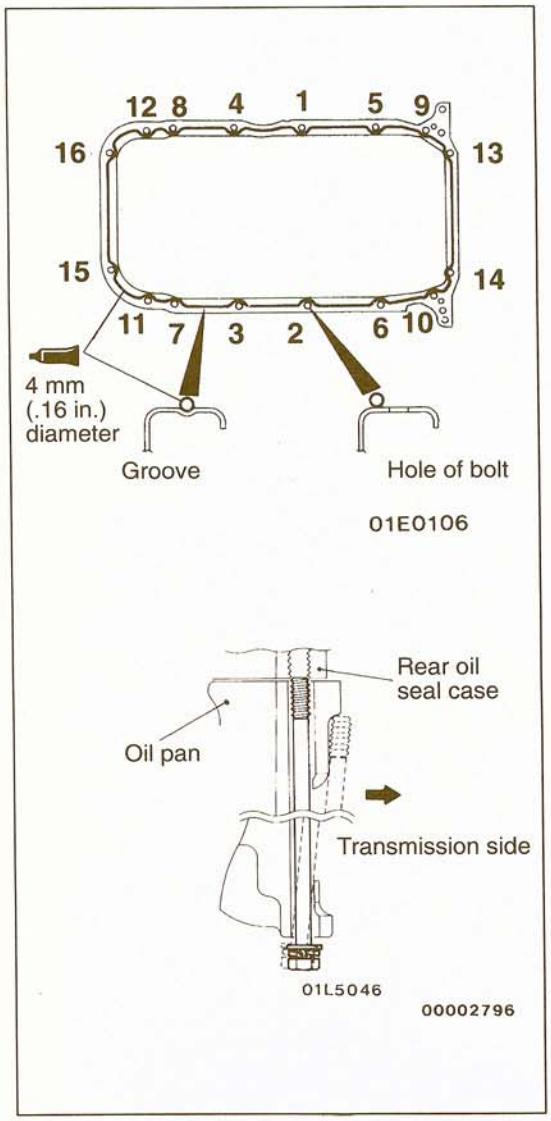


## INSTALLATION SERVICE POINT

### ▶A◀ OIL PAN, UPPER INSTALLATION

(1) Remove the sealant from the oil pan and cylinder block mating surfaces.
(2) Degrease the sealant-coated surface and the engine mating surface.
(3) Apply specified sealant around the gasket surface of the oil pan as shown in the illustration.

**Specified sealant:**
**MITSUBISHI GENUINE PART No. MD970389 or equivalent**

NOTE
The sealant should be applied in a continuous bead approximately 4 mm (.16 in.) in diameter.

(4) Install the oil pan to the cylinder block within 30 minutes after applying the sealant.
(5) Tighten the oil pan mounting bolts in the order shown in the illustration at left.

**Caution**
**The bolt holes for bolts 13 and 14 in the illustration are cut away on the transmission side, so be careful not to insert these bolts at an angle.**

## INSPECTION

11200260034

- Check the oil pan for cracks.
- Check the sealant-coated surface of the oil pan for damage and deformation.

# CYLINDER HEAD GASKET

11200400160

## REMOVAL AND INSTALLATION

**Pre-removal and Post-installation Operation**
- Engine Coolant Draining and Supplying (Refer to GROUP 00 – Maintenance Service.)
- Timing Belt Removal and Installation (Refer to P.11A-58.)
- Intake Manifold Removal and Installation (Refer to GROUP 15 – Intake Manifold.)

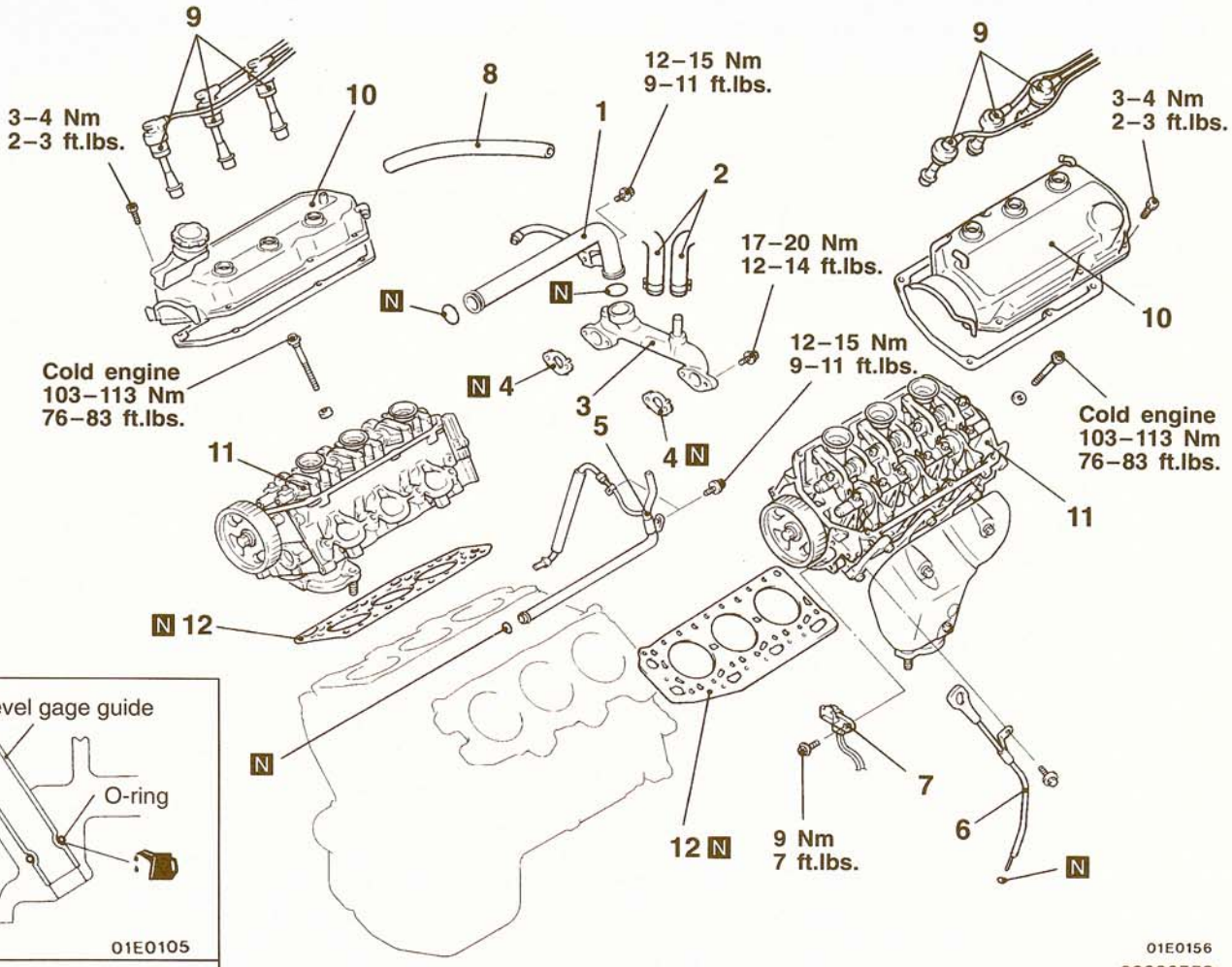





Engine oil

**Removal steps**

- ▶C◀ 1. Water outlet pipe
- 2. Heater hose
- ▶D◀ 3. Water passage
- ▶D◀ 4. Gasket
- ▶C◀ 5. Water pipe and hose assembly
- 6. Oil level gage guide <Only left bank is removed>
- 7. Camshaft position sensor <Only left bank is removed>
- 8. Ventilation hose
- 9. Spark plug cable
- 10. Rocker cover
- ◀A▶ ▶B◀ 11. Cylinder head assembly
- ▶A◀ 12. Cylinder head gasket

TSB Revision

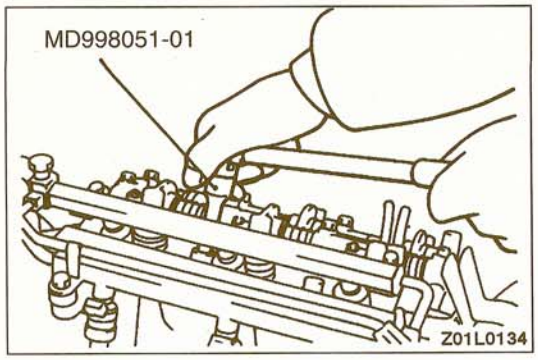


## REMOVAL SERVICE POINT

### ◀A▶ CYLINDER HEAD ASSEMBLY REMOVAL

Using the special tool, after loosening the bolts (in 2 or cycles), remove the cylinder head assembly.

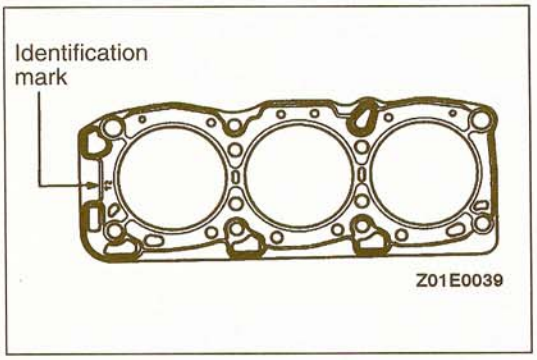


## INSTALLATION SERVICE POINTS

### ▶A◀ CYLINDER HEAD GASKET INSTALLATION

(1) Degrease the mounting surface of the cylinder head gasket.
(2) Lay the cylinder head gasket on cylinder block with the identification mark at front top.

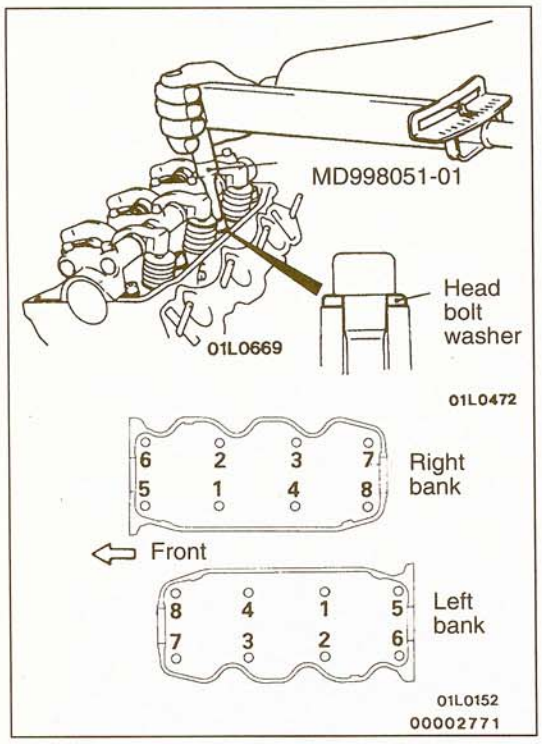


### ▶B◀ CYLINDER HEAD ASSEMBLY INSTALLATION

Using the special tool, tighten the bolts in the order shown in two or three steps.

**Caution**
**Attach the head bolt washer in the direction shown in the figure.**

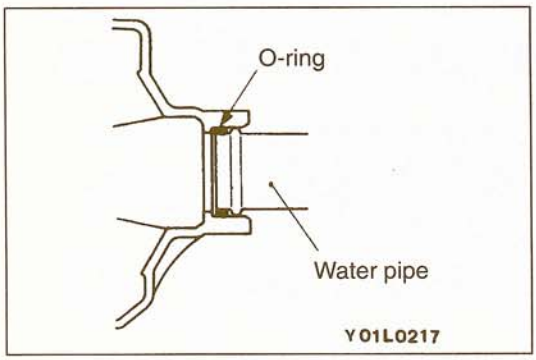


### ▶C◀ WATER PIPE AND HOSE ASSEMBLY / WATER OUTLET PIPE INSTALLATION

Rinse the mounting location of the O-ring and water pipe with water, and install the O-ring and water pipe.

**Caution**
1. **Do not apply oil and grease to water pipe O-ring.**
2. **Keep the water pipe connections free of stand, dust, etc.**
3. **Insert water pipe until its end bottoms.**

**TSB Revision**

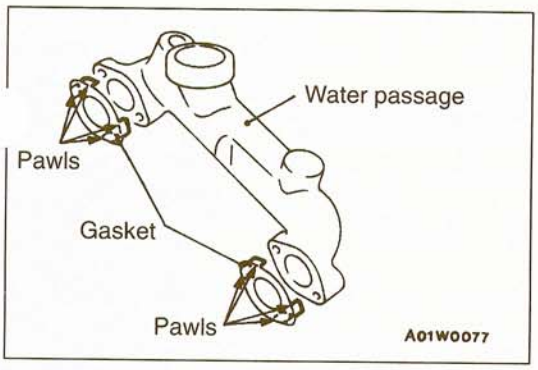


### ▶D◀ GASKET/WATER PASSAGE INSTALLATION

Bend the tabs onto the water passage assembly, and then install the water passage assembly to the cylinder head so that the gasket doesn't slip.

# TIMING BELT

11200430169

## REMOVAL AND INSTALLATION

**Pre-removal Operation**
- Radiator Removal
  (Refer to GROUP 14 – Radiator.)
- Generator Removal
  (Refer to GROUP 16 – Generator.)
- Under Skid Plate, Undercover Removal

**Post-installation Operation**
- Under Skid Plate, Undercover Installation
- Generator Installation
  (Refer to GROUP 16 – Generator.)
- Radiator Installation (Refer to GROUP 14 – Radiator.)
- Engine Adjustment

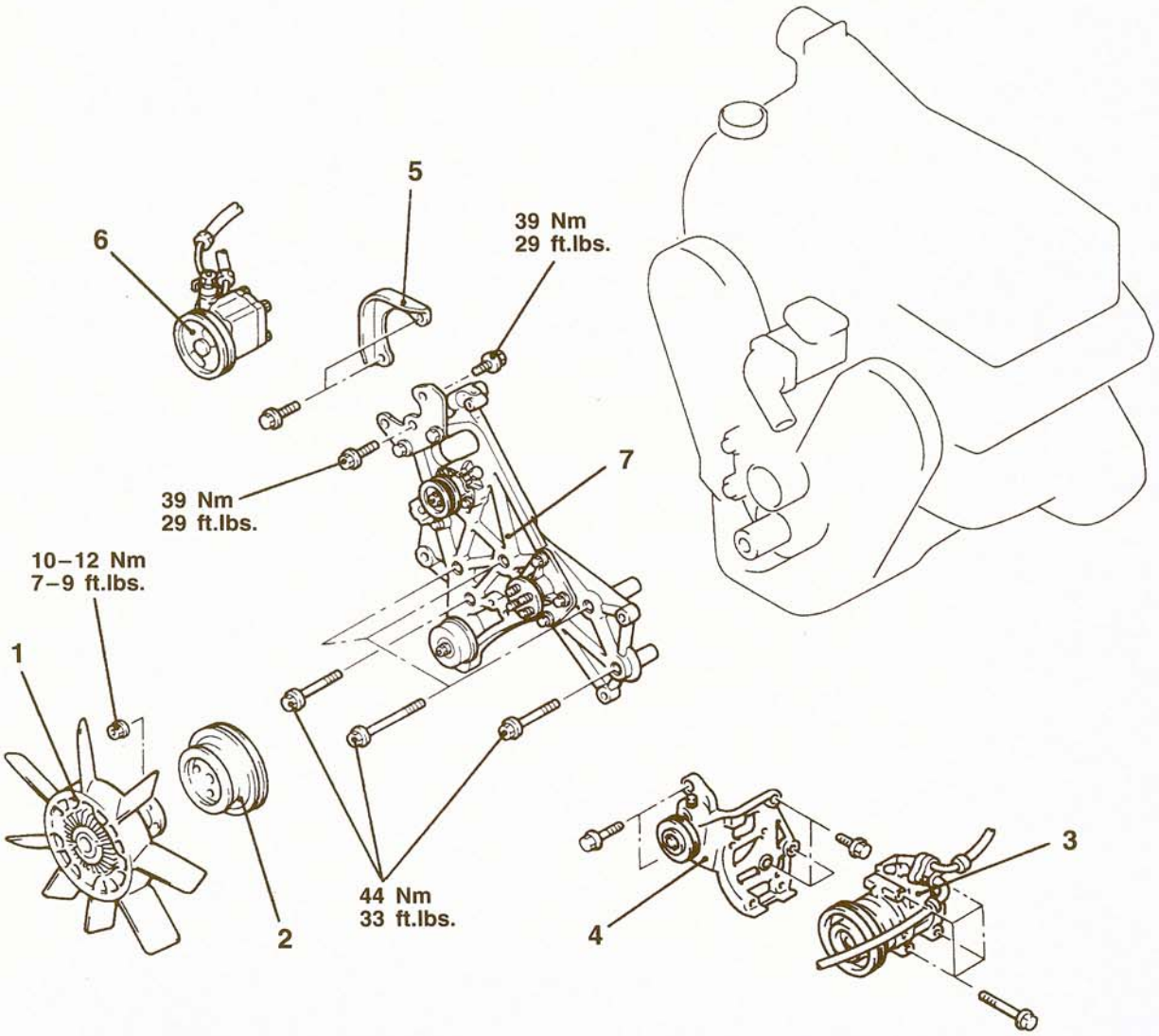


C01W0074

**Removal steps**

1. Cooling fan clutch assembly
2. Water pump pulley
3. Compressor <A/C>
4. Compressor bracket <A/C>
5. Cover
6. Power steering oil pump
7. Accessory mount

◀A▶ ◀A▶

**TSB Revision**

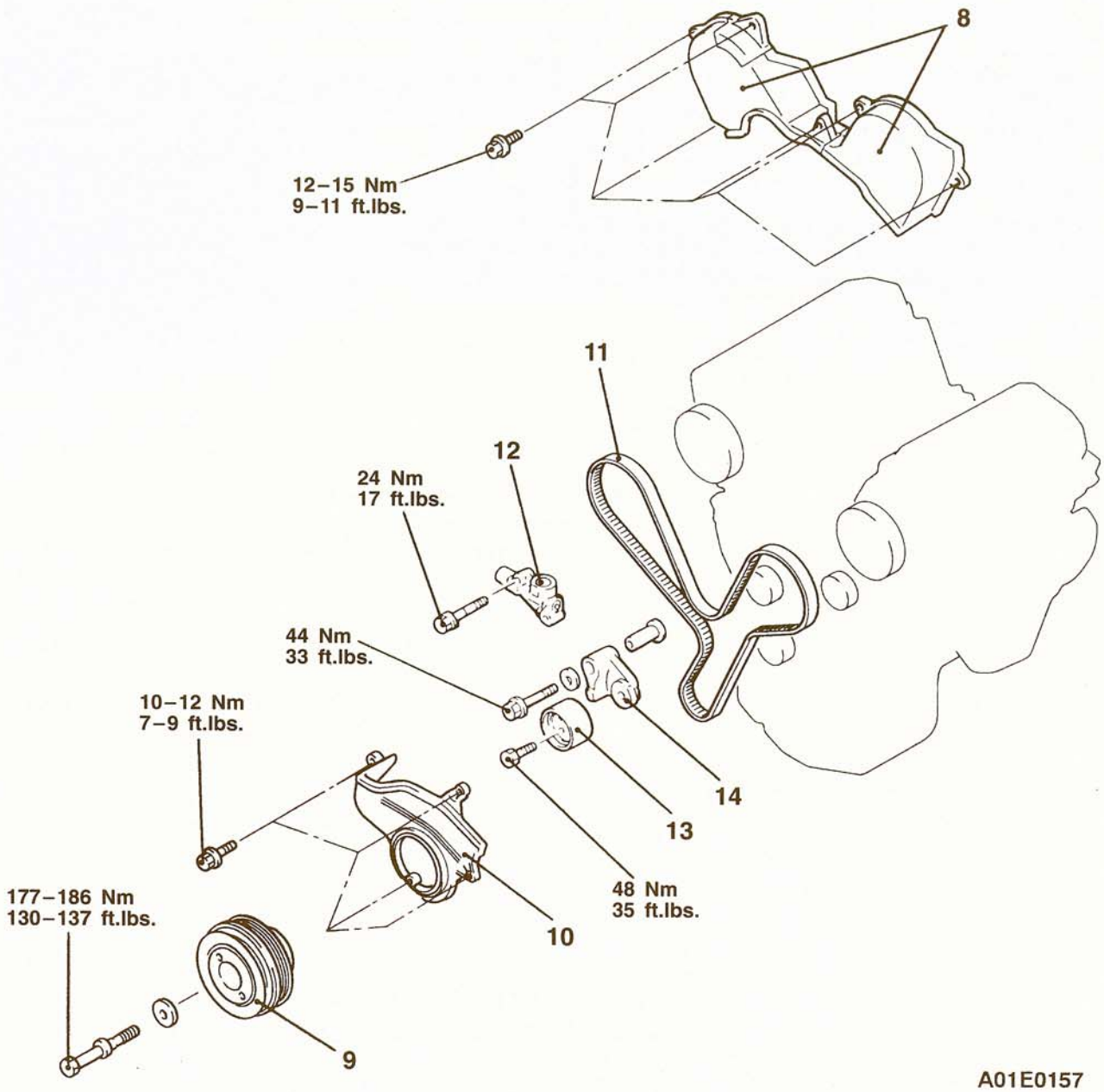


8. Timing belt upper cover
◀B▶ ▶C◀ 9. Crankshaft pulley
10. Timing belt lower cover
◀C▶ ▶B◀ 11. Timing belt
▶A◀ 12. Auto tensioner
13. Tension pulley
14. Tension arm assembly

## REMOVAL SERVICE POINTS

### ◀A▶ COMPRESSOR <A/C>/OIL PUMP (POWER STEERING) REMOVAL

Remove the oil pump and air conditioning compressor (with the hose attached).

NOTE
Suspend the removed oil pump (by using wire or similar material) at a place where no damage will be caused during removal/installation of the engine assembly.

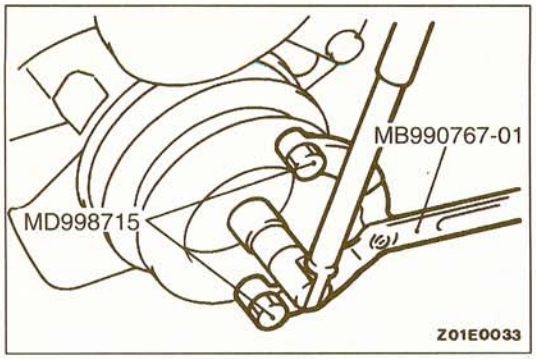


### ◀B▶ CRANKSHAFT PULLEY REMOVAL

Using special tools, remove the crankshaft pulley from the crankshaft.

**Caution**
**Use only the specified special tools, or a damaged pulley damper could result.**

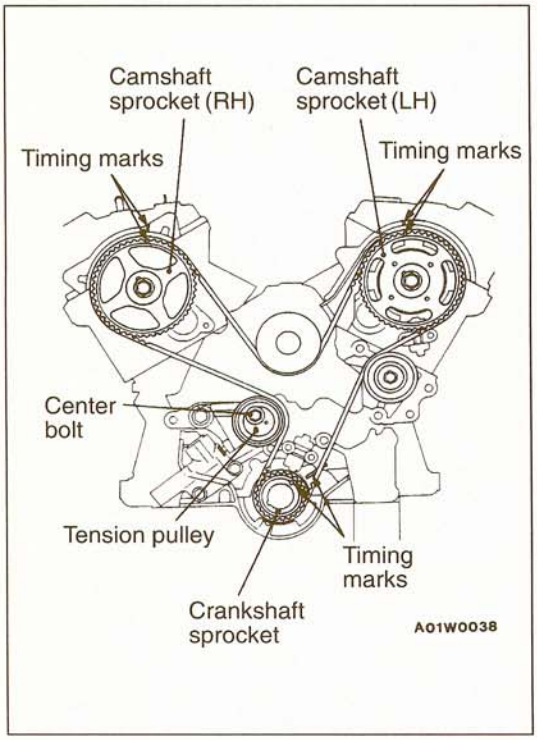


### ◀C▶ TIMING BELT REMOVAL

(1) Align the timing marks.
(2) Loosen the center bolt on the tension pulley to remove the timing belt.

**Caution**
**Make a mark on the back of the timing belt, indicating the direction of rotation, so it may be reassembled in the same direction, if it is to be reused.**

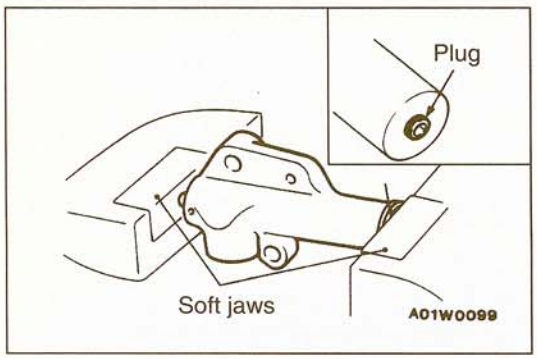


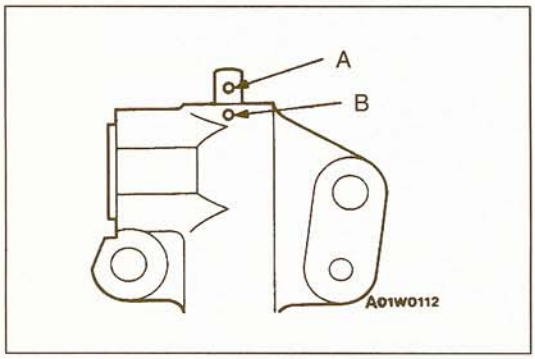


## INSTALLATION SERVICE POINTS

### ▶A◀ AUTO TENSIONER INSTALLATION

(1) If the auto tensioner rod is in its fully extended position, reset it as follows.
  1) Keep the auto tensioner level and, in that position, clamp it in the vise with soft jaws.
  2) Push in the rod little by little with the vise until the set hole A in the rod is aligned with that B in the cylinder.

**Caution**
1. **The auto tensioner must be placed at a right angle to the pressing surface of press or vise.**
2. **Push in the rod slowly to prevent the push rod from being damaged.**

TSB Revision

3) Insert a wire [1.4 mm (.055 in.) in diameter] into the set holes.

NOTE
The wire should be as stiff as possible (such as piano wire, etc.), and should be bent into the shape of an "L".

4) Unclamp the auto tensioner from the vise.

(2) Install the auto tensioner.

**Caution**
**Leave the wire installed in the auto tensioner.**

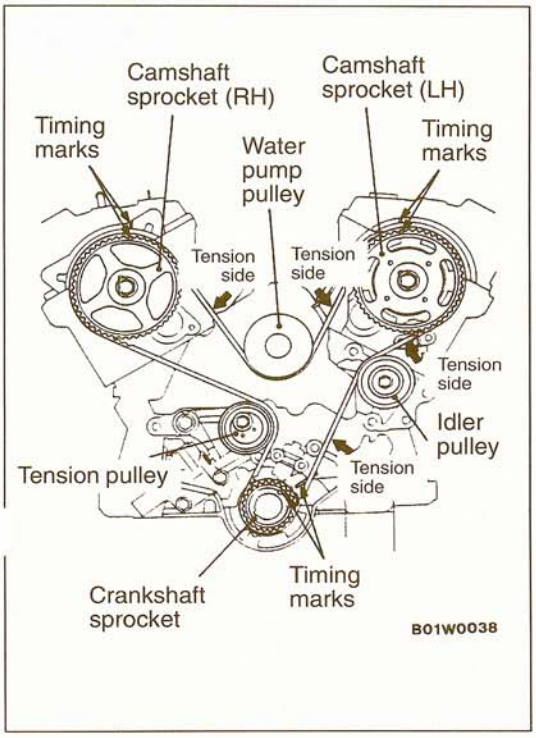


## ▶B◀ TIMING BELT INSTALLATION

(1) Align the timing marks of the camshaft sprockets and crankshaft sprocket.

(2) Install the timing belt by the following procedure so that there is no defection in the timing belt between each sprocket and pulley.
1. Crankshaft sprocket
2. Idler pulley
3. Camshaft sprocket (left side)
4. Water pump pulley
5. Camshaft sprocket (right side)
6. Tension pulley

**Caution**
**The camshaft sprocket (right side) can turn easily due to the spring force applied, so be careful not to get your fingers caught.**

(3) Turn the camshaft sprocket (right side) counterclockwise until the tension side of the timing belt is firmly stretched, and then check again that all timing marks are aligned.

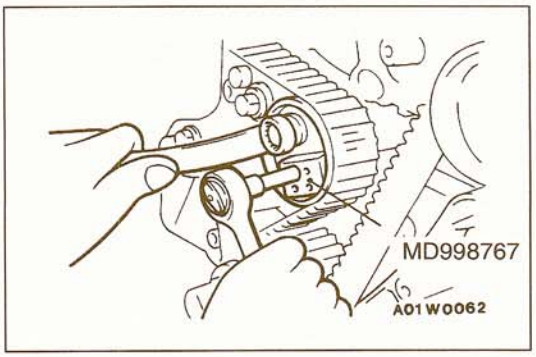


(4) Use the special tool to push the tension pulley into the timing belt, and then temporarily tighten the center bolt.

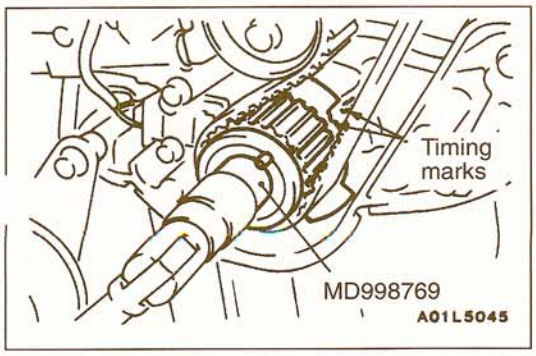


(5) Use the special tool to turn the crankshaft 1/4 of a turn counterclockwise and then turn it again clockwise until the timing marks are aligned.

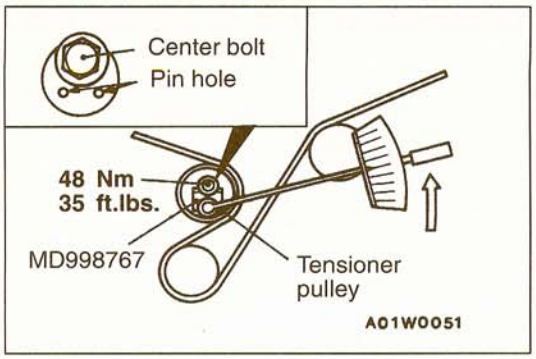


(6) Loosen the center bolt on the tensioner pulley. Using the special tool and torque wrench, apply tensioning torque to the timing belt and, at the same time, tighten the center bolt to specification.

**Reference value:**
**4.4 Nm (3.3 ft.lbs.) (Timing belt tensioning torque)**

**Caution**
**When tightening the center bolt, make sure that the tensioner pulley is not rotated together.**

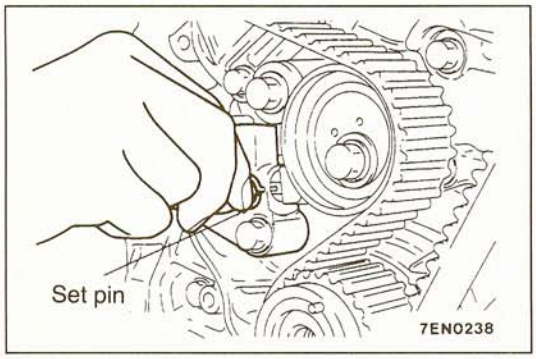


(7) Remove the setting pin that has been inserted into the auto tensioner.
(8) Turn the crankshaft two turns clockwise to align the timing marks.

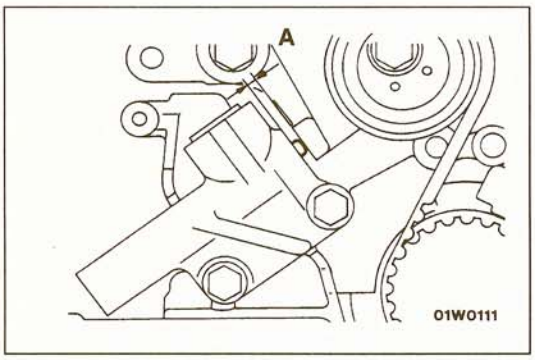


(9) Leave everything in this condition for five minutes or more, and then check that the protrusion of the auto tensioner push rod is within the range of the standard value.

**Standard value (A): 3.8 to 4.5 mm (.149 to .177 in.)**

(10) If the protrusion is out of specification, repeat steps (5, to (9).
(11) Check again that timing marks on all sprockets are aligned properly.

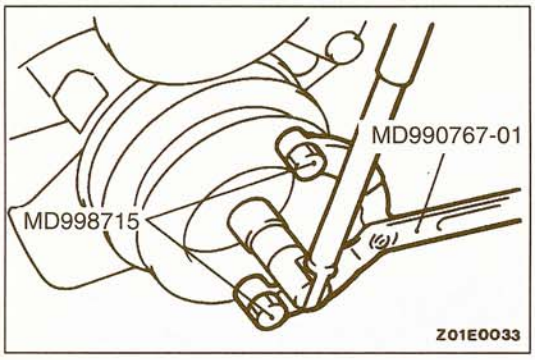


### ▶C◀ CRANKSHAFT PULLEY INSTALLATION

Using the special tool, attach the crankshaft pulley to the crankshaft.

**Caution**
**Use only the specified special tools, otherwise a damaged pulley damper could result.**

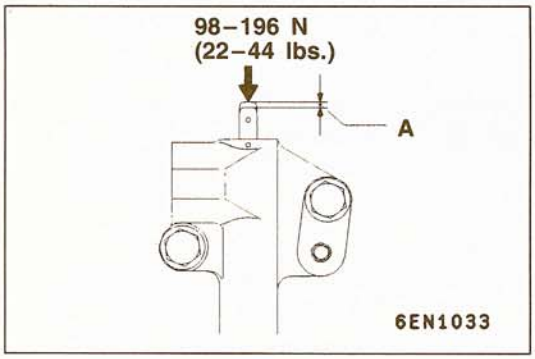


## INSPECTION

11200440032

### AUTO TENSIONER

(1) Hold the auto tensioner by hand and measure contraction (A) when pressing the tip of the rod on a steel (cylinder block; etc.) with a force of 98–196 N (22–44 lbs.).

**Standard value (A): 1 mm (.04 in.) or less**

(2) If not within the standard value, replace the auto tensioner.

# ENGINE OIL COOLER

12100130056

## REMOVAL AND INSTALLATION

**Pre-removal Operation**
- Radiator Grille Removal

**Post-installation Operation**
- Radiator Grille Installation
- Engine Oil Supplying and Checking

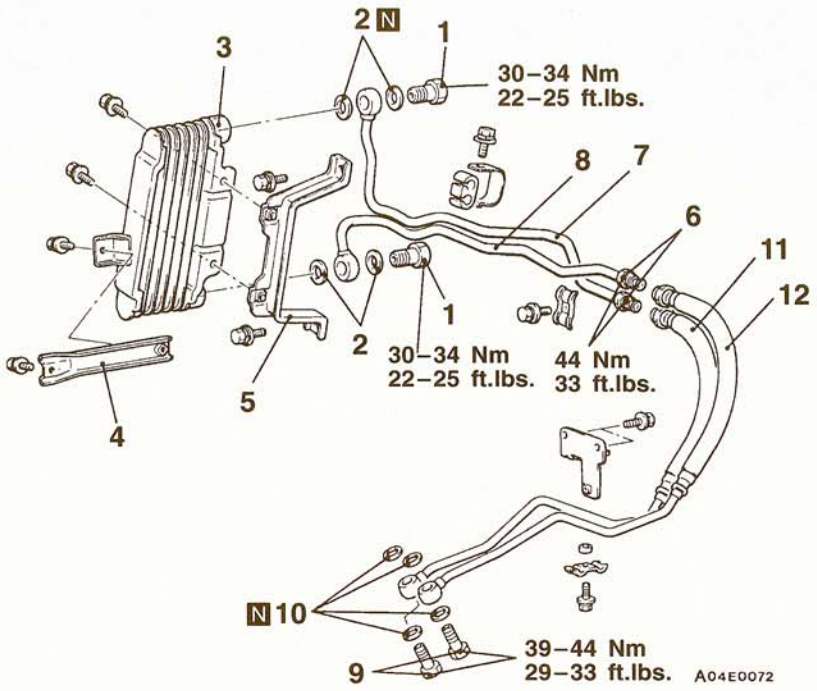


**Removal steps**

◀A▶ 1. Eye bolts
2. Gaskets
3. Engine oil cooler
4. Stay
5. Bracket
6. Engine oil cooler pipe connection
7. Return pipe
8. Feed pipe
◀A▶ 9. Eye bolts
10. Gaskets
11. Return hose
12. Feed hose

## REMOVAL SERVICE POINT

### ◀A▶ EYE BOLTS REMOVAL

**Caution**
**Be sure to hold the weld nut of the oil cooler while loosening the eye bolt.**

## INSPECTION

12100140059

- Check for foreign material between the oil cooler fins.
- Check the oil cooler fins for bends or damage.
- Check the oil cooler pipes for cracks, damage, clogging or deterioration.

**TSB Revision**

NOTES

# ENGINE OVERHAUL

# <3.0L>

## CONTENTS

11309000111


BRACKET ..... 76

CRANKSHAFT, FLYWHEEL AND DRIVE PLATE ..... 70

CYLINDER HEAD AND VALVE ..... 47

EXHAUST MANIFOLD ..... 36

GENERATOR AND DRIVE BELT ..... 15

IGNITION SYSTEM ..... 20

INTAKE MANIFOLD AND FUEL PARTS ..... 31

INTAKE MANIFOLD PLENUM AND THROTTLE BODY ..... 18

OIL PAN AND OIL PUMP ..... 55

PISTON AND CONNECTING ROD ..... 63

ROCKER ARMS AND CAMSHAFT ..... 39

SPECIAL TOOLS ..... 12

SPECIFICATIONS ..... 2

- General Specifications ..... 2
- Rework Dimensions ..... 7
- Sealant ..... 11
- Service Specifications ..... 3
- Torque Specifications ..... 8

TIMING BELT ..... 23

# SPECIFICATIONS

11300020024

## GENERAL SPECIFICATIONS

| Descriptions | | | Specifications |
|---|---|---|---|
| Type | | | 60° V, DOHC (per bank) |
| Number of cylinders | | | 6 |
| Combustion chamber | | | Compact type |
| Total displacement $cm^3$ (cu.in.) | | | 2,972 (181.4) |
| Cylinder bore mm (in.) | | | 91.1 (3.59) |
| Piston stroke mm (in.) | | | 76.0 (2.99) |
| Compression ratio (12 valve engine) | | | 8.9 |
| Compression ratio (24 valve engine) | | | 9.0 |
| Valve timing 12 valve engine | Intake valve | Opens (BTDC) | 19° |
| | | Closes (ABDC) | 59° |
| | Exhaust valve | Opens (BBDC) | 59° |
| | | Closes (ATDC) | 19° |
| Valve timing 24 valve engine | Intake valve | Opens (BTDC) | 19° |
| | | Closes (ABDC) | 45° |
| | Exhaust valve | Opens (BBDC) | 49° |
| | | Closes (ATDC) | 15° |
| Lubrication system | | | Pressure feed, full-flow filtration |
| Oil pump type | | | Trochoid type |
| Cooling system | | | Water-cooled forced circulation |
| Water pump type | | | Centrifugal impeller type |
| EGR type | | | Single type |
| Injector type and number | | | Electromagnetic, 6 |
| Injector identification mark (12 valve engine) | | | B210H |
| Injector identification mark (24 valve engine) | | | SDH210 |
| Throttle bore mm (in.) | | | 60 (2.36) |
| Throttle position sensor | | | Variable resistor type |
| Closed throttle position switch | | | Movable contact type, within throttle position sensor |

**TSB Revision**

## SERVICE SPECIFICATIONS

11300030164

| Items | | | Standard value | Limit |
|---|---|---|---|---|
| **Generator and ignition system** | | | | |
| Drive belt (12 valve engine) | Tension N (lbs.) | New belt | 500–700 (110–154) | – |
| | | Used belt | 400 (88) | – |
| | Deflection mm (in.) (Reference value) | New belt | 6.5–8.0 (.26–.32) | – |
| | | Used belt | 9.0 (.35) | – |
| Drive belt (24 valve engine) | Tension N (lbs.) | New belt | 637–833 (141–184) | – |
| | | Used belt | 441–539 (98–119) | – |
| | Deflection A mm (in.) (Reference value) | New belt | 4.0–5.0 (.16–.20) | – |
| | | Used belt | 5.5–6.5 (.22–.26) | – |
| | Deflection B mm (in.) (Reference value) | New belt | 5.5–7.5 (.22–.30) | – |
| | | Used belt | 8.0–9.0 (.31–.35) | – |
| **Fuel and emission parts** | | | | |
| Injector coil resistance Ω | | | 13–16 at 20°C (68°F) | – |
| **Rocker arms and camshaft** | | | | |
| Camshaft | Cam height mm (in.) (12 valve engine) | | 41.25 (1.62) | 40.75 (1.60) |
| Camshaft | Cam height mm (in.) (24 valve engine) | Intake | 37.58 (1.48) | 37.08 (1.46) |
| | | Exhaust | 36.95 (1.45) | 36.45 (1.44) |
| Camshaft | Journal diameter mm (in.) (12 valve engine) | | 33.94 (1.34) | – |
| | Journal diameter mm (in.) (24 valve engine) | | 44.93 (1.77) | – |

A: Between cooling fan pulley and crankshaft pulley
B: Between cooling fan pulley and generator

| Items | | | Standard value | Limit |
|---|---|---|---|---|
| **Cylinder head and valve** | | | | |
| Cylinder head | Flatness of gasket surface mm (in.) (12 valve engine) | | 0.05 (.0020) | 0.2 (.008) |
| | Flatness of gasket surface mm (in.) (24 valve engine) | | 0.03 (.0012) | 0.2 (.008) |
| | Grinding limit of gasket surface *Includes/combined with cylinder block grinding mm (in.) | | – | *0.2 (.008) |
| | Overall height mm (in.) (12 valve engine) | | 84 (3.31) | – |
| | Overall height mm (in.) (24 valve engine) | | 120 (4.72) | – |
| Valve | Thickness of valve head (margin) mm (in.) (12 valve engine) | Intake | 1.2 (.047) | 0.7 (.028) |
| | | Exhaust | 2.0 (.079) | 1.5 (.059) |
| | Thickness of valve head (margin) mm (in.) (24 valve engine) | Intake | 1.0 (.039) | 0.5 (.019) |
| | | Exhaust | 1.2 (.047) | 0.7 (.028) |
| | Stem diameter mm (in.) (12 valve engine) | Intake | 8.0 (.315) | – |
| | | Exhaust | 7.9 (.311) | – |
| | Stem diameter mm (in.) (24 valve engine) | Intake | 6.0 (.236) | – |
| | | Exhaust | 6.0 (.236) | – |
| | Stem to guide clearance mm (in.) (12 valve engine) | Intake | 0.03–0.06 (.0012–.0024) | 0.10 (.004) |
| | | Exhaust | 0.05–0.09 (.0020–.0035) | 0.15 (.006) |
| | Stem to guide clearance mm (in.) (24 valve engine) | Intake | 0.02–0.05 (.0008–.0020) | 0.10 (.004) |
| | | Exhaust | 0.04–0.07 (.0016–.0028) | 0.15 (.006) |
| Valve face angle | | | 45°–45.5° | – |

**TSB Revision**

| Items | | Standard value | Limit |
|---|---|---|---|
| **Cylinder head and valve** | | | |
| Valve spring | Free height mm (in.) (12 valve engine) | 49.8 (1.96) | 48.8 (1.92) |
| | Free height mm (in.) (24 valve engine) | 51.0 (2.01) | 50.0 (1.97) |
| | Load/installed height N/mm (lbs./in.) (12 valve engine) | 329/40.4 (72.5/1.591) | – |
| | Load/installed height N/mm (lbs./in.) (24 valve engine) | 267/44.2 (60/1.740) | – |
| | Out of squareness | 2° or less | Max. 4° |
| Valve seat | Valve contact width mm (in.) | 0.9–1.3 (.035–.051) | – |
| Valve guide | Inner diameter mm (in.) (12 valve engine) | 8.0 (.315) | – |
| | Inner diameter mm (in.) (24 valve engine) | 6.0 (.315) | – |
| | Outer diameter mm (in.) (12 valve engine) | 13.1 (.516) | – |
| | Outer diameter mm (in.) (24 valve engine) | 11.0 (.433) | – |
| **Front case, oil pump and oil pan** | | | |
| Oil pump | Tip clearance mm (in.) | 0.06–0.18 (.0024–.0071) | – |
| | Side clearance mm (in.) | 0.04–0.10 (.0016–.0039) | – |
| | Body clearance mm (in.) | 0.10–0.18 (.0039–.0071) | 0.35 (.0138) |
| Oil cooler by-pass valve | Dimension (L) [Normal temperature] mm (in.) | 34.5 (1.36) | – |
| | By-pass hole closing temperature [97–103°C (207–217°F) or more] mm (in.) | 40 (1.57) or more | – |
| | Oil pressure at curb idle speed kPa (psi) [Conditions: oil temperature is 75–90°C (167–194°F)] | 80 (11.4) or more | – |

| Items | | Standard value | Limit |
|---|---|---|---|
| **Piston and connecting rod** | | | |
| Piston | Outer diameter mm (in.) | 91.1 (3.58) | – |
| Piston ring | Ring to ring groove clearance No. 1 ring mm (in.) | 0.03–0.07 (.0012–.0028) | 0.1 (.004) |
| | Ring to ring groove clearance No. 2 ring mm (in.) | 0.02–0.06 (.0008–.0024) | 0.1 (.004) |
| | End gap No. 1 ring mm (in.) | 0.30–0.45 (.0118–.0177) | 0.8 (.031) |
| | End gap No. 2 ring mm (in.) | 0.45–0.60 (.0177–.0236) | 0.8 (.031) |
| | End gap oil ring mm (in.) | 0.20–0.60 (.0079–.0236) | 1.0 (.039) |
| Piston pin | Outer diameter mm (in.) | 22.0 (.87) | – |
| | Press-in load N (lbs.) | 7,350–17,200 (1,652–3,867) | – |
| | Press-in temperature | Room temperature | – |
| Crankshaft | Oil clearance of pin mm (in.) | 0.02–0.05 (.0008–.0020) | 0.1 (.004) |
| Connecting rod | Big end side clearance mm (in.) | 0.10–0.25 (.0039–.0098) | 0.4 (.016) |
| **Crankshaft, flywheel and drive plate** | | | |
| Crankshaft | End play mm (in.) | 0.05–0.25 (.0020–.0098) | 0.3 (.012) |
| | Journal outer diameter mm (in.) | 60 (2.36) | – |
| | Pin outer diameter mm (in.) | 50 (1.97) | – |
| | Oil clearance of journal mm (in.) | 0.02–0.04 (.0008–.0020) | 0.1 (.0039) |
| Piston | Piston to cylinder clearance mm (in.) | 0.02–0.04 (.0008–.0020) | – |
| Cylinder block | Flatness of gasket surface mm (in.) | 0.05 (.002) | 0.1 (.004) |
| | Grinding limit of gasket surface *Includes/combined with cylinder block grinding mm (in.) | – | *0.2 (.008) |
| | Overall height mm (in.) | 210.4–210.6 (8.28–8.29) | – |
| | Cylinder bore inner diamete mm (in.) | 91.1 (3.59) | – |

**TSB Revision**

## REWORK DIMENSIONS

| Items | | | Standard value | Limit |
|---|---|---|---|---|
| **Cylinder head and valve** | | | | |
| Cylinder head | Oversize valve guide hole (both intake and exhaust) (12 valve engine) mm (in.) | 0.05 | 13.05–13.07 (.5138–.5147) | – |
| | | 0.25 | 13.25–13.27 (.5217–.5224) | – |
| | | 0.50 | 13.50–13.52 (.5315–.5323) | – |
| | Oversize valve guide hole (both intake and exhaust) (24 valve engine) mm (in.) | 0.05 | 11.05–11.07 (.4350–.4358) | – |
| | | 0.25 | 11.25–13.32 (.4429–.4457) | – |
| | | 0.50 | 11.50–11.52 (.4528–.4535) | – |
| | Oversize intake valve seat ring hole (12 valve engine) mm (in.) | 0.3 | 44.30–44.33 (1.7441–1.7453) | – |
| | | 0.6 | 44.60–44.63 (1.7559–1.7571) | – |
| | Oversize intake valve seat ring hole (24 valve engine) mm (in.) | 0.3 | 34.30–34.33 (1.3504–1.3516) | – |
| | | 0.6 | 34.60–34.63 (1.3622–1.3634) | – |
| | Oversize exhaust valve seat ring hole (12 valve engine) mm (in.) | 0.3 | 38.30–38.33 (1.5079–1.5091) | – |
| | | 0.6 | 38.60–38.63 (1.5197–1.5209) | – |
| | Oversize exhaust valve seat ring hole (24 valve engine) mm (in.) | 0.3 | 31.80–32.83 (1.2520–1.2531) | – |
| | | 0.6 | 32.10–32.13 (1.2638–1.2650) | – |
| **Crankshaft, flywheel and drive plate** | | | | |
| Crankshaft | Out of roundness and taper of journal and pin mm (in.) | | 0.005 (.0002) | – |

## TORQUE SPECIFICATIONS

| Items | | Nm | ft.lbs. |
|---|---|---|---|
| **Generator and drive belt** | | | |
| Cooling fan bolt | | 11 | 8 |
| Fan pulley bolt | | 11 | 8 |
| Cooling fan bracket bolt | | 41 | 30 |
| Oil filler bolt <24 valve engine> | | 21 | 15 |
| Tensioner pulley nut <24 valve engine> | | 50 | 36 |
| Tensioner pulley nut <12 valve engine> | | 45 | 33 |
| Tensioner bracket bolt <12 valve engine> | M10 | 24 | 17 |
| | M12 | 42 | 30 |
| Idler pulley bolt <12 valve engine> | | 45 | 33 |
| Timing indicator bolt | | 11 | 8 |
| Tensioner bracket stay bolt | | 24 | 17 |
| Generator pivot nut <12 valve engine> | | 23 | 17 |
| Generator brace bolt <12 valve engine> | Side bolt | 10 | 7 |
| | Exhaust manifold tightening side bolt | 13 | 9 |
| Generator bolt <24 valve engine> | M8 | 21 | 15 |
| | M10 | 51 | 38 |
| Accessory mount bolt | | 44 | 32 |
| Accessory mount stay bolt | M8 | 23 | 17 |
| | M10 | 49 | 36 |
| Crankshaft bolt <12 valve engine> | | 185 | 136 |
| Crankshaft bolt <24 valve engine> | | 182 | 134 |
| **Intake manifold plenum and throttle body** | | | |
| Manifold differential pressure sensor bolt | | 4.9 | 3.6 |
| Intake manifold plenum bolt and nut | | 18 | 13 |
| Ignition coil bolt <24 valve engine> | | 13 | 10 |
| Vacuum hose assembly bolt <24 valve engine> | | 9.8 | 7 |
| Water outlet fiting bracket bolt | | 19 | 14 |
| EGR pipe bolt | | 18 | 13 |
| EGR pipe flare nut | | 59 | 43 |
| Intake manifold plenum stay bolt | M8 | 18 | 13 |
| | M10 | 36 | 27 |
| EGR valve bolt | | 22 | 16 |
| Bracket bolt | | 24 | 18 |
| Throttle body bolt <24 valve engine> | | 12 | 8 |
| Throttle body bolt <12 valve engine> | | 14 | 10 |

| Items | Nm | ft.lbs. |
|---|---|---|
| **Ignition system** | | |
| Spark plug | 25 | 18 |
| Distributor nut | 14 | 10 |
| Ignition coil bolt <12 valve engine> | 25 | 18 |
| **Timing belt** | | |
| Crankshaft/camshaft position sensor bolt | 9 | 7 |
| Tensioner lock bolt | 26 | 19 |
| Auto tensioner bolt | 24 | 17 |
| Tensioner pulley bolt | 49 | 35 |
| Tensioner arm bolt <24 valve engine> | 44 | 33 |
| Idler pulley bolt | 44 | 33 |
| Camshaft sprocket bolt <12 valve engine> | 90 | 66 |
| Camshaft sprocket bolt <24 valve engine> | 88 | 64 |
| Generator stay bolt | 25 | 18 |
| Generator bracket bolt | 25 | 18 |
| **Intake manifold and fuel parts** | | |
| Injector and fuel rail bolt | 12 | 9 |
| Fuel pressure regulator bolt | 9 | 7 |
| Fuel pipe bolt | 9 | 7 |
| Heat pipe bolt | 12 | 9 |
| Engine coolant temperature gauge unit | 11 | 8 |
| Engine coolant temperature sensor | 30 | 22 |
| Water outlet fitting bolt | 19 | 14 |
| Water inlet fitting bolt | 19 | 14 |
| Thermostat case bolt | 19 | 14 |
| Water passage bolt | 19 | 14 |
| Water (outlet) pipe bolt | 14 | 10 |
| Intake manifold nut <12 valve engine> | 14 | 10 |
| Intake manifold nut <24 valve engine> | 21 | 16 |
| **Exhaust manifold** | | |
| Oil level gauge guide bolt | 14 | 10 |
| Heat protector bolt | 14 | 10 |
| Engine hanger bolt <12 valve engine> | 19 | 14 |
| Exhaust manifold nut <12 valve engine> | 19 | 14 |
| Exhaust manifold nut <24 valve engine> | 29 | 22 |
| Heater pipe bolt | 12 | 9 |
| Water pipe bolt | 14 | 10 |
| Water inlet pipe bolt | 12 | 9 |
| Water pump bolt | 24 | 17 |

| Items | | Nm | ft.lbs. |
|---|---|---|---|
| **Rocker arms and camshafts** | | | |
| Oil filler bolt <12 valve engine> | | 9 | 7 |
| Rocker cover bolt <12 valve engine> | | 9 | 7 |
| Rocker cover bolt <24 valve engine> | | 3.5 | 2.5 |
| Distributor adaptor bolt | | 13 | 9 |
| Thrust case bolt | | 13 | 9 |
| Rocker arm, rocker arm shaft bolt <12 valve engine> | | 20 | 14 |
| Rocker arm, rocker arm shaft bolt <24 valve engine> | | 31 | 23 |
| **Cylinder head and valve** | | | |
| Cylinder head bolt | | 108 | 80 |
| **Oil pan and oil pump** | | | |
| Oil pressure switch | | 10 | 7 |
| Oil pressure gauge unit <24 valve engine> | | 10 | 7 |
| Oil pressure gauge unit <12 valve engine> | | 55 | 40 |
| Oil cooler by-pass valve | | 55 | 40 |
| Oil filter bracket bolt <12 valve engine> | mark 4 | 24 | 17 |
| | mark 7 | 14 | 10 |
| Oil filter bracket bolt <24 valve engine> | M8 | 24 | 17 |
| | M10 | 40 | 30 |
| Drain plug | | 40 | 30 |
| Oil pan (upper) bolt | | 6 | 4 |
| Oil pan lower bolt | | 11 | 8 |
| Cover bolt | | 11 | 8 |
| Baffle plate bolt | | 11 | 8 |
| Oil screen bolt | M6 | 9 | 7 |
| | M8 | 19 | 14 |
| Plug | | 45 | 33 |
| Oil pump case bolt | | 14 | 10 |
| Oil pump cover bolt | | 10 | 7 |
| **Piston and connecting rod** | | | |
| Connecting rod cap nut | | 52 | 38 |
| **Crankshaft, flywheel and drive plate** | | | |
| Flywheel bolt | | 75 | 54 |
| Drive plate bolt | | 75 | 54 |
| Rear plate bolt | | 11 | 8 |
| Bell housing cover bolt | | 9 | 7 |
| Oil seal case bolt | | 11 | 8 |
| Bearing cap bolt <12 valve engine> | | 79 | 57 |
| Bearing cap bolt <24 valve engine> | | 93 | 67 |
| **Bracket** | | | |
| Bracket bolt | M8 | 22 | 16 |
| | M10 | 41 | 30 |
| | M12 | 75 | 54 |

**TSB Revision**

## SEALANT

11300050139

| Items | Specified sealant | Quantity |
|---|---|---|
| Engine coolant temperature sensor | 3M NUT Locking Part No. 4171 | As required |
| Engine coolant temperature gauge unit | 3M ATD Part No. 8660 | As required |
| Rocker cover | 3M ATD Part No. 8660 | As required |
| Bearing cap | 3M NUT Locking Part No. 4171 | As required |
| Oil pressure switch | 3M ATD Part No. 8660 | As required |
| Oil pressure gauge unit | 3M ATD Part No. 8660 | As required |
| Oil pump case | Mitsubishi Genuine Part No. MD970389 | As required |
| Oil pan | Mitsubishi Genuine Part No. MD970389 | As required |
| Oil seal case | Mitsubishi Genuine Part No. MD970389 | As required |

# SPECIAL TOOLS

11300060149

| Tool | Tool number and name | Supersession | Application |
|---|---|---|---|
| 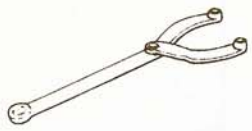 | MB990767<br>End yoke holder<br><br>Use with<br>MD998715 | MB990767-01<br><br>Use with MIT308239 | Holding camshaft sprocket when loosening bolt. |
|  | MB991559<br><br>Camshaft oil seal installer adaptor | – | Installation of camshaft oil seal<br>For 24 valve engine only<br>(Left bank)<br>(Use with MD998713) |
| 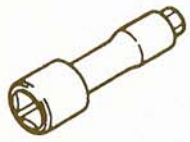 | MD998051<br><br>Cylinder head bolt wrench | MD998051-01 | Loosening and tightening cylinder head bolts |
| 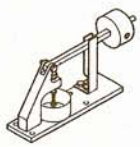 | MD998440<br><br>Leak-down tester | – | Leak-down test of lash adjuster |
|  | MD998441<br><br>Lash adjuster retainer | – | Bleeding of air inside adjuster |
| 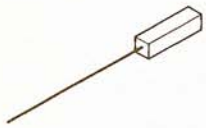 | MD998442<br><br>Air bleed wire | – | Air bleeding of auto lash adjuster |
|  | MD998443<br><br>Lash adjuster holder (8) | MD998443-01 | Supporting lash adjuster to prevent it from falling when rocker shaft assembly is removed or installed |
| 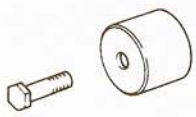 | MD998713<br><br>Camshaft oil seal installer | MD998713-01 | Installation of camshaft oil seal<br>For 12 valve engine only |
| 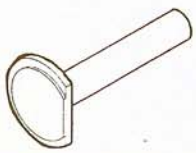 | MD998714<br><br>Circular packing installer | MD998714-01<br>MB990938-01 | Installation of circular packing<br>For 12 valve engine only |

**TSB Revision**

| Tool | Tool number and name | Supersession | Application |
|---|---|---|---|
|  | MD998716<br>Crankshaft wrench | MD998716-01 | Rotation of crankshaft when installing piston and timing belt<br>For 12 valve engine only |
| 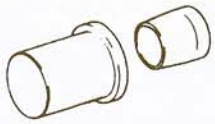 | MD998717<br>Crankshaft front oil seal installer | MD998717-01 | Installation of crankshaft front oil seal |
|  | MD998718<br>Crankshaft rear oil seal installer | MD998718-01<br>Use with MB990938-01 | Installation of crankshaft rear oil seal |
|  | MD998715<br>Pulley holding pins (2) | MIT308239 | Holding camshaft sprocket when loosening or torquing bolt |
|  | MD998727<br>Oil pan remover | – | Removal of oil pan |
| 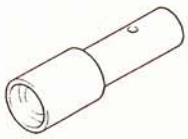 | MD998729<br>Valve stem seal installer | MD998729-01 | Installation of valve stem seal<br>For 12 valve engine only |
|  | MD998735<br>Valve spring compressor | MD998735-01 | Removal and installation of valve and related parts |
| 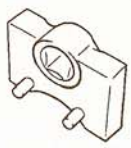 | MD998767<br>Tension pulley wrench | MD998752-01 | Adjustment of timing belt tension<br>For 24 valve engine only |
|  | MD998769<br>Crankshaft spacer | – | Rotation of crankshaft when installing piston and timing belt<br>For 24 valve engine only |

| Tool | Tool number and name | Supersession | Application |
|---|---|---|---|
|  | MD998772<br>Valve spring compressor | General service tool | Compression of valve spring |
|  | MD998774<br>Valve stem seal installer | – | Installation of valve stem seal<br>For 24 valve engine only |
| 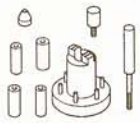 | MD998780<br>Piston pin setting tool | MIT216941 | Removal and installation of piston pin |
| 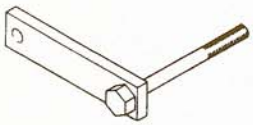 | MD998781<br>Flywheel stopper | – | Loosening and tightening crankshaft bolts |

# GENERATOR AND DRIVE BELT

11300130079

## REMOVAL AND INSTALLATION <12 VALVE ENGINE>

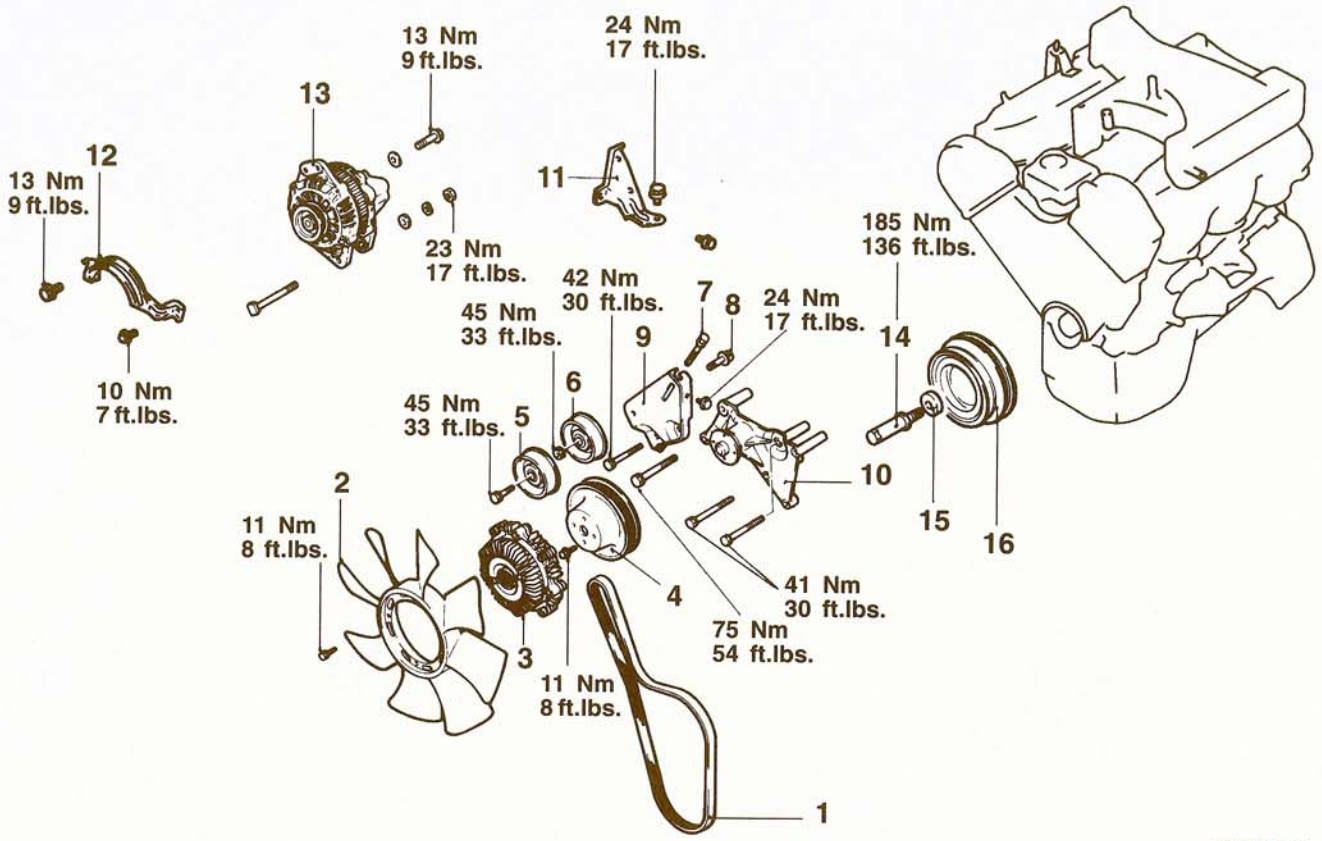


Z7EN0488

**Removal steps**

▶B◀ 1. Drive belt
2. Cooling fan
3. Fan clutch
4. Fan pulley
5. Idler pulley
6. Tensioner pulley
7. Adjusting bolt
8. Adjusting stud
9. Tensioner bracket
10. Cooling fan bracket assembly
11. Tensioner bracket stay
12. Generator brace
13. Generator

◀A▶ ▶A◀ 14. Crankshaft bolt
15. Special washer
16. Crankshaft pulley

TSB Revision

## REMOVAL AND INSTALLATION <24 VALVE ENGINE>

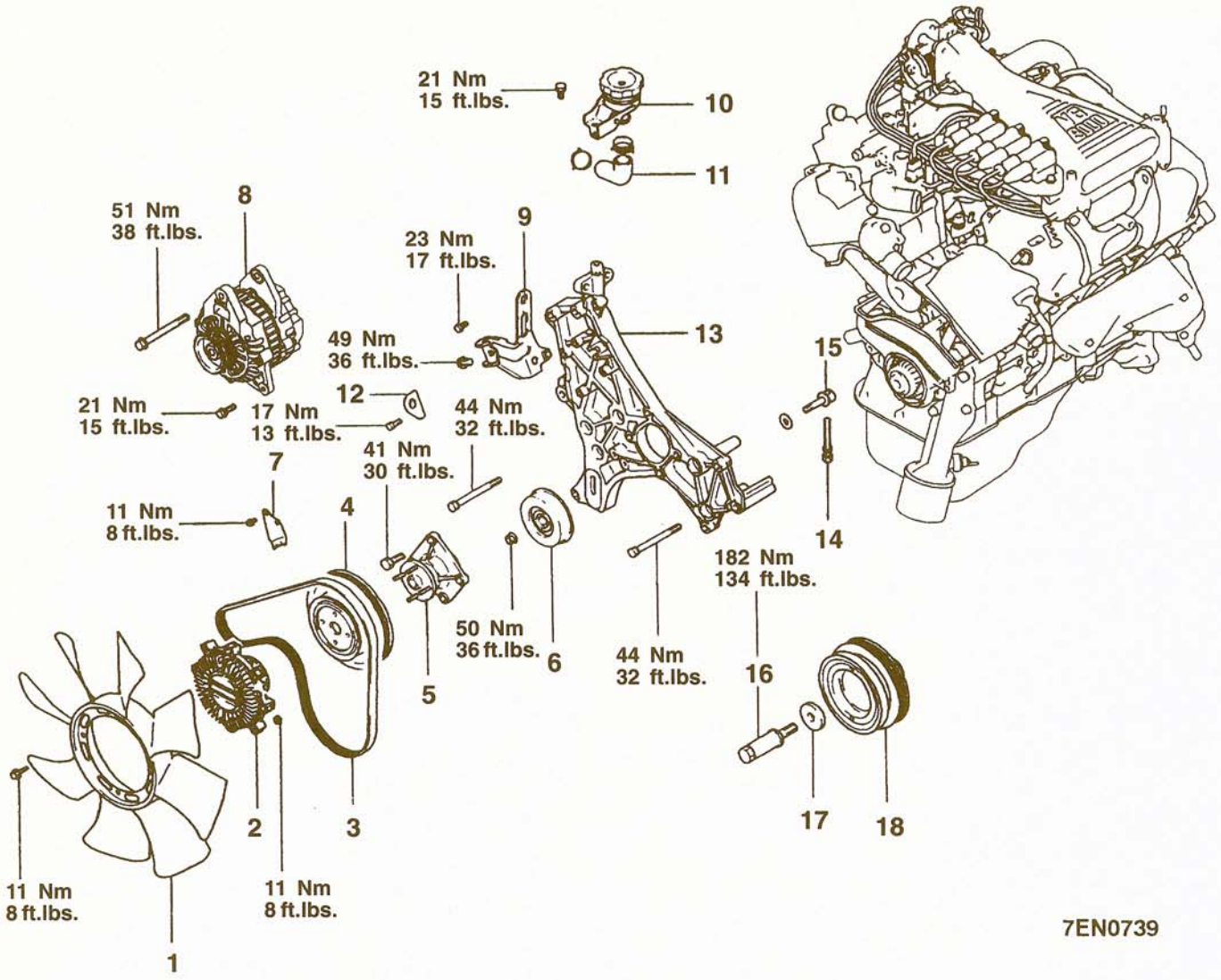


**Removal steps**

1. Cooling fan
2. Fan clutch
▶B◀ 3. Drive belt
4. Cooling fan pulley
5. Cooling fan bracket
6. Drive belt tensioner pulley
7. Timing indicator
8. Generator
9. Accessory mount stay
10. Oil filler
11. Tube
12. Engine hanger
13. Accessory mount
14. Adjusting bolt
15. Adjusting stud
◀A▶ ▶A◀ 16. Crankshaft bolt
17. Crankshaft pulley washer
18. Damper pulley

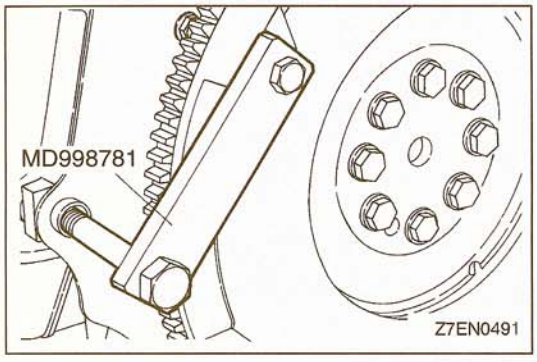


## REMOVAL SERVICE POINT

### ◀A▶ CRANKSHAFT BOLT LOOSENING

(1) Using the special tool, hold the drive plate or flywheel.
(2) Remove the crankshaft bolt.

TSB Revision

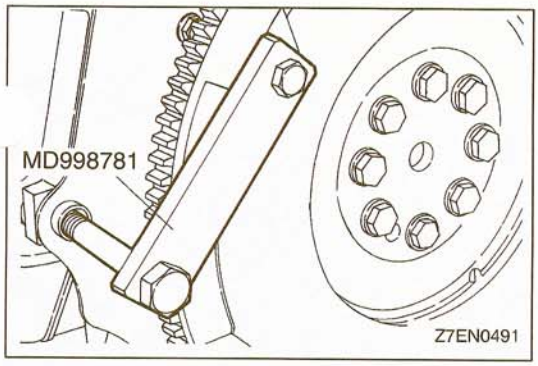


## INSTALLATION SERVICE POINT

### ▶A◀ CRANKSHAFT BOLT TIGHTENING

(1) Using the special tool, hold the drive plate or flywheel.
(2) Install the crankshaft bolt.

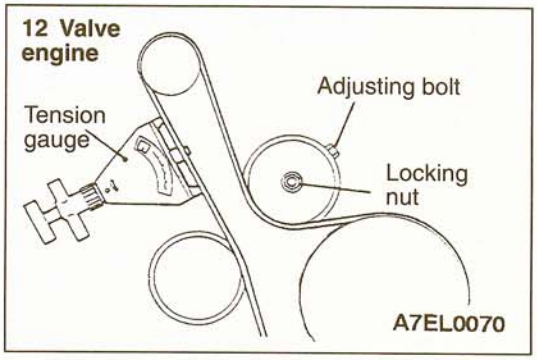


### ▶B◀ DRIVE BELT TENSION ADJUSTMENT

(1) Use a belt tension gauge to check belt tension, or check deflection by applying 98 N (22 lbs.) to the shown point.

**Standard value:**

| Generator drive belt | | Tension N (lbs.) |
|---|---|---|
| 12 Valve engine | New | 500 – 700 (110 – 154) |
| | Used | 400 (88) |
| 24 Valve engine | New | 637 – 833 (141 – 184) |
| | Used | 441 – 539 (98 – 119) |

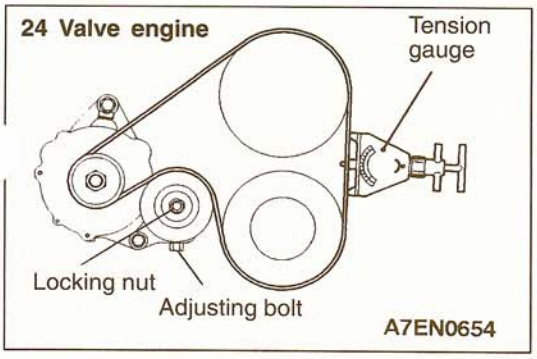


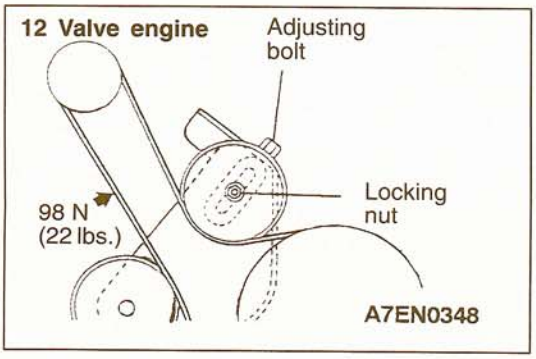


**Standard value:**

| Generator drive belt | | | Deflection (Reference value) mm (in.) |
|---|---|---|---|
| 12 Valve engine | | New | 6.5 – 8.0 (.26 – .32) |
| | | Used | 9.0 (.35) |
| 24 Valve engine | A | New | 4.0 – 5.0 (.16 – .20) |
| | | Used | 5.5 – 6.5 (.22 – .26) |
| | B | New | 5.5 – 7.5 (.22 – .30) |
| | | Used | 8.0 – 9.0 (.31 – .35) |

**A: Between cooling fan pulley and crankshaft pulley**
**B: Between cooling fan pulley and generator**

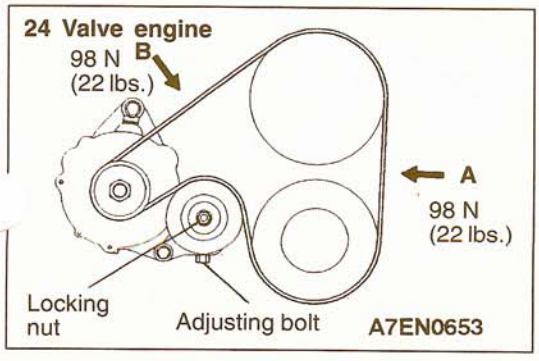

# INTAKE MANIFOLD PLENUM AND THROTTLE BODY

11300330066

## REMOVAL AND INSTALLATION <12 VALVE ENGINE>

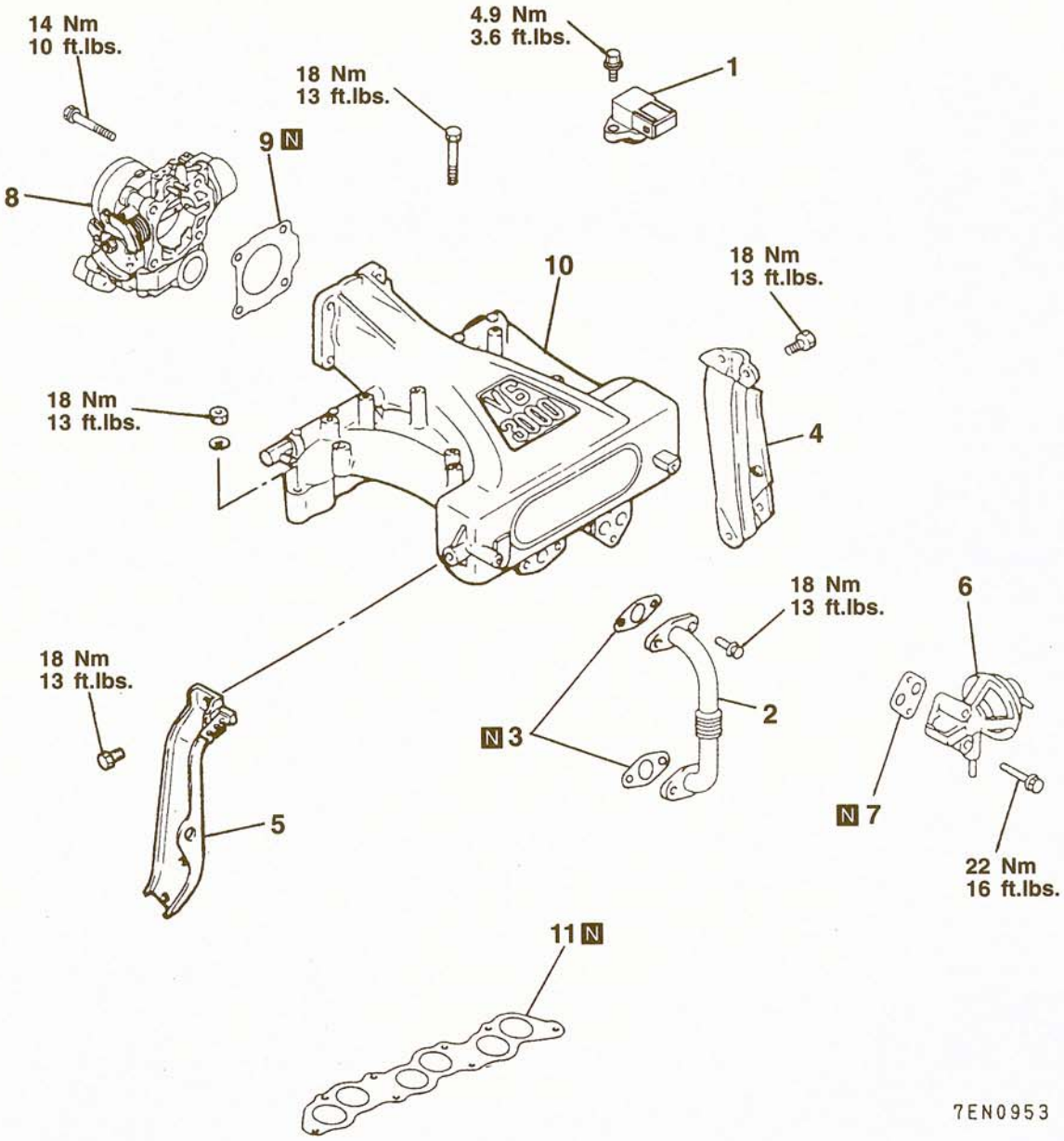


**Removal steps**

1. Manifold differential pressure sensor
2. EGR pipe
3. EGR pipe gasket
4. Intake manifold plenum stay, rear
5. Intake manifold plenum stay, front
6. EGR valve
7. EGR valve gasket
8. Throttle body
9. Throttle body gasket
10. Intake manifold plenum
11. Intake manifold plenum gasket

TSB Revision

## REMOVAL AND INSTALLATION <24 VALVE ENGINE>

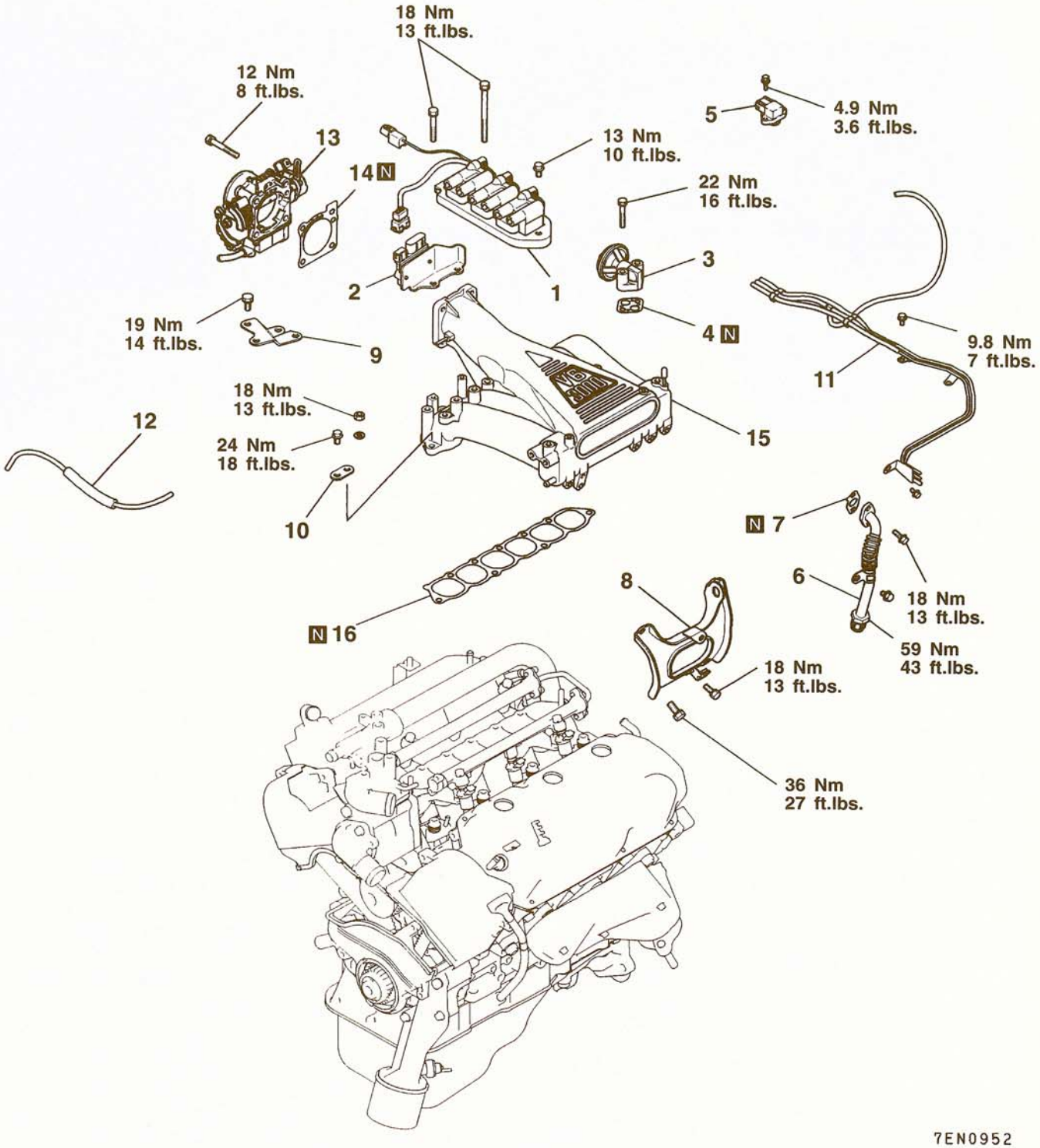


7EN0952

**Removal steps**

1. Ignition coil
2. Ignition power transistor
3. EGR valve <For Federal>
4. EGR valve gasket <For Federal>
5. Manifold differential pressure sensor <For Federal>
6. EGR pipe <For Federal>
7. EGR pipe gasket <For Federal>
8. Intake manifold plenum stay
9. Water outlet fittng bracket
10. Bracket
11. Vacuum hose assembly
12. Vacuum hose
13. Throttle body
14. Throttle body gasket
15. Intake manifold plenum
16. Intake manifold plenum gasket

**TSB Revision**

# IGNITION SYSTEM

11300160047

## REMOVAL AND INSTALLATION
## <12 VALVE ENGINE>

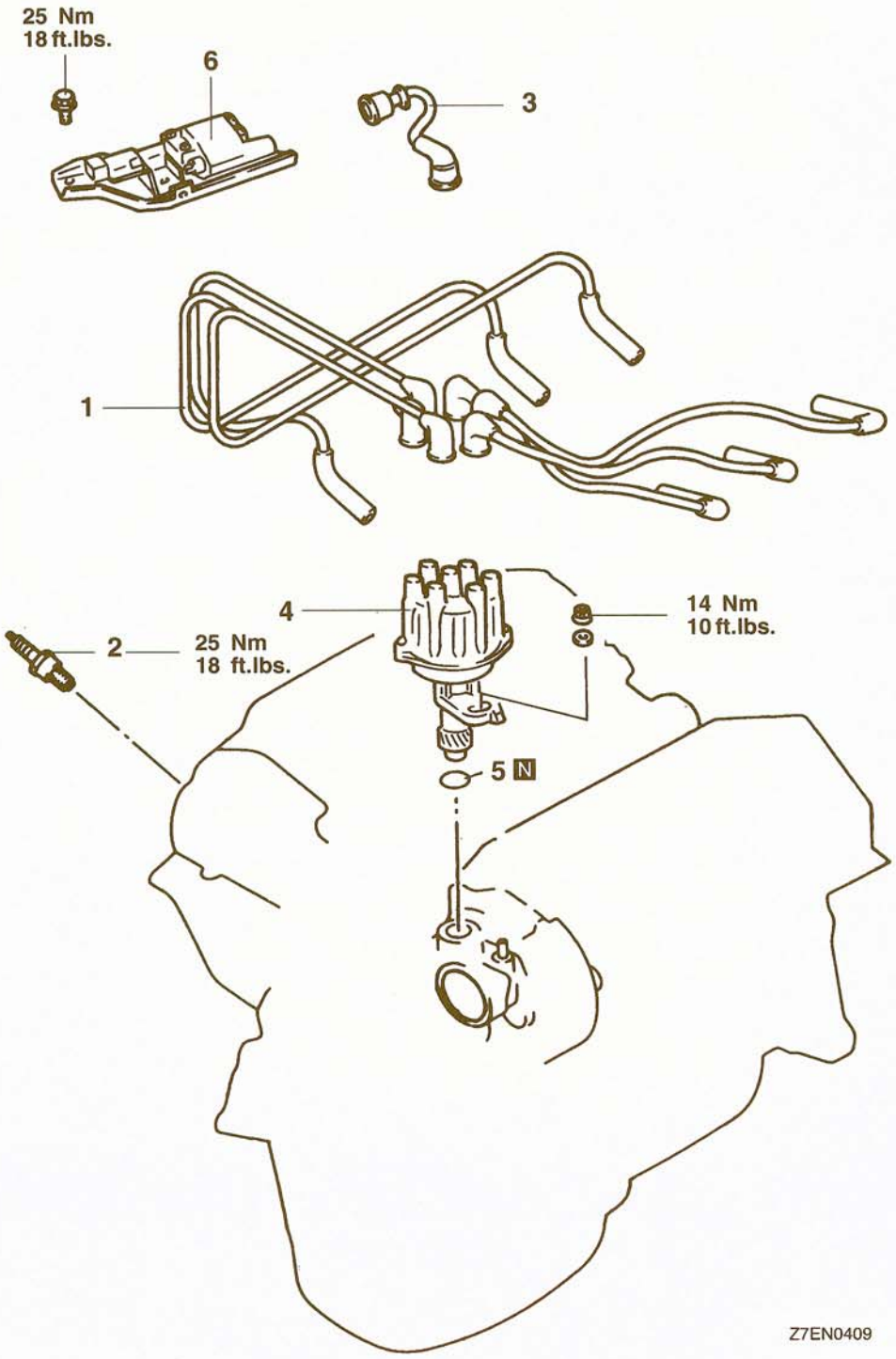


**Removal steps**

1. Spark plug cables
2. Spark plugs
3. High tension cable
▶A◀ 4. Distributor
5. O-ring
6. Ignition coil

**TSB Revision**

## REMOVAL AND INSTALLATION
## <24 VALVE ENGINE>

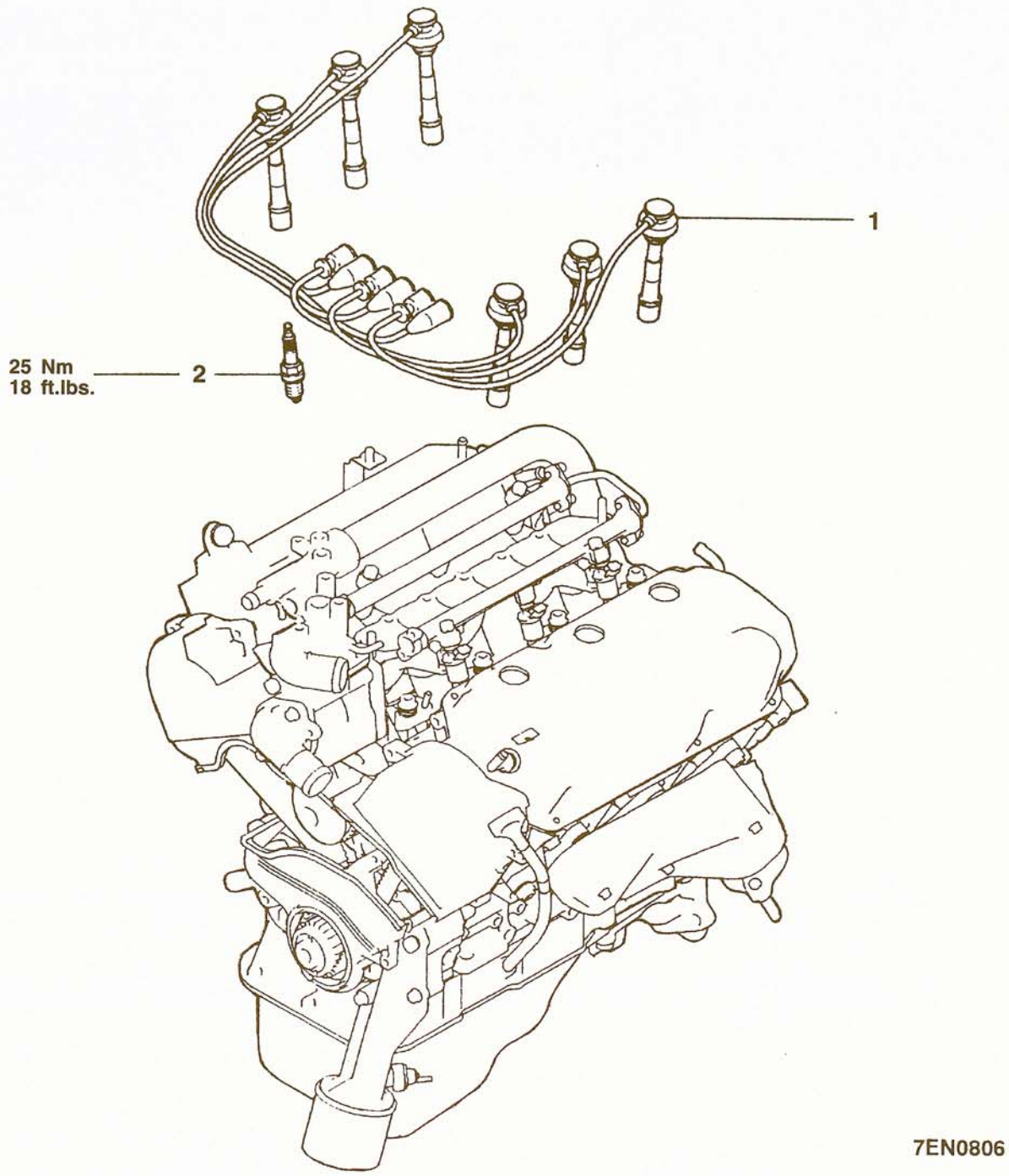


**Removal steps**

1. Spark plug cables
2. Spark plugs

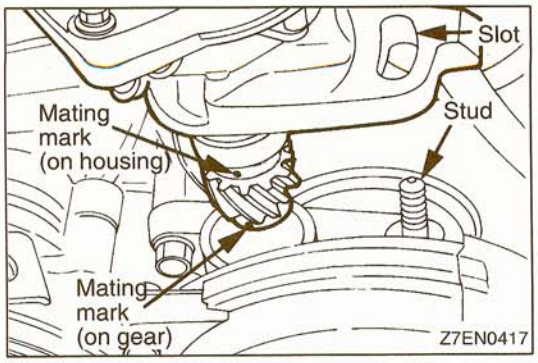


## INSTALLATION SERVICE POINT

### ▶A◀ DISTRIBUTOR INSTALLATION

**<12 VALVE ENGINE>**

(1) Turn the crankshaft so that the No. 1 cylinder is at compression top dead center.
(2) Align the distributor housing and gear mating marks.
(3) With the stud located in the center of the adjusting slot at the distributor, install the distributor.

# TIMING BELT

11300190152

## REMOVAL AND INSTALLATION <12 VALVE ENGINE>

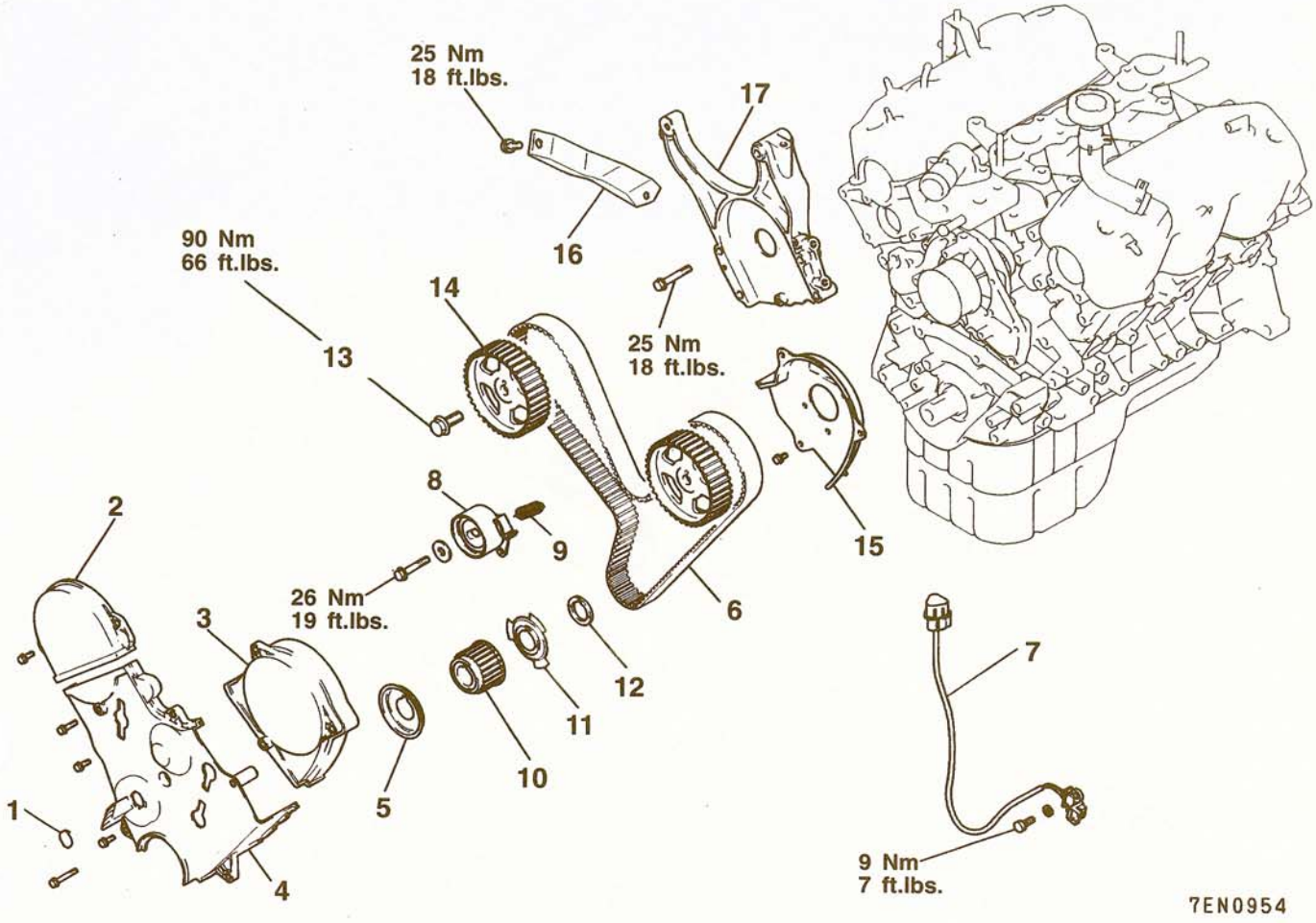


**Removal steps**

1. Access cover
2. Timing belt front upper cover, right
3. Timing belt front upper cover, left
4. Timing belt front lower cover
5. Flange
◀A▶ ▶D◀ 6. Timing belt
7. Crankshaft position sensor
▶B◀ 8. Timing belt tensioner
9. Tensioner spring
10. Crankshaft sprocket
11. Crankshaft sensing blade
12. Crankshaft spacer
◀B▶ ▶A◀ 13. Camshaft sprocket bolt
14. Camshaft sprocket
15. Timing belt rear upper cover, left
16. Generator stay
17. Generator bracket

TSB Revision

## REMOVAL AND INSTALLATION <24 VALVE ENGINE>

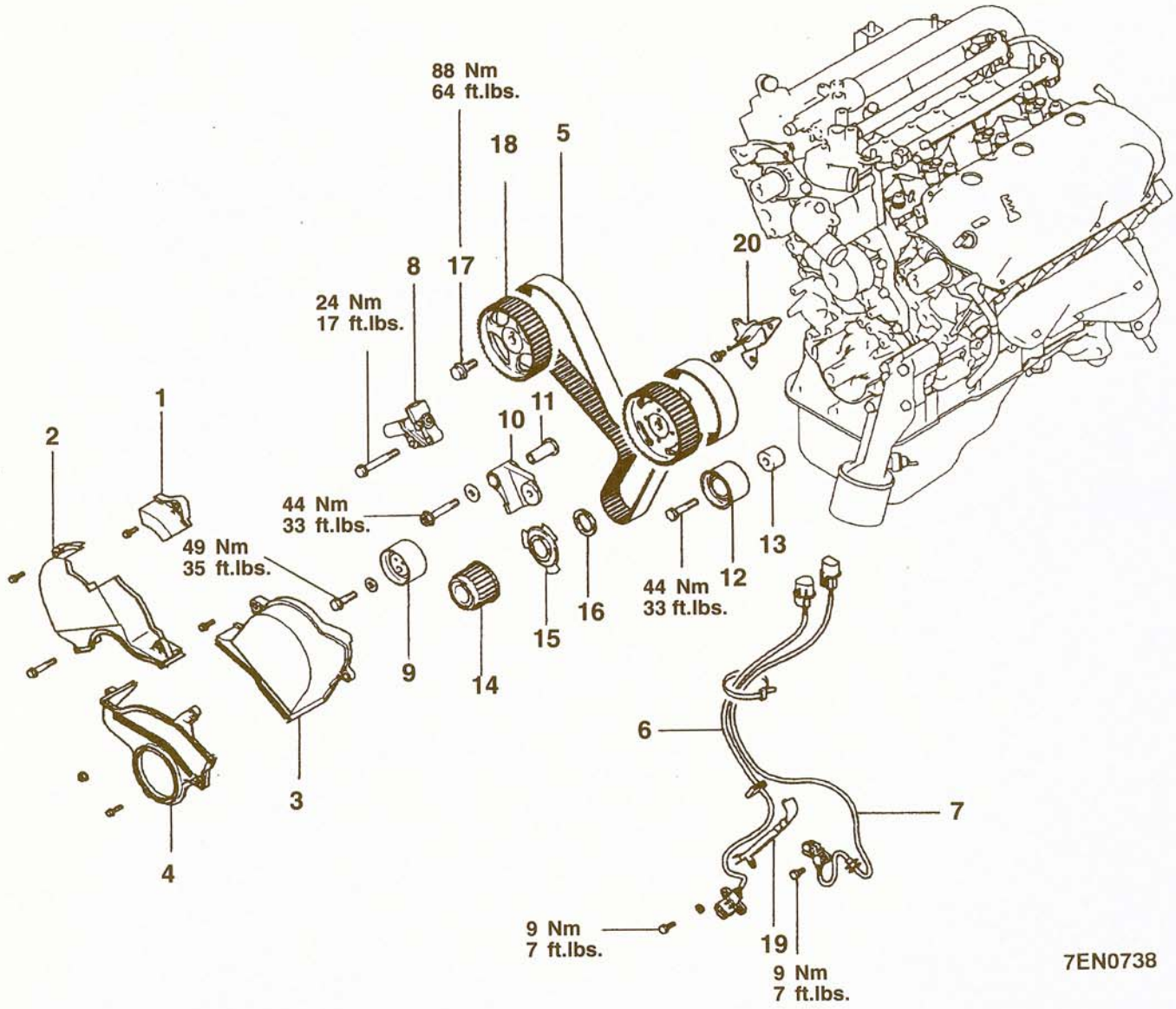


**Removal steps**

1. Timing belt cover cap
2. Timing belt front upper cover, right
3. Timing belt front upper cover, left
4. Timing belt front lower cover
◀A▶ ▶E◀ 5. Timing belt
6. Crankshaft position sensor
7. Camshaft position sensor
▶C◀ 8. Auto-tensioner
9. Tensioner pulley
10. Tensioner arm
11. Shaft
12. Idler pulley
13. Idler pulley spacer
14. Crankshaft sproket
15. Crankshaft sensing blade
16. Crankshaft spacer
◀B▶ ▶A◀ 17. Camshaft sproket bolt
18. Camshaft sproket
19. Harness protector
20. Timing belt rear cover

TSB Revision

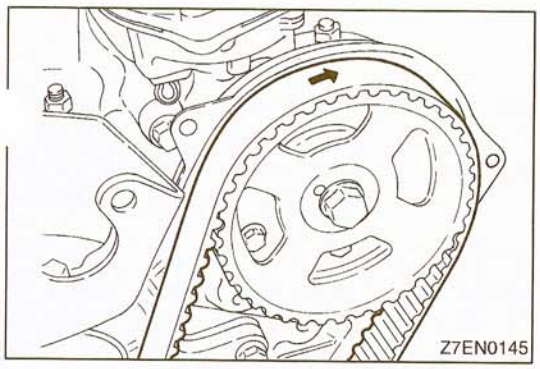


## REMOVAL SERVICE POINTS

### ◀A▶ TIMING BELT REMOVAL

(1) Mark the belt running direction for reference in reinstallation.

NOTE
(1) Water or oil on the belt shortens its life drastically, so the removed timing belt, sprocket, and tensioner must be kept free from oil and water. Do not immerse parts in cleaning solvent.
(2) If there is oil or water on any part, check the front case oil seal, camshaft oil seal and water pump for leaks.

### ◀B▶ CAMSHAFT SPROCKET BOLT LOOSENING

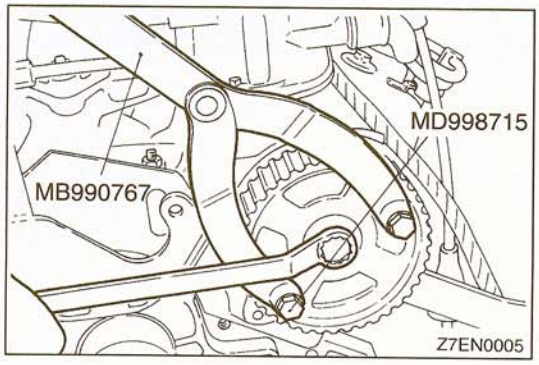


## INSTALLATION SERVICE POINTS

### ▶A◀ CAMSHAFT SPROCKET BOLT TIGHTENING

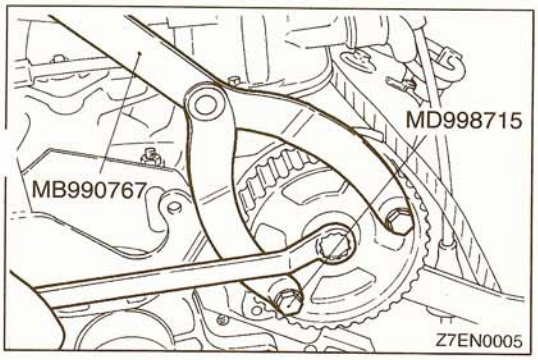


### ▶B◀ TIMING BELT TENSIONER INSTALLATION

(1) Insert a screwdriver into the hole of the timing belt tensioner arm, move it all the way in the direction of the arrow, and tighten the tensioner lock bolt to temporarily hold this position.

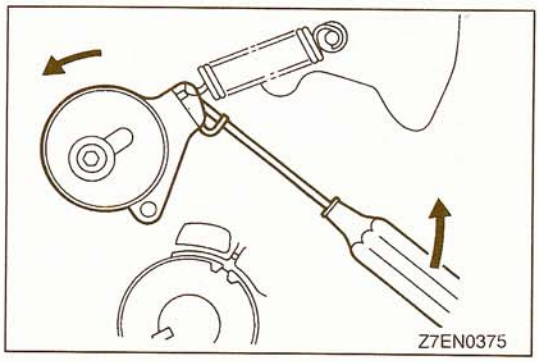


### ▶C◀ AUTO-TENSIONER INSTALLATION

If the auto-tensioner rod is fully extended, set it in the retracted position with the following procedure.
(1) Set the auto-tensioner in a vice.

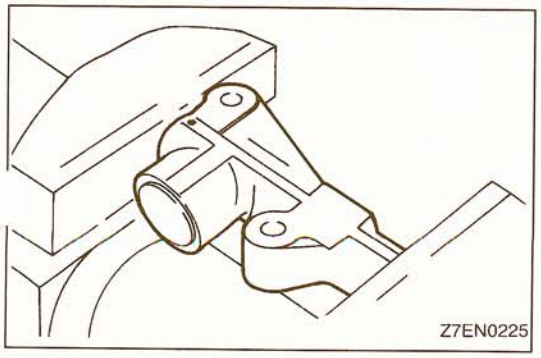

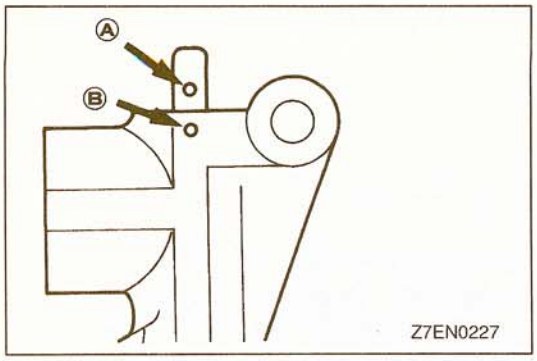


(2) Slowly close the vice to force the rod in until the set hole (A) of the rod is lined up with the set hole (B) of the cylinder.
(3) Insert a wire [1.4 mm (.055 in.) in diameter] into the s holes.
(4) Remove the auto-tensioner from the vice.

**Specified sealant: 3M ATD Part No.8660 or equivalent.**

### ▶D◀ TIMING BELT INSTALLATION

(1) Align the timing marks of the camshaft sprockets and the crankshaft sprocket.
(2) Install the timing belt on the crankshaft sprocket first and while keeping the belt tight on the tension side, install the belt on the left camshaft sprocket.
(3) Then, install on the water pump pulley and on the right camshaft sprocket and finally on the timing belt tensioner.

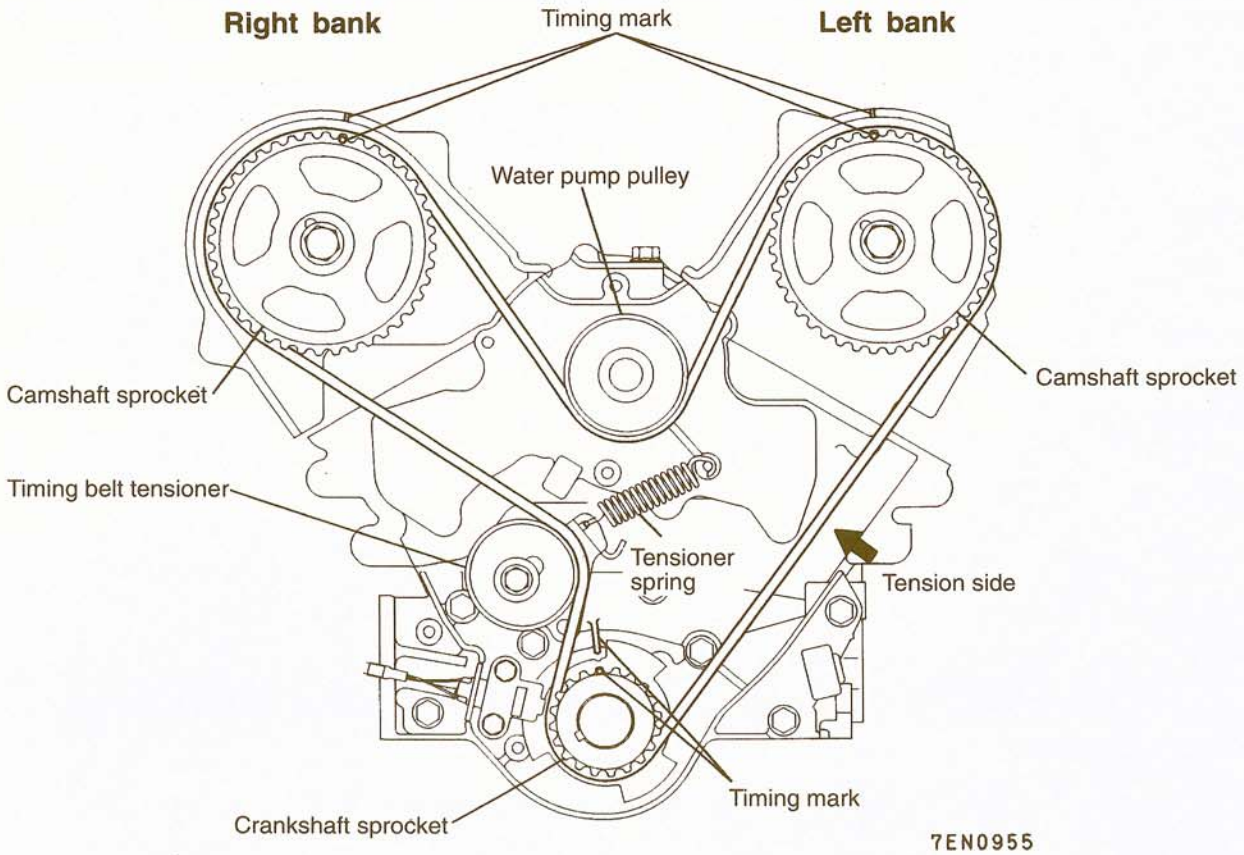

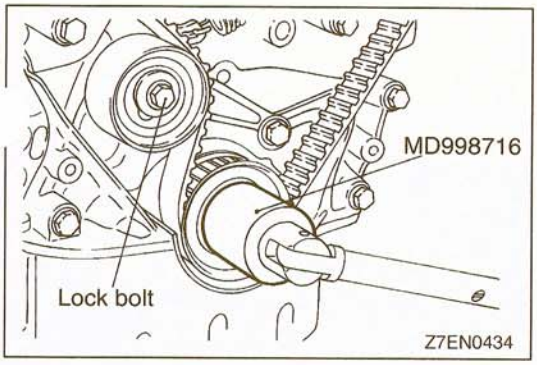


(4) Install the flange onto the front end of the crankshaft.
(5) Install the special tool onto the crankshaft.
(6) Loosen the tensioner lock bolt one or two turns and allow the spring to tension the timing belt.
(7) Turn the crankshaft two full turns clockwise. Turn smoothly and in clockwise direction only.
(8) Again line up the timing marks on the sprockets and tighten the tensioner lock bolt to the specified torque.

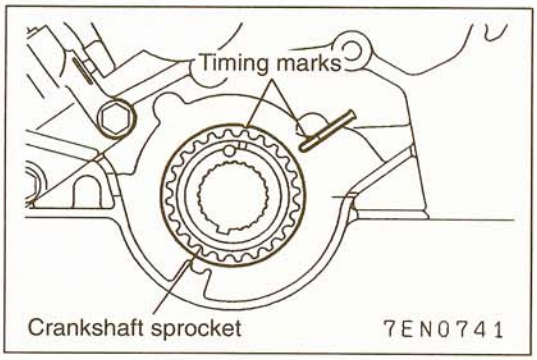


### ▶E◀ TIMING BELT INSTALLATION

(1) Move the timing mark of the crankshaft sprocket three teeth to slightly lower the piston below the top dead center on the compression stroke of the No. 1 cylinder.

**Caution**
**If the camshaft aprocket is rotated with the piston at the top dead center on the compression stroke of the No. 1 cyliner, the valve and piston might interfere.**

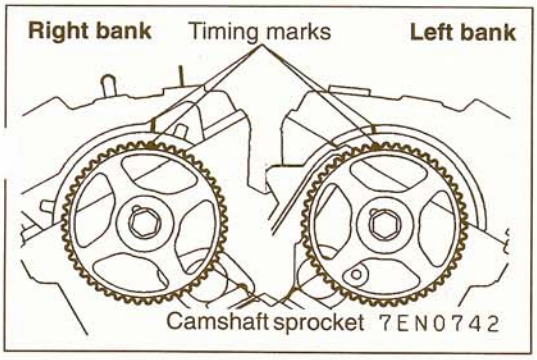


(2) Line up the timing marks of the left bank camshaft sprockets.
(3) Line up the timing marks of the right bank camshaft sprockets.

**Caution**
**Since the camshaft sprocket readily turns because of spring action, use care to make sure that your finger is not caught.**

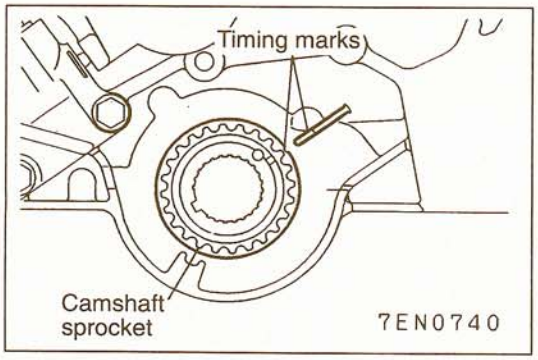


(4) Line up the timing marks of the crankshaft sprockets.
(5) Install the timing belt on each sprocket in the following sequence.
  (1) Install the timing belt on the crankshaft sprocket and then on the idler pulley, while tightening it to prevent slackness.
  (2) Install the timing belt on the left bank camshaft sprocket.
  (3) Install the timing belt on the water pump pulley, while taking up the slack.
  (4) Install the timing belt on the right bank camshaft sprocket.
  (5) Install the timing belt on the tensioner pulley.

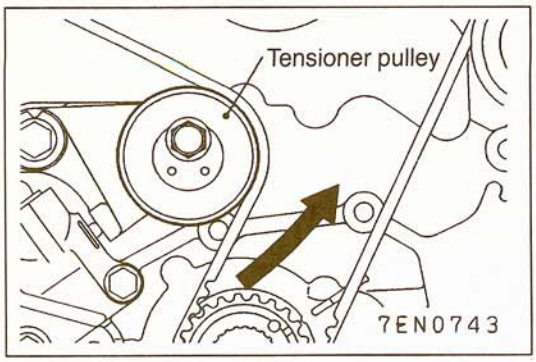


(6) Lightly press the tensioner pulley against the belt and temporatily tighten the center bolt.
(7) Check to see that the timing belts of all the sprockets are in a alignment.

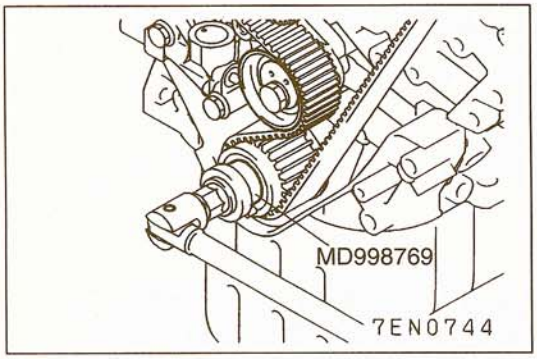


(8) Using a special tool, rotate the crankshaft a quarter of a turn counter-clockwise. Then rotate it back clokwise to verify that all the timing marks are in alignment.

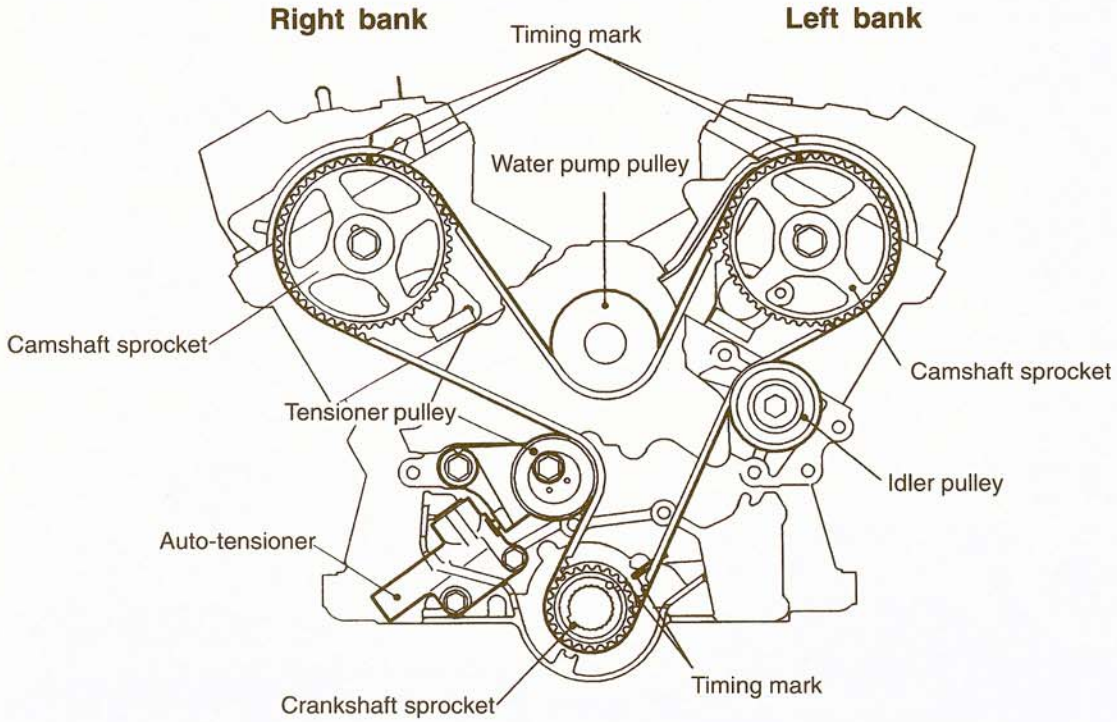


7EN0745

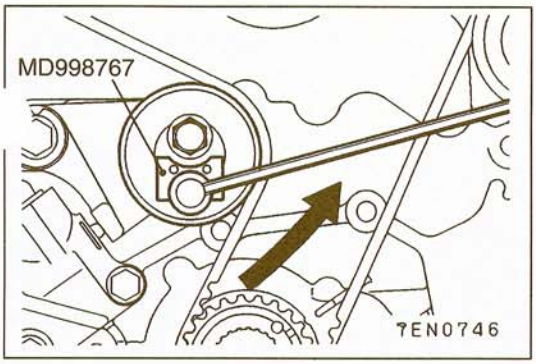


(9) Mount a special tool and torque wrench on the tensioner pulley.
(10) Torque it to 4.4 Nm (3.3 ft.lbs.) with the torque wrench.
(11) While holding the tensioner pulley in position, tighten the center bolt to the specified torque.
(12) Rotate the crankshaft two turns clockwise and leave it aline for approx. 5 minutes.

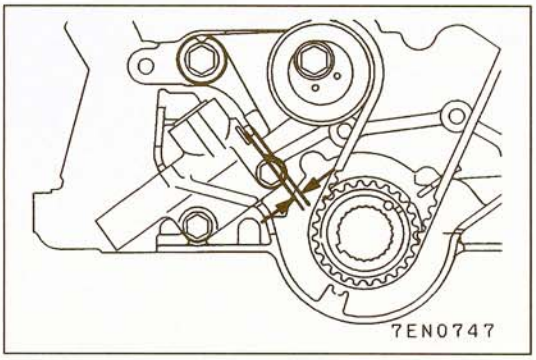


(13) Check to see whether the metal wire inserted when the auto-tensioner was installed can be removed without any resistance.
If the metal wire can be removed without any resistance, it means that the belt has a proper tension. Therefore, remove the metal wire. In this condition, check that the projection of the rod of the auto-tensioner is within the standard value.

**Standard value: 3.8 – 4.5 mm (.150 – .177 in.)**

(14) If the metal wire offers opposition when removed, repeat the foregoing steps (9) through (12) until a proper belt tension is obtained.

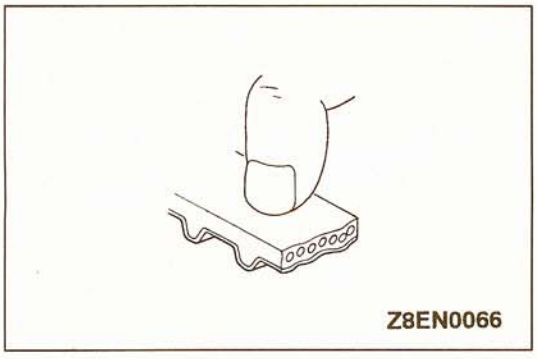


## INSPECTION

11300200121

### TIMING BELT

Replace belt if any of the following conditions exist.
(1) Hardening of back rubber–back side is glossy without resilience and leaves no indent when pressed with fingernail.

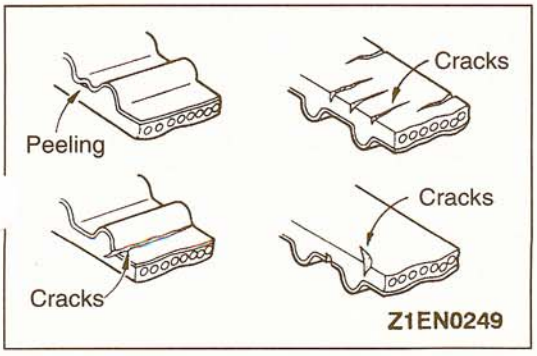


(2) Cracks on rubber back
(3) Cracks or peeling of canvas
(4) Cracks on tooth bottom
(5) Cracks on belt

TSB Revision

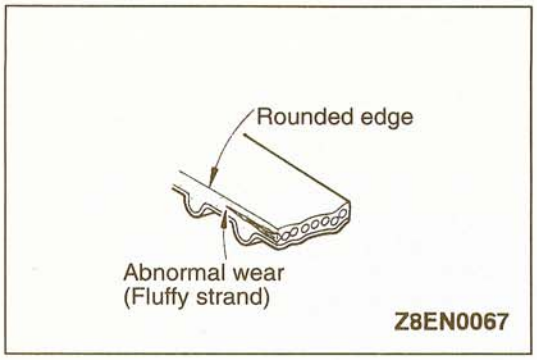


(6) Abnormal wear of belt sides. The sides are normal if they are sharp as if cut by a knife.

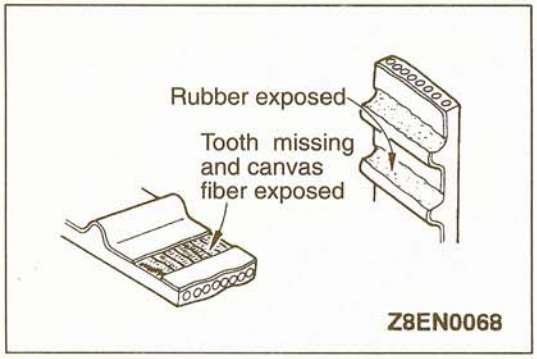


(7) Abnormal wear on teeth
(8) Tooth missing and canvas fiber exposed.

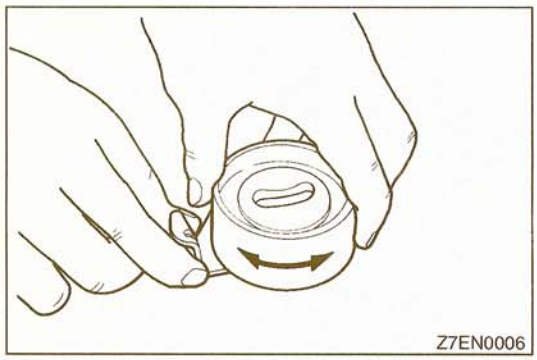


**TENSIONER**

(1) Turn the pulley. If it rotates unsmoothly, develops noise or excessive play, replace the timing belt tensioner.

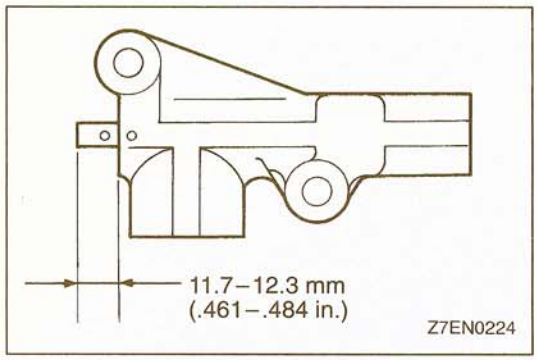


**AUTO-TENSIONER**

**<24 VALVE ENGINE>**

(1) Check for oil leaks. If oil leaks are evident, replace the auto-tensioner.
(2) Check the rod end for wear or damage and replace the auto-tensioner if necessary.
(3) Measure the rod projection length. If the reading is outside the standard value, replace the auto-tensioner.

**Standard value: 11.7–12.3 mm (.461–.484 in.)**

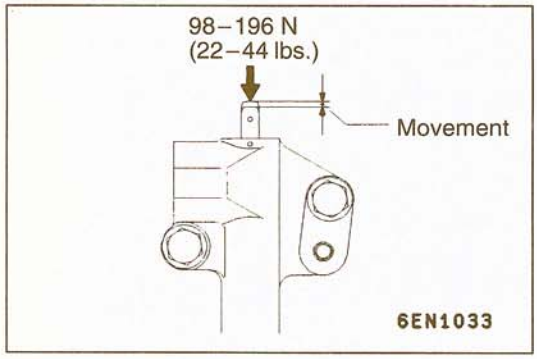


(4) Press the rod with a force of 98 to 196 N (22 to 44 lbs.) and measure the movement of rod.
If the measured value is out of the standard value, replace the auto-tensioner.

**Standard value: 1 mm (.0393 in.) or less**

**TSB Revision**

# INTAKE MANIFOLD AND FUEL PARTS

11300430056

## REMOVAL AND INSTALLATION <12 VALVE ENGINE>

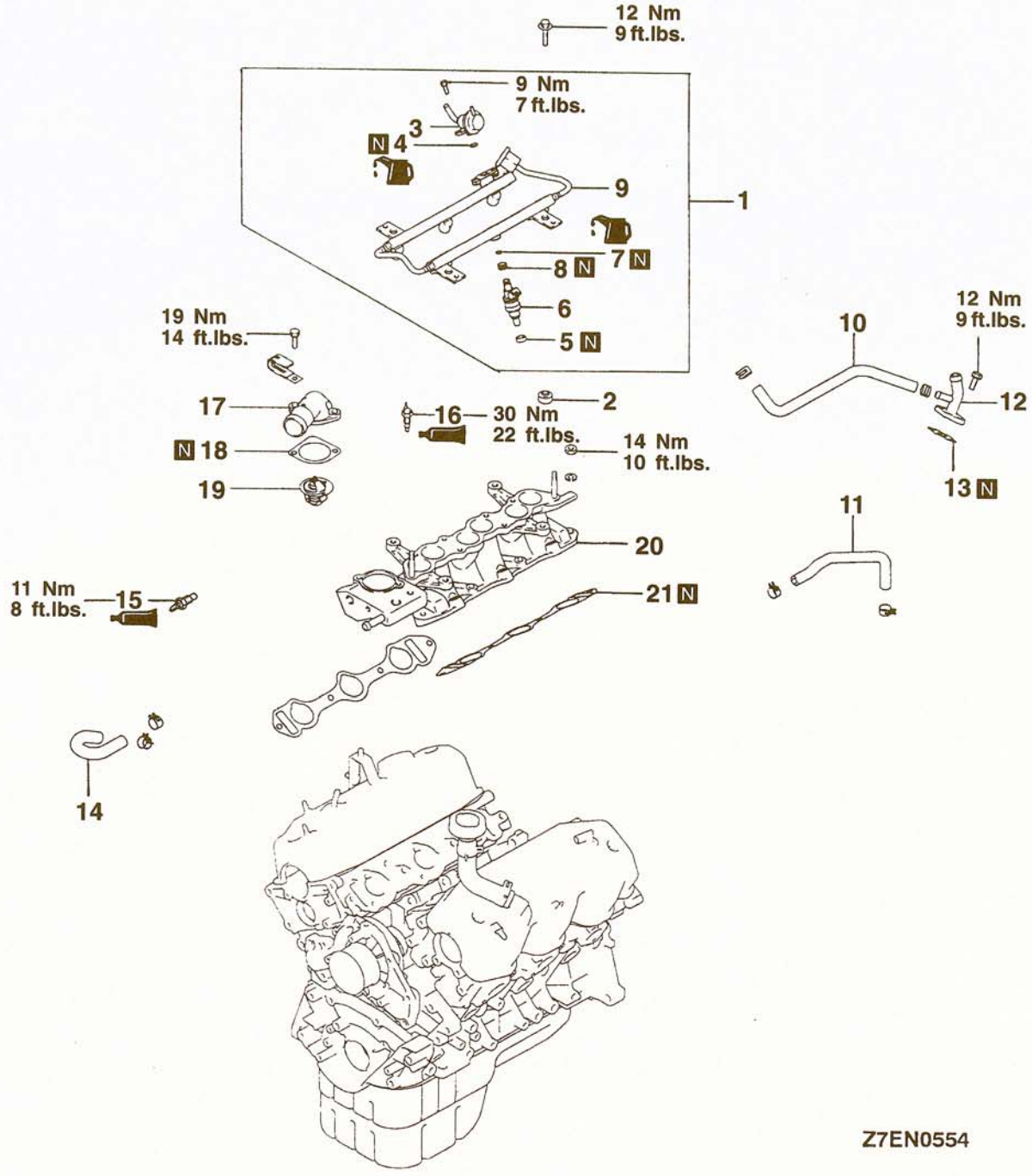


**Removal steps**

1. Injector and fuel rail
2. Insulator
3. ▶C◀ Fuel pressure regulator
4. O-ring
5. Insulator
6. ▶B◀ Injector
7. O-ring
8. Gromet
9. Fuel rail
10. Water hose A
11. Water hose B
12. Heat pipe
13. Heat pipe gasket
14. Water hose
15. ▶G◀ Engine coolant temperature gauge unit
16. ▶F◀ Engine coolant temperature sensor
17. Water outlet fitting
18. Water outlet fitting gasket
19. Thermostat
20. Intake manifold
21. Intake manifold gasket

**TSB Revision**

## REMOVAL AND INSTALLATION <24 VALVE ENGINE>

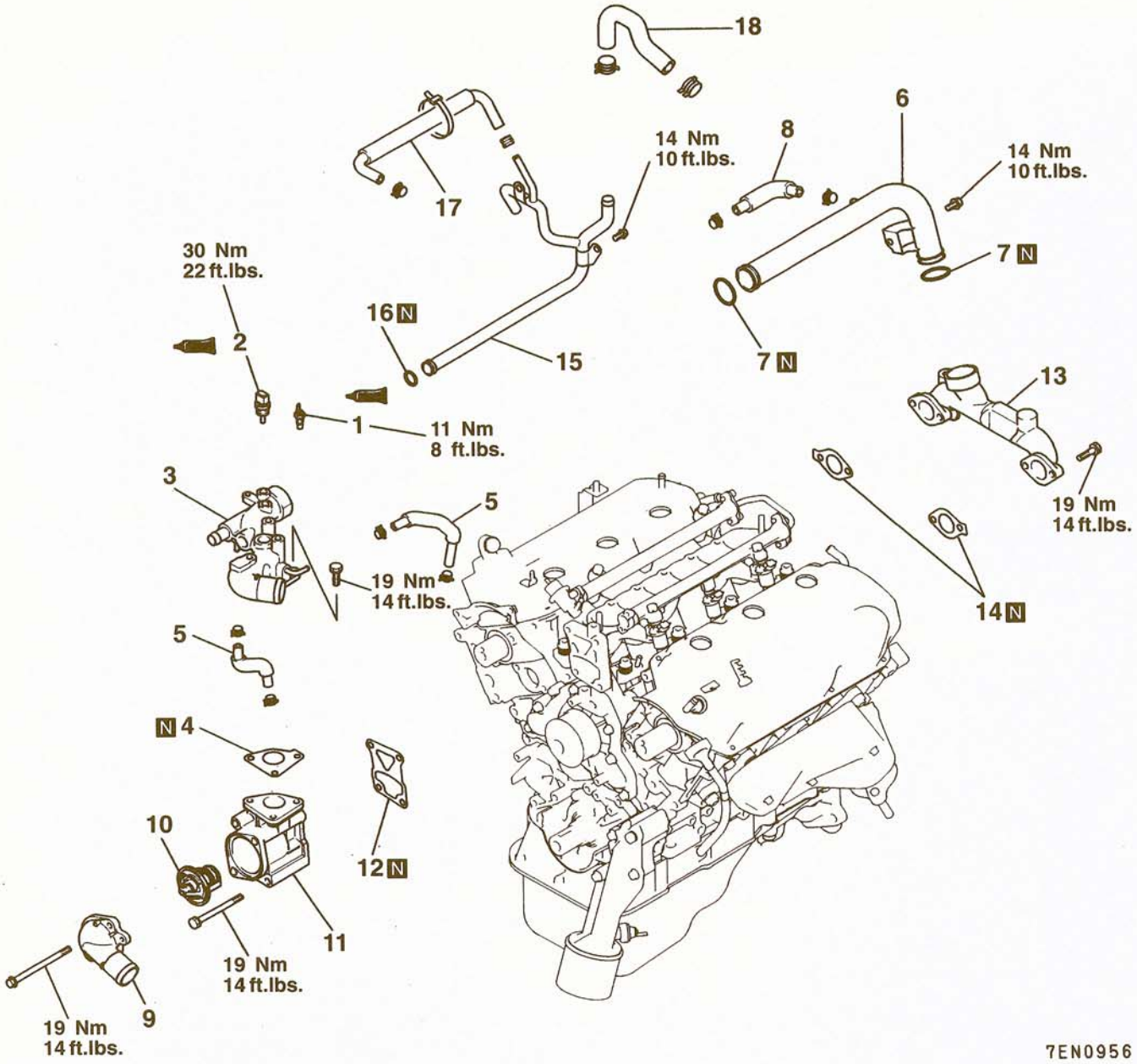


**Removal steps**

- ▶G◀ 1. Engine coolant temperature gauge unit
- ▶F◀ 2. Engine coolant temperature sensor
- 3. Water outlet fitting
- 4. Water outlet fitting gasket
- 5. Water hose
- ▶D◀ 6. Water outlet pipe
- ▶D◀ 7. O-ring
- 8. Water hose
- 9. Water inlet fitting
- ▶E◀ 10. Thermostat
- 11. Thermostat case
- 12. Thermostat case gasket
- 13. Water passage
- 14. Gasket
- ▶D◀ 15. Water pipe
- ▶D◀ 16. O-ring
- 17. Water hose
- 18. Water hose

TSB Revision

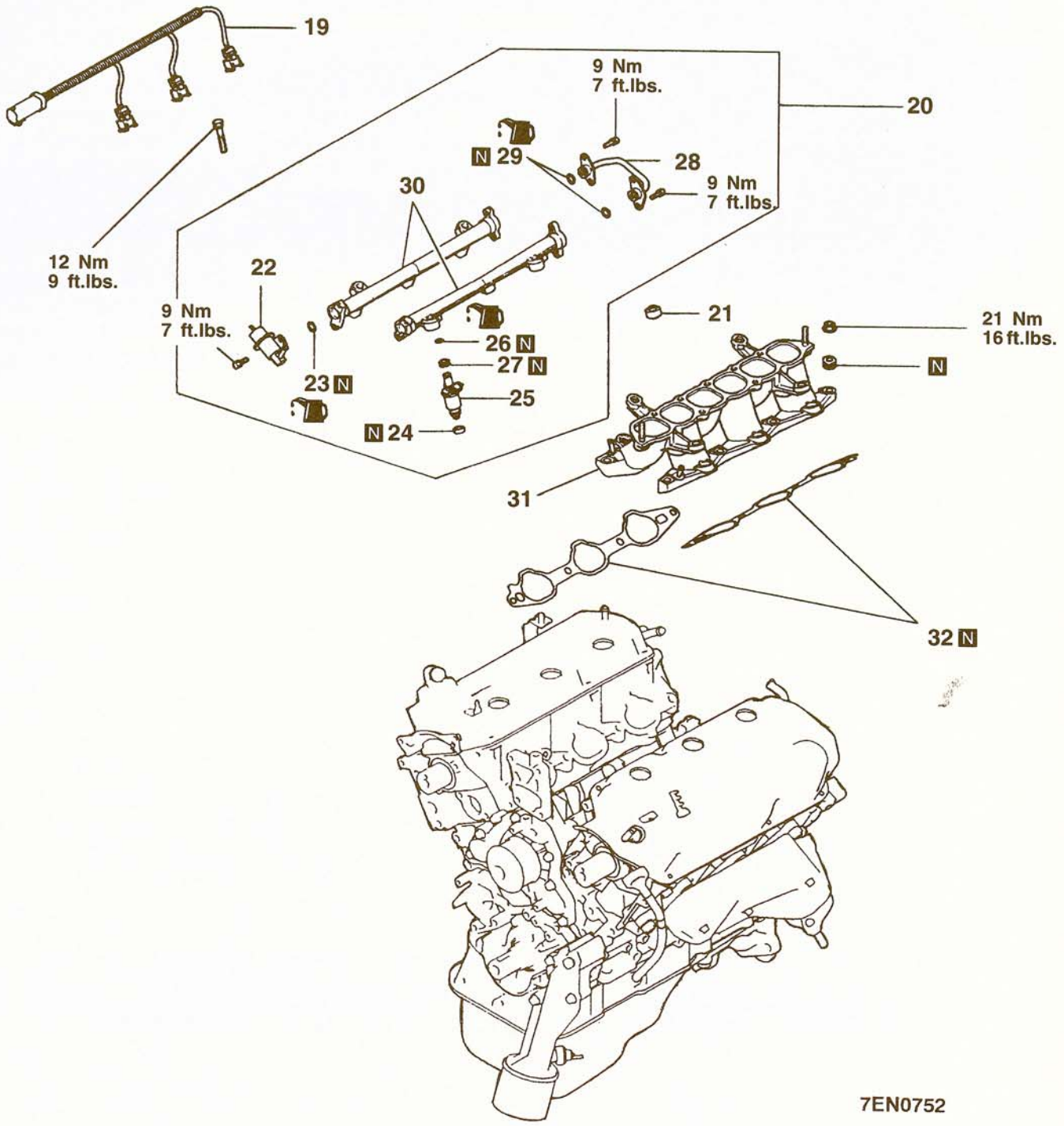


**Removal steps**

19. Injector harness
20. Injector and fuel rail
21. Insulator
▶C◀ 22. Fuel pressure regulator
23. O-ring
24. Insulator
▶B◀ 25. Injector
26. O-ring
27. Grommet
28. Fuel pipe
29. O-ring
30. Fuel rail
▶A◀ 31. Intake manifold
32. Intake manifold gasket

TSB Revision

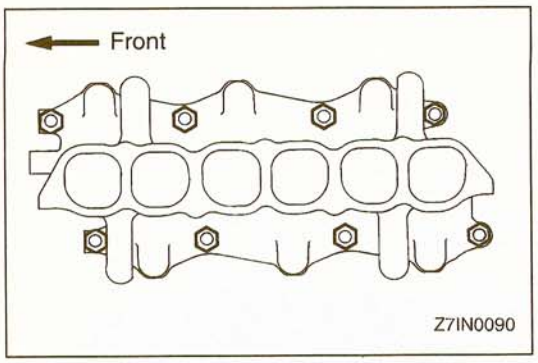


## INSTALLATION SERVICE POINTS

### ▶A◀ INTAKE MANIFOLD INSTALLATION

(1) Tighten the nuts on the right bank to 5 – 8 Nm (3 – 5.9 ft.lbs.).
(2) Tighten the nuts on the left bank to the specified torque. Then tighten the nuts on right bank to the specified torque.
(3) Tighten the nuts on the left bank and those on the right bank again in that order.

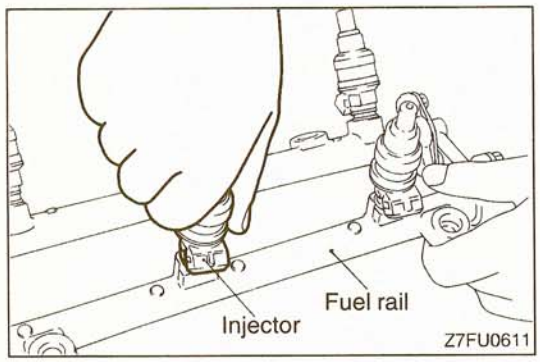


### ▶B◀ INJECTOR INSTALLATION

(1) Before installing the injector, the rubber O-ring must be lubricated with a drop of new engine oil for easy installation.

**Caution**
**Use care not to let the engine oil enter the delivery pipe.**

(2) Insert the injector top end into the fuel rail. Be careful not to damage O-ring during installation.

### ▶C◀ FUEL PRESSURE REGULATOR INSTALLATION

(1) Before installing the pressure regulator, the O-ring must be lubricated with a drop of new engine oil for easy installation.

**Caution**
**Use care not to let the engine oil enter the delivery pipe.**

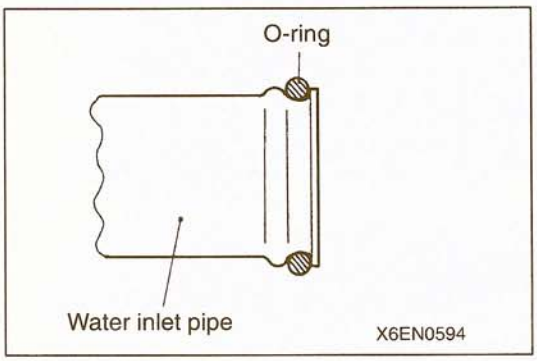


### ▶D◀ O-RING AND WATER PIPE INSTALLATION

(1) Wet the O-ring (with water) to facilitate assembly.

**Caution**
**Keep the O-ring free of oil or grease.**

**TSB Revision**

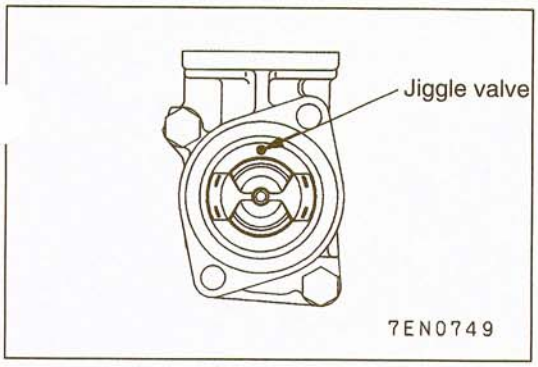


### ▶E◀ THERMOSTAT INSTALLATION

(1) Install the thermostat in the thermostat case with its jiggle valve located at the top position.

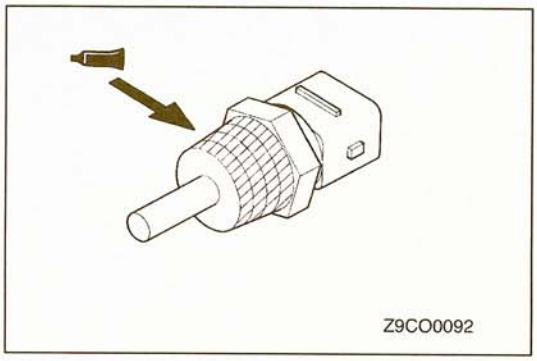


### ▶F◀ SEALANT APPLICATION TO ENGINE COOLANT TEMPERATURE SENSOR

**Specified sealant:**
**3M Nut Locking No. 4171 or equivalent**

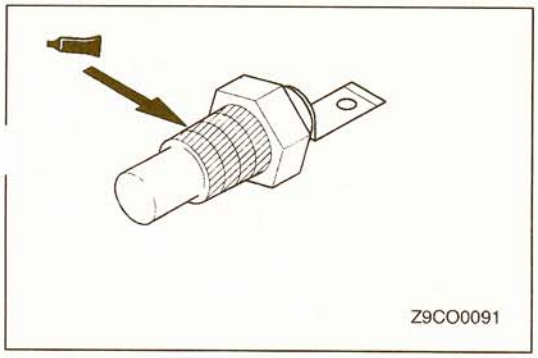


### ▶G◀ SEALANT APPLICATION TO ENGINE COOLANT TEMPERATURE GAUGE UNIT

**Specified sealant: 3M Part No. 8660 or equivalent**

# EXHAUST MANIFOLD

11300490078

## REMOVAL AND INSTALLATION <12 VALVE ENGINE>

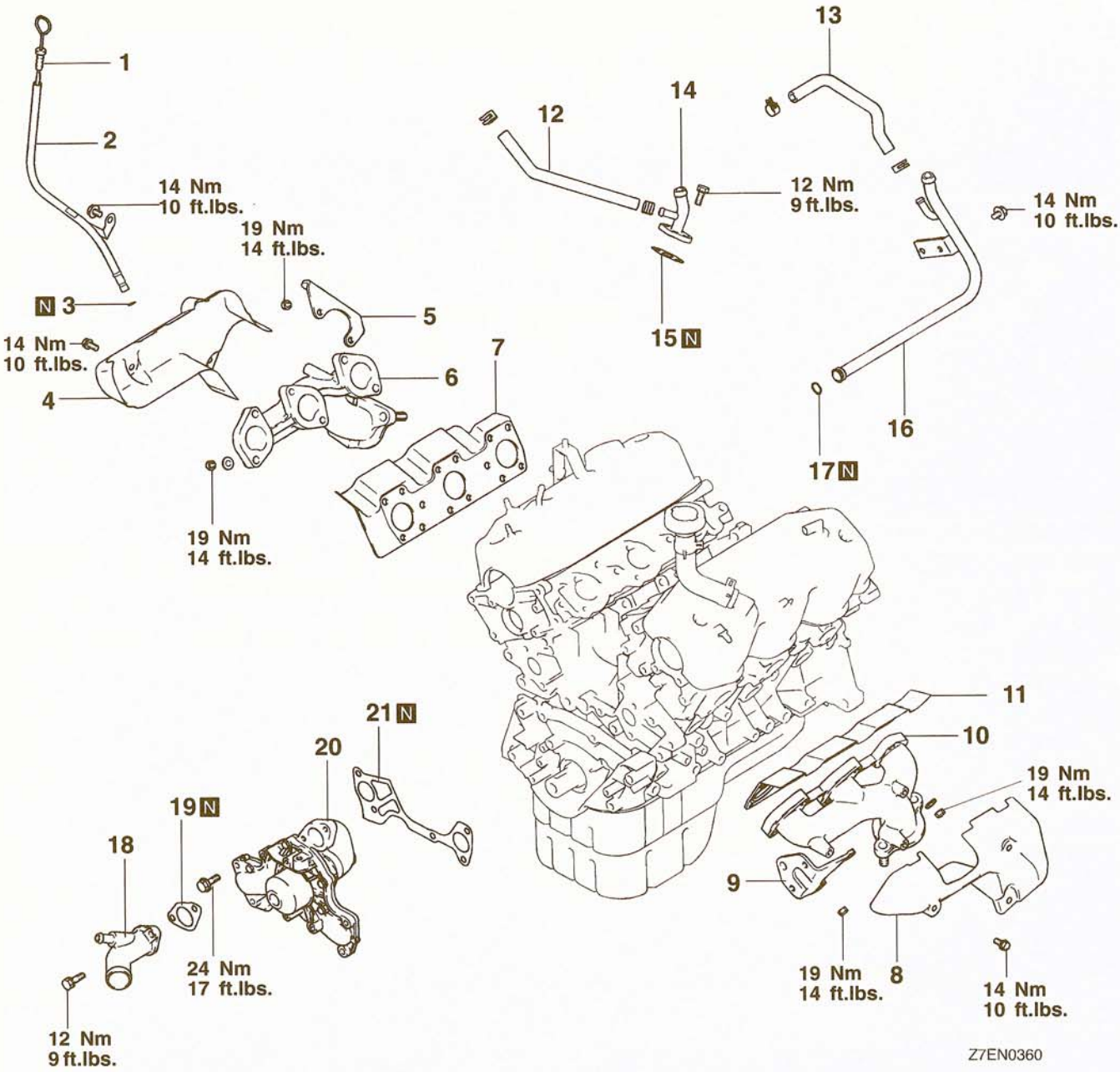


**Removal steps**

1. Oil level gauge
2. Oil level gauge guide
3. O-ring
4. Heat protector, right
5. Engine hanger
6. Exhaust manifold, right
▶B◀ 7. Exhaust manifold gasket
8. Heat protector, left
9. Bracket
10. Exhaust manifold, left
▶B◀ 11. Exhaust manifold gasket
12. Water hose
13. Water hose A
14. Heater pipe
15. Heater pipe gasket
16. Water pipe
▶A◀ 17. O-ring
▶A◀ 18. Water inlet pipe
19. Water inlet pipe gasket
20. Water pump
21. Water pump gasket

TSB Revision

## REMOVAL AND INSTALLATION <24 VALVE ENGINE>

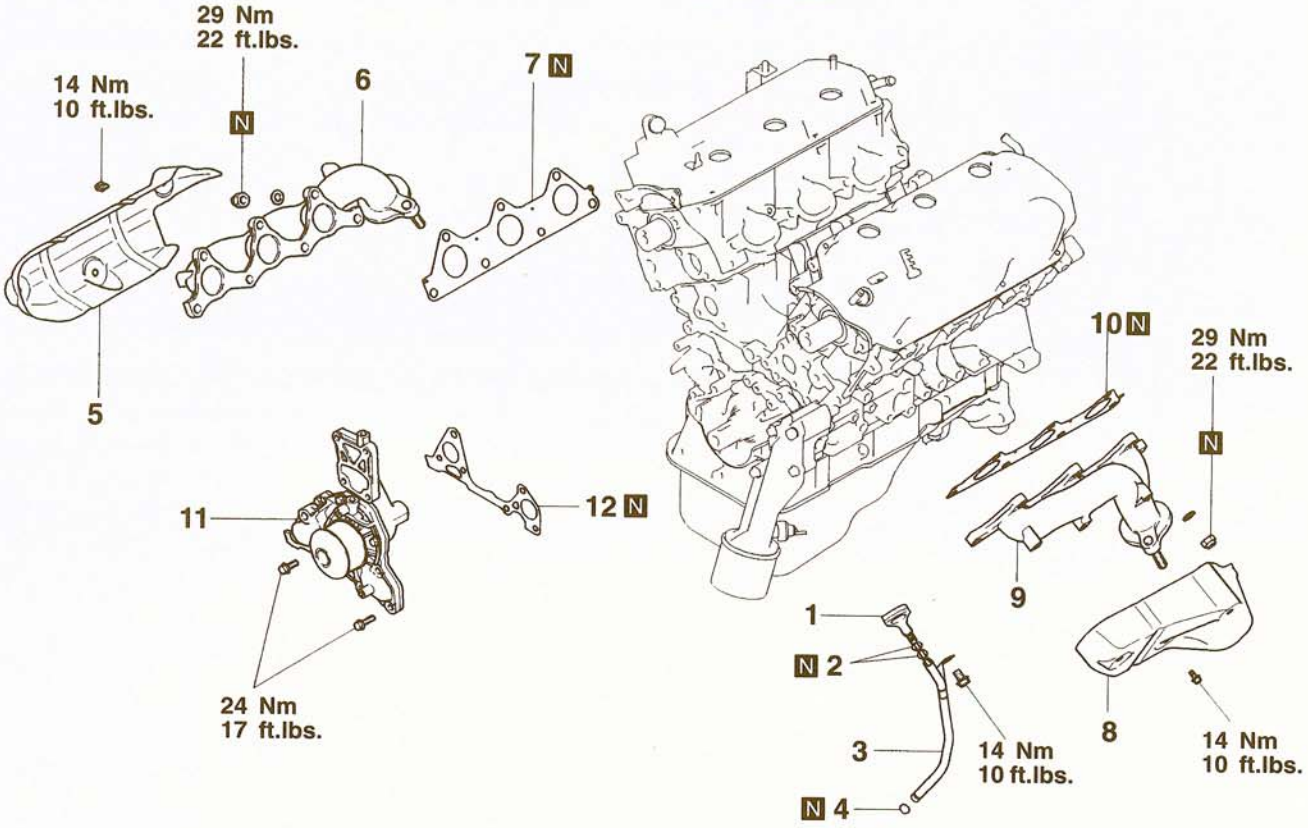


7EN0753

**Removal steps**

1. Oil level gauge
2. O-ring
3. Oil level gauge guide
4. O-ring
5. Heat protector, right
6. Exhaust manifold, right
7. Exhaust manifold gasket
8. Heat protector, left
9. Exhaust manifold, left
10. Exhaust manifold gasket
11. Water pump
12. Water pump gasket

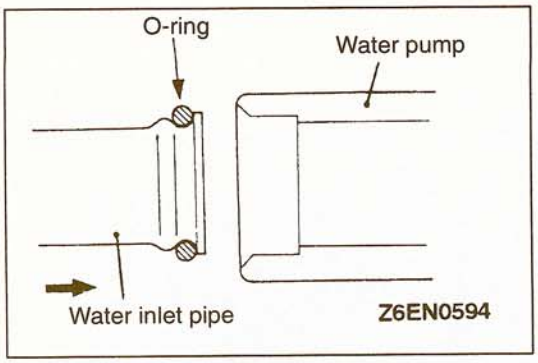


## INSTALLATION SERVICE POINTS

### ▶A◀ O-RING AND WATER PIPE INSTALLATION

(1) Wet the O-ring (with water) to facilitate assembly.

**Caution**
**Keep the O-ring free of oil or grease.**

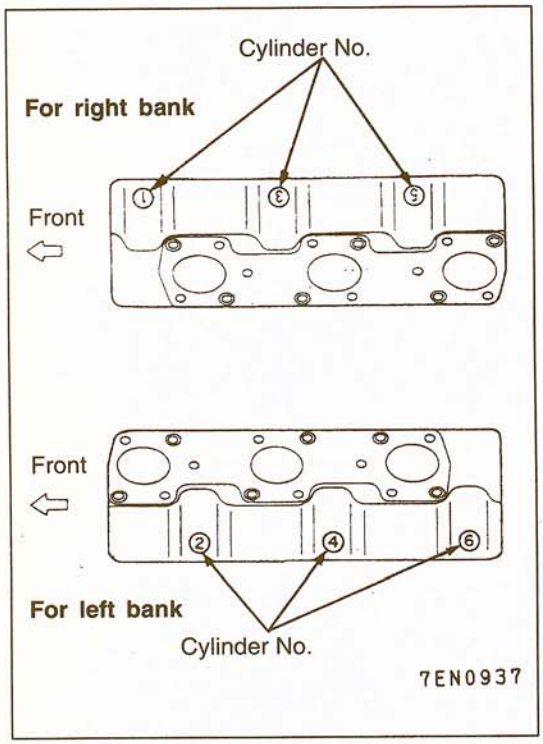


### ▶B◀ EXHAUST MANIFOLD GASKET INSTALLATION

(1) Install gaskets with cylinder number 1, 3 and 5 embos-sed on their top side to the right bank and install those with cylinder number 2, 4 and 6 to the left bank.

# ROCKER ARMS AND CAMSHAFT

11300540131

## REMOVAL AND INSTALLATION <12 VALVE ENGINE>

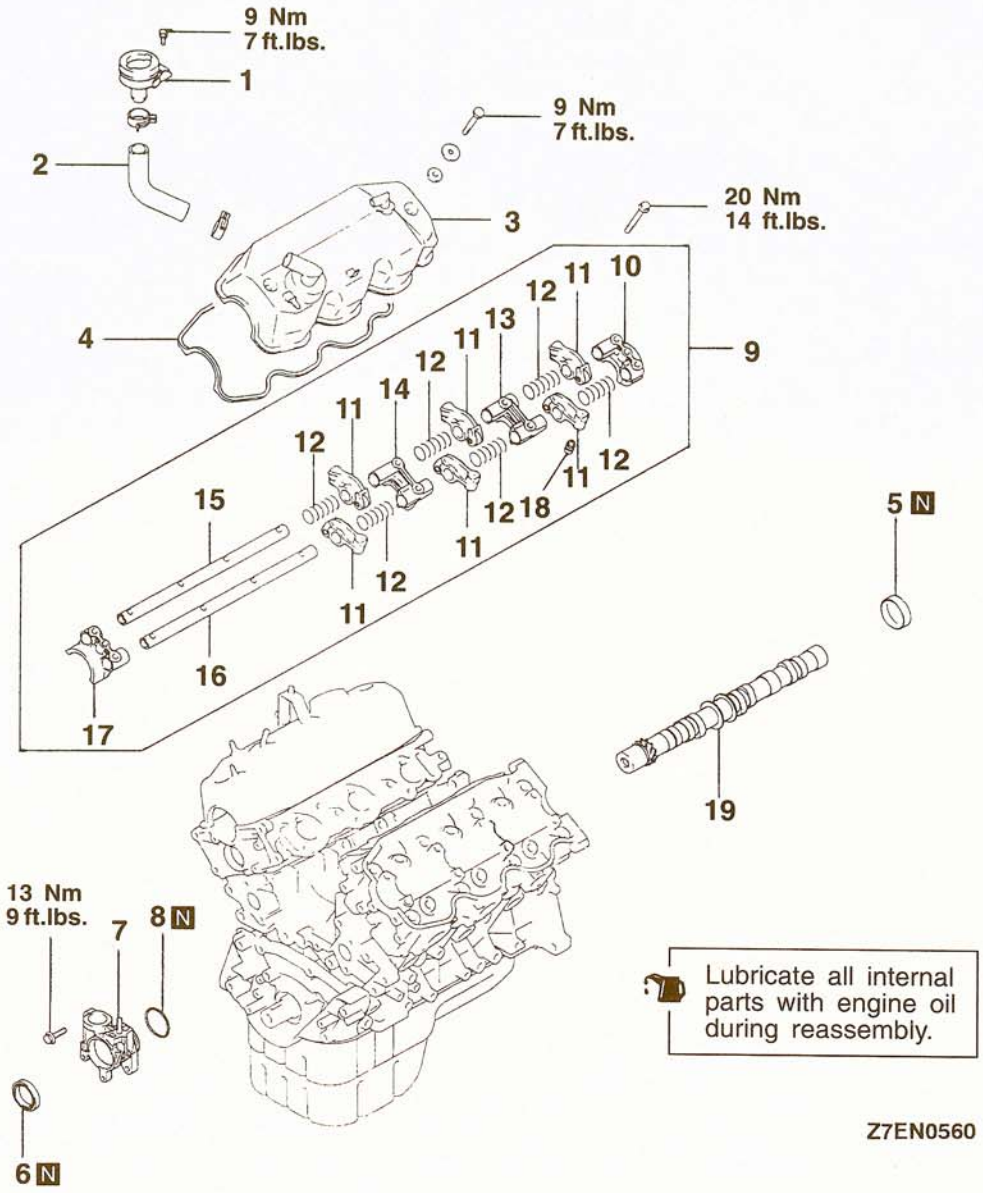


**Removal steps**

1. Oil fillter
2. Oil fillter tube
- ▶H◀ 3. Rocker cover
4. Gasket
- ▶G◀ 5. Circular packing
- ▶F◀ 6. Camshaft oil seal
7. Distributor adaptor
8. O-ring
- ◀A▶ ▶C◀ 9. Rocker arm, rocker arm shaft
10. Bearing cap No. 4
11. Rocker arm
12. Spring
13. Bearing cap No. 3
14. Bearing cap No. 2
- ▶B◀ 15. Rocker arm shaft "B"
- ▶B◀ 16. Rocker arm shaft "A"
17. Bearing cap No. 1
18. Lash adjuster
19. Camshaft

TSB Revision

## REMOVAL AND INSTALLATION <24 VALVE ENGINE>

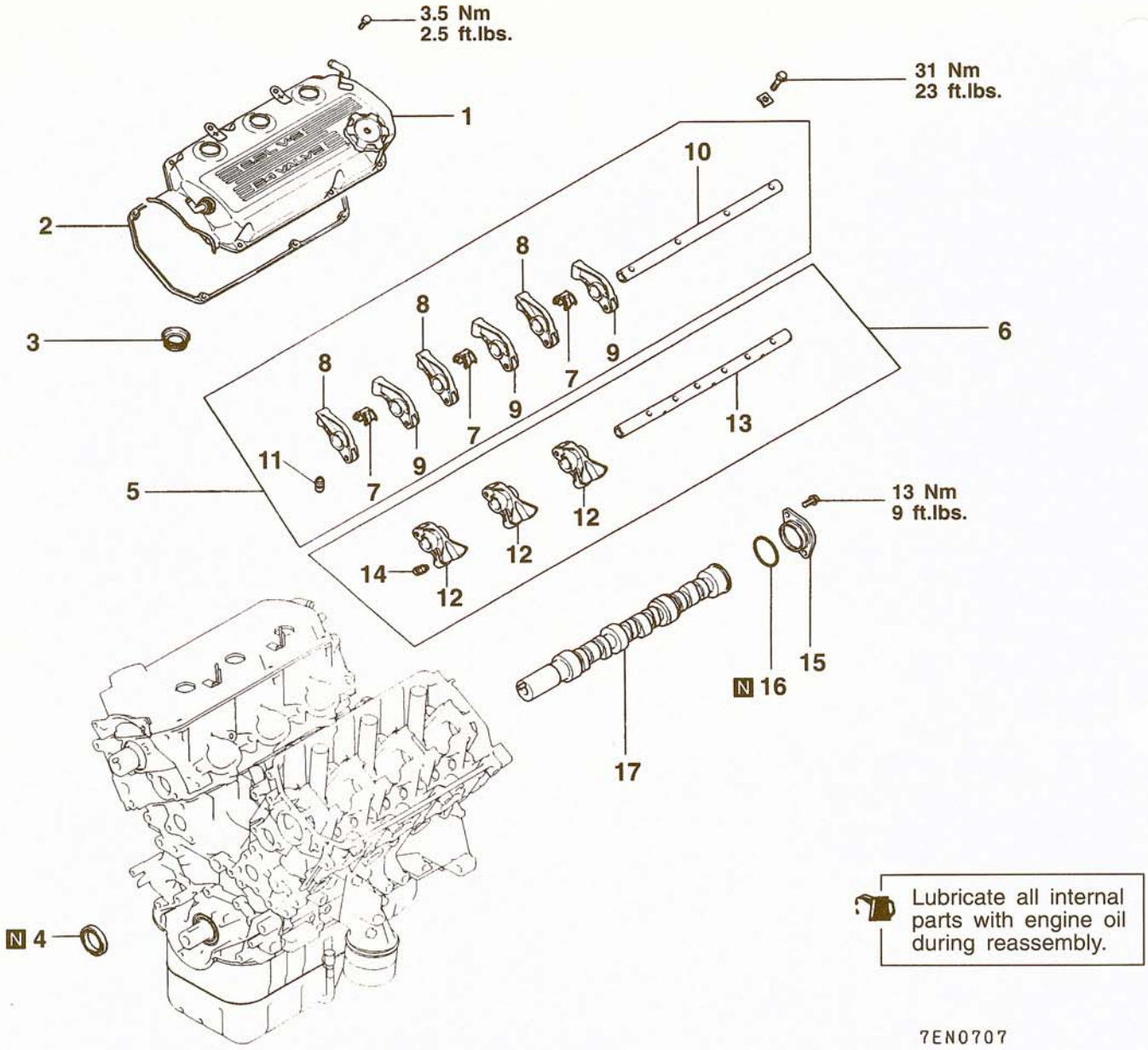


**Removal steps**

1. Rocker cover
2. Rocker cover gasket
3. Oil seal
4. Camshaft oil seal
5. Rocker arm, rocker arm shaft
6. Rocker arm, rocker arm shaft
7. Rocker shaft spring
8. Rocker arm A
9. Rocker arm B
10. Rocker arm shaft
11. Lash adjuster
12. Rocker arm C
13. Rocker arm shaft
14. Lash adjuster
15. Thrust case
16. O-ring
17. Camshaft

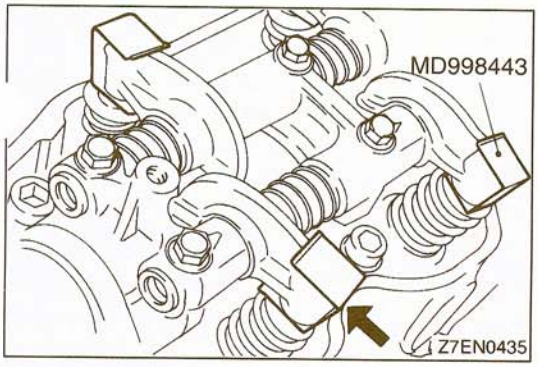


## REMOVAL SERVICE POINT

### ◀A▶ ROCKER ARM, ROCKER ARM SHAFT REMOVAL

(1) Install the special tools to the rocker arm to hold the lash adjuster.
(2) Loosen the camshaft bearing cap bolt. Do not remove the bolts from the cap.
(3) Remove the rocker arm, shaft and bearing cap as an assembly.

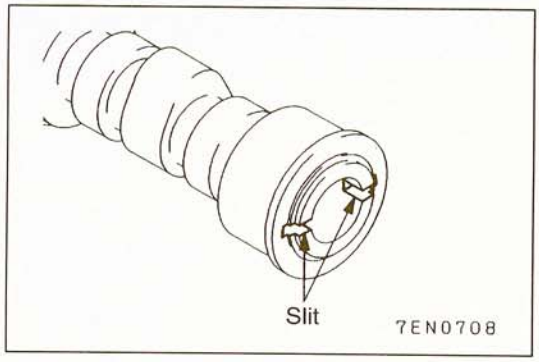


## INSTALLATION SERVICE POINTS

### ▶A◀ CAMSHAFT INSTALLATION

(1) Apply engine oil to the camshaft journals and cams and then install the camshafts.
Use care to prevent confusion of the right and left bank camshafts.

NOTE
The right bank camshaft is identified by a slit 4 mm wide at the rear end of the camshaft.

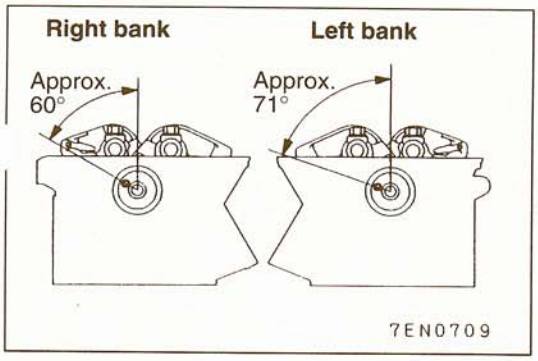


(2) Check to see that the dowel pin of the camshaft is located at the position shown.

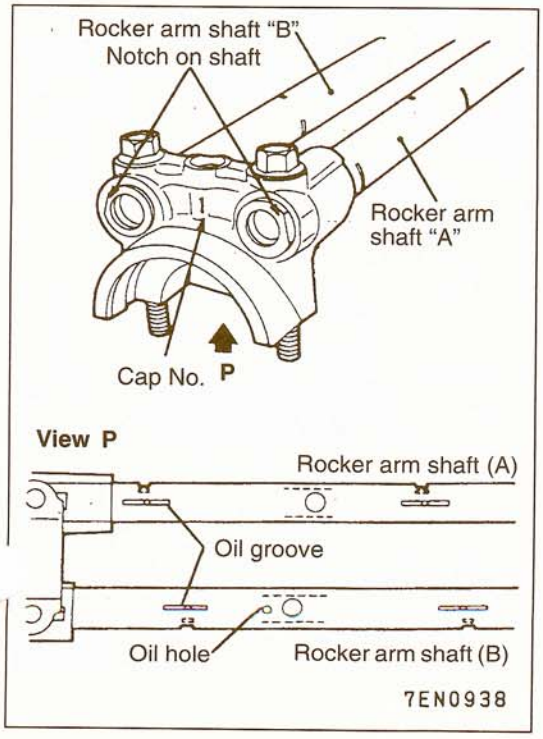


### ▶B◀ ROCKER ARM SHAFT INSTALLATION

(1) Install the rocker arm shafts "A" and "B" to the camshaft bearing cap No.1 and insert the bolts into the holes of the bearing cap and shafts.
(2) Install the rocker arm shafts with the notched side facing the bearing cap No.1 and the oil grooved side facing downward. The shaft with a smaller oil hole is the rocker arm shaft "A".

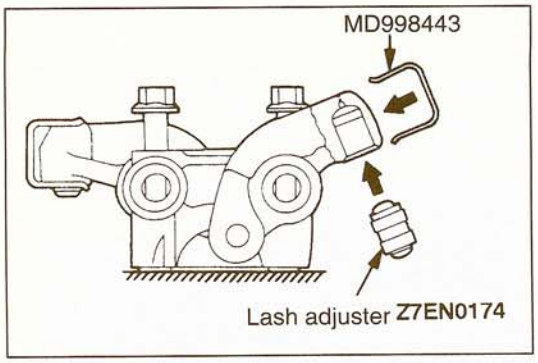


### ▶C◀ ROCKER ARM, ROCKER ARM SHAFT INSTALLATION

(1) Insert the lash adjuster to rocker arm, being careful nr to spill the diesel fuel. Then use the special tool to prevei. the adjuster from falling while installing it.
(2) Apply a minimum amount of the specified sealant on the four places of the cylinder head.

NOTE
Be sure the sealing agent does not swell out onto the cam journal surface of the cylinder head. If it swells out, immediately wipe it off before it can dry.

**Specified sealant:**
**3M NUT Locking No. 4171 or equivalent**

(3) Install the rocker arms, shafts and bearing caps such that the arrow mark on the bearing cap faces in the same direction as the arrow mark on the cylinder head.
(4) Tighten the bearing cap bolts to the specified torque.
(5) Remove the special tools from all rocker arms.

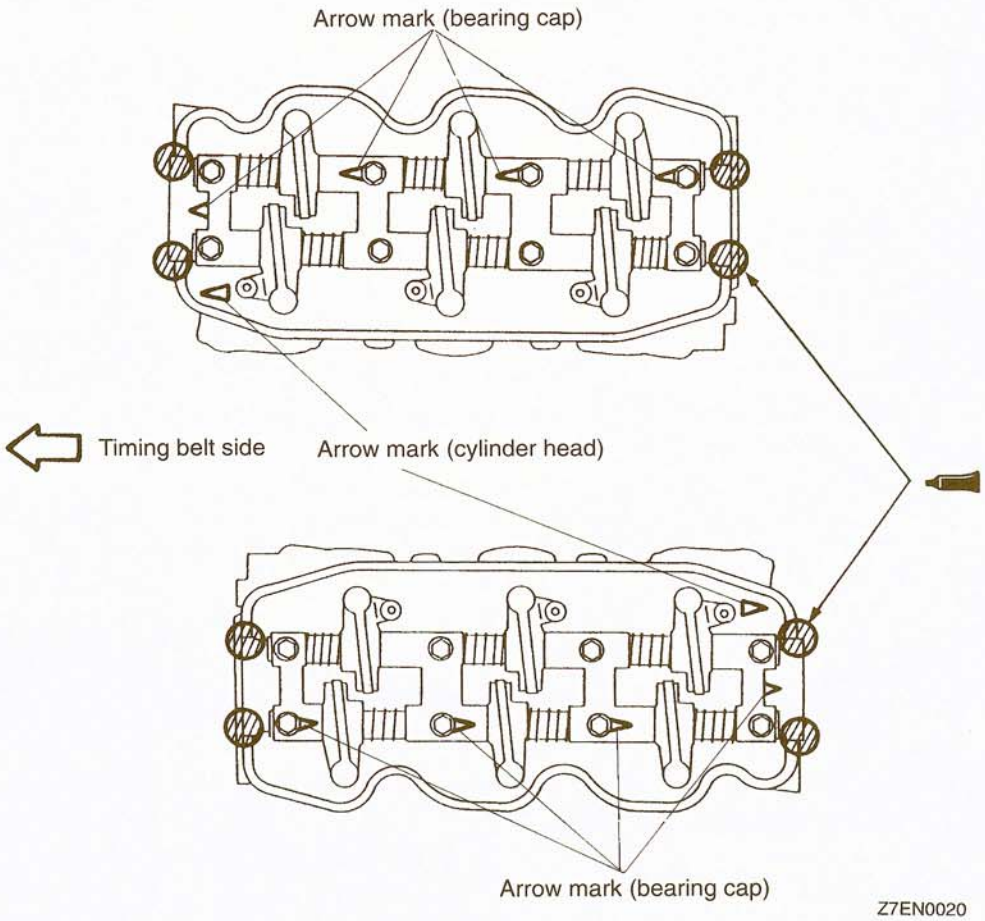

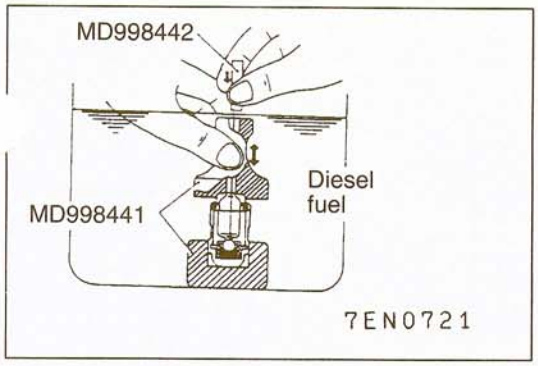


### ▶D◀ LASH ADJUSTER INSTALLATION

(1) Immerse the lash adjuster in clean diesel fuel.
(2) Using the special tool (air bleed wire), move the pluger up and down 4 or 5 times while pushing down lightly on the check ball in order to bleed out the air.

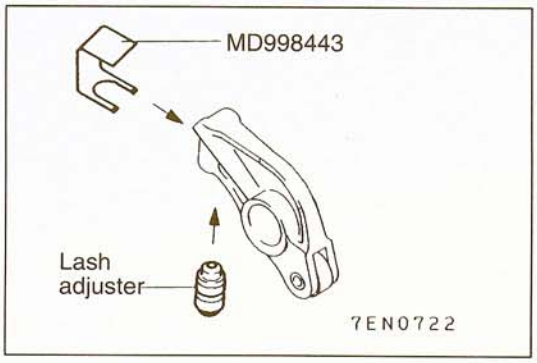


(3) Insert the lash adjuster to rocker arm, being careful not to spill the diesel fuel. Then use the special tool to prevent the adjuster for falling while istalling it.

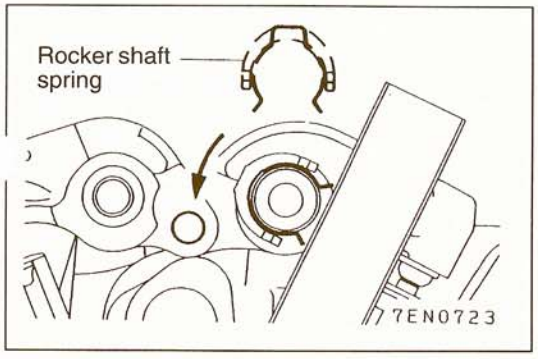


### ▶E◀ ROCKER ARM, ROCKER ARM SHAFT AND ROCKER SHAFT SPRING INSTALLATION

(1) Temporatily tighten the rocker shaft with bolts at the condition that all the intake valve rocker arms do not push the valves.
(2) Insert the rocker shaft spring from above and mount it at right angles to the plug guide.

NOTE
Before installing the exhaust rocker arms and rocker arm shaft, mount the rocker shaft spring.

(3) Remove the special tools used to hold the lash adjuster in position.

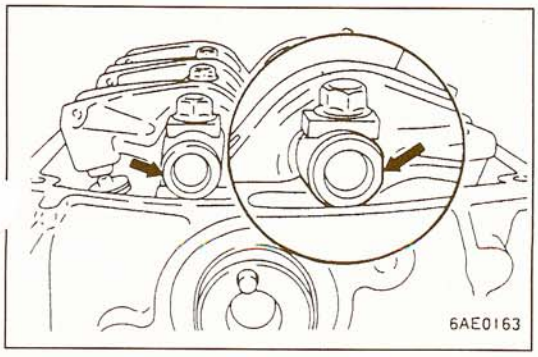


(4) Check to ensure that the flat side of the rocker shaft is directed as shown in the ilustration.

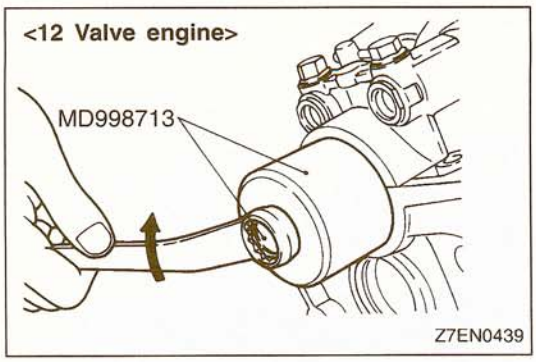


## ▶F◀ CAMSHAFT OIL SEAL INSTALLATION

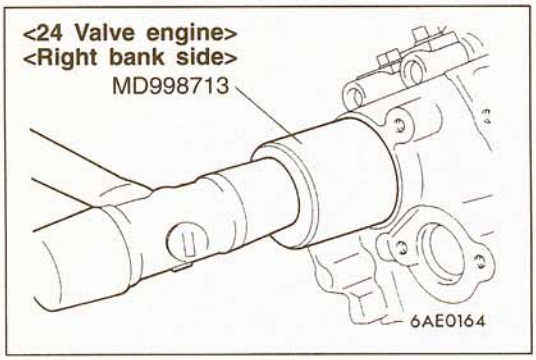


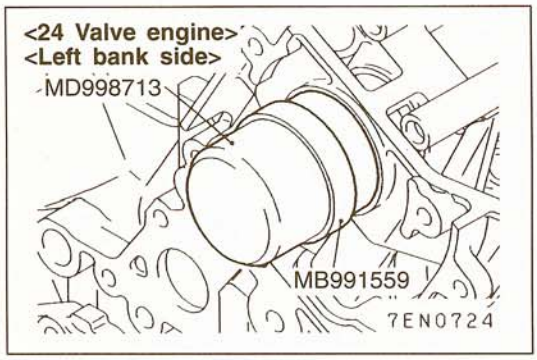


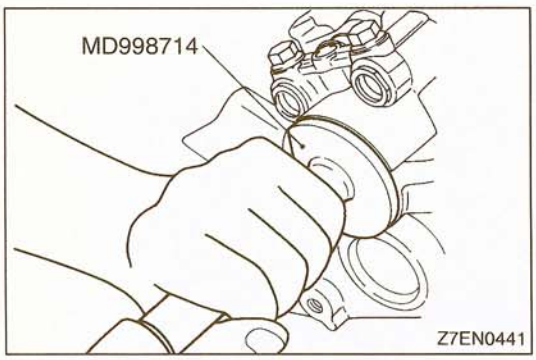


## ▶G◀ CIRCULAR PACKING INSTALLATION

(1) Install a 1.3 to 1.5 mm (.052 to .059 in.) thick spacer to the special tool and drive in the circular packing.

NOTE
Use of MD724328 spacer for transmission is recommended.

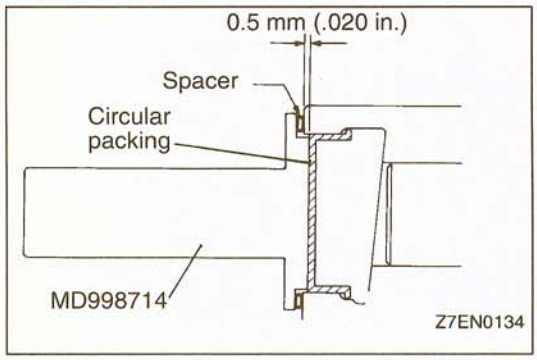


**Caution**
**The packing is overdriven if no spacer is fitted to the special tool.**

**TSB Revision**

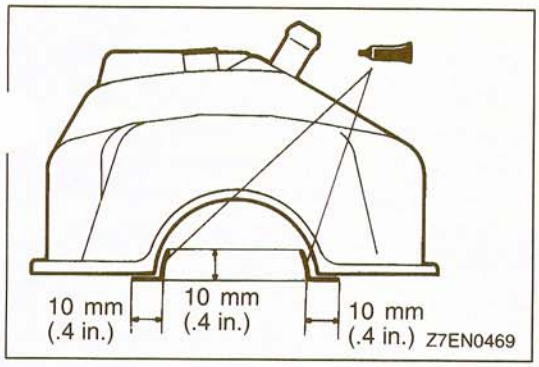


### ▶H◀ ROCKER COVER INSTALLATION

(1) Apply specified sealant on the area specified in the illustration.

**Specified sealant:**
**3M ATD Part No. 8660 or equivalent**

## INSPECTION

11300550127

### ROCKER ARM SHAFT

(1) Check the rocker arm mounting portions of the rocker arm shafts for wear or damage. Replace as necessary.

### ROCKER ARM

(1) Check the roller surface and replace the rocker arm if recesses, damage or heat seizure is observed.
(2) Check roller rotation and replace the rocker arm if uneven rotation or roller backlash is observed.
(3) Check the inside diameter and replace the rocker arm if damage or seizure is observed.

### CAMSHAFT

(1) Inspect the camshaft bearing journals for damage and binding. If the journals are binding, also check the cylinder head for damage. Also check the cylinder head oil holes for clogging.
(2) Check the tooth surface of the distributor drive gear teeth of the camshaft and replace if abnormal wear is evident.
(3) Check the cam surface for abnormal wear and damage and replace if defective. Also measure the cam height and replace if out of limit.

**<12 valve engine>**

| Standard value | Limit |
|---|---|
| 41.25 (1.62) | 40.75 (1.60) |

**<24 valve engine>**

| | Standard value | Limit |
|---|---|---|
| Intake mm (in.) | 37.58 (1.48) | 37.08 (1.46) |
| Exhaust mm (in.) | 36.95 (1.45) | 36.45 (1.44) |

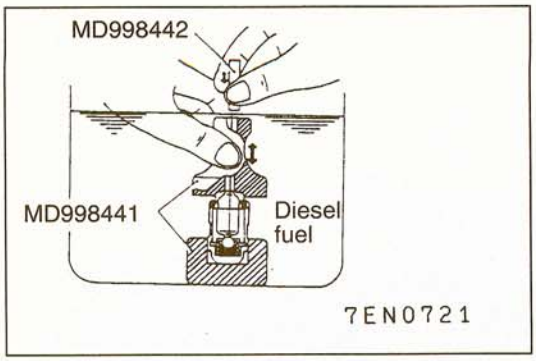


## LASH ADJUSTER LEAK DOWN TEST

**Caution**

1. **The lash adjuster is a precision part. Keep it fr from dust and other foreign matters.**
2. **Do not disassemble the lash adjusters.**
3. **When cleaning the lash adjusters, use clean diesel fuel only.**

(1) Immerse the lash adjuster in clean diesel fuel.
(2) While lightly pushing down the inner steel ball using the special tool, move the plunger up and down four or five times to bleed air.
Use of the Retainer facilitates the air bleeding of the rocker arm mounted type lash adjuster.
(3) Remove the special tool and press the plunger. If the plunger is hard to be pushed in, the lash adjuster is normal. If the plunger can be pushed in all the way readily, bleed the lash adjuster again and test again. If the plunger is still loose, replace the lash adjuster.

**Caution**
**Upon completion of air bleeding, hold the lash adjuster upright to prevents the inside diesel fuel from spilling.**

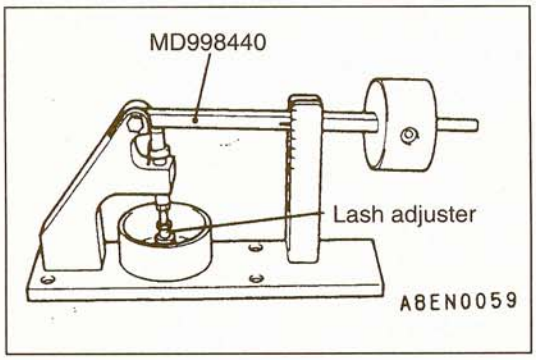


(4) After air bleeding, set the lash adjuster on the special tool (Leak down tester MD998440).
(5) After the plunger has gone down somewhat 0.2–0.5 mm (.008–.020 in.), measure the time taken for it to go down 1 mm (.04 in.). Replace if the measured time is out c specification.

**Standard value:**
**4–20 seconds / 1 mm (.04 in.)**
**[Diesel fuel at 15–20°C (50–68°F)]**

# CYLINDER HEAD AND VALVE

11300690133

## REMOVAL AND INSTALLATION

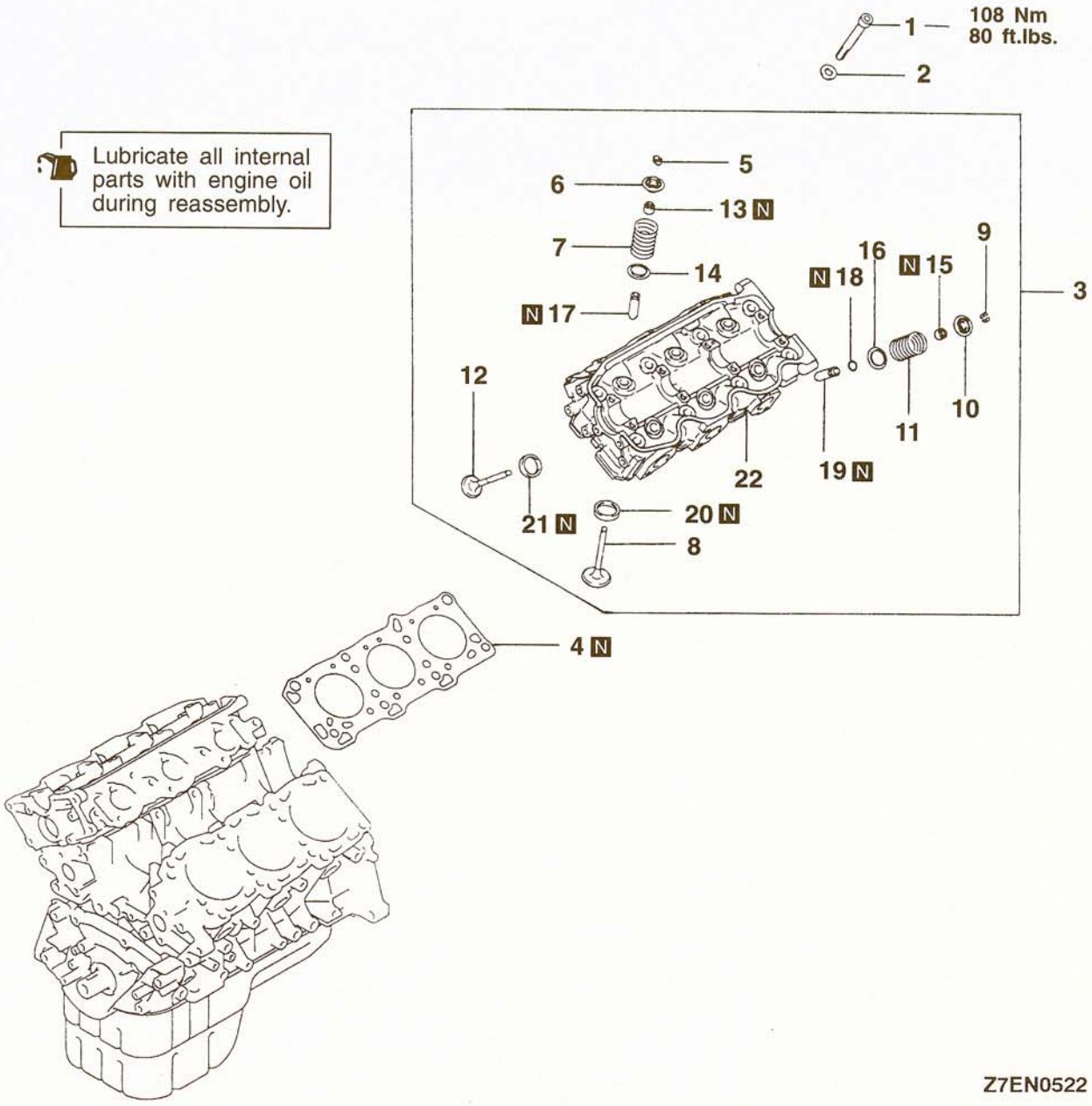


**Removal steps**

◀A▶ ▶E◀ 1. Cylinder head bolt
2. Washer
3. Cylinder head assembly
▶D◀ 4. Cylinder head gasket
◀B▶ ▶C◀ 5. Retainer lock
6. Valve spring retainer
▶B◀ 7. Valve spring
8. Inlet valve
◀B▶ ▶C◀ 9. Retainer lock
10. Valve spring retainer
▶B◀ 11. Valve spring
12. Exhaust valve
◀C▶ ▶A◀ 13. Valve stem seal
14. Valve spring seat
◀C▶ ▶A◀ 15. Valve stem seal
16. Valve spring seat
17. Inlet valve guide
18. Snap ring
19. Exhaust valve guide
20. Inlet valve seat
21. Exhaust valve seat
22. Cylinder head

TSB Revision

## REMOVAL SERVICE POINTS

### PRECAUTION FOR REMOVED PARTS

(1) Keep removed parts in order according to the cylinde number and intake/exhaust.

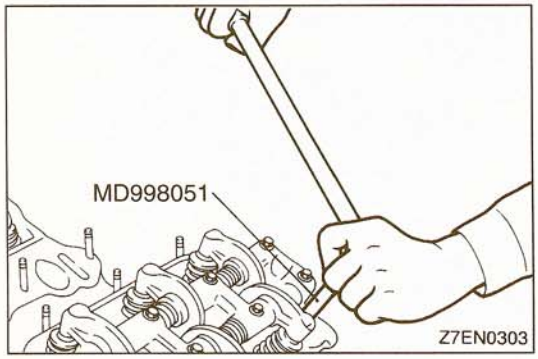


### ◀A▶ CYLINDER HEAD BOLT REMOVAL

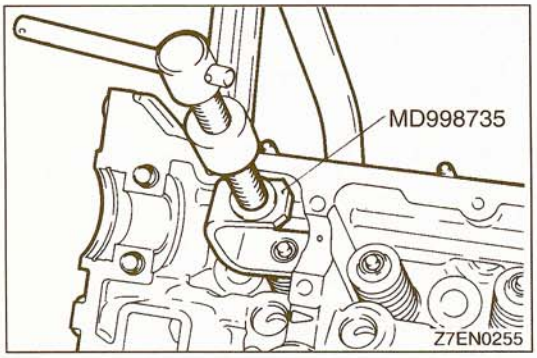


### ◀B▶ RETAINER LOCK REMOVAL

(1) Using the special tool, compress the spring.
(2) Remove the retainer locks.

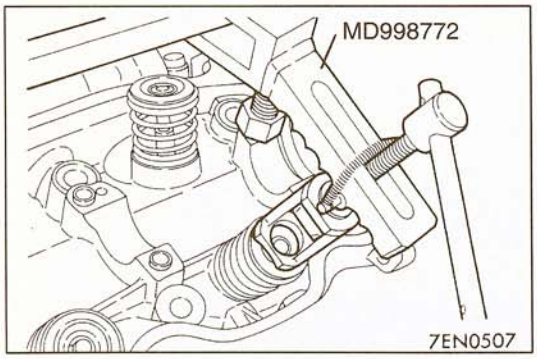


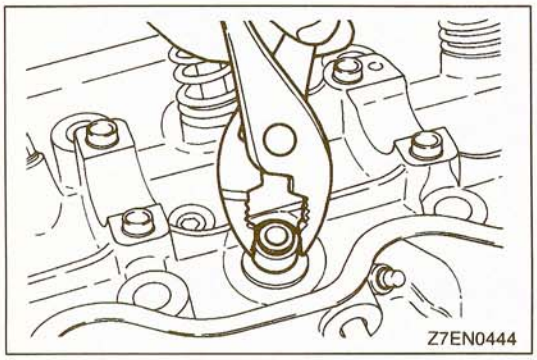


### ◀C▶ VALVE STEM SEAL REMOVAL

(1) Do not reuse removed valve stem seals.

TSB Revision

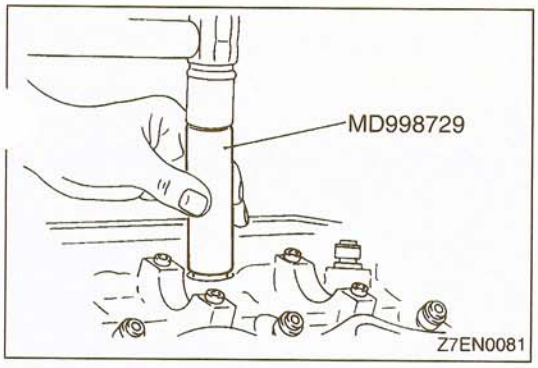


## INSTALLATION SERVICE POINTS

### ▶A◀ VALVE STEM SEAL INSTALLATION

**<12 VALVE ENGINE>**

(1) Install the valve spring seat.
(2) Using the special tool, install a new stem seal to the valve guide.

**Caution**
**1. Do not reuse removed valve stem seals.**
**2. Always use the special tool to install the valve stem seal. Improperly installed valve stem seal may cause oil down.**

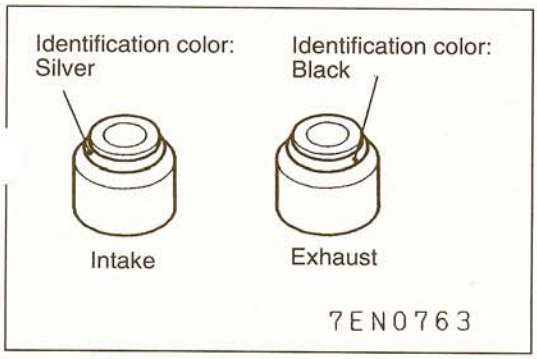


**<24 VALVE ENGINE>**

(1) Install the valve spring seat.
(2) Using the special tool, install a new stem seal to the valve guide.

**Caution**
**1. Valve stem seals for intake valve and for echaust valve are different. Be sure to install the correct ones.**
**Vavle stem seal identification color**
**Intake: Silver**
**Exhaust: Black**
**2. Do not reuse removed valve stem seal.**
**3. Always use the special tool to install the valve stem seal. Improperly installed valve stem seal may cause oil leak.**

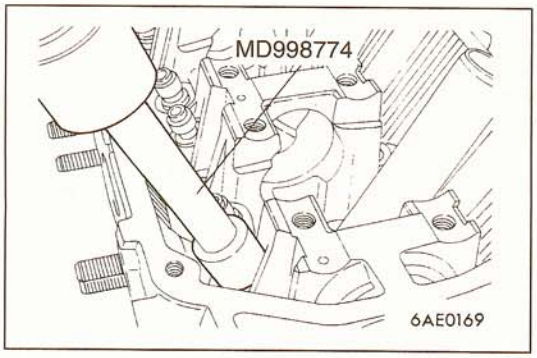


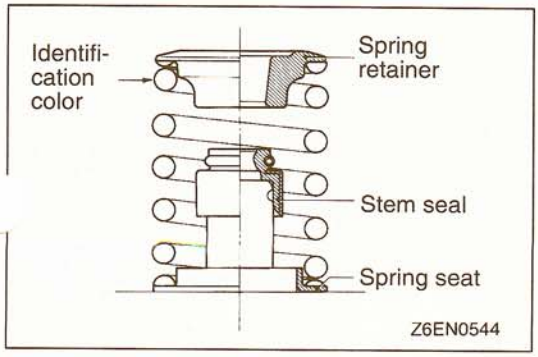


### ▶B◀ VALVE SPRING INSTALLATION

(1) Direct the valve spring end with identification color toward the spring retainer.

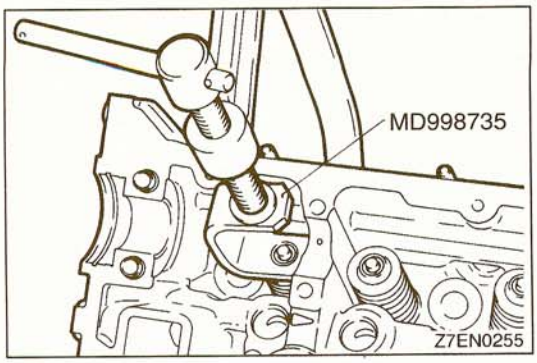


### ▶C◀ RETAINER LOCK INSTALLATION

(1) Using the special tool, compress the valve spring and insert the retainer lock into position.

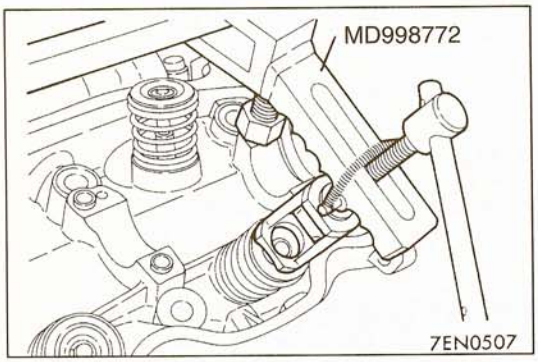


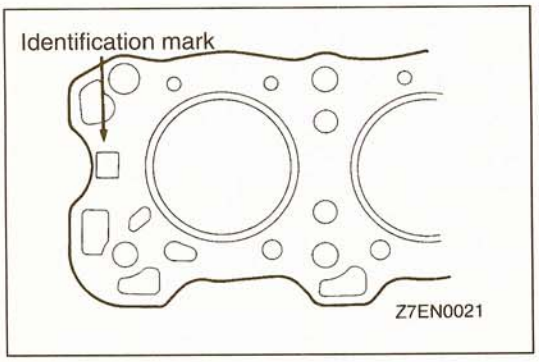


### ▶D◀ CYLINDER HEAD GASKET IDENTIFICATION

**Caution**
**Do not apply sealant to the cylinder head gasket.**

**Identification mark:**
**No-marks <12 VALVE ENGINE>**
**2DN <24 VALVE ENGINE (Federal)>**
**72D4 <24 VALVE ENGINE (California)>**

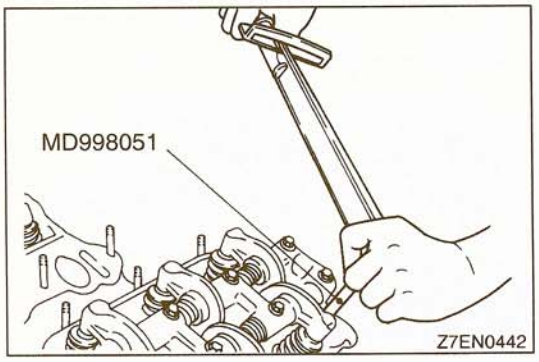


### ▶E◀ CYLINDER HEAD BOLT INSTALLATION

(1) Tighten the cylinder head bolts in the sequence shown. Each bolt should be tightened in two to three steps, torquing progressively. Tighten to the specified torque in the final sequence.

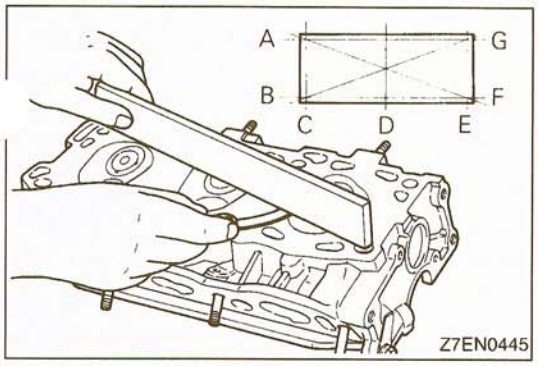


## INSPECTION

11300700140

### CYLINDER HEAD

(1) Check the cylinder head gasket surface for flatness by using a straightedge in the directions of A through G shown in the illustration.

**Standard value**

**0.05 mm (.0020 in.) <12 Valve Engine>**
**0.03 mm (.0012 in.) <24 Valve Engine>**

**Limit: 0.2 mm (.008 in.)**

(2) If the service limit is exceeded, correct to meet the specification.

**Grinding limit: *0.2 mm (.008 in.)**

* Total resurfacing depth of both cylinder head and cylinder block.

**Overall height**

**84 mm (3.31 in.) <12 Valve Engine>**
**120 mm (4.72 in.) <24 Valve Engine>**

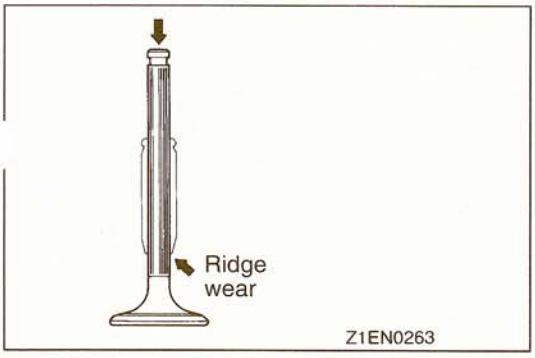


### VALVE

(1) If the valve stem is worn (ridge wear) or otherwise damaged, replace. Also replace the valve if the stem end (that contacts the rocker arm adjusting screw) has a dent.

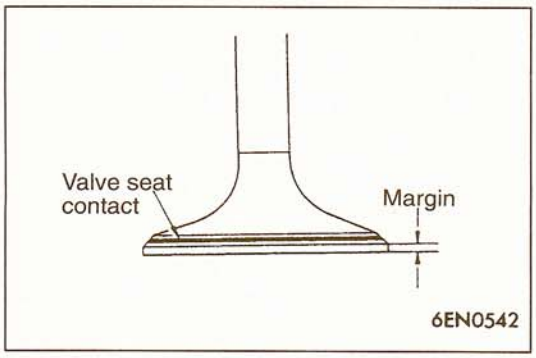


(2) Check the valve face for correct contact. If incorrect, reface using a valve refacer. Valve should make a uniform contact with the seat at the center of valve face.
(3) If the margin exceeds the service limit, replace the valve.

**Standard value**

**<Intake>**
**1.2 mm (.047 in.) <12 Valve Engine>**
**1.0 mm (.039 in.) <24 Valve Engine>**

**<Exhaust>**
**2.0 mm (.079 in.) <12 Valve Engine>**
**1.2 mm (.047 in.) <24 Valve Engine>**

**Limit**

**<Intake>**
**0.7 mm (.028 in.) <12 Valve Engine>**
**0.5 mm (.019 in.) <24 Valve Engine>**

**<Exhaust>**
**1.5 mm (.059 in.) <12 Valve Engine>**
**1.2 mm (.047 in.) <24 Valve Engine>**

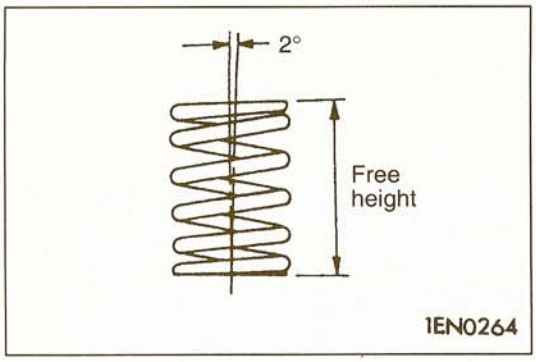


### VALVE SPRINGS

(1) Measure the free height of the spring and, if it is smaller than the limit, replace.

**Standard value**
**49.8 mm (1.96 in.) <12 Valve Engine>**
**51.0 mm (2.01 in.) <24 Valve Engine>**

**Limit**
**48.8 mm (1.92 in.) <12 Valve Engine>**
**50.0 mm (1.97 in.) <24 Valve Engine>**

(2) Measure the squareness of the spring and, if the limit is exceeded, replace.

**Standard value: 2°**

**Limit: Max. 4°**

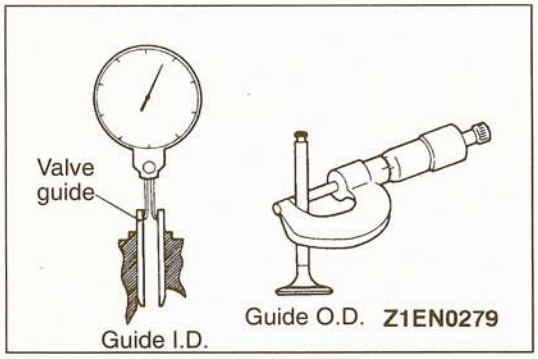


### VALVE GUIDES

(1) Measure the clearance between the valve guide and valve stem. If the limit is exceeded, replace the valve guide or valve, or both.

**Standard value**

**<Intake>**
**0.03–0.06 mm (.0012–.0024 in.) <12 Valve Engine>**
**0.02–0.05 mm (.0008–.0020 in.) <24 Valve Engine>**

**<Exhaust>**
**0.05–0.09 mm (.0020–.0035 in.) <12 Valve Engine>**
**0.04–0.07 mm (.0016–.0028 in.) <24 Valve Engine>**

**Limit**

**<Intake>**
**0.10 mm (.004 in.)**

**<Exhaust>**
**0.15 mm (.006 in.)**

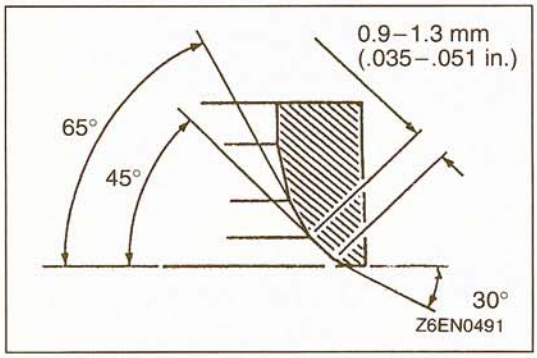


## VALVE SEAT RECONDITIONING PROCEDURE

(1) Before correcting the valve seat, check for clearance between the valve guide and valve and, if necessary, replace the valve guide.
(2) Using the special tool or seat grinder, correct to obtain the specified seat width and angle.
(3) After correction, valve and valve seat should be lapped with a lapping compound.

**TSB Revision**

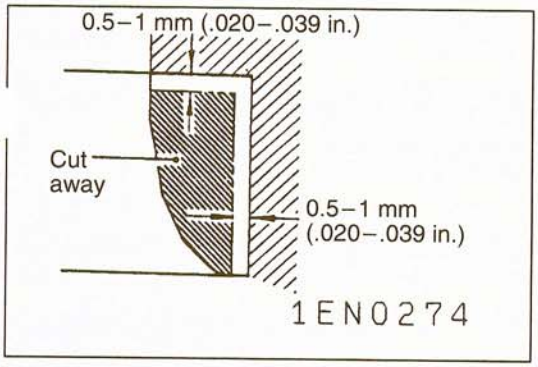


## VALVE SEAT REPLACEMENT PROCEDURE

(1) Cut the valve seat to be replaced from the inside to thin the wall thickness. Then, remove the valve seat.

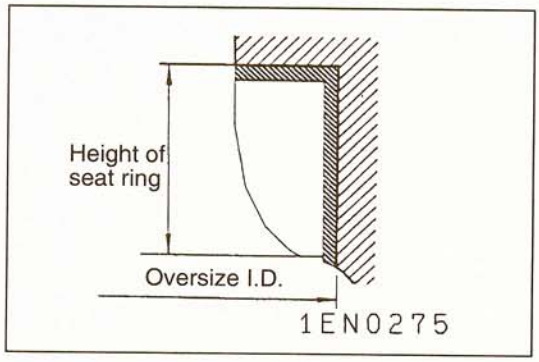


(2) Rebore the valve seat hole in the cylinder head to a selected oversize valve seat diameter.

**Seat ring hole diameter:**
**See "Rework Dimensions" on page 11B-7.**

(3) Before fitting the valve seat, either heat the cylinder head up to approximately 250°C (482°F) or cool the valve seat in liquid nitrogen, to prevent the cylinder head bore from galling.

(4) Using a valve seat cutter, correct the valve seat to the specified width and angle.
See "VALVE SEAT RECONDITIONING PROCEDURE".

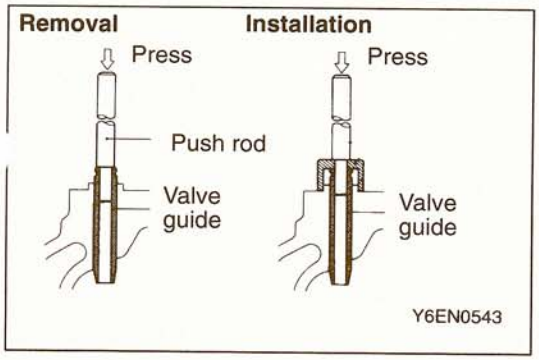


## VALVE GUIDE REPLACEMENT PROCEDURE

**<12 VALVE ENGINE>**

(1) Remove the snap ring from the exhaust valve guide.

(2) Using the push rod and a press, remove the valve guide toward the cylinder head gasket surface.

(3) Rebore the valve guide hole to the new oversize valve guide outside diameter.

**Valve guide hole diameter:**
**See "Rework Dimensions" on page 11B-7.**

**Caution**
**Do not install a valve guide of the same size again.**

(4) Using the special tool, press-fit the valve guide, working from the cylinder head top surface.

(5) After installing valve guides, insert new valves in them to check for sliding condition.

(6) When valve guides have been replaced, check for valve contact and correct the valve seats as necessary.

**<24 VALVE ENGINE>**

(1) Remove the snap ring fom the exhaust valve guide. (24 Valve Engine)
(2) Using the press, remove the valve guide toward th cylinder block.
(3) Rebore the valve guide hole of the cylinder head so that it may fit to the press-fitted oversize valve guide.

**Caution**
**Do not install a valve guide of the same size again.**

**Valve guide hole diameter:**
**See "Rework Dimensions" on page 11B-7.**

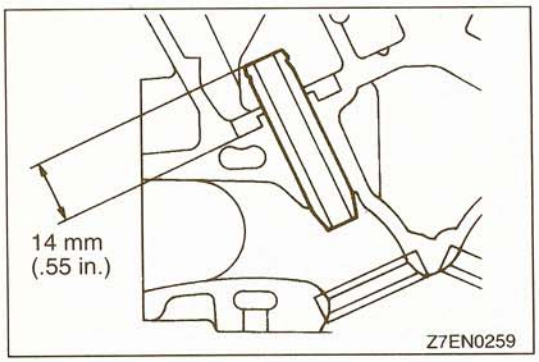


(4) Press-fit the valve guide until it protrude 14 mm (.55 in.) <24 Valve Engine> from the cylinder head top surface as shown in the illustration.

NOTE
1. When press-fitting the valve guide, work from th cylinder head top surface.
2. Pay attention to the difference in length of the valve guides. [intake side: 45.5 mm (1.79 in.); exhaust side: 50.5 mm (1.99 in.)]
3. After installing the valve guides, insert new valves in them to check for sliding condition.

# OIL PAN AND OIL PUMP

11300810058

## REMOVAL AND INSTALLATION <12 VALVE ENGINE>

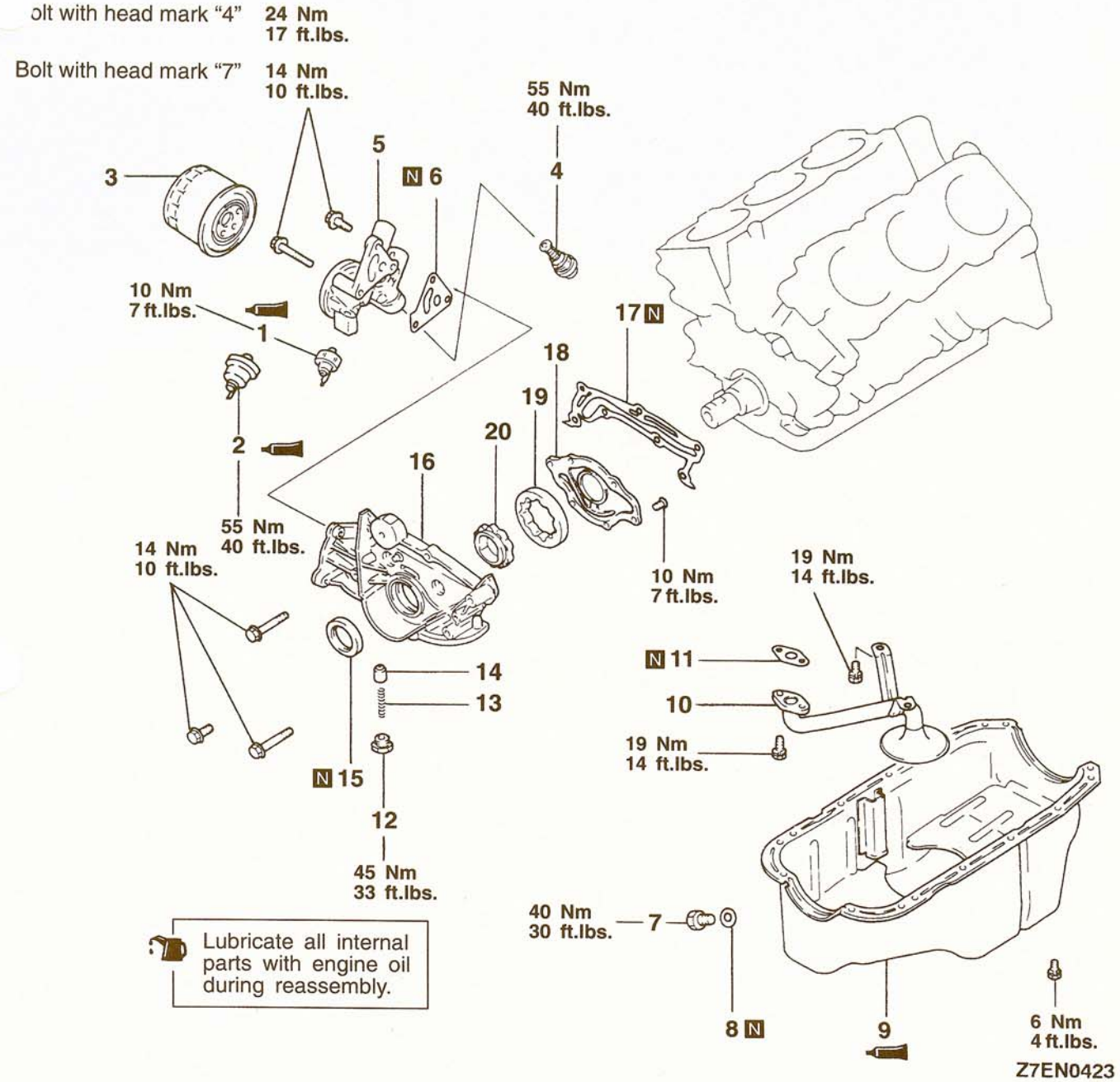


Lubricate all internal parts with engine oil during reassembly.

**Removal steps**

- ▶J◀ 1. Oil pressure switch
- ▶I◀ 2. Oil pressure gauge unit
- ▶H◀ 3. Oil filter
- 4. Oil cooler by-pass valve
- 5. Oil filter bracket
- 6. Oil filter bracket gasket
- 7. Drain plug
- ▶G◀ 8. Drain plug gasket
- ◀A▶ ▶D◀ 9. Oil pan
- 10. Oil screen
- 11. Oil screen gasket
- 12. Plug
- 13. Relief spring
- 14. Relief plunger
- ▶C◀ 15. Crankshaft oil seal
- 16. Oil pump case
- 17. Oil pump gasket
- 18. Oil pump cover
- ◀D▶ ▶A◀ 19. Oil pump outer rotor
- ◀D▶ ▶A◀ 20. Oil pump inner rotor

TSB Revision

## REMOVAL AND INSTALLATION <24 VALVE ENGINE>

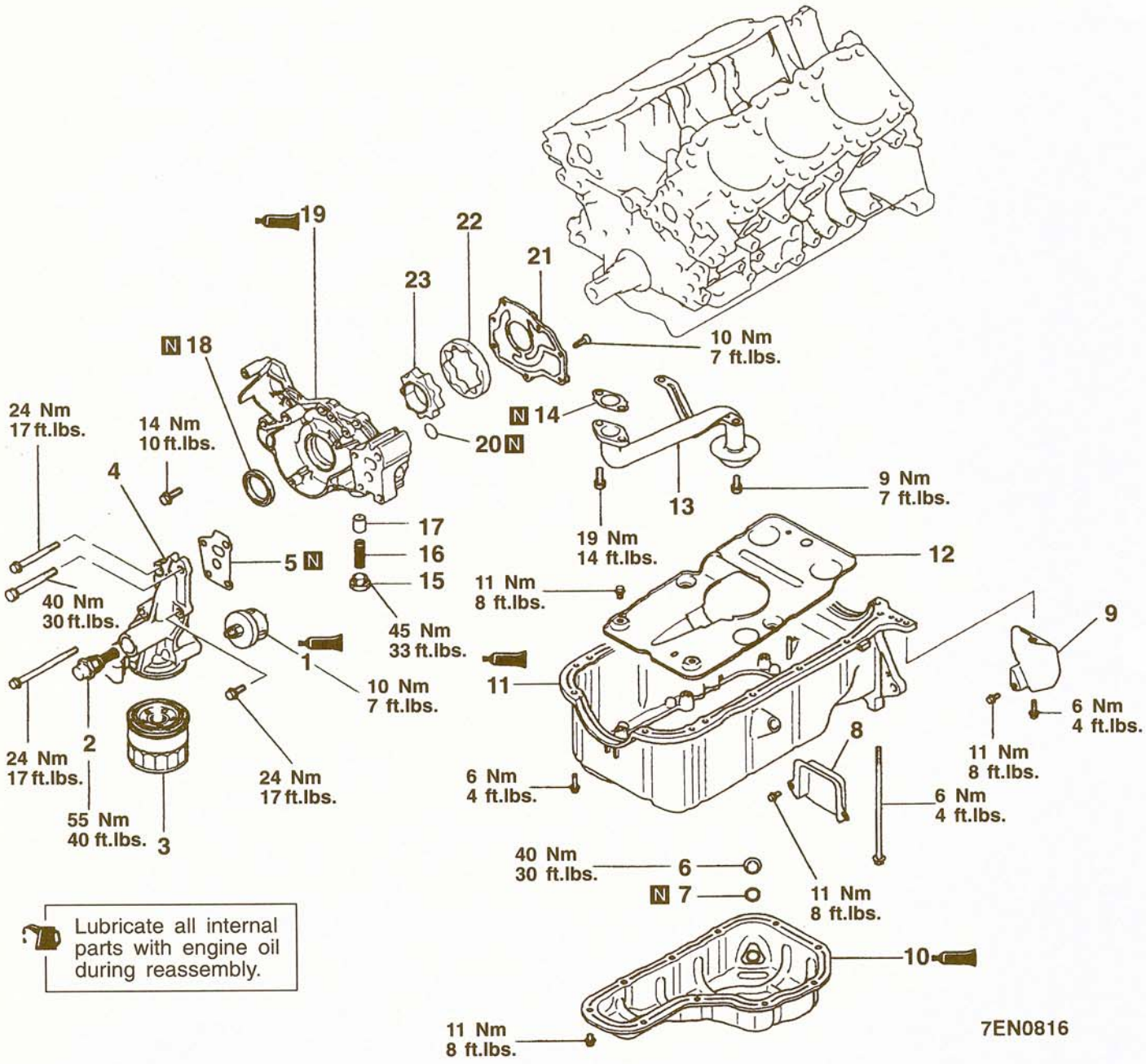


**Removal steps**

- ▶I◀ 1. Oil pressure gauge unit
- 2. Oil cooler by-pass valve
- ▶H◀ 3. Oil filter
- 4. Oil filter bracket
- 5. Oil filter bracket gasket
- 6. Drain plug
- ▶G◀ 7. Drain plug gasket
- 8. Cover
- 9. Cover
- ◀B▶ ▶F◀ 10. Oil pan, lower
- ◀C▶ ▶E◀ 11. Oil pan, upper
- 12. Baffle plate
- 13. Oil screen
- 14. Oil screen gasket
- 15. Plug
- 16. Relief spring
- 17. Relief plunger
- ▶C◀ 18. Crankshaft oil seal
- ▶B◀ 19. Oil pump case
- 20. O-ring
- 21. Oil pump cover
- ◀D▶ ▶A◀ 22. Oil pump outer rotor
- ◀D▶ ▶A◀ 23. Oil pump inner rotor

**TSB Revision**

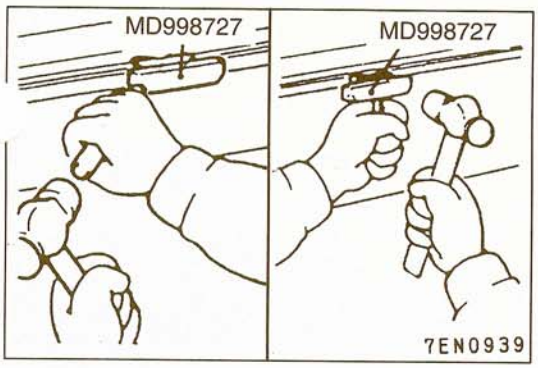


## REMOVAL SERVICE POINT

### ◀A▶ OIL PAN REMOVAL

(1) Knock the special tool deeply between the oil pan and the cylinder block.
(2) Hitting the special tool on the side, slide it along the oil pan to remove it.

### ◀B▶ OIL PAN LOWER REMOVAL

**Caution**
**Do not use a scraper or special tool to remove the oil pan.**

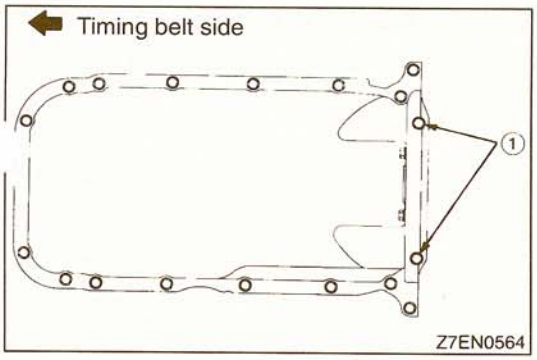


### ◀C▶ OIL PAN, UPPER REMOVAL

(1) Remove the bolts 1 shown in the illustration.
(2) Remove all other bolts.

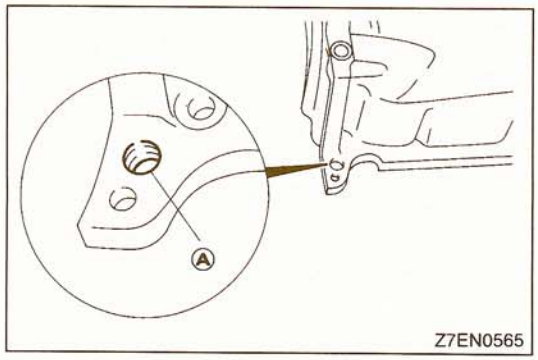


(3) Thread the bolt into the illustrated bolt hole A (at each end) to float and remove the oil pan.

**Caution**
**Do not use a scraper or special tool to remove the oil pan.**

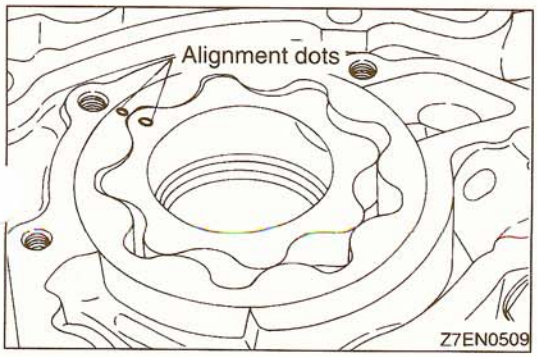


### ◀D▶ OUTER ROTOR/INNER ROTOR REMOVAL

(1) Make alignment dots on the outer and inner rotors for reference in reassembly.

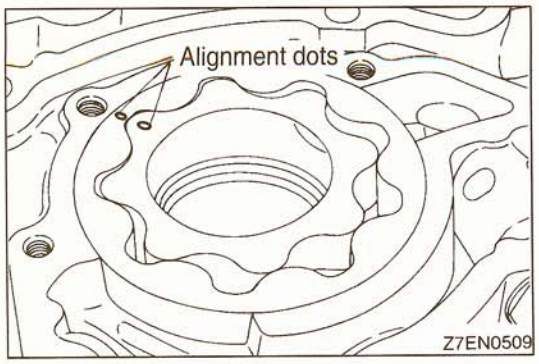


## INSTALLATION SERVICE POINTS

### ▶A◀ INNER ROTOR/OUTER ROTOR INSTALLATION

(1) Apply engine oil to the rotors. Then, install the roto ensuring that the alignment dots made at disassembly are properly aligned.

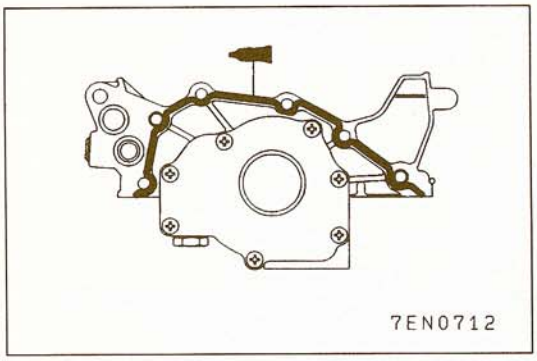


### ▶B◀ OIL PUMP CASE INSTALLATION

(1) Remove the sealant from the cylinder block (oil pump mounting plane) and oil pump
(2) Apply a 3 mm (.118 in.) diameter bead of sealant to the oil pump case. Be sure to install the oil pan quickly while the sealant is wet (within 15 minutes).
(3) After installation, keep the sealed area away from the oil and coolant for approx. 1 hour.

**Specified sealant:**
**MITSUBISHI GENUINE Part No. MD970389 or equivalent**

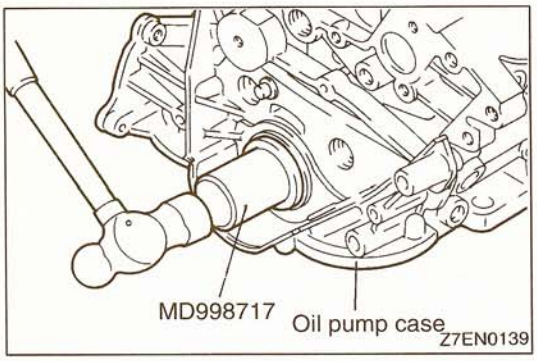


### ▶C◀ CRANKSHAFT FRONT OIL SEAL INSTALLATION

(1) Using the special tool, knock the oil seal into the oil pump case.

NOTE
Knock it as far as it goes.

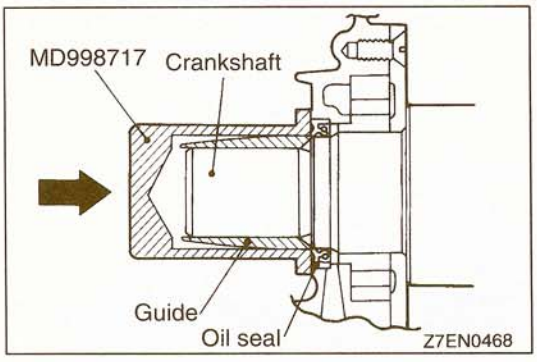

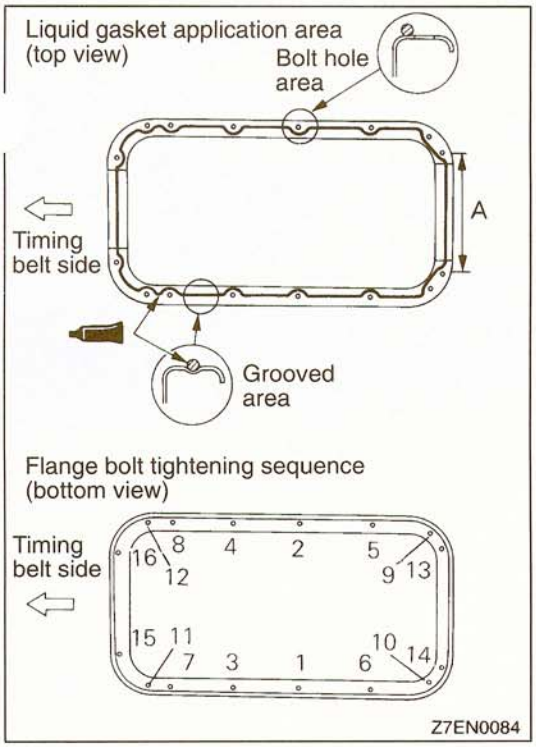


### ▶D◀ OIL PAN INSTALLATION

(1) Clean the gasket surfaces of the cylinder block and oil pan.
(2) Apply a 4 mm (.157 in.) diameter bead of sealant to the oil pump case. Be sure to install the oil pan quickly while the sealant is wet (within 15 minutes).
(3) After installation, keep the sealed area away from the oil and coolant for approx. 1 hour.

**Caution**
**When installing the oil pan, be sure not to expel the sealant from the oil pan flange at portion A in the illustration.**

**Specified sealant:**
**MITSUBISHI GENUINE Part No. MD970389 or equivalent**

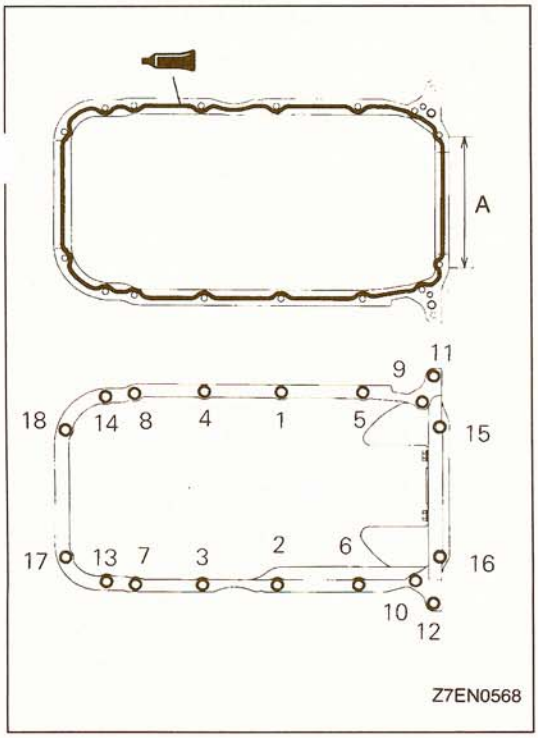


### ▶E◀ OIL PAN, UPPER INSTALLATION

(1) Clean the gasket surfaces of the cylinder block and upper oil pan.
(2) Apply a 4 mm (.157 in.) diameter bead of sealant to the oil pump case. Be sure to install the oil pan quickly while the sealant is wet (within 15 minutes).
(3) After installation, keep the sealed area away from the oil and coolant for approx. 1 hour.

**Caution**
**When installing the upper oil pan, be sure not to expel the sealant from the oil pan flange at portion A in the illustration.**

**Specified sealant:**
**MITSUBISHI GENUINE Part No. MD970389 or equivalent**

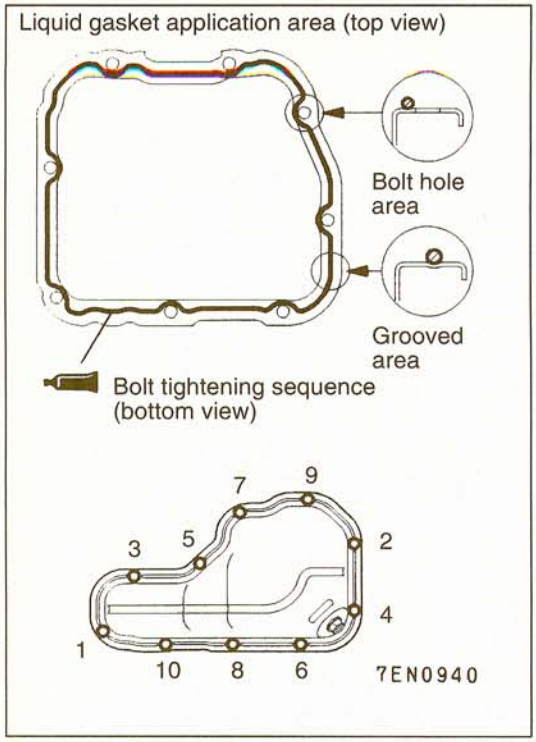


### ▶F◀ LOWER OIL PAN INSTALLATION

(1) Clean the gasket surfaces of the upper and lower oil pans.
(2) Apply a 4 mm (.157 in.) diameter bead of sealant the oil pump case. Be sure to install the oil pan quickly while the sealant is wet (within 15 minutes).
(3) After installation, keep the sealed area away from the oil and coolant for approx. 1 hour.

**Specified sealant:**
**MITSUBISHI GENUINE Part No. MD970389 or equivalent**

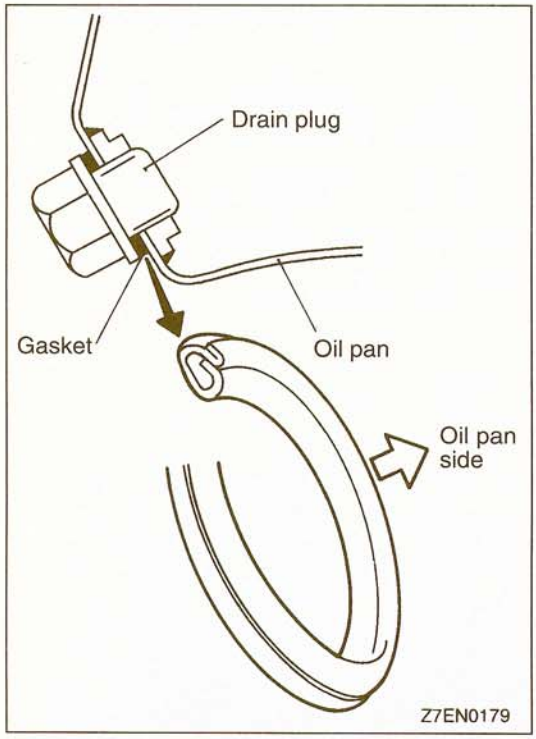


### ▶G◀ DRAIN PLUG GASKET INSTALLATION

(1) Install the drain plug gasket as illustrated.

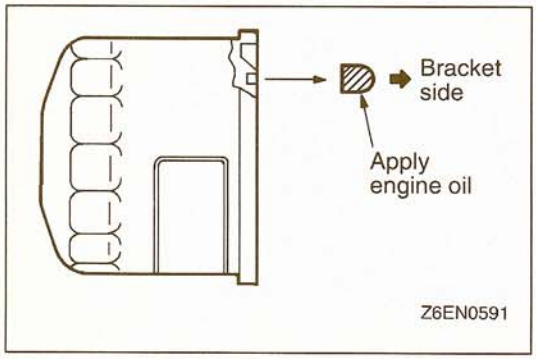


### ▶H◀ OIL FILTER INSTALLATION

(1) Clean the installation surface of the filter bracket.
(2) Apply engine oil to the O-ring of the oil filter.
(3) Screw the oil filter on until the O-ring contacts the bracket. Then tighten 3/4 turn [14 Nm (10 ft.lbs)].

**TSB Revision**

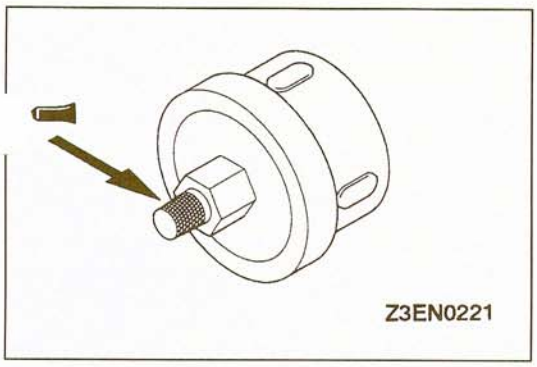


### ▶I◀ SEALANT APPLICATION TO OIL PRESSURE GAUGE UNIT

(1) Coat the threads of the gauge unit with sealant and install it using the special tool.

**Specified sealant:**
**3M ATD Part No.8660 or equivalent**

**Caution**
**1. Keep the end of threaded portion clear of sealant.**
**2. Avoid an overtightening.**

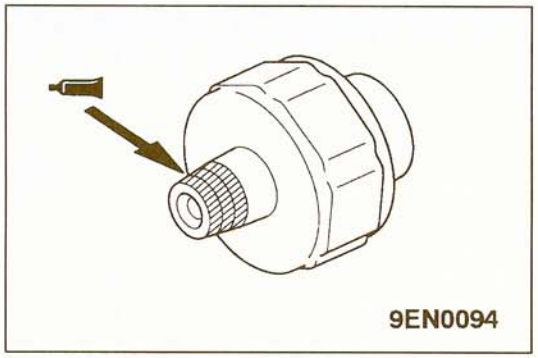


### ▶J◀ SEALANT APPLICATION TO OIL PRESSURE SWITCH

(1) Coat the threads of the switch with sealant and install the switch using the special tool.

**Specified sealant:**
**3M ATD Part No.8660 or equivalent**

**Caution**
**1. Keep the end of threaded portion clear of sealant.**
**2. Avoid an overtightening.**

## INSPECTION

11300820051

### OIL PUMP

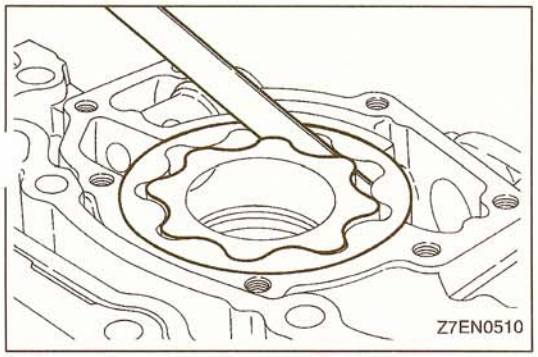


(1) Check the tip clearance.

**Standard value: 0.06–0.18 mm (.0024–.0071 in.)**

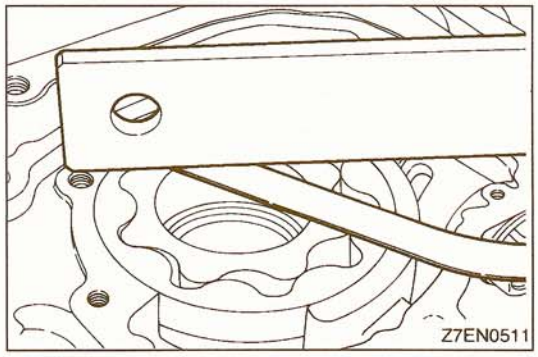


(2) Check the side clearance.

**Standard value: 0.04–0.10 mm (.0016–.0039 in.)**

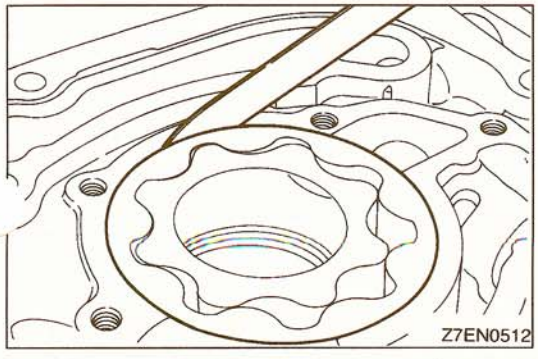


(3) Check the body clearance.

**Standard value: 0.10–0.18 mm (.0040–.0070 in.)**

**Limit: 0.35 mm (.0138 in.)**

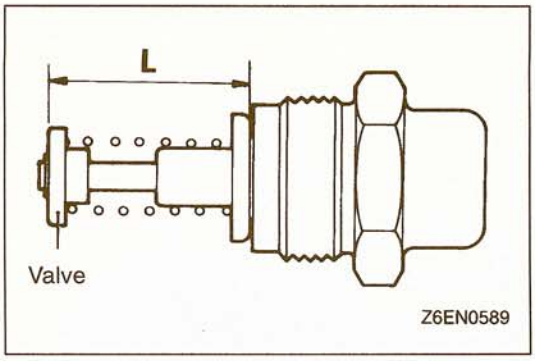


### OIL COOLER BYPASS VALVE

(1) Make sure that the valve moves smoothly.
(2) Ensure that the dimension L measures the standard valu under normal temperature and humidity.

**Dimension L: 34.5 mm (1.358 in.)**

(3) The dimension must be the standard value when measured after the valve has been dipped in 100°C (212°F) oil.

**Dimension L: 40 mm (1.57 in.) or more**

# PISTON AND CONNECTING ROD

11300840132

## REMOVAL AND INSTALLATION

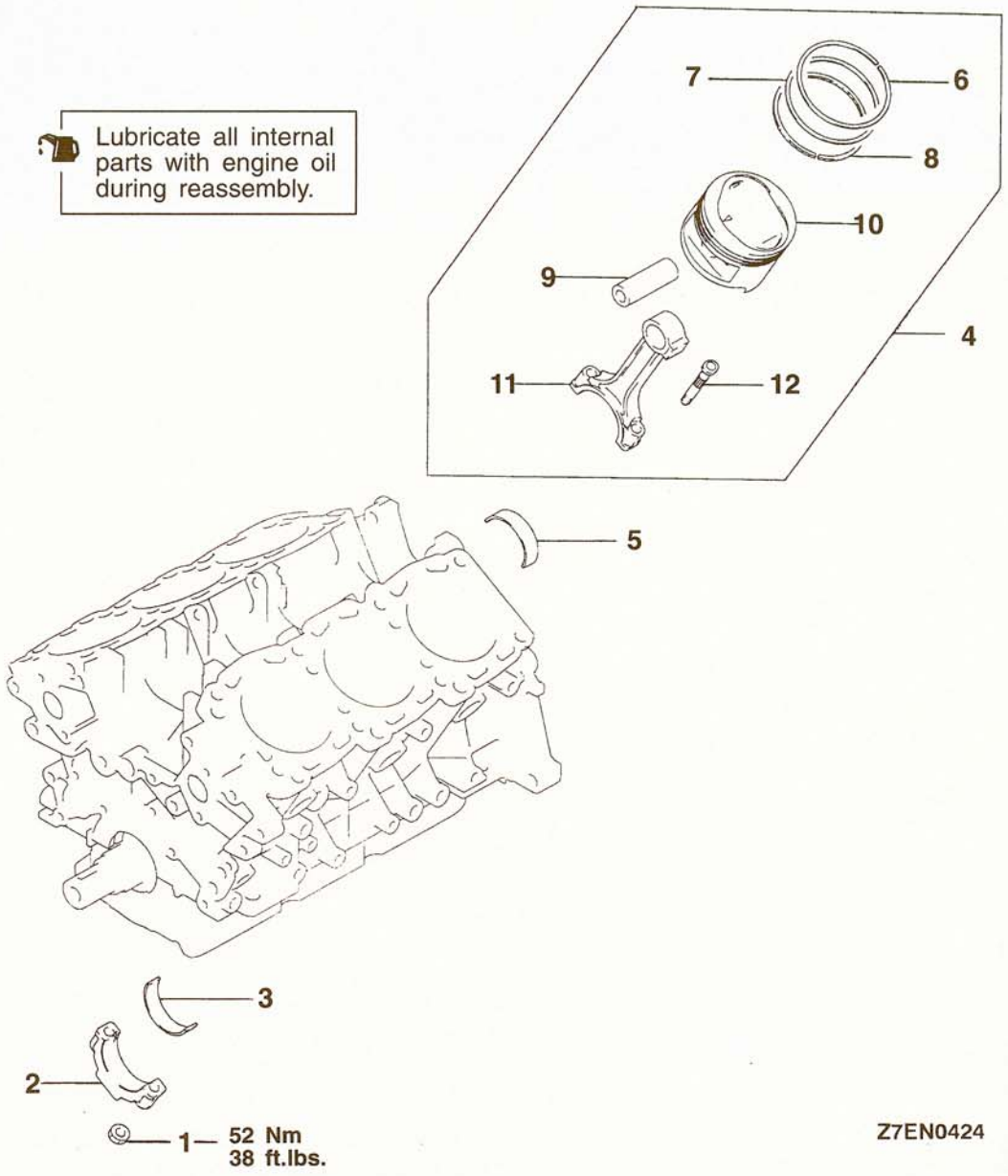


**Removal steps**

1. Nut
◀A▶ ▶E◀ 2. Connecting rod cap
3. Connecting rod bearing, lower
▶D◀ 4. Piston and connecting rod assembly
5. Connecting rod bearing, upper
▶C◀ 6. Piston ring No.1
▶C◀ 7. Piston ring No.2
▶B◀ 8. Oil ring
◀B▶ ▶A◀ 9. Piston pin
10. Piston
11. Connecting rod
12. Bolt

TSB Revision

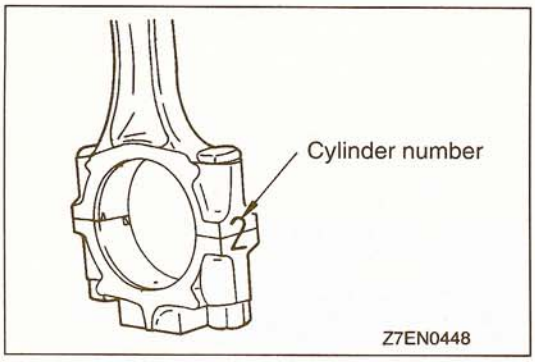


## REMOVAL SERVICE POINTS

### ◀A▶ CONNECTING ROD CAP REMOVAL

(1) Mark the cylinder number on the side of the connecting rod big end for correct reassembly.
(2) Keep the removed connecting rods, caps, and bearings in order according to the cylinder number.

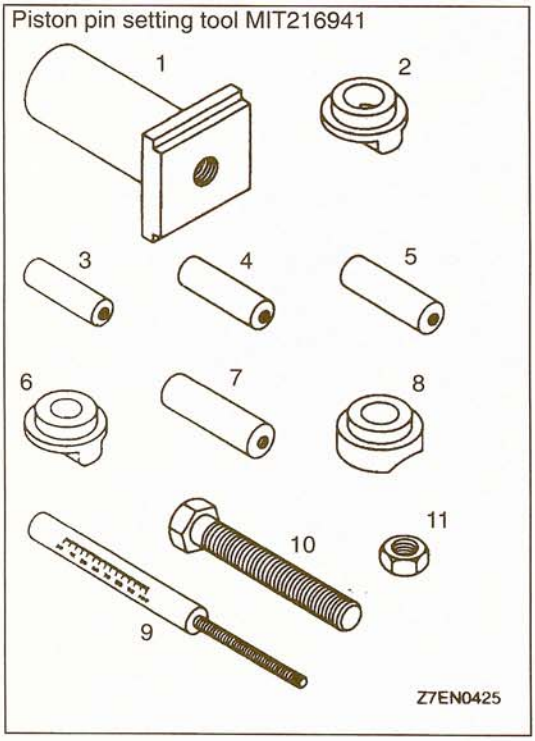


### ◀B▶ PISTON PIN REMOVAL

| Item No. | Part No. | Description |
|---|---|---|
| 1 | MIT310134 | Base |
| 2 | MIT310136 | Piston Support |
| 3 | MIT310137 | Connecting Rod Guide Pin |
| 4 | MIT310138 | Connecting Rod Guide Pin |
| 5 | MIT310139 | Connecting Rod Guide Pin |
| 6 | MIT310140 | Piston Support |
| 7 | MIT310141 | Connecting Rod Guide Pin |
| 8 | MIT310142 | Piston Support |
| 9 | MIT48143 | Press Pin |
| 10 | 216943 | Stop Screw |
| 11 | 10396 | Nut |

(1) Remove the stop screw from the base.
(2) Select the correct piston support for your application. (See above) Fit the piston support onto the base. Place the base on the press support blocks.
(3) Insert the press pin through the piston pin hole. Select the correct connecting rod guide pin. (See above.) Thread the guide pin onto the threaded portion of the press pin.
(4) Position the piston assembly on the piston support in the press. With the press pin up as shown in the illustration, insert the guide pin through the hole in the piston and through the hole in the piston support.
(5) Press the piston pin out of the assembly.

**IMPORTANT: To avoid piston damage,**
- **The piston support must seat squarely against the piston.**
- **Verify that the piston pin will slide through the hole in the piston support.**

(6) Remove the piston pin from the piston pin.

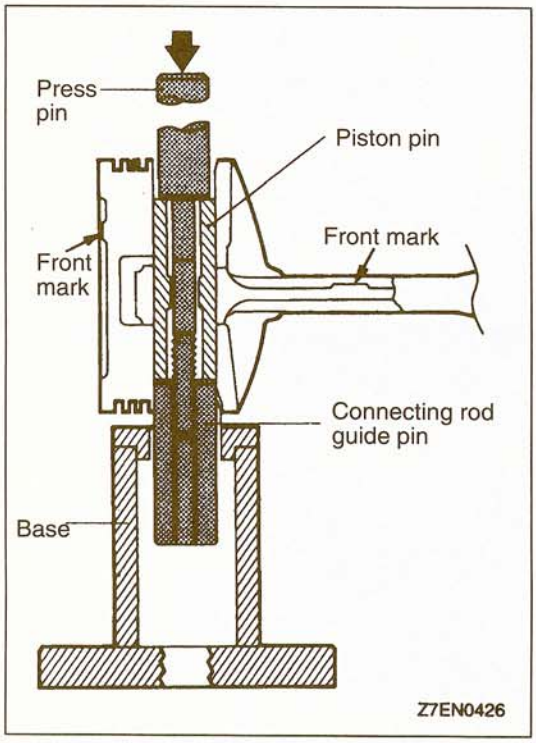


TSB Revision

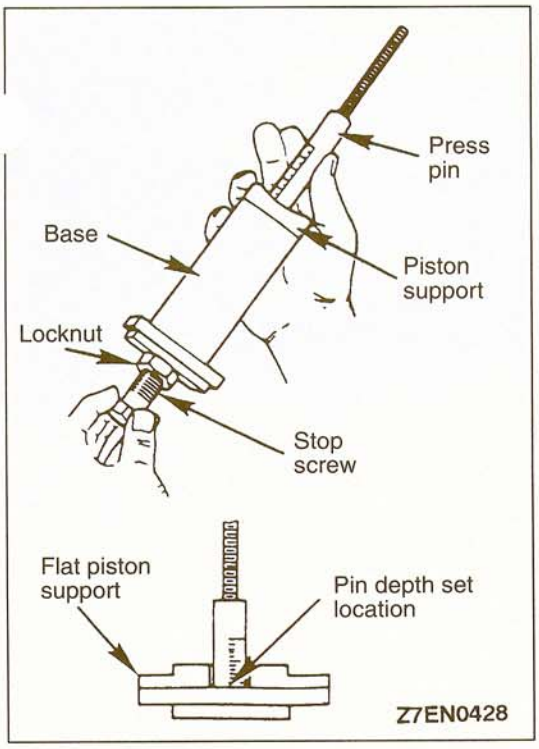


## INSTALLATION SERVICE POINTS

### ▶A◀ PISTON PIN INSTALLATION

(1) Thread the stop screw and lock nut assembly into the base. Fit the correct piston support on the top of the base. Insert the press pin, threaded end up, into the hole in the piston support until the press pin touches the stop screw.
(2) Using the graduations on the press pin, adjust the stop screw to the depth.

**Depth: 60 mm**

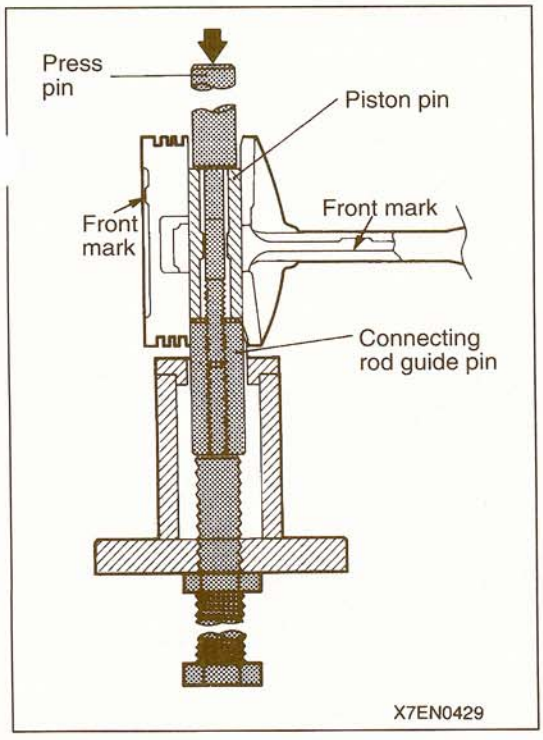


(3) Place the base on the press support blocks.
(4) Slide the piston pin over the threaded end of the press pin, and thread the correct guide pin up against it.
(5) Coat the piston pin with oil, and with the connecting rod held in position, slide the guide pin through the piston and connecting rod.
(6) Press the piston pin through the connecting rod until the guide pin contacts the stop screw.
(7) Remove the piston assembly from the base. Remove the guide pin and press pin from the assembly.

**IMPORTANT:**
**Due to production tolerance variations, it is necessary to visually inspect the piston pin depth after installation to verify that the piston pin is centered. Adjust if necessary.**

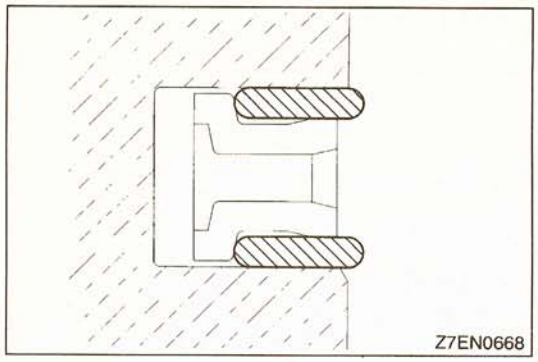


### ▶B◀ OIL RING INSTALLATION

(1) Fit the oil ring spacer into the piston ring groove.

NOTE
The side rails and spacer may be installed in either direction.

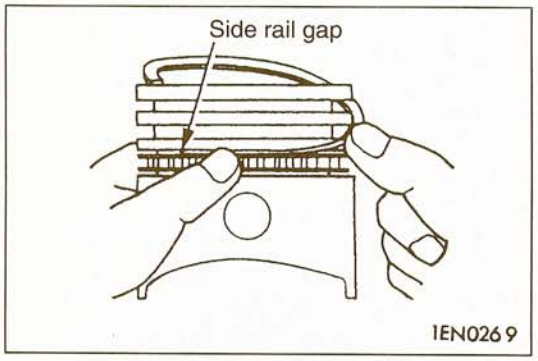


(2) Install the upper side rail
To install the side rail, first fit one end of the rail into the piston groove, then press the remaining portion into the position by finger. See illustration.
Use of a ring expander to expand the side rail end gap can break the side rail, unlike other piston rings.

NOTE
Do not use any piston ring expander when installing the side rail.

(3) Install the lower side rail in the same procedure as described in step (2).
(4) Make sure that the side rails move smoothly in either direction.

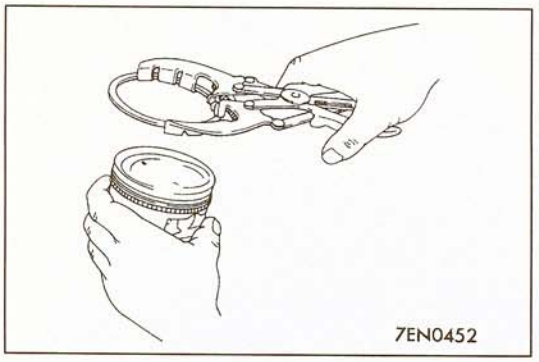


### ▶C◀ PISTON RING NO.2/PISTON RING NO.1 INSTALLATION

(1) Using a piston ring expander, fit No.2 and then No.1 piston ring into position.

NOTE
(1) The ring end is provided with the identification mark.

| | | Identification mark |
|---|---|---|
| No. 1 ring | 12 Valve Engine | 1R |
| | 24 Valve Engine | T |
| No. 2 ring | 12 Valve Engine | 2R |
| | 24 Valve Engine | T2 |

(2) Install piston rings with identification mark facing up, to the piston crown side.

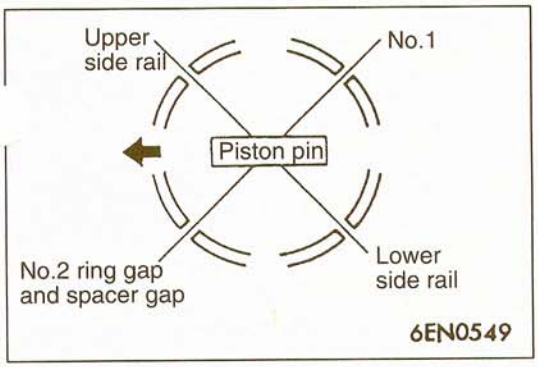


## ▶D◀ PISTON AND CONNECTING ROD INSTALLATION

(1) Liberally coat the circumference of the piston, piston ring, and oil ring with engine oil.
(2) Arrange the piston ring and oil ring gaps (side rail and spacer) as shown in the illustration.
(3) Rotate the crankshaft so that the crank pin is on the center of the cylinder bore.

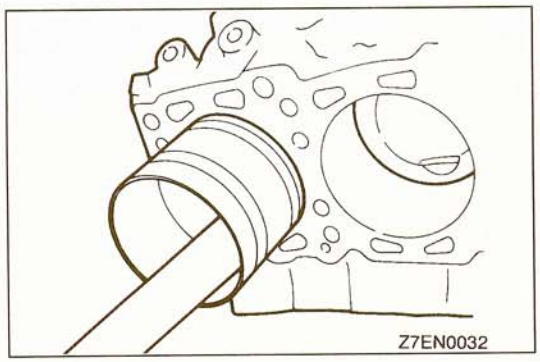


(4) Use suitable thread protectors on the connecting rod bolts before inserting the piston and connecting rod assembly into the cylinder block.
Care must be taken not to nick the crank pin.
(5) Using a suitable piston ring compressor tool, install the piston and connecting rod assembly into the cylinder block.

**Caution**
**Install the piston with the front mark (arrow mark) on the top of the piston directed towards the engine front (timing belt side).**

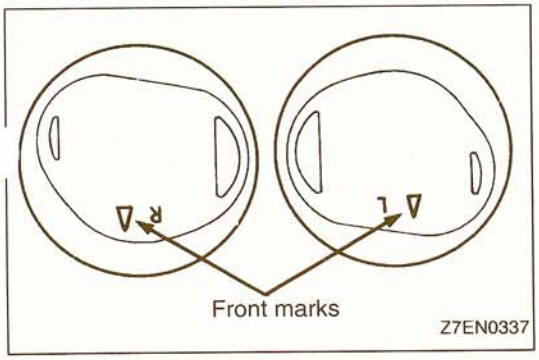


NOTE
Two types of pistons, one for cylinders 1, 3 and 5 and the other for cylinders 2, 4 and 6, have been used.
Piston with R: For cylinders 1, 3 and 5
Piston with L: For cylinders 2, 4 and 6

## ▶E◀ CONNECTING ROD CAP INSTALLATION

(1) Mate the correct bearing cap with the correct connecting rod by checking with the alignment marks marked during disassembly. If a new connecting rod is used which has no alignment mark, position the notches for locking the bearing on the same side.

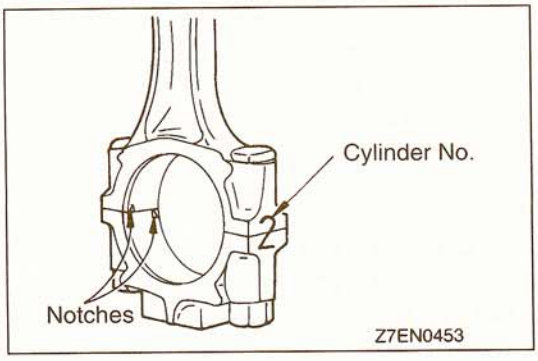


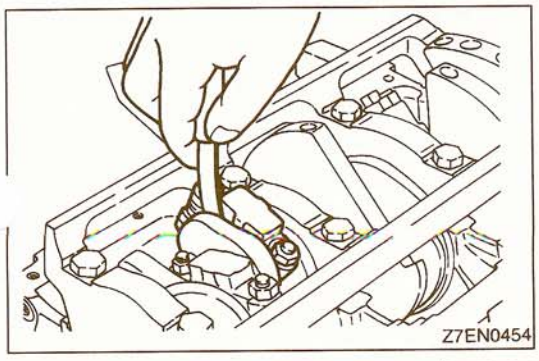


(2) Check if the thrust clearance in the connecting rod big end is correct.

**Standard value: 0.10–0.25 mm (.0039–.0098 in.)**

**Limit: 0.4 mm (.016 in.)**

## INSPECTION

11300850135

### PISTON

(1) Replace the piston if scratches or seizure is evident on its surfaces (especially the thrust surface). Replace the piston if it is cracked.

### PISTON PIN

(1) Insert the piston pin into the piston pin hole with a thumb. You should feel a slight resistance. Replace the piston pin if it can be easily inserted or there is an excessive play.
(2) The piston and piston pin must be replaced as an assembly.

### PISTON RING

(1) Check the piston ring for damage, excessive wear, and breakage and replace if defects are evident. If the piston has been replaced with a new one, the piston rings must also be replaced with new ones.

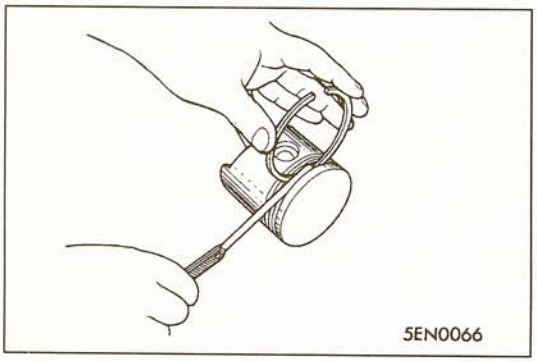


(2) Check for clearance between the piston ring and ring groove. If the limit is exceeded, replace the ring or piston, or both.

**Standard value:**
**No. 1 0.03–0.07 mm (.0012–.0028 in.)**
**No. 2 0.02–0.06 mm (.0008–.0024 in.)**

**Limit: 0.1 mm (.004 in.)**

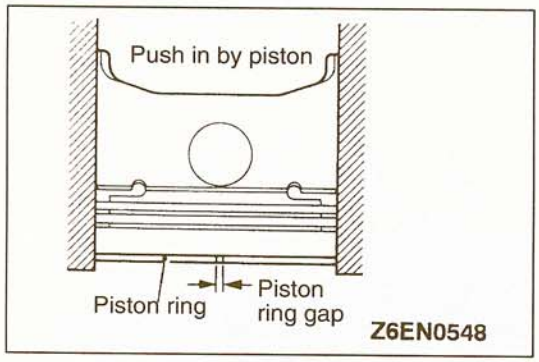


(3) Insert the piston ring into the cylinder bore. Force the ring down with a piston, the piston crown being in contact with the ring, to correctly position it at right angles to the cylinder wall. Then, measure the end gap with a feeler gauge.
If the ring gap is excessive, replace the piston ring.

**Standard value:**
**No. 1: 0.30–0.45 mm (.0118–.0177 in.)**
**No. 2: 0.45–0.60 mm (.0177–.0236 in.)**
**Oil 0.20–0.60 mm (.0079–.0236 in.)**

**Limit:**
**No. 1, No. 2: 0.8 mm (.031 in.)**
**Oil: 1.0 mm (.039 in.)**

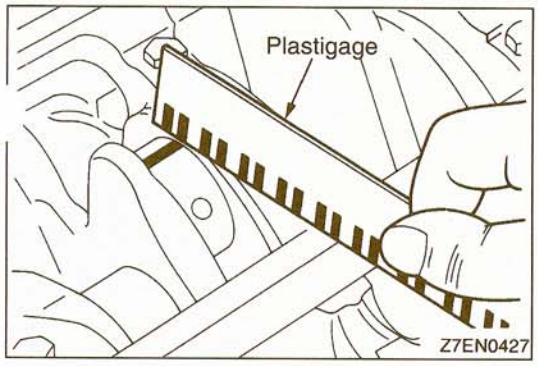


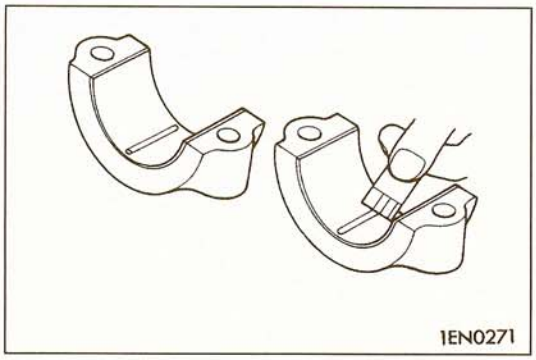


## CRANKSHAFT PIN OIL CLEARANCE (PLASTIGAGE METHOD)

The crankshaft oil clearance can be measured easily by using Plastigage, as follows:

(1) Remove oil and grease and any other foreign matters from the crankshaft pin and the bearing inner surface.
(2) Install the crankshaft.
(3) Cut Plastigage to the same length as the width of the bearing and place it on the pin in parallel with its axis.
(4) Gently place the crankshaft bearing cap over it and tighten the bolts to the specified torque.
(5) Remove the bolts and gently remove the crankshaft bearing cap.
(6) Measure the width of the smashed Plastigage at its widest section by using a scale printed on the Plastigage bag.

**Standard value: 0.02–0.05 mm (.0008–.0020 in.)**

**Limit: 0.1 mm (.004 in.)**

# CRANKSHAFT, FLYWHEEL AND DRIVE PLATE

11300870131

## REMOVAL AND INSTALLATION

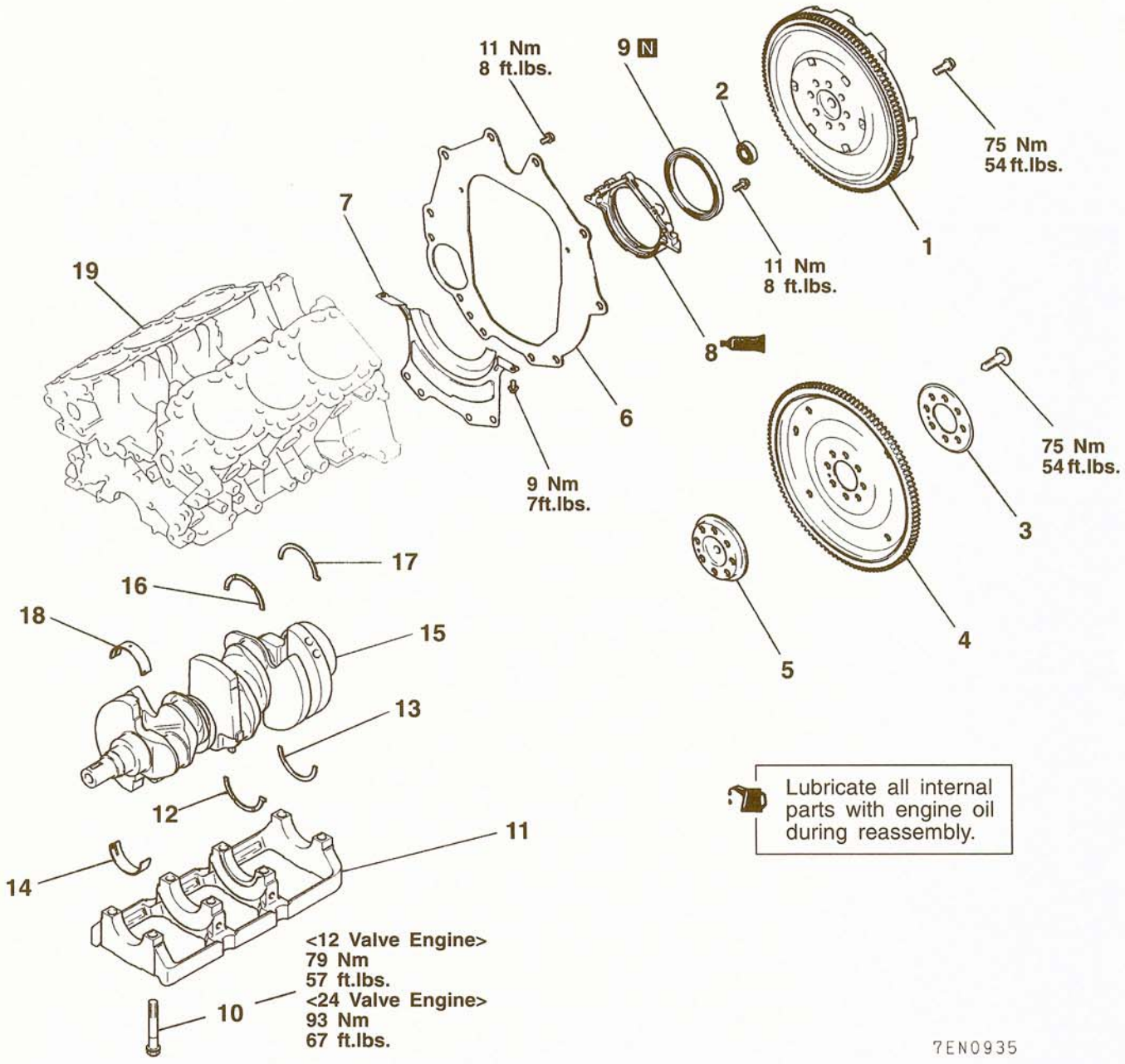


**Removal steps**

1. Flywheel <For M/T>
2. Ball bearing <For M/T>
3. Adaptor plate <For AWD A/T>
4. Drive plate <For AWD A/T>
5. Crankshaft adaptor <For AWD A/T>
6. Rear plate
7. Bell housing cover <Except 24valve engine>
- ▶D◀ 8. Oil seal case
- ▶C◀ 9. Crankshaft rear oil seal
- ▶B◀ 10. Bearing cap bolt
- ▶B◀ 11. Bearing cap
- ▶A◀ 12. Thrust bearing A
- ▶A◀ 13. Thrust bearing B
- ▶A◀ 14. Crankshaft bearing, lower
15. Crankshaft
- ▶A◀ 16. Thrust bearing B
- ▶A◀ 17. Thrust bearing A
- ▶A◀ 18. Crankshaft bearing, upper
19. Cylinder block

**TSB Revision**

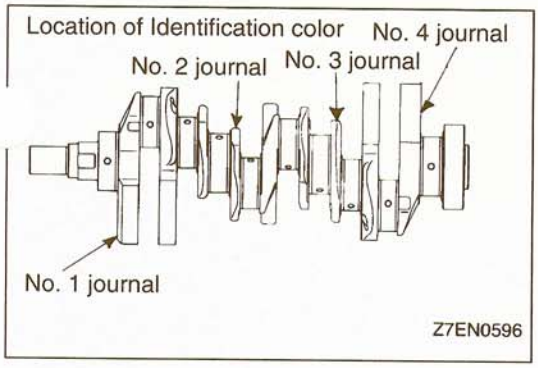


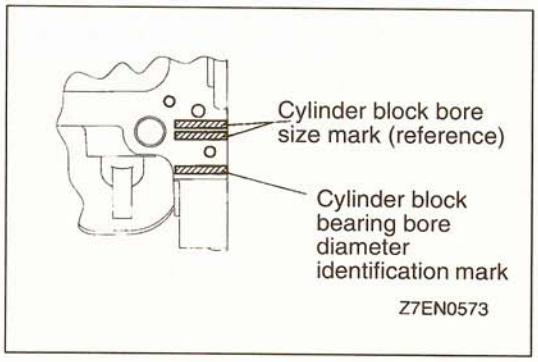


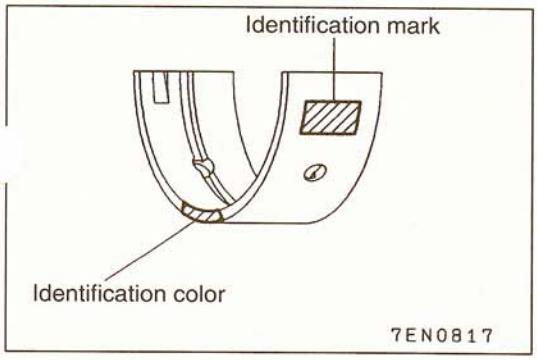


## INSTALLATION SERVICE POINTS

### ▶A◀ CRANKSHAFT BEARING INSTALLATION

When the bearing needs replacing, select and install a proper bearing by the following procedure.

(1) Measure the crankshaft journal diameter and confirm its classification from the following table. In the case of a bearing supplied as a service part, its identification color is painted at the position shown in the illustration.

(2) The cylinder block bearing bore diameter identification marks are stamped at the position shown in the illustration from the front of the engine, beginning at No 1.

| Crankshaft journal | | | | Cylinder block bearing bore diameter | Crankshaft bearing |
|---|---|---|---|---|---|
| Classification | Identification mark (production part) | Identification color (service part) | Outer diameter mm (in.) | Identification mark | Identification color or Identification mark (service part) |
| 1 | None | Yellow | 59.994–60.000 (2.3620–2.3622) | I | Pink, 1 |
| | | | | II | Red, 2 |
| | | | | III | Green, 3 |
| 2 | None | None | 59.988–59.994 (2.3617–2.3620) | I | Red, 2 |
| | | | | II | Green, 3 |
| | | | | III | Black, 4 |
| 3 | None | White | 59.982–59.988 (2.3614–2.3617) | I | Green, 3 |
| | | | | II | Black, 4 |
| | | | | III | Brown, 5 |

(3) Select a proper bearing from the above table on the basis of the identification data confirmed under Items (1) and (2).

[Example]

1) If the measured value of a crankshaft journal outer diameter is 59.996 mm, the journal is classified as "1" in the table. (In case the crankshaft is also replaced by a spare part, check the identification color painted on the new crankshaft. If it is yellow, for example, the journal is classified as "1".

2) Next, check the cylinder block bearing hole identification mark stamped on the cylinder block. If it is "I" , read the "Identification color for the spare bearing" column to find the identification color of the bearing to be used. In this case, it is "pink".

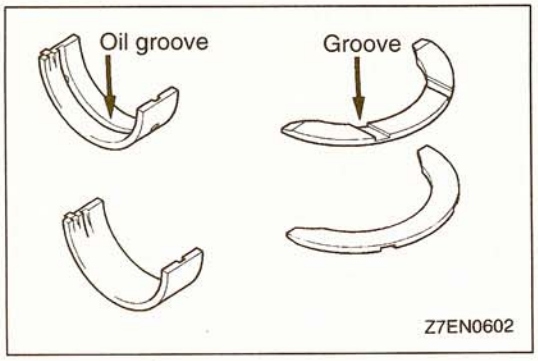


(4) Install the bearing halves with oil groove in the cylinder block side.
(5) Install the bearing halves without oil groove on the bearing cap side.
(6) Install the thrust bearings on both sides of the No.3 bearing with the grooves facing outward.

### ▶B◀ BEARING CAP/BEARING BOLT INSTALLATION

(1) Attach the bearing cap on the cylinder block as shown in the illustration.
(2) Tighten the bearing cap bolts to the specified torque in the sequence shown in the illustration.
(3) Check that the crankshaft rotates smoothly.

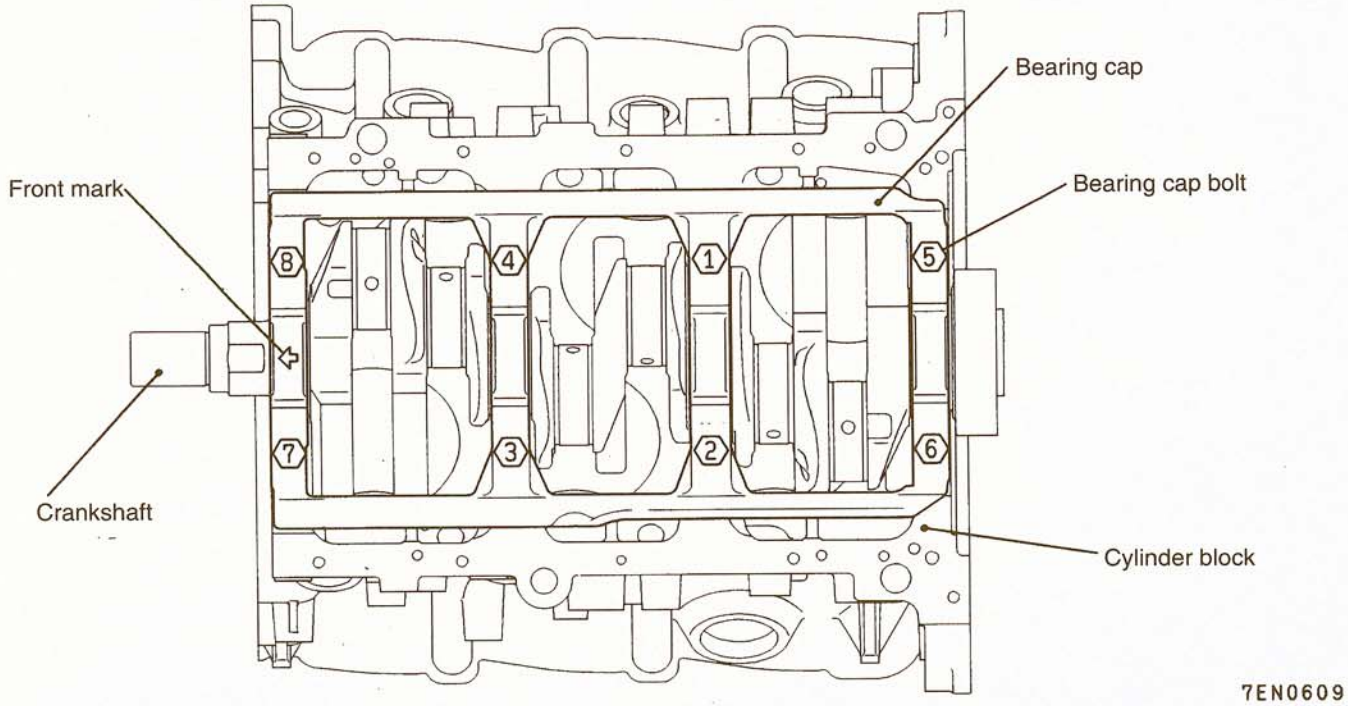


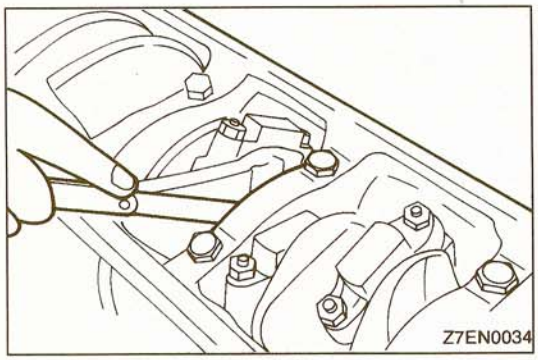


(4) Check the end plate. If it exceeds the limit value, replace the thrust bearing.

**Standard value : 0.05–0.25 mm (.0020–.0098 in.)**

**Limit: 0.3 mm (.012 in.)**

**TSB Revision**

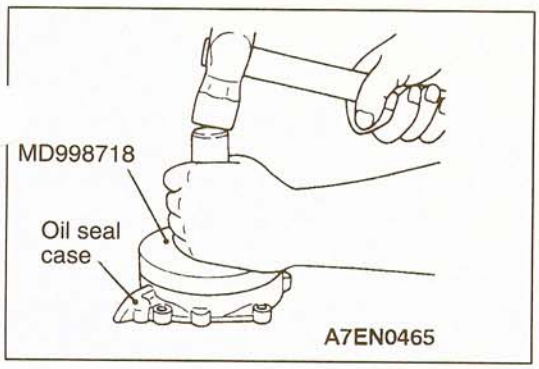


### ▶C◀ CRANKSHAFT REAR OIL SEAL INSTALLATION

(1) Using the special tool, press-fit a new crankshaft rear oil seal into the oil seal case.

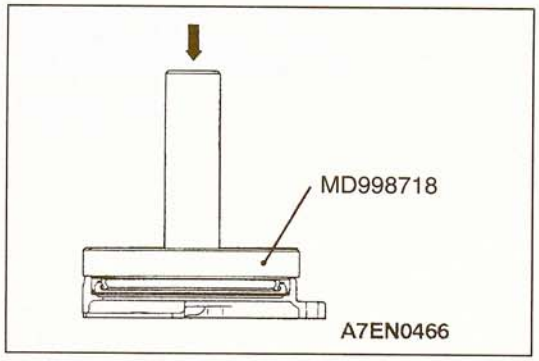


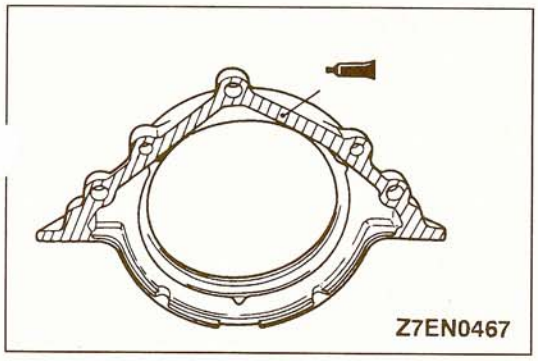


### ▶D◀ OIL SEAL CASE INSTALLATION

(1) Apply specified sealant to the area shown in the illustration.

**Specified sealant:**
**MITSUBISHI GENUINE Part No. MD970389 or equivalent**

(2) Apply a small amount of engine oil to the entire circumference of the oil seal lip section, and place the oil seal on the cylinder block.

## INSPECTION

11300880110

### CRANKSHAFT

If the oil clearance exceeds the limit, replace the bearing, and crankshaft if necessary.

(1) Measure the outside diameter of the journals and the inside diameter of the crankshaft bearings. If the difference between them (oil clearance) exceeds the limit, replace the crankshaft bearing and, if necessary, crankshaft.

**Standard value: 0.02–0.04 mm (.0008–.0020 in.)**

**Limit: 0.1 mm (.004 in.)**

**Caution**
**Do not attempt an undersize machining of the crankshaft with special surface treatment. This crankshaft can be identified by its dull gray appearance.**

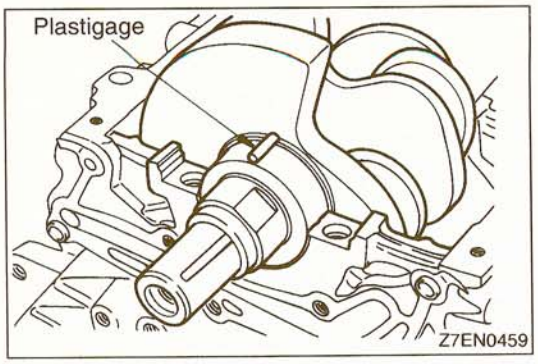


## CRANKSHAFT JOURNAL OIL CLEARANCE <PLASTIGAGE METHOD>

The crankshaft oil clearance can be measured easily by usin Plastigage, as follows:

(1) Remove oil and grease and any other foreign matters from the crankshaft journal and bearing inner surface.
(2) Install the crankshaft.
(3) Cut Plastigage to the same length as the width of the bearing and place it on the journal in parallel with its axis.

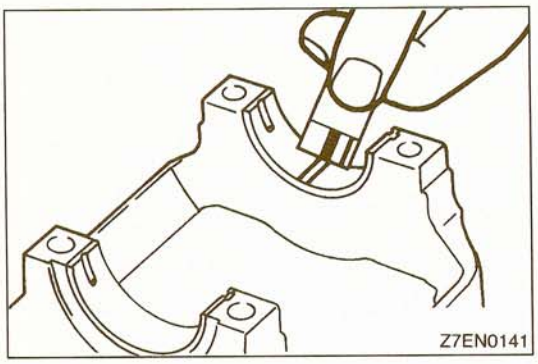


(4) Gently place the crankshaft bearing cap over it and tighten the bolts to the specified torque.
(5) Remove the bolts and gently remove the crankshaft bearing cap.
(6) Measure the width of the smashed Plastigage at its widest section by using a scale printed on the Plastigage bag.

## CRANKSHAFT REAR OIL SEAL

(1) Check the oil seal lip for wear and damage.
(2) Check rubber for deterioration or hardening.
(3) Check the oil seal case for cracks and damage.

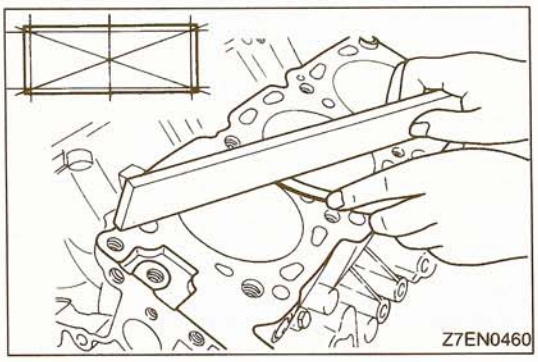


## CYLINDER BLOCK

(1) Visually check for scratches, rust, and corrosion. Use also a flaw detecting agent for the check. If defects are evident, correct, or replace.
(2) Using a straightedge and feeler gauge, check the block top surface for warpage. Make sure that the surface is free from gasket chips and other foreign matter.

**Standard value: 0.05 mm (.002 in.)**

**Limit: 0.1 mm (.004 in.)**

(3) If the distortion is excessive, correct within the allowable limit or replace.

**Grinding limit: 0.2 mm (.008 in.)**
***Includes/combined with cylinder head grinding.**

**Cylinder block height (when new):**
**210.4–210.6 mm (8.283–8.291 in.)**

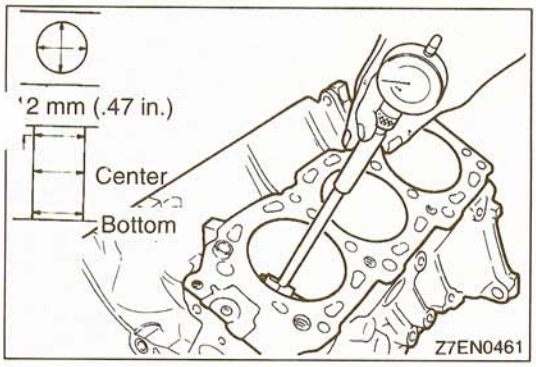


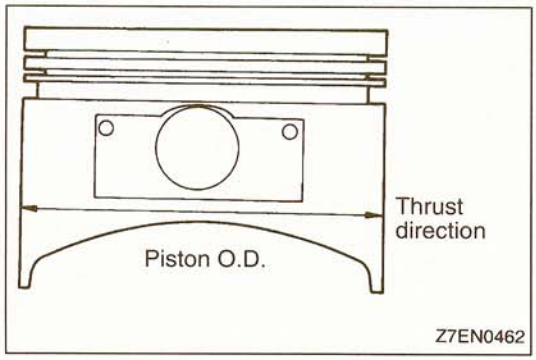


(4) Check the cylinder walls for scratches and seizure. If defects are evident, correct (rebore to an oversize) or replace.

(5) Using a cylinder gauge, measure the cylinder bore and cylindricity. If worn badly, correct by boring the cylinders to an oversize and replace pistons and piston rings. Measure at the points shown in the illustration.

**Standard value:**
**Cylinder I.D.: 91.1 mm (3.59 in.)**
**Cylindricity: 0.01 mm (.0004 in.)**

## BORING CYLINDER

(1) Oversize pistons to be used should be determined on the basis of the largest bore cylinder.

**Piston size identification**

| Size | Identification mark |
|---|---|
| 0.50 mm (.02 in.) O.S. | 0.50 |
| 1.00 mm (.04 in.) O.S. | 1.00 |

NOTE
Size mark is stamped on the piston top.

(2) Measure the outside diameter of the piston to be used. Measure it in the thrust direction as shown.

(3) Based on the measured piston O.D., calculate the boring finish dimension.

**Boring finish dimension =**
**Piston O.D. + (clearance between piston O.D. and cylinder) – 0.02 mm (.0008 in.) (honing margin)**

(4) Bore all cylinders to the calculated boring finish dimension.

**Caution**
**To prevent distortion that may result from temperature rise during honing, bore cylinders in the order of No.2, No.4, No.6, No.1, No.3 and No.5.**

(5) Hone to the final finish dimension (piston O.D. + clearance between piston O.D. and cylinder).

(6) Check the clearance between the piston and cylinder.

**Clearance between piston and cylinder:**
**0.02–0.04 mm (.0008–.0016 in.)**

NOTE
When boring cylinders, finish all of six cylinders to the same oversize. Do not bore only one cylinder to an oversize.

# BRACKET

11300900038

## REMOVAL AND INSTALLATION

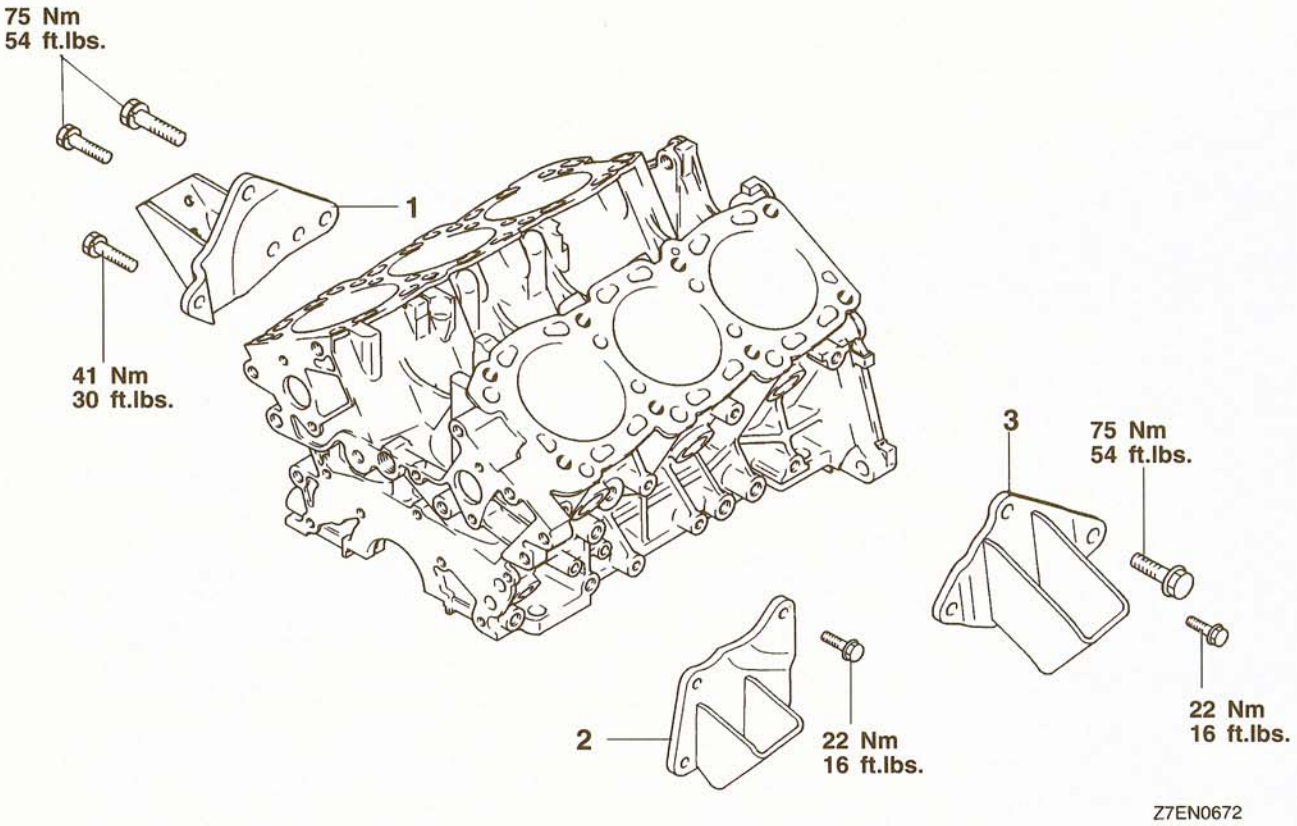


**Removal steps**

1. Engine support bracket, right
2. Engine support bracket, left <12 Valve Engine >
3. Engine support bracket, left <24 Valve Engine>

TSB Revision

# ENGINE <3.5L>

## CONTENTS

11109000146


**CAMSHAFT OIL SEAL ..... 17**

**CRANKSHAFT OIL SEAL ..... 19**
- Front Oil Seal ..... 19
- Rear Oil Seal ..... 20

**CYLINDER HEAD GASKET ..... 26**

**ENGINE ASSEMBLY ..... 14**

**ENGINE OIL COOLER ..... 36**

**GENERAL SPECIFICATIONS ..... 2**

**OIL PAN AND OIL SCREEN ..... 22**
- Oil Pan, Lower ..... 22
- Oil Pan, Upper And Oil Screen ..... 24

**ON-VEHICLE SERVICE ..... 6**
- Basic Idle Speed Adjustment ..... Refer to GROUP 13A
- Compression Pressure Check ..... 10
- Curb Idle Speed Check ..... 8
- Drive Belt Tension Check and Adjustment ..... 6
- Idle Mixture Check ..... 9
- Ignition Timing Check ..... 7
- Lash Adjuster Check ..... 12
- Manifold Vacuum Check ..... 11

**SEALANTS ..... 3**

**SERVICE SPECIFICATIONS ..... 2**

**SPECIAL TOOLS ..... 3**

**TIMING BELT ..... 30**

**TROUBLESHOOTING ..... 5**

# ENGINE <3.5L>

11100020011

## GENERAL SPECIFICATIONS

| Items | | | Specifications |
|---|---|---|---|
| Type | | | V-type, Double Over Head Camshaft |
| Number of cylinders | | | 6 |
| Bore mm (in.) | | | 93.0 (3.661) |
| Stroke mm (in.) | | | 85.8 (3.378) |
| Piston displacement cm3 (cu.in.) | | | 3,497 (213.4) |
| Compression ratio | | | 9.5 |
| Firing order | | | 1-2-3-4-5-6 |
| Valve timing | Intake valve | Opens (BTDC) | 11° |
| | | Closes (ABDC) | 60° |
| | Exhaust valve | Opens (BBDC) | 43° |
| | | Closes (ATDC) | 20° |
| Valve overlap | | | 32° |
| Intake valve duration | | | 252° |
| Exhaust valve duration | | | 244° |

## SERVICE SPECIFICATIONS

11100030151

| Items | | | | Standard value | Limit |
|---|---|---|---|---|---|
| Drive belt tension N (lbs.) | Generator V-ribbed type | When checked | | 392–588 (87–130) | – |
| | | When new belt is installed | | 637–833 (141–184) | – |
| | | When used belt is installed | | 441–539 (98–119) | – |
| | Power steering pump | When checked | | 294–490 (66–110) | – |
| | | When new belt is installed | | 490–686 (110–154) | – |
| | | When used belt is installed | | 343–441 (77–99) | – |
| Drive belt deflection <Reference value> mm (in.) | Generator V-ribbed type | When checked | A | 5.0–7.0 (.20–.28) | – |
| | | | B | 7.5–9.5 (.30–.37) | – |
| | | When new belt is installed | A | 4.0–5.0 (.16–.20) | – |
| | | | B | 5.5–7.5 (.22–.30) | – |
| | | When used belt is installed | A | 5.5–6.5 (.22–.26) | – |
| | | | B | 8.0–9.0 (.31–.35) | – |

A: Measure between the water pump pulley and the crankshaft pulley.
B: Measure between the water pump pulley and the generator.

TSB Revision

| Items | | | Standard value | Limit |
|---|---|---|---|---|
| Drive belt deflection <Reference value> mm (in.) | Power steering pump | When checked | 13.0–17.0 (.51–.67) | – |
| | | When new belt is installed | 11.0–13.0 (.43–.51) | – |
| | | When used belt is installed | 14.0–16.0 (.55–.63) | – |
| | A/C compressor | When checked | 6.5–7.5 (.26–.29) | – |
| | | When new belt is installed | 5.0–6.0 (.20–.24) | – |
| | | When used belt is installed | 6.5–7.5 (.26–.29) | – |
| Basic ignition timing at idle | | | 5° BTDC ± 3° | – |
| Actual ignition timing at curb idle | | | Approx. 15° BTDC | – |
| CO contents % | | | 0.5 or less | – |
| HC contents ppm | | | 100 or less | – |
| Curb idle speed r/min | | | 700 ± 100 | – |
| Compression pressure (250–400 r/min) kPa (psi) | | | 1,270 (184) | min. 960 (139) |
| Compression pressure difference of all cylinder kPa (psi) | | | – | max. 100 (14) |
| Intake manifold vacuum at curb idle kPa (in. Hg) | | | – | min. 60 (18) |
| Timing belt | Amount of projection of auto-tensioner rod mm (in.) (Distance between the tensioner arm and auto-tensioner body) | | 3.8–4.5 (.149–.177) | – |

## SEALANTS

11100050140

| Items | Recommended sealant |
|---|---|
| Oil pan | MITSUBISHI GENUINE Part No. MD970389 or equivalent |
| Rocker cover | 3M ATD Part No. 8660 or equivalent |

## SPECIAL TOOLS

11100060143

| Tool | Tool number and name | Supersession | Application |
|---|---|---|---|
| 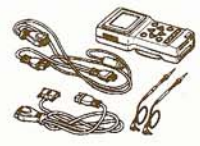 | MB991502<br>Scan tool (MUT-II) | – | Checking of engine idling speed |
|  | ROM pack | – | |
| 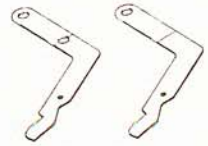 | MD998782<br>Valve lifter set | – | Removal of the lash adjuster |

TSB Revision

| Tool | Tool number and name | Supersession | Application |
|---|---|---|---|
| 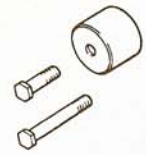 | MD998761<br>Camshaft oil seal installer | MD998761-01 | Installation of the camshaft oil seals |
| 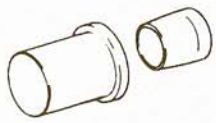 | MD998717<br>Crankshaft front oil seal installer | – | Installation of the crankshaft front oil seal |
| 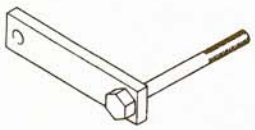 | MD998781<br>Flywheel stopper | – | Supporting the drive plate |
|  | MD998718<br>Crankshaft rear oil seal installer | MD998718-01 | Installation of the crankshaft rear oil seal |
| 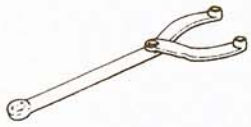 | MB990767<br>End yoke holder | MB990767-01 | Supporting the sprocket and shaft pulley during removal and installation |
| 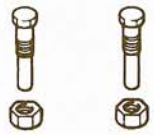 | MD998754<br>Crankshaft pulley holder pin | – | Supporting the crankshaft pulley when removing and installing the crankshaft bolt and pulley.<br>Use together with MB990767 |
| 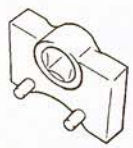 | MD998767<br>Tension pulley socket wrench | – | Adjustment of the timing belt |
|  | MD998769<br>Crankshaft sprocket spacer | – | Used if the crankshaft needs to be rotated to attach the timing belt, etc. |
| 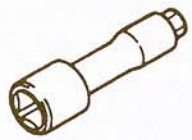 | MD998051<br>Wrench, cylinder head bolt | MD998051-01 | Loosening and tightening of cylinder head bolt |

# TROUBLESHOOTING

11100070139

| Symptom | Probable Cause | Remedy |
|---|---|---|
| Compression is too low. | Cylinder head gasket is blown. | Replace the gasket. |
| | Piston ring is worn or damaged. | Replace the rings. |
| | Piston or cylinder is worn. | Repair or replace the piston and/or the cylinder block. |
| | Valve seat is worn or damaged. | Repair or replace the piston and/or the seat ring. |
| Oil pressure drops. | Engine oil level is too low. | Check the engine oil level. |
| | Malfunction of oil pressure switch | Replace the oil pressure switch. |
| | Oil filter is clogged | Install a new filter. |
| | Oil pump gears or cover are worn. | Replace the gears and/or the cover. |
| | Thin or diluted engine oil | Change the engine oil to the correct viscosity. |
| | Oil relief valve is stuck (opened). | Repair the relief valve. |
| | Excessive bearing clearance | Replace the bearings. |
| Oil pressure is too high. | Oil relief valve is stuck (closed). | Repair the relief valve. |
| Noisy valves | Malfunction of lash adjuster | Replace the lash adjuster. |
| | Thin or diluted engine oil (low oil pressure) | Change the engine oil. |
| | Valve stem or valve guide is worn or damaged. | Replace the valve and/or the guide. |
| Connecting rod noise/ main bearing noise | Insufficient oil supply | Check the engine oil level. |
| | Thin or diluted engine oil | Change the engine oil. |
| | Excessive bearing clearance | Replace the bearings. |

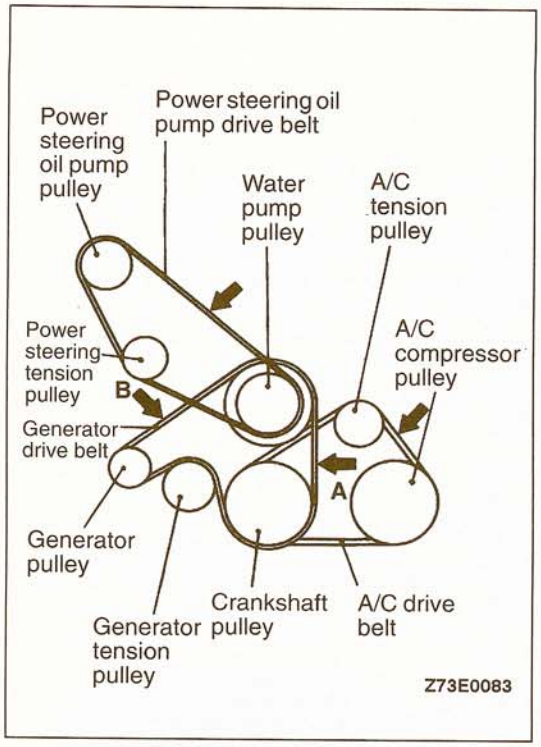


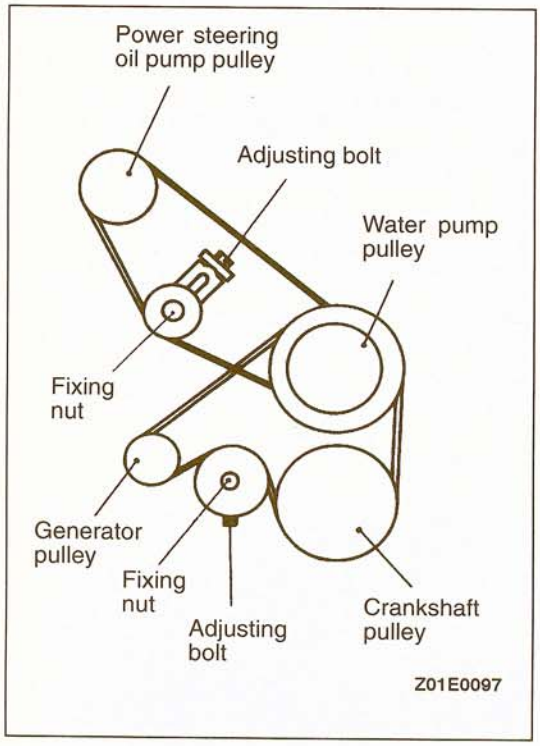


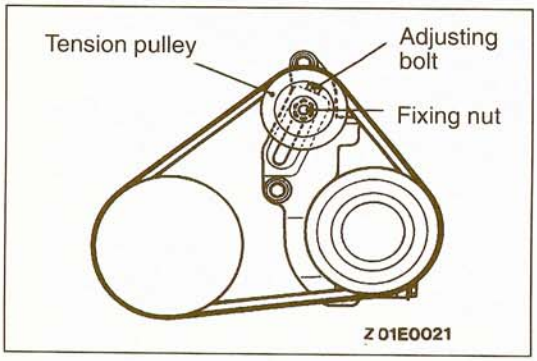


# ON-VEHICLE SERVICE

11100310019

## DRIVE BELT TENSION CHECK AND ADJUSTMENT

Check the belt tension by using a belt-tension gage or apply 98 N (22 lbs.) of force to the belt midway between the pulleys as shown in the illustration, and measure the deflection.

**Standard value:**

| Item | | Check value | Adjustment value | |
|---|---|---|---|---|
| | | | New belt | Used belt |
| For generator | Tension N (lbs.) | 392–588 (87–130) | 637–833 (141–184) | 441–539 (98–119) |
| | Deflection <Reference value> mm (in.) | A: 5.0–7.0 (.20–.28) | A: 4.0–5.0 (.16–.20) | A: 5.5–6.5 (.22–.26) |
| | | B: 7.5–9.5 (.30–.37) | B: 5.5–7.5 (.22–.30) | B: 8.0–9.0 (.31–.35) |
| For power steering | Tension N (lbs.) | 294–490 (66–110) | 490–686 (110–154) | 343–441 (77–99) |
| | Deflection <Reference value> mm (in.) | 13.0–17.0 (.51–.67) | 11.0–13.0 (.43–.51) | 14.0–16.0 (.55–.63) |
| For A/C | Deflection mm (in.) | 6.5–7.5 (.26–.30) | 5.0–6.0 (.20–.24) | 6.5–7.5 (.26–.30) |

A: Measure between the water pump pulley and the crankshaft pulley.
B: Measure between the water pump pulley and the generator.

### GENERATOR DRIVE BELT AND POWER STEERING OIL PUMP DRIVE BELT TENSION ADJUSTMENT

(1) Loosen the tension pulley fixing nut.
(2) Adjust the belt tension using the adjusting bolt.
(3) Tighten the fixing nut.
(4) Crank the engine once or more.
(5) Check the belt tension.

### AIR CONDITIONING COMPRESSOR DRIVE BELT TENSION ADJUSTMENT

(1) Loosen the tension pulley fixing nut.
(2) Adjust the belt tension using the adjusting bolt.
(3) Tighten the fixing nut.
(4) Crank the engine once or more.
(5) Check the belt tension.

TSB Revision

## IGNITION TIMING CHECK

11100170075

(1) Before inspection, set the vehicle to the following condition.
- Engine coolant temperature: 80–95°C (176–203°F)
- Lights and all accessories: OFF
- Transmission: P range

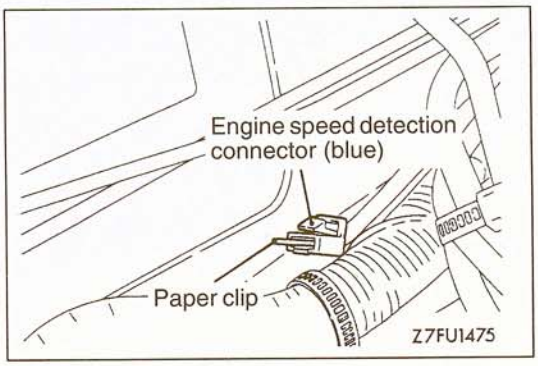


(2) Insert a paper clip into the engine speed detection connector (blue), and then connect a tachometer to the paper clip.

NOTE
Do not use the scan tool. If the scan tool is connected to the data link connector, the ignition timing will be unchanged instead of reverting to the basic ignition timing.

(3) Set the timing light.
(4) Start the engine and run it at idle.
(5) Check the curb idle speed.

**Standard value: 700±100 r/min**

NOTE
The reading on the tachometer indicates one-third of the actual engine speed. In other words, the actual engine speed is three times the indication on the tachometer.

(6) Turn the ignition switch to OFF.
(7) Disconnect the waterproof female connector from the ignition timing adjustment connector (brown).

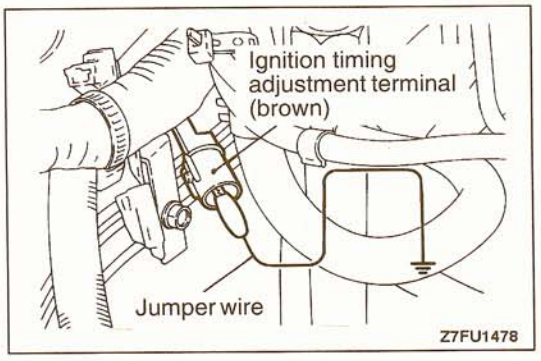


(8) Use a jumper wire to ground the ignition timing adjustment terminal.

NOTE
Grounding this terminal sets the engine to the basic ignition timing.

(9) Start the engine and run it at idle.
(10) Check the basic ignition timing.

**Standard value: 5°BTDC±3°**

(11) If the ignition timing is not within the standard value range, refer to GROUP 13A – On-vehicle Inspection of MFI Components and check the crankshaft position sensor.
(12) Disconnect the jumper wire connected at step (8).
(13) Check that the idling ignition timing is at the correct value.

**Standard value: Approx. 15°BTDC**

NOTE
(1) Ignition timing is variable within about ±7°, even under normal operating conditions.
(2) And it is automatically further advanced by about 5° from 15°BTDC at higher altitudes.

**TSB Revision**

## CURB IDLE SPEED CHECK

11100190170

(1) Before inspection, set the vehicle to the following condition.
- Engine coolant temperature: 80–95°C (176–203°
- Lights and all accessories: OFF
- Transmission: P range

(2) Check the basic ignition timing.

**Standard value: 5°BTDC±3°**

(3) After turning the ignition switch to OFF, connect a tachometer, or connect the scan tool to the data link connector (white).

NOTE
For the procedure for connecting the tachometer, refer to P.11C-7.

(4) Run the engine at idle for two minutes.
(5) Check the curb idle speed.

**Standard value: 700±100 r/min**

NOTE
(1) The idle speed is automatically regulated by the idle-speed control system.
(2) The engine speed indicated is a third of actual speed. In other words, the reading of the tachometer times 3 is actual speed.

(6) If the engine speed is not at the standard value, refer to GROUP 13A – Check Chart Classified by Problem Symptoms, and check the MFI components.

## IDLE MIXTURE CHECK

11100210142

(1) Before inspection, set the vehicle to the following condition.
- Engine coolant temperature: 80–95°C (176–203°F)
- Lights and all accessories: OFF
- Transmission: P range

(2) Check that the ignition timing is at the standard value.

**Standard value: 5°BTDC±3°**

(3) After turning the ignition switch to OFF, connect a tachometer, or connect the scan tool to the data link connector (white).

NOTE
For the procedure for connecting the tachometer, refer to P.11C-7.

(4) Start the engine and race it at a speed of 2,500 r/min for two minutes.
(5) Connect a CO and HC tester.
(6) Check the CO contents and the HC contents while the engine is idling.

**Standard value:**
**CO contents: 0.5% or less**
**HC contents: 100 ppm or less**

(7) If the concentrations are outside the standard values, check the following items.
- Diagnostic output
- Closed loop control
  (If closed loop control is being carried out normally, the heated oxygen sensor output signal will vary between 0–400 mV and 600–1,000 mV while the engine is idling.)
- Fuel pressure
- Injectors
- Ignition coil, spark plug cables and spark plugs
- Leaks from EGR system and EGR valve
- Evaporative emission control system
- Compression pressure

NOTE
If the results of the checks for all items are normal but the CO and HC concentrations still exceed the standard values, replace the three-way catalyst.

## COMPRESSION PRESSURE CHECK

11100260178

(1) Before inspection, check that the engine oil, starter and battery are normal. Also, set the vehicle to the following condition:
- Engine coolant temperature: 80–95°C (176–203°F)
- Lights and all accessories: OFF
- Transmission: P range

(2) Remove all of the spark plugs.

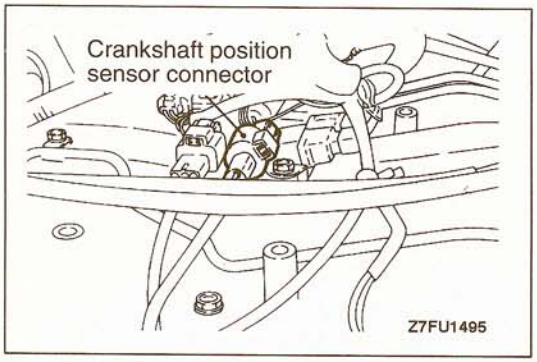


(3) Disconnect the crankshaft position sensor connector.

NOTE
Doing this will prevent the engine control module from carrying out ignition and fuel injection.

(4) Cover the spark plug holes with a shop towel, and after the engine has been cranked, check that no foreign material is adhering to the rag.

**Caution**
1. **When you crank the engine, keep away from the spark plug mounting holes.**
2. **If a compression measurement is carried out with water, oil, fuel, etc. in the cylinder due to the cracks in the cylinders, these substances heated to a very high temperature will blow off the spark plug mounting holes, which could be dangerous.**

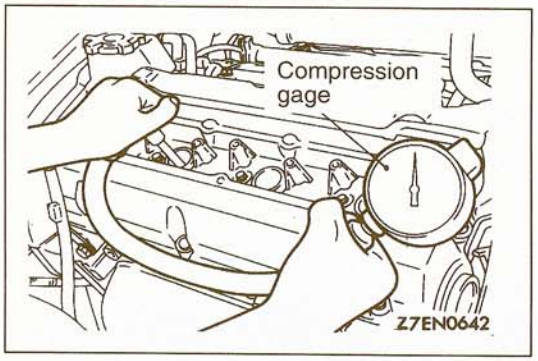


(5) Install a compression gage to a spark plug mounting hole.

(6) Crank the engine to measure the compression pressure.

**Standard value: 1270 kPa (184 psi) / 250–400 r/min**
**Limit: min. 960 kPa (139 psi) / 250–400 r/min**

(7) Measure the compression of all the cylinders, and check that the pressure differences of the cylinders are below the limit.

**Limit: max. 100 kPa (14 psi)**

(8) If there is cylinder in which the compression pressure or pressure difference is beyond the limit value, pour in a small amount of engine oil through the spark plug mounting hole, and repeat steps (6) through (7).
   1) If the small amount of oil poured in causes the compression pressure to rise, then it is likely that either the piston ring, cylinder wall surface or both are worn or damaged.
   2) If the small amount of oil poured in does not cause the compression pressure to rise, then valve seizure, poor valve contact, or leakage from the gasket is suspected.
(9) Reconnect the crankshaft position sensor connector.
(10) Reinstall the spark plugs and spark plug cables.
(11) Use the scan tool to erase the diagnostic trouble codes, or disconnect the negative battery cable for 10 seconds or more and then re-connect it.

NOTE
This will erase the diagnostic trouble code resulting from the crankshaft position sensor connector being disconnected.

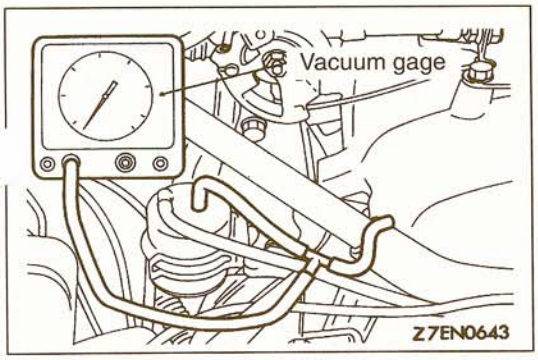


## MANIFOLD VACUUM CHECK 11100270171

(1) Before inspection, set the vehicle to the following condition.
   - Engine coolant temperature: 80–95°C (176–203°F)
   - Lights and all accessories: OFF
   - Transmission: P range
(2) Connect a tachometer, or connect the scan tool to the data link connector (white).

NOTE
For the procedure for connecting the tachometer, refer to P.11C-7.

(3) Install the T-joint to the vacuum hose between the intake manifold plenum and the vacuum motor, and then connect the vacuum gage.
(4) Start the engine and check that the idle speed is within the standard value range.
(5) Check the manifold vacuum.

**Limit: min. 60 kPa (18 in. Hg)**

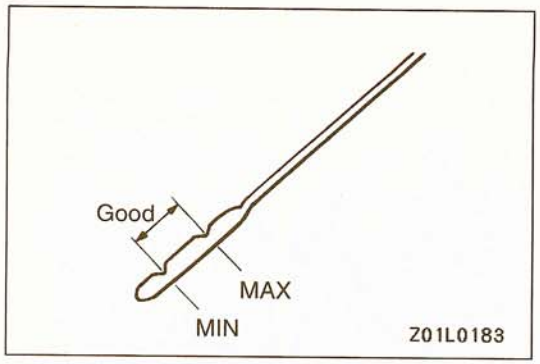


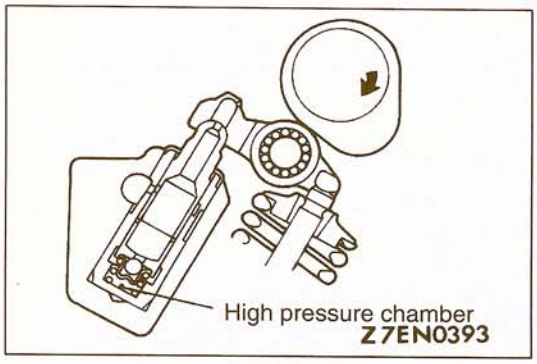


## LASH ADJUSTER CHECK

11100290160

NOTE
Directly after starting the engine or while the engine is runnin if an abnormal sound (knocking) that seems to be comir from the lash adjuster is heard and doesn't stop, carry out the following inspection.

(1) Check the engine oil and replenish or replace the oil if necessary.

NOTE
(1) If the engine oil level is low, the air drawn in from the oil strainer will be trapped in the oil passage.
(2) If the engine oil level is higher than the specified level, agitation of the oil by the crankshaft could cause a large amount of air to enter the oil.
(3) Deteriorated oil contains a large amount of air, because the air, once trapped, is not readily separated from the oil.

If the air trapped due to these causes enters the high pressure chamber in the lash adjuster, the air in the high pressure chamber will be compressed while the valve is in the opened position. The lash adjuster will be drawn too far in, and will produce noise when the valve closes. This is the same phenomenon that occurs when the valve clearance is adjusted to an excessive dimension.
In this case, the condition will return to normal if the air escapes from the lash adjuster.

(2) Start the engine and gently race* it several times (1 times or less).
If racing the engine causes the noise to die away, it means that the air has escaped from the high pressure chamber of the lash adjuster and that the lash adjuster has returned to the normal condition.

* After gradually increasing the engine speed from idle speed to 3000 r/min (over 30 seconds), gradually reduce the engine speed back to idle speed (over 30 seconds).

NOTE
(1) When the vehicle is parked on a slope for a long period, the oil in the lash adjuster will decrease. When the engine is started, air might enter the high pressure chamber.
(2) After a long period of parking during which the oil in the oil passage drains away, it will take same time before the oil is re-supplied to the lash adjuster. Therefore, air could enter the high pressure chamber during this time.

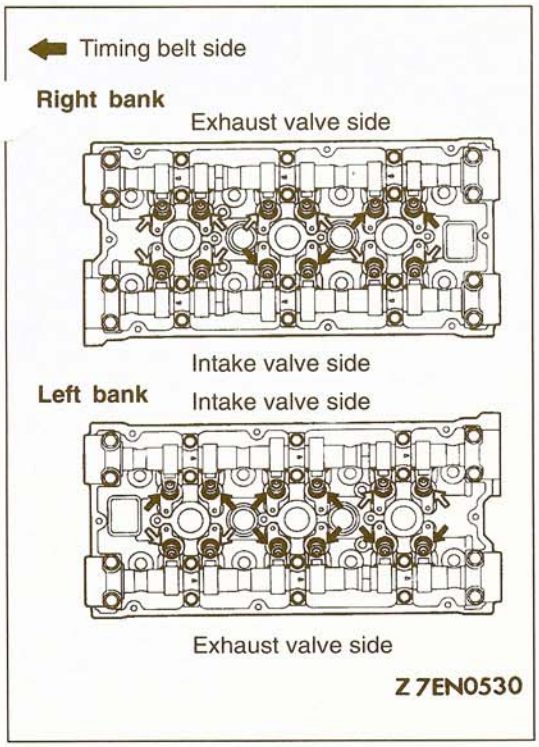


(3) If any abnormal noise is not eliminated by racing, check the lash adjuster by the following procedure.
1) Stop the engine.
2) Set the engine No. 1 cylinder to the compression top dead center position.
3) Press the rocker arm at the place indicated by the white arrow mark as shown in the illustration to check whether the rocker arm is lowered or not.
4) Slowly turn the crankshaft 360° clockwise.
5) By the same procedure as in step 3), check the rocker arm at the area indicated by the black arrow mark as shown in the illustration.
6) Push down the rocker arm at a portion located right above the lash adjuster. If the rocker arm goes down readily, there is a malfunction of the lash adjuster. Replace it with a new one in accordance with step (4).
In addition, when replacing the lash adjuster, make sure that all air is removed from the lash adjuster before installation. Then carry out inspection in accordance with steps 1) through 5) to make sure that there is no abnormality.

NOTE
(1) A leak-down test can be carried out to accurately determine whether the lash adjuster is defective or not.
(2) For the procedures for the leak-down test and for bleeding air from the lash adjuster, refer to the Engine Service Manual.

In addition, if the rocker arm feels very stiff or cannot be pushed down, the lash adjuster is normal. Therefore, check for some other cause of the noise.

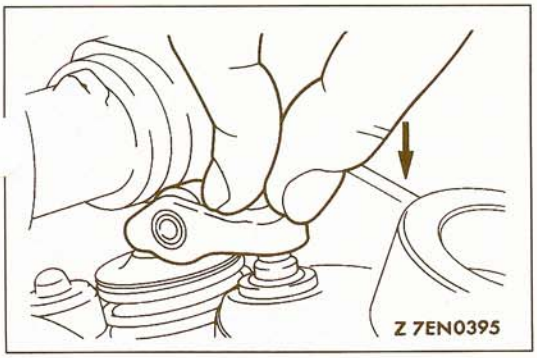


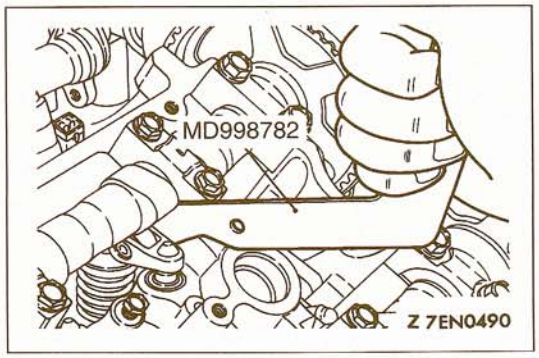


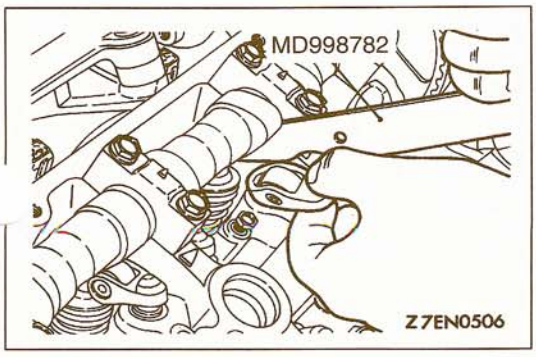


(4) Lash Adjuster Replacement Procedure

**Caution**
**In the cylinders which are being removed, the valves will touch the pistons when the valves are pushed down, so the crankshaft should be turned to lower the piston positions.**
**In addition, the rocker arm located at the valve which is lifted by the cam cannot be removed. Therefore, turn the crankshaft to keep the cam from lifting the valve before removal of the rocker arm.**

1. Use the special tool to press the valve down, and then remove the roller rocker arm.
2. Pull out the lash adjuster from the cylinder head.
3. Install a new lash adjuster from which the air has been bled to the cylinder head.
4. Use the special tool to press the valve down, and then install the roller rocker arm.

NOTE
When the roller rocker arm is installed, place the pivot side of the rocker arm on the lash adjuster. Then, push down the valve and place the slipper side of the rocker arm on the valve stem end.

**TSB Revision**

# ENGINE ASSEMBLY

11200100145

## REMOVAL AND INSTALLATION

**Pre-removal Operation**
- Hood Removal (Refer to GROUP 42 – Hood.)
- Battery and Battery Tray Removal
- Cruise Control Intermediate Link Removal (Refer to GROUP 17 – Auto-cruise Control.)
- Radiator Removal (Refer to GROUP 14 – Radiator.)
- Under Skid Plate, Undercover Removal
- Front Exhaust Pipe Removal (Refer to GROUP 15 – Exhaust Pipe, Muffler and Catalytic Converter.)
- Transmission and Transfer Assembly Removal (Refer to GROUP 23A – Transmission and Transfer Assembly.)

**Post-installation Operation**
- Transmission and Transfer Assembly Installation (Refer to GROUP 23A – Transmission and Transfer Assembly.)
- Front Exhaust Pipe Installation (Refer to GROUP 15 – Exhaust Pipe Muffler and Catalytic Converter.)
- Under Skid Plate, Undercover Installation
- Radiator Installation (Refer to GROUP 14 – Radiator.)
- Battery and Battery Tray Installation
- Auto-cruise Control Intermediate Link Installation and Adjustment (Refer to GROUP 17 – Auto-cruise Control.)
- Hood Installation (Refer to GROUP 42 – Hood.)
- Engine Adjustment
- Accelerator Cable Adjustment (Refer to GROUP 17 – On-vehicle Service.)
- Throttle Cable Adjustment (Refer to GROUP 23A – On-vehicle Service.)
- Engine Oil Supplying and Checking

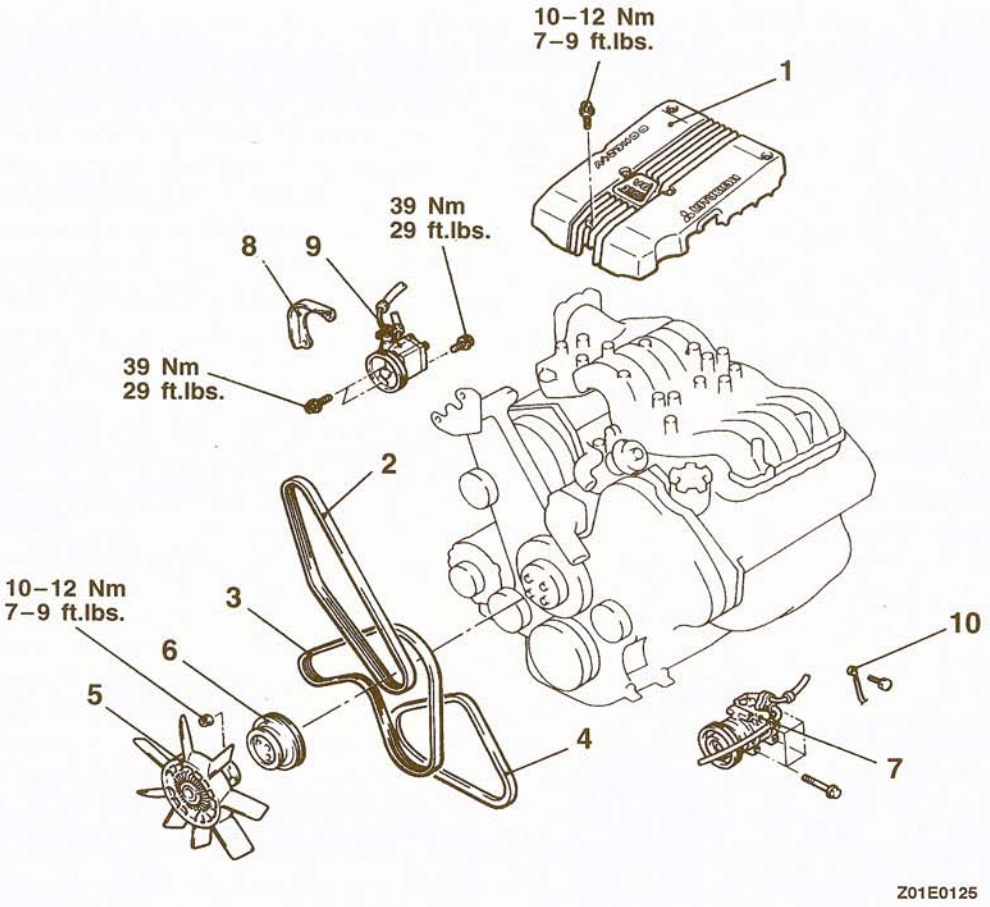


Z01E0125

**Removal Steps**

1. Intake manifold plenum cover
2. Power steering drive belt
3. Generator drive belt
4. A/C drive belt
5. Cooling fan

◀A▶

◀A▶

6. Water pump pulley
7. A/C compressor
8. Cover
9. Power steering pump
10. Ground cable connection

**TSB Revision**

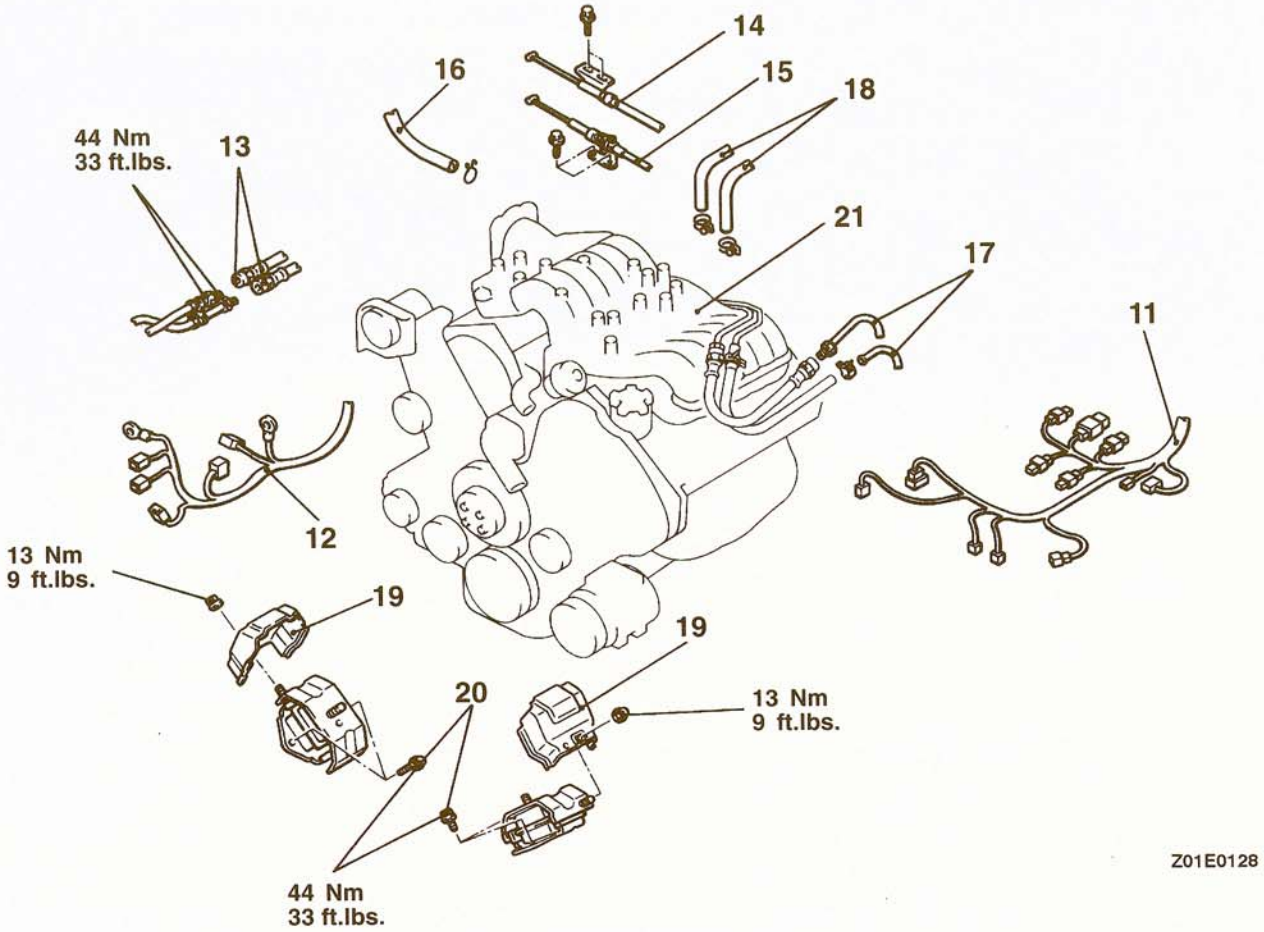


11. Engine control harness connection
12. Generator and starter harness connection
◀B▶ ▶B◀ 13. Engine oil cooler hose connection
14. Accelerator cable connection
15. Throttle cable connection
16. Brake booster vacuum hose connection
17. Fuel hose connection
18. Heater hose connection
19. Heat protectors
20. Engine mounting bolt
◀C▶ ▶A◀ 21. Engine assembly

## REMOVAL SERVICE POINTS

### ◀A▶ COMPRESSOR <A/C>/OIL PUMP (POWER STEERING) REMOVAL

Remove the oil pump and air conditioning compressor (with the hose attached).

NOTE
Suspend the removed oil pump (by using wire or similar material) at a place where no damage will be caused during removal and installation of the engine assembly.

TSB Revision

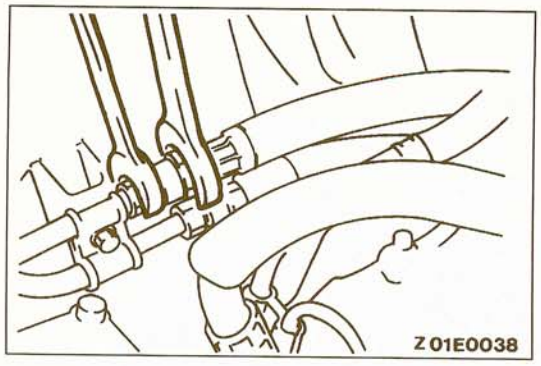


### ◀B▶ OIL COOLER HOSE DISCONNECTION

Use a spanner or similar tool to disconnect the oil cooler hose.

### ◀C▶ ENGINE ASSEMBLY REMOVAL

(1) Check that all cables, hoses, harness connectors, etc. are disconnected from the engine.
(2) Lift the chain block slowly to remove the engine assembly upward from the engine compartment.

## INSTALLATION SERVICE POINTS

### ▶A◀ ENGINE ASSEMBLY INSTALLATION

Install the engine assembly. When doing so, check carefully that all pipes and hoses are connected, and that none ar twisted or damaged.

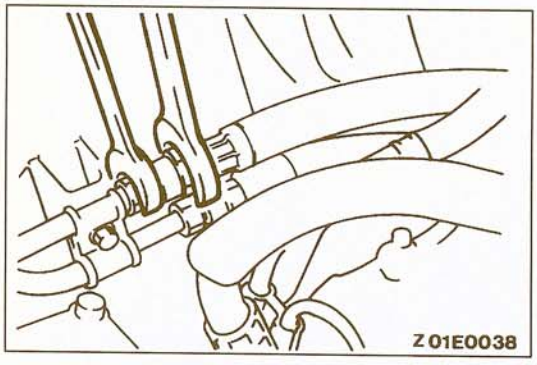


### ▶B◀ OIL COOLER HOSE CONNECTION

Use a spanner or similar tool to connect the oil cooler hose.

# CAMSHAFT OIL SEAL

11200220025

## REMOVAL AND INSTALLATION

**Pre-removal and Post-installation Operation**
- Intake Manifold Plenum Removal and Installation (Refer to GROUP 15 – Intake Manifold Plenum.)
- Timing Belt Removal and Installation (Refer to P.11C-30.)

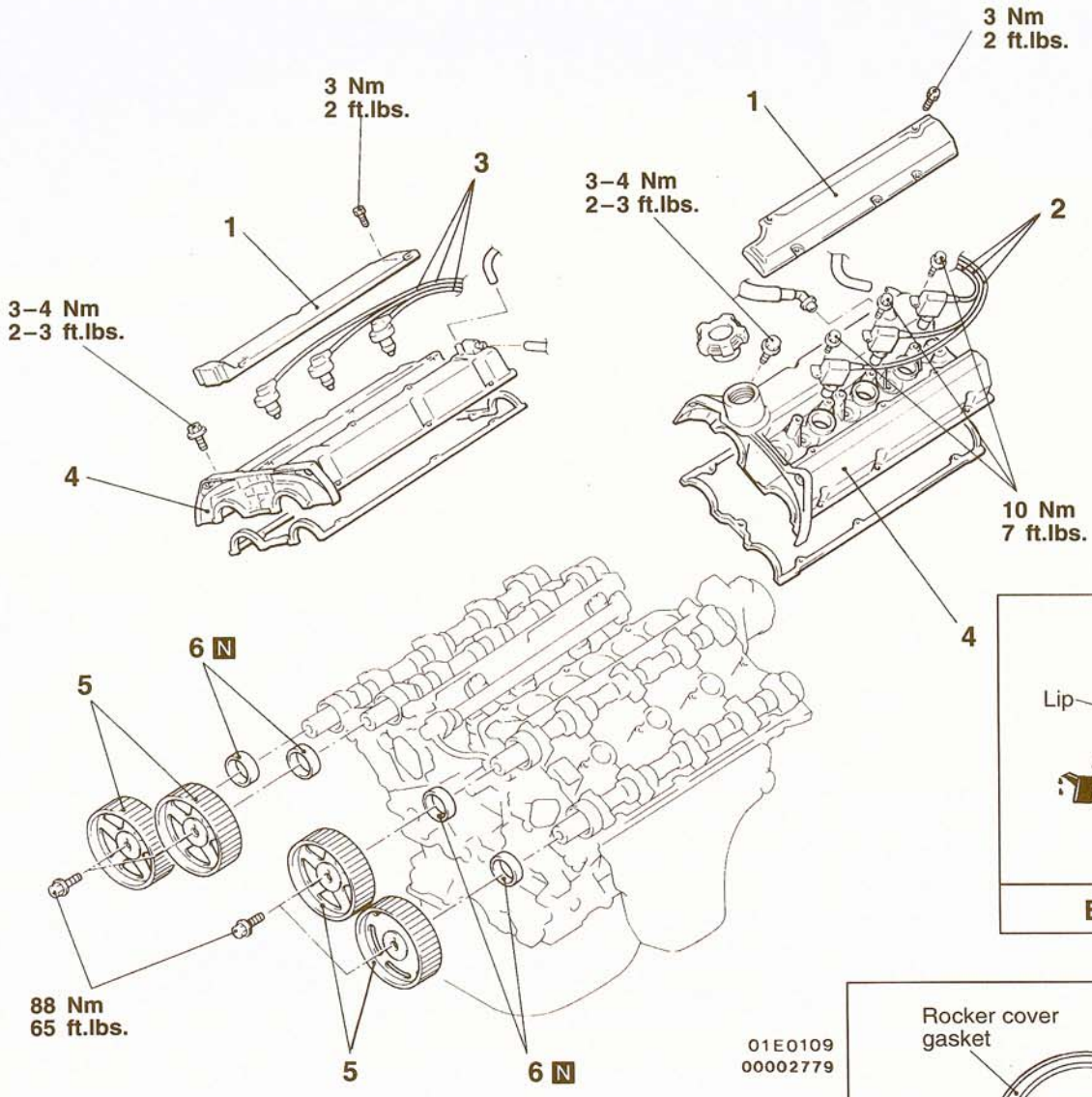


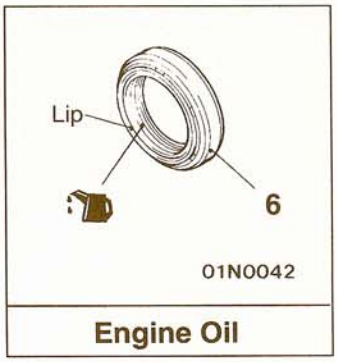


**Engine Oil**

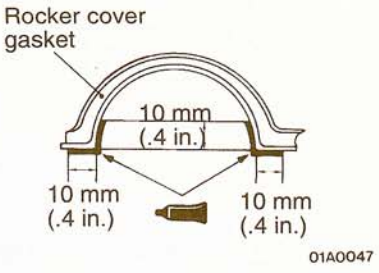


**Sealant:**
**3M ATD Part No. 8660 or equivalent**

**Removal steps**
1. Center cover
2. Ignition coil
3. Spare plug cable

A B B A

4. Rocker cover
5. Camshaft sprocket
6. Camshaft oil seals

**TSB Revision**

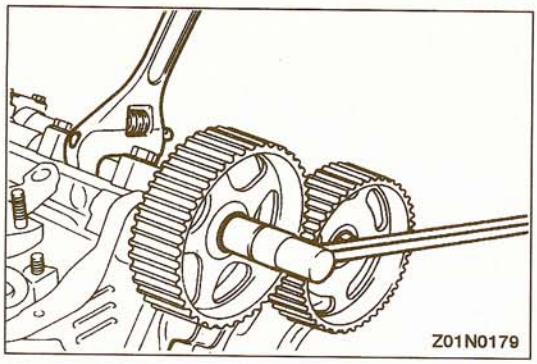


## REMOVAL SERVICE POINTS

### ◀A▶ CAMSHAFT SPROCKET REMOVAL

Use a wrench to hold the hexagonal part of the camshaft to prevent the crankshaft from turning, and then loosen the camshaft sprocket bolt.

**Caution**
**Do not hold the camshaft sprocket with a tool, or a damaged sprocket could result.**

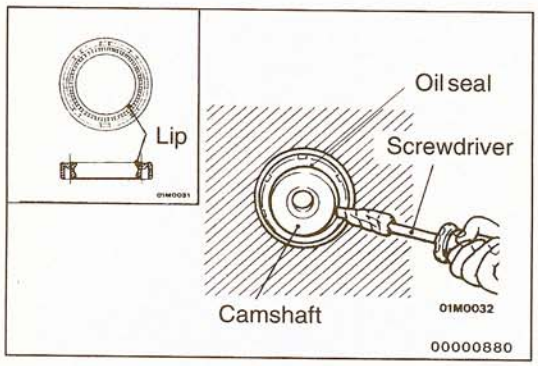


### ◀B▶ CAMSHAFT OIL SEAL REMOVAL

(1) Cut out a portion of the camshaft oil seal lip.
(2) Cover the tip of a screwdriver with a cloth and apply it to the cutout in the oil seal to pry off the oil seal.

**Caution**
**Be careful not to damage the camshaft and cylinder head.**

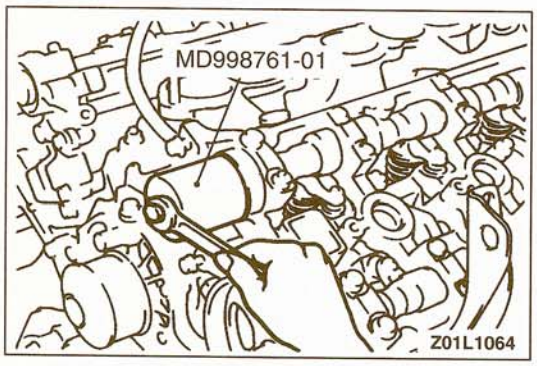


## INSTALLATION SERVICE POINTS

### ▶A◀ CAMSHAFT OIL SEAL INSTALLATION

Apply engine oil to the entire circumference of the oil seal lip, and then use the special tool to press-fit the oil seal.

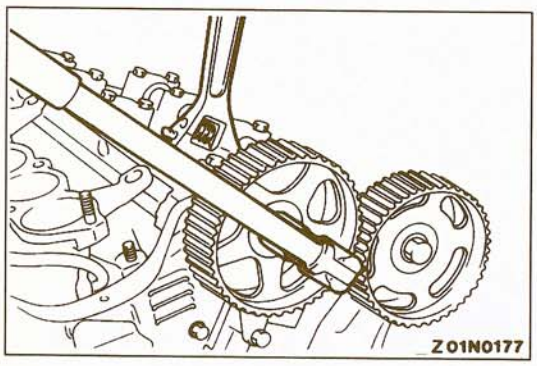


### ▶B◀ CAMSHAFT SPROCKET INSTALLATION

Use a wrench to hold the hexagonal part of the camshaft to prevent the crankshaft from turning, and then tighten the camshaft sprocket bolt.

**Caution**
**Do not hold the camshaft sprocket with a tool, or a damaged sprocket could result.**

# CRANKSHAFT OIL SEAL

11200340103

## FRONT OIL SEAL

### REMOVAL AND INSTALLATION

**Pre-removal and Post-installation Operation**
- Timing Belt Removal and Installation (Refer to P.11C-30.)

**Adjustment**
- Engine Adjustment

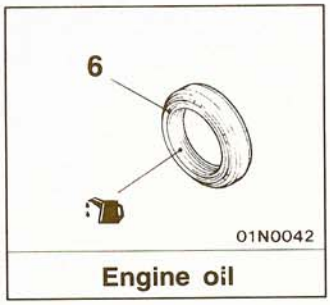


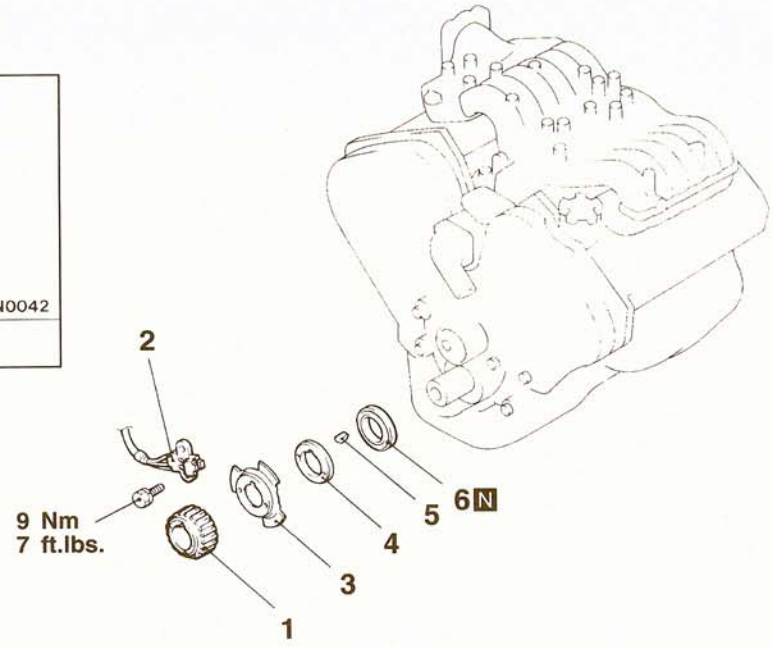


**Removal steps**
1. Crankshaft sprocket
2. Crankshaft position sensor
3. Crankshaft sensing blade
4. Crankshaft spacer
5. Key

◀A▶ ▶A◀ 6. Crankshaft front oil seal

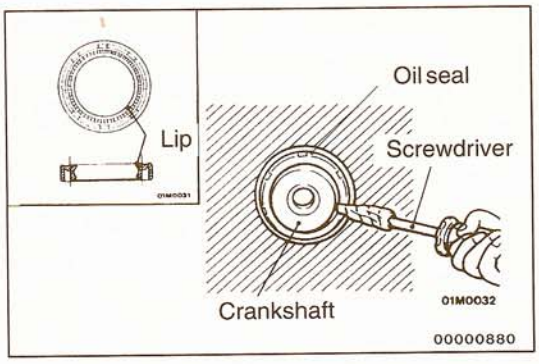


## REMOVAL SERVICE POINT

### ◀A▶ OIL SEAL REMOVAL

(1) Cut out a portion of the crankshaft oil seal lip.
(2) Cover the tip of a screwdriver with a cloth and apply it to the cutout in the oil seal to pry off the oil seal.

**Caution**
**Take care not to damage the crankshaft and oil pump case.**

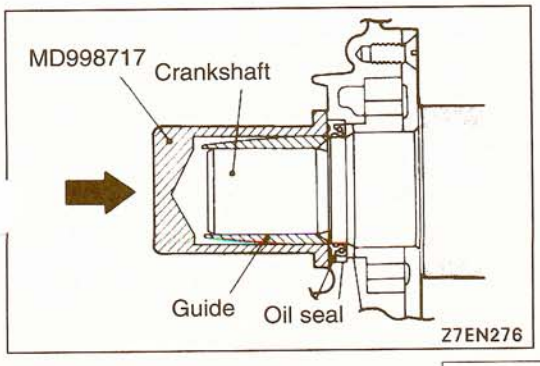


## INSTALLATION SERVICE POINT

### ▶A◀ OIL SEAL INSTALLATION

Use the special tool to tap the oil seal into the oil pump case.

NOTE
Tap it until it is flush with the surface.

**TSB Revision**

## REAR OIL SEAL

11200370102

## REMOVAL AND INSTALLATION

**Pre-removal and Post-installation Operation**
- Transmission Removal and Installation (Refer to GROUP 23A – Transmission and Transfer Assembly.)




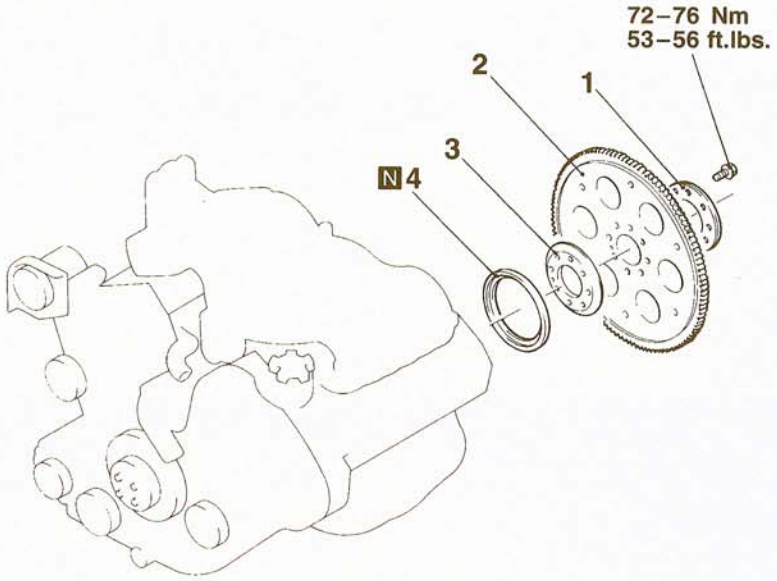


01E0134
00002793

**Removal steps**

◀A▶ ▶B◀ 1. Adaptor plate A
◀A▶ ▶B◀ 2. Drive plate
◀A▶ ▶B◀ 3. Adaptor plate B
◀B▶ ▶A◀ 4. Oil seal

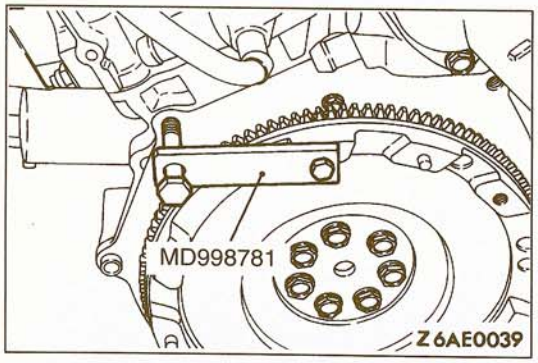


## REMOVAL SERVICE POINTS

### ◀A▶ ADAPTOR PLATE A/DRIVE PLATE/ADAPTOR PLATE B REMOVAL

Use the special tool to secure the drive plate, and then remove the bolts.

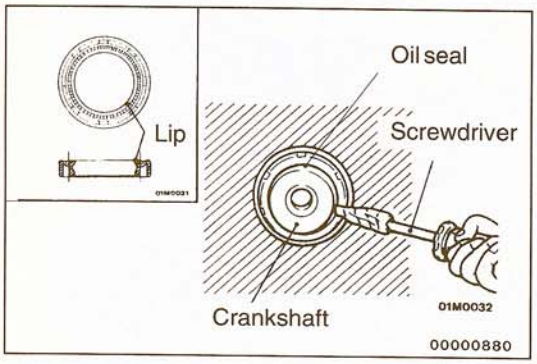


### ◀B▶ OIL SEAL REMOVAL

(1) Cut out a portion of the crankshaft oil seal lip.
(2) Cover the tip of a screwdriver with a cloth and apply it to the cutout in the oil seal to pry off the oil seal.

**Caution**
**Take care not to damage the crankshaft and oil pum case.**

**TSB Revision**

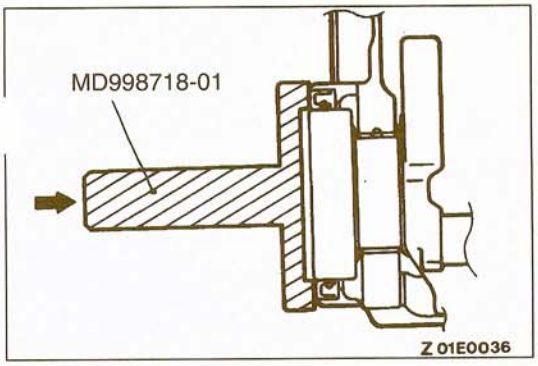


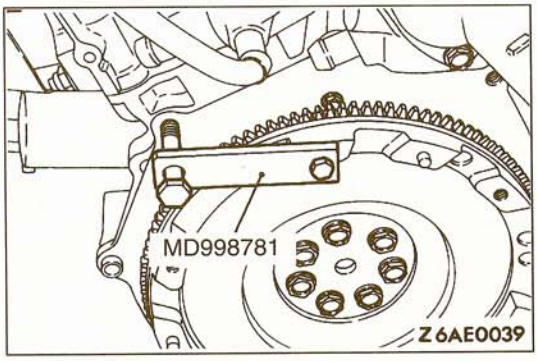


## INSTALLATION SERVICE POINTS

### ▶A◀ OIL SEAL INSTALLATION

Use the special tool to press-fit a new crankshaft rear oil seal into the oil seal case.

### ▶B◀ ADAPTOR PLATE B/DRIVE PLATE /ADAPTOR PLATE A INSTALLATION

Use the special tool to secure the drive plate, and then tighten the bolts.

# OIL PAN AND OIL SCREEN

11200250055

## OIL PAN, LOWER
## REMOVAL AND INSTALLATION

**Pre-removal and Post-installation Operation**
Removal and Installation
- Under Skid Plate, Undercover
- Front Exhaust Pipe (Refer to GROUP 15 – Exhaust Pipe, Mufflers and Catalytic Converter.)

Draining and Supplying
- Engine Oil (Refer to GROUP 00 – Maintenance Service.)

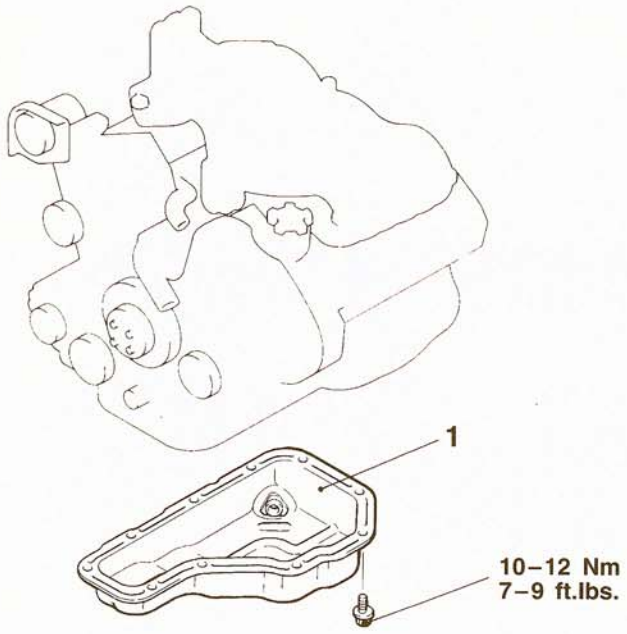


01E0116
00002794

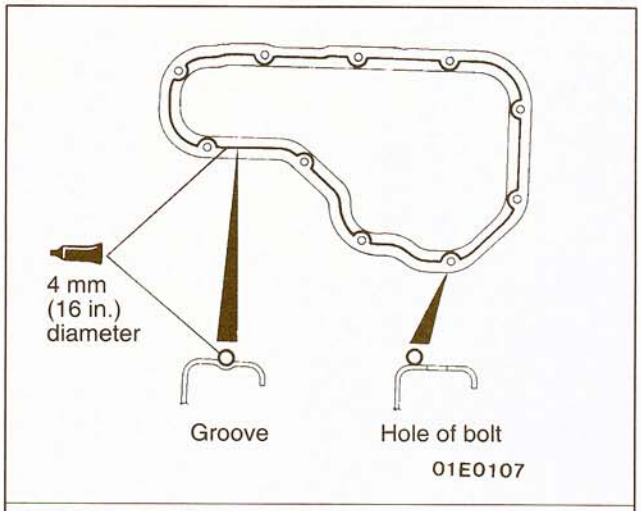


01E0107

**Sealant:**
**MITSUBISHI GENUINE PART NO. MD970389 or equivalent**

◀A▶ ▶A◀ 1. Oil pan, lower

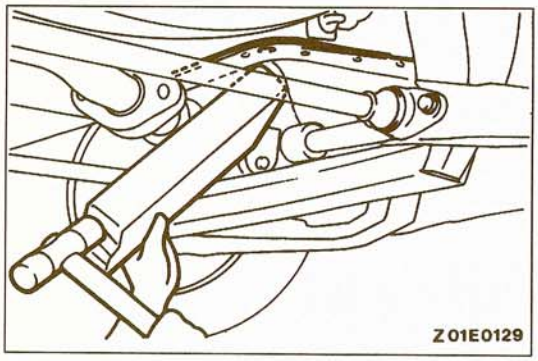

Z01E0129

## REMOVAL SERVICE POINT

### ◀A▶ OIL PAN, LOWER REMOVAL

(1) Remove the oil pan, lower installation bolt.
(2) Place a wooden block to the oil pan, lower as shown in the figure and remove by tapping with a hammer.

**Caution**
**The use of an oil pan remover (MD998727) can damage the oil pan, upper (aluminum made).**

**TSB Revision**

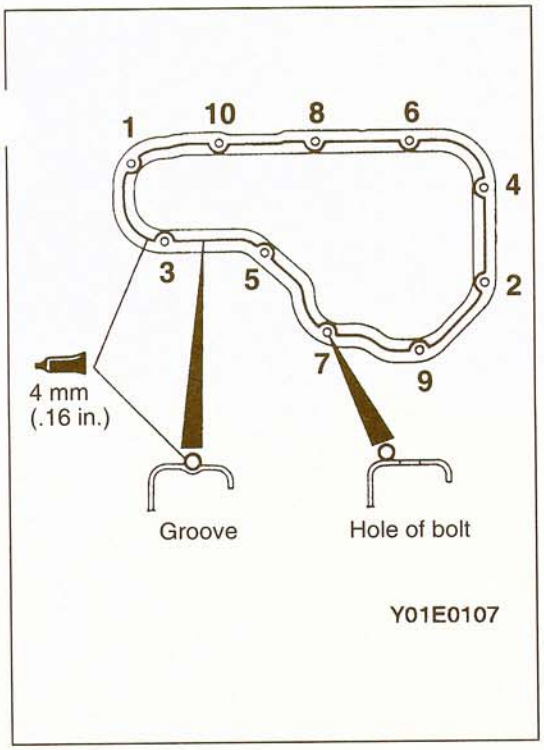


## INSTALLATION SERVICE POINT

### ▶A◀ OIL PAN, LOWER INSTALLATION

(1) Remove the sealant from the oil pan and cylinder block mating surfaces.
(2) Degrease the sealant-coated surface and the engine mating surface.
(3) Apply specified sealant around the gasket surface of the oil pan as shown in the illustration.

**Specified sealant:**
**MITSUBISHI GENUINE PART No. MD970389 or equivalent**

NOTE
The sealant should be applied in a continuous bead approximately 4 mm (.16 in.) in diameter.

(4) Install the oil pan to the cylinder block within 30 minutes after applying the sealant.
(5) Tighten the oil pan mounting bolts in the order shown in the illustration at left.

## OIL PAN, UPPER AND OIL SCREEN

## REMOVAL AND INSTALLATION

**Pre-removal and Post-installation Operation**
Removal and Installation
- Oil Pan, Lower (Refer to P.11C-22.)
- Front Differential Carrier
  (Refer to GROUP 26 – Differential Carrier and Free-wheeling clutch.)

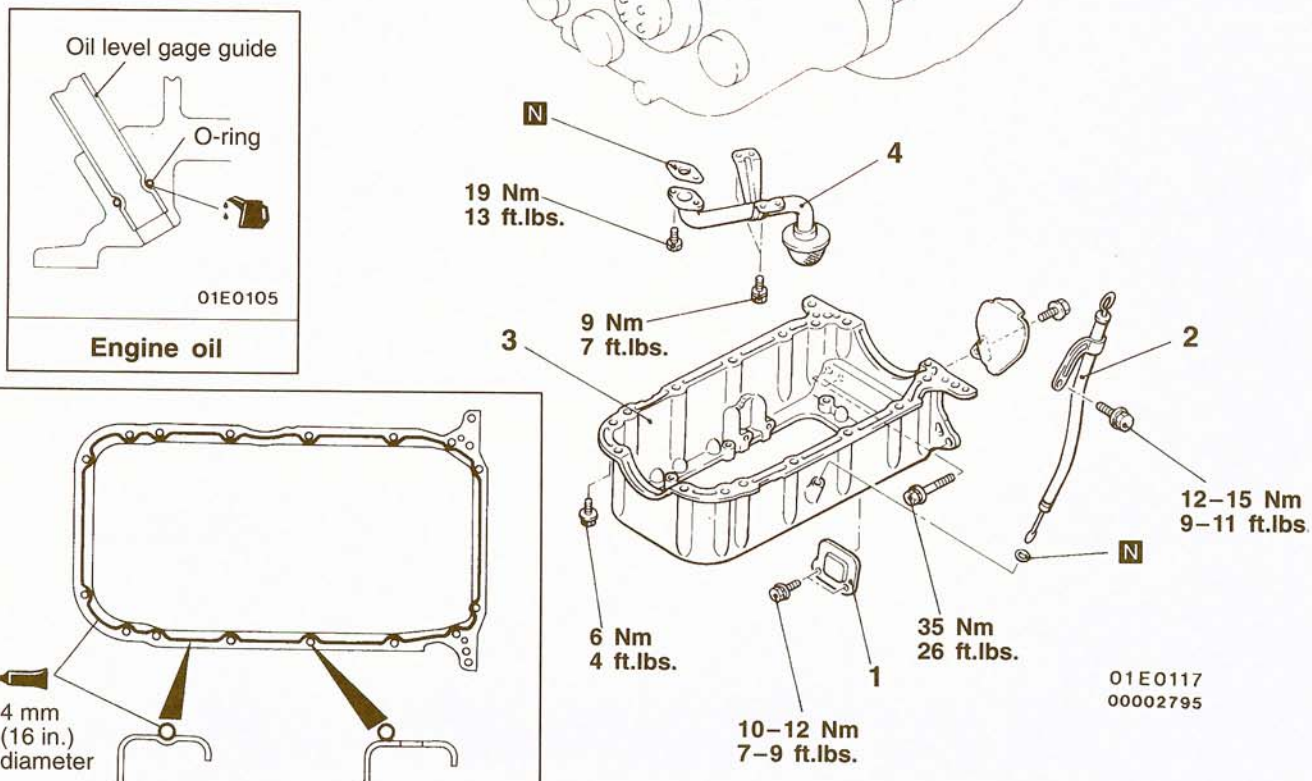


**Removal steps**

1. Cover
2. Oil level gage guide

◀A▶ ▶A◀ 3. Oil pan, upper
4. Oil screen

**TSB Revision**

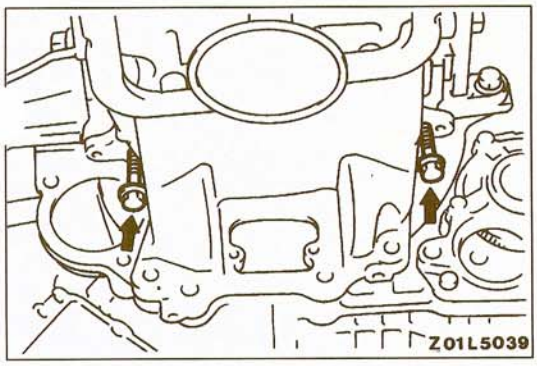


## REMOVAL SERVICE POINT

### ◀A▶ OIL PAN, UPPER REMOVAL

Install a bolt [diameter × length: 10×38 mm (.39×1.50 in.)] to link the oil pan, upper with the transmission in the hole of the oil pan, upper as shown in the illustration, and then tighten the bolt to remove the oil pan, upper.

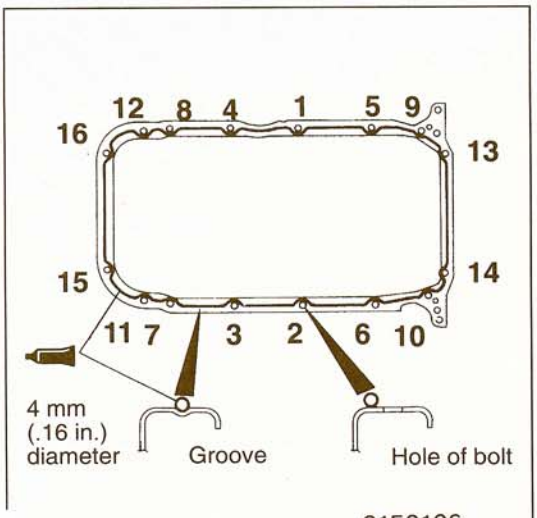


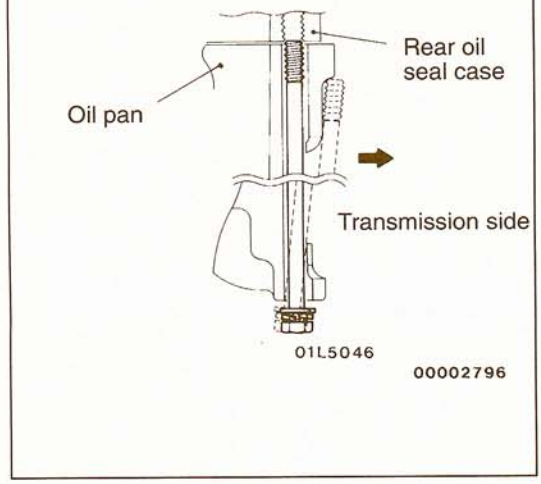


## INSTALLATION SERVICE POINT

### ▶A◀ OIL PAN, UPPER INSTALLATION

(1) Remove the sealant from the oil pan and cylinder block mating surfaces.
(2) Degrease the sealant-coated surface and the engine mating surface.
(3) Apply specified sealant around the gasket surface of the oil pan as shown in the illustration.

**Specified sealant:**
**MITSUBISHI GENUINE PART No. MD970389 or equivalent**

NOTE
The sealant should be applied in a continuous bead approximately 4 mm (.16 in.) in diameter.

(4) Install the oil pan to the cylinder block within 30 minutes after applying the sealant.
(5) Tighten the oil pan mounting bolts in the order shown in the illustration at left.

**Caution**
**The bolt holes for bolts 13 and 14 in the illustration are cut away on the transmission side, so be careful not to insert these bolts at an angle.**

## INSPECTION

11200260010

- Check the oil pan for cracks.
- Check the sealant-coated surface of the oil pan for damage and deformation.

# CYLINDER HEAD GASKET

11200400146

## REMOVAL AND INSTALLATION

**Pre-removal and Post-installation Operation**
- Engine Coolant Draining and Supplying (Refer to GROUP 00 – Maintenance Service.)
- Timing Belt Removal and Installation (Refer to P.11C-30.)
- Intake Manifold Removal and Installation (Refer to GROUP 15 – Intake Manifold.)
- Exhaust Manifold Removal and Installation (Refer to GROUP 15 – Exhaust Manifold.)

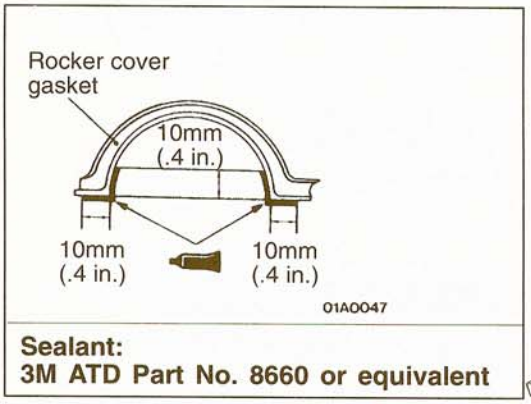


**Sealant:**
**3M ATD Part No. 8660 or equivalent**

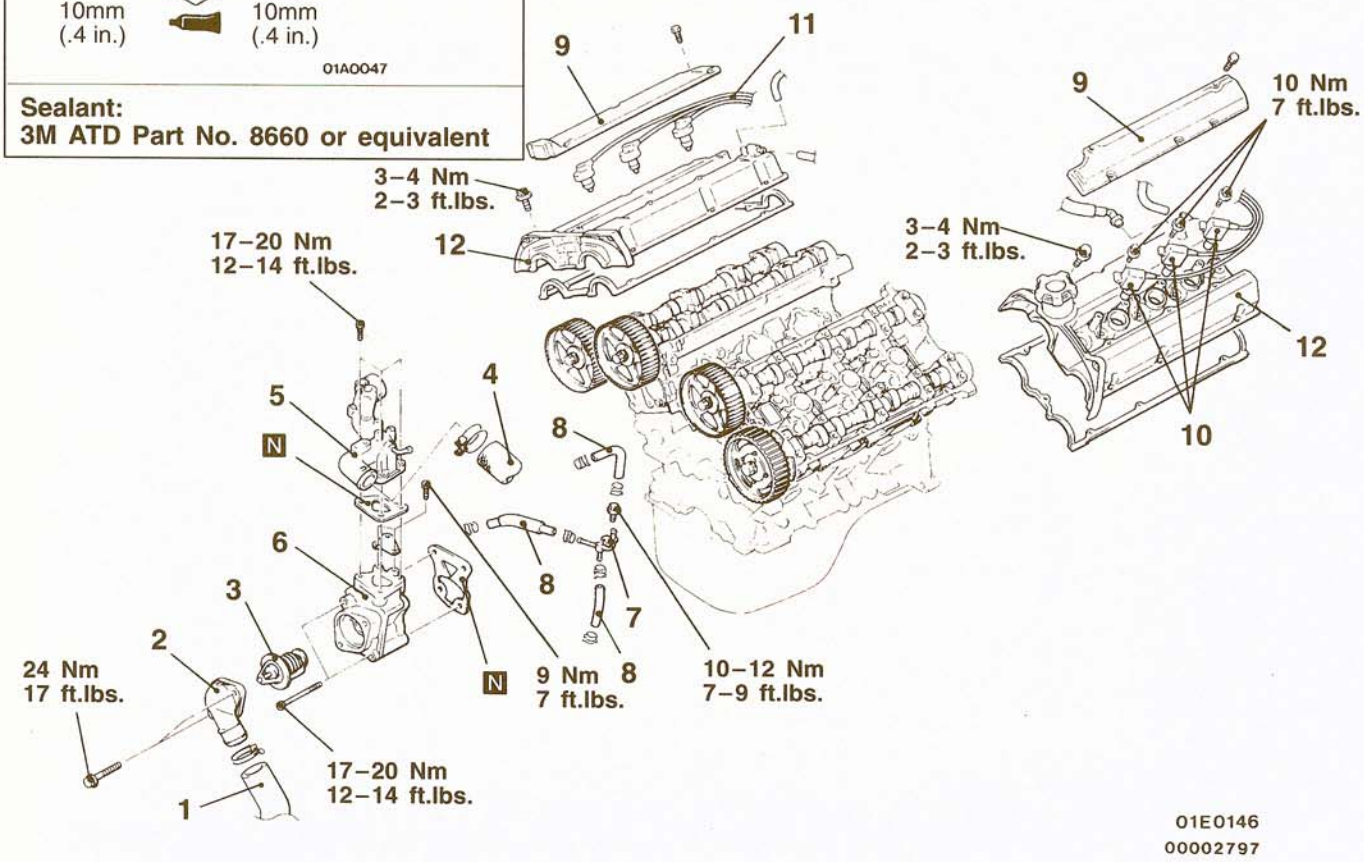


**Removal steps**

1. Radiator lower hose connection
2. Water inlet fitting
3. Thermostat
4. Radiator upper hose connection
5. Water outlet fitting
6. Thermostat case
7. Water line joint
8. Water hose
9. Center cover
10. Ignition coil
11. Spark plug cable
12. Rocker cover

▶E◀

**TSB Revision**

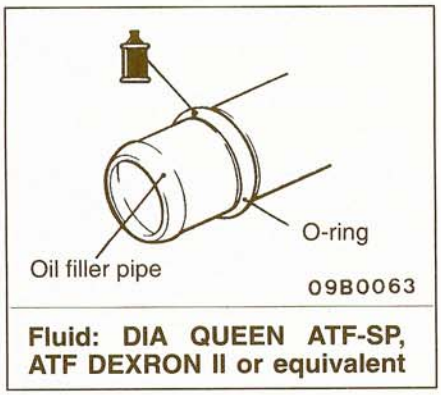


**Fluid: DIA QUEEN ATF-SP, ATF DEXRON II or equivalent**







**Engine oil**

13. Water outlet pipe
▶C◀ 14. O-ring
15. Water hose
16. Spark plug cable support
▶D◀ 17. Water passage
▶D◀ 18. Gasket
19. Water pipe assembly
▶C◀ 20. O-ring
21. Water hose
22. Oil filler pipe
23. Oil level gage guide
◀A▶ ▶B◀ 24. Cylinder head assembly
▶A◀ 25. Cylinder head gasket

**TSB Revision**

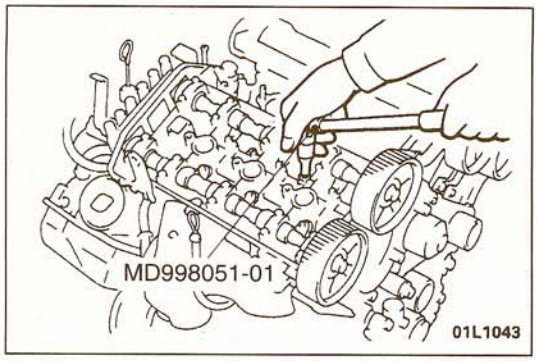


## REMOVAL SERVICE POINT

### ◀A▶ CYLINDER HEAD ASSEMBLY REMOVAL

Using the special tool, after loosening the bolts (in 2 or cycles), remove the cylinder head assembly.

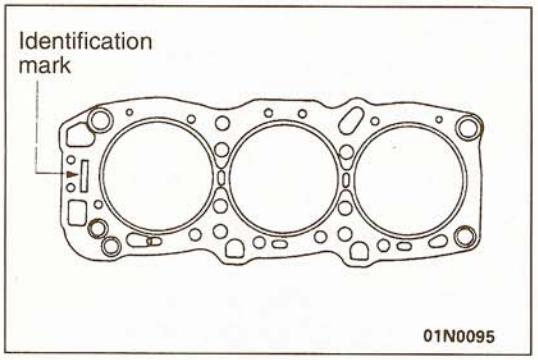


## INSTALLATION SERVICE POINTS

### ▶A◀ CYLINDER HEAD GASKET INSTALLATION

(1) Degrease the mounting surface of the cylinder head gasket.
(2) Lay the cylinder head gasket on cylinder block with the identification mark at front top.

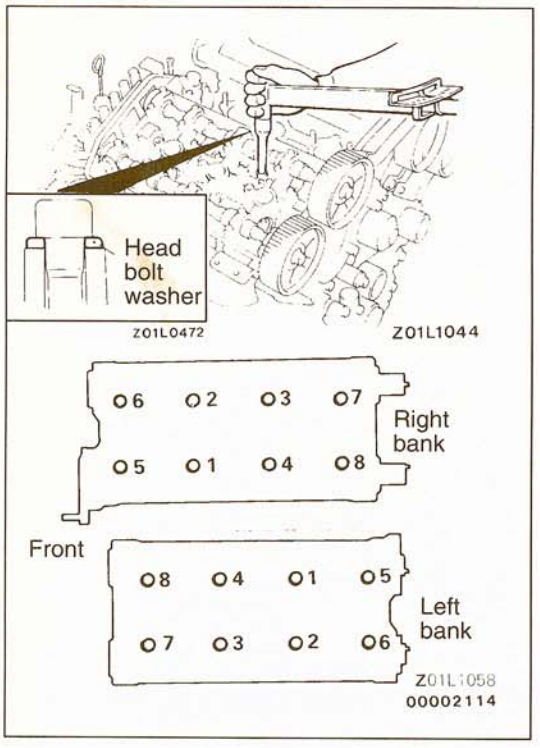


### ▶B◀ CYLINDER HEAD ASSEMBLY INSTALLATION

Using the special tool, tighten the bolts in the order shown in two or three steps.

**Caution**

**Attach the head bolt washer in the direction shown in the figure.**

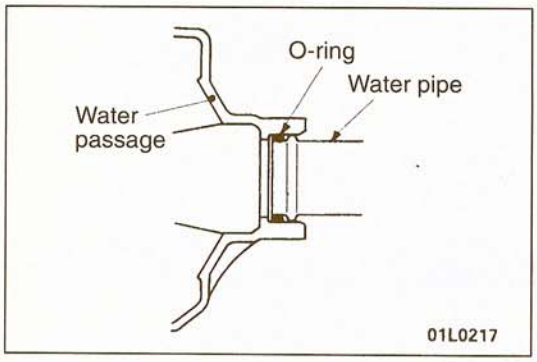


### ▶C◀ O-RINGS INSTALLATION

Rinse the mounting location of the O-ring and water pipe with water, and install the O-ring and water pipe.

**Caution**

1. **Do not apply oil and grease to water pipe O-ring.**
2. **Keep the water pipe connections free of stand, dus etc.**
3. **Insert water pipe until its end bottoms.**

**TSB Revision**

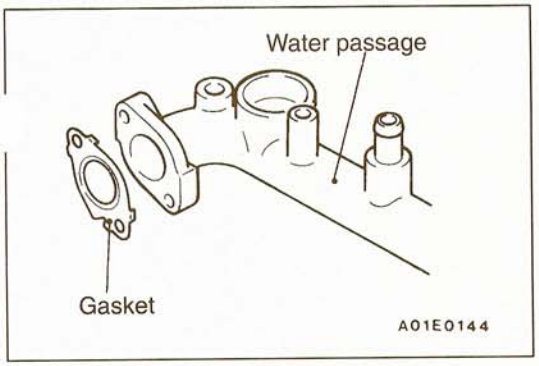


### ▶D◀ INSTALLATION OF GASKET AND WATER PASSAGE

(1) Install the gasket to the water passage so that it faces as shown in the illustration.
(2) Install the water passage to the cylinder head.

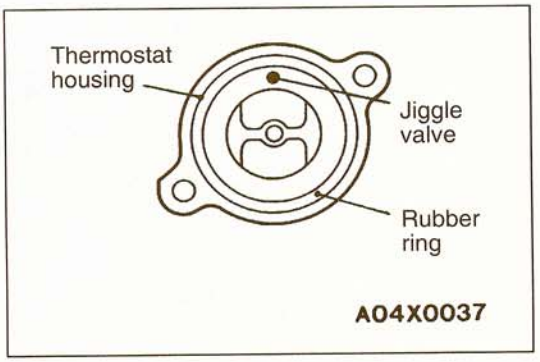


### ▶E◀ INSTALLATION OF THERMOSTAT

Install the thermostat so that the jiggle valve is facing straight up and is aligned with the mark on the thermostat case as shown in the illustration.

**Caution**

**Make absolutely sure that no oil is adhering to the rubber ring of the thermostat. In addition, be careful not to fold over or scratch the rubber ring when inserting.**

# TIMING BELT

11200430145

## REMOVAL AND INSTALLATION

**Pre-removal Operation**
- Radiator Removal (Refer to GROUP 14 – Radiator.)
- Generator Assembly Removal (Refer to GROUP 16 – Generator.)
- Battery and Battery Tray Removal
- Under Skid Plate, Undercover Removal

**Post-installation Operation**
- Under Skid Plate, Undercover Installation
- Battery and Battery Tray Installation
- Generator Installation (Refer to GROUP 16 – Generator.)
- Radiator Installation (Refer to GROUP 14 – Radiator.)
- Engine Adjustment

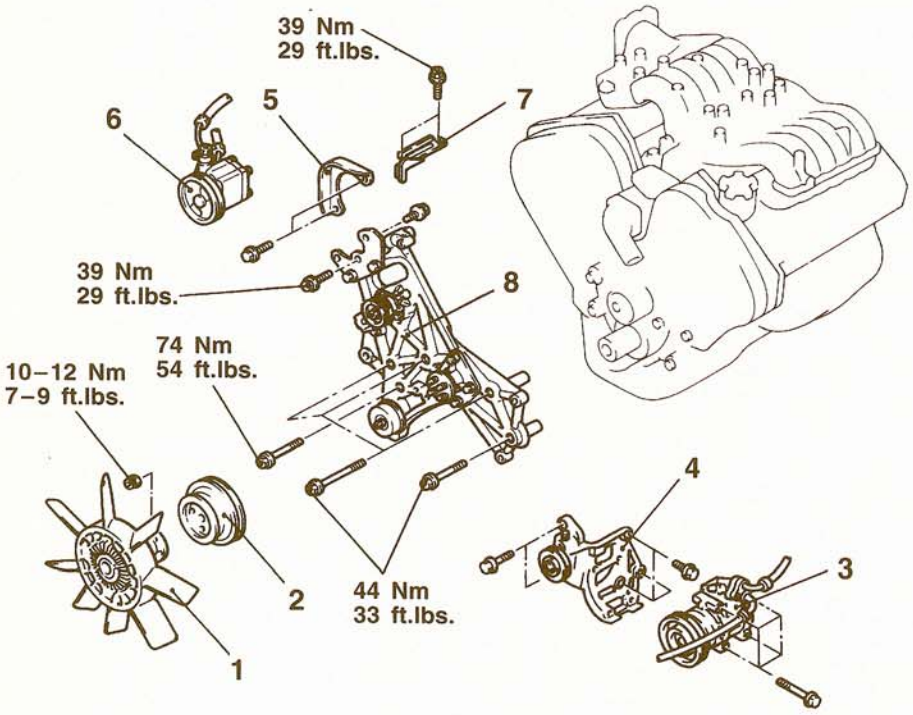


Z01E0124

| Symbol | Hardness category | d × L mm (in.) | Symbol |
|---|---|---|---|
| A | 7T | 10 × 80 (.39 × 3.15) | 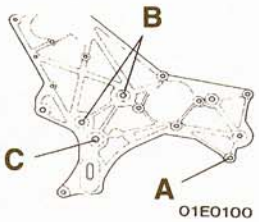  01E0100 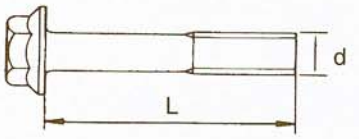  04U0025 00002799 |
| B | | 10 × 100 (.39 × 3.93) | |
| C | | 12 × 100 (.47 × 3.93) | |

**Removal steps**

◀A▶
1. Cooling fan clutch assembly
2. Water pump pulley
3. Compressor <A/C>
4. Compressor bracket <A/C>
5. Cover
6. Power steering oil pump
7. Accessory mount stay
8. Accessory mount

**TSB Revision**

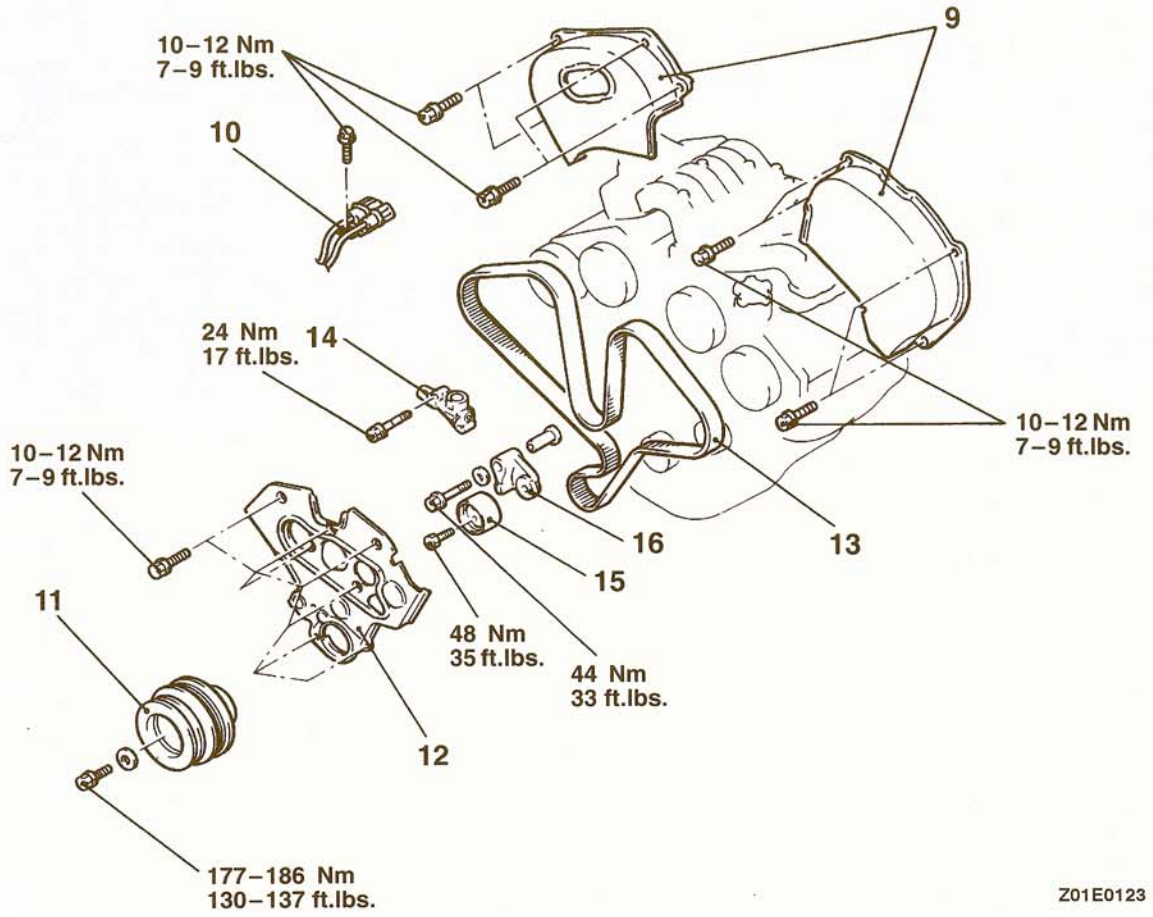


9. Timing belt upper cover
10. Crankshaft position sensor connector
◀B▶ ▶D◀ 11. Crankshaft pulley
12. Timing belt lower cover
▶C◀ • Timing belt tension adjustment
◀C▶ ▶B◀ 13. Timing belt
▶A◀ 14. Auto-tensioner
15. Tension pulley
16. Tension arm assembly

## REMOVAL SERVICE POINTS

### ◀A▶ COMPRESSOR <A/C>/OIL PUMP (POWER STEERING) REMOVAL

Remove the oil pump and air conditioning compressor (with the hose attached).

NOTE
Suspend the removed oil pump (by using wire or similar material) at a place where no damage will be caused during removal/installation of the engine assembly.

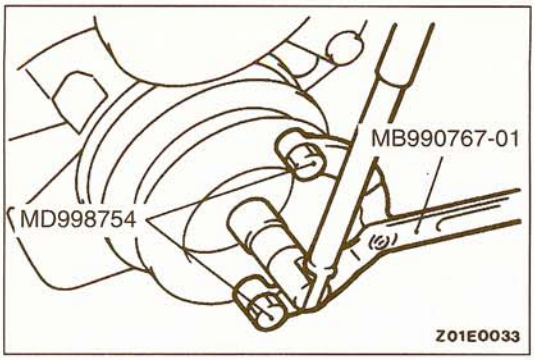


### ◀B▶ CRANKSHAFT PULLEY REMOVAL

Use the special tools to remove the crankshaft pulley from the crankshaft.

**Caution**
**Use only the specified special tools, or a damaged pulley damper could result.**

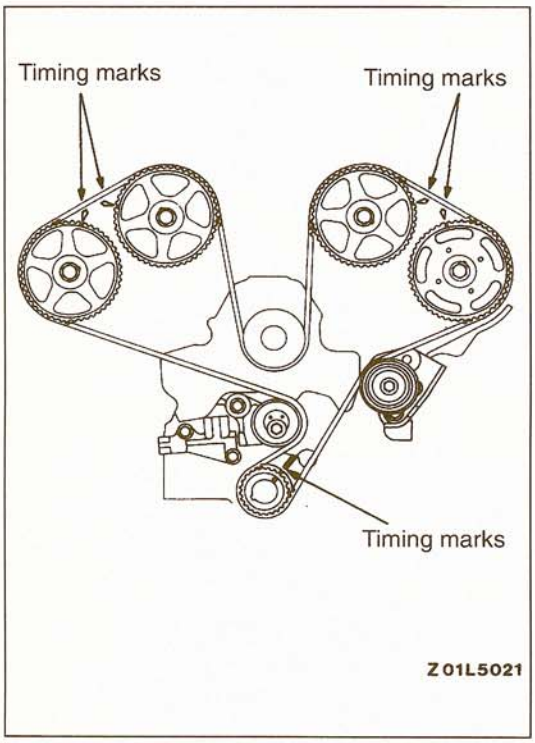


### ◀C▶ TIMING BELT REMOVAL

(1) Align the timing marks.

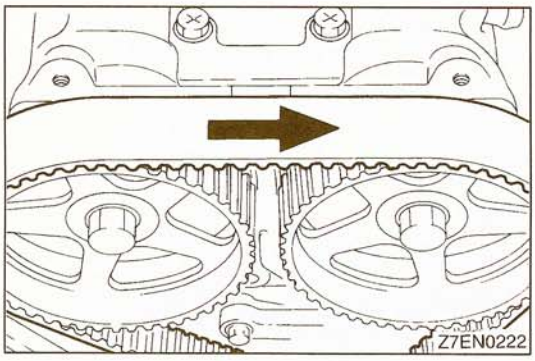


(2) Loosen the center bolt on the tension pulley to remove the timing belt.

**Caution**
1. **If the timing belt is to be re-used, mark the flat side of the belt with an arrow indicating the direction of rotation.**
2. **The cam of the front bank camshaft lifts the valve by means of the rocker arm and the camshaft sprocket will easily turn because of the valve spring force, so be careful not to insert your fingers, etc.**

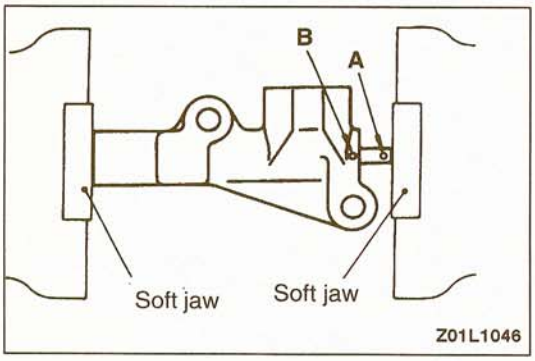


## INSTALLATION SERVICE POINTS

### ▶A◀ AUTO-TENSIONER INSTALLATION

(1) If the auto-tensioner rod is in its fully extended position, reset it as follows.
   1) While keeping the auto-tensioner level, clamp it in a vise with soft jaws.
   2) Push in the push rod little by little with the vise until the set hole **A** in the rod is aligned with set hole **B** in the cylinder.

**Caution**
1. **The auto-tensioner must be placed at a right angle to the pressing surface of the press or vise.**
2. **Push in the rod slowly to prevent it from being damaged.**

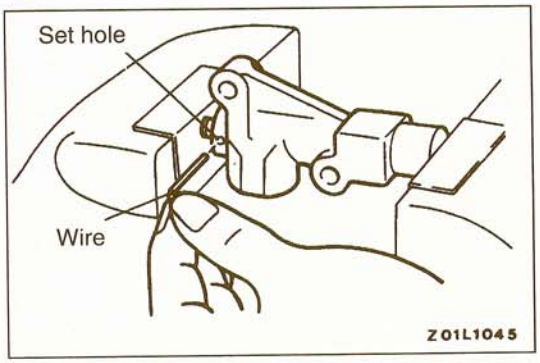


3) Insert a wire with a diameter of 1.4 mm (.055 in.) into the set holes.
NOTE
The wire should be as stiff as possible (such as piano wire, etc.), and should be bent into the shape of an "L".

4) Unclamp the auto-tensioner from the vise.

(2) Install the auto-tensioner.

**Caution**
**Leave the wire installed to the auto-tensioner.**

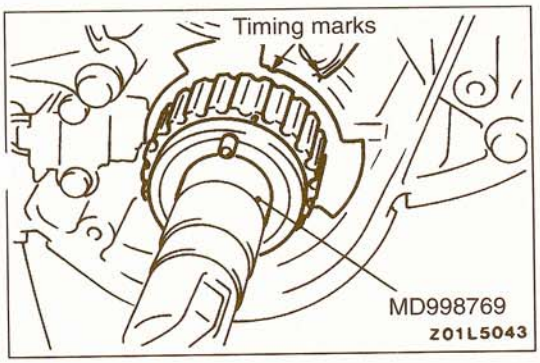


**▶B◀ TIMING BELT INSTALLATION**

(1) Install the crankshaft pulley and turn the crankshaft sprocket timing mark forward 3 teeth to move the piston slightly past No. 1 cylinder top dead center.

**Caution**
**If the camshaft sprocket is turned while the No. 1 cylinder is at compression top dead center, there is a danger that the valve and piston will interfere.**

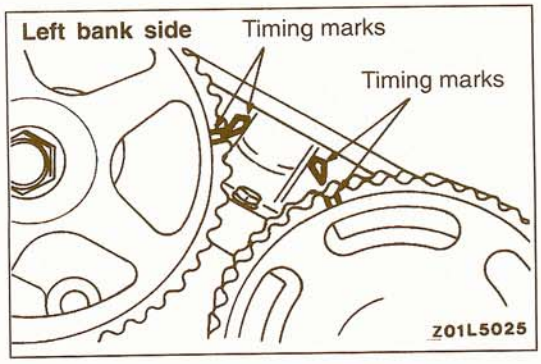


(2) Align the timing mark of the left bank side camshaft sprocket.

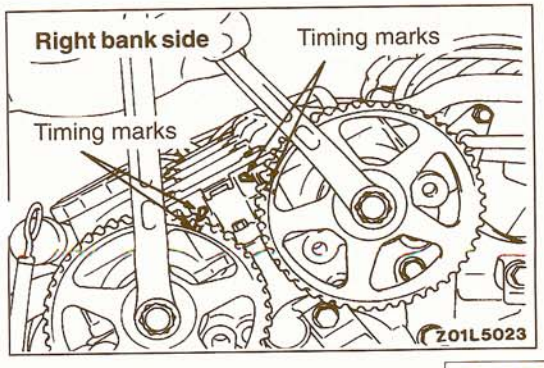


(3) Align the timing mark of the right bank side camshaft sprocket and hold the sprocket with a wrench so that it doesn't turn.

**Caution**
1. **The camshaft sprocket will easily turn because of the valve spring force, so be careful not to insert your fingers, etc.**
2. **If the sprocket on one side of the right bank is turned one full revolution while the sprocket timing marks on the opposite side of the right bank are aligned, the intake and exhaust valves may cause interference.**

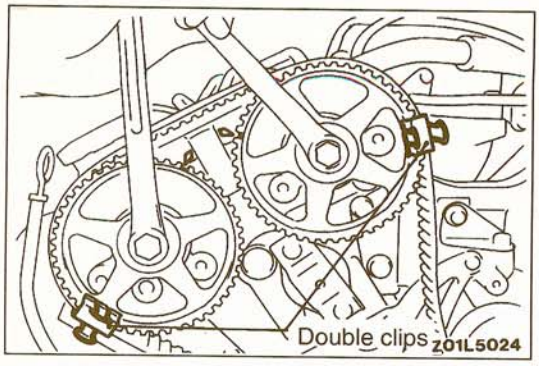


(4) Check that the camshaft sprocket timing mark of the right bank side is aligned and clamp timing belt with double clips.

**Caution**
**If the timing belt is being reused, install so that the arrow marked on it at the time of removal is pointing in the clockwise direction.**

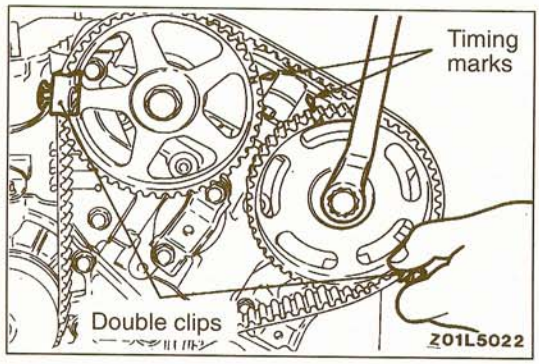


(5) Set the timing belt onto the water pump pulley.
(6) Check that the camshaft sprocket timing mark of the left bank side is aligned and clamp the timing belt with double clips.
(7) Set the timing belt onto the idler pulley.

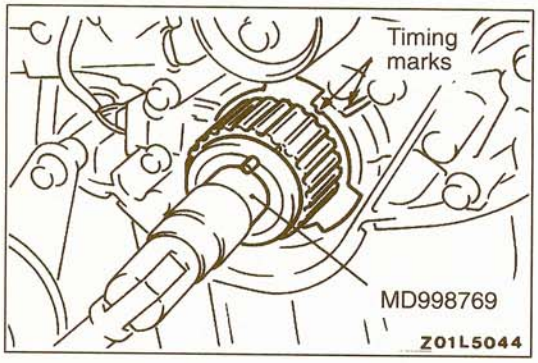


(8) After aligning the crankshaft sprocket timing marks, turn the crankshaft one turn counterclockwise.
(9) Set the timing belt onto the crankshaft sprocket.
(10) Set the timing belt onto the tension pulley.

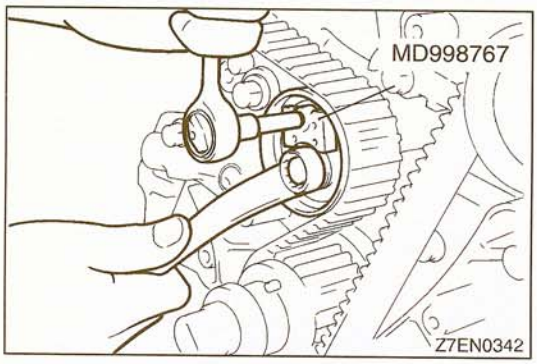


(11) Place the tension pulley pin hole so that it is towards the top. Press the tension pulley onto the timing belt, and then provisionally tighten the fixing bolt.
(12) Align the crankshaft sprocket timing marks.
(13) Check that each of the sprocket timing marks is aligned.
(14) Remove the 4 double clips.

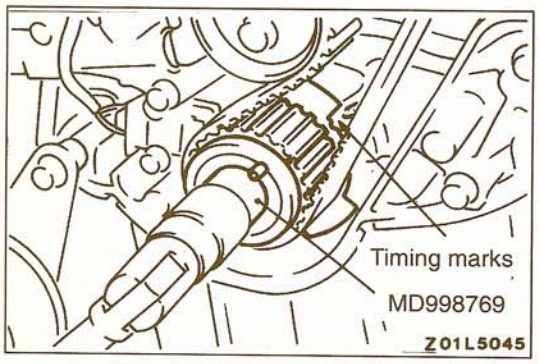


### ▶C◀ TIMING BELT TENSION ADJUSTMENT

(1) After turning the crankshaft 1/4 of a turn counterclockwise, turn it clockwise to the position where the timing marks are aligned.

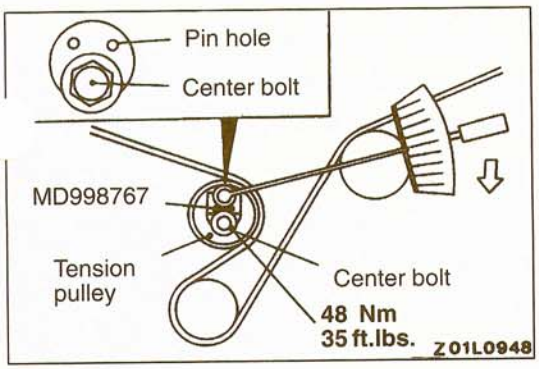


(2) Loosen the center bolt on the tension pulley. Then, while using the special tool and torque wrench to apply tensioning torque to the timing belt, and tighten the center bolt to the specified torque.

**Reference value:**
**9.4 Nm (7 ft.lbs.) (Timing belt tensioning torque)**

**Caution**
**Make sure that the tension pulley does not rotate when the center bolt is tightened.**

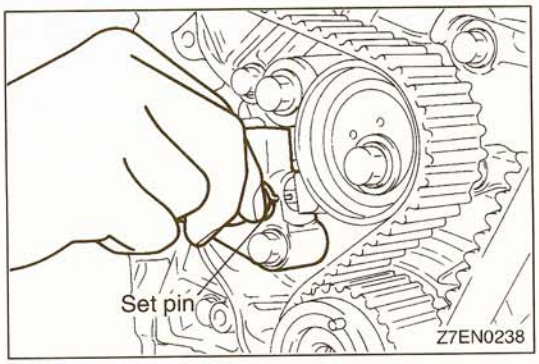


(3) Remove the set pin from the auto-tensioner. Make sure that the set pin can be easily removed at this time.
(4) Rotate the crankshaft two turns clockwise and leave it as is for five minutes or more. Then, check again that the set pin can be easily removed from and installed to the auto-tensioner.

NOTE
Even if the set pin cannot be easily inserted, the auto-tensioner is normal if its rod protrusion is within the standard value range.

**Standard value (A): 3.8–4.5 mm (.149 to .177 in.)**

If the protrusion is out of specification, repeat steps (1) to (4).
(5) Check again that the timing marks on all sprockets are aligned properly.

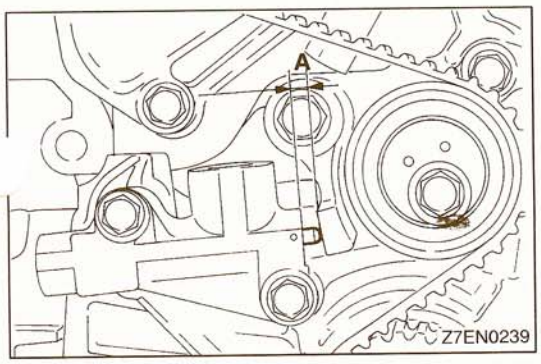


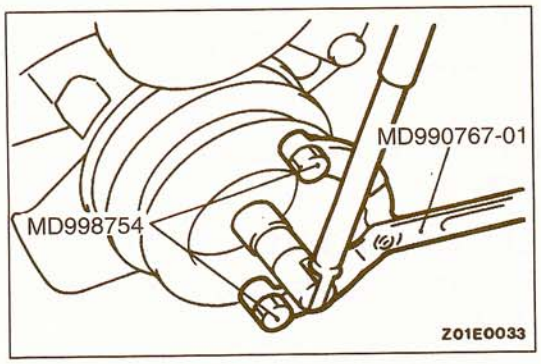


### ▶D◀ CRANKSHAFT PULLEY INSTALLATION

Use the special tools to attach the crankshaft pulley to the crankshaft.

**Caution**
**Use only the specified special tools, or a damaged pulley damper could result.**

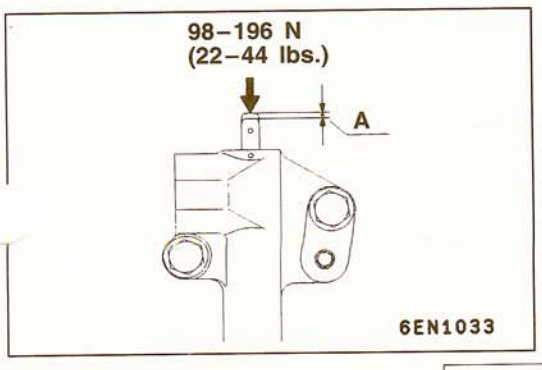


## INSPECTION

11200440025

### AUTO-TENSIONER

(1) Hold the auto-tensioner by hand and measure contraction (A) when pressing the tip of the rod on a steel (cylinder block, etc.) with a force of 98–196 N (22–44 lbs.).

**Standard value (A): 1 mm (.04 in.) or less**

(2) If not within the standard value, replace the auto-tensioner.

# ENGINE OIL COOLER

12100130032

## REMOVAL AND INSTALLATION

**Pre-removal Operation**
- Radiator Grille Removal

**Post-installation Operation**
- Radiator Grille Installation
- Engine Oil Supplying and Checking

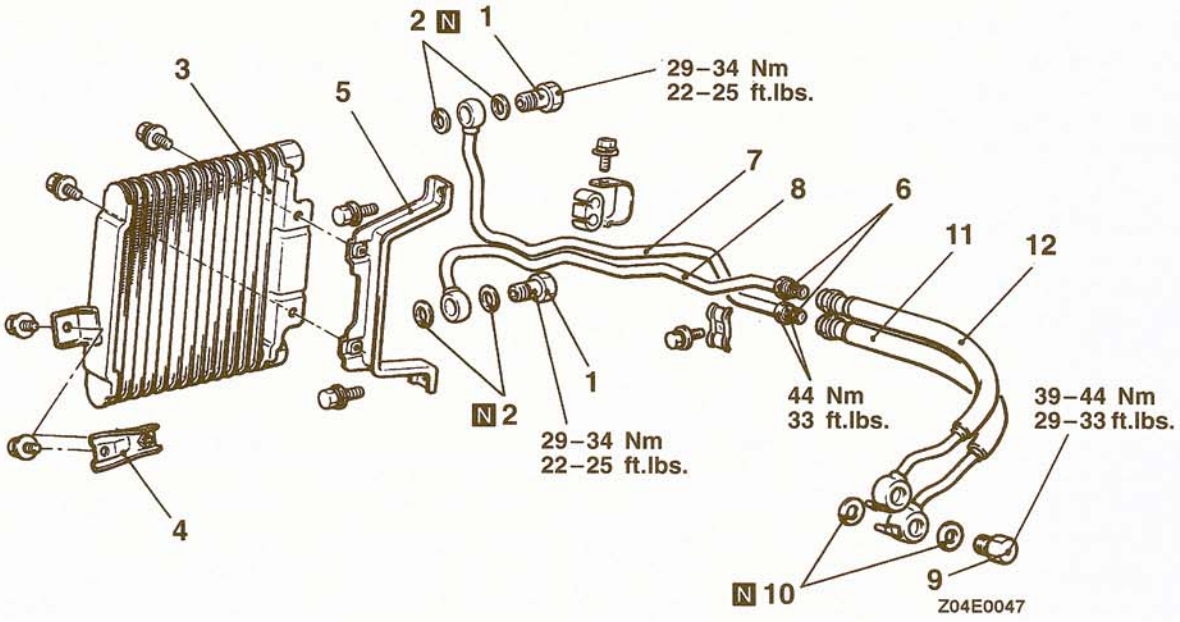


**Removal steps**

◀A▶
1. Eye bolts
2. Gaskets
3. Engine oil cooler
4. Stay
5. Bracket
6. Engine oil cooler hose connection
7. Return pipe
8. Feed pipe

▶B◀ 9. Eye bolts
10. Gaskets

▶B◀ 11. Return hose

▶B◀ 12. Feed hose

### REMOVAL SERVICE POINT

#### ◀A▶ EYE BOLTS REMOVAL

**Caution**
**Be sure to hold the weld nut of the oil cooler while loosening the eye bolt.**

### INSTALLATION SERVICE POINT

#### ▶B◀ FEED HOSE/RETURN HOSE/EYE BOLTS (ENGINE SIDE) INSTALLATION

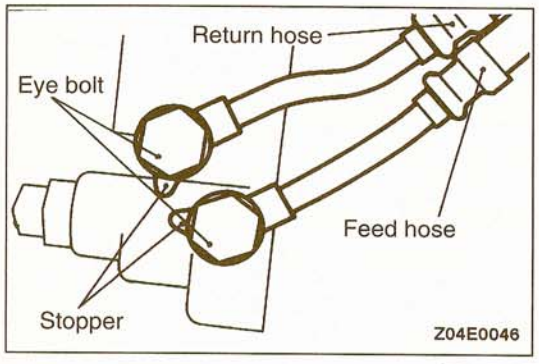


(1) Provisionally tighten the eye bolts, and then install the clamp so that it touches the crimps on the hoses.
(2) Fully tighten the eye bolt on the return hose.
(3) Place the feed hose against the stopper, and then fully tighten the eye bolt on the feed hose.

### INSPECTION

1210014(

- Check for foreign material between the oil cooler fins.
- Check the oil cooler fins for bends or damage.
- Check the oil cooler hoses for crack, damage, clogging or deterioration.

**TSB Revision**

# ENGINE OVERHAUL

# <3.5L>

## CONTENTS

11309000128


BRACKET ..... 56

CRANKSHAFT, FLYWHEEL AND DRIVE PLATE ..... 50

CYLINDER HEAD AND VALVE ..... 31

EXHAUST MANIFOLD ..... 26

GENERATOR AND DRIVE BELT ..... 11

IGNITION SYSTEM ..... 14

INTAKE MANIFOLD AND FUEL PARTS ..... 22

INTAKE MANIFOLD PLENUM AND THROTTLE BODY ..... 13

OIL PAN AND OIL PUMP ..... 38

PISTON AND CONNECTING ROD ..... 43

ROCKER ARMS AND CAMSHAFT ..... 27

SPECIAL TOOLS ..... 9

SPECIFICATIONS ..... 2

- General Specifications ..... 2
- Rework Dimensions ..... 5
- Sealant ..... 8
- Service Specifications ..... 3
- Torque Specifications ..... 6

TIMING BELT ..... 15

# SPECIFICATIONS

11300020031

## GENERAL SPECIFICATIONS

| Descriptions | | | Specifications |
|---|---|---|---|
| Type | | | 60° V, DOHC (per bank) |
| Number of cylinders | | | 6 |
| Combustion chamber | | | Compact type |
| Total displacement $cm^3$ (cu.in.) | | | 3,497 (213.4) |
| Cylinder bore mm (in.) | | | 93.0 (3.66) |
| Piston stroke mm (in.) | | | 85.8 (3.38) |
| Compression ratio | | | 9.5 |
| Valve timing (Camshaft identification mark:P, K) | Intake valve | Opens (BTDC) | 11.5° |
| | | Closes (ABDC) | 60.5° |
| | Exhaust valve | Opens (BBDC) | 20.5° |
| | | Closes (ATDC) | 43.5° |
| Lubrication system | | | Pressure feed, full-flow filtration |
| Oil pump type | | | Trochoid type |
| Cooling system | | | Water-cooled forced circulation |
| Water pump type | | | Centrifugal impeller type |
| EGR type | | | Single type |
| Injector type and number | | | Electromagnetic, 6 |
| Injector identification mark | | | BDH240 |
| Fuel regulated pressure kPa (psi) | | | 335 (47.6) |
| Throttle bore mm (in.) | | | 60 (2.36) |
| Throttle position sensor | | | Variable resistor type |
| Closed throttle position switch | | | Movable contact type, within throttle position sensor |

## SERVICE SPECIFICATIONS

11300030171

| Items | | | Standard value | Limit |
|---|---|---|---|---|
| **Generator and ignition system** | | | | |
| Drive belt | Tension N (lbs.) | New belt | 637–833 (143–187) | – |
| | | Used belt | 441–539 (99–121) | – |
| | Deflection A mm (in.) (Reference value) | New belt | 4.0–5.0 (.16–.20) | – |
| | | Used belt | 5.5–6.5 (.22–.26) | – |
| | Deflection B mm (in.) (Reference value) | New belt | 5.5–7.5 (.22–.30) | – |
| | | Used belt | 8.0–9.0 (.31–.35) | – |
| **Fuel and emission parts** | | | | |
| Injector coil resistance Ω | | | 13–16 at 20°C (68°F) | – |
| **Rocker arms and camshaft** | | | | |
| Camshaft | Camheight mm (in.) | Intake (Identification mark: P) | 35.20 (1.39) | 34.70 (1.37) |
| | | Exhaust (Identification mark: K) | 34.91 (1.37) | 34.41 (1.35) |
| Camshaft | Journal diameter mm (in.) | | 25.96 (1.02) | – |
| **Cylinder head and valve** | | | | |
| Cylinder head | Flatness of gasket surface mm (in.) | | 0.03 (.0012) | 0.2 (.008) |
| | Grinding limit of gasket surface *Includes/combined with cylinder block grinding mm (in.) | | – | *0.2 (.008) |
| | Overall height mm (in.) | | 132 (5.20) | – |
| Valve | Thickness of valve head (margin) mm (in.) | Intake | 1.0 (.039) | 0.5 (.019) |
| | | Exhaust | 1.5 (.059) | 1.0 (.039) |
| | Stem diameter mm (in.) | Intake | 6.6 (.260) | – |
| | | Exhaust | 6.5 (.256) | – |
| | Stem to guide clearance mm (in.) | Intake | 0.02–0.05 (.0008–.0020) | 0.10 (.004) |
| | | Exhaust | 0.05–0.09 (.0020–.0035) | 0.15 (.006) |
| Valve face angle | | | 45°–45.5° | – |

· Between cooling fan pulley and crankshaft pulley
. Between cooling fan pulley and generator

**TSB Revision**

| Items | | Standard value | Limit |
|---|---|---|---|
| **Cylinder head and valve** | | | |
| Valve spring | Free height mm (in.) | 46.4 (1.83) | 45.4 (1.79) |
| | Load/installed height N/mm (lbs./in.) | 240/37.9 (52.9/1.492) | – |
| | Out of squareness | 2° or less | Max. 4° |
| Valve seat | Valve contact width mm (in.) | 0.9–1.3 (.035–.051) | – |
| Valve guide | Inner diameter mm (in.) | 6.6 (.260) | – |
| | Outer diameter mm (in.) | 12.1 (.476) | – |
| **Front case, oil pump and oil pan** | | | |
| Oil pump | Tip clearance mm (in.) | 0.06–0.18 (.0024–.0071) | – |
| | Side clearance mm (in.) | 0.04–0.10 (.0016–.0039) | – |
| | Body clearance mm (in.) | 0.10–0.18 (.0039–.0071) | 0.35 (.0138) |
| Oil cooler by-pass valve | Dimension (L) [Normal temperature] mm (in.) | 34.5 (1.36) | – |
| | By-pass hole closing temperature [97–103°C (207–217°F) or more] mm (in.) | 40 (1.57) or more | – |
| | Oil pressure at curb idle speed kPa (psi) [Conditions: oil temperature is 75–90°C (167–194°F)] | 80 (11.4) or more | – |
| **Piston and connecting rod** | | | |
| Piston | Outer diameter mm (in.) | 93.0 (3.66) | – |
| Piston ring | Ring to ring groove clearance No. 1 ring mm (in.) | 0.03–0.07 (.0012–.0028) | 0.1 (.004) |
| | Ring to ring groove clearance No. 2 ring mm (in.) | 0.02–0.06 (.0008–.0024) | 0.1 (.004) |
| | End gap No. 1 ring mm (in.) | 0.30–0.45 (.0118–.0177) | 0.8 (.031) |
| | End gap No. 2 ring mm (in.) | 0.45–0.60 (.0177–.0236) | 0.8 (.031) |
| | End gap oil ring mm (in.) | 0.10–0.35 (.0039–.0137) | 1.0 (.039) |
| Piston pin | Outer diameter mm (in.) | 22.0 (.87) | – |
| | Press-in load N (lbs.) | 7,350–17,200 (1,652–3,867) | – |
| | Press-in temperature | Room temperature | – |
| Crankshaft | Oil clearance of pin mm (in.) | 0.03–0.05 (.0012–.0020) | 0.1 (.004) |
| Connecting rod | Big end side clearance mm (in.) | 0.10–0.25 (.0039–.0098) | 0.4 (.016) |

**TSB Revision**

| Items | | Standard value | Limit |
|---|---|---|---|
| **Crankshaft, flywheel and drive plate** | | | |
| Crankshaft | End play mm (in.) | 0.05–0.25 (.0020–.0098) | 0.3 (.012) |
| | Journal outer diameter mm (in.) | 64 (2.52) | – |
| | Pin outer diameter mm (in.) | 55 (2.17) | – |
| | Oil clearance of journal mm (in.) | 0.02–0.04 (.0008–.0020) | 0.1 (.0039) |
| Piston | Piston to cylinder clearance mm (in.) | 0.03–0.05 (.0012–.0020) | – |
| Cylinder block | Flatness of gasket surface mm (in.) | 0.05 (.002) | 0.1 (.004) |
| | Grinding limit of gasket surface *Includes/combined with cylinder block grinding mm (in.) | – | *0.2 (.008) |
| | Overall height mm (in.) | 227.9–228.1 (8.97–8.98) | – |
| | Cylinder bore inner diameter mm (in.) | 93.0 (3.66) | – |

## REWORK DIMENSIONS

| Items | | | Standard value | Limit |
|---|---|---|---|---|
| **Cylinder head and valve** | | | | |
| Cylinder head | Oversize valve guide hole (both intake and exhaust) mm (in.) | 0.05 | 12.05–12.07 (.4744–.4752) | – |
| | | 0.25 | 12.25–12.27 (.4823–.4831) | – |
| | | 0.50 | 12.50–12.52 (.4921–.4929) | – |
| | Oversize intake valve seat ring hole mm (in.) | 0.3 | 36.30–36.33 (1.4291–1.4303) | – |
| | | 0.6 | 36.60–36.63 (1.4409–1.4421) | – |
| | Oversize exhaust valve seat ring hole mm (in.) | 0.3 | 33.30–33.33 (1.3110–1.3122) | – |
| | | 0.6 | 33.60–33.63 (1.3228–1.3240) | – |
| **Crankshaft, flywheel and drive plate** | | | | |
| Crankshaft | Out of roundness and taper of journal and pin mm (in.) | | 0.003 (.0001) | – |

## TORQUE SPECIFICATIONS

| Items | | Nm | ft.lbs. |
|---|---|---|---|
| **Generator and drive belt** | | | |
| Cooling fan bolt | | 11 | 8 |
| Fan clutch nut | | 11 | 8 |
| Cooling fan bracket bolt | | 41 | 30 |
| Drive belt tensioner nut | | 26 | 19 |
| Timing indicator bolt | | 11 | 8 |
| Generator bolt | M8 | 21 | 15 |
| | M10 | 51 | 38 |
| Accessory mount bolt | M10 | 44 | 32 |
| | M12 | 74 | 55 |
| Accessory mount stay bolt | | 23 | 17 |
| Crankshaft bolt | | 182 | 134 |
| **Intake manifold plenum and throttle body** | | | |
| Intake manifold plenum cover bolt | | 11 | 8 |
| Intake manifold plenum bolt and nut | | 18 | 13 |
| Induction control valve bolt and nut | | 9 | 6 |
| Ignition power transistor bolt | | 10 | 7 |
| Vacuum pipe A bolt | | 10 | 7 |
| Water outlet fiting bracket bolt | | 19 | 14 |
| Manifold differential pressure sensor bolt | | 4.9 | 3.6 |
| EGR pipe bolt | | 18 | 13 |
| Intake manifold plenum stay bolt | | 18 | 13 |
| EGR valve bolt | | 22 | 16 |
| Throttle body bolt | | 12 | 8 |
| **Ignition system** | | | |
| Center cover bolt | | 3 | 2 |
| Spark plug | | 25 | 18 |
| Ignition coil bolt | | 10 | 7 |
| High tension cable support bolt | M6 | 10 | 7 |
| | M8 | 13 | 9 |
| **Timing belt** | | | |
| Crankshaft/camshaft position sensor bolt | | 9 | 7 |
| Auto tensioner bolt | | 24 | 17 |
| Tensioner pulley bolt | | 49 | 35 |
| Tensioner arm bolt | | 44 | 33 |
| Idler pulley bolt | | 55 | 40 |
| Idler pulley bracket bolt | | 42 | 30 |
| Camshaft sprocket bolt | | 88 | 64 |

**TSB Revision**

| Items | | Nm | ft.lbs. |
|---|---|---|---|
| **Intake manifold and fuel parts** | | | |
| Injector and fuel rail bolt | | 12 | 9 |
| Fuel pressure regulator bolt | | 9 | 7 |
| Fuel inlet fitting bolt | | 9 | 7 |
| Fuel pipe bolt | | 9 | 7 |
| Engine coolant temperature gauge unit | | 11 | 8 |
| Engine coolant temperature sensor | | 30 | 22 |
| Water outlet fitting bolt | | 19 | 14 |
| Water inlet fitting bolt | | 24 | 18 |
| Thermostat case bolt | | 19 | 14 |
| Thermostat case bracket bolt | M6 | 9 | 7 |
| | M8 | 19 | 14 |
| Rocker cover bolt | | 4 | 3 |
| Timing belt rear center cover (right and left) bolt | M6 | 11 | 8 |
| | M8 | 23 | 17 |
| Fitting (right and left) bolt | | 19 | 14 |
| Water passage bolt | | 19 | 14 |
| Water (outlet) pipe bolt | | 14 | 10 |
| Intake manifold nut | | 14 | 10 |
| **Exhaust manifold** | | | |
| Oil level gauge guide bolt | | 14 | 10 |
| Heat protector bolt | | 14 | 10 |
| Exhaust manifold nut | | 45 | 33 |
| Water pump fitting bolt | | 24 | 17 |
| Water pump bolt | | 24 | 17 |
| **Rocker arms and camshafts** | | | |
| Bearing cap, front and rear bolt | | 20 | 14 |
| Bearing cap bolt No.2, 3, 4 | | 11 | 8 |
| **Cylinder head and valve** | | | |
| Cylinder head bolt | | 108 | 80 |

| Items | | Nm | ft.lbs. |
|---|---|---|---|
| **Oil pan and oil pump** | | | |
| Oil pressure gauge unit | | 10 | 7 |
| Oil cooler by-pass valve | | 55 | 40 |
| Oil filter bracket bolt | | 24 | 17 |
| Drain plug | | 40 | 29 |
| Oil pan upper bolt | | 6 | 4 |
| Oil pan lower bolt | | 11 | 8 |
| Cover bolt | | 11 | 8 |
| Baffle plate bolt | | 11 | 8 |
| Oil screen bolt | M6 | 9 | 7 |
| | M8 | 19 | 14 |
| Plug | | 45 | 33 |
| Oil pump case bolt | | 14 | 10 |
| Oil pump cover screw | | 10 | 7 |
| **Piston and connecting rod** | | | |
| Connecting rod cap nut | | 34+90°–100° | 25+90°–100° |
| **Crankshaft, flywheel and drive plate** | | | |
| Drive plate bolt | | 75 | 54 |
| Rear plate bolt | | 11 | 8 |
| Oil seal case bolt | | 11 | 8 |
| Bearing cap bolt | | 74 | 54 |
| Knock sensor bracket bolt | | 28 | 21 |
| Knock sensor | | 23 | 17 |
| **Bracket** | | | |
| Bracket bolt | M8 | 22 | 16 |
| | M10 | 41 | 30 |
| | M12 | 75 | 54 |

## SEALANT

11300050146

| Items | Specified sealant | Quantity |
|---|---|---|
| Engine coolant temperature sensor | 3M NUT Locking Part No. 4171 | As required |
| Engine coolant temperature gauge unit | 3M ATD Part No. 8660 | As required |
| Rocker cover | 3M ATD Part No. 8660 | As required |
| Bearing cap | 3M NUT Locking Part No. 4171 | As required |
| Oil pressure switch | 3M ATD Part No. 8660 | As required |
| Oil pressure gauge unit | 3M ATD Part No. 8660 | As required |
| Oil pump case | Mitsubishi Genuine Part No. MD970389 | As required |
| Oil pan | Mitsubishi Genuine Part No. MD970389 | As required |
| Oil seal case | Mitsubishi Genuine Part No. MD970389 | As required |

**TSB Revision**

# SPECIAL TOOLS

11300060156

| Tool | Tool number and name | Supersession | Application |
|---|---|---|---|
| 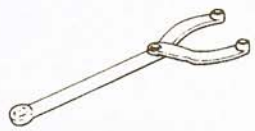 | MB990767<br>End yoke holder<br><br>Use with<br>MD998715 | MB990767-01<br><br>Use with MIT308239 | Holding camshaft sprocket when loosening bolt. |
| 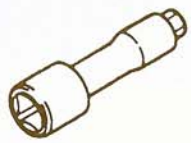 | MD998051<br><br>Cylinder head bolt wrench | MD998051-01 | Loosening and tightening cylinder head bolts |
| 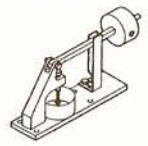 | MD998440<br><br>Leak-down tester | – | Leak-down test of lash adjuster |
| 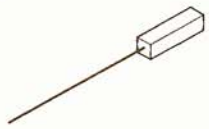 | MD998442<br><br>Air bleed wire | – | Air bleeding of auto lash adjuster |
| 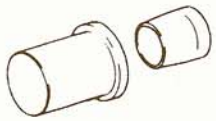 | MD998717<br><br>Crankshaft front oil seal installer | MD998717-01 | Installation of crankshaft front oil seal |
|  | MD998718<br><br>Crankshaft rear oil seal installer | MD998718-01<br>Use with<br>MB990938-01 | Installation of crankshaft rear oil seal |
|  | MD998715<br><br>Pulley holding pins (2) | MIT308239 | Holding camshaft sprocket when loosening or torquing bolt |
|  | MD998735<br><br>Valve spring compressor | MD998735-01 | Removal and installation of valve and related parts |
| 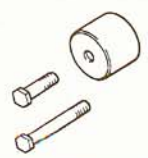 | MD998761<br>Camshaft oil seal installer | MD998761-01 | Installation of camshaft oil seal |

| Tool | Tool number and name | Supersession | Application |
|---|---|---|---|
| 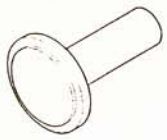 | MD998762<br>Circular packing installer | MD998762-01 | Installation of circular packing |
| 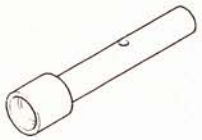 | MD998763<br>Valve stem seal installer | MD998763-01 | Installation of valve stem seal |
| 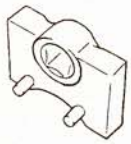 | MD998767<br>Tension pulley wrench | MD998752-01 | Adjustment of timing belt tension |
|  | MD998769<br>Crankshaft spacer | – | Rotation of crankshaft when installing piston and timing belt |
|  | MD998772<br>Valve spring compressor | General service tool | Compression of valve spring |
| 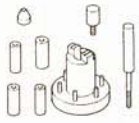 | MD998780<br>Piston pin setting tool | MIT216941 | Removal and installation of piston pin |
| 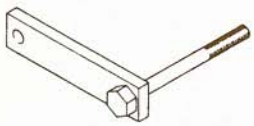 | MD998781<br>Flywheel stopper | – | Loosening and tightening crankshaft bolts |

# GENERATOR AND DRIVE BELT

11300130086

## REMOVAL AND INSTALLATION

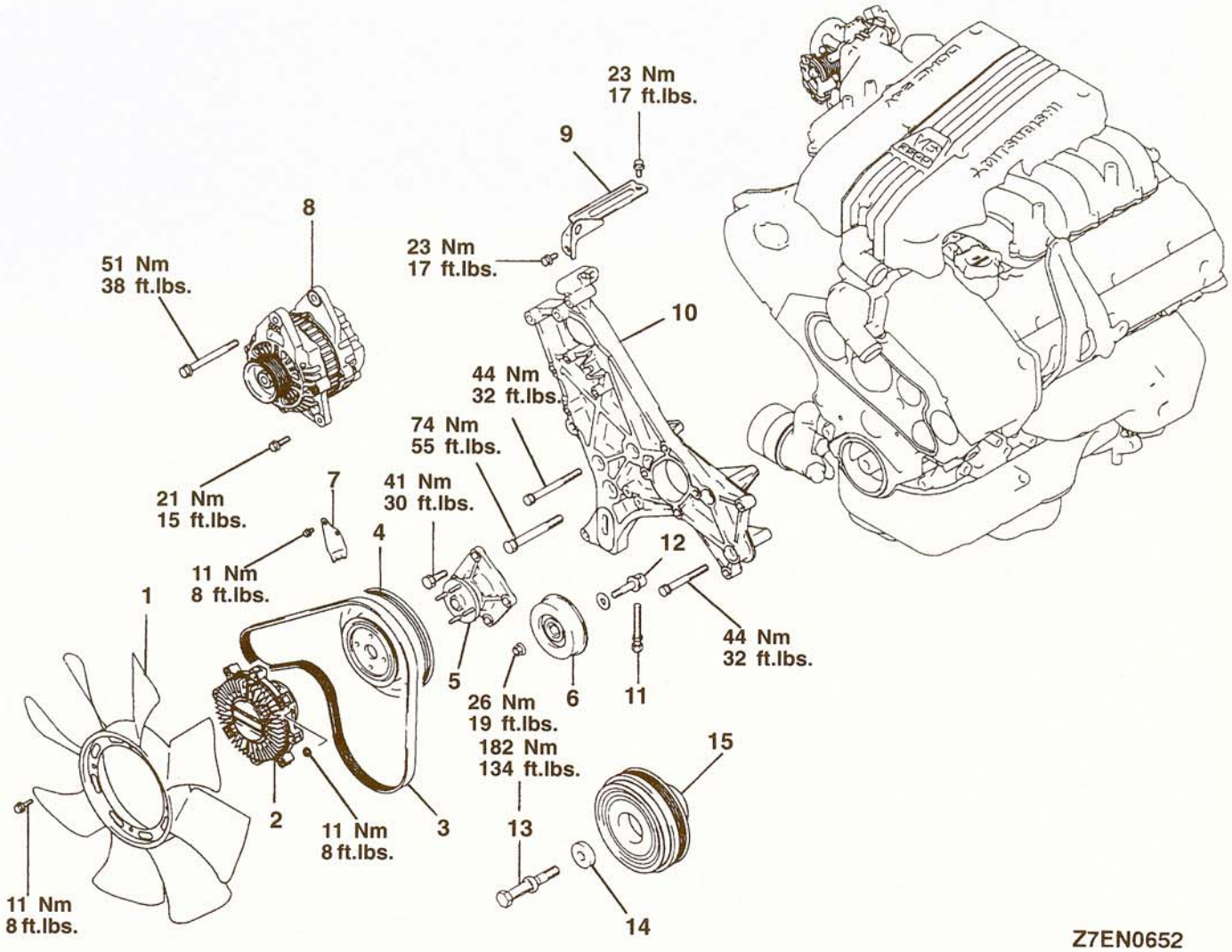


**Removal steps**

1. Cooling fan
2. Fan clutch
▶B◀ 3. Drive belt
4. Cooling fan pulley
5. Cooling fan bracket
6. Drive belt tensioner
7. Timing indicator
8. Generator
9. Accessory mount stay
10. Accessory mount
11. Adjusting bolt
12. Adjusting stud
◀A▶ ▶A◀ 13. Crankshaft bolt
14. Crankshaft pulley washer
15. Damper pulley

TSB Revision

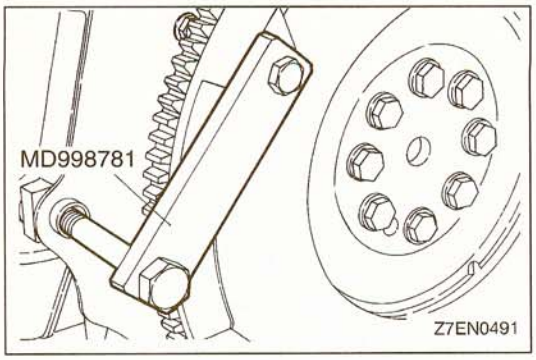


## REMOVAL SERVICE POINT

### ◀A▶ CRANKSHAFT BOLT LOOSENING

(1) Using the special tool, hold the drive plate or flywhee
(2) Remove the crankshaft bolt.

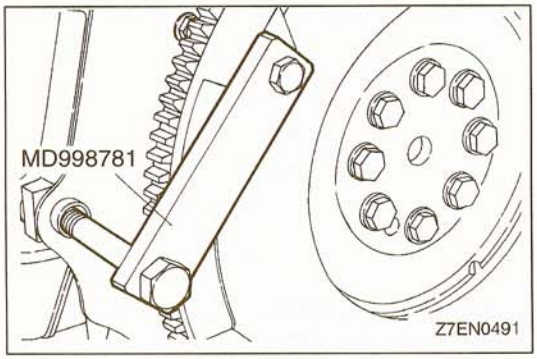


## INSTALLATION SERVICE POINT

### ▶A◀ CRANKSHAFT BOLT TIGHTENING

(1) Using the special tool, hold the drive plate or flywheel.
(2) Install the crankshaft bolt.

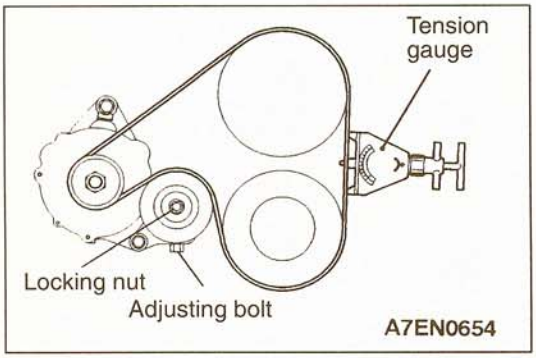


### ▶B◀ DRIVE BELT TENSION ADJUSTMENT

(1) Use a belt tension gauge to check belt tension, or check deflection by applying 98 N (22 lbs.) to the shown point.

**Standard value:**

| | | | |
|---|---|---|---|
| **Tension N (lbs.)** | | **New belt** | **637–833 (143–187)** |
| | | **Used belt** | **441–539 (99–121)** |
| **Deflection mm (in.) <Reference value>** | **A** | **New belt** | **4.0–5.0 (.16–.20)** |
| | | **Used belt** | **5.5–6.5 (.22–.26)** |
| | **B** | **New belt** | **5.5–7.5 (.22–.30)** |
| | | **Used belt** | **8.0–9.0 (.31–.35)** |

**A: Between cooling fan pulley and crankshaft pulley**
**B: Between cooling fan pulley and generator**

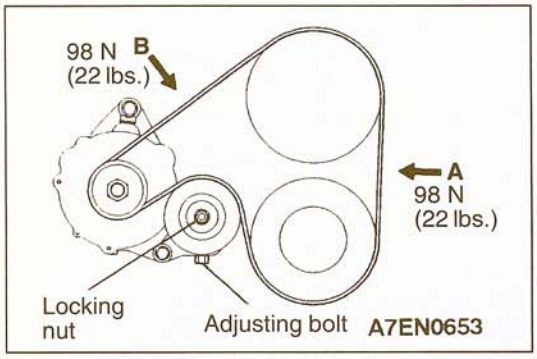

# INTAKE MANIFOLD PLENUM AND THROTTLE BODY

11300330073

## REMOVAL AND INSTALLATION

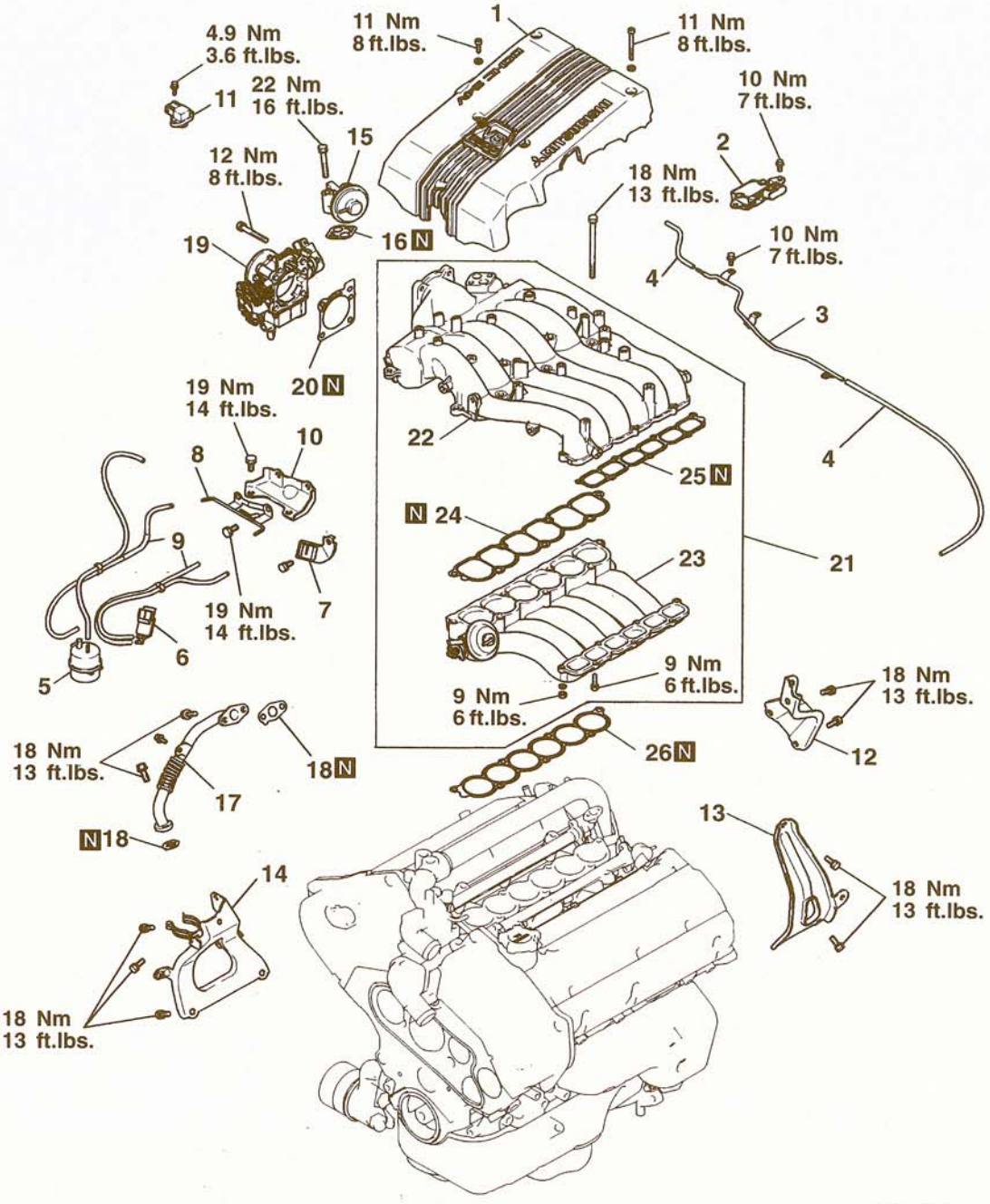


7EN0947

### Removal steps

1. Intake manifold plenum cover
2. Ignition power transistor
3. Vacuum pipe A
4. Vacuum hose A
5. Vacuum tank
6. Variable induction control solenoid
7. Variable induction control solenoid bracket
8. Vacuum pipe B
9. Vacuum hose B
10. Water outlet fitting bracket
11. Manifold differential pressure sensor
12. Intake manifold plenum stay, rear
13. Intake manifold plenum stay, left
14. Intake manifold plenum stay, right
15. EGR valve
16. EGR valve gasket
17. EGR pipe
18. EGR pipe gasket
19. Throttle body
20. Throttle body gasket
21. Intake manifold plenum assembly
22. Intake manifold plenum, upper
23. Induction control valve assembly
24. Induction control valve gasket, S
25. Induction control valve gasket, P
26. Intake manifold plenum gasket

**TSB Revision**

# IGNITION SYSTEM

11300160054

## REMOVAL AND INSTALLATION

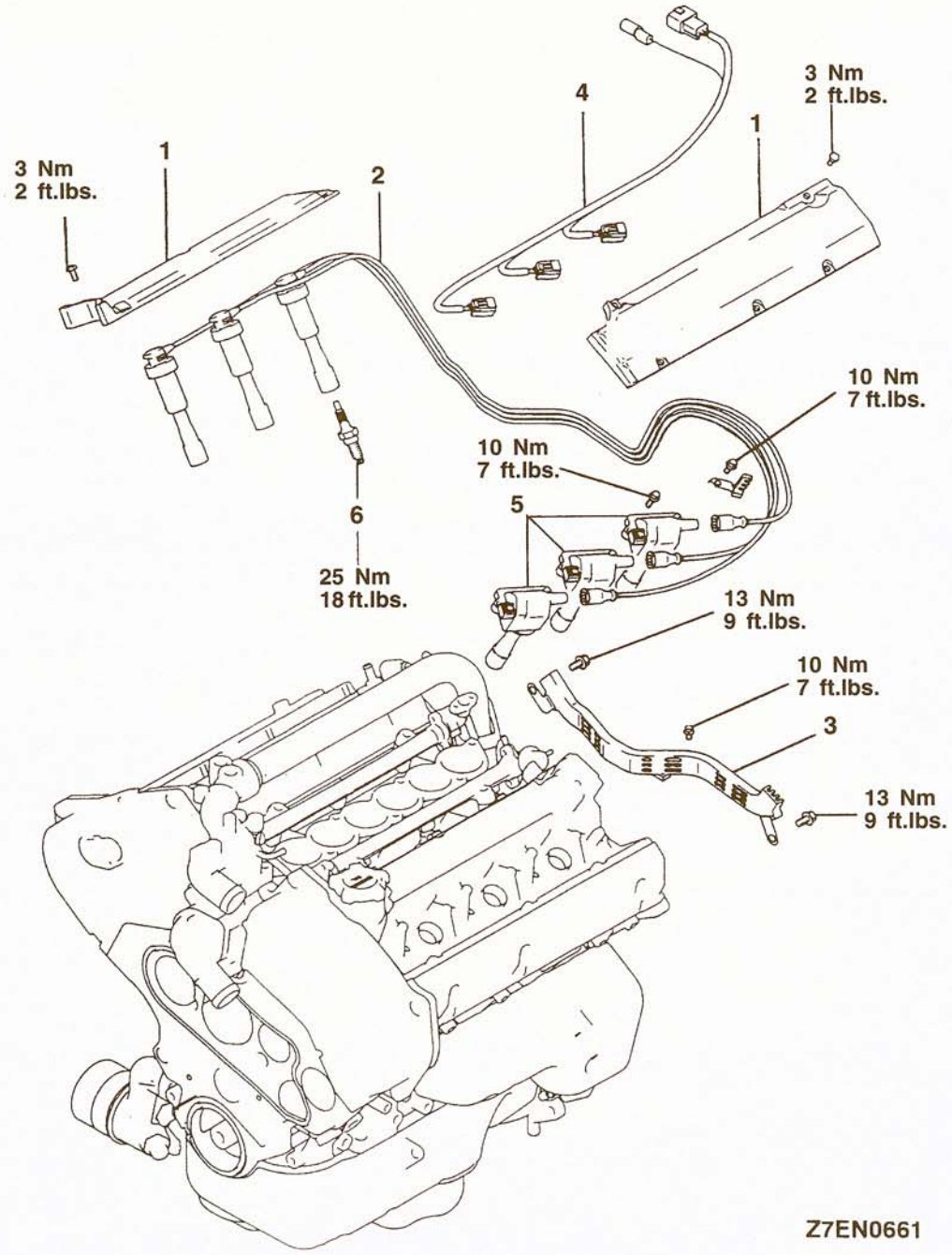


**Removal steps**

1. Center cover
2. Spark plug cables
3. High tension cable support
4. Harness
5. Ignition coil
6. Spark plug

TSB Revision

# TIMING BELT

11300190145

## REMOVAL AND INSTALLATION

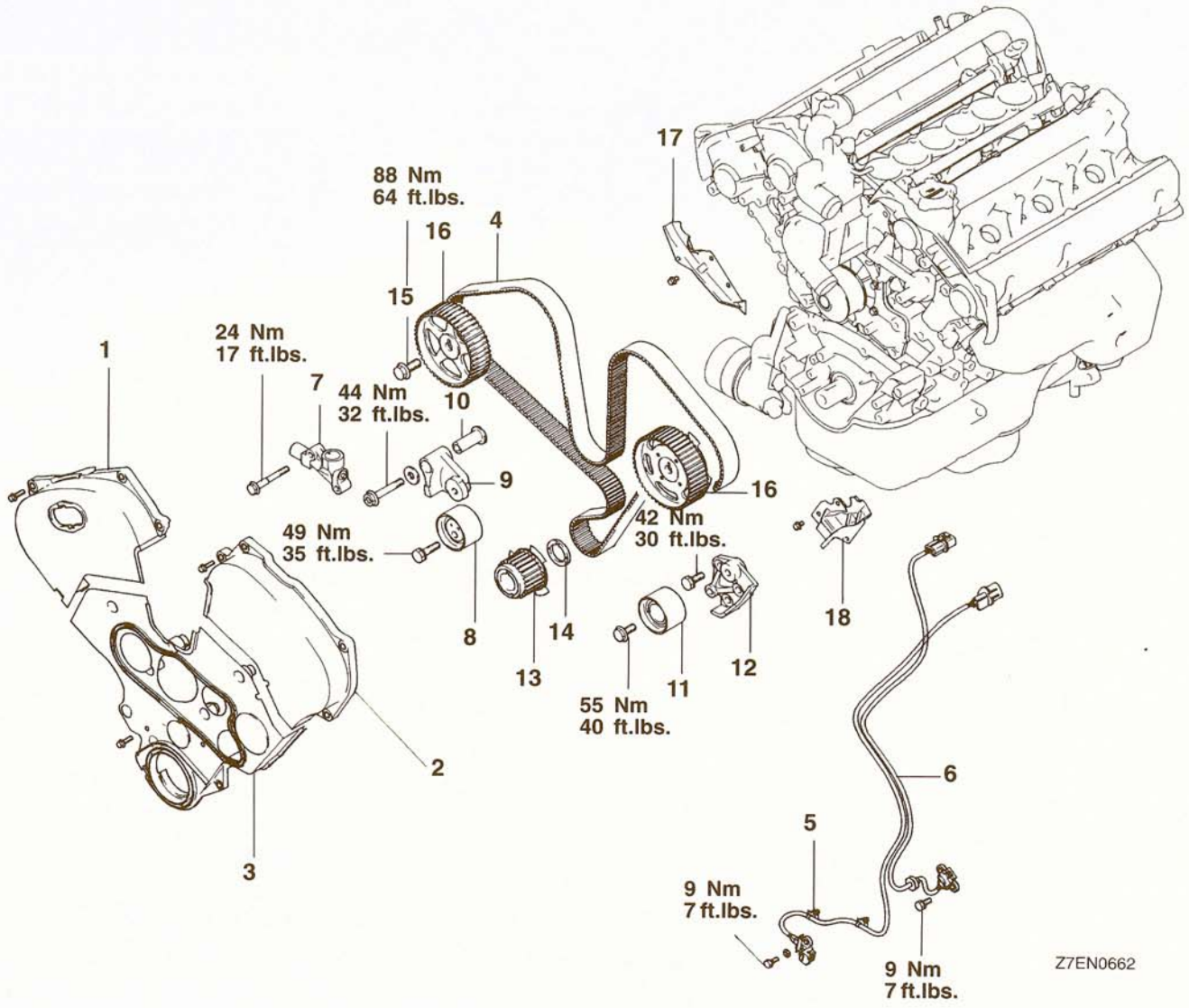


**Removal steps**

1. Timing belt front upper cover, right
2. Timing belt front upper cover, left
3. Timing belt front lower cover
◀A▶ ▶C◀ 4. Timing belt
5. Crankshaft position sensor
6. Camshaft position sensor
▶B◀ 7. Auto tensioner
8. Tensioner pulley
9. Tensioner arm
10. Shaft
11. Idler pulley
12. Idler pulley bracket
13. Crankshaft sprocket assembly
14. Crankshaft spacer
◀B▶ ▶A◀ 15. Camshaft sprocket bolt
16. Camshaft sprocket
17. Timing belt rear cover, right
18. Timing belt rear cover, left

TSB Revision

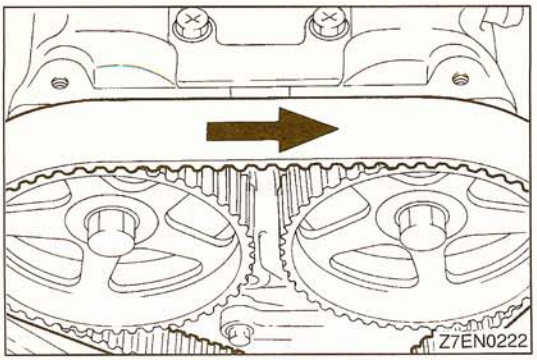


## REMOVAL SERVICE POINTS

### ◀A▶ TIMING BELT REMOVAL

(1) Mark the belt running direction for reference reinstallation.

NOTE
(1) Water or oil on the belt shortens its life drastically, so the removed timing belt, sprocket, and tensioner must be kept free from oil and water. Do not immerse parts in cleaning solvent.
(2) If there is oil or water on any part, check the front case oil seal, camshaft oil seal and water pump for leaks.

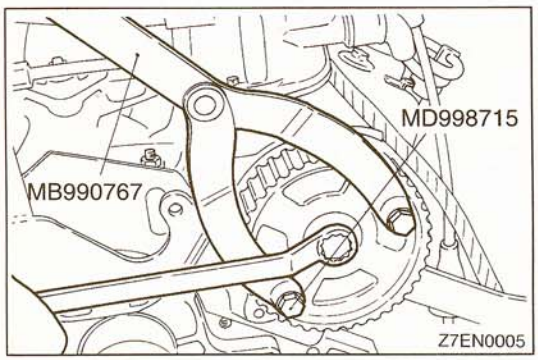


### ◀B▶ CAMSHAFT SPROCKET BOLT LOOSENING

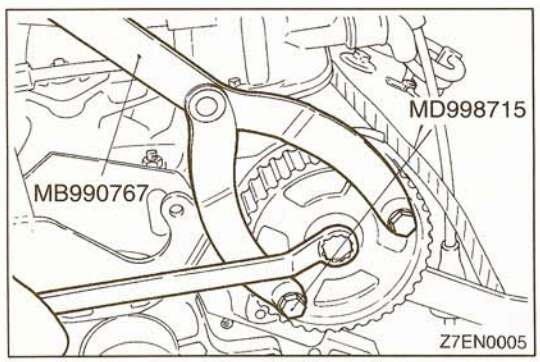


## INSTALLATION SERVICE POINTS

### ▶A◀ CAMSHAFT SPROCKET BOLT TIGHTENING

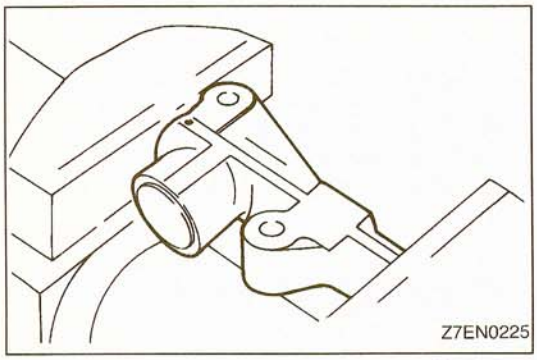


### ▶B◀ AUTO-TENSIONER INSTALLATION

If the auto-tensioner rod is fully extended, set it in the retracted position with the following procedure.
(1) Set the auto-tensioner in a vice.

TSB Revision

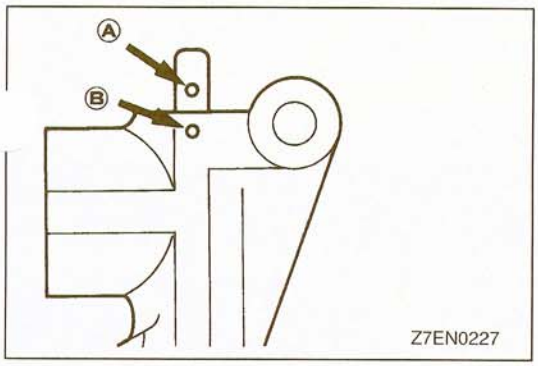


(2) Slowly close the vice to force the rod in until the set hole (A) of the rod is lined up with the set hole (B) of the cylinder.
(3) Insert a wire [1.4 mm (.055 in.) in diameter] into the set holes.
(4) Remove the auto-tensioner from the vice.

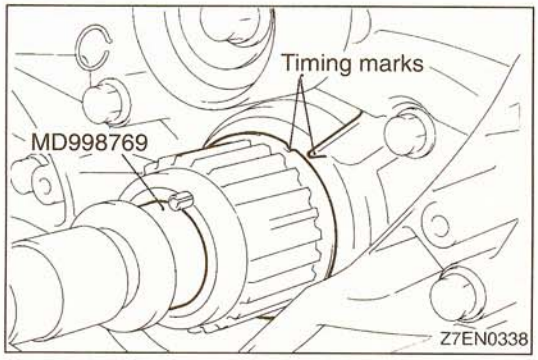


### ▶C◀ TIMING BELT INSTALLATION

(1) Using the special tool, line up the crankshaft sprocket timing marks, and then rotate the sprocket one tooth counterclockwise.

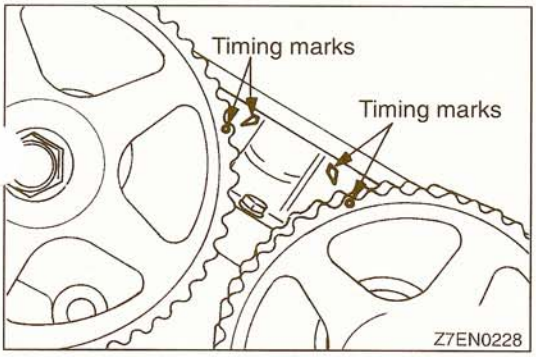


(2) Line up the timing marks of the camshaft sprockets for left bank.

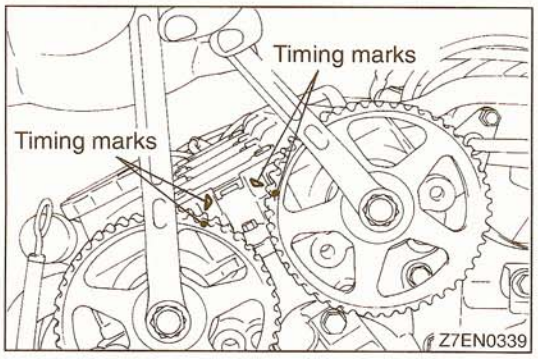


(3) Using two wrenches, line up the timing marks of the camshaft sprockets for right bank.

**Caution**

1. **Since valve spring force can turn the camshaft sprocket, be careful not to catch your finger.**
2. **If either camshaft sprocket is rotated one complete turn clockwise or counterclockwise after lining up the timing marks of the other camshaft sprocket, the intake and exhaust valves might interfere. Consequently, if a camshaft sprocket was turned too far in lining up the timing marks, be sure to rotate it back from that position to line up again the timing marks.**

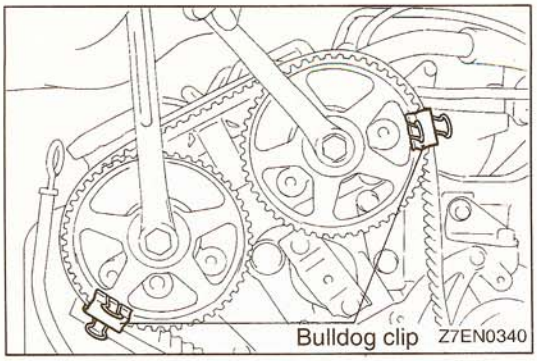


(4) Install the timing belt on the exhaust side camshaft sprocket for right bank and hold it with a bulldog clip at the position shown in the illustration.
(5) Install the timing belt on the intake side camshaft sprocket and hold it with a bulldog clip at the positions shown in the illustration.

**Caution**
**Since the camshaft sprocket turns easily, avoid excessive pulling on the timing belt.**

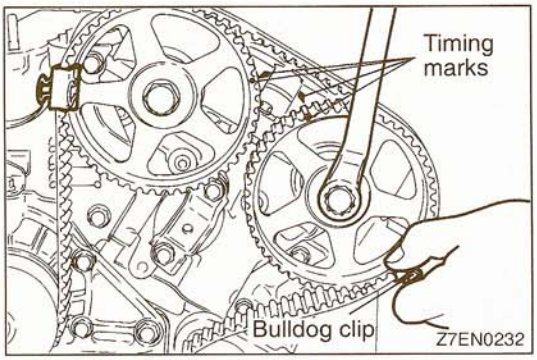


(6) Check that the timing marks of the camshaft sprockets for left bank are in alignment. Then install the timing belt on these sprockets and hold it with a bulldog clip at the positions shown in the illustration.
(7) Install the timing belt on the idler pulley.
(8) Install the timing belt on the crankshaft sprocket.
(9) Install the timing belt on the tensioner pulley.

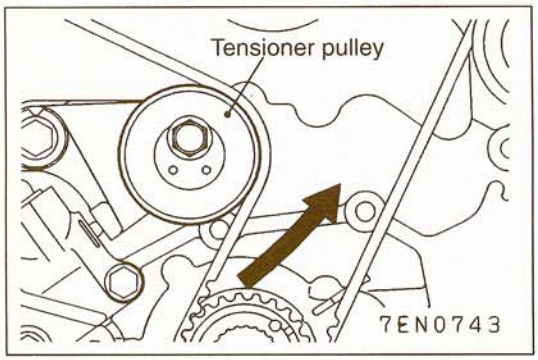


(10) Press the tensioner pulley on the timing belt gently, then tighten the bolt temporarily.
(11) Remove the four bulldog clips.

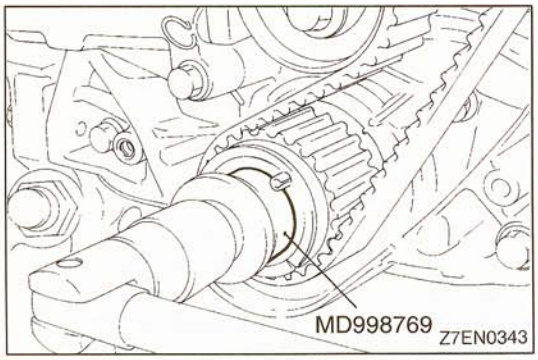


(12) Using the special tool, turn the crankshaft a quarter turn counterclockwise. Then rotate it clockwise to line up the timing marks and check that all the timing marks are in alignment.

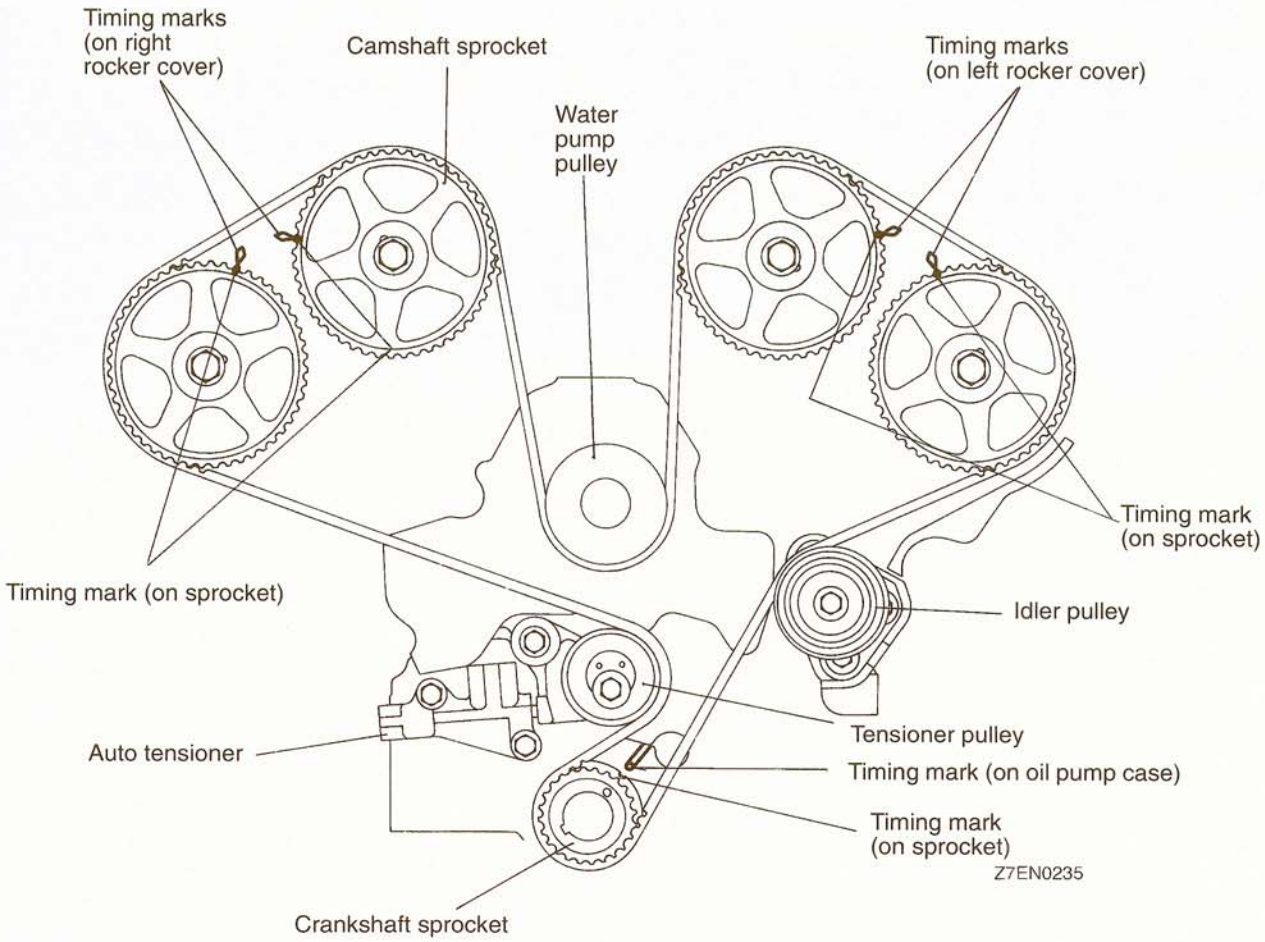


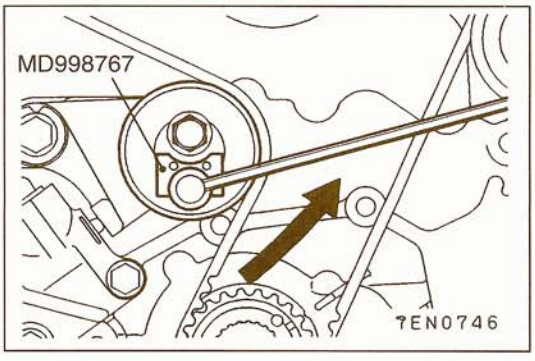


(13) Loosen the center bolt of the auto-tensioner pulley, and install the special tool and a torque wrench on the pulley. While holding the pulley with approximately 9.4 Nm (7 ft.lbs.) torque to prevent it from turning, tighten the center bolt to the specified torque.

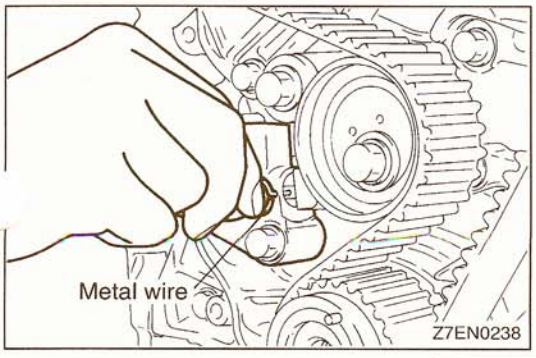


(14) Turn the crankshaft two turns clockwise, and leave it alone for about five minutes. Then move in and out the auto-tensioner setting metal wire to check that the wire moves smoothly.

NOTE
If the metal wire does not move smoothly, repeat step (12) until it does move smoothly.

(15) Remove the auto tensioner setting metal wire.

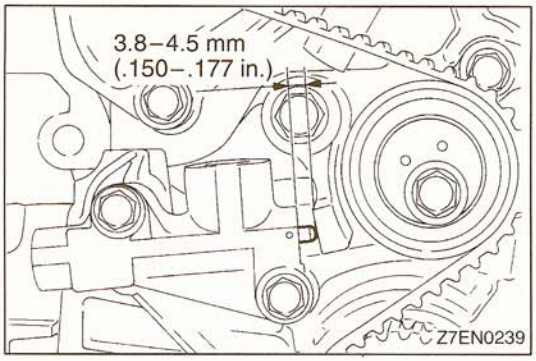


(16) Check that the spacing between the tensioner arm and auto tensioner is within the standard limit.

**Standard value: 3.8–4.5 mm (.150–.177 in.)**

## INSPECTION

11300200138

### TIMING BELT

Replace belt if any of the following conditions exist.

(1) Hardening of back rubber–back side is glossy without resilience and leaves no indent when pressed with fingernail.

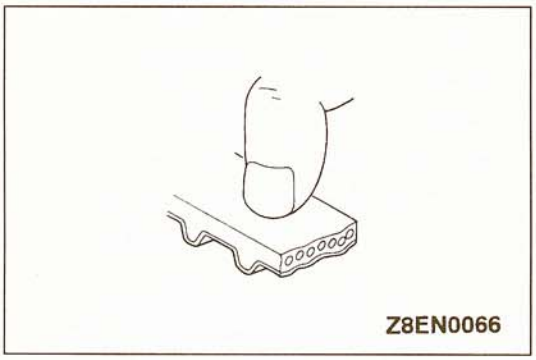


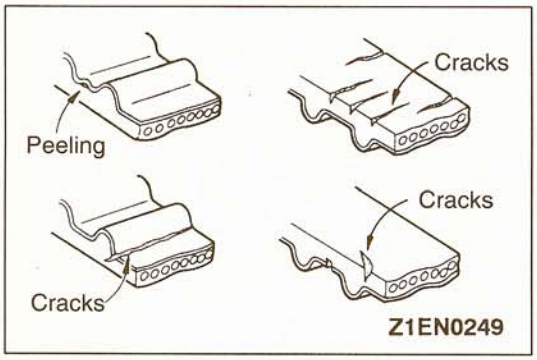


(2) Cracks on rubber back
(3) Cracks or peeling of canvas
(4) Cracks on tooth bottom
(5) Cracks on belt

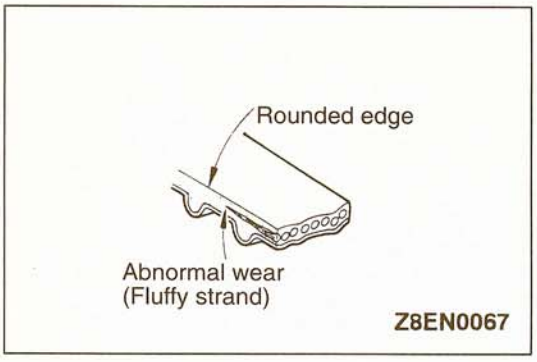


(6) Abnormal wear of belt sides. The sides are normal if they are sharp as if cut by a knife.

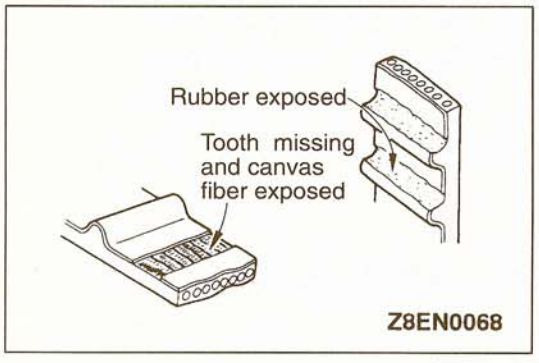


(7) Abnormal wear on teeth
(8) Tooth missing and canvas fiber exposed.

TSB Revision

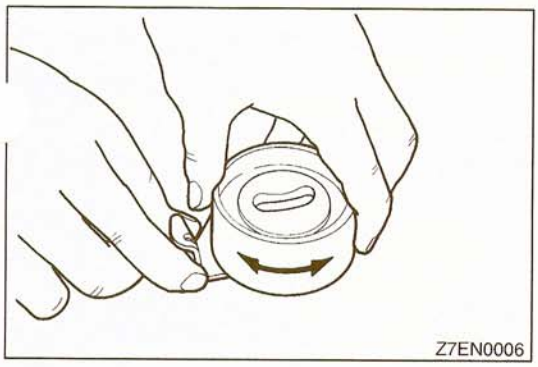


## TENSIONER

(1) Turn the pulley. If it rotates unsmoothly, develops noise or excessive play, replace the timing belt tensioner.

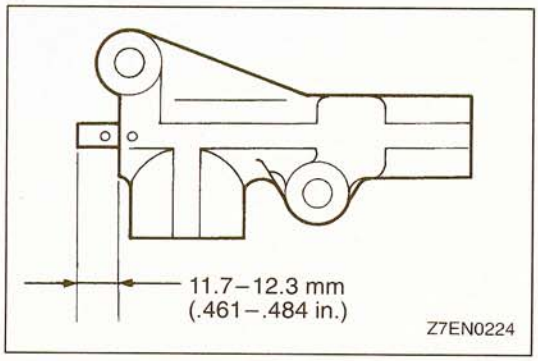


## AUTO-TENSIONER

(1) Check for oil leaks. If oil leaks are evident, replace the auto-tensioner.
(2) Check the rod end for wear or damage and replace the auto-tensioner if necessary.
(3) Measure the rod projection length. If the reading is outside the standard value, replace the auto-tensioner.

**Standard value: 11.7–12.3 mm (.461–.484 in.)**

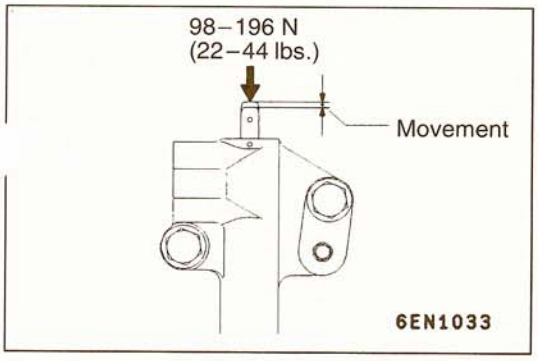


(4) Press the rod with a force of 98 to 196 N (22 to 44 lbs.) and measure the movement of rod.
If the measured value is out of the standard value, replace the auto-tensioner.

**Standard value: 1 mm (.0393 in.) or less**

# INTAKE MANIFOLD AND FUEL PARTS

11300430063

## REMOVAL AND INSTALLATION

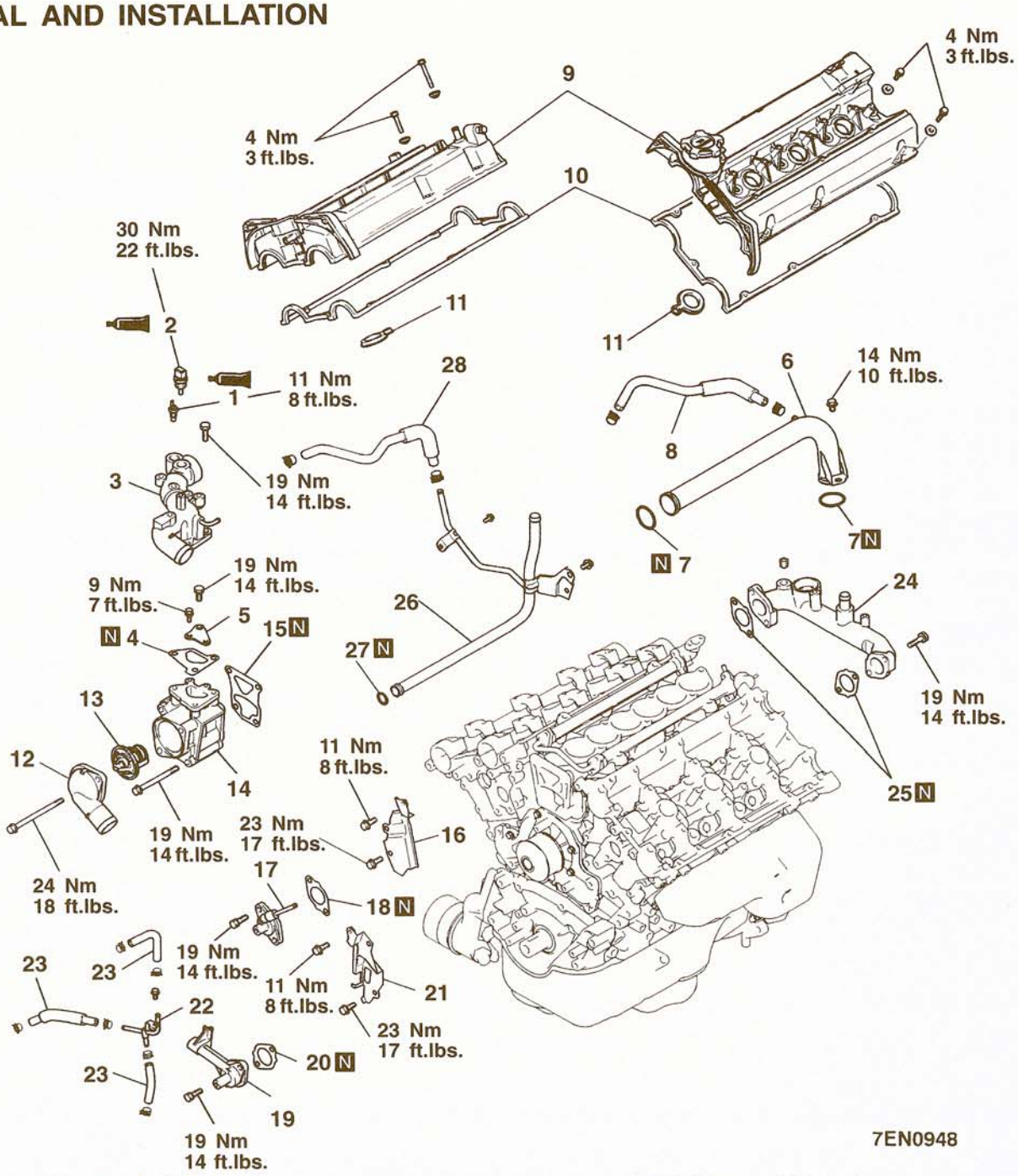


**Removal steps**

- ▶G◀ 1. Engine coolant temperature gauge unit
- ▶F◀ 2. Engine coolant temperature sensor
- 3. Water outlet fitting
- 4. Gasket
- 5. Thermostat case bracket
- ▶D◀ 6. Water outlet pipe
- ▶D◀ 7. O-ring
- 8. Water hose
- 9. Rocker cover
- 10. Rocker cover gasket, A
- 11. Rocker cover gasket, B
- 12. Water inlet fitting
- ▶E◀ 13. Thermostat
- 14. Thermostat case
- 15. Gasket
- 16. Timing belt rear center cover, right
- 17. Fitting, right
- 18. Gasket
- 19. Fitting, left
- 20. Gasket
- 21. Timing belt rear center cover, left
- 22. Fitting
- 23. Water hose
- 24. Water passage
- 25. Gasket
- ▶D◀ 26. Water pipe
- ▶D◀ 27. O-ring
- 28. Water hose

**TSB Revision**

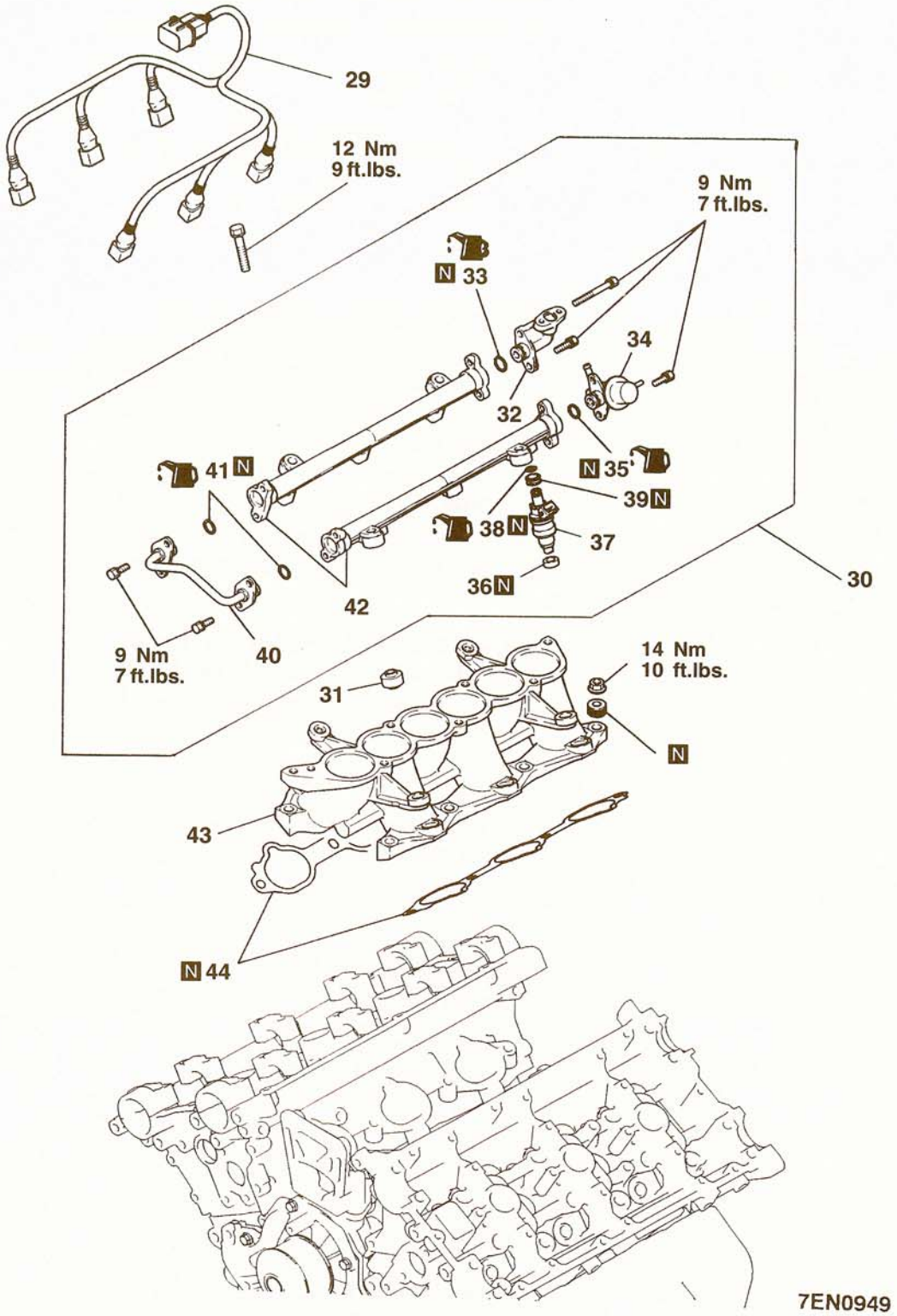


**Removal steps**

29. Injector harness
30. Injector and fuel rail
31. Insulator
▶C◀ 32. Fuel inlet fitting
33. O-ring
▶C◀ 34. Fuel pressure regulator
35. O-ring
36. Insulator
▶B◀ 37. Injector
38. O-ring
39. Gromet
40. Fuel pipe
41. O-ring
42. Fuel rail
▶A◀ 43. Intake manifold
44. Intake manifold gasket

**TSB Revision**

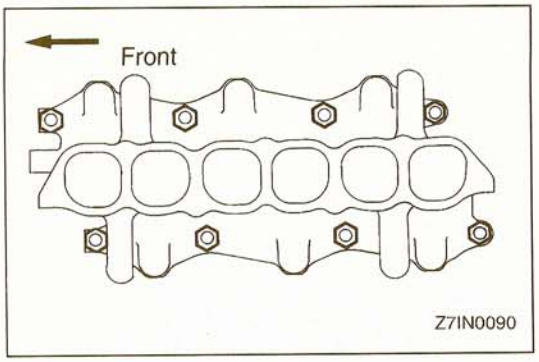


## INSTALLATION SERVICE POINTS

### ▶A◀ INTAKE MANIFOLD INSTALLATION

(1) Tighten the nuts on the right bank to 5 – 8 Nm ( – 5.9 ft.lbs.).
(2) Tighten the nuts on the left bank to the specified torque. Then tighten the nuts on right bank to the specified torque.
(3) Tighten the nuts on the left bank and those on the right bank again in that order.

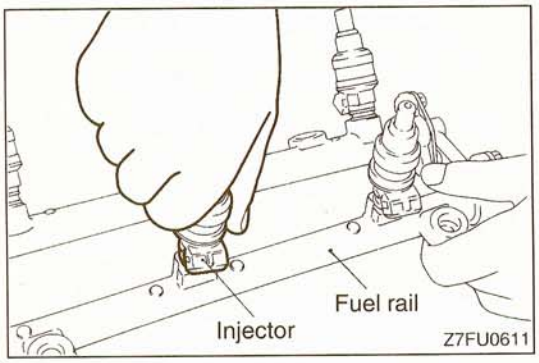


### ▶B◀ INJECTOR INSTALLATION

(1) Before installing the injector, the rubber O-ring must be lubricated with a drop of new engine oil for easy installation.

**Caution**
**Use care not to let the engine oil enter the delivery pipe.**

(2) Insert the injector top end into the fuel rail. Be careful not to damage O-ring during installation.

### ▶C◀ FUEL PRESSURE REGULATOR AND FUEL INLET FITTING INSTALLATION

(1) Before installing the pressure regulator, the O-ring must be lubricated with a drop of new engine oil for easy installation.

**Caution**
**Use care not to let the engine oil enter the delivery pipe.**

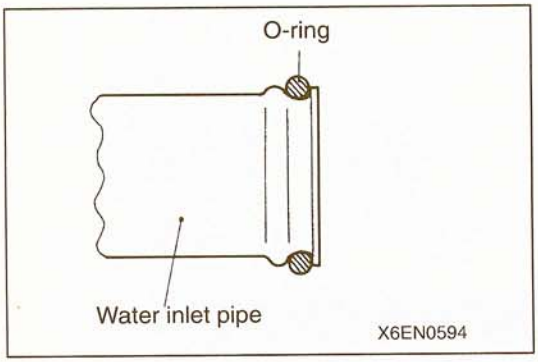


### ▶D◀ O-RING AND WATER PIPE INSTALLATION

(1) Wet the O-ring (with water) to facilitate assembly.

**Caution**
**Keep the O-ring free of oil or grease.**

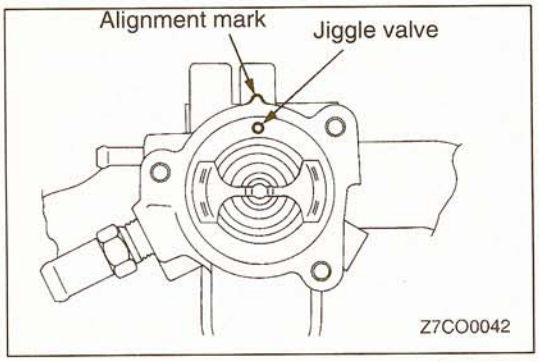


### ▶E◀ THERMOSTAT INSTALLATION

(1) Install the thermostat and line up the jiggle valve with the alignment mark on the thermostat housing.

TSB Revision

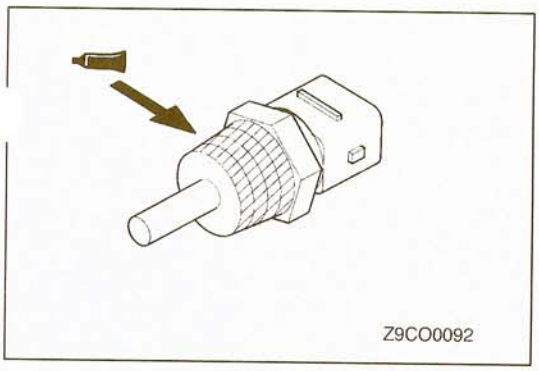


▶F◀ SEALANT APPLICATION TO ENGINE COOLANT TEMPERATURE SENSOR

Specified sealant:
3M Nut Locking No. 4171 or equivalent

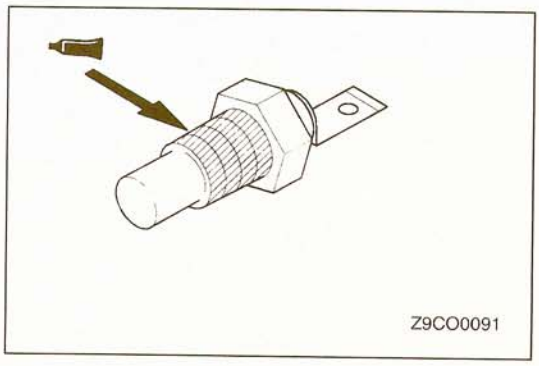


▶G◀ SEALANT APPLICATION TO ENGINE COOLANT TEMPERATURE GAUGE UNIT

Specified sealant: 3M Part No. 8660 or equivalent

# EXHAUST MANIFOLD

11300490085

## REMOVAL AND INSTALLATION

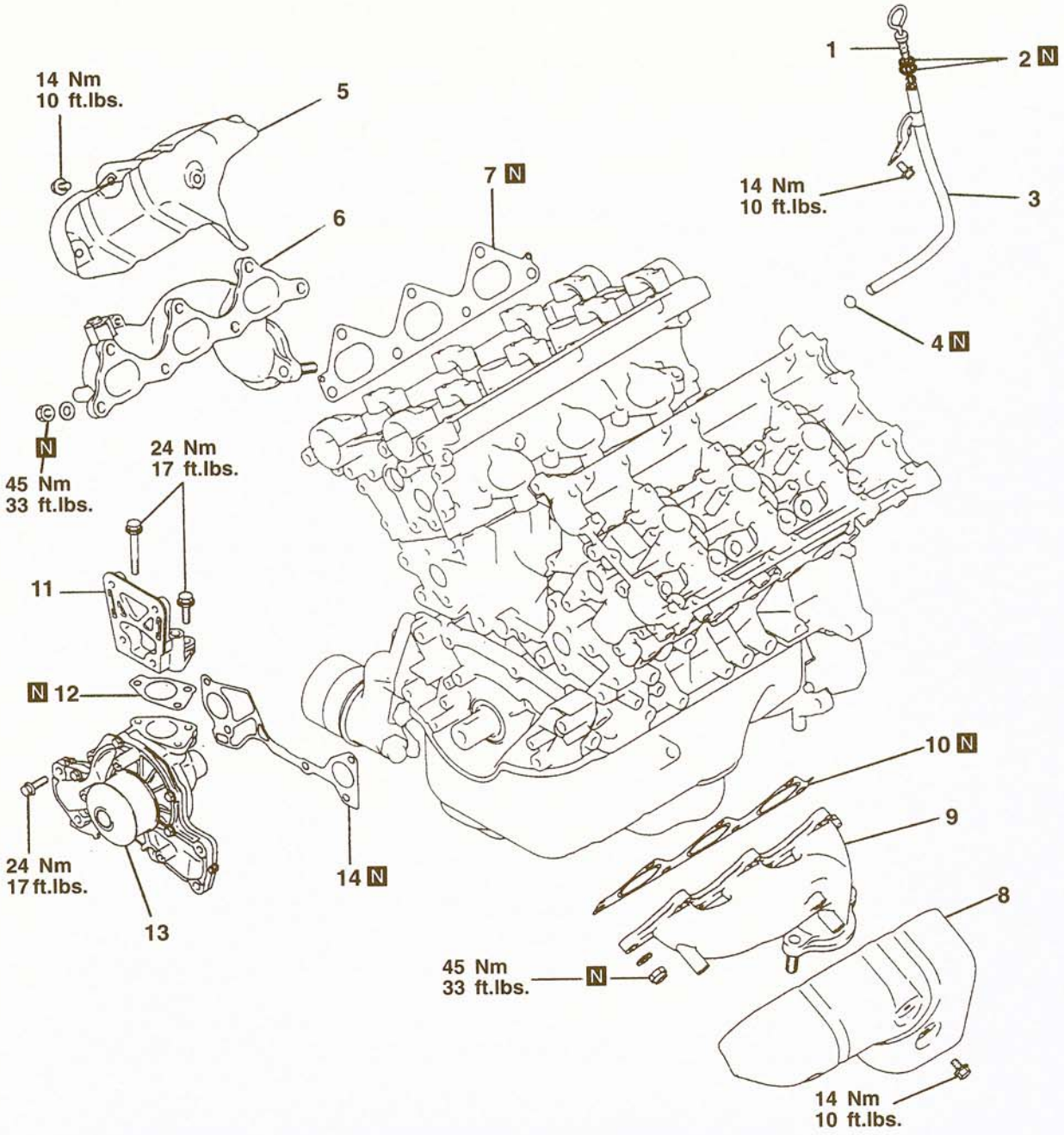


7EN0818

**Removal steps**

1. Oil level gauge
2. O-ring
3. Oil level gauge guide
4. O-ring
5. Heat protector, right
6. Exhaust manifold, right
7. Exhaust manifold gasket, right
8. Heat protector, left
9. Exhaust manifold, left
10. Exhaust manifold gasket, left
11. Water pump fitting
12. Gasket
13. Water pump
14. Gasket

TSB Revision

# ROCKER ARMS AND CAMSHAFT

11300540148

## REMOVAL AND INSTALLATION

Lubricate all internal parts with engine oil during reassembly.

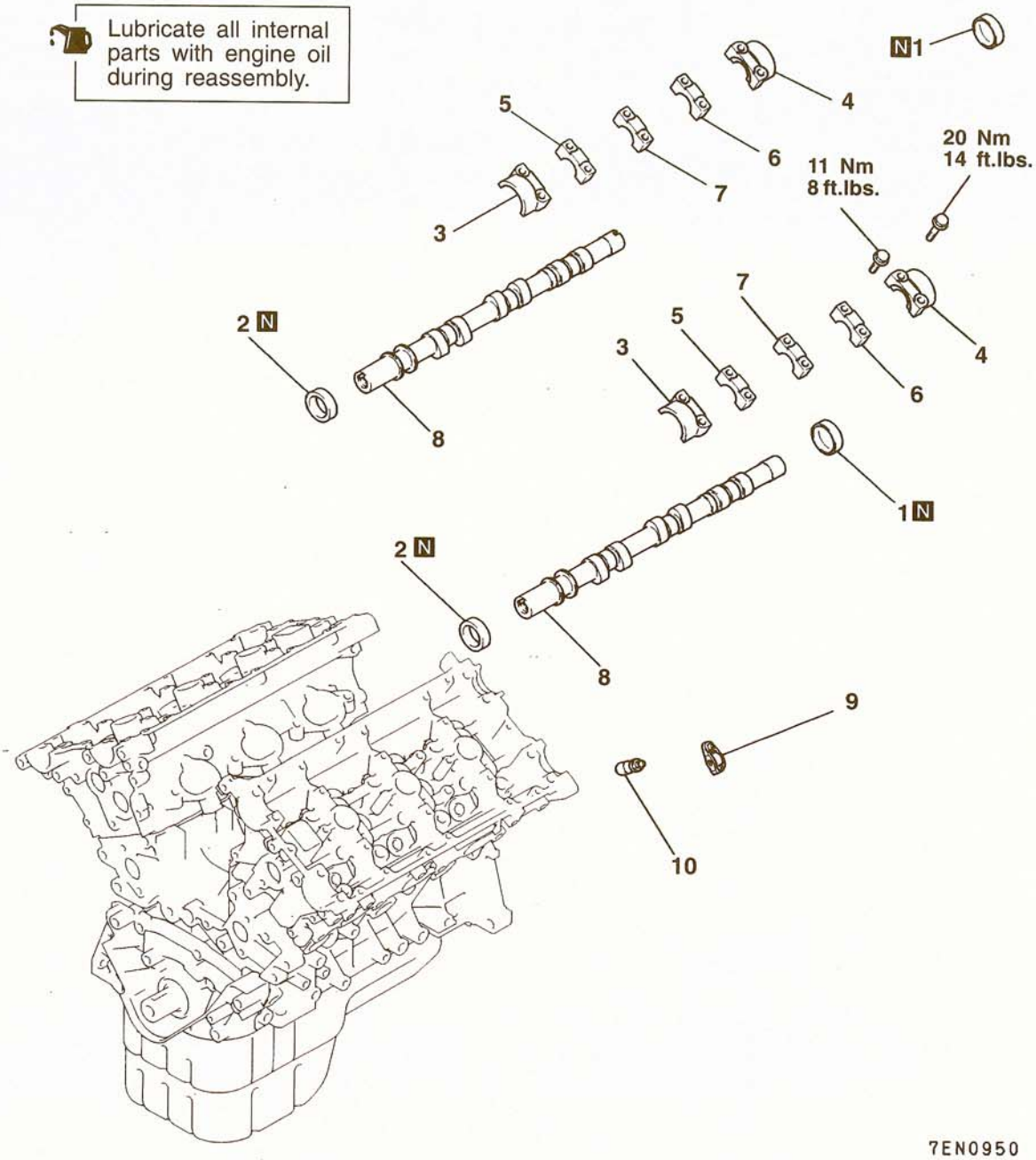


**Removal steps**

- ▶D◀ 1. Circular packing
- ▶C◀ 2. Camshaft oil seal
- ▶B◀ 3. Bearing cap, front
- ▶B◀ 4. Bearing cap, rear
- ▶B◀ 5. Bearing cap, No. 2
- ▶B◀ 6. Bearing cap, No. 4
- ▶B◀ 7. Bearing cap, No. 3
- ▶A◀ 8. Camshaft
- 9. Rocker arm
- 10. Lash adjuster

TSB Revision

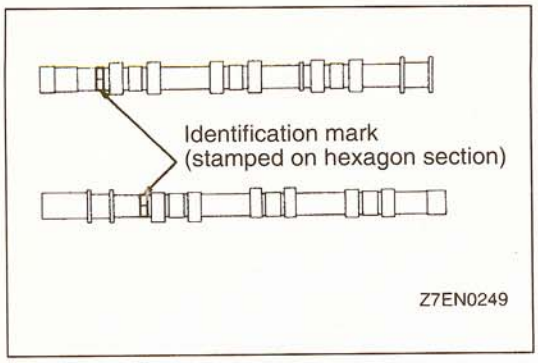


## INSTALLATION SERVICE POINTS

### ▶A◀ CAMSHAFT INSTALLATION

(1) Turn the crankshaft to bring No.1 cylinder to the top dea center.
(2) Check that the rocker arm is installed correctly on the lash adjuster and valve.
(3) Install the camshaft while noting the identification mark (stamped on the hexagon section).

**Identification mark:**
**<Intake> P**
**<Exhaust> K**

(4) Install the camshafts with their dowel pins positioned as shown in the illustration.

**Right bank**

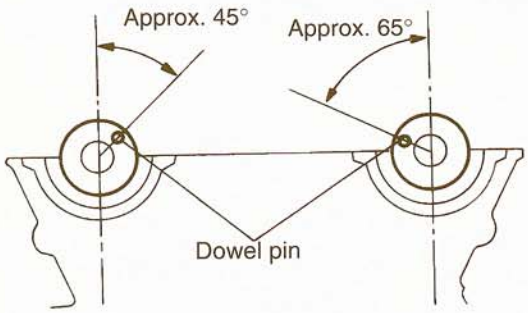


**Left bank**

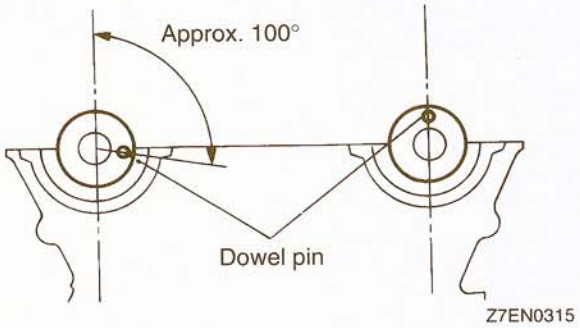


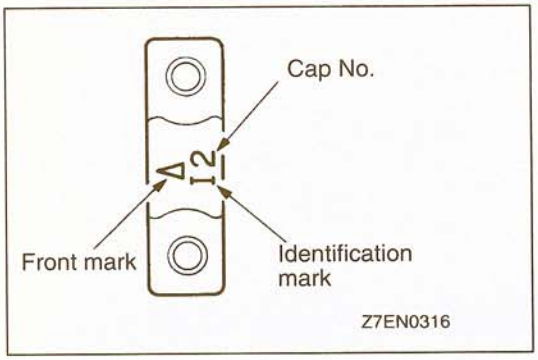


### ▶B◀ BEARING CAP INSTALLATION

(1) Install the bearing caps according to the identification mark and cap number. No.2, 3 and 4 bearing caps bear the front mark. Install these caps with the front mark directed in the same direction as that on the cylinder head.

**Identification mark:**
**<Intake> I**
**<Exhaust> E**

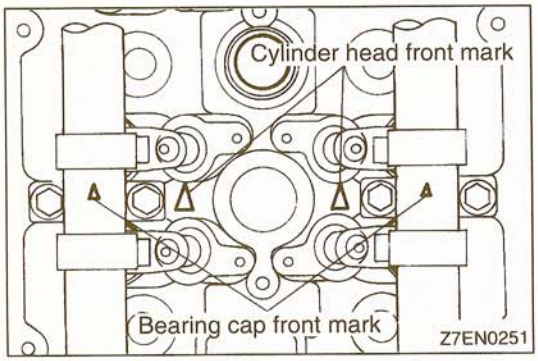


(2) Gradually tighten the bearing caps in two or three steps. In the final step, tighten to the specified torque.

**TSB Revision**

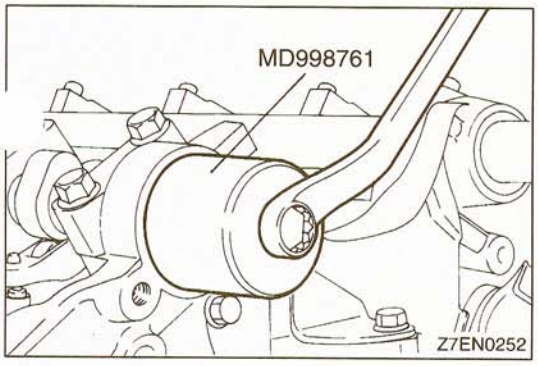


### ▶C◀ CAMSHAFT OIL SEAL INSTALLATION

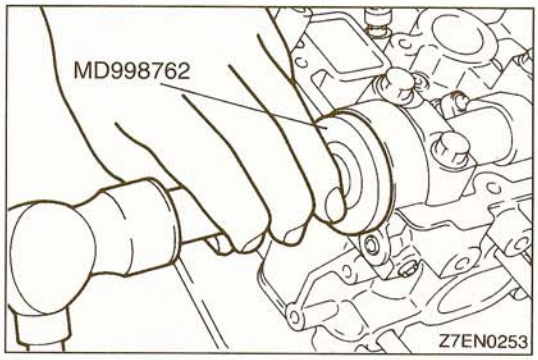


### ▶D◀ CIRCULAR PACKING INSTALLATION

(1) Install the circular packing with the special tool.

## INSPECTION

11300550134

### ROCKER ARM

(1) Check the roller surface and replace the rocker arm if recesses, damage or heat seizure is observed.
(2) Check roller rotation and replace the rocker arm if uneven rotation or roller backlash is observed.
(3) Check the inside diameter and replace the rocker arm if damage or seizure is observed.

### CAMSHAFT

(1) Inspect the camshaft bearing journals for damage and binding. If the journals are binding, also check the cylinder head for damage. Also check the cylinder head oil holes for clogging.
(2) Check the tooth surface of the distributor drive gear teeth of the camshaft and replace if abnormal wear is evident.
(3) Check the cam surface for abnormal wear and damage and replace if defective. Also measure the cam height and replace if out of limit.

| Identification mark | | Standard value | Limit |
|---|---|---|---|
| Intake mm (in.) | P | 35.20 (1.39) | 34.70 (1.37) |
| Exhaust mm (in.) | K | 34.91 (1.37) | 34.41 (1.37) |

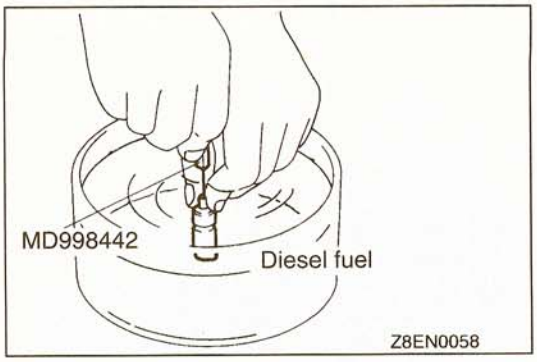


## LASH ADJUSTER LEAK DOWN TEST

**Caution**

1. **The lash adjuster is a precision part. Keep it fr from dust and other foreign matters.**
2. **Do not disassemble the lash adjusters.**
3. **When cleaning the lash adjusters, use clean diesel fuel only.**

(1) Immerse the lash adjuster in clean diesel fuel.
(2) While lightly pushing down the inner steel ball using the special tool, move the plunger up and down four or five times to bleed air.
Use of the Retainer facilitates the air bleeding of the rocker arm mounted type lash adjuster.
(3) Remove the special tool and press the plunger. If the plunger is hard to be pushed in, the lash adjuster is normal. If the plunger can be pushed in all the way readily, bleed the lash adjuster again and test again. If the plunger is still loose, replace the lash adjuster.

**Caution**
**Upon completion of air bleeding, hold the lash adjuster upright to prevents the inside diesel fuel from spilling.**

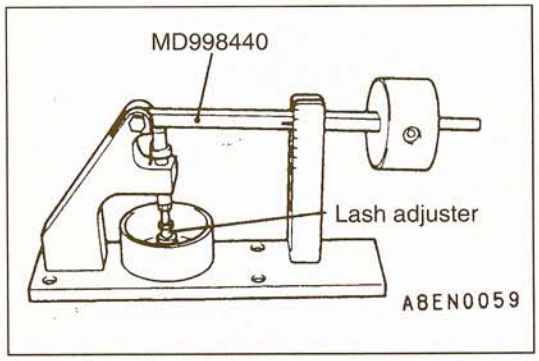


(4) After air bleeding, set the lash adjuster on the special tool (Leak down tester MD998440).
(5) After the plunger has gone down somewhat 0.2–0.5 mm (.008–.020 in.), measure the time taken for it to go down 1 mm (.04 in.). Replace if the measured time is out specification.

**Standard value:**
**4–20 seconds / 1 mm (.04 in.)**
**[Diesel fuel at 15–20°C (50–68°F)]**

# CYLINDER HEAD AND VALVE

11300690140

## REMOVAL AND INSTALLATION

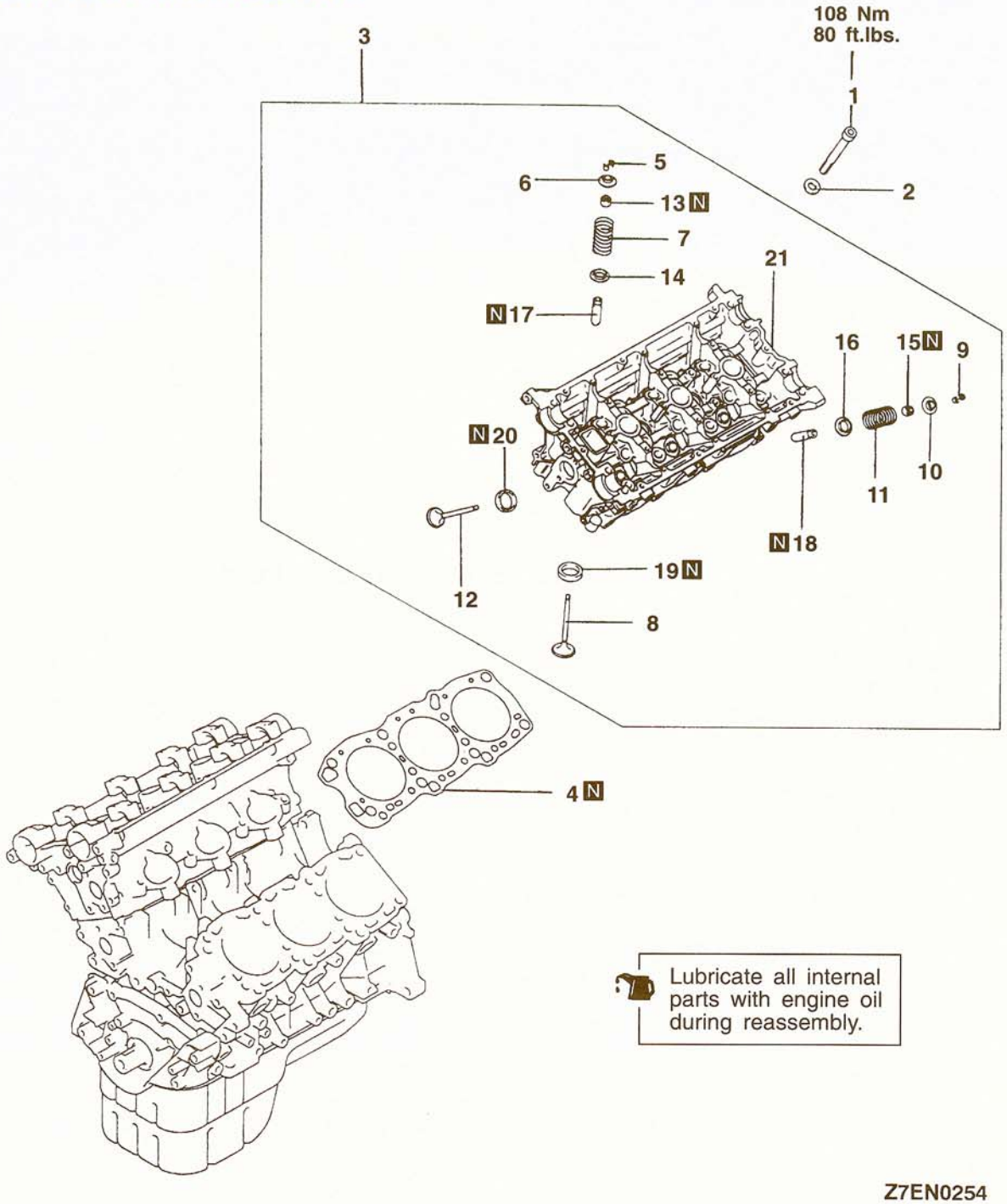


Z7EN0254

**Removal steps**

◀A▶ ▶E◀ 1. Cylinder head bolt
2. Washer
3. Cylinder head assembly
▶D◀ 4. Cylinder head gasket
◀B▶ ▶C◀ 5. Retainer lock
6. Valve spring retainer
▶B◀ 7. Valve spring
8. Inlet valve
◀B▶ ▶C◀ 9. Retainer lock
10. Valve spring retainer
▶B◀ 11. Valve spring
12. Exhaust valve
◀C▶ ▶A◀ 13. Valve stem seal
14. Valve spring seat
◀C▶ ▶A◀ 15. Valve stem seal
16. Valve spring seat
17. Inlet valve guide
18. Exhaust valve guide
19. Inlet valve seat
20. Exhaust valve seat
21. Cylinder head

**TSB Revision**

## REMOVAL SERVICE POINTS

### PRECAUTION FOR REMOVED PARTS

(1) Keep removed parts in order according to the cylinde number and intake/exhaust.

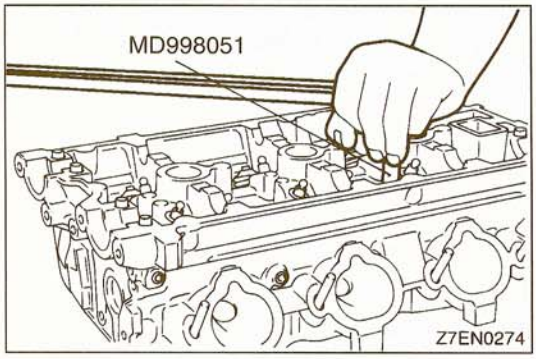


### ◀A▶ CYLINDER HEAD BOLT REMOVAL

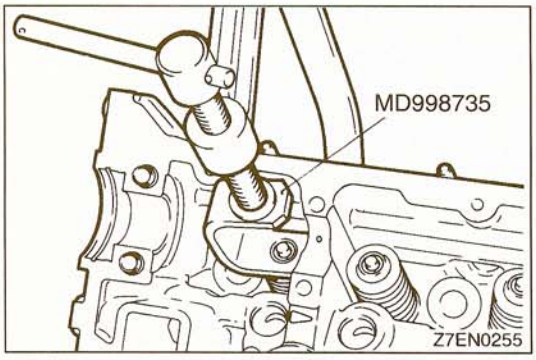


### ◀B▶ RETAINER LOCK REMOVAL

(1) Using the special tool, compress the spring.
(2) Remove the retainer locks.

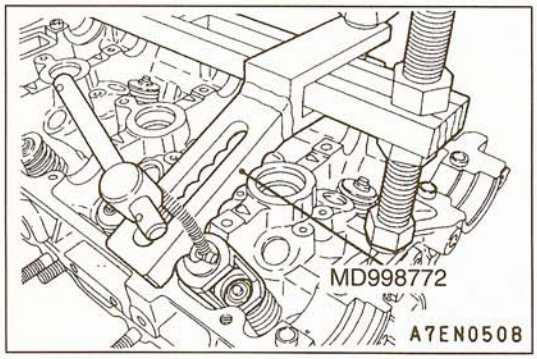


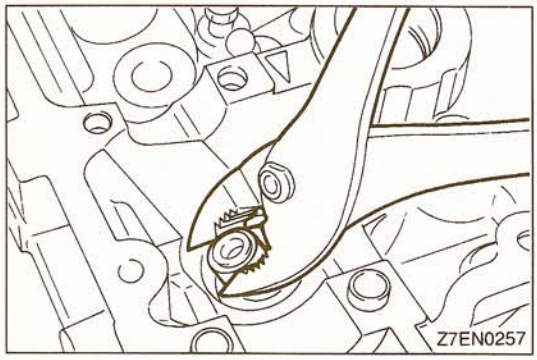


### ◀C▶ VALVE STEM SEAL REMOVAL

(1) Do not reuse removed valve stem seals.

TSB Revision

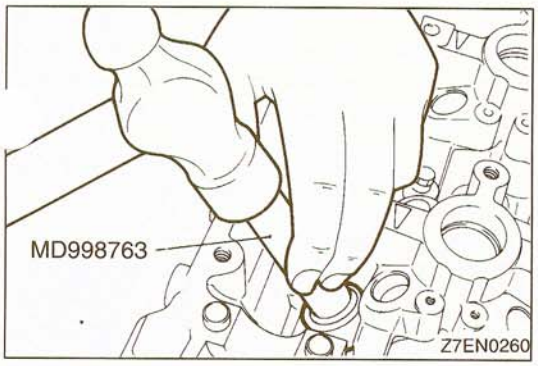


## INSTALLATION SERVICE POINTS

### ▶A◀ VALVE STEM SEAL INSTALLATION

(1) Install the valve spring seat.
(2) Using the special tool, install a new stem seal to the valve guide.

**Caution**
**1. Do not reuse removed valve stem seals.**
**2. Always use the special tool to install the valve stem seal. Improperly installed valve stem seal may cause oil down.**

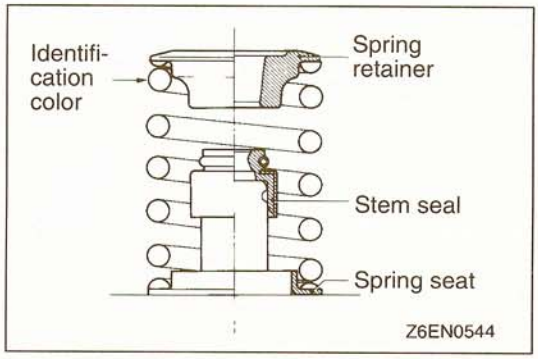


### ▶B◀ VALVE SPRING INSTALLATION

(1) Direct the valve spring end with identification color toward the spring retainer.

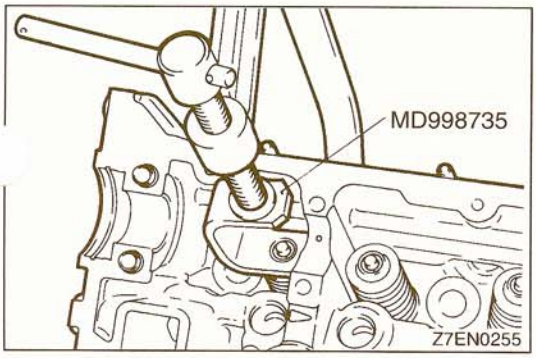


### ▶C◀ RETAINER LOCK INSTALLATION

(1) Using the special tool, compress the valve spring and insert the retainer lock into position.

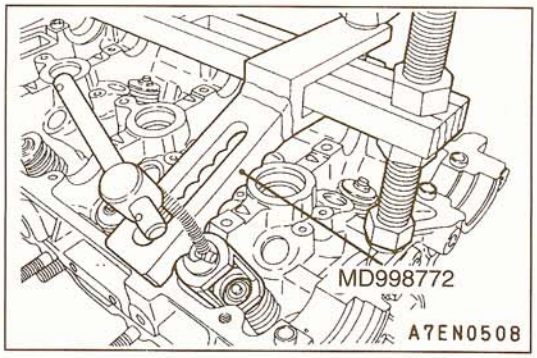


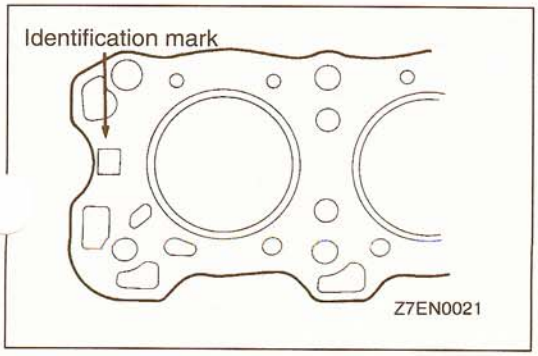


### ▶D◀ CYLINDER HEAD GASKET IDENTIFICATION

**Caution**
**Do not apply sealant to the cylinder head gasket.**

**Identification mark: T136**

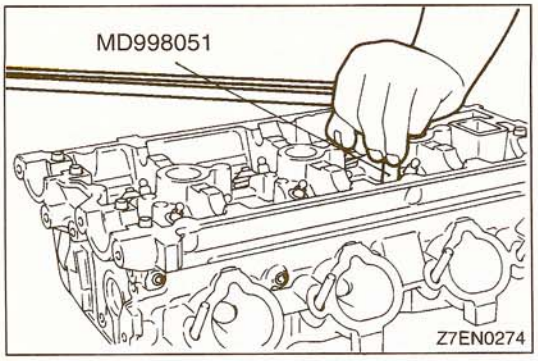


### ▶E◀ CYLINDER HEAD BOLT INSTALLATION

(1) Tighten the cylinder head bolts in the sequence shown. Each bolt should be tightened in two to three steps torquing progressively. Tighten to the specified torque in the final sequence.

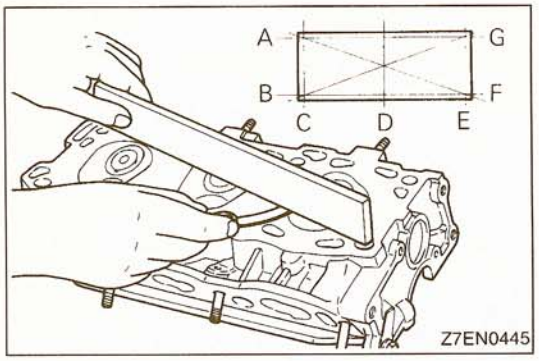


## INSPECTION

11300700157

### CYLINDER HEAD

(1) Check the cylinder head gasket surface for flatness by using a straightedge in the directions of A through G shown in the illustration.

**Standard value**
**0.03 mm (.0012 in.)**

**Limit: 0.2 mm (.008 in.)**

(2) If the service limit is exceeded, correct to meet the specification.

**Grinding limit: *0.2 mm (.008 in.)**

* Total resurfacing depth of both cylinder head and cylinder block.

**Overall height: 132 mm (5.20 in.)**

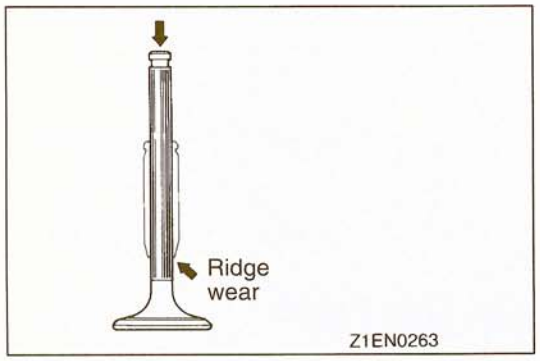


### VALVE

(1) If the valve stem is worn (ridge wear) or otherwise damaged, replace. Also replace the valve if the stem end (that contacts the rocker arm adjusting screw) has a dent.

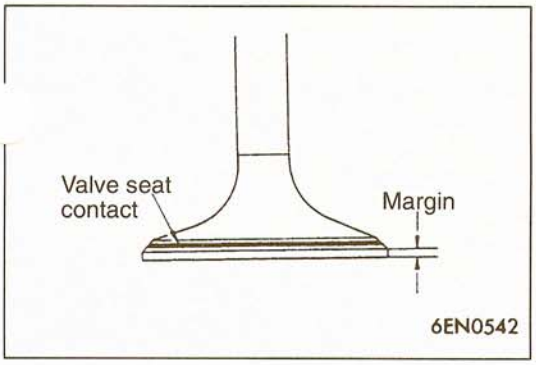


(2) Check the valve face for correct contact. If incorrect, reface using a valve refacer. Valve should make a uniform contact with the seat at the center of valve face.
(3) If the margin exceeds the service limit, replace the valve.

**Standard value:**

**<Intake>**
**1.0 mm (.039 in.)**

**<Exhaust>**
**1.5 mm (.059 in.)**

**Limit:**

**<Intake>**
**0.5 mm (.019 in.)**

**<Exhaust>**
**1.0 mm (.039 in.)**

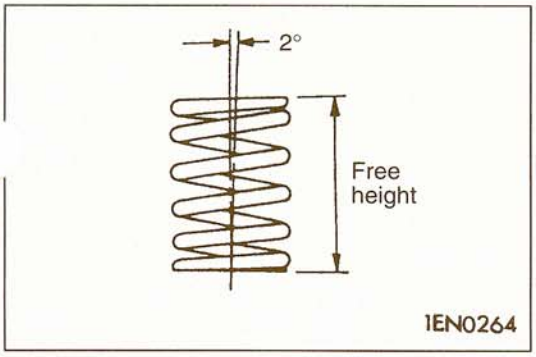


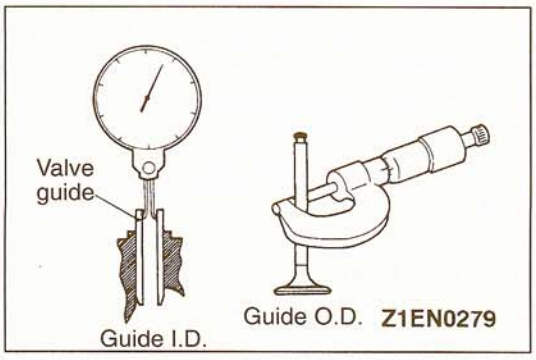


## VALVE SPRINGS

(1) Measure the free height of the spring and, if it is smaller than the limit, replace.

**Standard value:**
**46.4 mm (1.83 in.)**

**Limit:**
**45.4 mm (1.79 in.)**

(2) Measure the squareness of the spring and, if the limit is exceeded, replace.

**Standard value: 2°**

**Limit: Max. 4°**

## VALVE GUIDES

(1) Measure the clearance between the valve guide and valve stem. If the limit is exceeded, replace the valve guide or valve, or both.

**Standard value:**

**<Intake>**
**0.02–0.05 mm (.0008–.0020 in.)**

**<Exhaust>**
**0.05–0.09 mm (.0020–.0035 in.)**

**Limit**

**<Intake>**
**0.10 mm (.004 in.)**

**<Exhaust>**
**0.15 mm (.006 in.)**

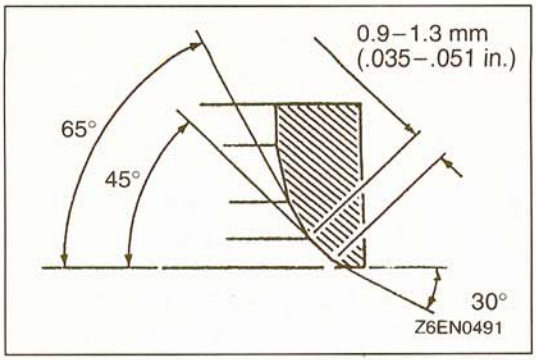


## VALVE SEAT RECONDITIONING PROCEDURE

(1) Before correcting the valve seat, check for clearance between the valve guide and valve and, if necessa replace the valve guide.
(2) Using the special tool or seat grinder, correct to obtain the specified seat width and angle.
(3) After correction, valve and valve seat should be lapped with a lapping compound.

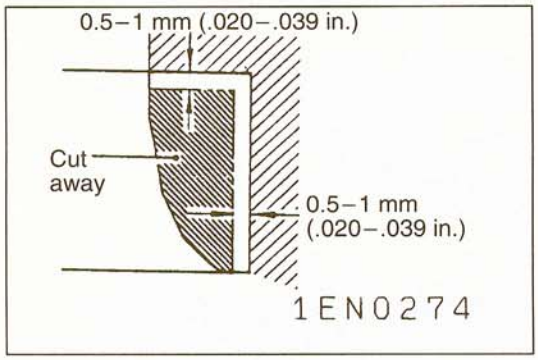


## VALVE SEAT REPLACEMENT PROCEDURE

(1) Cut the valve seat to be replaced from the inside to thin the wall thickness. Then, remove the valve seat.

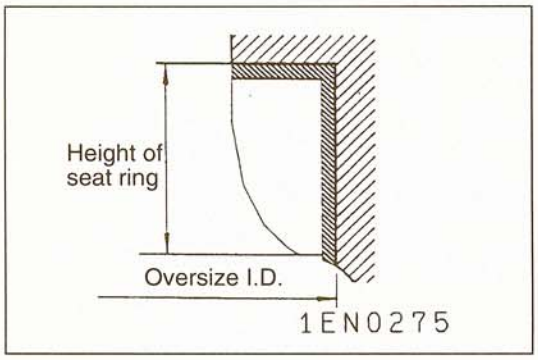


(2) Rebore the valve seat hole in the cylinder head to a selected oversize valve seat diameter.

**Seat ring hole diameter:**
**See "Rework Dimensions" on page 11D-5.**

(3) Before fitting the valve seat, either heat the cylinder head up to approximately 250°C (482°F) or cool the valve seat in liquid nitrogen, to prevent the cylinder head bore from galling.
(4) Using a valve seat cutter, correct the valve seat to the specified width and angle.
See "VALVE SEAT RECONDITIONING PROCEDURE".

## VALVE GUIDE REPLACEMENT PROCEDURE

(1) Using the press, remove the valve guide toward the cylinder block.
(2) Rebore the valve guide hole of the cylinder head so that it may fit to the press-fitted oversize valve guide.

**Caution**
**Do not install a valve guide of the same size again.**

**Valve guide hole diameter:**
**See "Rework Dimensions" on page 11D-5.**

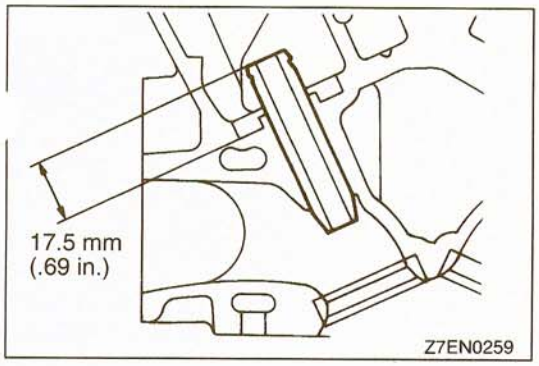


(3) Press-fit the valve guide until it protrude 17.5 mm (.69 in.) from the cylinder head top surface as shown in the illustration.

NOTE
1. When press-fitting the valve guide, work from the cylinder head top surface.
2. Pay attention to the difference in length of the valve guides. [intake side: 45.5 mm (1.79 in.); exhaust side: 50.5 mm (1.99 in.)]
3. After installing the valve guides, insert new valves in them to check for sliding condition.

# OIL PAN AND OIL PUMP

11300810065

## REMOVAL AND INSTALLATION

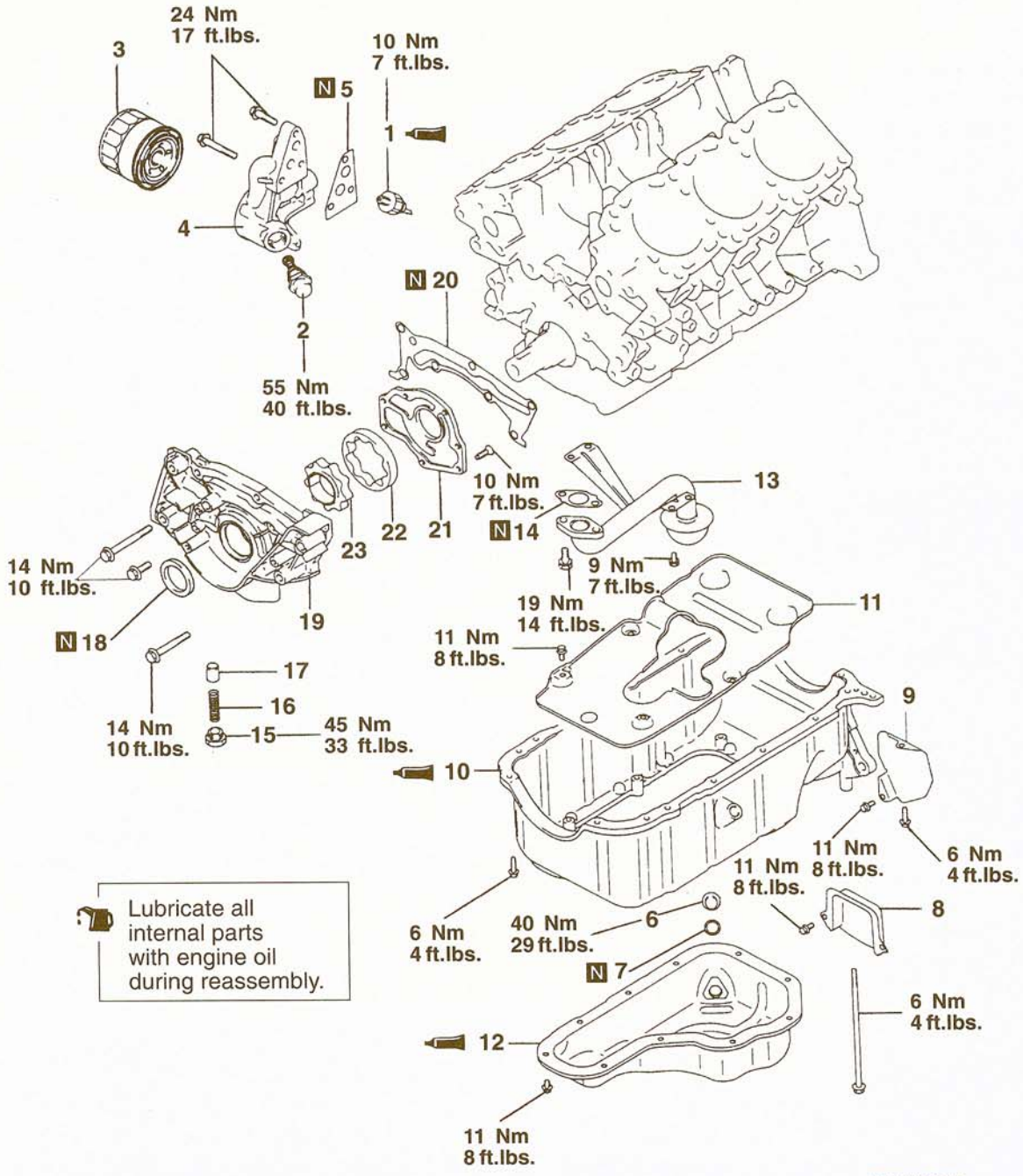


Z7EN0666

**Removal steps**

- ▶G◀ 1. Oil pressure gauge unit
- 2. Oil cooler by-pass valve
- ▶F◀ 3. Oil filter
- 4. Oil filter bracket
- 5. Oil filter bracket gasket
- 6. Drain plug
- ▶E◀ 7. Drain plug gasket
- 8. Cover
- 9. Cover
- ◀A▶ ▶D◀ 10. Oil pan, upper
- 11. Baffle plate
- ◀B▶ ▶C◀ 12. Oil pan, lower
- 13. Oil screen
- 14. Oil screen gasket
- 15. Plug
- 16. Relief spring
- 17. Relief plunger
- ▶B◀ 18. Crankshaft oil seal
- 19. Oil pump case
- 20. Oil pump case gasket
- 21. Oil pump cover
- ◀C▶ ▶A◀ 22. Oil pump outer rotor
- ◀C▶ ▶A◀ 23. Oil pump inner rotor

**TSB Revision**

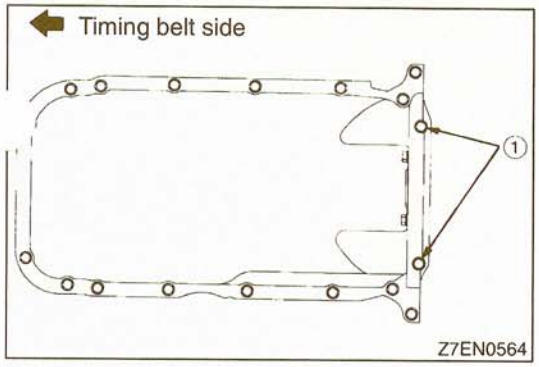


## REMOVAL SERVICE POINT

### ◀A▶ OIL PAN, UPPER REMOVAL

(1) Remove the bolts 1 shown in the illustration.
(2) Remove all other bolts.

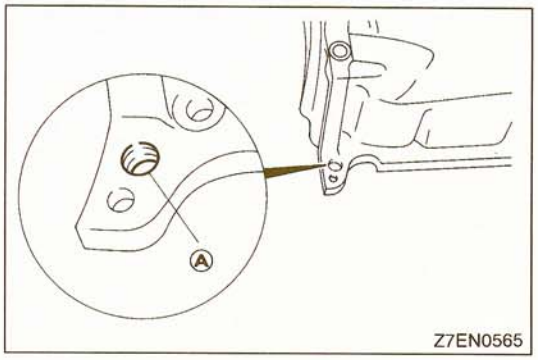


(3) Thread the bolt into the illustrated bolt hole A (at each end) to float and remove the oil pan.

**Caution**
**Do not use a scraper or special tool to remove the oil pan.**

### ◀B▶ OIL PAN, LOWER REMOVAL

**Caution**
**Do not use a scraper or special tool to remove the oil pan.**

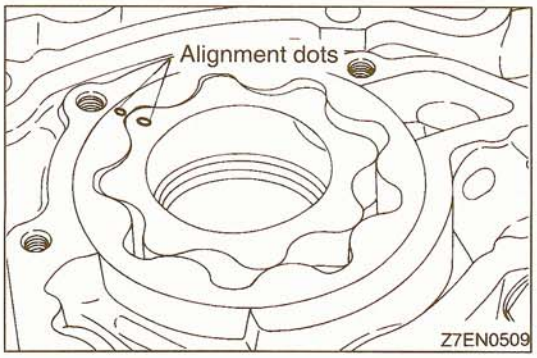


### ◀C▶ OUTER ROTOR/INNER ROTOR REMOVAL

(1) Make alignment dots on the outer and inner rotors for reference in reassembly.

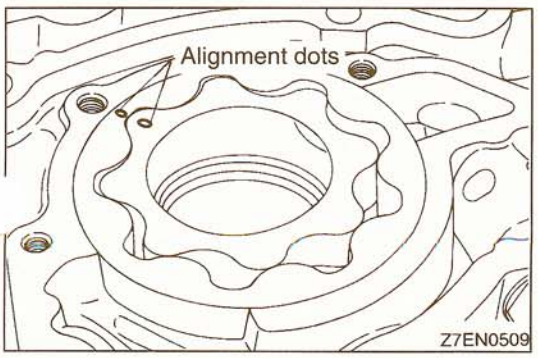


## INSTALLATION SERVICE POINTS

### ▶A◀ INNER ROTOR/OUTER ROTOR INSTALLATION

(1) Apply engine oil to the rotors. Then, install the rotors ensuring that the alignment dots made at disassembly are properly aligned.

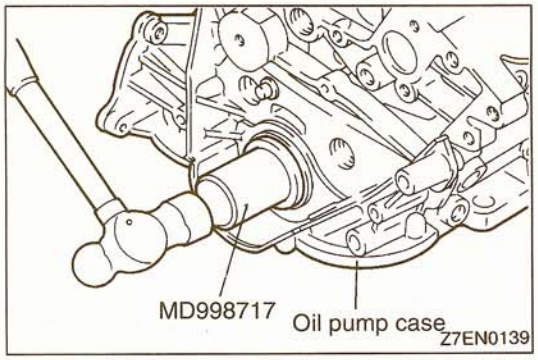


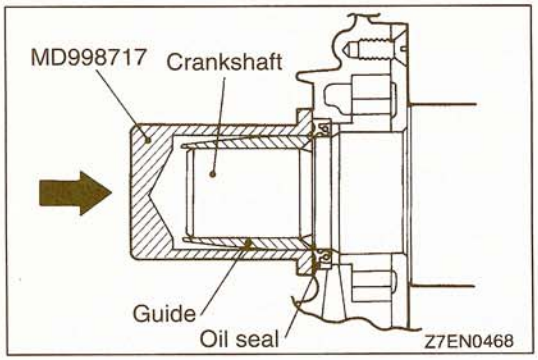


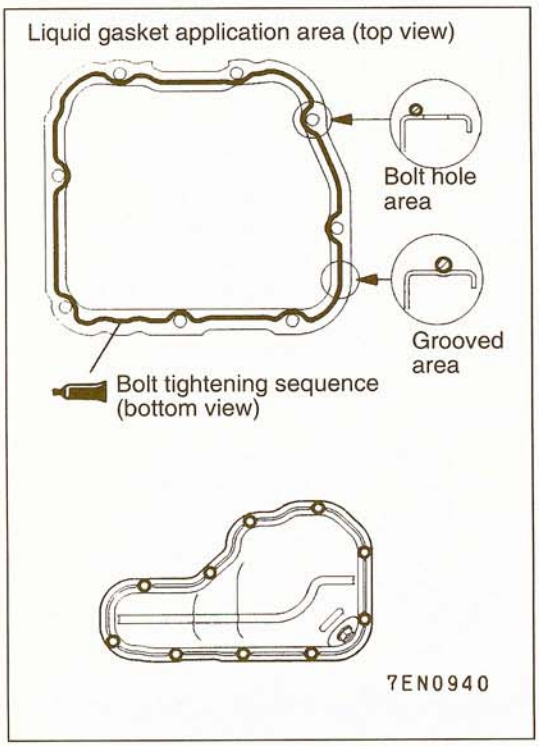


### ▶B◀ CRANKSHAFT OIL SEAL INSTALLATION

(1) Using the special tool, knock the oil seal into the oil pump case.

NOTE
Knock it as far as it goes.

### ▶C◀ OIL PAN, LOWER INSTALLATION

(1) Clean the gasket surfaces of the upper and lower oil pans.
(2) Apply a 4 mm (.157 in.) diameter bead of sealant to the oil pump case. Be sure to install the oil pan quick while the sealant is wet (within 15 minutes).
(3) After installation, keep the sealed area away from the oil and coolant for approx. 1 hour.

**Specified sealant:**
**MITSUBISHI GENUINE Part No. MD970389 or equivalent**

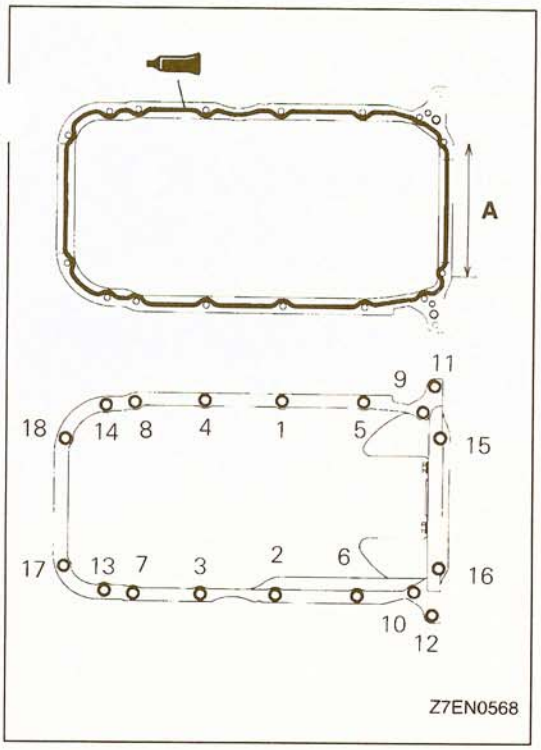


### ▶D◀ OIL PAN, UPPER INSTALLATION

(1) Clean the gasket surfaces of the cylinder block and upper oil pan.
(2) Apply a 4 mm (.157 in.) diameter bead of sealant to the oil pump case. Be sure to install the oil pan quickly while the sealant is wet (within 15 minutes).
(3) After installation, keep the sealed area away from the oil and coolant for approx. 1 hour.

**Caution**
**When installing the upper oil pan, be sure not to expel the sealant from the oil pan flange at portion A in the illustration.**

**Specified sealant:**
**MITSUBISHI GENUINE Part No. MD970389 or equivalent**

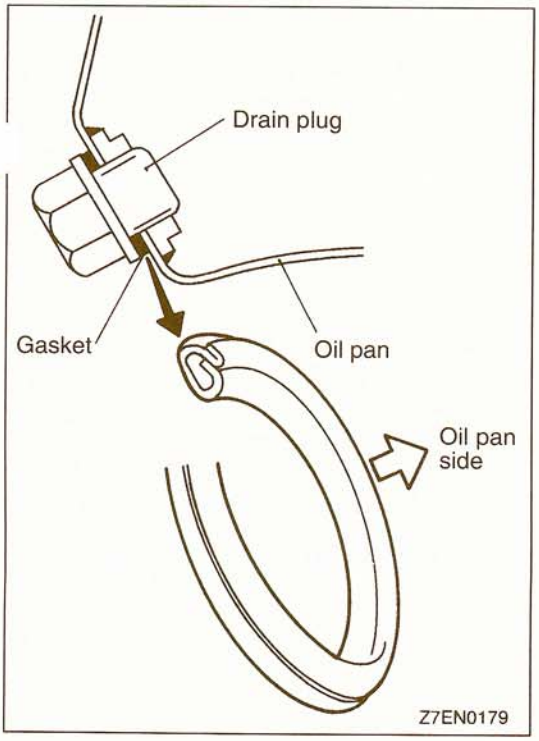


### ▶E◀ DRAIN PLUG GASKET INSTALLATION

(1) Install the drain plug gasket as illustrated.

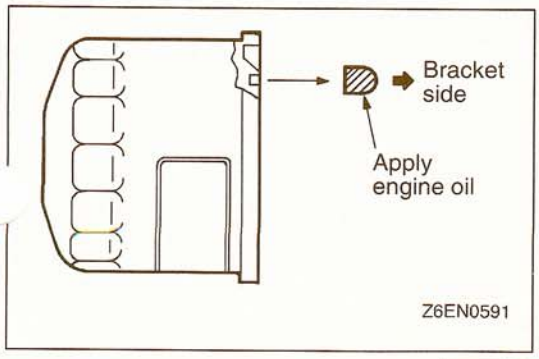


### ▶F◀ OIL FILTER INSTALLATION

(1) Clean the installation surface of the filter bracket.
(2) Apply engine oil to the O-ring of the oil filter.
(3) Screw the oil filter on until the O-ring contacts the bracket. Then tighten 3/4 turn [14 Nm (10 ft.lbs)].

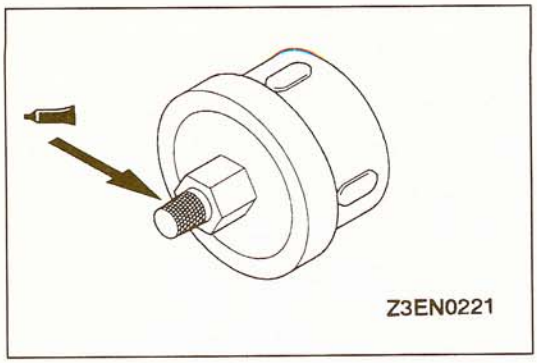


**▶G◀SEALANT APPLICATION TO OIL PRESSURE GAUGE UNIT**

(1) Coat the threads of the gauge unit with sealant and insta it using the special tool.

**Specified sealant:**
**3M ATD Part No.8660 or equivalent**

**Caution**
1. **Keep the end of threaded portion clear of sealant.**
2. **Avoid an overtightening.**

## INSPECTION

11300820068

### OIL PUMP

(1) Check the tip clearance.

**Standard value: 0.06–0.18 mm (.0024–.0071 in.)**

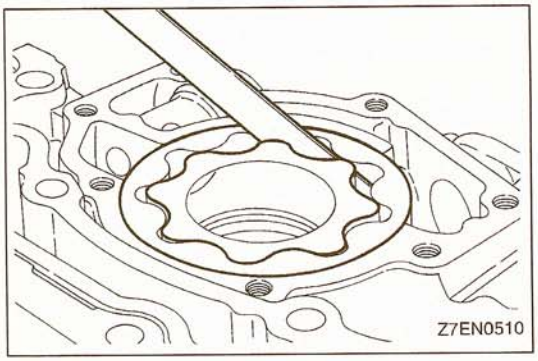


(2) Check the side clearance.

**Standard value: 0.04–0.10 mm (.0016–.0039 in.)**

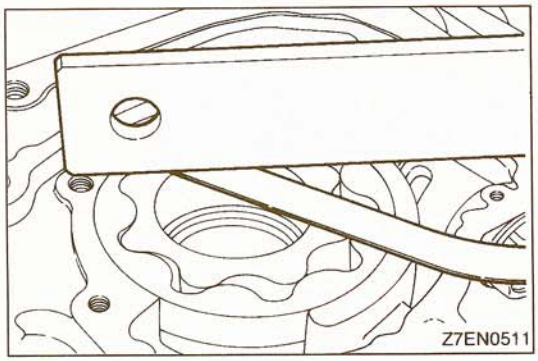


(3) Check the body clearance.

**Standard value: 0.10–0.18 mm (.0040–.0070 in.)**

**Limit: 0.35 mm (.0138 in.)**

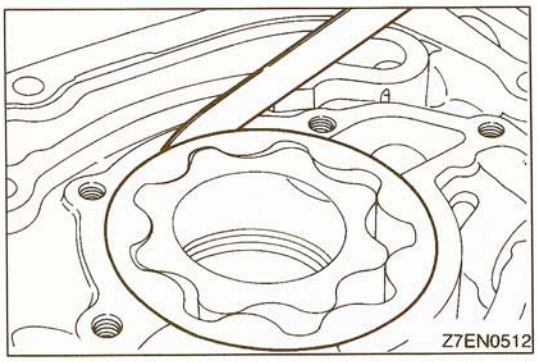


### OIL COOLER BYPASS VALVE

(1) Make sure that the valve moves smoothly.
(2) Ensure that the dimension L measures the standard value under normal temperature and humidity.

**Dimension L: 34.5 mm (1.358 in.)**

(3) The dimension must be the standard value whe. measured after the valve has been dipped in 100°C (212°F) oil.

**Dimension L: 40 mm (1.57 in.) or more**

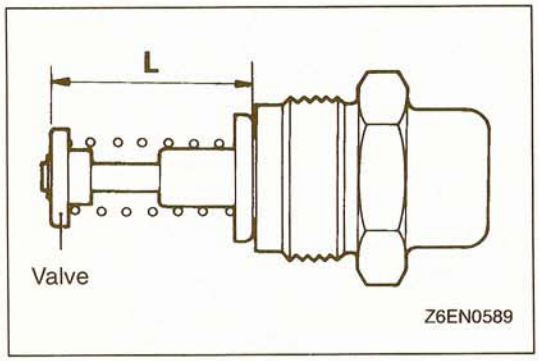


**TSB Revision**

# PISTON AND CONNECTING ROD

11300840149

## REMOVAL AND INSTALLATION

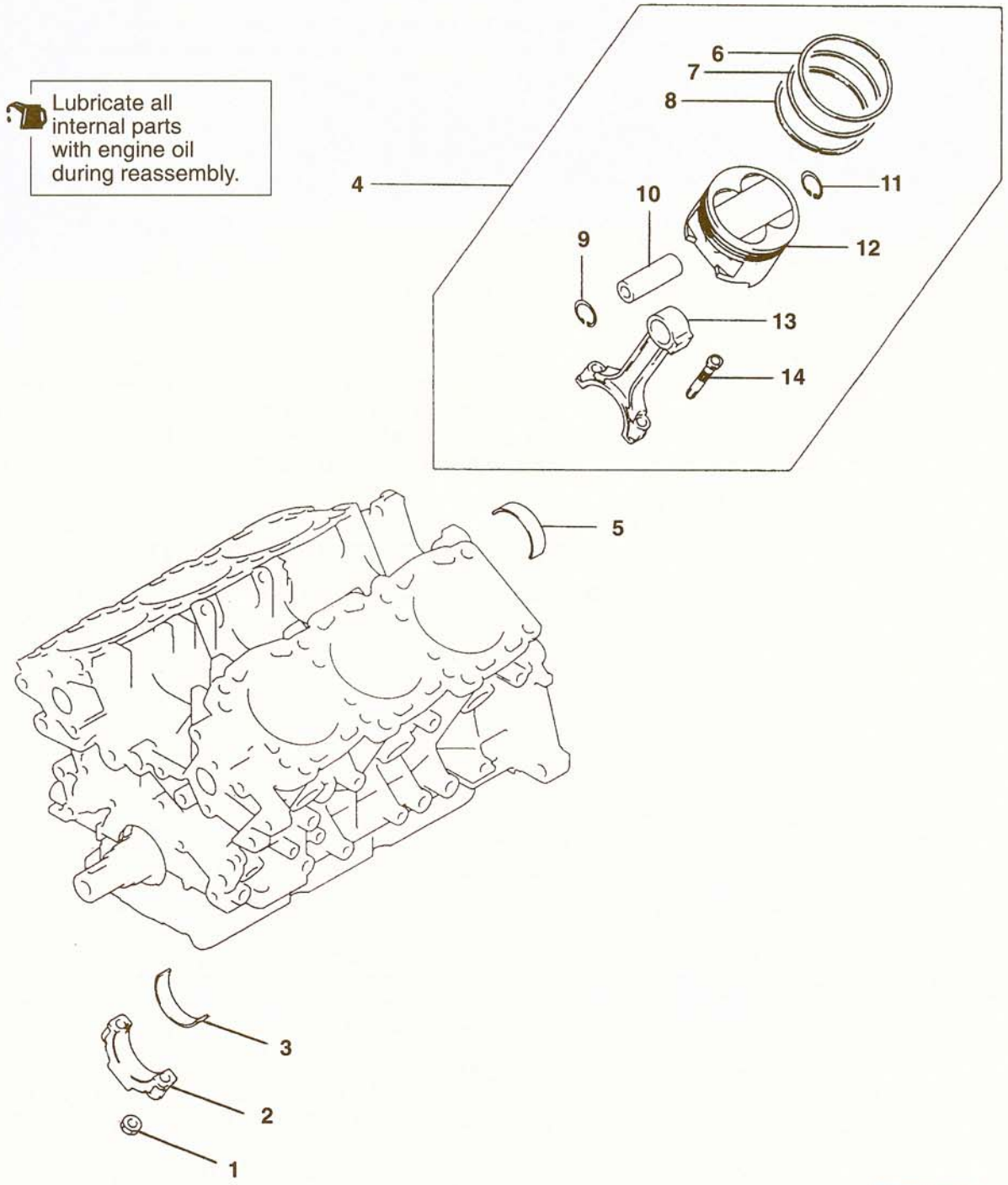


**Removal steps**

| | | |
|---|---|---|
| | ▶G◀ | 1. Nut |
| ◀A▶ | ▶F◀ | 2. Connecting rod cap |
| | ▶D◀ | 3. Connecting rod bearing, lower |
| | ▶E◀ | 4. Piston and connecting rod assembly |
| | ▶D◀ | 5. Connecting rod bearing, upper |
| | ▶C◀ | 6. Piston ring No. 1 |
| | ▶C◀ | 7. Piston ring No. 2 |
| | ▶B◀ | 8. Oil ring |
| | | 9. Snap ring |
| ◀B▶ | ▶A◀ | 10. Piston pin |
| | | 11. Snap ring |
| | | 12. Piston |
| | | 13. Connecting rod |
| | | 14. Bolt |

**TSB Revision**

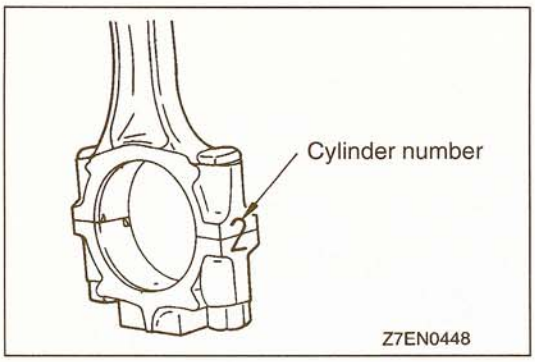


## REMOVAL SERVICE POINTS

### ◀A▶ CONNECTING ROD CAP REMOVAL

(1) Mark the cylinder number on the side of the connecting rod big end for correct reassembly.
(2) Keep the removed connecting rods, caps, and bearings in order according to the cylinder number.

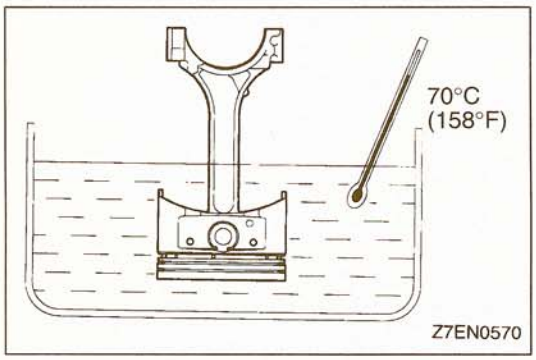


### ◀B▶ PISTON PIN REMOVAL

(1) Remove the snap rings.
(2) Heat the piston to approximately 70°C (158°F) and pull out the piston pin.

**Caution**
**The clearance between the piston and the piston pin is an almost tight fit at normal temperature. Therefore, be sure to heat the piston before pulling out the piston pin. In addition, note that the piston is hot after heating.**

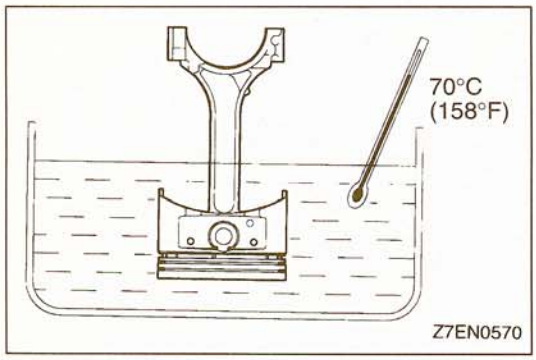


## INSTALLATION SERVICE POINTS

### ▶A◀ PISTON PIN INSTALLATION

(1) Heat the piston pin to approximately 70°C (158°F) and set the snap ring on one side first. Be sure to install the snap ring with the shear droop directed toward the inside.

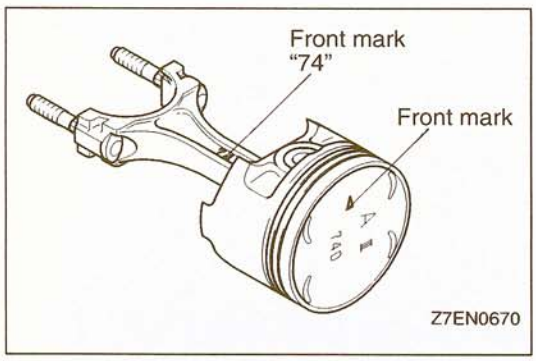


(2) Make sure that the identification marks of the piston, piston pin and connecting rod small end are of the appropriate class.
(3) With the front mark of the connecting rod and that of the piston located on the same side, insert the piston pin.
(4) After insertion of the piston pin, set the other snap ring.

**Caution**
1. **Apply ample coat of engine oil to the periphery of the piston pin and the hole of the connecting rod small end.**
2. **The clearance between the piston and the piston pin is an almost tight fit at normal temperature. Therefore, be sure to heat the piston before inserting the piston pin.**
3. **In addition, note that the piston is hot after heating.**

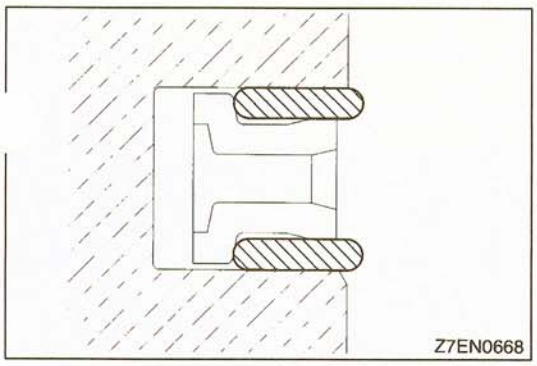


### ▶B◀ OIL RING INSTALLATION

(1) Fit the oil ring spacer into the piston ring groove.

NOTE
The side rails and spacer may be installed in either direction.

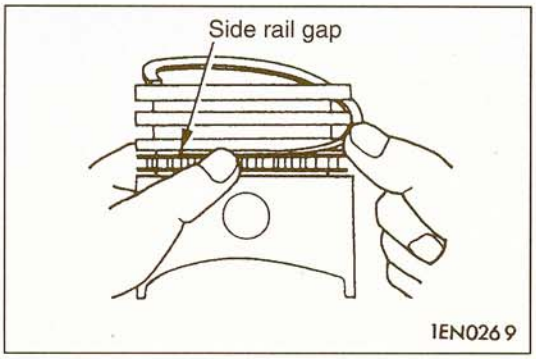


(2) Install the upper side rail
To install the side rail, first fit one end of the rail into the piston groove, then press the remaining portion into the position by finger. See illustration.
Use of a ring expander to expand the side rail end gap can break the side rail, unlike other piston rings.

NOTE
Do not use any piston ring expander when installing the side rail.

(3) Install the lower side rail in the same procedure as described in step (2).
(4) Make sure that the side rails move smoothly in either direction.

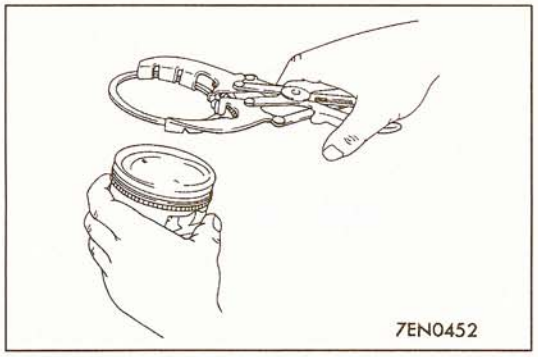


### ▶C◀ PISTON RING NO.2/PISTON RING NO.1 INSTALLATION

(1) Using a piston ring expander, fit No.2 and then No.1 piston ring into position.

NOTE
(1) The ring end is provided with the identification mark.

**Identification mark:**
**No.1 ring 1T**
**No.2 ring 2T**

(2) Install piston rings with identification mark facing up, to the piston crown side.

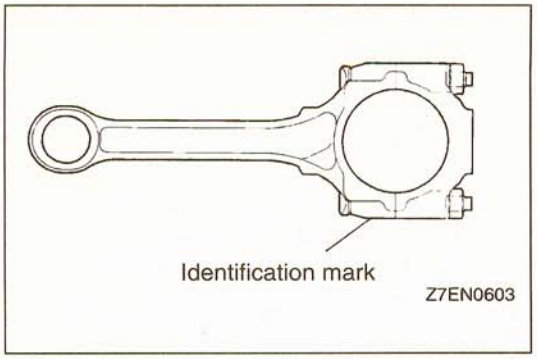


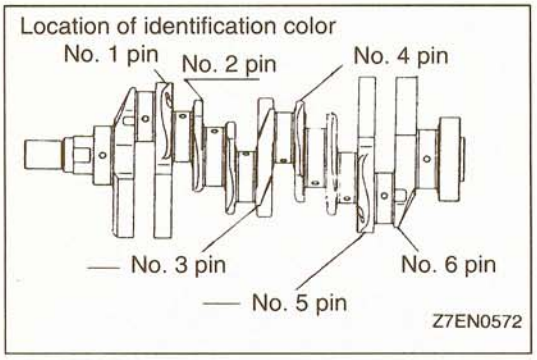


## ▶D◀ CONNECTING ROD BEARING INSTALLATION

(1) When replacing the bearing, select the proper bearing according to the crankshaft identification color and th connecting rod identification mark and install it.

| Crankshaft | | | Connecting rod | | Connecting rod bearing | |
|---|---|---|---|---|---|---|
| Identification mark (production part) | Identification color (service part) | Pin outer diameter mm (in.) | Identification mark | Big end inner diameter mm (in.) | Identification color | Thickness mm (in.) |
| None | Yellow | 54.994 – 55.000 (2.1651 – 2.1654) | 0 | 58.000 – 58.006 (2.2835 – 2.2837) | Pink | 1.460 – 1.486 (.0575 – .0585) |
| | | | 1 | 58.006 – 58.012 (2.2837 – 2.2839) | Red | 1.486 – 1.489 (.0585 – .0586) |
| | | | 2 | 58.012 – 58.018 (2.2839 – 2.2842) | Green | 1.489 – 1.492 (.0586 – .0587) |
| None | None | 54.988 – 54.994 (2.1649 – 2.1651) | 0 | 58.000 – 58.006 (2.2835 – 2.2837) | Red | 1.486 – 1.489 (.0585 – .0586) |
| | | | 1 | 58.006 – 58.012 (2.2837 – 2.2839) | Green | 1.489 – 1.492 (.0586 – .0587) |
| | | | 2 | 58.012 – 58.018 (2.2839 – 2.2842) | Black | 1.492 – 1.495 (.0587 – .0589) |
| None | White | 54.982 – 54.988 (2.1646 – 2.1649) | 0 | 58.000 – 58.006 (2.2835 – 2.2837) | Green | 1.489 – 1.492 (.0586 – .0587 |
| | | | 1 | 58.006 – 58.012 (2.2837 – 2.2839) | Black | 1.492 – 1.495 (.0587 – .0589) |
| | | | 2 | 58.012 – 58.018 (2.2839 – 2.2842) | Brown | 1.495 – 1.498 (.0589 – .0590) |

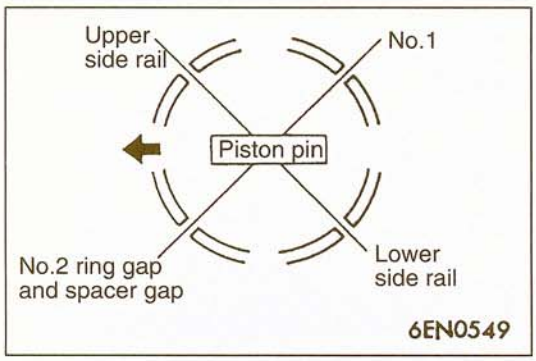


## ▶E◀ PISTON AND CONNECTING ROD INSTALLATION

(1) Liberally coat the circumference of the piston, piston ring, and oil ring with engine oil.
(2) Arrange the piston ring and oil ring gaps (side rail and spacer) as shown in the illustration.
(3) Rotate the crankshaft so that the crank pin is on the center of the cylinder bore.

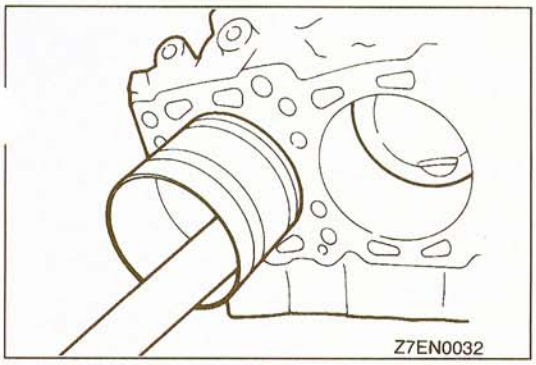


(4) Use suitable thread protectors on the connecting rod bolts before inserting the piston and connecting rod assembly into the cylinder block.
Care must be taken not to nick the crank pin.
(5) Using a suitable piston ring compressor tool, install the piston and connecting rod assembly into the cylinder block.

**Caution**
**Install the piston with the front mark (arrow mark) on the top of the piston directed towards the engine front (timing belt side).**

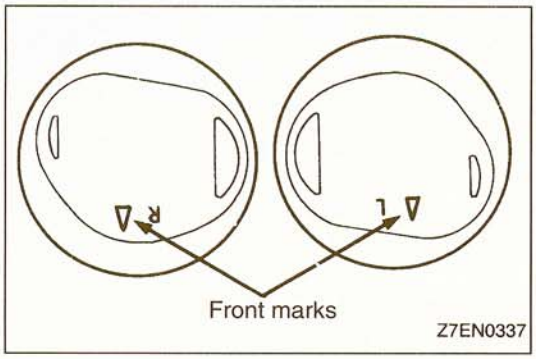


NOTE
Two types of pistons, one for cylinders 1, 3 and 5 and the other for cylinders 2, 4 and 6, have been used.
Piston with R: For cylinders 1, 3 and 5
Piston with L: For cylinders 2, 4 and 6

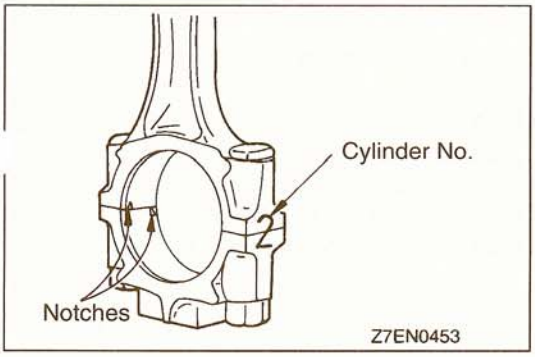


### ▶F◀ CONNECTING ROD CAP INSTALLATION

(1) Mate the correct bearing cap with the correct connecting rod by checking with the alignment marks marked during disassembly. If a new connecting rod is used which has no alignment mark, position the notches for locking the bearing on the same side.

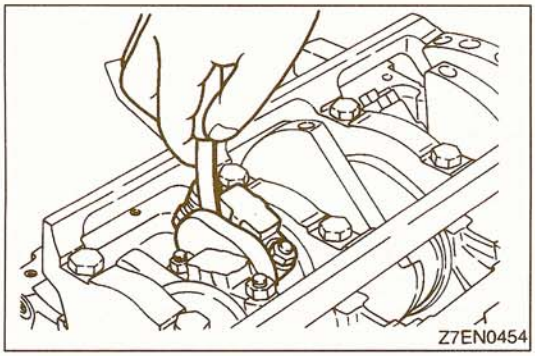


(2) Check if the thrust clearance in the connecting rod big end is correct.

**Standard value: 0.10–0.25 mm (.0039–.0098 in.)**
**Limit: 0.4 mm (.016 in.)**

### ▶G◀NUT INSTALLATION

NOTE
Installation of the connecting rod nut should be performe' with the cylinder head or the spark plug removed

(1) Since the connecting rod bolts and nuts are torqued using the plastic area tightening method, the bolts should be examined BEFORE reuse. If the bolt threads are "necked down", the bolt should be replaced. Necking can be checked by running a nut with fingers to the full length of the bolt threads. If the nut does not run down smoothly, the bolt should be replaced.
(2) Before installation of each nut, apply engine oil to the threaded portion and bearing surface of the nut
(3) Loosely tighten each nut to the bolt.
(4) Then tighten the nuts alternately to a torque of 34 Nm (25 ft.lbs.) to install the cap properly.
(5) Make a paint mark on the head of each nut.
(6) Make a paint mark on the bolt end at the position 90° to 100° from the paint mark made on the nut in the direction of tightening the nut.
(7) Give a 90° to 100° turn to the nut and make sure that the paint mark on the nut and that on the bolt are in alignment.

**Caution**
**1. If the nut is turned less than 90°, proper fastening performance may not be expected. When tightening the nut, therefore, be careful to give a sufficient turn to it.**
**2. If the nut is overtightened (exceeding 100°), loosen the nut completely and then retighten it by repeating the tightening procedure from step (1).**

## INSPECTION

11300850142

### PISTON

(1) Replace the piston if scratches or seizure is evident on its surfaces (especially the thrust surface). Replace the piston if it is cracked.

### PISTON RING

(1) Check the piston ring for damage, excessive wear, and breakage and replace if defects are evident. If the piston has been replaced with a new one, the piston rings must also be replaced with new ones.

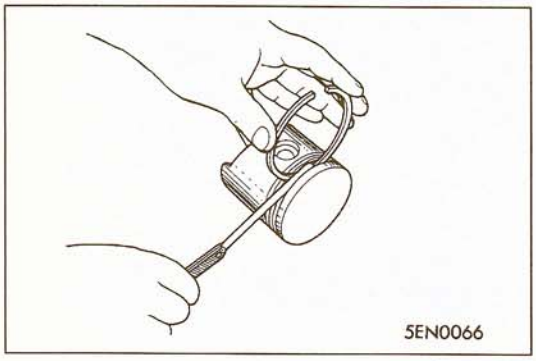
5EN0066

(2) Check for clearance between the piston ring and ring groove. If the limit is exceeded, replace the ring or piston, or both.

**Standard value:**
**No. 1 0.03–0.07 mm (.0012–.0028 in.)**
**No. 2 0.02–0.06 mm (.0008–.0024 in.)**

**Limit: 0.1 mm (.004 in.)**

**TSB Revision**

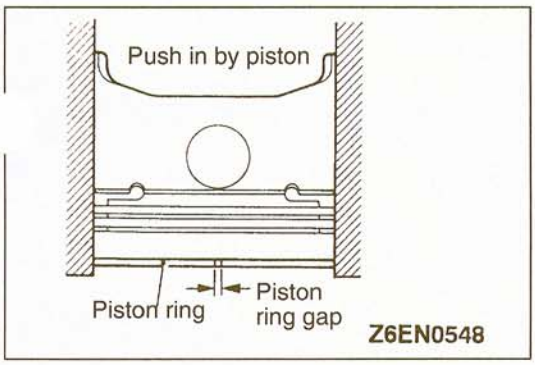


(3) Insert the piston ring into the cylinder bore. Force the ring down with a piston, the piston crown being in contact with the ring, to correctly position it at right angles to the cylinder wall. Then, measure the end gap with a feeler gauge.
If the ring gap is excessive, replace the piston ring.

**Standard value:**
**No. 1 0.30–0.45 mm (.0118–.0177 in.)**
**No. 2 0.45–0.60 mm (.0177–.0236 in.)**
**Oil 0.10–0.35 mm (.0039–.0138 in.)**

**Limit:**
**No. 1, No. 2 0.8 mm (.031 in.)**
**Oil 1.0 mm (.039 in.)**

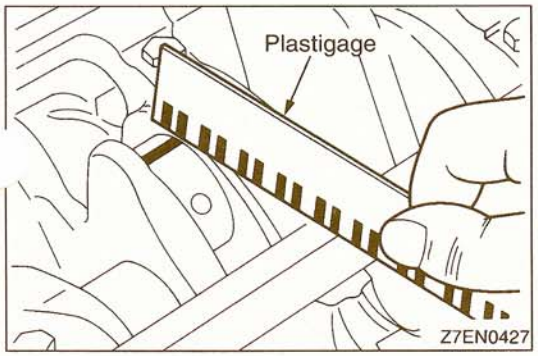


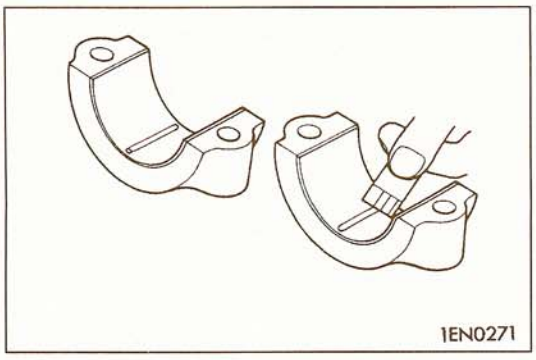


## CRANKSHAFT PIN OIL CLEARANCE (PLASTIGAGE METHOD)

The crankshaft oil clearance can be measured easily by using Plastigage, as follows:
(1) Remove oil and grease and any other foreign matters from the crankshaft pin and the bearing inner surface.
(2) Install the crankshaft.
(3) Cut Plastigage to the same length as the width of the bearing and place it on the pin in parallel with its axis.
(4) Gently place the crankshaft bearing cap over it and tighten the bolts to the specified torque.
(5) Remove the bolts and gently remove the crankshaft bearing cap.
(6) Measure the width of the smashed Plastigage at its widest section by using a scale printed on the Plastigage bag.

**Standard value: 0.03–0.05 mm (.0012–.0020 in.)**

**Limit: 0.1 mm (.004 in.)**

# CRANKSHAFT, FLYWHEEL AND DRIVE PLATE

11300870148

## REMOVAL AND INSTALLATION

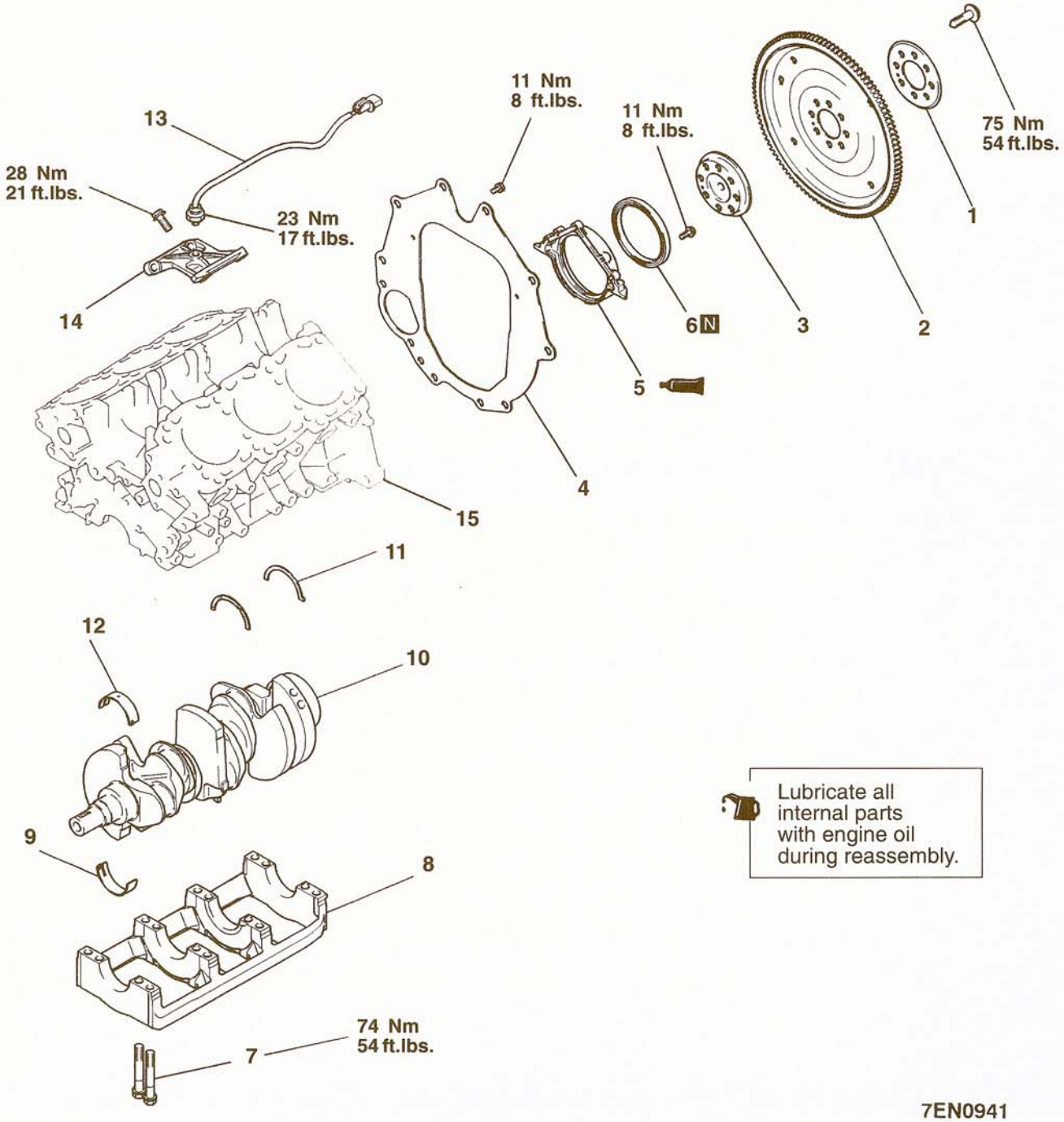


**Removal steps**

1. Adaptor plate
2. Drive plate
3. Crankshaft adaptor
4. Rear plate
- ▶D◀ 5. Oil seal case
- ▶C◀ 6. Crankshaft rear oil seal
- ▶B◀ 7. Bearing cap bolt
- ▶B◀ 8. Bearing cap
- ▶A◀ 9. Crankshaft bearing, lower
10. Crankshaft
- ▶A◀ 11. Thrust bearing
- ▶A◀ 12. Crankshaft bearing, upper
13. Knock sensor
14. Knock sensor bracket
15. Cylinder block

TSB Revision

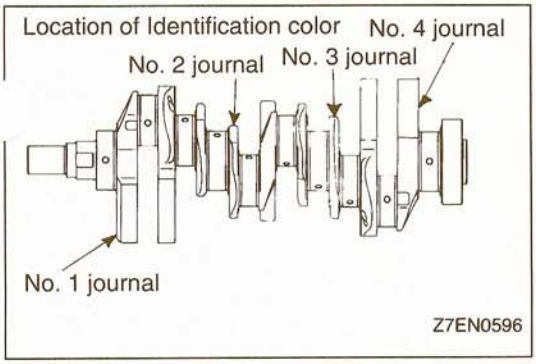


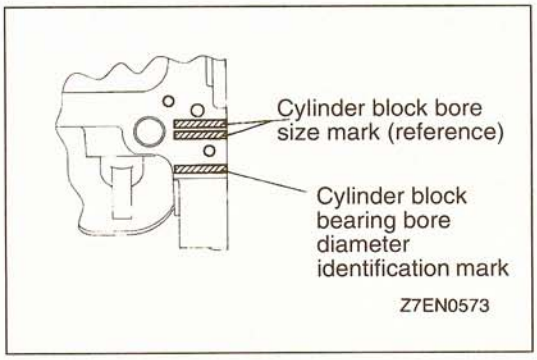


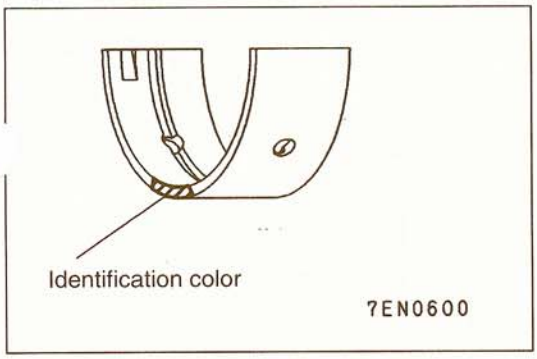


## INSTALLATION SERVICE POINTS

### ▶A◀ CRANKSHAFT BEARING INSTALLATION

When the bearing needs replacing, select and install a proper bearing by the following procedure.

(1) Measure the crankshaft journal diameter and confirm its classification from the following table. In the case of a bearing supplied as a service part, its identification color is painted at the position shown in the illustration.

(2) The cylinder block bearing bore diameter identification marks are stamped at the position shown in the illustration from the front of the engine, beginning at No 1.

| Crankshaft journal | | | | Cylinder block bearing bore diameter | Crankshaft bearing |
|---|---|---|---|---|---|
| Classification | Identification mark (production part) | Identification color (service part) | Outer diameter mm (in.) | Identification mark | Identification color (service part) |
| 1 | None | Yellow | 63.994–64.000 (2.5194–2.5197) | I | Pink |
| | | | | II | Red |
| | | | | III | Green |
| 2 | None | None | 63.988–63.994 (2.5192–2.5194) | I | Red |
| | | | | II | Green |
| | | | | III | Black |
| 3 | None | White | 63.982–63.988 (2.5190–2.5192) | I | Green |
| | | | | II | Black |
| | | | | III | Brown |

(3) Select a proper bearing from the above table on the basis of the identification data confirmed under Items (1) and (2).

[Example]

1) If the measured value of a crankshaft journal outer diameter is 63.996 mm, the journal is classified as "1" in the table. (In case the crankshaft is also replaced by a spare part, check the identification color painted on the new crankshaft. If it is yellow, for example, the journal is classified as "1".)

2) Next, check the cylinder block bearing hole identification mark stamped on the cylinder block. If it is "I" , read the "Identification color for the spare bearing" column to find the identification color of the bearing to be used. In this case, it is "pink".

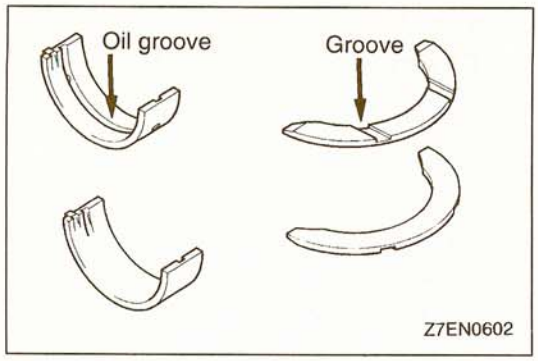


(4) Install the bearing halves with oil groove in the cylinder block side.
(5) Install the bearing halves without oil groove on the bearing cap side.
(6) Install the thrust bearings on both sides of the No.3 bearing with the grooves facing outward.

### ▶B◀ BEARING CAP/BEARING BOLT INSTALLATION

(1) Attach the bearing cap on the cylinder block as shown in the illustration.
(2) Tighten the bearing cap bolts to the specified torque in the sequence shown in the illustration.
(3) Check that the crankshaft rotates smoothly.

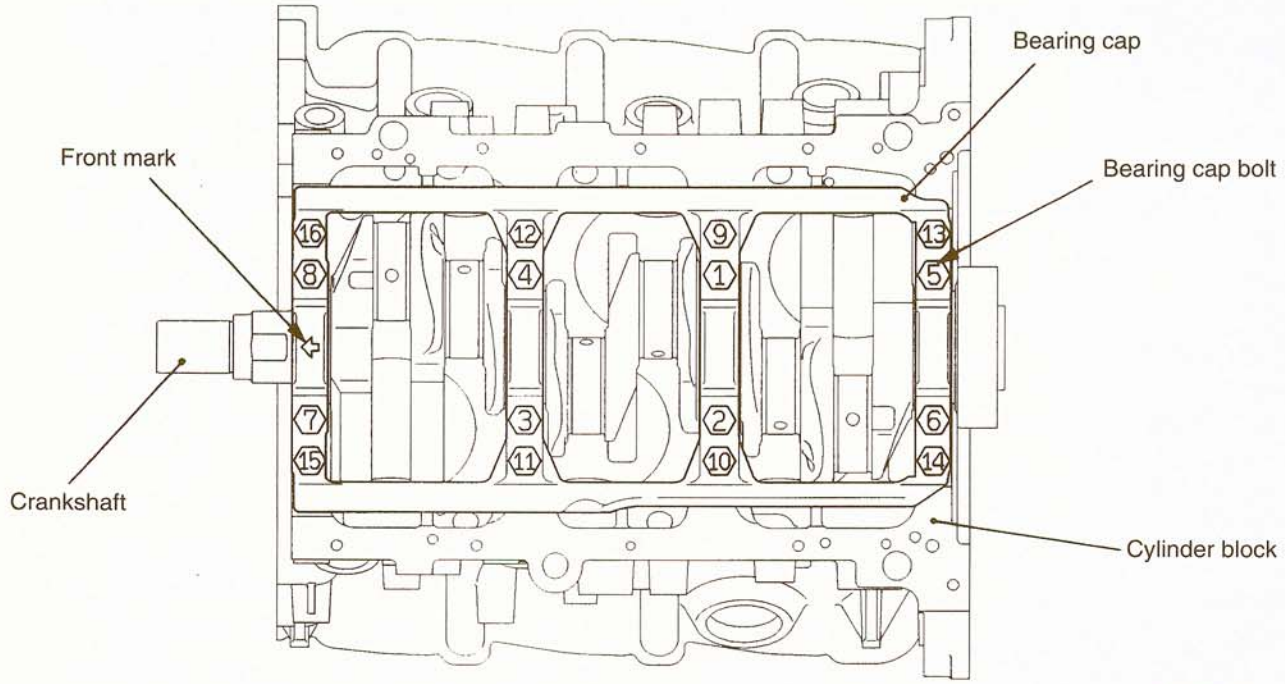


7EN0942

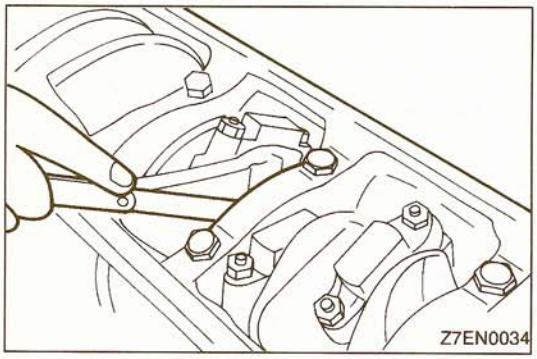


(4) Check the end plate. If it exceeds the limit value, replace the thrust bearing.

**Standard value : 0.05–0.25 mm (.0020–.0098 in.)**

**Limit: 0.3 mm (.012 in.)**

**TSB Revision**

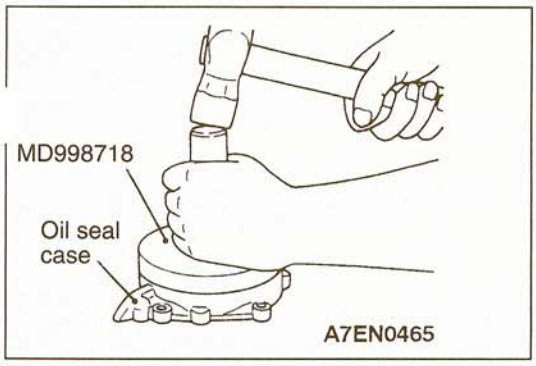


### ▶C◀ CRANKSHAFT REAR OIL SEAL INSTALLATION

(1) Using the special tool, press-fit a new crankshaft rear oil seal into the oil seal case.

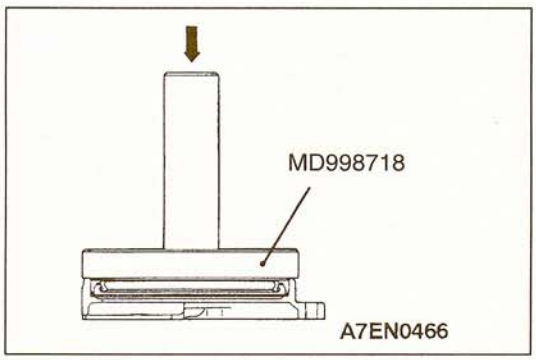


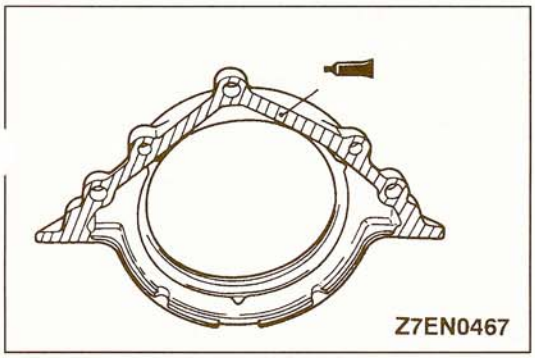


### ▶D◀ OIL SEAL CASE INSTALLATION

(1) Apply specified sealant to the area shown in the illustration.

**Specified sealant:**
**MITSUBISHI GENUINE Part No. MD970389 or equivalent**

(2) Apply a small amount of engine oil to the entire circumference of the oil seal lip section, and place the oil seal on the cylinder block.

## INSPECTION

11300880127

### CRANKSHAFT

If the oil clearance exceeds the limit, replace the bearing, and crankshaft if necessary.

(1) Measure the outside diameter of the journals and the inside diameter of the crankshaft bearings. If the difference between them (oil clearance) exceeds the limit, replace the crankshaft bearing and, if necessary, crankshaft.

**Standard value: 0.02–0.04 mm (.0008–.0020 in.)**

**Limit: 0.1 mm (.004 in.)**

**Caution**
**Do not attempt an undersize machining of the crankshaft with special surface treatment. This crankshaft can be identified by its dull gray appearance.**

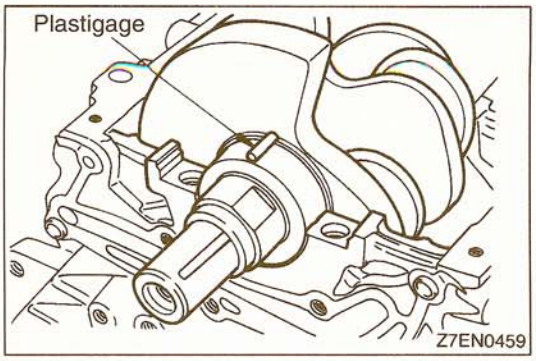


## CRANKSHAFT JOURNAL OIL CLEARANCE <PLASTIGAGE METHOD>

The crankshaft oil clearance can be measured easily by using Plastigage, as follows:

(1) Remove oil and grease and any other foreign matters from the crankshaft journal and bearing inner surface.
(2) Install the crankshaft.
(3) Cut Plastigage to the same length as the width of the bearing and place it on the journal in parallel with its axis.

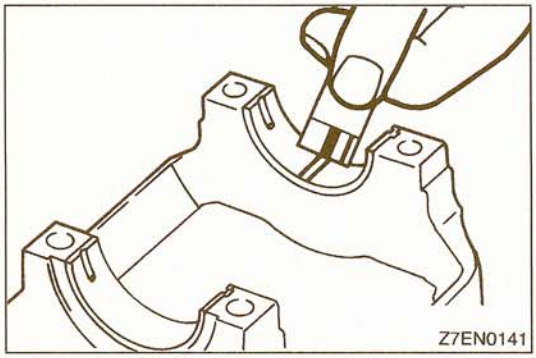


(4) Gently place the crankshaft bearing cap over it and tighten the bolts to the specified torque.
(5) Remove the bolts and gently remove the crankshaft bearing cap.
(6) Measure the width of the smashed Plastigage at its widest section by using a scale printed on the Plastigage bag.

## CRANKSHAFT REAR OIL SEAL

(1) Check the oil seal lip for wear and damage.
(2) Check rubber for deterioration or hardening.
(3) Check the oil seal case for cracks and damage.

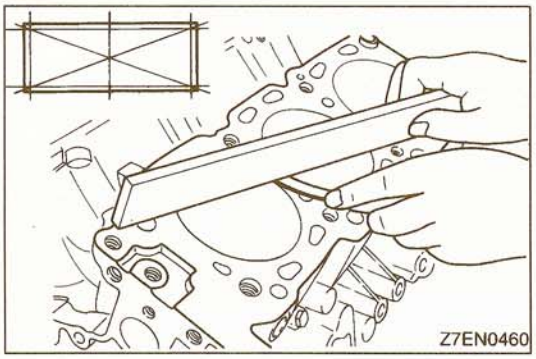


## CYLINDER BLOCK

(1) Visually check for scratches, rust, and corrosion. Use also a flaw detecting agent for the check. If defects are evident, correct, or replace.
(2) Using a straightedge and feeler gauge, check the block top surface for warpage. Make sure that the surface is free from gasket chips and other foreign matter.

**Standard value: 0.05 mm (.002 in.)**

**Limit: 0.1 mm (.004 in.)**

(3) If the distortion is excessive, correct within the allowable limit or replace.

**Grinding limit: 0.2 mm (.008 in.)**
***Includes/combined with cylinder head grinding.**

**Cylinder block height (when new):**
**227.9–228.1 mm (8.972–8.980 in.)**

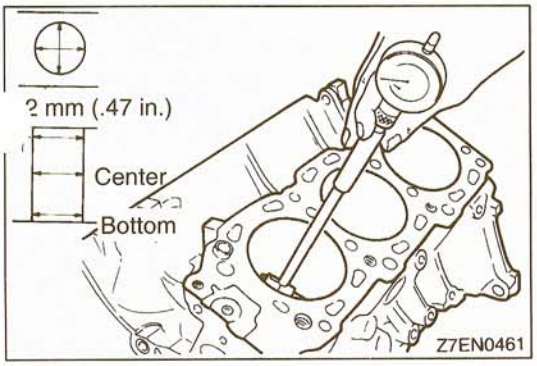


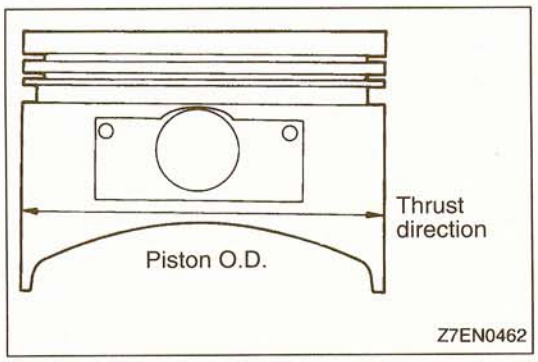


(4) Check the cylinder walls for scratches and seizure. If defects are evident, correct (rebore to an oversize) or replace.

(5) Using a cylinder gauge, measure the cylinder bore and cylindricity. If worn badly, correct by boring the cylinders to an oversize and replace pistons and piston rings. Measure at the points shown in the illustration.

**Standard value:**
**Cylinder I.D.: 93.0 mm (3.66 in.)**
**Cylindricity: 0.01 mm (.0004 in.)**

## BORING CYLINDER

(1) Oversize pistons to be used should be determined on the basis of the largest bore cylinder.

**Piston size identification**

| Size | Identification mark |
|---|---|
| 0.50 mm (.02 in.) O.S. | 0.50 |
| 1.00 mm (.04 in.) O.S. | 1.00 |

NOTE
Size mark is stamped on the piston top.

(2) Measure the outside diameter of the piston to be used. Measure it in the thrust direction as shown.

(3) Based on the measured piston O.D., calculate the boring finish dimension.

**Boring finish dimension =**
**Piston O.D. + (clearance between piston O.D. and cylinder) – 0.02 mm (.0008 in.) (honing margin)**

(4) Bore all cylinders to the calculated boring finish dimension.

**Caution**
**To prevent distortion that may result from temperature rise during honing, bore cylinders in the order of No.2, No.4, No.6, No.1, No.3 and No.5.**

(5) Hone to the final finish dimension (piston O.D. + clearance between piston O.D. and cylinder).

(6) Check the clearance between the piston and cylinder.

**Clearance between piston and cylinder:**
**0.03–0.05 mm (.0012–.0020 in.)**

NOTE
When boring cylinders, finish all of six cylinders to the same oversize. Do not bore only one cylinder to an oversize.

# BRACKET

11300900045

## REMOVAL AND INSTALLATION

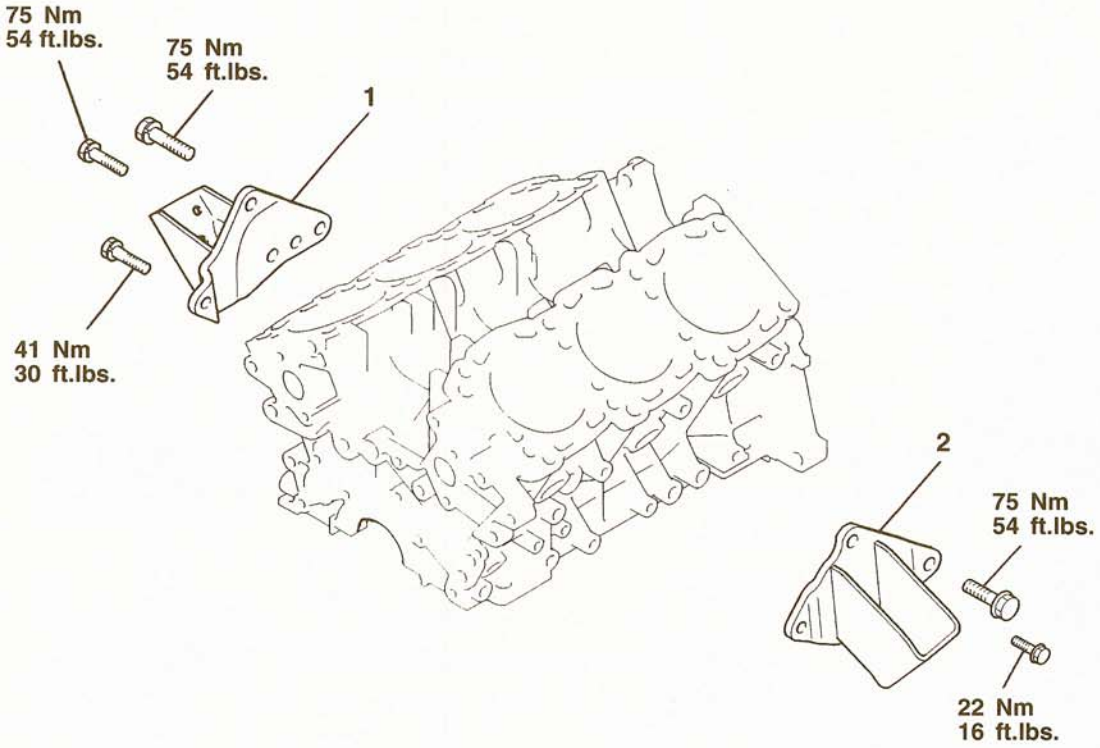


7EN0943

**Removal steps**

1. Engine support bracket, right
2. Engine support bracket, left

# FUEL

## CONTENTS

13109000119


MULTIPORT FUEL INJECTION ..... 13A

ELECTRONIC CONTROL TYPE CARBURETOR ..... 13B

CONVENTIONAL TYPE CARBURETOR ..... 13C

VARIABLE VENTURI TYPE CARBURETOR ..... 13D

DIESEL FUEL ..... 13E

FUEL SUPPLY ..... 13F

TRACTION CONTROL SYSTEM ..... 13H


NOTE
The tinted sections are not included in this manual.

NOTES

# MULTIPORT FUEL INJECTION

## CONTENTS

13109000126


**GENERAL INFORMATION ..... 3**

MFI System Diagram ..... 3

**ON-VEHICLE INSPECTION OF MFI COMPONENTS ..... 51**

Air Conditioning Switch and Compressor Clutch Relay ..... 110
Anti-Lock Braking Signal ..... 159
Barometric Pressure Sensor ..... 78
Camshaft Position Sensor ..... 89
Closed Throttle Position Switch ..... 86
Component Inspection Procedure ..... 62
Component Location ..... 51
Crankshaft Position Sensor ..... 96
EGR Solenoid <SOHC – Federal, DOHC> ... 157
Electrical Load Switch <DOHC> ..... 113
Engine Control Module Power Ground ..... 66
Engine Control Module Terminal Voltage Check ..... 169
Engine Coolant Temperature Sensor ..... 80
Evaporative Emission Purge Solenoid ..... 151
Evaporative Emission Ventilation Solenoid <SOHC – California> ..... 155
Fuel Pressure Test ..... 162
Fuel Pump ..... 67
Fuel Tank Differential Pressure Sensor <SOHC – California> ..... 160
Heated Oxygen Sensor ..... 117
Idle Air Control Motor (Stepper Motor) ..... 130
Ignition Coil and Ignition Power Transistor ... 135
Ignition Switch-ST <M/T> ..... 100
Ignition Switch-ST and Park/Neutral Position Switch <A/T> ..... 102
Injectors ..... 124
Intake Air Temperature Sensor ..... 75
Knock Sensor <DOHC> ..... 112
Manifold Differential Pressure (MDP) Sensor <SOHC – Federal, DOHC> ..... 115
Power Steering Pressure Switch ..... 108
Power Supply (MFI relay) and Ignition Switch-IG ..... 63
Throttle Position Sensor ..... 83
Variable Induction Control Solenoid <DOHC> ..... 149
Vehicle Speed Sensor ..... 106
Volume Air Flow Sensor ..... 70

**ON-VEHICLE SERVICE ..... 45**

Basic Idle Speed Adjustment ..... 45
Closed Throttle Position Switch and Throttle Position Sensor Adjustment ..... 48
Fixed SAS Adjustment ..... 50
Throttle Body (Throttle Valve Area) Cleaning ..... 48

**SPECIAL TOOLS ..... 9**

**SEALANT ..... 9**

**SERVICE SPECIFICATIONS ..... 9**

**THROTTLE BODY ..... 174**

**TROUBLESHOOTING ..... 11**

Check Chart Classified by Problem Symptoms ..... 38

Check Engine/Malfunction Indicator Lamp ..... 13

Explanation and Precaution Related to Harness Checking ..... 12

Explanation of Troubleshooting Procedures ..... 11

On-board Diagnostics ..... 15

Problem Symptoms Table (For Your Information) ..... 4

Reading of Diagnostic Trouble Codes ..... 37

# GENERAL INFORMATION

13100010128

## MULTIPORT FUEL INJECTION (MFI) SYSTEM DIAGRAM

<SOHC-12 valve engine>

| | | | |
|---|---|---|---|
| *1 Heated oxygen sensor (front)<br>*2 Volume air flow sensor<br>*3 Intake air temperature sensor<br>*4 Throttle position sensor<br>*5 Closed throttle position switch<br>*6 Camshaft position sensor<br>*7 Crankshaft position sensor<br>*8 Barometric pressure sensor<br>*9 Engine coolant temperature sensor<br>*10 Manifold differential pressure sensor<br>*11 Heated oxygen sensor (rear) | • Power supply<br>• Vehicle speed sensor<br>• A/C switch<br>• Park/Neutral position switch<br>• Power steering pressure switch<br>• Ignition switch-ST<br>• Ignition switch-IG | ⇨ Engine control module ⇨ | ★1 Injector<br>★2 Idle air control motor<br>★3 Evaporative emission purge solenoid<br>★4 EGR solenoid<br>• Fuel pump relay<br>• Multiport fuel injection (MFI) relay<br>• A/C compressor clutch relay<br>• Check engine/Malfunction indicator lamp<br>• Diagnostic output<br>• Ignition coil, Ignition power transistor |

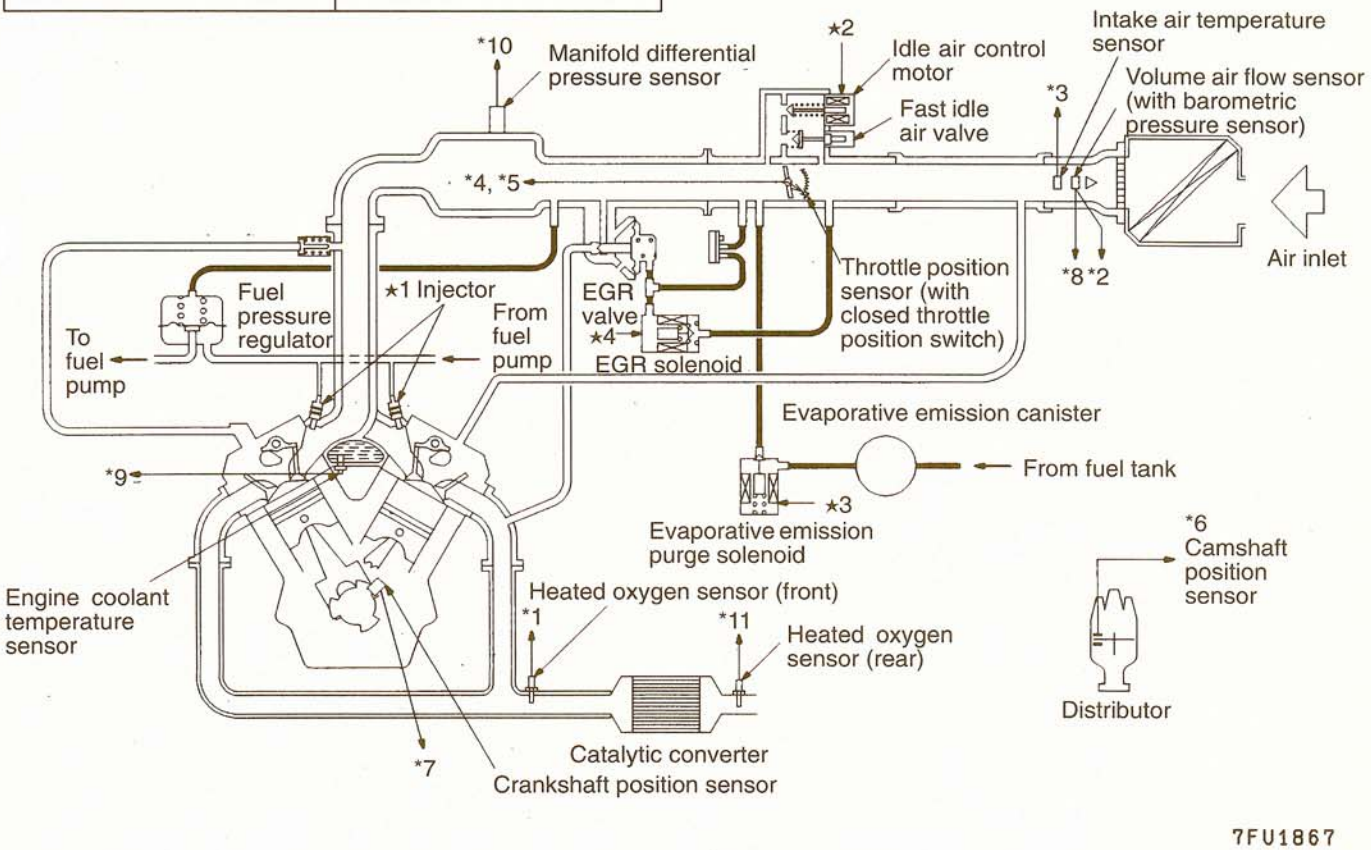


7FU1867

TSB Revision

## <SOHC-24 valve engine – Federal>

| | | | |
|---|---|---|---|
| *1 Heated oxygen sensor (front)<br>*2 Volume air flow sensor<br>*3 Intake air temperature sensor<br>*4 Throttle position sensor<br>*5 Closed throttle position switch<br>*6 Camshaft position sensor<br>*7 Crankshaft position sensor<br>*8 Barometric pressure sensor<br>*9 Engine coolant temperature sensor<br>*10 Manifold differential pressure sensor<br>*11 Heated oxygen sensor (rear) | • Power supply<br>• Vehicle speed sensor<br>• A/C switch<br>• Park/Neutral position switch<br>• Power steering pressure switch<br>• Ignition switch-ST<br>• Ignition switch-IG | ⇨ Engine control module ⇨ | ★1 Injector<br>★2 Idle air control motor<br>★3 Evaporative emission purge solenoid<br>★4 EGR solenoid<br>• Fuel pump relay<br>• Multiport fuel injection (MFI) relay<br>• A/C compressor clutch relay<br>• Check engine/Malfunction indicator lamp<br>• Diagnostic output<br>• Ignition coil, Ignition power transistor |

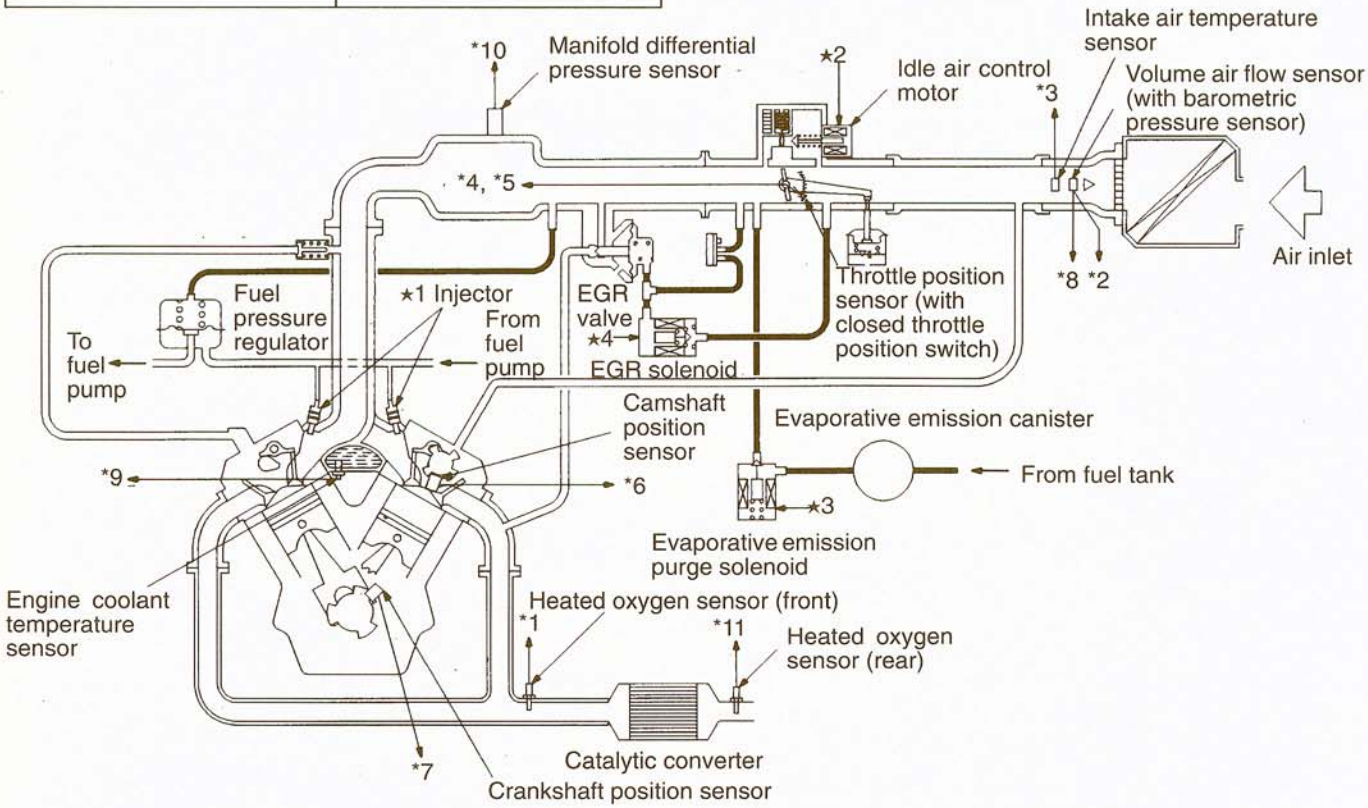


7FU1868

TSB Revision

## <SOHC-24 valve engine – California>

| | | | |
|---|---|---|---|
| *1 Left bank heated oxygen sensor (front)<br>*2 Volume air flow sensor<br>*3 Intake air temperature sensor<br>*4 Throttle position sensor<br>*5 Closed throttle position switch<br>*6 Camshaft position sensor<br>*7 Crankshaft position sensor<br>*8 Barometric pressure sensor<br>*9 Engine coolant temperature sensor<br>*10 Left bank heated oxygen sensor (rear)<br>*11 Right bank heated oxygen sensor (front)<br>*12 Right bank heated oxygen sensor (rear)<br>*13 Fuel tank differential pressure sensor | • Power supply<br>• Vehicle speed sensor<br>• A/C switch<br>• Park/Neutral position switch<br>• Power steering pressure switch<br>• Ignition switch-ST<br>• Ignition switch-IG | ⇨ Engine control module ⇨ | ★1 Injector<br>★2 Idle air control motor<br>★3 Evaporative emission purge solenoid No. 1<br>★4 Evaporative emission purge solenoid No. 2<br>★5 Evaporative emission ventilation solenoid | • Fuel pump relay<br>• Multiport fuel injection (MFI) relay<br>• A/C compressor clutch relay<br>• Check engine/Malfunction indicator lamp<br>• Diagnostic output<br>• Ignition coil, Ignition power transistor |

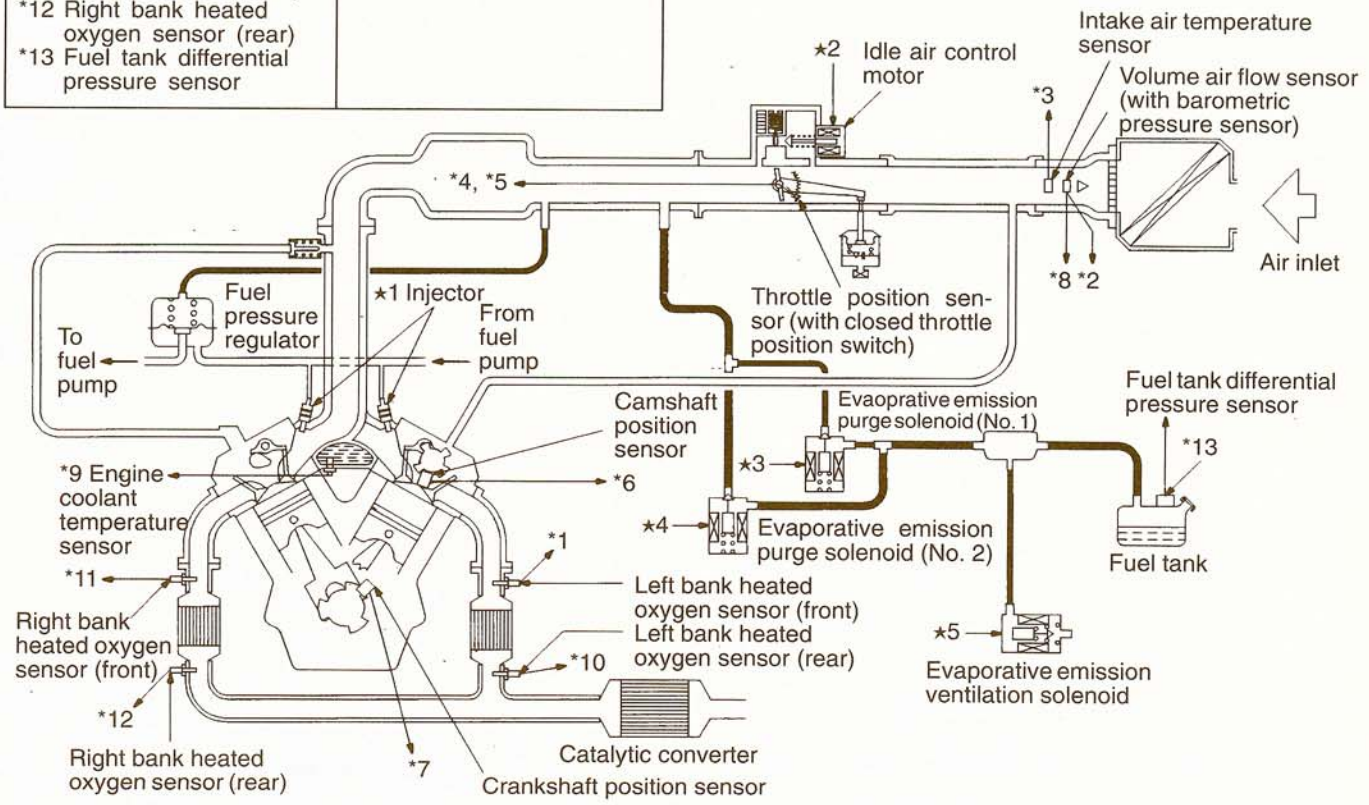


7FU1869

<DOHC>

| | | | |
|---|---|---|---|
| *1 Heated oxygen sensor (front)<br>*2 Volume air flow sensor<br>*3 Intake air temperature sensor<br>*4 Throttle position sensor<br>*5 Closed throttle position switch<br>*6 Camshaft position sensor<br>*7 Crankshaft position sensor<br>*8 Barometric pressure sensor<br>*9 Engine coolant temperature sensor<br>*10 Manifold differential pressure sensor<br>*11 Heated oxygen sensor (rear) | • Power supply<br>• Vehicle speed sensor<br>• A/C switch<br>• Park/Neutral position switch<br>• Power steering pressure switch<br>• Ignition switch-ST<br>• Ignition switch-IG | ⇨ Engine control module ⇨ | ★1 Injector<br>★2 Idle air control motor<br>★3 Evaporative emission purge solenoid<br>★4 EGR solenoid<br>★5 Variable induction control solenoid<br>• Fuel pump relay<br>• Multiport fuel injection (MFI) relay<br>• A/C compressor clutch relay<br>• Check engine/Malfunction indicator lamp<br>• Diagnostic output<br>• Ignition coil, Ignition power transistor |

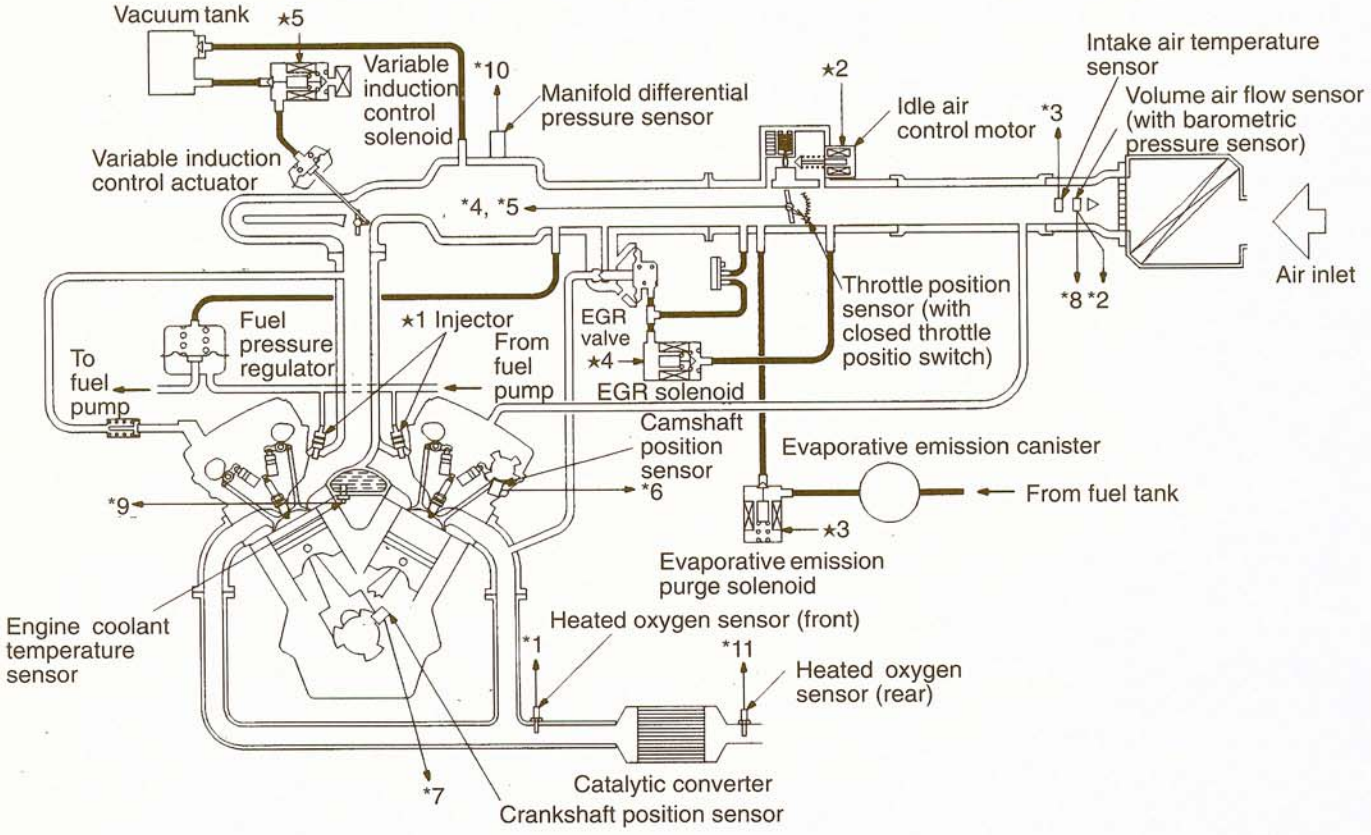


7FU1870

TSB Revision

## GENERAL SPECIFICATIONS

### <SOHC>

| ems | | | Specifications |
|---|---|---|---|
| Throttle body | Throttle bore mm (in.) | 12 valve engine | 54 (2.13) |
| | | 24 valve engine | 60 (2.36) |
| | Throttle position sensor | | Variable resistor type |
| | Idle air control motor | | Stepper motor type (Stepper motor type by-pass air control system) |
| | Closed throttle position switch | | Rotary contact type, within throttle position sensor |
| ECM | Identification model No. | 12 valve engine | E2T37487 |
| | | 24 valve engine – Federal | E2T37489 |
| | | 24 valve engine – California | E2T37488 |
| Sensors | Volume air flow sensor | | Karman vortex type |
| | Barometric pressure sensor | | Semiconductor type |
| | Intake air temperature sensor | | Thermistor type |
| | Engine coolant temperature sensor | | Thermistor type |
| | Heated oxygen sensor | | Zirconia type |
| | Vehicle speed sensor | | Reed switch type |
| | Park/Neutral position switch <A/T> | | Contact switch type |
| | Camshaft position sensor | | Hall element type |
| | Crankshaft position sensor | | Hall element type |
| | Power steering pressure switch | | Contact switch type |
| Actuators | Multiport fuel injection (MFI) relay | | Contact switch type |
| | Injector type and number | | Electromagnetic type, 6 |
| | Injector identification mark | 12 valve engine | B210H |
| | | 24 valve engine | DDH210 |
| | EGR solenoid | | Duty cycle type solenoid valve |
| | Evaporative emission purge solenoid (No. 1) | | Duty cycle type solenoid valve |
| | Evaporative emission purge solenoid No. 2 <California> | | Duty cycle type solenoid valve |
| Fuel pressure regulator | Regulator pressure kPa (psi) | | 335 (47.6) |

**<DOHC>**

| Items | | Specifications |
|---|---|---|
| Throttle body | Throttle bore mm (in.) | 60 (2.36) |
| | Throttle position sensor | Variable resistor type |
| | Idle air control motor | Stepper motor type (Stepper motor type by-pass air control system) |
| | Closed throttle position switch | Rotary contact type, within throttle position sensor |
| ECM | Identification model No. | E2T39984 |
| Sensors | Volume air flow sensor | Karman vortex type |
| | Barometric pressure sensor | Semiconductor type |
| | Intake air temperature sensor | Thermistor type |
| | Engine coolant temperature sensor | Thermistor type |
| | Heated oxygen sensor | Zirconia type |
| | Vehicle speed sensor | Reed switch type |
| | Park/Neutral position switch <A/T> | Contact switch type |
| | Knock sensor | Piezoelectric type |
| | Camshaft position sensor | Hall element type |
| | Crankshaft position sensor | Hall element type |
| | Power steering pressure switch | Contact switch type |
| Actuators | Multiport fuel injection (MFI) relay | Contact switch type |
| | Injector type and number | Electromagnetic type, 6 |
| | Injector identification mark | SDH240 |
| | EGR solenoid | Duty cycle type solenoid valve |
| | Evaporative emission purge solenoid | Duty cycle type solenoid valve |
| | Variable induction control solenoid | ON/OFF type solenoid valve |
| Fuel pressure regulator | Regulator pressure kPa (psi) | 335 (47.6) |

## SERVICE SPECIFICATIONS

13100030117

| 'tems | | Standard value |
|---|---|---|
| Basic ignition timing | | 5° BTDC ±3° at curb idle |
| Curb idle speed r/min | | 700±100 |
| Idle speed when air conditioning ON r/min | | 900 in neutral |
| Basic idle speed r/min | | 700±50 |
| Throttle position sensor adjusting voltage mV | | 400–1,000 |
| Throttle position sensor resistance kΩ | | 3.5–6.5 |
| Idle air control motor coil resistance Ω | | 28–33 [at 20°C (68 °F)] |
| Intake air temperature sensor resistance kΩ | 20°C (68 °F) | 2.7 |
| | 80°C (176 °F) | 0.4 |
| Engine coolant temperature sensor resistance kΩ | 20°C (68 °F) | 2.4 |
| | 80°C (176 °F) | 0.3 |
| Heated oxygen sensor output voltage V | | 0.6–1.0 |
| Fuel pressure kPa (psi) | Vacuum hose disconnection | 330–350 (47–50) at curb idle |
| | Vacuum hose connection | Approx. 270 (38) at curb idle |
| Injector coil resistance Ω | | 13–16 [at 20°C (68 °F)] |

## SEALANT

13100050106

| Items | Specified sealant |
|---|---|
| Engine coolant temperature sensor threaded portion | 3M Nut Locking Part No. 4171 or equivalent |

## SPECIAL TOOLS

13100060109

| Tool | Tool number and name | Supersession | Application |
|---|---|---|---|
|  | MB991502<br>Scan tool (MUT-II) | MB991502 | • Reading of diagnostic trouble codes<br>• MFI system check |
|  | ROM pack | | |

| Tool | Tool number and name | Supersession | Application |
|---|---|---|---|
| 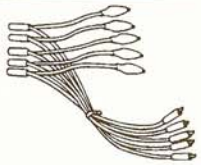 | MB991348<br>Test harness set | Tool not available | • Adjustment of throttle position sensor<br>• Inspection using an analyzer |
| 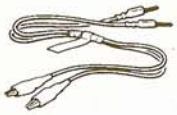 | MB991529<br>Reading of diagnostic trouble codes | Tool not necessary if scan tool (MUT-II) is available | • Reading of diagnostic trouble codes<br>• Basic idle speed adjustment |
|  | MD998464<br>Test harness (4 pin, square) | MD998464-01 | • Heated oxygen sensor check |
| 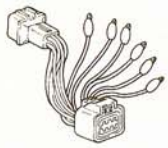 | MD998463<br>Test harness (6 pin, square) | MD998463-01 | • Idle air control motor check<br>• Inspection using an analyzer |
| 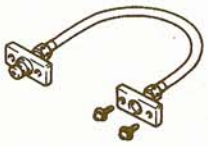 | MD998753<br>Extension hose | MIT210196 | SOHC-12 valve engine, DOHC<br>• Fuel pressure measurement |
|  | MD998700<br>Hose adapter | MIT215144 | |
|  | MD998709<br>Adapter hose | MIT210196 | SOHC-24 valve engine<br>• Fuel pressure measurement |
|  | MD998742<br>Fuel pressure test adapter | MB998742-01 | |

# TROUBLESHOOTING

13110020016

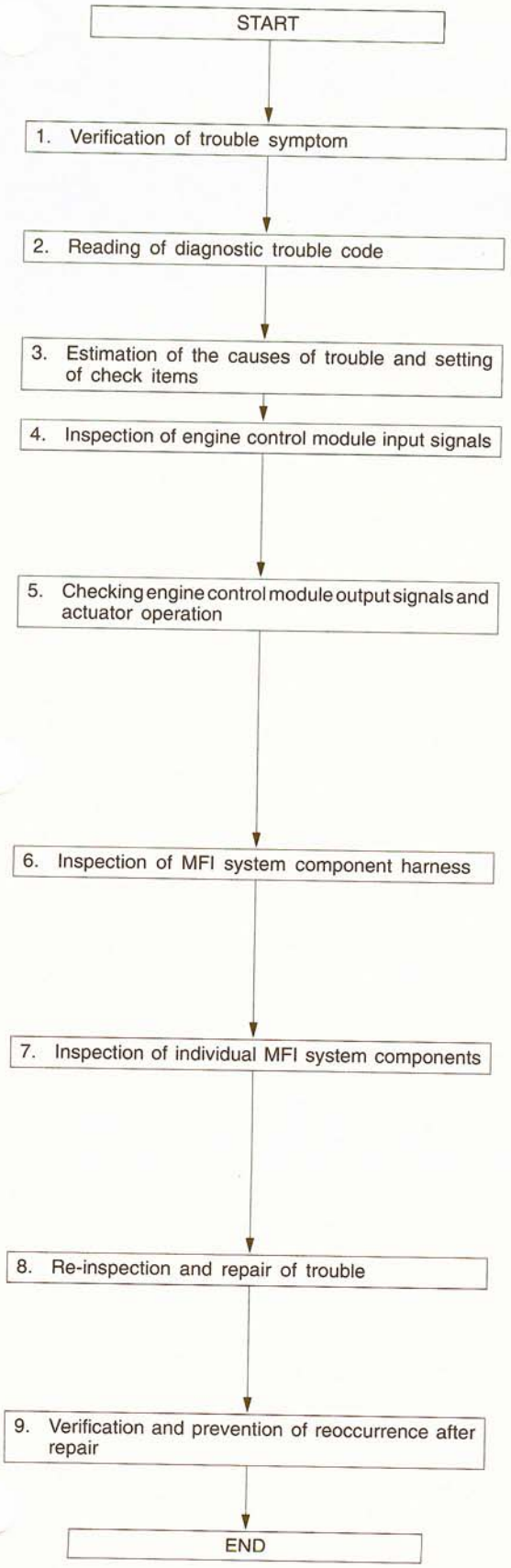


## EXPLANATION OF TROUBLESHOOTING PROCEDURES

Effective troubleshooting procedures for MFI system problems are given below.

1. Verification of trouble symptom
   - Reproduce the trouble symptoms and verify the characteristics of the trouble and the conditions (engine condition, driving conditions, etc.) under which they are produced.
2. Reading of diagnostic trouble code
   - Take a reading of the diagnostic trouble codes and if a diagnostic trouble code is output, locate and correct the trouble while referring to the DIAGNOSTIC CHART.
3. Estimation of the causes of trouble and setting of check items
   - Referring to the Check Chart, verify the check items and checking order for the trouble symptom.
4. Checking engine control module input and output signals
   - Using a scan tool or analyzer, check the input and output signals of the engine control module.
   - If the input and output signals are normal, the sensor input/actuator control is judged as normal. Then, check the input and output signals of the next check item.
5. Checking engine control module output signals and actuator operation
   - Use the scan tool to check the signals output from the engine control module. Also, drive the actuator using the actuator test function to check the actuator operation.
   - Use an oscilloscope to check the signals output from the engine control module.
   - If the signals output from the engine control module and the operation of the actuator are normal, the actuator control is judged to be normal. Then, check the next check item.
6. Inspection of MFI system component harness
   - If the engine control module input/output signals are abnormal, check the MFI system component body harness and repair as necessary.
   - After repairing, check the engine control module input/output signals again. If they are normal, proceed to check the input/output signals of the next check item.
7. Inspection of individual MFI system components
   - If the body harness is normal but the engine control module input/output signals are abnormal, check individual MFI system components and repair or replace as necessary.
   - After repairing or replacement, check the engine control module input/output signals again. If they are normal, proceed to check the input/output signals of the next check item.
8. Re-inspection and repair of trouble
   - If the harness inspection and individual component inspection results are normal but the engine control module input/output signals are abnormal, re-examine the causes of the trouble while referring to the troubleshooting hints and the checks and repairs included in other groups.
9. Verification and prevention of reoccurrence after repair
   - Carry out tests to see if the same problems occur again and make sure that the same problems will not be repeated.
   - Eliminate the causes of the trouble to prevent its reoccurrence.

**TSB Revision**

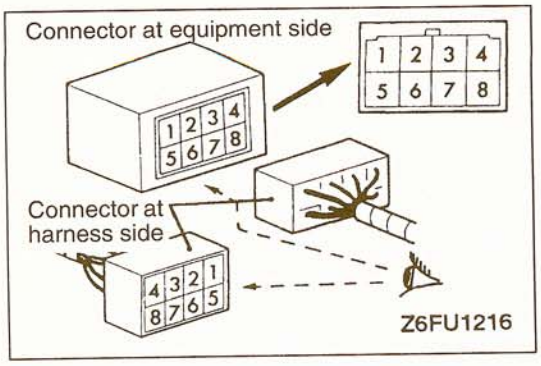


## EXPLANATION AND PRECAUTION RELATED TO HARNESS CHECKING

13110030019

- Connector symbols are described as seen from th terminal end for the connector.
- The abbreviation "B+" used for the normal judgment value when checking the voltage is the abbreviation for battery positive voltage.

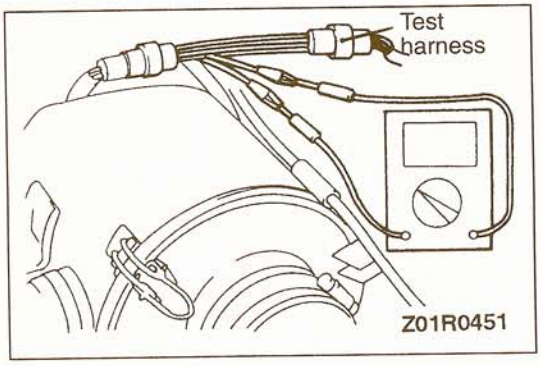


- Be sure to use the special tool (test harness) when, for a waterproof connector, checking while the circuit is conductive. If probe is inserted from the harness side, the waterproof capability will be lowered, thereby causing/corrosion, so never do so.
- When a connector is disconnected in order to check terminal voltage, etc., never insert a probe if the terminal to be checked is a female pin, because the forceful insertion of a probe will cause improper or incomplete contact.

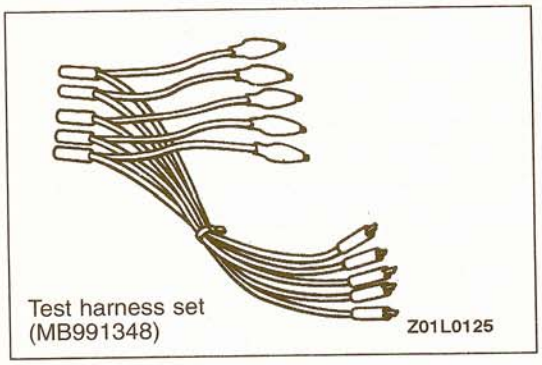


- Also, if there is no test harness that conforms to the connector, use the test harness set (MB991348) which can be directly connected between the terminals.

- When disconnecting the connector and inspecting the terminal voltage, etc., if the inspection terminal is a female pin, the special tool (inspection harness set: MB991223) should be used instead of inserting a probe.

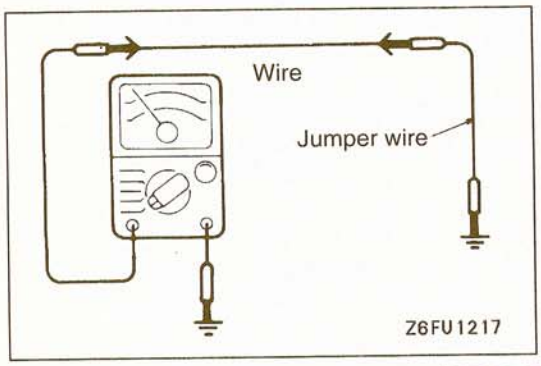


- When checking for damaged or disconnected wiring of a harness (open circuit) and if both ends of the harness are unconnected, use a jumper wire to ground one end of the harness, and then check for continuity between the other end and ground. By doing this, you can check for damaged or disconnected wiring, and, if there is no continuity, the harness should be repaired.
  However, when checking for a open circuit in the power supply line, check for continuity between both ends directly, without using a jumper wire to ground one end of the harness.

**TSB Revision**

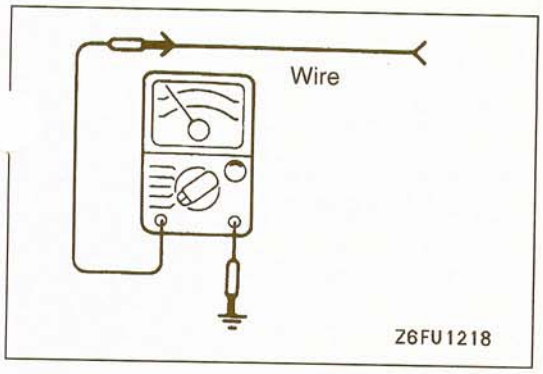


- When checking for a harness short-circuit (short-circuit to ground), open one end of the harness and then check for continuity between the other end and ground. If there is continuity, the harness is short-circuited to ground and should be repaired.

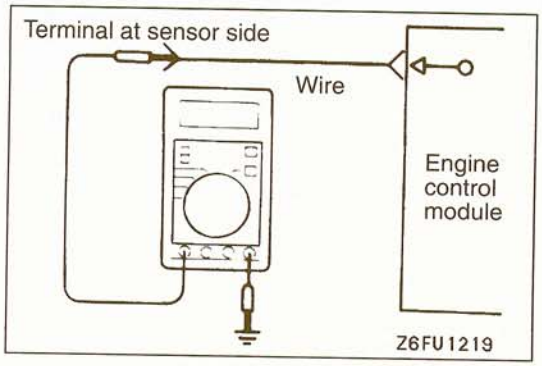


- If the voltage (power-supply voltage) supplied to a sensor is not normal, repair the harness. If the voltage to the sensor is still not normal after the harness has been repaired, replace the engine control module and check again.

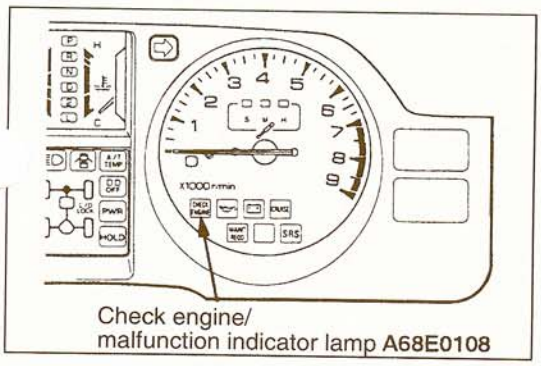


## CHECK ENGINE/MALFUNCTION INDICATOR LAMP

13110040029

Among the on-board diagnostic items, a check engine/malfunction indicator lamp illuminates to notify the driver of the emission control items when an irregularity is detected. However, when an irregular signal returns to normal and the engine control module judges that it has returned to normal, the check engine/malfunction indicator lamp switches off. Moreover, when the ignition switch is turned off, the lamp switches off. Even if the ignition switch is turned on again, the lamp does not illuminate until the irregularity is detected. Here, immediately after the ignition switch is turned on, the check engine/malfunction indicator lamp illuminates for 5 seconds to indicated that the lamp operates normally.

## Items Indicated by The Check Engine/Malfunction Indicator Lamp

| DTC No. | Items | DTC No. | Items |
|---|---|---|---|
| – | Engine control module (ECM) malfunction | P0302* | Cylinder 2 misfire detected |
| P0100 | Volume air flow circuit malfunction | P0303* | Cylinder 3 misfire detected |
| P0105 | Barometric pressure circuit malfunction | P0304* | Cylinder 4 misfire detected |
| P0110 | Intake air temperature circuit malfunction | P0305* | Cylinder 5 misfire detected |
| P0115 | Engine coolant temperature circuit malfunction | P0306* | Cylinder 6 misfire detected |
| P0120 | Throttle position circuit malfunction | P0335 | Crankshaft position sensor circuit malfunction |
| P0125* | Excessive time to enter closed loop fuel control | P0340 | Camshaft position sensor circuit malfunction |
| P0130 | $O_2$ sensor circuit malfunction (bank 1 sensor 1) | P0400 | Exhaust gas recirculation flow malfunction <SOHC–Federal, DOHC> |
| P0135 | $O_2$ sensor heater circuit malfunction (bank 1 sensor 1) | P0403 | Exhaust gas recirculation solenoid malfunction <SOHC–Federal, DOHC> |
| P0136 | $O_2$ sensor circuit malfunction (bank 1 sensor 2) | P0420 | Catalyst system efficiency below threshold (bank 1) <SOHC–Federal, DOHC> |
| P0141 | $O_2$ sensor heater circuit malfunction (bank 1 sensor 2) | P0421 | Warm up catalyst efficiency below threshold (bank 1) <SOHC–California> |
| P0150 | $O_2$ sensor circuit malfunction (bank 2 sensor 1) <SOHC–California> | P0431 | Warm up catalyst efficiency below threshold (bank 2) <SOHC–California> |
| P0155 | $O_2$ sensor heater circuit malfunction (bank 2 sensor 1) <SOHC–California> | P0440 | Evaporative emission control system malfunction <SOHC–Federal , DOHC> |
| P0156 | $O_2$ sensor circuit malfunction (bank 2 sensor 2) <SOHC–California> | P0442 | Evaporative emission control system leak detected <SOHC–California> |
| P0161 | $O_2$ sensor heater circuit malfunction (bank 2 sensor 2) <SOHC–California> | P0443 | Evaporative emission control system purge control valve circuit malfunction |
| P0170 | Fuel trim malfunction (bank 1) | P0446 | Evaporative emission control system vent control malfunction <SOHC–California> |
| P0173 | Fuel trim malfunction (bank 2) <SOHC–California> | P0450 | Evaporative emission control system pressure sensor malfunction <SOHC–California> |
| P0201 | Injector circuit malfunction – cylinder 1 | P0505 | Idle control system malfunction |
| P0202 | Injector circuit malfunction – cylinder 2 | P0510 | Closed throttle position switch malfunction |
| P0203 | Injector circuit malfunction – cylinder 3 | P0705 | Transmission range sensor circuit malfunction (RPNDL Input) |
| P0204 | Injector circuit malfunction – cylinder 4 | P0710 | Transmission fluid temperature sensor circuit malfunction |
| P0205 | Injector circuit malfunction – cylinder 5 | P1400 | Manifold differential pressure sensor circuit malfunction <SOHC–Federal , DOHC> |
| P0206 | Injector circuit malfunction – cylinder 6 | P1443 | Evaporative emission control system purge control valve 2 circuit malfunction <SOHC–California> |
| P0300* | Random misfire detected | P1715 | PG assembly malfunction |
| P0301* | Cylinder 1 misfire detected | P1750 | Solenoid assembly malfunction |

**TSB Revision**

NOTE
1. After the Engine Control Module (ECM) detects a malfunction, the check engine/malfunction indicator lamp illuminates when the engine is next turned on and the same malfunction is re-detected.
   However, for items marked with a "*" , the check engine/malfunction indicator lamp illuminates on the first detection of the malfunction.
2. After the check engine/malfunction indicator lamp illuminates, it will be switched off under the following conditions.
   - When the ECM monitored the powertrain malfunction three times* and detected no malfunction.
     *: In this case, one time indicates from engine start to stop.
   - For misfiring or a fuel trim malfunction, when driving conditions (engine speed, engine coolant temperature, etc.) are similar to those when the malfunction was first recorded.

**Caution**
**If the check engine/malfunction indicator lamp illuminates because of a malfunction of the ECM, transmission between the scan tool and the ECM cannot occur. In this case, the diagnostic trouble code cannot be read.**

## ON-BOARD DIAGNOSTICS

13110050022

The engine control module monitors the input/output signals (some signals at all times and the others under specified conditions) of the engine control module.
When a malfunction has continued for a specified time or longer since the irregular signal is initially monitored, the engine control module judges that a malfunction has occurred.
After the ECM first detects a malfunction, a diagnostic trouble code is recorded when the engine is restarted and the same malfunction is re-detected. However, for items marked with a "*", a diagnostic trouble code is recorded on the first detection of the malfunction.
There are 52 diagnostic items, and the diagnostic results can be read out with a scan tool.
Moreover, since memorization of the diagnostic trouble codes is backed up directly by the battery, the diagnostic results are memorized even if the ignition key is turned off. The diagnostic trouble codes will, however, be erased when the battery terminal or the engine control module connector is disconnected.
In addition, the diagnostic trouble code can also be erased by turning the ignition switch to ON and sending the diagnostic trouble code erase signal from the scan tool to the engine control module.

**Caution**
**If the sensor connector is disconnected with the ignition switch turned on, the diagnostic trouble code is memorized. In this case, send the diagnostic trouble code erase signal to the engine control module in order to erase the diagnostic memory.**

The 52 diagnostic items are provided as follows, and if plural items are activated, they are all indicated sequentially from the smallest code number.

**Caution**
**The diagnostic trouble code of ignition timing adjustment signal is output whenever terminal for ignition timing adjustment is grounded. Therefore, it is not a malfunction that the code is output when adjusting ignition timing.**

The ECM records the diagnostic trouble code and the engine operating conditions at the time the malfunction was detected. These data are called "freeze frame" data.
This data indicates the engine operating condition from when nothing at all is detected to the initial detection of malfunction.
This data can be read by using the scan tool, and can then be used in simulation tests for troubleshooting. Data items are as follows.

| Data | Unit |
|---|---|
| Engine coolant temperature | °C |
| Engine speed | r/min |
| Vehicle speed | km/h |
| Long-term fuel compensation (Long-term fuel trim) | % |
| Short-term fuel compensation (Short-term fuel trim) | % |
| Fuel control condition | • Open loop<br>• Closed loop<br>• Open loop-drive condition<br>• Open loop-DTC set<br>• Closed loop-$O_2$ (rear) failed |
| Calculation load value | % |
| Diagnostic trouble code during data recording | – |

## OBD-II DRIVE CYCLE

All kinds of diagnostic trouble code can be monitored by carrying out a short drive in accordance with the following drive cycle pattern. In other words, doing such a drive allows to regenerate any kind of trouble which involves illuminating the check engine/malfunction indicator lamp and to check if the repair procedure has eliminated the trouble (the check engine/malfunction indicator lamp is no more illuminated).

NOTE:

1. For checking the following four systems for illumination of the check engine/malfunction indicator lamp, perform the driving up to the point B twice successively. Before beginning with the first drivin turn off the ignition switch for more than 10 seconds.
   - EGR system
   - Fuel trim
   - Evaporative emission control system
   - Evaporative emission control system leak detected <SOHC–California>
2. In case of the systems other than those four mentioned above, performing a drive up to the point A twice successively will suffice for determining if the check engine/malfunction indicator lamp illuminates or not. Before beginning with the first driving, turn off the ignition switch for more than 10 seconds.
3. Perform test drives under the following conditions:
   (1) On vehicles with automatic transmission, set selector lever in D range, overdrive switch ON, Power/Economy changeover switch in P range.
   (2) Acceleration: Keep the throttle in 1/4 – 3/4 opened conditions.
   (3) Deceleration: Lower the vehicle speed below 15 mph or the engine speed below 1000 r/min (without operating brake and clutch).
   (4) During cruising: Keep the throttle opening constant.
   (5) During stopping: Keep the throttle fully closed, A/C OFF and transmission in neutral.
   (6) Coolant temperature at starting: 10°C (50°F) or more <SOHC–Federal, DOHC>, 10 – 40°C (50 – 104°F) <SOHC–California>
   (7) Intake air temperature at starting: 40°C (104°F) or less
   (8) Intake air temperature during driving: 50°C (122°F) or less

## Drive cycle pattern

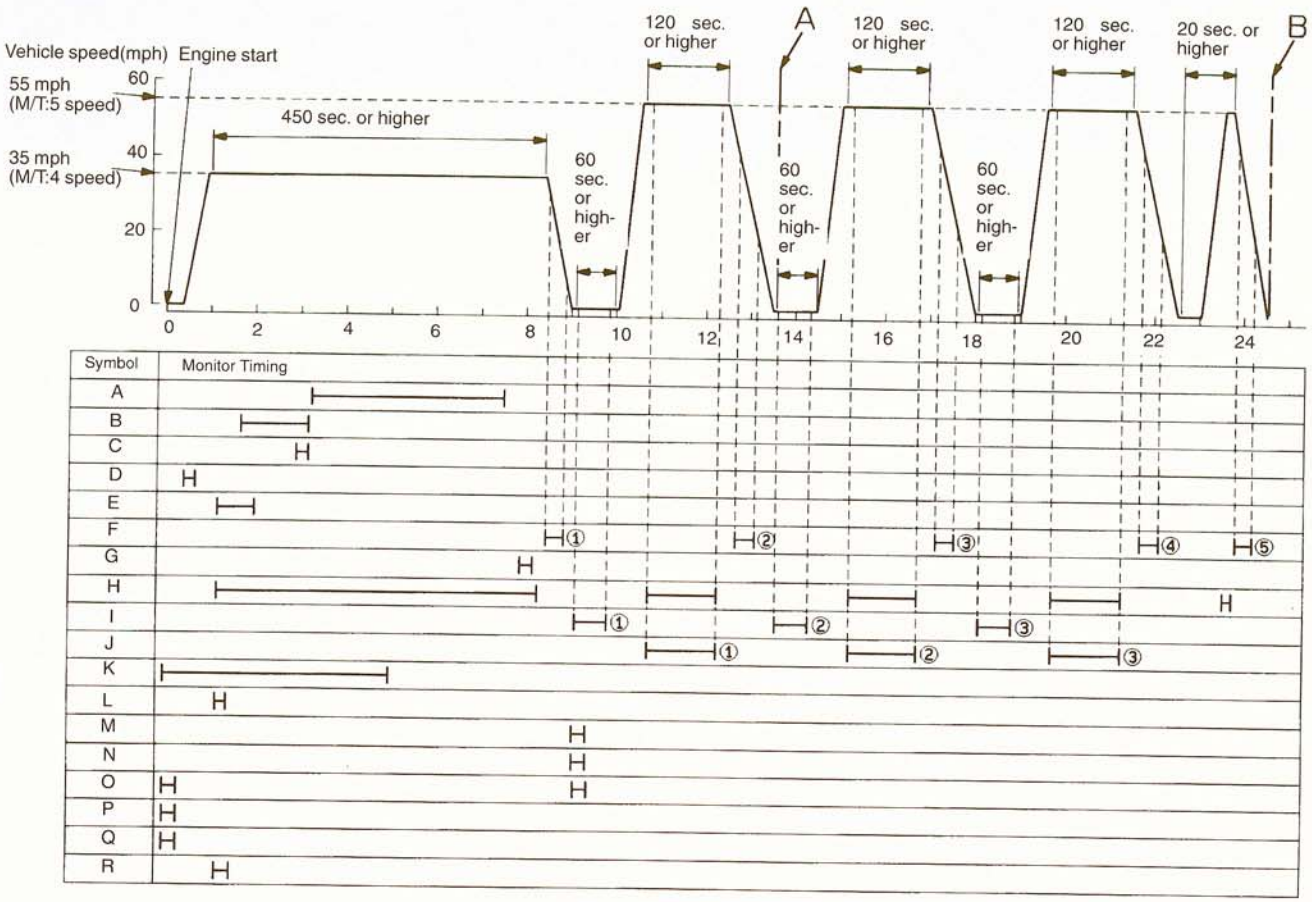


A: Catalytic converter
B: $O_2$ sensor
C: $O_2$ sensor circuit (open circuit/short circuit)
D: $O_2$ sensor heater circuit (open circuit/short circuit)
E: Misfire
F: EGR system
G: MDP sensor
H: Fuel trim
I: Evaporative emission control system
J: Evaporative emission control system leak detected <California>
K: ECT sensor
L: TP sensor, IAT sensor, BARO sensor
M: Idle control system
N: CTP switch
O: Injector circuit (open circuit)
P: Solenoid valve circuit (open circuit)
- EGR, EVAP purge

Q: CMP sensor, CKP sensor, VAF sensor
R: Excessive time to enter closed loop fuel control

**TSB Revision**

## DIAGNOSIS CHART (FAULT TREE)

13110060025

| DTC No. <General scan tool mode> | DTC No. <Scan tool (MUT-II) mode> | Diagnostic items | Check items (Remedy) | Memory |
|---|---|---|---|---|
| P0100 | P0100 | Volume Air Flow Circuit Malfunction | • Harness and connector (If harness and connector are normal, replace volume air flow sensor assembly.) | Retained |
| P0105 | P0105 | Barometric Pressure Circuit Malfunction | • Harness and connector (If harness and connector are normal, replace volume air flow sensor assembly.) | Retained |
| P0110 | P0110 | Intake Air Temperature circuit Malfunction | • Harness and connector<br>• Intake air temperature sensor | Retained |
| P0115 | P0115 | Engine Coolant Temperature Circuit Malfunction | • Harness and connector<br>• Engine coolant temperature sensor | Retained |
| P0120 | P0120 | Throttle position Circuit Malfunction | • Harness and connector<br>• Throttle position sensor<br>• Closed throttle position switch | Retained |
| P0125 | – | Excessive Time to Enter Closed Loop Fuel Control* | • $O_2$ sensor (front)<br>• $O_2$ sensor harness and connector<br>• Injector | Retained |
| P0130 | – | $O_2$ Sensor Circuit Malfunction (Bank 1 Sensor 1) | • Harness and connector (If harness and connector are normal, replace $O_2$ sensor front.) <Left bank: SOHC–California> | Retained |
| P0135 | – | $O_2$ Sensor Heater Circuit Malfunction (Bank 1 Sensor 1) | • Harness and connector<br>• $O_2$ Sensor (front) heater <Left bank: SOHC–California> | Retained |
| P0136 | – | $O_2$ Sensor Circuit Malfunction (Bank 1 Sensor 2) | • Harness and connector<br>• $O_2$ Sensor (rear) <Left bank: SOHC–California> | Retained |
| P0141 | – | $O_2$ Sensor Heater Circuit Malfunction (Bank 1 Sensor 2) | • Harness and connector<br>• $O_2$ Sensor (rear) heater <Left bank: SOHC–California> | Retained |
| P0150 | – | $O_2$ Sensor Circuit Malfunction (Bank 2 Sensor 1) <SOHC–California> | • Harness and connector (If harness and connector are normal, replace left bank $O_2$ sensor front.) | Retained |
| P0155 | – | $O_2$ Sensor Heater Circuit Malfunction (Bank 2 Sensor 1) <SOHC–California> | • Harness and connector<br>• Left bank $O_2$ Sensor (front) heater | Retained |

**TSB Revision**

| DTC No. <General scan tool mode> | DTC No. <Scan tool (MUT-II) mode> | Diagnostic items | Check items (Remedy) | Memory |
|---|---|---|---|---|
| P0156 | – | $O_2$ Sensor Circuit Malfunction (Bank 2 Sensor 2) <SOHC–California> | • Harness and connector<br>• Left bank $O_2$ Sensor (rear) | Retained |
| P0161 | – | $O_2$ Sensor Heater Circuit Malfunction (Bank 2 Sensor 2) <SOHC–California> | • Harness and connector<br>• Left bank $O_2$ Sensor (rear) heater | Retained |
| P0170 | – | Fuel Trim Malfunction (Bank 1) | • Volume air flow sensor output frequency<br>• Injector<br>• Fuel pressure<br>• Intake air leaks<br>• Engine coolant temperature sensor<br>• Intake air temperature sensor<br>• Barometric pressure sensor<br>• $O_2$ Sensor<br>• Exhaust manifold cracked | Retained |
| P0173 | – | Fuel Trim Malfunction (Bank 2) <SOHC–California> | | Retained |
| P0201 | P0201 | Injector Circuit Malfunction – Cylinder 1 | • Harness and connector<br>• Injector | Retained |
| P0202 | P0202 | Injector Circuit Malfunction – Cylinder 2 | | |
| P0203 | P0203 | Injector Circuit Malfunction – Cylinder 3 | | |
| P0204 | P0204 | Injector Circuit Malfunction – Cylinder 4 | | |
| P0205 | P0205 | Injector Circuit Malfunction – Cylinder 5 | | |
| P0206 | P0206 | Injector Circuit Malfunction – Cylinder 6 | | |
| P0300 | – | Random Misfire Detected* | • Ignition coil<br>• Ignition power transistor<br>• Spark plug<br>• Ignition circuit<br>• Injector<br>• $O_2$ Sensor<br>• Compression pressure<br>• Timing belt<br>• Crankshaft position sensor<br>• Air intake<br>• Fuel pressure<br>• Crankshaft position sensor circuit and connector | Retained |
| P0301 | – | Cylinder 1 Misfire Detected* | | |
| P0302 | – | Cylinder 2 Misfire Detected* | | |
| P0303 | – | Cylinder 3 Misfire Detected* | | |
| P0304 | – | Cylinder 4 Misfire Detected* | | |
| P0305 | | Cylinder 5 Misfire Detected* | | |
| P0306 | – | Cylinder 6 Misfire Detected* | | |
| P0325 | P0325 | Knock sensor 1 Circuit Malfunction <DOHC> | • Harness and connector (If harness and connector are normal, replace knock sensor.) | Retained |

**TSB Revision**

| DTC No. <General scan tool mode> | DTC No. <Scan tool (MUT-II) mode> | Diagnostic items | Check items (Remedy) | Memory |
|---|---|---|---|---|
| P0335 | P0335 | Crankshaft Position sensor Circuit Malfunction | • Harness and connector (If harness and connector are normal, replace crankshaft position sensor.) | Retained |
| P0340 | P0340 | Camshaft Position sensor Circuit Malfunction | • Harness and connector (If harness and connector are normal, replace camshaft position sensor.) | Retained |
| P0400 | – | Exhaust Gas Recirculation Flow Malfunction <SOHC–Federal, DOHC> | • Harness and connector<br>• EGR valve<br>• EGR solenoid<br>• EGR valve control vacuum<br>• Manifold differential pressure sensor | Retained |
| P0403 | – | Exhaust Gas Recirculation Solenoid Malfunction <SOHC–Federal, DOHC> | • Harness and connector<br>• EGR solenoid | Retained |
| P0420 | – | Catalyst System Efficiency Below Threshold (Bank 1) <SOHC–Federal, DOHC> | • Exhaust manifold (Replace the catalytic converter if there is no cracks, etc.) | Retained |
| P0421 | – | Warm Up Catalyst Efficiency Below Threshold (Bank 1) <SOHC–California> | • Exhaust manifold (Replace the catalytic converter if there is no cracks, etc.) | Retained |
| P0431 | – | Warm Up Catalyst Efficiency Below Threshold (Bank 2) <SOHC–California> | • Exhaust manifold (Replace the catalytic converter if there is no cracks, etc.) | Retained |
| P0440 | – | Evaporative Emission Control System Malfunction <SOHC–Federal, DOHC> | • Harness and connector<br>• Evaporative emission purge solenoid<br>• Purge control valve<br>• Vacuum hoses routing | Retained |
| P0442 | – | Evaporative Emission Control System Leak Detected <SOHC–California> | • Harness and connector<br>• Evaporative emission purge solenoid No.1, No.2<br>• Evaporative emission ventilation solenoid<br>• Vacuum hoses routing | Retained |
| P0443 | – | Evaporative Emission Control System Purge Control Valve Circuit Malfunction | • Harness and connector<br>• Evaporative emission purge solenoid (No.1) | Retained |
| P0446 | – | Evaporative Emission Control System Vent Control Malfunction <SOHC–California> | • Harness and connector<br>• Evaporative emission ventilation solenoid | Retained |
| P0450 | – | Evaporative Emission Control System Pressure Sensor Malfunction <SOHC–California> | • Harness and connector<br>• Fuel tank differential pressure sensor | Retained |

**TSB Revision**

| DTC No. <General scan tool mode> | DTC No. <Scan tool (MUT-II) mode> | Diagnostic items | Check items (Remedy) | Memory |
|---|---|---|---|---|
| P0500 | P0500 | Vehicle Speed Sensor Malfunction | • Harness and connector<br>• Vehicle speed sensor | Retained |
| P0505 | P0505 | Idle Control System Malfunction | • Harness and connector<br>• Idle air control motor | Retained |
| P0510 | – | Closed Throttle Position Switch Malfunction | • Harness and connector<br>• Closed throttle position switch | Retained |
| P0705 | – | Transmission Range Sensor Circuit Malfunction (RPNDL Input) | • Harness and connector<br>• Park/Neutral position switch | Retained |
| P0710 | – | Transmission Fluid Temperature Sensor Circuit Malfunction | • Harness and connector<br>• Transmission fluid temperature sensor | Retained |
| P1300 | P1300 | Ignition Timing Adjustment Circuit Malfunction | • Harness and connector | Retained |
| P1400 | – | Manifold Differential Pressure (MDP) Sensor Circuit Malfunction <SOHC–Federal, DOHC> | • Harness and connector<br>• MDP sensor | Retained |
| P1443 | – | Evaporative Emission Control System Purge Control Valve 2 Circuit Malfunction <SOHC–California> | • Harness and connector<br>• Evaporative emission purge solenoid No.2 | Retained |
| P1715 | – | PG Assembly Malfunction | • Harness and connector<br>• Pulse generator | Retained |
| P1750 | – | Solenoid Assembly Malfunction | • Harness and connector<br>• Converter clutch solenoid<br>• Shift control solenoid<br>• Pressure control solenoid | Retained |

NOTE
1. Do not replace the engine control module (ECM) until a thorough terminal check reveals there are no short/open circuits.
2. After the ECM detects a malfunction, a diagnostic trouble code is recorded when the engine is next started and the same malfunction is re-detected. However, for items marked with a "*", the diagnostic trouble code is recorded on the first detection of the malfunction.
3. $O_2$ : Heated oxygen sensor
4. Sensor 1: indicates sensors which are mounted closest to the engine.
5. Sensor 2: indicates sensors which are mounted next-closest to the engine.

## DIAGNOSTIC DETECTION LOGIC

13110070028

| DTC No. | Title | Probable causes |
|---|---|---|
| P0100 | Volume Air Flow Circuit Malfunction | |
| Background<br>• While the engine is running, the volume air flow sensor outputs a pulse signal which corresponds to the volume of air flow.<br>• The engine control module checks whether the frequency of the this signal output by the volume air flow sensor while the engine is running is at or above the set value.<br><br>Range of Check<br>• Engine speed is 500 r/min or more.<br><br>Set Conditions<br>• Sensor output frequency is 3 Hz or less for 4 seconds. | | • Volume air flow sensor failed.<br>• Open or shorted volume air sensor circuit, or loose connector.<br>• Engine control module failed. |

| DTC No. | Title | Probable causes |
|---|---|---|
| P0105 | Barometric Pressure Circuit Malfunction | |
| Background<br>• The barometric pressure sensor outputs a voltage which corresponds to the barometric pressure.<br>• The engine control module checks whether this voltage is within a specified range.<br><br>Range of Check<br>• Ignition switch : ON<br>• Excluding 60 seconds after the ignition switch is turned to ON or immediately after the engine starts.<br>• Battery voltage is 8 V more.<br><br>Set Conditions<br>• Sensor output voltage is 4.5 V or more (corresponding to a barometric pressure of 114 kPa (33.7 in.Hg) or more) for 4 seconds.<br>or<br>• Sensor output voltage is 0.2 V or less (corresponding to a barometric pressure of 5.33 kPa (1.57 in.Hg) or more) for 4 seconds. | | • Barometric pressure sensor failed.<br>• Open or shorted barometric pressure sensor circuit, or loose connector.<br>• Engine control module failed. |

TSB Revision

| DTC No. | Title | Probable causes |
|---|---|---|
| P0110 | Intake Air Temperature Circuit Malfunction | |
| Background<br>• The intake air temperature sensor converts the intake air temperature to a voltage and outputs it.<br>• The engine control module checks whether the voltage is within a specified range.<br><br>Range of Check<br>• Ignition switch : ON<br>• Excluding 60 seconds after the ignition switch is turned to ON or immediately after the engine starts.<br><br>Set Conditions<br>• Sensor output voltage is 4.6 V or more (corresponding to an intake air temperature of –45°C (–49°F) or less) for 4 seconds.<br>or<br>• Sensor output voltage is 0.2 V or less (corresponding to an intake air temperature of 125°C (257°F) or more) for 4 seconds. | | • Intake air temperature sensor failed.<br>• Open or shorted intake air temperature sensor circuit, or loose connector.<br>• Engine control module failed. |

| DTC No. | Title | Probable causes |
|---|---|---|
| P0115 | Engine Coolant Temperature Circuit Malfunction | |
| Background<br>• The engine coolant temperature sensor converts the engine coolant temperature to a voltage and outputs it.<br>• The engine control module checks whether the voltage is within a specified range. In addition, it checks the engine coolant temperature (signal) does not drop while the engine is warming up.<br><br>Range of Check, Set Conditions<br>Range of Check<br>• Ignition switch : ON<br>• Excluding 60 seconds after the ignition switch is turned to ON or immediately after the engine starts.<br><br>Set Conditions<br>• Sensor output voltage is 4.6 V or more (corresponding to an engine coolant temperature of –45°C (–49°F) or less) for 4 seconds.<br>or<br>• Sensor output voltage is 0.1 V or less (corresponding to an engine coolant temperature of 140°C (284°F) or more) for 4 seconds.<br><br>Range of Check<br>• Ignition switch : ON<br>• Engine speed is approx. 50 r/min or more.<br><br>Set Conditions<br>• The sensor output voltage increases from 1.6 V or less (corresponding to an engine coolant temperature of 40°C (104°F) or more) to 1.6 V or more (corresponding to an engine coolant temperature of 40°C (104°F) or less).<br>• After this, the sensor output voltage is 1.6 V or more for 5 minutes.<br><br>Range of Check<br>• The sensor output voltage increases from 1.6 V or less (corresponding to an engine coolant temperature of 40°C (104°F) or more) to 1.6 V or more (corresponding to an engine coolant temperature of 40°C (104°F) or less).<br>• Engine coolant temperature is 20°C (68°F) or more when the engine is started.<br>• Intake air temperature is 20°C (68°F) or more when the engine is started.<br><br>Set Conditions<br>• The engine coolant temperature takes 5 minutes or more to rise to approximately 50°C (122°F) after the engine is started. | | • Engine coolant temperature sensor failed.<br>• Open or shorted engine coolant temperature sensor circuit, or loose connector.<br>• Engine control module failed. |

TSB Revision

| DTC No. | Title | Probable causes |
|---|---|---|
| P0120 | Throttle Position Circuit Malfunction | • Throttle position sensor failed or maladjusted.<br>• Open or shorted throttle position sensor circuit, or loose connector.<br>• Closed throttle position switch ON malfunction.<br>• Closed throttle position switch signal wire shorted.<br>• Engine control module failed. |

Background
- The throttle position sensor outputs a voltage which corresponds to the throttle valve opening angle.
- The engine control module checks whether the voltage is within a specified range. In addition, it checks that the voltage output does not become too large while the engine is idling.

Range of Check, Set Conditions
Range of Check
- Ignition switch : ON
- Excluding 60 seconds after the ignition switch is turned to ON or immediately after the engine starts.

Set Conditions
- When the closed throttle position switch is ON, the sensor output voltage is 2 V or more for 4 seconds.

or
- The sensor output voltage is 0.2 V or less for 4 seconds.

Range of Check
- Ignition switch : ON
- Excluding 60 seconds after the ignition switch is turned to ON or immediately after the engine starts.
- Engine speed is approx. 500 – 3,000 r/min.
- During the low load drive

Set Conditions
- The sensor output voltage is 4.6 V or higher for 10 seconds.

| DTC No. | Title | Probable causes |
|---|---|---|
| P0125 | Excessive Time to Enter Closed Loop Fuel Control | • Heated oxygen sensor failed,<br>• Injector failed.<br>• Engine control module failed. |

Background
- The MFI system reduces exhaust emissions by means of closed-loop fuel control.
- The engine control module checks the time taken until closed-loop fuel control commences.

Range of Check, Set Conditions
- Even though the specified length of time (approximately 30 seconds) has passed since the conditions * were met following starting of the engine, the MFI system does not enter closed-loop fuel control.

*: The conditions are an engine coolant temperature of at least 80°C (176°F), an intake air temperature of 20 – 50°C (68 – 122°F), an engine speed of 1,900 – 2,200 r/min, etc.

TSB Revision

| DTC No. | Title | Probable causes |
|---|---|---|
| P0130 | Oxygen Sensor Circuit Malfunction (Bank 1 Sensor 1) | |
| Background<br>• When the oxygen sensor begins to deteriorate,the oxygen sensor signal response becomes poor.<br>• The engine control module forcibly varies the air/fuel mixture to make it leaner and richer, and checks the response speed of the oxygen sensor. In addition, the engine control module also checks for an open circuit in the oxygen sensor output line.<br><br>Range of Check, Set Conditions<br>• The response of the oxygen sensor signal is slow when the amount of fuel injected is increased or decreased by an override during closed-loop control of the air/fuel ratio.The oxygen sensor output line is open-circuit. | | • Heated oxygen sensor deteriorated.<br>• Open circuit in oxygen sensor output line.<br>• Engine control module failed. |

| DTC No. | Title | Probable causes |
|---|---|---|
| P0135 | Oxygen Sensor Heater Circuit Malfunction (Bank 1 Sensor 1) | |
| Background<br>• The engine control module checks whether the heater current is within a specified range when the heater is energized.<br><br>Range of Check, Set Conditions<br>• The oxygen sensor heater current is either lower than several dozen milliamperes or higher than several amperes. | | • Open or shorted oxygen sensor heater circuit.<br>• Open circuit in oxygen sensor heater.<br>• Engine control module failed. |

| DTC No. | Title | Probable causes |
|---|---|---|
| P0136 | Oxygen Sensor Circuit Malfunction (Bank 1 Sensor 2) | |
| Background<br>• The engine control module checks for an open circuit in the heated oxygen sensor output line.<br><br>Range of Check, Set Conditions<br>• The heated oxygen sensor output line is open-circuit. | | • Heated oxygen sensor failed.<br>• Engine control module failed.<br>• Open circuit in heated oxygen sensor output line. |

| DTC No. | Title | Probable causes |
|---|---|---|
| P0141 | Oxygen Sensor Heater Circuit Malfunction (Bank 1 Sensor 2) | |
| Background<br>• The engine control module checks whether the heater current is within a specified range when the heater is energized.<br><br>Range of Check, Set Conditions<br>• The oxygen sensor heater current is either lower than several dozen milliamperes or higher than several amperes. | | • Open shorted oxygen sensor heater circuit.<br>• Open circuit in oxygen sensor heater.<br>• Engine control module failed. |

| DTC No. | Title | Probable causes |
|---|---|---|
| P0150 | Oxygen Sensor Circuit Malfunction (Bank 2 Sensor 1) <SOHC–California> | • Heated oxygen sensor deteriorated.<br>• Open circuit in oxygen sensor output line.<br>• Engine control module failed. |

Background
- When the oxygen sensor begins to deteriorate,the oxygen sensor signal response becomes poor.
- The engine control module forcibly varies the air/fuel mixture to make it leaner and richer, and checks the response speed of the oxygen sensor.
  In addition, the engine control module also checks for an open circuit in the oxygen sensor output line.

Range of Check, Set Conditions
- The response of the oxygen sensor signal is slow when the amount of fuel injected is increased or decreased by an override during closed-loop control of the air/fuel ratio.The oxygen sensor output line is open-circuit.

| DTC No. | Title | Probable causes |
|---|---|---|
| P0155 | Oxygen Sensor Heater Circuit Malfunction (Bank 2 Sensor 1) <SOHC–California> | • Open or shorted oxygen sensor heater circuit.<br>• Open circuit in oxygen sensor heater.<br>• Engine control module failed. |

Background
- The engine control module checks whether the heater current is within a specified range when the heater is energized.

Range of Check, Set Conditions
- The oxygen sensor heater current is either lower than several dozen milliamperes or higher than several amperes.

| DTC No. | Title | Probable causes |
|---|---|---|
| P0156 | Oxygen Sensor Circuit Malfunction (Bank 2 Sensor 2) <SOHC–California> | • Heated oxygen sensor failed.<br>• Engine control module failed.<br>• Open circuit in heated oxygen sensor output line. |

Background
- The engine control module checks for an open circuit in the heated oxygen sensor output line.

Range of Check, Set Conditions
- The heated oxygen sensor output line is open-circuit

| DTC No. | Title | Probable causes |
|---|---|---|
| P0161 | Oxygen Sensor Heater Circuit Malfunction (Bank 2 Sensor 2) <SOHC–California> | • Open shorted oxygen sensor heater circuit.<br>• Open circuit in oxygen sensor heater.<br>• Engine control module failed. |

Background
- The engine control module checks whether the heater current is within a specified range when the heater is energized.

Range of Check, Set Conditions
- The oxygen sensor heater current is either lower than several dozen milliamperes or higher than several amperes.

TSB Revision

| DTC No. | Title | Probable causes |
|---|---|---|
| P0170 | Fuel Trim Malfunction (Bank 1) | |
| Background<br>• If a malfunction occurs in the fuel system, the fuel compensation value becomes too large or too small.<br>• The engine control module checks whether the fuel compensation value is within a specified range.<br><br>Range of Check, Set Conditions<br>• The fuel compensation value exceeds the specified range for 10 seconds during closed-loop control of the air/fuel ratio. | | • Volume air flow sensor failed.<br>• Injector failed.<br>• Incorrect fuel pressure.<br>• Air drawn in from gaps in gasket seals, etc.<br>• Heated oxygen sensor failed.<br>• Engine coolant temperature sensor failed.<br>• Engine control module failed.<br>• Intake air temperature sensor failed.<br>• Barometric pressure sensor failed. |

| DTC No. | Title | Probable causes |
|---|---|---|
| P0173 | Fuel Trim Malfunction (Bank 2) <SOHC–California> | |
| Background<br>• If a malfunction occurs in the fuel system, the fuel compensation value becomes too large or too small.<br>• The engine control module checks whether the fuel compensation value is within a specified range.<br><br>Range of Check, Set Conditions<br>• The fuel compensation value exceeds the specified range for 10 seconds during closed-loop control of the air/fuel ratio. | | • Volume air flow sensor failed.<br>• Injector failed.<br>• Incorrect fuel pressure.<br>• Air drawn in from gaps in gasket seals, etc.<br>• Heated oxygen sensor failed.<br>• Engine coolant temperature sensor failed.<br>• Engine control module failed.<br>• Intake air temperature sensor failed.<br>• Barometric pressure sensor failed. |

| DTC No. | Title | Probable causes |
|---|---|---|
| P0201-P0206 | Injector Circuit Malfunction Cylinder 1 – Cylinder 6 | |
| Background<br>• A surge voltage is generated when the injectors are driven and the current flowing to the injector coil is shut off.<br>• The engine control module checks this surge voltage.<br><br>Range of Check, Set Conditions<br>• Engine speed is approx. 50 – 1,000 r/min.<br>• The throttle position sensor output voltage is 1.15 V or less.<br>• Actuator test by scan tool is not carried out.<br><br>Set Conditions<br>• Surge voltage of injector coil is not detected for 4 seconds. | | • Injector failed.<br>• Open or shorted injector circuit, or loose connector.<br>• Engine control module failed. |

| DTC No. | Title | Probable causes |
|---|---|---|
| P0300 | Random Misfire Detected | |
| Background<br>• If a misfiring occurs while the engine is running, the engine speed suddenly changes.<br>• The engine control module checks for changes in the engine speed.<br><br>Range of Check, Set Conditions<br>• There are multiple cylinders for which the number of misfires for every 200 r/min of the engine exceeds the specified number.<br>• There are multiple cylinders for which the number of misfires for every 1,000 r/min of the engine exceeds the specified number. | | • Ignition system related part(s) failed.<br>• Poor crankshaft position sensor signal.<br>• Incorrect air/fuel ratio.<br>• Low compression pressure.<br>• Engine control module failed. |

| DTC No. | Title | Probable causes |
|---|---|---|
| P0301-P0306 | Cylinder 1 – Cylinder 6 Misfire Detected | |
| Background<br>• If a misfiring occurs while the engine is running, the engine speed suddenly changes.<br>• The engine control module checks for changes in the engine speed.<br><br>Range of Check, Set Conditions<br>• The number of misfires for every 200 r/min of the engine exceeds the specified number (single cylinder).<br>• The number of misfires for every 1,000 r/min of the engine exceeds the specified number (single cylinder). | | • Ignition system related part(s) failed.<br>• Engine control module failed. |

| DTC No. | Title | Probable causes |
|---|---|---|
| P0325 | Knock Sensor 1 Circuit Malfunction <DOHC> | |
| Background<br>• The knock sensor converts the vibration of the cylinder block into a voltage and outputs it. If there is a malfunction of the knock sensor, the voltage output will not change.<br>• The engine control module checks whether the voltage changes.<br><br>Range of Check<br>• Ignition switch : ON<br>• Excluding 60 seconds after the ignition switch is turned to ON or immediately after the engine starts.<br>• Engine speed is approx. 2,000 r/min or more.<br><br>Set Conditions<br>• The change in the knock sensor output voltage (knock sensor peak voltage at each 1/2 revolution of the crankshaft) is less than 0.06 V for 200 times in succession. | | • Knock sensor failed.<br>• Open or shorted knock sensor circuit, or loose connector.<br>• Engine control module failed. |

TSB Revision

| DTC No. | Title | Probable causes |
|---|---|---|
| P0335 | Crankshaft Position Sensor Circuit Malfunction | |
| Background<br>• When the engine is running, the crankshaft position sensor outputs a pulse signal.<br>• The engine control module checks whether the pulse signal is input while the engine is cranking.<br><br>Range of Check<br>• Engine is cranking.<br><br>Set Conditions<br>• Sensor output voltage does not change for 4 seconds (no pulse signal input). | | • Crankshaft position sensor failed.<br>• Open or shorted crankshaft position sensor circuit, or loose connector.<br>• Engine control module failed. |

| DTC No. | Title | Probable causes |
|---|---|---|
| P0340 | Camshaft Position Sensor Circuit Malfunction | |
| Background<br>• When the engine is running, the camshaft position sensor output a pulse signal.<br>• The engine control module checks whether the pulse signal is input.<br><br>Range of Check<br>• Ignition switch : ON<br>• Engine speed is approx. 50 r/min or more.<br><br>Set Conditions<br>• Sensor output voltage does not change for 4 seconds (no pulse signal input). | | • Camshaft position sensor failed.<br>• Open or shorted camshaft position sensor circuit, or loose connector.<br>• Engine control module failed. |

| DTC No. | Title | Probable causes |
|---|---|---|
| P0400 | Exhaust Gas Recirculation Flow Malfunction <SOHC–Federal, DOHC> | |
| Background<br>• When the EGR solenoid switches from OFF to ON while the engine is running, EGR gas flows.<br>• The engine control module checks how the EGR gas flow signal changes.<br><br>Range of Check, Set Conditions<br>• The EGR gas flow signal changes little when the EGR solenoid switches from OFF to ON. | | • EGR valve does not open.<br>• EGR control vacuum is too low.<br>• EGR solenoid failed.<br>• Open or shorted EGR solenoid circuit, or loose connector.<br>• Manifold differential pressure sensor failed.<br>• Engine control module failed. |

| DTC No. | Title | Probable causes |
|---|---|---|
| P0403 | Exhaust Gas Recirculation Solenoid Malfunction <SOHC–Federal, DOHC> | |
| Background<br>• The engine control module checks current flows in the EGR solenoid drive circuit when the solenoid is ON and OFF.<br><br>Range of Check, Set Conditions<br>• No surge voltage is detected when the EGR solenoid is switched from ON to OFF. | | • EGR solenoid failed.<br>• Open or shorted evaporative EGR solenoid circuit, or loose connector.<br>• Engine control module failed. |

TSB Revision

| DTC No. | Title | Probable causes |
|---|---|---|
| P0420 | Catalyst System Efficiency Below Threshold (Bank 1) <SOHC–Federal, DOHC> | • Catalytic converter deteriorated.<br>• Engine control module failed. |
| Background<br>• The signal from the heated oxygen sensor which follows the catalytic converter differs from that which precedes the catalytic converter. That is because the catalytic converter purifies exhaust gas. When the catalytic converter has deteriorated, the signal from the heated oxygen sensor which follows the catalytic converter becomes similar to that which precedes the catalytic converter.<br>• The engine control module checks the outputs of the heated oxygen sensor signals.<br><br>Range of Check, Set Conditions<br>• The relation between the signals from the heated oxygen sensors preceding (engine side) and following the catalytic converter meets specified condition. | | |

| DTC No. | Title | Probable causes |
|---|---|---|
| P0421 | Warm Up Catalyst Efficiency Below Threshold (Bank 1) <SOHC–California> | • Catalytic converter deteriorated.<br>• Engine control module failed. |
| Background<br>• The signal from the heated oxygen sensor which follows the catalytic converter differs from that which precedes the catalytic converter. That is because the catalytic converter purifies exhaust gas. When the catalytic converter has deteriorated, the signal from the heated oxygen sensor which follows the catalytic converter becomes similar to that which precedes the catalytic converter.<br>• The engine control module checks the outputs of the heated oxygen sensor signals.<br><br>Range of Check, Set Conditions<br>• The relation between the signals from the heated oxygen sensors preceding (engine side) and following the catalytic converter meets specified condition. | | |

| DTC No. | Title | Probable causes |
|---|---|---|
| P0431 | Warm Up Catalyst Efficiency Below Threshold (Bank 2) <SOHC–California> | • Catalytic converter deteriorated.<br>• Engine control module failed. |
| Background<br>• The signal from the heated oxygen sensor which follows the catalytic converter differs from that which precedes the catalytic converter. That is because the catalytic converter purifies exhaust gas. When the catalytic converter has deteriorated, the signal from the heated oxygen sensor which follows the catalytic converter becomes similar to that which precedes the catalytic converter.<br>• The engine control module checks the outputs of the heated oxygen sensor signals.<br><br>Range of Check, Set Conditions<br>• The relation between the signals from the heated oxygen sensors preceding (engine side) and following the catalytic converter meets specified condition. | | |

| DTC No. | Title | Probable causes |
|---|---|---|
| P0440 | Evaporative Emission Control System Malfunction <SOHC–Federal, DOHC> | |
| Background<br>• The evaporative emission purge solenoid opens and closes while the engine is idling. Then the fuel compensation value changes according to whether the evaporative emission canister emits purge air or not.<br>• The engine control module checks for this changes.<br><br>Range of Check, Set Conditions<br>• When the evaporative emission purge solenoid opens and closes while the engine is idling the changes in the fuel compensation value is lower than the specified amounts. | | • Evaporative emission purge solenoid failed.<br>• Open or shorted evaporative emission purge solenoid circuit, or loose connector.<br>• Purge hose connection or routing is defective.<br>• Engine control module failed. |

| DTC No. | Title | Probable causes |
|---|---|---|
| P0442 | Evaporative Emission Control System Leak Detected <SOHC–California> | |
| Background<br>• The engine control module opens the purge line and makes the fuel tank in a vacuum state after closing the purge line and the pressure release port in the evaporative emission canister. Then it closes the purge line again and makes the purge line and fuel tank in a closed state. If the vacuum pressure drop is great (close to the atmospheric pressure) after the closure in a specified time, the engine control module will judge that the leak in the fuel tank, purge line or vapor line is occurring.<br><br>Range of Check, Set Conditions<br>• During the normal speed drive, when the evaporative emission control system leak monitoring is performed, the great amount of leak was detected. | | • Improper tightening of the fuel tank filler tube cap.<br>• Fuel tank, purge line or vapor line seal failed.<br>• Evaporative emission purge solenoid No.1 failed.<br>• Evaporative emission purge solenoid No.2 failed.<br>• Evaporative emission ventilation solenoid failed.<br>• Fuel tank differential pressure sensor failed. |

| DTC No. | Title | Probable causes |
|---|---|---|
| P0443 | Evaporative Emission Control System Purge Control Valve Circuit Malfunction | |
| Background<br>• The engine control module checks whether current flows in the evaporative emission purge solenoid drive circuit when the solenoid is driven.<br><br>Range of Check, Set Conditions<br>• No surge voltage is detected when the evaporative emission purge solenoid is switched from ON to OFF. | | • Evaporative emission purge solenoid failed.<br>• Open or shorted evaporative emission purge solenoid circuit, or loose connector.<br>• Engine control module failed. |

| DTC No. | Title | Probable causes |
|---|---|---|
| P0446 | Evaporative Emission Control System Vent Control Malfunction <SOHC–California> | |
| Background<br>• The engine control module checks current flows in the evaporative emission vent solenoid drive circuit when the solenoid is ON and OFF.<br><br>Range of Check, Set Conditions<br>• No surge voltage is detected when the evaporative emission vent solenoid is switched from ON to OFF. | | • Evaporative emission vent solenoid failed.<br>• Open or shorted evaporative emission vent solenoid circuit, or loose connector.<br>• Engine control module failed. |

| DTC No. | Title | Probable causes |
|---|---|---|
| P0450 | Evaporative Emission Control System Pressure Sensor Malfunction <SOHC–California> | |
| Background<br>• The fuel tank differential pressure sensor outputs the voltage in proportion to the pressure (differential pressure against the barometric pressure) in the fuel tank.<br>• The engine control module checks whether the output voltage of the fuel tank differential pressure sensor is within the specified range.<br><br>Range of Check<br>• Intake air temperature: 5°C (41°F) or higher.<br>• Driving at a constant speed of 30 km/h (19 mph) or higher on a flat road.<br><br>Range of Check, Set Conditions<br>• The sensor output voltage is 4.5 V (approx. 40 mmHg higher than barometric pressure) or higher for 10 seconds even though the evaporative emission purge solenoid No.2 is driven at 100 % duty.<br>or<br>• Sensor output voltage is 0.5V (approx. 40 mmHg lower than barometric pressure) or lower for 10 seconds even though the evaporative emission purge solenoid No.1 and No.2 are closed. | | • Fuel tank differential pressure sensor failed.<br>• Open or shorted fuel tank differential pressure sensor circuit, or loose connector.<br>• Engine control module failed. |

| DTC No. | Title | Probable causes |
|---|---|---|
| P0500 | Vehicle Speed Sensor Malfunction | |
| Background<br>• The vehicle speed sensor outputs a pulse signal while the vehicle is driven.<br>• The engine control module checks whether the pulse signal is output.<br><br>Range of Check<br>• Ignition switch : ON<br>• Excluding 60 seconds after the ignition switch is turned to ON or immediately after the engine starts.<br>• Closed throttle position switch : OFF<br>• Engine speed is 3,000 r/min or more.<br>• Driving under high engine load conditions.<br><br>Set Conditions<br>• Sensor output voltage does not change for 4 seconds (no pulse signal input). | | • Vehicle speed sensor failed.<br>• Open or shorted vehicle speed sensor circuit, or loose connector.<br>• Engine control module failed. |

| DTC No. | Title | Probable causes |
|---|---|---|
| P0505 | Idle Control System Malfunction | |
| ackground<br>• If there is a malfunction of the IAC system, the actual engine speed will not be identical to the target engine speed.<br>• The engine control module checks the difference between the actual engine speed and the target engine speed.<br><br>Range of Check, Set Conditions<br>• After the engine has warmed up, the difference between the actual engine speed and the target engine speed exceeds the specified value. | | • Idle air control motor failed.<br>• Open or shorted idle air control motor circuit, or loose connector.<br>• Engine control module failed. |

| DTC No. | Title | Probable causes |
|---|---|---|
| P0510 | Closed Throttle Position Switch Malfunction | |
| Background<br>• While the engine is idling without pressing the accelerator pedal, "ON" signal can be input from the closed throttle position switch to the engine control module.<br>• The engine control module is used for checking the input signal during the engine idling.<br><br>Range of Check<br>• The vehicle is under stopping, however, the vehicle should have been driven at speed on or over 30 km/h (19 mph) at least one time before the vehicle is stopped.<br>• The engine speed is approx. 800 r/min or below.<br><br>Set Conditions<br>• "OFF" signal was input from the closed throttle position switch for 2 seconds. | | • Closed throttle position switch failed.<br>• Open or shorted closed throttle position switch circuit, or loose connector.<br>• Engine control module failed. |

| DTC No. | Title | Probable causes |
|---|---|---|
| P0705 | Transmission Range Sensor Circuit Malfunction (RPNDL Input) | |
| Background<br>• When a malfunction of the park/neutral position switch is detected, the transmission control module outputs a malfunction signal to the engine control module.<br><br>Range of Check, Set Conditions<br>• The malfunction signal of the park/neutral position switch is input to the engine control module. | | • Park/neutral position switch failed.<br>• Open or shorted park/neutral position switch circuit, or loose connector.<br>• Engine control module failed. |

| DTC No. | Title | Probable causes |
|---|---|---|
| P0710 | Transmission Fluid Temperature Sensor Circuit Malfunction | |
| Background<br>• When a malfunction of the fluid temperature sensor is detected, the transmission control module outputs a malfunction signal to the engine control module.<br><br>Range of Check, Set Conditions<br>• The malfunction signal of the fluid temperature sensor is input to the engine control module. | | • Fluid temperature sensor failed.<br>• Open or shorted fluid temperature sensor circuit, or loose connector.<br>• Engine control module failed. |

| DTC No. | Title | Probable causes |
|---|---|---|
| P1300 | Ignition Timing Adjustment Circuit Malfunction | |
| Background<br>• If there is a short circuit in the line between the engine control module and the ignition timing adjustment terminal, the line voltage will become low.<br>• The engine control module checks whether this occurs.<br><br>Range of Check<br>• Ignition switch : ON<br><br>Set Conditions<br>• The ignition timing adjustment signal wire is shorted to the ground. | | • Ignition timing adjustment signal wire circuit is shorted to the ground.<br>• Engine control module failed. |

| DTC No. | Title | Probable causes |
|---|---|---|
| P1400 | Manifold Differential Pressure Sensor Circuit Malfunction <SOHC–Federal, DOHC> | |
| Background<br>• The manifold differential pressure sensor outputs a voltage which corresponds to the negative pressure in the intake manifold.<br>• The engine control module checks whether the voltage output by the manifold differential pressure sensor is within a specified range.<br><br>Range of Check, Set Conditions<br>• After the engine has warmed up, it runs at low or medium load.<br>• The engine coolant temperature at the time of starting the engine is 18°C (65.4°F) or more.<br>• The sensor output voltage is 4.5 V or more for 4 seconds, or the sensor output voltage is 0.2 V or less for 4 seconds. | | • Manifold differential pressure sensor failed.<br>• Open or shorted manifold differential pressure sensor circuit, or loose connector.<br>• Engine control module failed. |

| DTC No. | Title | Probable causes |
|---|---|---|
| P1443 | Evaporative Emission Control System Purge Control Valve 2 Circuit Malfunction <SOHC–California> | |
| Background<br>• The engine control module checks whether current flows in the evaporative emission purge solenoid No.2 drive circuit when the solenoid is ON and OFF.<br><br>Range of Check, Set Conditions<br>• No surge voltage is detected when the evaporative emission purge solenoid No.2 is switched from ON to OFF. | | • Evaporative emission purge solenoid No.2 failed.<br>• Open or shorted evaporative emission purge solenoid No. 2 circuit, or loose connector.<br>• Engine control module failed. |

TSB Revision

| DTC No. | Title | Probable causes |
|---|---|---|
| P1715 | PG Assembly Malfunction | |
| Background<br>• The transmission control module monitors the pulse signals of the pulse generators "A" and "B".<br>• When the pulse generators "A" and "B" are failed, the transmission control module inputs the pulse generator failed signal to the engine control module.<br><br>Range of Check<br>• Engine speed is 500 r/min or more.<br>• Position of selector lever : Except "P" or "N"<br><br>Set Conditions<br>• The pulse generator failed signals were input from the transmission control module to the engine control module. | | • Pulse generator failed.<br>• Engine control module failed. |

| DTC No. | Title | Probable causes |
|---|---|---|
| P1750 | Solenoid Assembly Malfunction | |
| Background<br>• The transmission control module monitors the torque converter clutch solenoid, shift control solenoid and pressure control solenoid.<br>• When some one of these solenoids failed, the transmission control module inputs these failed signals to the engine control module.<br><br>Range of Check<br>• Engine speed is 500 r/min or more.<br>• Position of selector lever : Except "P" or "N"<br><br>Set Conditions<br>• The failed signals of the torque converter clutch solenoid, shift control solenoid or pressure control solenoid were input from the transmission control module to the engine control module. | | • Torque converter clutch solenoid failed.<br>• Shift control solenoid failed.<br>• Pressure control solenoid failed.<br>• Engine control module failed. |

## FAIL-SAFE/BACKUP FUNCTION QUICK REFERENCE TABLE

13110080021

When the main sensor malfunctions are detected by the on-board diagnostic, the vehicle is controlled by means of the pre-set control logic to maintain safe conditions for driving.

| Malfunctioning item | Control contents during malfunction |
|---|---|
| Volume air flow sensor | (1) Uses the throttle position sensor (TPS) signal and engine speed signal (crankshaft position sensor signal) to take readings of the basic injector drive time and basic ignition timing from the pre-set mapping.<br>(2) Fixes the idle air control motor in the appointed position so idle air control is not performed. |
| Intake air temperature sensor | Controls the intake air temperature to 25°C (77°F). |
| Throttle position sensor (TPS) | No increase in fuel injection amount during acceleration due to the throttle position sensor signal. |
| Engine coolant temperature sensor | Controls the engine coolant temperature to 80°C (176°F). (This control will be continued until the ignition switch is turned to OFF even though the sensor signal returns to normal.) |
| Camshaft position sensor | Injects fuel simultaneously into all cylinders. (However, when the No. 1 cylinder top dead center is not detected at all after the ignition switch is turned to ON.) |
| Barometric pressure sensor | Controls the barometric pressure to 101 kPa (30 in.Hg). |
| Knock sensor <DOHC> | Switches from ignition timing for premium gasoline to ignition timing for regular gasoline. |
| Ignition coil/ignition power transistor unit <DOHC> | Fuel is cut in the cylinder where the ignition signal is abnormal. |
| Heated oxygen sensor (front) | Air/fuel ratio closed loop control is not performed. |
| Heated oxygen sensor (rear) | The air/fuel ratio closed loop control will be made by using only the signal of the heated oxygen sensor (front) which is located at the front of catalytic converter. |
| Misfire detection | The ECM stops supplying fuel to the cylinder with the highest misfiring rate if a misfiring that could damage the catalytic converter is detected. |

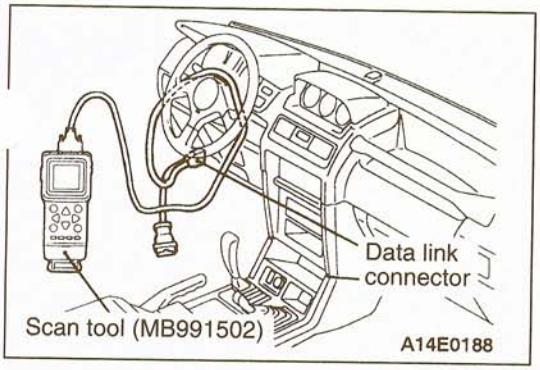


## READING OF DIAGNOSTIC TROUBLE CODES

13110090024

**Caution**

1. **When battery positive voltage is low, no detection of failure is possible. Be sure to check the battery for voltage and other conditions before starting the test.**
2. **Diagnostic items are erased if the battery or the engine control module connector is disconnected. Do not disconnect the battery before the diagnostic result is completely read.**
3. **Be sure to connect or disconnect the scan tool with the ignition switch turned off. If the scan tool is disconnected while the ignition switch is at the ON position, an ABS diagnostic trouble code may be stored and the ABS warning lamp may thus illuminate.**

(1) Connect the scan tool to the data link connector.
(2) Turn the ignition switch to ON.
(3) Take a reading of the diagnostic output.
(4) Repair the problem location while referring to the diagnostic chart.
(5) After turning the ignition switch once to OFF, turn it back to ON.
(6) Erase the diagnostic trouble code.
(7) Check again that the condition is normal.

## DIAGNOSIS BY DIAGNOSTIC TEST MODE II (INCREASED SENSITIVITY)

(1) Using the scan tool, changeover the diagnostic test mode of the engine control module to DIAGNOSTIC TEST MODE II. (INCREASED SENSITIVITY)
(2) Carry out a road test.
(3) Read the diagnostic trouble code by the same procedure as in "READING OF DIAGNOSTIC TROUBLE CODES" and repair the malfunctioning part.
(4) After turning the ignition switch once to OFF, turn it back to ON.

NOTE
Turning the ignition switch to OFF will cause the engine control module to changeover the diagnostic test module from the diagnostic test mode II to the diagnostic test mode I.

(5) Erase the diagnostic trouble code.

## CHECK CHART CLASSIFIED BY PROBLEM SYMPTOMS

13110100024

### <SOHC-12 valve engine>

| Items | Starting | Starting | Idling stability | Idling stability | Idling stability | Reference page |
|---|---|---|---|---|---|---|
| | Will not start | Fires up and dies, Hard starting | Idling instability (rough idling) | Incorrect idle speed | Engine stall | |
| Power supply (MFI relay) and ignition switch-IG | 1 (1) | | | | | 13A-63 |
| Engine control module power ground | 2 (2) | | | | | 13A-66 |
| Fuel pump | 3 (3) | 1 (1) | | | 1 (1) | 13A-67 |
| Volume air flow sensor | | | | | 11 (10) | 13A-70 |
| Intake air temperature sensor | | | 5 | | | 13A-75 |
| Barometric pressure sensor | | | 7 | | | 13A-78 |
| Engine coolant temperature sensor | | (3) | 6 (5) | 1 (1) | 5 (5) | 13A-80 |
| Throttle position sensor | | | | | | 13A-83 |
| Closed throttle position switch | | | 3 (3) | 2 (2) | 4 (4) | 13A-86 |
| Camshaft position sensor | 5 (5) | 6 (7) | | | 8 (7) | 13A-89 |
| Crankshaft position sensor | 6 (6) | 7 (8) | | | 9 (8) | 13A-96 |
| Ignition switch-ST <M/T> | 4 (4) | 3 (4) | | | | 13A-100 |
| Ignition switch-ST and Park/Neutral position switch <A/T> | 4 (4) | 3 (4) | | 5 | | 13A-102 |
| Vehicle speed sensor | | | | | 6 | 13A-106 |
| Power steering pressure switch | | | | 3 | | 13A-108 |
| Air conditioning switch and compressor clutch relay | | | | 4 | | 13A-110 |
| Heated oxygen sensor | | | 9 | | | 13A-117 |
| Injectors | 8 (8) | 2 (2) | 2 (2) | | 3 (3) | 13A-124 |
| Idle air control motor (stepper motor) | | 4 (5) | 1 (1) | 6 (3) | 2 (2) | 13A-130 |
| Ignition coil and ignition power transistor | 7 (7) | | | | 10 (9) | 13A-135 |
| Evaporative emission purge solenoid | | | 8 | | | 13A-151 |
| EGR solenoid | | | | | | 13A-157 |
| Anti-lock brake signal | | | | | | 13A-159 |
| Fuel pressure | | 5 (6) | 4 (4) | | 7 (6) | 13A-162 |

NOTE
The numbers in the chart indicate check order [( ): cold engine, without ( ): warm engine].

**TSB Revision**

| Items | Driving Hesitation, Sag | Driving Poor acceleration | Driving Stumble | Driving Shock | Driving Surge | Driving Knocking | Stopping Run-on (dieseling) | Reference page |
|---|---|---|---|---|---|---|---|---|
| Power supply (MFI relay) and ignition switch-IG | | | | | | | | 13A-63 |
| Engine control module power ground | | | | | | | | 13A-66 |
| Fuel pump | 1 (1) | 1 (1) | | | | | | 13A-67 |
| Volume air flow sensor | 9 (9) | | 5 (5) | 5 (5) | | 3 (3) | | 13A-70 |
| Intake air temperature sensor | 5 (5) | 4 (4) | | | | 1 (1) | | 13A-75 |
| Barometric pressure sensor | 8 (8) | 6 (6) | | | | 2 (2) | | 13A-78 |
| Engine coolant temperature sensor | 7 (7) | 5 (5) | 4 (4) | | 3 (3) | | | 13A-80 |
| Throttle position sensor | 6 (6) | | 3 (3) | 4 (4) | | | | 13A-83 |
| Closed throttle position switch | | | | | | | | 13A-86 |
| Camshaft position sensor | | | | 2 (2) | | | | 13A-89 |
| Crankshaft position sensor | | | | 3 (3) | | | | 13A-96 |
| Ignition switch-ST <M/T> | | | | | | | | 13A-100 |
| Ignition switch-ST and Park/Neutral position switch <A/T> | | | | | | | | 13A-102 |
| Vehicle speed sensor | | | | 6 | | | | 13A-106 |
| Power steering pressure switch | | | | | | | | 13A-108 |
| Air conditioning switch and compressor clutch relay | | | | | | | | 13A-110 |
| Heated oxygen sensor | | | | | | | | 13A-117 |
| Injectors | 2 (2) | 2 (2) | 1 (1) | | 1 (1) | | 1 | 13A-124 |
| Idle air control motor (stepper motor) | | | | 8 (6) | | | | 13A-130 |
| Ignition coil and ignition power transistor | | 7 (7) | | 1 (1) | | 4 (4) | | 13A-135 |
| Evaporative emission purge solenoid | | | | | | | | 13A-151 |
| EGR solenoid | | | | | | | | 13A-157 |
| Anti-lock brake signal | | | | 7 | | | | 13A-159 |
| Fuel pressure | 3 (3) | 3 (3) | 2 (2) | | 2 (2) | | | 13A-162 |

OTE
he numbers in the chart indicate check order [( ): cold engine, without ( ): warm engine].

**TSB Revision**

**<SOHC-24 valve engine>**

| Items | Starting | Starting | Idling stability | Idling stability | Idling stability | Reference page |
|---|---|---|---|---|---|---|
| | Will not start | Fires up and dies, Hard starting | Idling instability (rough idling) | Incorrect idle speed | Engine stall | |
| Power supply (MFI relay) and ignition switch-IG | 1 (1) | | | | | 13A-63 |
| Engine control module power ground | 2 (2) | | | | | 13A-66 |
| Fuel pump | 3 (3) | 1 (1) | | | 1 (1) | 13A-67 |
| Volume air flow sensor | | | | | 11 (10) | 13A-70 |
| Intake air temperature sensor | | | 5 | | | 13A-75 |
| Barometric pressure sensor | | | 7 | | | 13A-78 |
| Engine coolant temperature sensor | | (3) | 6 (5) | 1 (1) | 5 (5) | 13A-80 |
| Throttle position sensor | | | | | | 13A-83 |
| Closed throttle position switch | | | 3 (3) | 2 (2) | 4 (4) | 13A-86 |
| Camshaft position sensor | 5 (5) | 6 (7) | | | 8 (7) | 13A-93 |
| Crankshaft position sensor | 6 (6) | 7 (8) | | | 9 (8) | 13A-96 |
| Ignition switch-ST <M/T> | 4 (4) | 3 (4) | | | | 13A-100 |
| Ignition switch-ST and Park/Neutral position switch <A/T> | 4 (4) | 3 (4) | | 5 | | 13A-104 |
| Vehicle speed sensor | | | | | 6 | 13A-106 |
| Power steering pressure switch | | | | 3 | | 13A-108 |
| Air conditioning switch and compressor clutch relay | | | | 4 | | 13A-110 |
| Heated oxygen sensor | | | 9 | | | 13A-117*1 13A-121*2 |
| Injectors | 8 (8) | 2 (2) | 2 (2) | | 3 (3) | 13A-124 |
| Idle air control motor (stepper motor) | | 4 (5) | 1 (1) | 6 (3) | 2 (2) | 13A-130 |
| Ignition coil and ignition power transistor | 7 (7) | | | | 10 (9) | 13A-140 |
| Evaporative emission purge solenoid | | | 8 | | | 13A-151*1 13A-153*2 |
| EGR solenoid | | | | | | 13A-157*1 |
| Anti-lock brake signal | | | | | | 13A-159 |
| Fuel pressure | | 5 (6) | 4 (4) | | 7 (6) | 13A-165 |

NOTE
1. The numbers in the chart indicate check order [( ): cold engine, without ( ): warm engine].
2. *1: Federal
   *2: California

**TSB Revision**

| Items | Driving | Driving | Driving | Driving | Driving | Driving | Stopping | Reference page |
|---|---|---|---|---|---|---|---|---|
| | Hesitation, Sag | Poor acceleration | Stumble | Shock | Surge | Knocking | Run-on (dieseling) | |
| Power supply (MFI relay) and ignition switch-IG | | | | | | | | 13A-63 |
| Engine control module power ground | | | | | | | | 13A-66 |
| Fuel pump | 1 (1) | 1 (1) | | | | | | 13A-67 |
| Volume air flow sensor | 9 (9) | | 5 (5) | 5 (5) | | 3 (3) | | 13A-70 |
| Intake air temperature sensor | 5 (5) | 4 (4) | | | | 1 (1) | | 13A-75 |
| Barometric pressure sensor | 8 (8) | 6 (6) | | | | 2 (2) | | 13A-78 |
| Engine coolant temperature sensor | 7 (7) | 5 (5) | 4 (4) | | 3 (3) | | | 13A-80 |
| Throttle position sensor | 6 (6) | | 3 (3) | 4 (4) | | | | 13A-83 |
| Closed throttle position switch | | | | | | | | 13A-86 |
| Camshaft position sensor | | | | 2 (2) | | | | 13A-93 |
| Crankshaft position sensor | | | | 3 (3) | | | | 13A-96 |
| Ignition switch-ST <M/T> | | | | | | | | 13A-100 |
| Ignition switch-ST and Park/Neutral position switch <A/T> | | | | | | | | 13A-104 |
| Vehicle speed sensor | | | | 6 | | | | 13A-106 |
| Power steering pressure switch | | | | | | | | 13A-108 |
| Air conditioning switch and compressor clutch relay | | | | | | | | 13A-110 |
| Heated oxygen sensor | | | | | | | | 13A-117*1<br>13A-121*2 |
| Injectors | 2 (2) | 2 (2) | 1 (1) | | 1 (1) | | 1 | 13A-124 |
| Idle air control motor (stepper motor) | | | | 8 (6) | | | | 13A-130 |
| Ignition coil and ignition power transistor | | 7 (7) | | 1 (1) | | 4 (4) | | 13A-140 |
| Evaporative emission purge solenoid | | | | | | | | 13A-151*1<br>13A-153*2 |
| EGR solenoid | 4 (4) | | 6 (6) | | 4 (4) | | | 13A-157*1 |
| Anti-lock brake signal | | | | 7 | | | | 13A-159 |
| Fuel pressure | 3 (3) | 3 (3) | 2 (2) | | 2 (2) | | | 13A-165 |

NOTE
1. The numbers in the chart indicate check order [( ): cold engine, without ( ): warm engine].
2. *1: Federal
   *2: California

**TSB Revision**

<DOHC>

| Items | Starting | Starting | Idling stability | Idling stability | Idling stability | Reference page |
|---|---|---|---|---|---|---|
| | Will not start | Fires up and dies, Hard starting | Idling instability (rough idling) | Incorrect idle speed | Engine stall | |
| Power supply (MFI relay) and ignition switch-IG | 1 (1) | | | | | 13A-63 |
| Engine control module power ground | 2 (2) | | | | | 13A-66 |
| Fuel pump | 3 (3) | 1 (1) | | | 1 (1) | 13A-67 |
| Volume air flow sensor | | | | | 11 (10) | 13A-70 |
| Intake air temperature sensor | | | 5 | | | 13A-75 |
| Barometric pressure sensor | | | 7 | | | 13A-78 |
| Engine coolant temperature sensor | | (3) | 6 (5) | 1 (1) | 5 (5) | 13A-80 |
| Throttle position sensor | | | | | | 13A-83 |
| Closed throttle position switch | | | 3 (3) | 2 (2) | 4 (4) | 13A-86 |
| Camshaft position sensor | 5 (5) | 6 (7) | | | 8 (7) | 13A-93 |
| Crankshaft position sensor | 6 (6) | 7 (8) | | | 9 (8) | 13A-96 |
| Ignition switch-ST and Park/Neutral position switch | 4 (4) | 3 (4) | | 6 | | 13A-104 |
| Vehicle speed sensor | | | | | 6 | 13A-106 |
| Power steering pressure switch | | | | 3 | | 13A-108 |
| Air conditioning switch and compressor clutch relay | | | | 4 | | 13A-110 |
| Knock sensor | | | | | | 13A-112 |
| Electrical load switch | | | | 5 | | 13A-113 |
| Heated oxygen sensor | | | 9 | | | 13A-117 |
| Injectors | 8 (8) | 2 (2) | 2 (2) | | 3 (3) | 13A-124 |
| Idle air control motor (stepper motor) | | 4 (5) | 1 (1) | 7 (3) | 2 (2) | 13A-130 |
| Ignition coil and ignition power transistor | 7 (7) | | | | 10 (9) | 13A-145 |
| Variable induction control solenoid | | | | | | 13A-149 |
| Evaporative emission purge solenoid | | | 8 | | | 13A-151 |
| EGR solenoid | | | | | | 13A-157 |
| Anti-lock brake signal | | | | | | 13A-159 |
| Fuel pressure | | 5 (6) | 4 (4) | | 7 (6) | 13A-167 |

NOTE
The numbers in the chart indicate check order [( ): cold engine, without ( ): warm engine].

**TSB Revision**

| Items | Driving Hesitation, Sag | Driving Poor acceleration | Driving Stumble | Driving Shock | Driving Surge | Driving Knocking | Stopping Run-on (dieseling) | Reference page |
|---|---|---|---|---|---|---|---|---|
| Power supply (MFI relay) and ignition switch-IG | | | | | | | | 13A-63 |
| Engine control module power ground | | | | | | | | 13A-66 |
| Fuel pump | 1 (1) | 1 (1) | | | | | | 13A-67 |
| Volume air flow sensor | 10 (10) | | 5 (5) | 5 (5) | | 4 (4) | | 13A-70 |
| Intake air temperature sensor | 6 (6) | 5 (5) | | | | 2 (2) | | 13A-75 |
| Barometric pressure sensor | 9 (9) | 7 (7) | | | | 3 (3) | | 13A-78 |
| Engine coolant temperature sensor | 8 (8) | 6 (6) | 4 (4) | | 3 (3) | | | 13A-80 |
| Throttle position sensor | 7 (7) | | 3 (3) | 4 (4) | | | | 13A-83 |
| Closed throttle position switch | | | | | | | | 13A-86 |
| Camshaft position sensor | | | | 2 (2) | | | | 13A-93 |
| Crankshaft position sensor | | | | 3 (3) | | | | 13A-96 |
| Ignition switch-ST and Park/Neutral position switch | | | | | | | | 13A-104 |
| Vehicle speed sensor | | | | 6 | | | | 13A-106 |
| Power steering pressure switch | | | | | | | | 13A-108 |
| Air conditioning switch and compressor clutch relay | | | | | | | | 13A-110 |
| Knock sensor | | | | | | 1 (1) | | 13A-112 |
| Electrical load switch | | | | | | | | 13A-113 |
| Heated oxygen sensor | | | | | | | | 13A-117 |
| Injectors | 2 (2) | 2 (2) | 1 (1) | | 1 (1) | | 1 | 13A-124 |
| Idle air control motor (stepper motor) | | | | 8 (6) | | | | 13A-130 |
| Ignition coil and ignition power transistor | | 8 (8) | | 1 (1) | | 5 (5) | | 13A-145 |
| Variable induction control solenoid | 4 (4) | 4 (4) | | | | | | 13A-149 |
| Evaporative emission purge solenoid | | | | | | | | 13A-151 |
| EGR solenoid | 5 (5) | | 6 (6) | | 4 (4) | | | 13A-157 |
| Anti-lock brake signal | | | | 7 | | | | 13A-159 |
| Fuel pressure | 3 (3) | 3 (3) | 2 (2) | | 2 (2) | | | 13A-167 |

NOTE
The numbers in the chart indicate check order [( ): cold engine, without ( ): warm engine].

**TSB Revision**

## PROBLEM SYMPTOMS TABLE (FOR YOUR INFORMATION)

13110110010

| Item | | Symptom |
|---|---|---|
| Starting | Won't start (no initial combustion) | The starter is used to crank the engine, but there is no combustion within the cylinders, and the engine won't start. |
| | Fires up and dies | There is combustion within the cylinders, but then the engine soon stalls. |
| | Hard starting | Engine starts after cranking |
| Iding stability | Hunting | Engine speed doesn't remain constant; changes at idling. |
| | Rough idle | Usually, a judgement can be based upon the movement of the tachometer pointer, and the vibration transmitted to the steering wheel, shift lever, body, etc. This is called rough idling. |
| | Incorrect idle speed | The engine doesn't idle at the correct speed. |
| | Engine stall (Die out) | This non-continuity in idling includes the following elements. The engine stalls when the foot is taken from the accelerator pedal, regardless of whether the vehicle is moving or not. |
| | Engine stall (Pass out) | This non-continuity in idling includes the following elements. The engine stalls when the accelerator pedal is depressed or while it is being used. |
| Driving | Hesitation and sag | "Hesitation" is the delay in response of the vehicle speed (engine rpm) that occurs when the accelerator is depressed in order to accelerate from the speed at which the vehicle is now traveling, or a temporary drop in vehicle speed (engine rpm) during such acceleration. Serious hesitation is called "sag." (Refer to Fig.1.) |
| | Poor acceleration | The inability to obtain an acceleration corresponding to the degree of throttle opening, even though acceleration is smooth, or the inability to reach maximum speed. |
| | Stumble | Engine rpm increase is delayed when the accelerator pedal is initially depressed for acceleration from the stopped condition. (Refer to Fig.2.) |
| | Shock | The feeling of a comparatively large impact or vibration when the engine is accelerated or decelerated. |
| | Surge | This is slight acceleration and deceleration feel usually at steady, light throttle cruise must notable under light loads. |
| | Knocking | A sharp sound like a hammer striking the cylinder walls during driving and which adversely affects driving. |
| Stopping | Run-on (Dieseling) | The engine continues to run even after the ignition switch is turned OFF. This is called dieseling. |

Fig.1

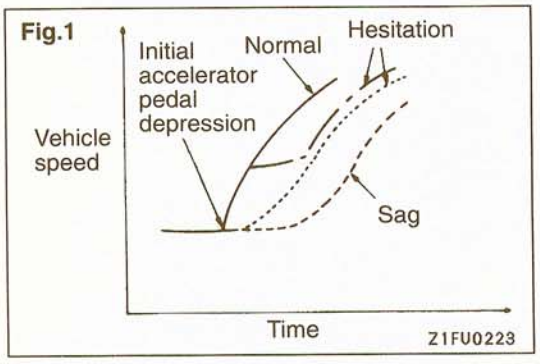


Fig.2

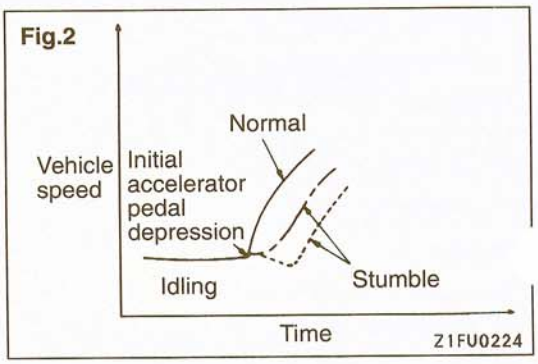


**TSB Revision**

# ON-VEHICLE SERVICE

13100180096

## BASIC IDLE SPEED ADJUSTMENT

NOTE

1. The basic idle speed has been factory-adjusted with the engine speed adjusting screw and does not normally require adjustment.
2. If the adjustment has been disturbed, the idle speed is too high or the idle speed drops because a load such as that from the air conditioning is being applied to the engine, try carrying out adjustment by the following procedure.
3. If adjustment is required, first check that the ignition plug, injector, idle air control motor, and compression pressure are normal.

(1) Before starting the inspection and adjustment procedures, set the vehicle in the following conditions:
- Engine coolant temperature: 80–95°C (176–203°F)
- Lights and all accessories: OFF
- Transmission: Neutral (P for vehicles on automatic transmission)

(2) Connect the scan tool to the data link connector (16pin).

NOTE
Connection of the scan tool grounds the diagnostic test mode control terminal.

(3) If not using the scan tool proceed as follows:

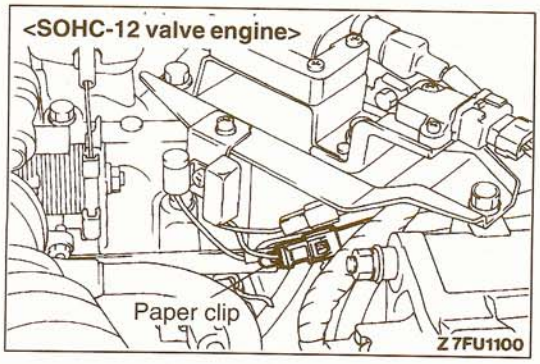


**<SOHC-12 valve engine>**

1) Insert the paper clip into the female side of the 1-pin connector as shown in the illustration at left.
Do not disconnect the connector at this time.

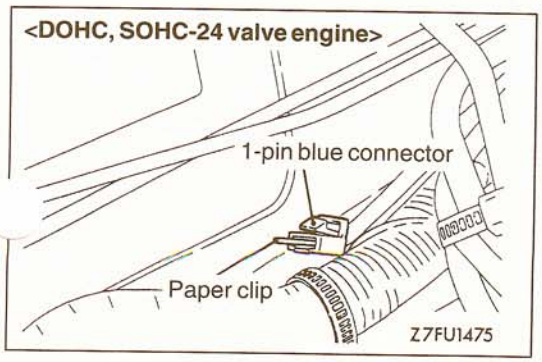


**<DOHC, SOHC-24 valve engine>**

1) Insert a paper clip into the 1-pin blue connector as shown in the illustration.

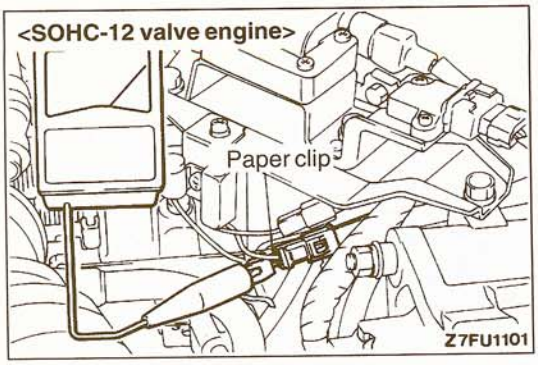


2) Connect a primary voltage-detecting tachometer to the paper clip.

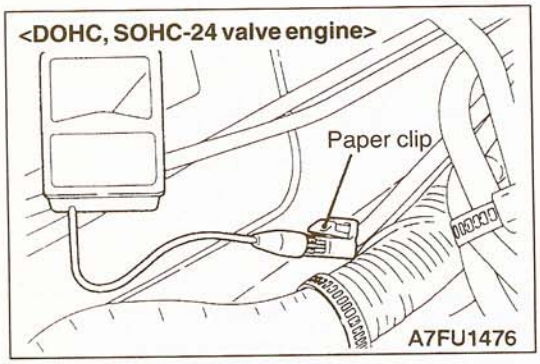


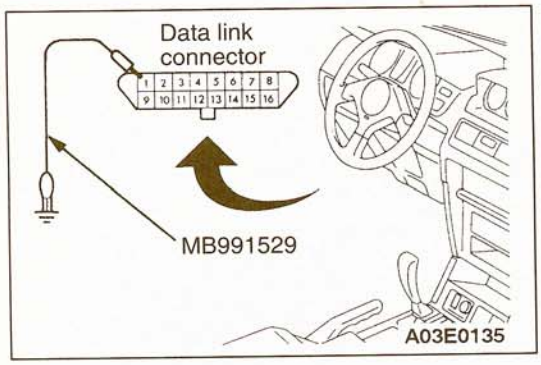


3) Use the special tool (diagnostic trouble code check harness) to connect the diagnostic test mode control terminal (terminal (1)) of the data link connector (16-pin) to the ground.

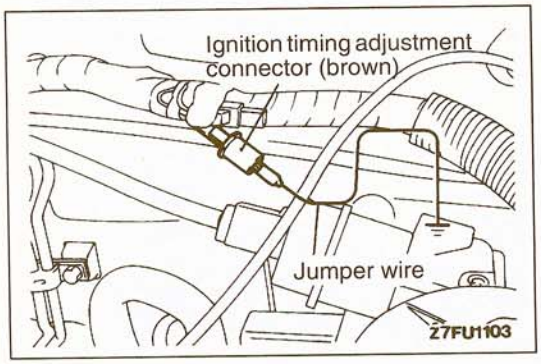


(4) Disconnect the waterproof female connector from the ignition timing adjusting connector (brown).
(5) Use a jumper wire to ground the ignition timing adjusting terminal.

(6) Start the engine and run at idle.
(7) Check the basic idle speed.

**Basic idle speed: 700±50 r/min**

NOTE
1. The engine speed may be low by 20 to 100 r/min while the vehicle is new [distance driven approx. 500 km (300 miles) or less], but no adjustment is necessary.
2. If the engine stalls or speed is low despite a sufficient distance driven [approx. 500 km (300 miles) or more], the cause is probably deposits on the throttle valve. In this case, clean the throttle valve. (Refer to P.13A-48.)

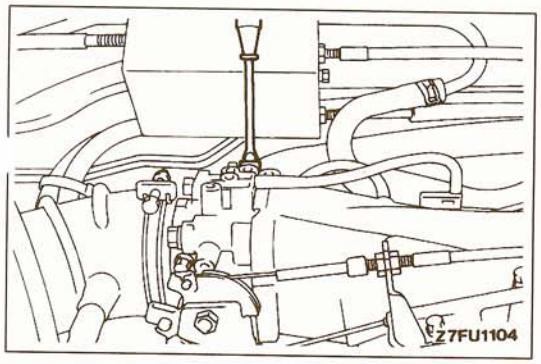


(8) If the basic idle speed is outside the standard value, adjust by turning the engine speed adjusting screw.

NOTE
If the idle speed is higher than the standard value even when the engine speed adjusting screw is fully tightened, check if there is evidence of the fixed SAS being moved. If the fixed SAS seems to have been moved, adjust it.

**<SOHC-12 valve engine>**

If it does not seem to have been moved, there may be a leak caused by deteriorated fast idle air valve (FIAV). In such a case, replace the throttle body.

(9) Turn the ignition switch to OFF.
(10) When the scan tool has not been used, remove the jumper wire from the diagnostic test mode control terminal.
(11) Remove the jumper wire from the ignition timing adjusting terminal and re-connect the connector.
(12) Start the engine again and run at idle for 10 minutes to make sure that the engine runs at proper idle speed.

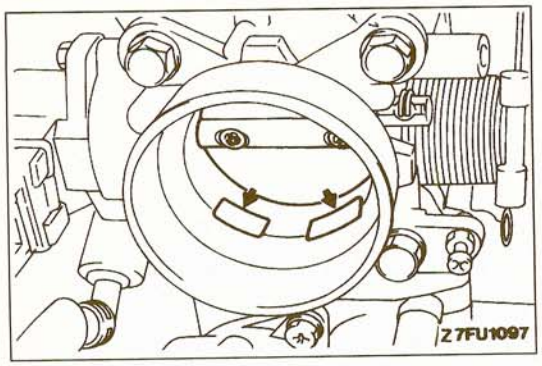


## THROTTLE BODY (THROTTLE VALVE AREA) CLEANING

13100100092

(1) Start the engine and warm it up until the temperature of the engine coolant reaches 80°C (176°F) or higher, then stop the engine.
(2) Disconnect the air intake hose at the throttle body side.
(3) Plug the bypass intake port inlet (arrow) into the throttle body.

**Caution**
**Never let cleaning liquid get into the bypass intake.**

(4) Spray cleaning liquid from the intake port of the throttle body onto the valve, and then leave as is for about five minutes.
(5) Start the engine and race it a few times; then let it run at idle speed for about one minute.

NOTE
The engine idling speed is unstable (or the engine stalls), let the engine run with the throttle valve slightly open.

(6) If deposits are not removed from the throttle valve, repeat steps (4) and (5).
(7) Remove the plug from the bypass intake port inlet in the throttle body.
(8) Connect the air intake hose.
(9) Using the scan tool erase the diagnostic trouble code or disconnect the negative battery cable for more than 10 seconds and then connect it again.
(10) Adjust the basic idle speed. (Refer to P.13A-45.)

NOTE
If hunting of the idling engine occurs after adjusting the basic idling speed, disconnect the negative battery cable from the battery terminal for more than 10 seconds, and then idle the engine again.

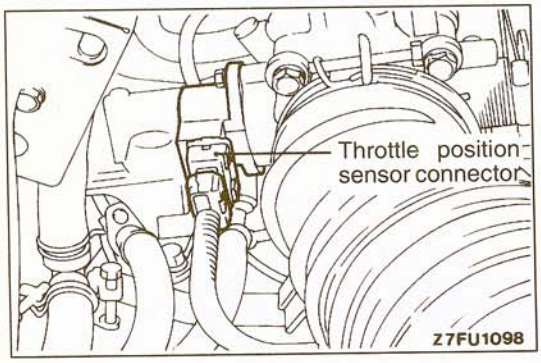


## CLOSED THROTTLE POSITION SWITCH AND THROTTLE POSITION SENSOR ADJUSTMENT

13100130084

(1) Connect the scan tool to the data link connector. When not using the scan tool, proceed as follows.
  1) Disconnect the connector of the throttle position sensor.

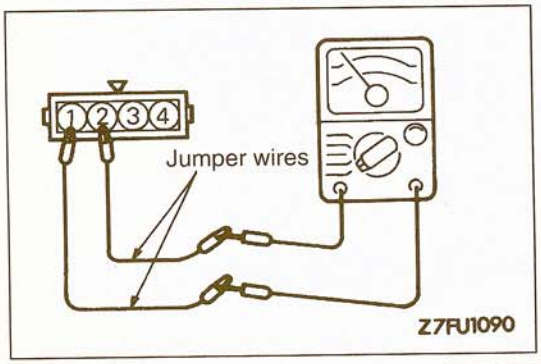


  2) Connect an ohmmeter between terminal 2 (closed throttle position switch) and 1 (sensor ground) by using jumper wires.

TSB Revision

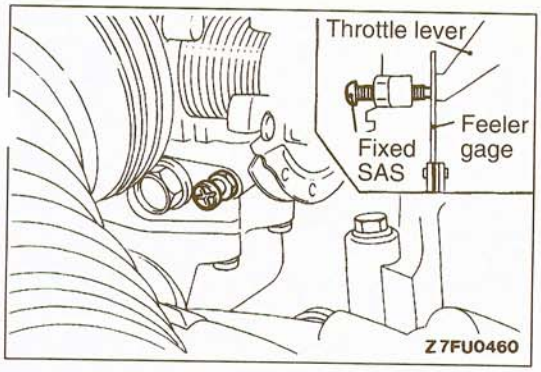


(2) Insert a feeler gage with a thickness of 0.65 mm (.0256 in.) between the fixed SAS and throttle lever.
(3) When using the scan tool, turn the ignition switch ON. (but do not start the engine.)

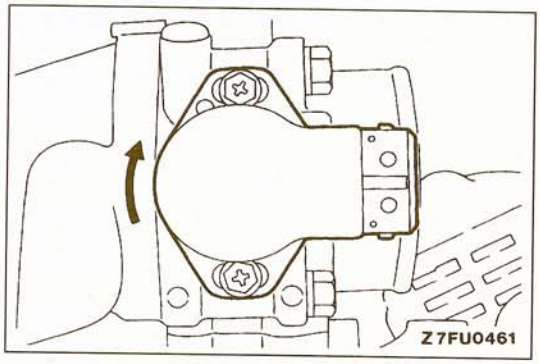


(4) Loosen the throttle position sensor mounting bolts and turn the throttle position sensor body fully clockwise.
(5) In this condition, make sure that the closed throttle position switch is ON. (There is continuity between terminals 1 and 2.)

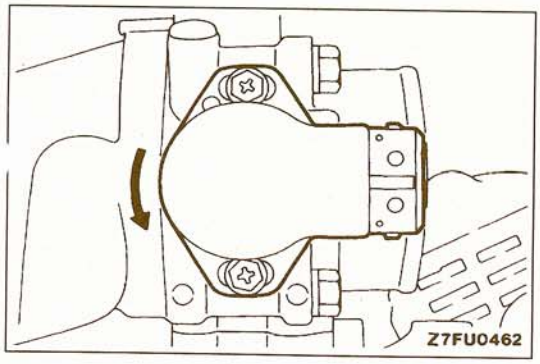


(6) Slowly turn the throttle position sensor clockwise until the point at which the idle switch is turned off (continuity between terminals 1 and 2 changes to non-continuity) is found.
Tighten the throttle position sensor installation bolt at that position.

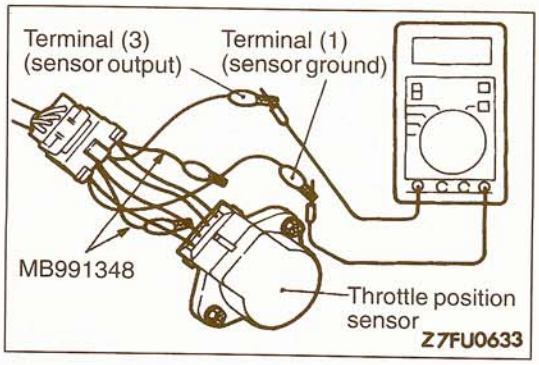


(7) When not using the scan tool, proceed as follows.
  1) Connect the special tool (test harness set) between the disconnected throttle position sensor connectors. (Connect all terminals, while being careful not to mistake the terminal numbers.)
  2) Connect a digital voltmeter between the throttle position sensor terminal 3 (sensor output) and terminal 1 (sensor ground.)
  3) Turn the ignition switch ON (but do not start the engine).
(8) Check the throttle position sensor output voltage.

**Standard value: 400–1,000 mV**

(9) If the voltage is outside the standard value, check the throttle position sensor and associated harnesses.
(10) Remove the feeler gage.
(11) Turn the ignition switch to OFF.

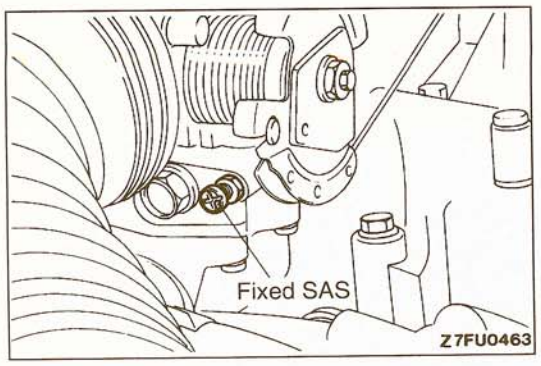


## FIXED SAS ADJUSTMENT

13100150097

NOTE
1. The fixed SAS has been factory-adjusted. Never attemp to move it.
2. If the adjustment is incorrect, adjust by following the procedure given below.

(1) Sufficiently slacken the accelerator cable.
(2) Loosen the lock nut on the fixed SAS.
(3) Sufficiently loosen the fixed SAS by turning it counterclockwise to fully close the throttle valve.
(4) Turn the fixed SAS clockwise slowly to find a point at which it contacts the throttle lever (where the throttle valve starts opening). From that point, tighten the fixed SAS further 1 1/4 turns.
(5) While holding the fixed SAS to prevent it from turning, tighten the lock nut securely.
(6) Adjust the accelerator cable tension. (Refer to GROUP 17 – Engine Control.)
(7) Adjust the basic idle speed.
(8) Adjust the closed throttle position switch and throttle position sensor (TPS). (Refer to P.13A-48.)

# ON-VEHICLE INSPECTION OF MFI COMPONENTS

13110130047

## COMPONENT LOCATION <SOHC-12 valve engine>

| Name | Symbol | Name | Symbol |
|---|---|---|---|
| Air conditioning compressor clutch relay | L | Ignition coil (Ignition power transistor) | E |
| Air conditioner switch | S | Ignition timing adjustment connector | J |
| Camshaft position sensor | O | Injector | F |
| Check engine/malfunction indicator lamp | R | Manifold differential pressure sensor | G |
| Crankshaft position sensor | N | Multiport fuel injection (MFI) relay | U |
| Data link connector | P | Park/Neutral position switch | W |
| EGR solenoid | I | Power steering pressure switch | B |
| Engine control module | T | Throttle position sensor (with built-in closed throttle position switch) | D |
| Engine coolant temperature sensor | M | | |
| Evaporative emission purge solenoid | H | Vehicle speed sensor | Q |
| Fuel pump check connector | K | Volume air flow sensor (with built-in intake air temperature sensor and barometric pressure sensor) | A |
| Heated oxygen sensor | V | | |
| Idle air control motor | C | | |

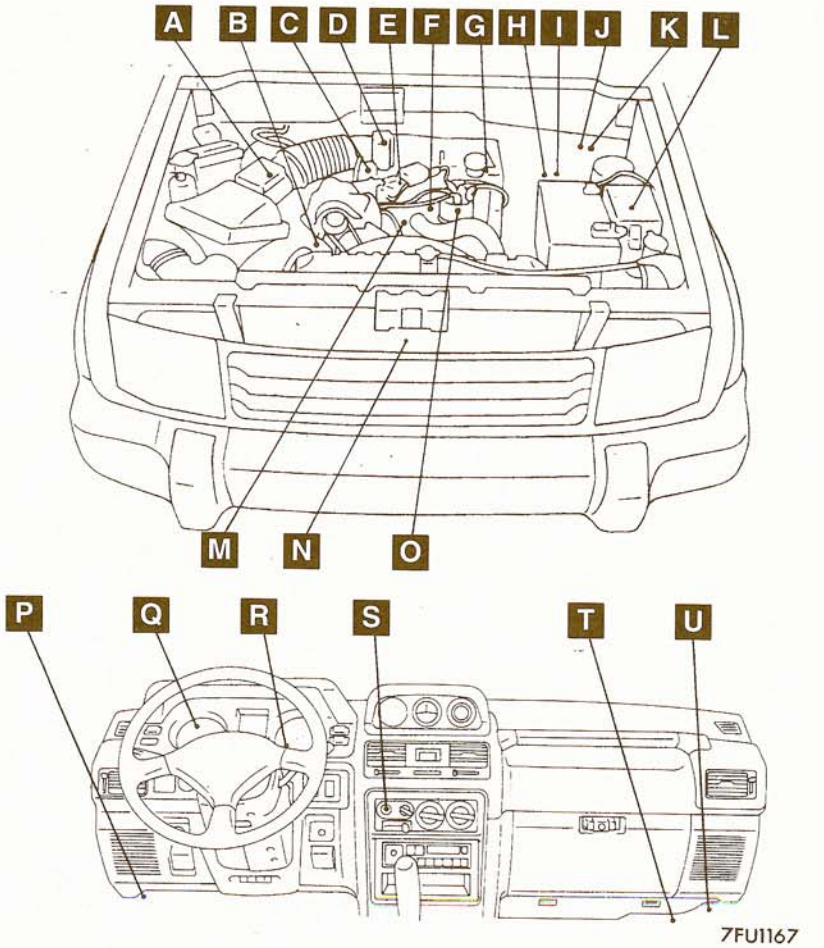


7FU1167

7FU1871

TSB Revision

A

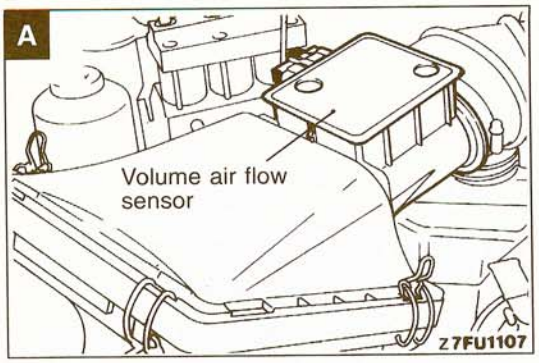


B

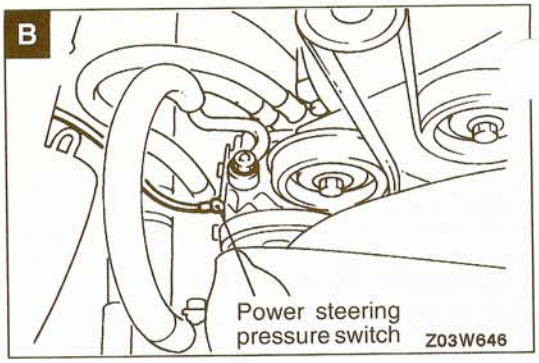


C

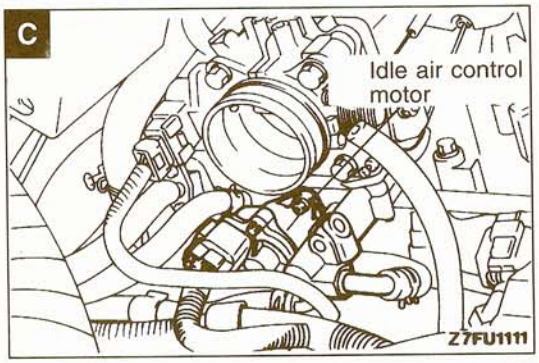


D

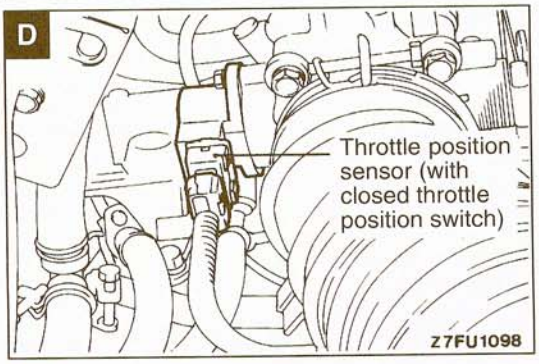


E

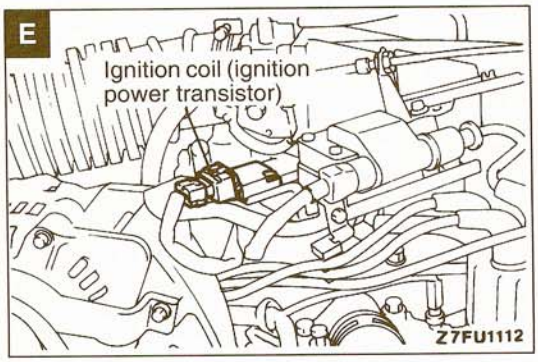


F

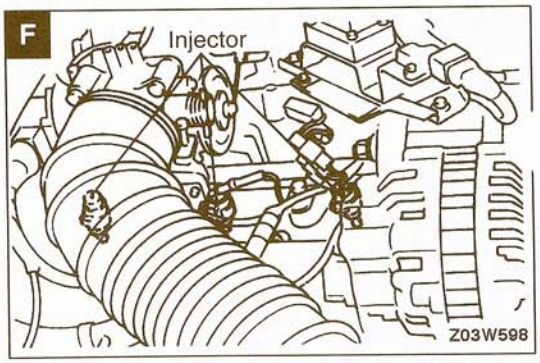


G

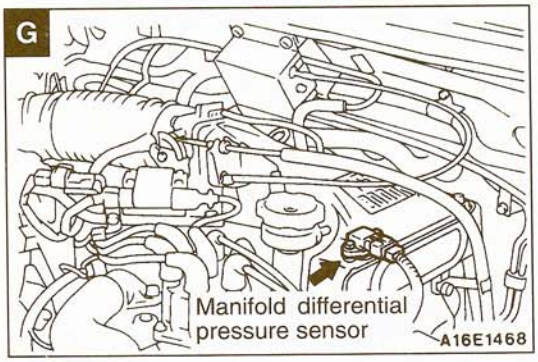


H

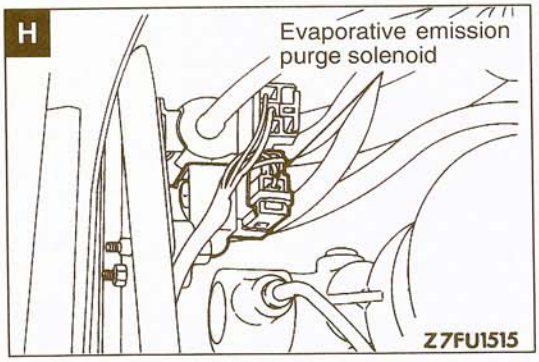


I

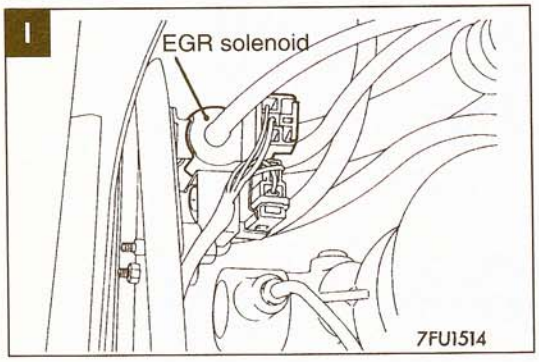


J

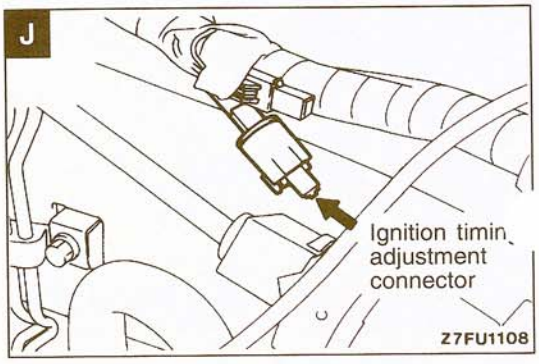


TSB Revision

K

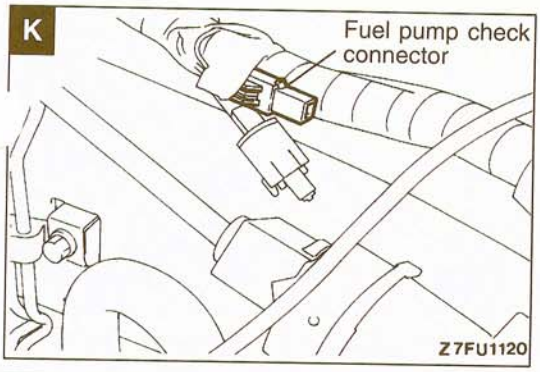
Fuel pump check connector
Z7FU1120

L

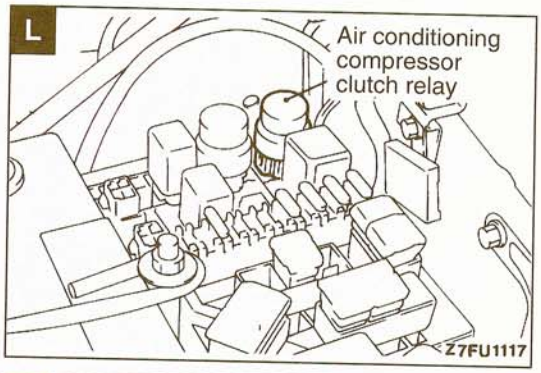
Air conditioning compressor clutch relay
Z7FU1117

M

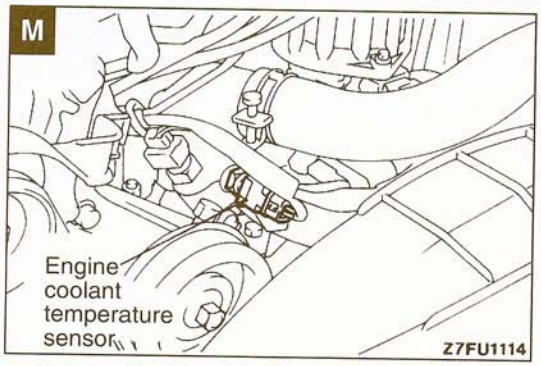
Engine coolant temperature sensor
Z7FU1114

N

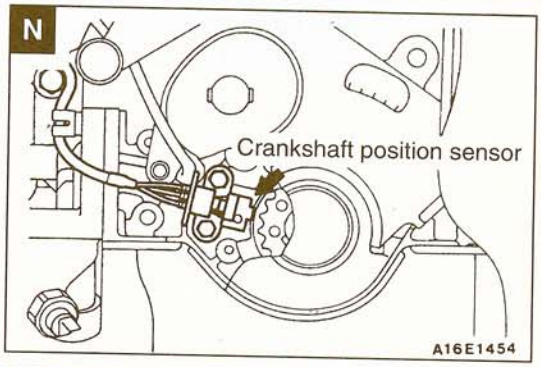
Crankshaft position sensor
A16E1454

O

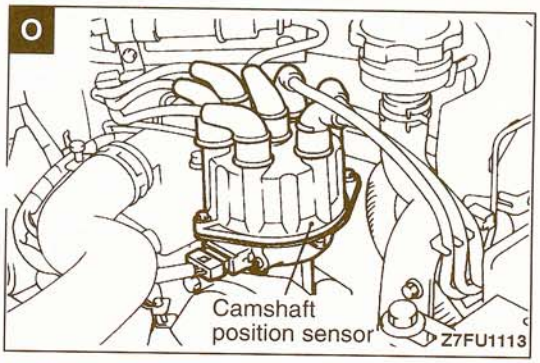
Camshaft position sensor
Z7FU1113

P

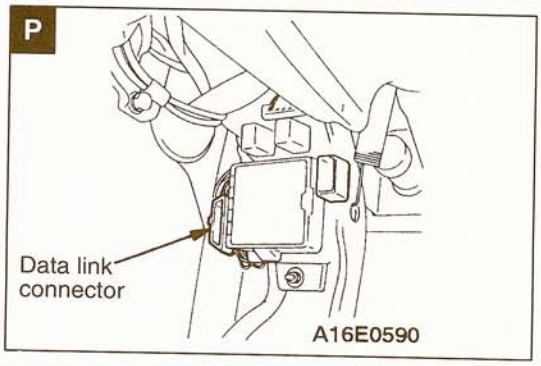
Data link connector
A16E0590

Q

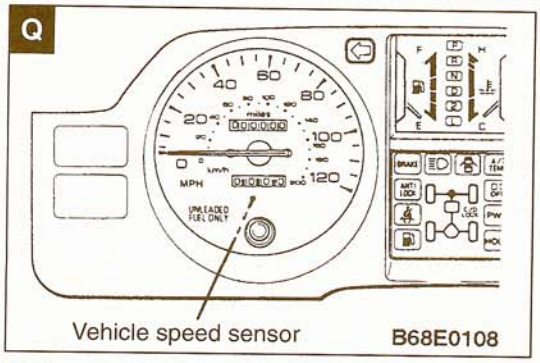
Vehicle speed sensor
B68E0108

R

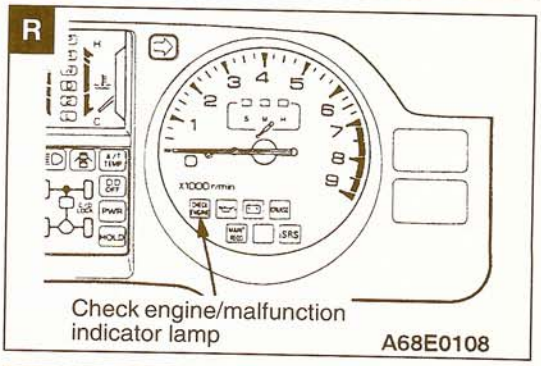
Check engine/malfunction indicator lamp
A68E0108

S

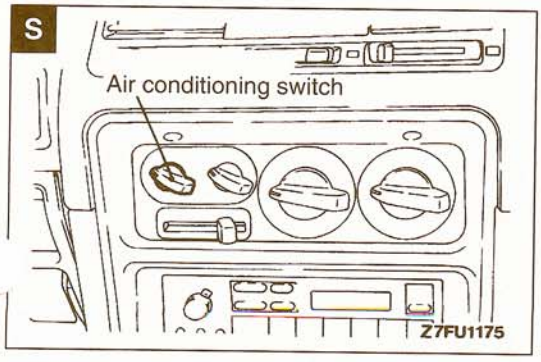
Air conditioning switch
Z7FU1175

T

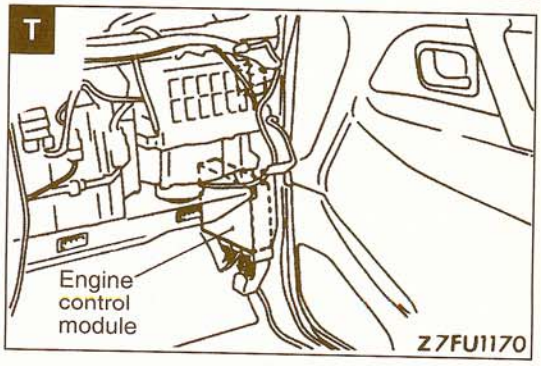
Engine control module
Z7FU1170

U

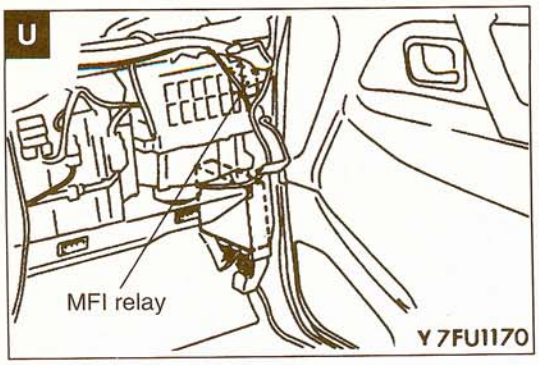
MFI relay
Y7FU1170

V

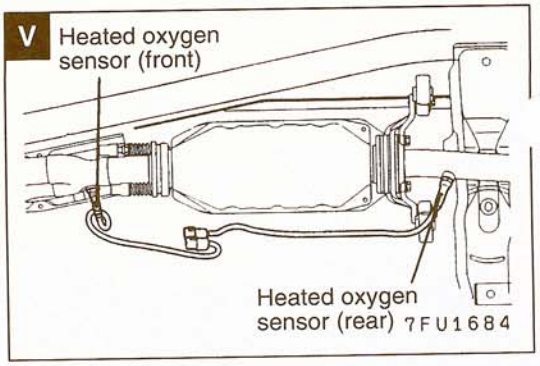
Heated oxygen sensor (front)
Heated oxygen sensor (rear)
7FU1684

W

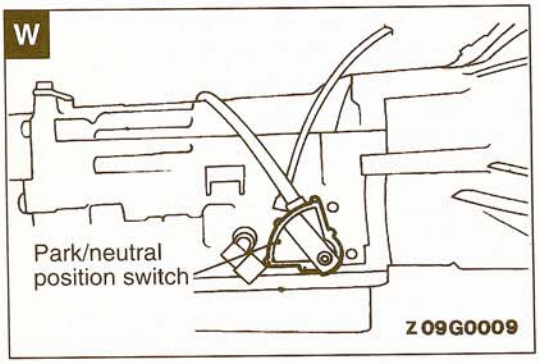
Park/neutral position switch
Z09G0009

## COMPONENT LOCATION <SOHC-24 valve engine>

13110130054

| Name | Symbol | Name | Symbol |
|---|---|---|---|
| Air conditioning compressor clutch relay | P | Heated oxygen sensor <Federal> | W |
| Air conditioner switch | T | Heated oxygen sensor <California> | X |
| Camshaft position sensor | O | Idle air control motor | K |
| Check engine/malfunction indicator lamp | S | Ignition coil (Ignition power transistor) | N |
| Crankshaft position sensor | M | Ignition timing adjustment connector | B |
| Data link connector | Q | Injector | D |
| EGR solenoid <Federal> | F | Manifold differential pressure sensor <Federal> | E |
| Engine control module | U | | |
| Engine coolant temperature sensor | L | Multiport fuel injection (MFI) relay | V |
| Evaporative emission purge solenoid | H | Park/Neutral position switch | Y |
| Evaporative emission purge solenoid No. 1/ No. 2 <California> | G | Power steering pressure switch | J |
| | | Throttle position sensor (with built-in closed throttle position switch) | C |
| Evaporative emission ventilation solenoid <California> | G | | |
| | | Vehicle speed sensor | R |
| Fuel pump check connector | A | Volume air flow sensor (with built-in intake air temperature sensor and barometric pressure sensor) | I |
| Fuel tank differential pressure sensor <California> | Z | | |

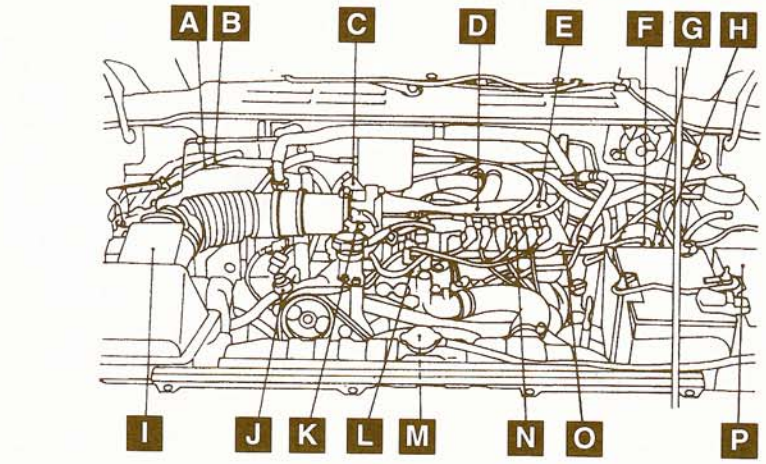


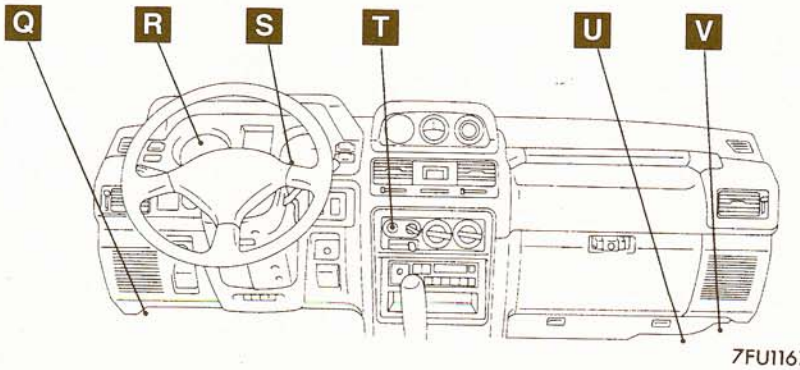


7FU1167

7FU1872

TSB Revision

A

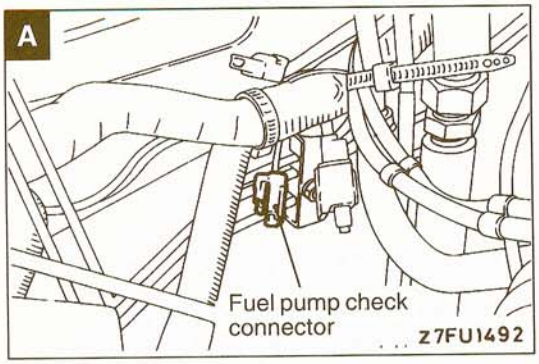


B

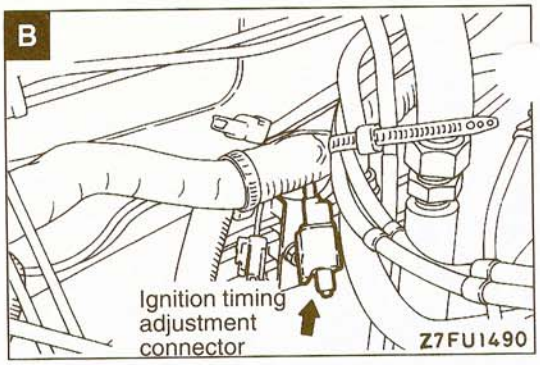


C

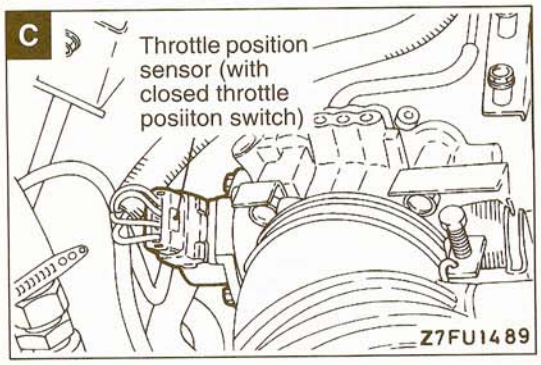


D

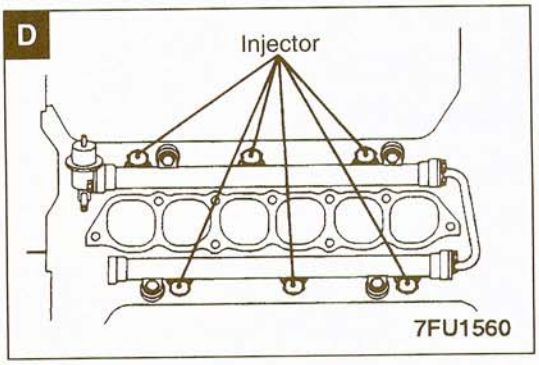


E <Federal>

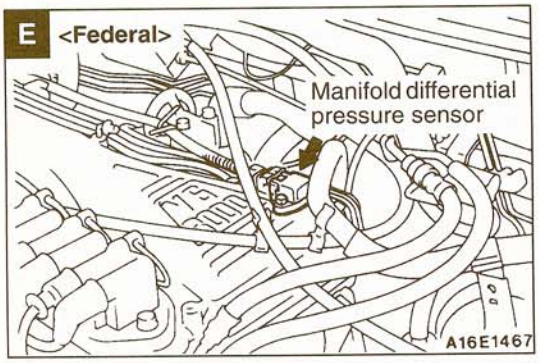


F <Federal>

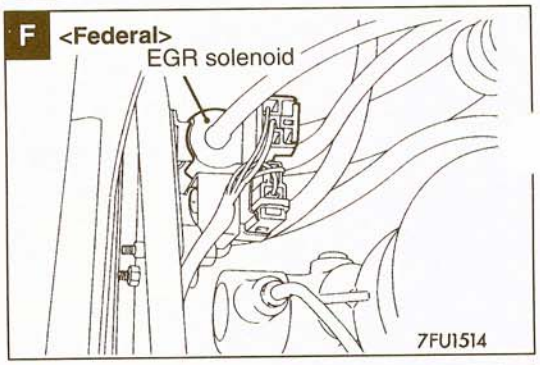


G <California>

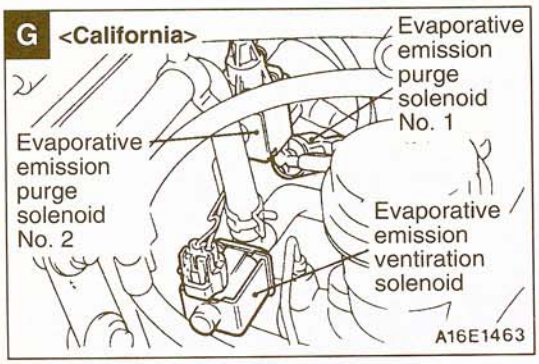


H <Federal>

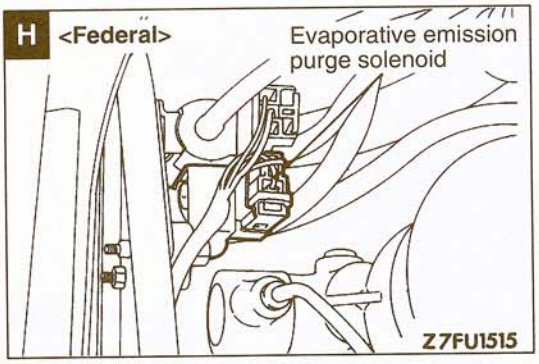


I

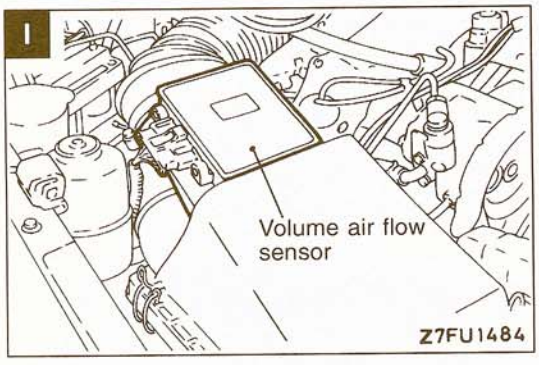


J

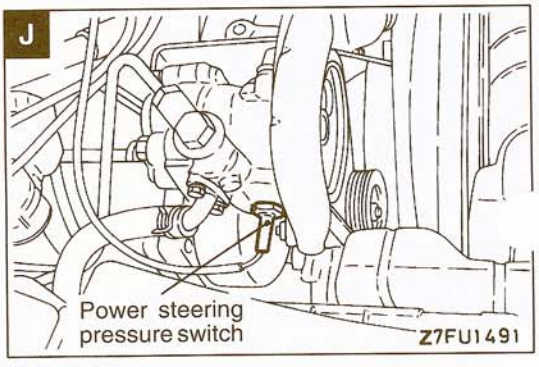


TSB Revision

K

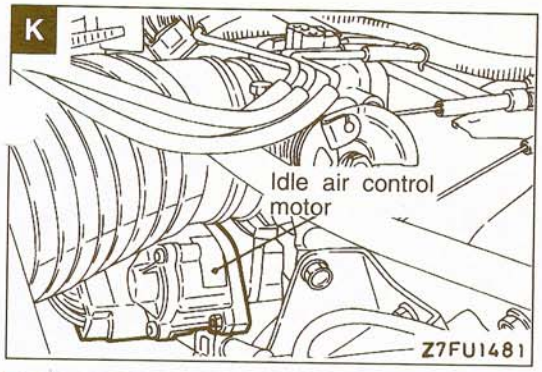
Idle air control motor
Z7FU1481

L

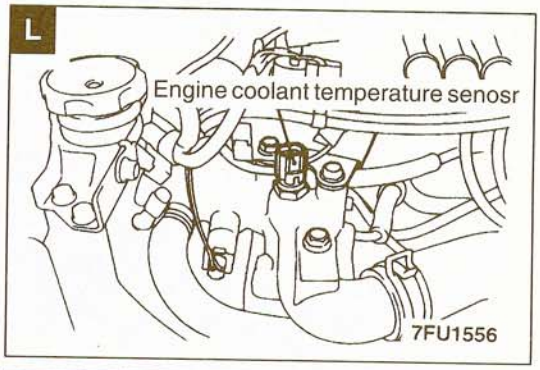
Engine coolant temperature senosr
7FU1556

M

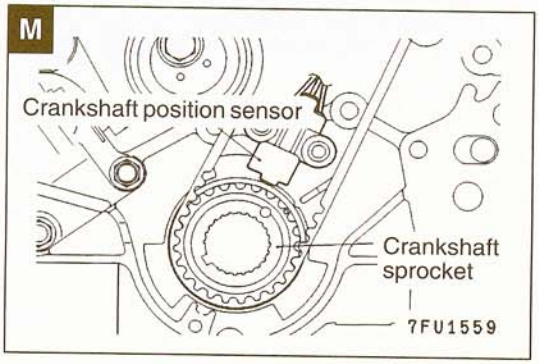
Crankshaft position sensor
Crankshaft sprocket
7FU1559

N

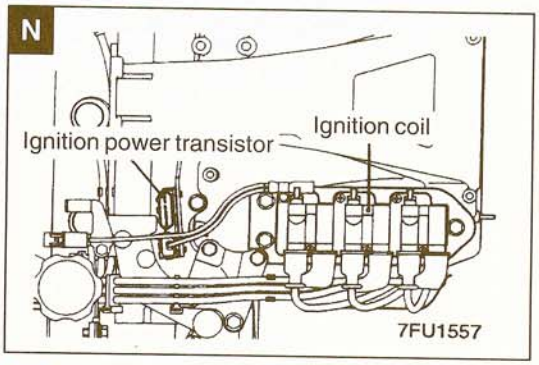
Ignition power transistor
Ignition coil
7FU1557

O

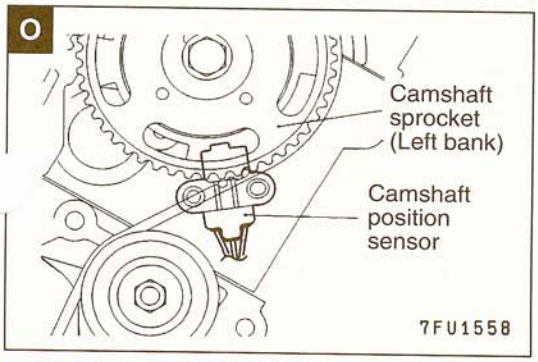
Camshaft sprocket (Left bank)
Camshaft position sensor
7FU1558

P

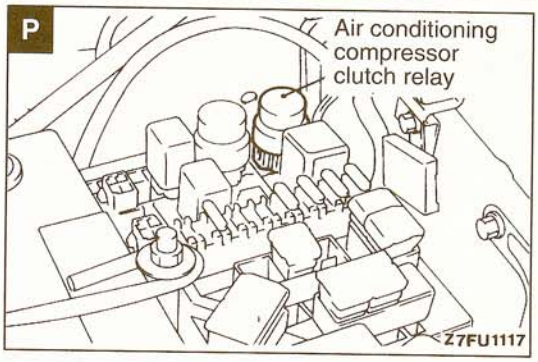
Air conditioning compressor clutch relay
Z7FU1117

Q

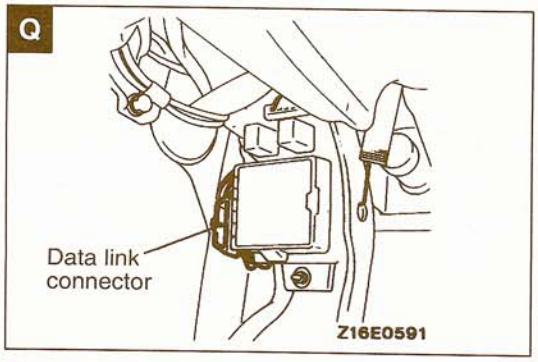
Data link connector
Z16E0591

R

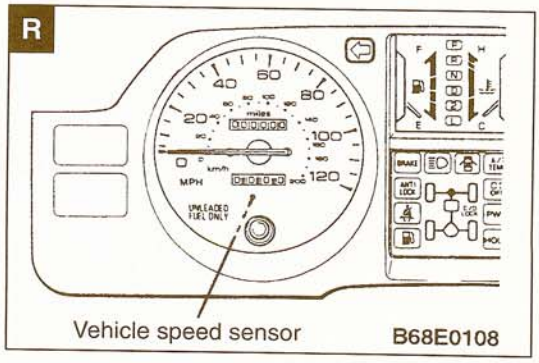
Vehicle speed sensor
B68E0108

S

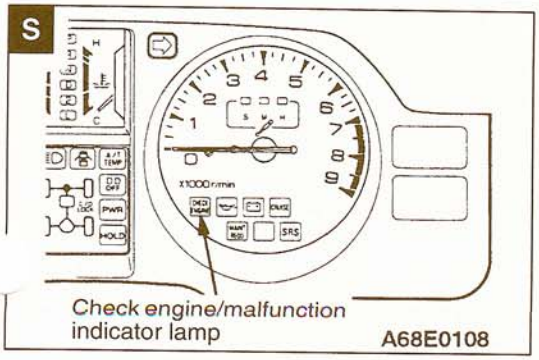
Check engine/malfunction indicator lamp
A68E0108

T

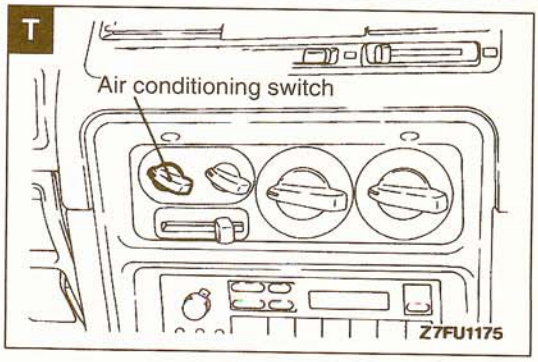
Air conditioning switch
Z7FU1175

U

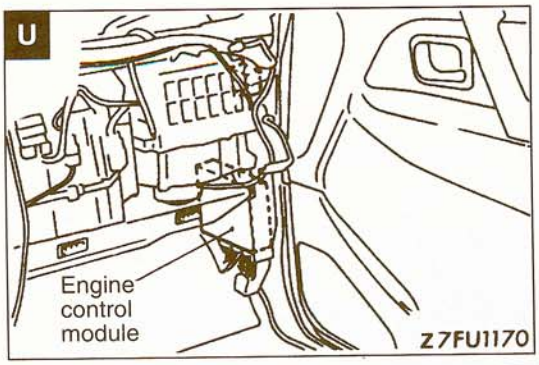


V

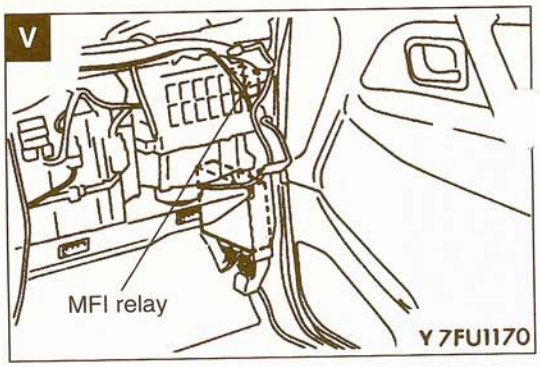


W <Federal>

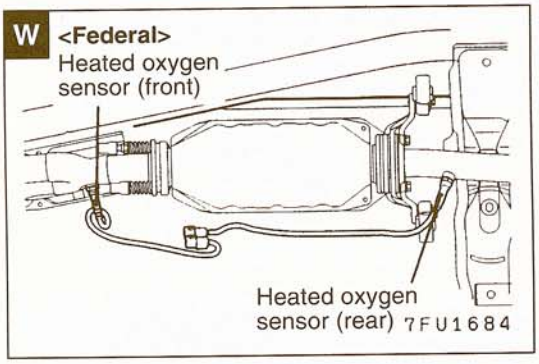


X <California>

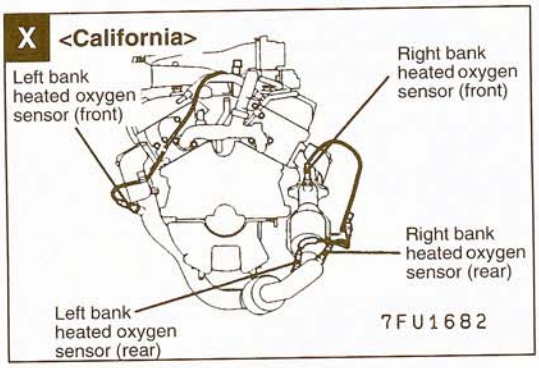


Y

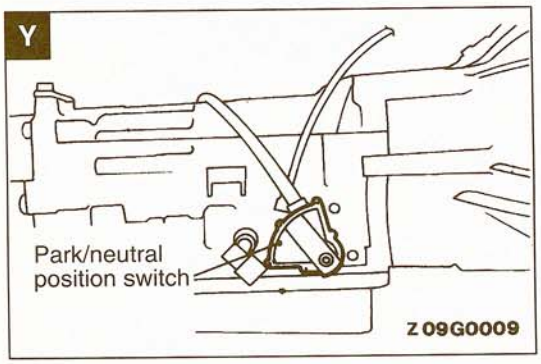


Z <California>

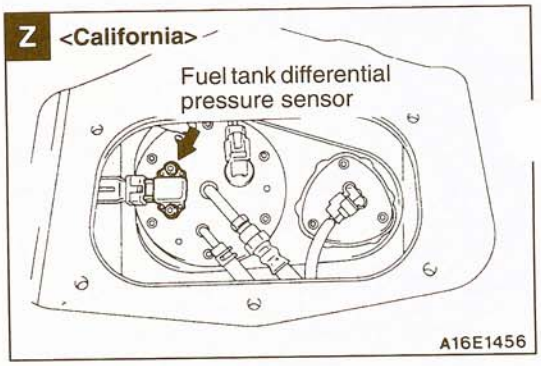

## COMPONENT LOCATION <DOHC>

13110130061

| Name | Symbol | Name | Symbol |
|---|---|---|---|
| Air conditioning compressor clutch relay | K | Ignition coil (Ignition power transistor) | Q |
| | | Ignition timing adjustment connector | C |
| Air conditioner switch | V | Injector | H |
| Camshaft position sensor | R | Manifold differential pressure sensor | F |
| Check engine/malfunction indicator lamp | U | Multiport fuel injection (MFI) relay | X |
| Crankshaft position sensor | P | Park/Neutral position switch | G |
| Data link connector | S | Power steering pressure switch | M |
| EGR solenoid | A | Throttle position sensor (with built-in closed throttle position switch) | E |
| Engine control module | W | | |
| Engine coolant temperature sensor | N | Variable induction control solenoid | O |
| Evaporative emission purge solenoid | J | Vehicle speed sensor | T |
| Fuel pump check connector | D | Volume air flow sensor (with built-in intake air temperature sensor and barometric pressure sensor) | L |
| Heated oxygen sensor | I | | |
| Idle air control motor | B | | |

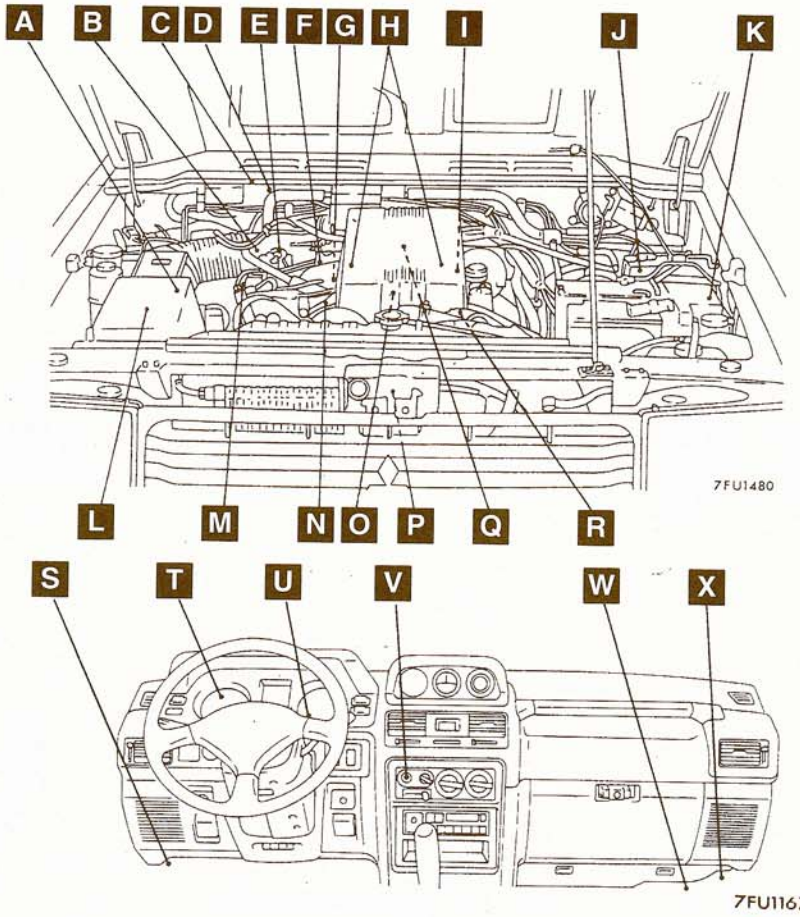


7FU1873

A

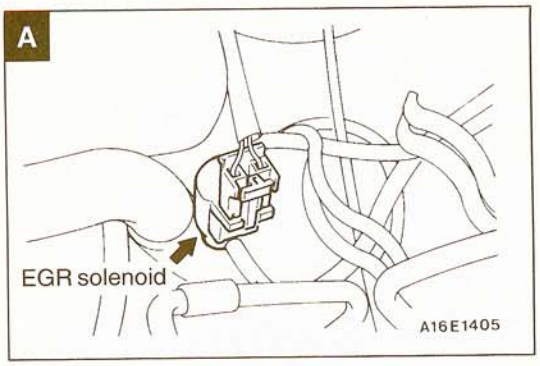


B

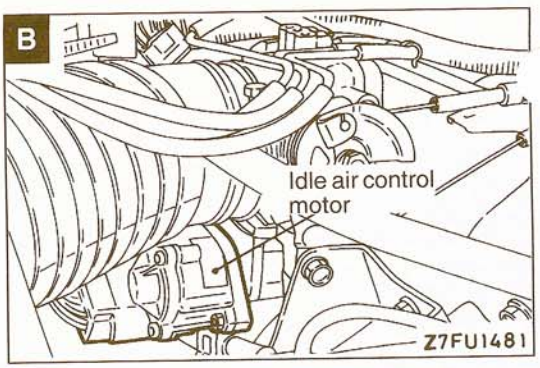


C

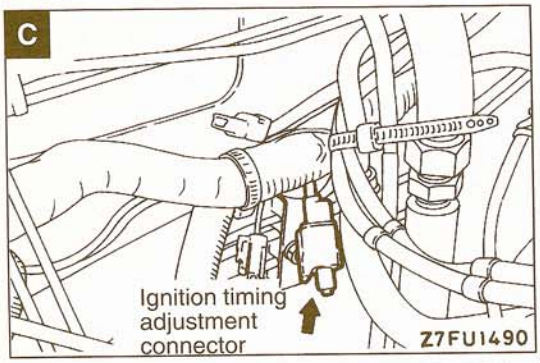


D

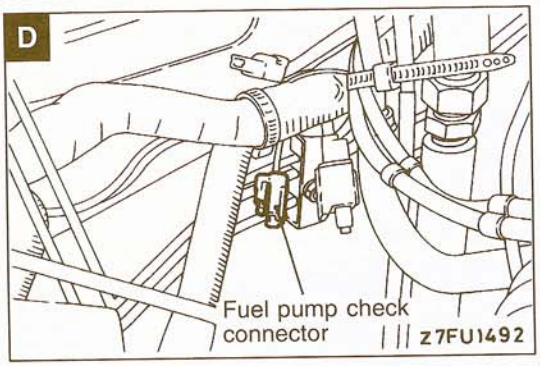


E

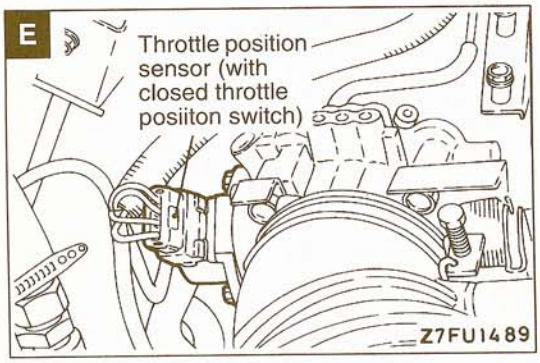


F

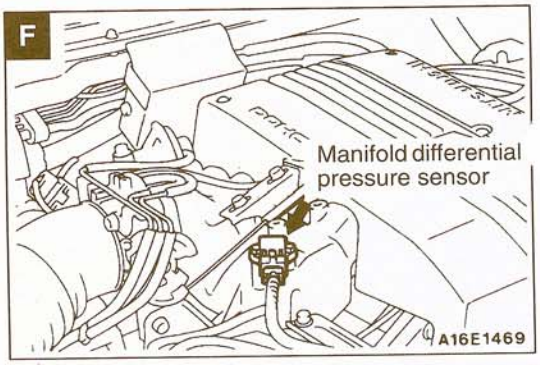


G

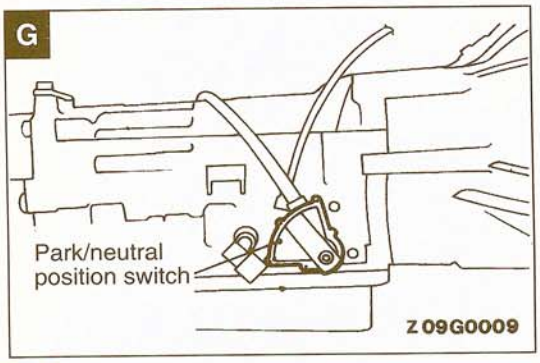


H

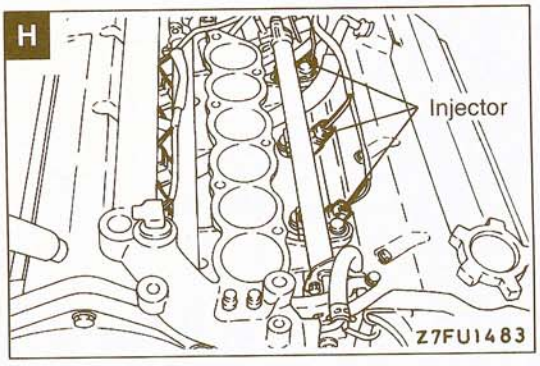


I

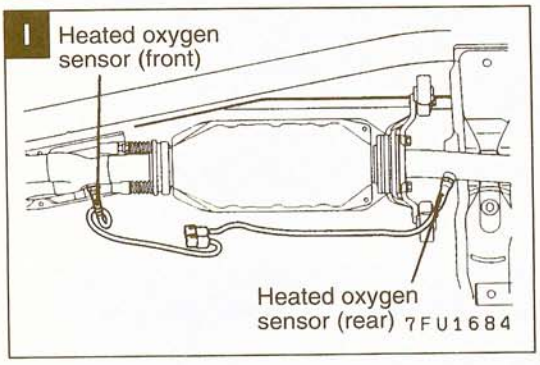


J

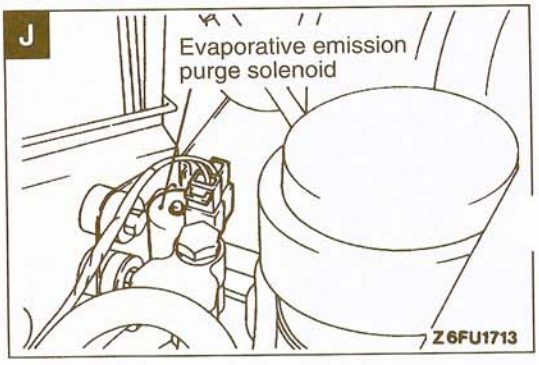


TSB Revision

K

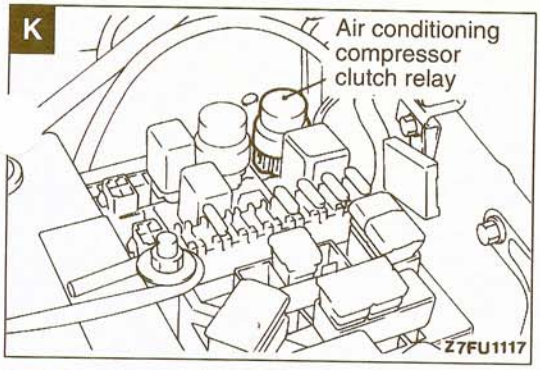
Air conditioning compressor clutch relay
Z7FU1117

L

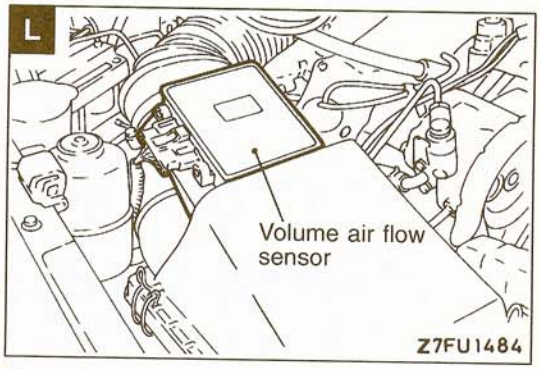
Volume air flow sensor
Z7FU1484

M

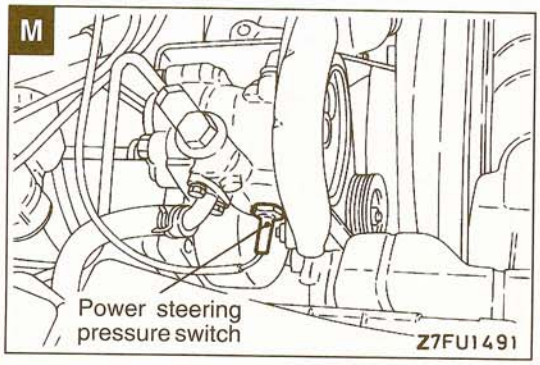
Power steering pressure switch
Z7FU1491

N

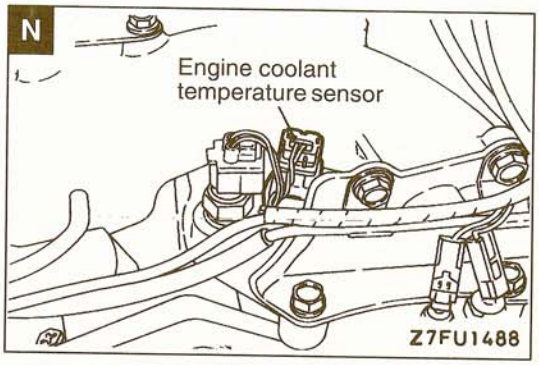
Engine coolant temperature sensor
Z7FU1488

O

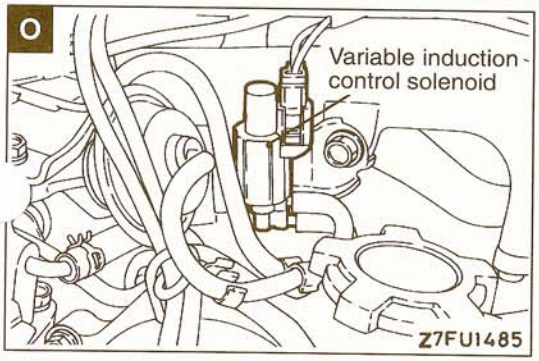
Variable induction control solenoid
Z7FU1485

P

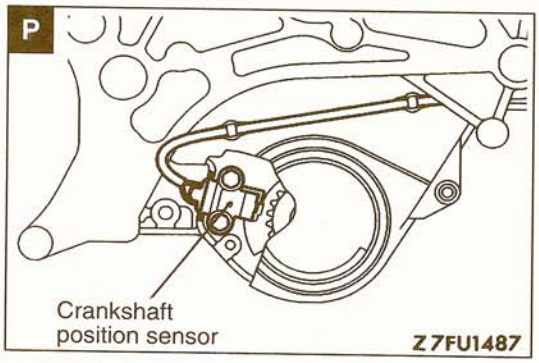
Crankshaft position sensor
Z7FU1487

Q

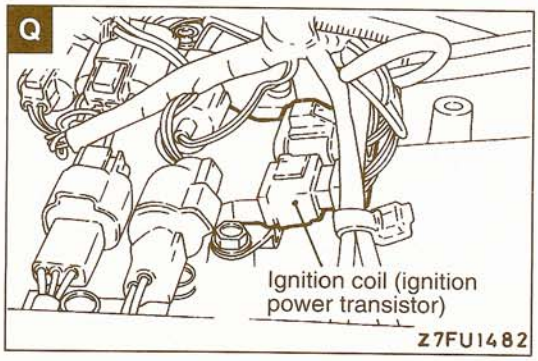
Ignition coil (ignition power transistor)
Z7FU1482

R

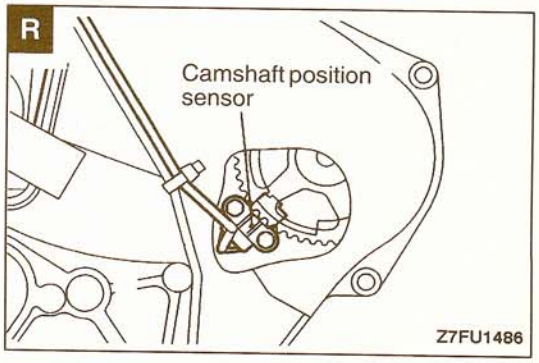
Camshaft position sensor
Z7FU1486

S

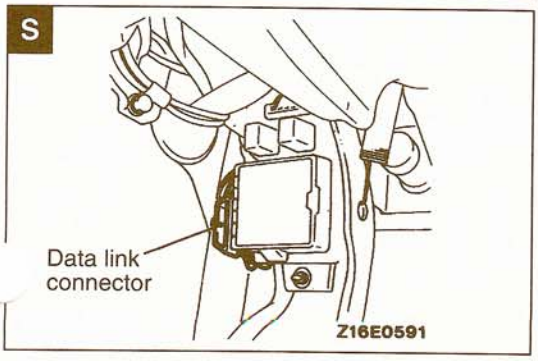
Data link connector
Z16E0591

T

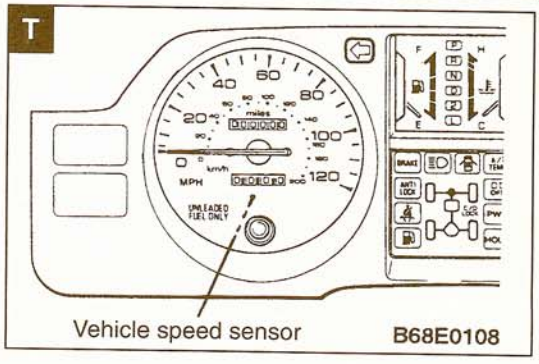
Vehicle speed sensor
B68E0108

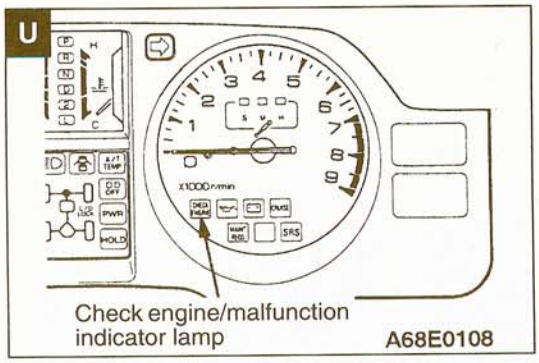


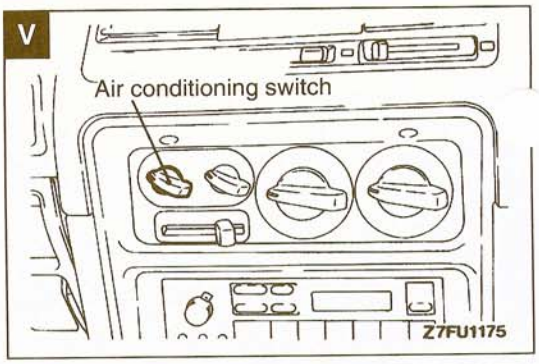


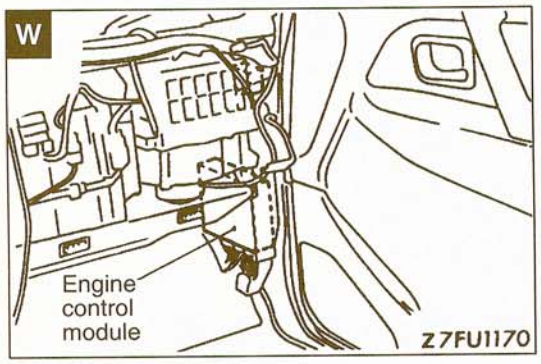


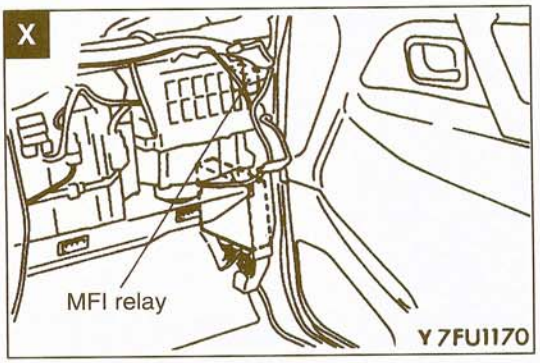


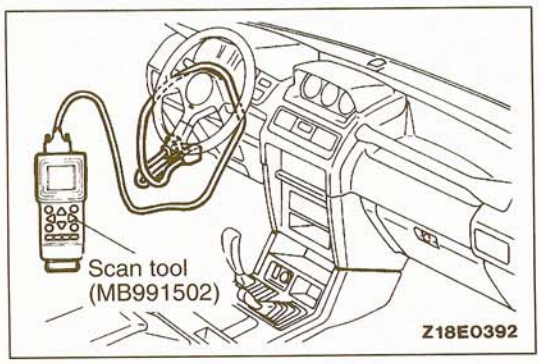


## COMPONENT INSPECTION PROCEDURE

13110140033

### USING SCAN TOOL

(1) Check by the data reading and actuator test functic
If any abnormality is found, check the body harnes components, etc., and repair as necessary.
(2) After repairing, check again with the scan tool to make sure that the input and output signals are now normal.
(3) Erase the diagnostic trouble code.
(4) Disconnect the scan tool.
(5) Start the engine and perform running test, etc. to make sure that the troubles have been corrected.

## POWER SUPPLY (MFI RELAY) AND IGNITION SWITCH-IG

13110150036

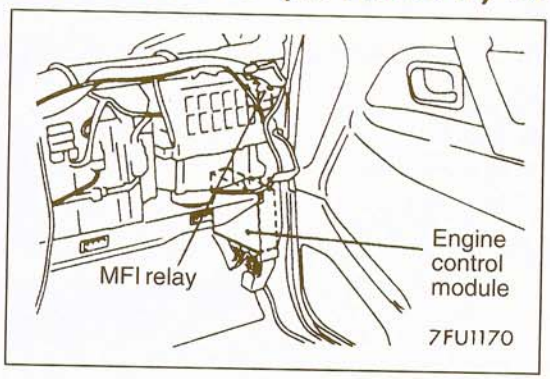


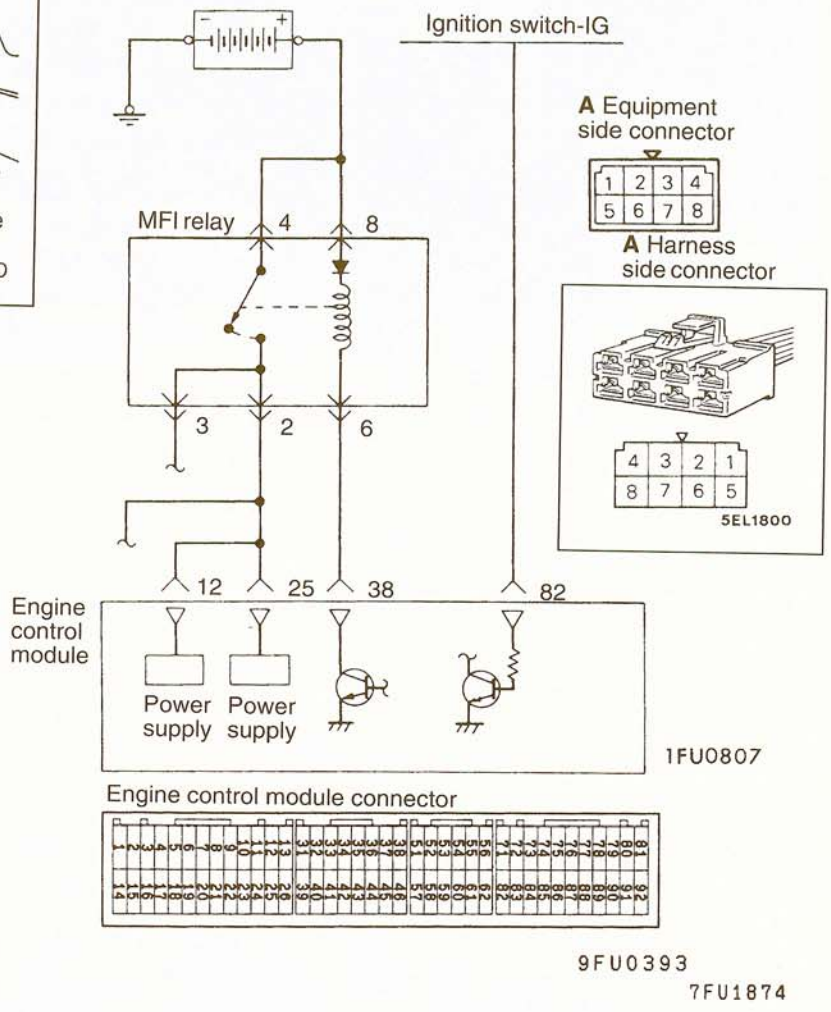


### OPERATION

- While the ignition switch is ON, battery positive voltage is supplied to the engine control module, injectors, volume air flow sensor, etc.
- When the ignition switch is turned to the ON position, battery positive voltage is supplied from the ignition switch to the engine control module. When battery positive voltage is supplied to the engine control module, the power transistor is switched ON and current flows to the MFI relay coil.
- As a result, the MFI relay switch is switched ON, and power is supplied, by way of the MFI relay switch, from the battery to the engine control module.

### INSPECTION

#### Using Scan Tool

| Function | Item No. | Data display | Check conditions | Standard value V |
|---|---|---|---|---|
| Data reading | 16 | Engine control module power supply voltage | Ignition switch: ON | B+ |

**TSB Revision**

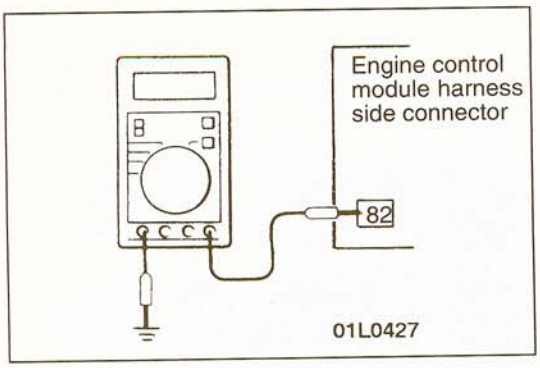


## HARNESS INSPECTION

**STEP 1. Measure the ignition switch-IG terminal input voltage.**

- Engine control module connector: Disconnected

**Voltage (V):**
**0 – 1 (Ignition switch: OFF)**
**Battery positive voltage (Ignition switch: ON)**

**OK: GO TO STEP 2**

**NG: Repair the harness. (82 – Ignition switch or inspect the ignition switch.)**

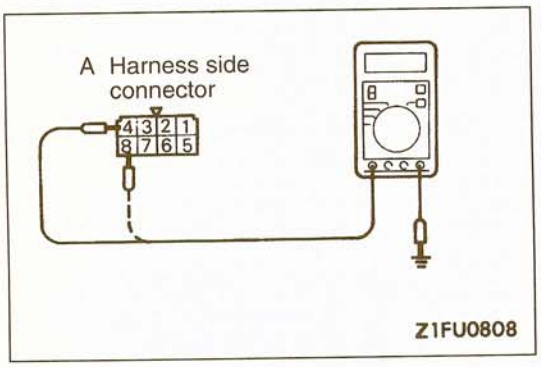


**STEP 2. Measure the power supply voltage of the MFI relay.**

- Ignition switch: OFF
- MFI relay connector: Disconnected

**Voltage (V): Battery positive voltage**

**OK: GO TO STEP 3**

**NG: Repair the harness. (A4 – Battery, A8 – Battery)**

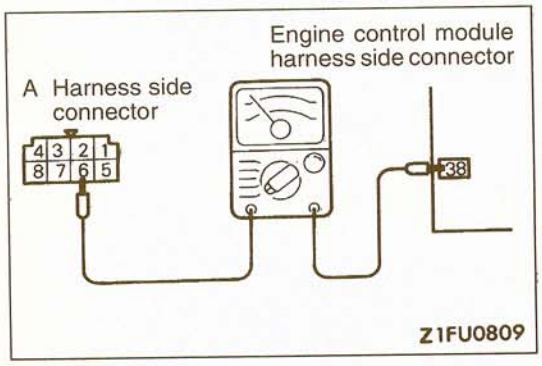


**STEP 3. Check for an open circuit or a short-circuit to ground between the MFI relay and the engine control module.**

- Engine control module connector: Disconnected
- MFI relay connector: Disconnected

**OK: GO TO STEP 4**

**NG: Repair the harness. (A6 – 38)**

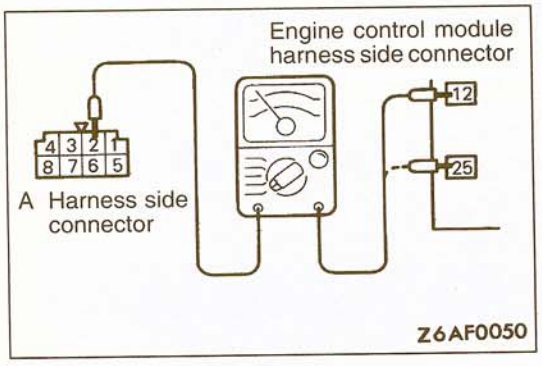


**STEP 4. Check for an open circuit or a short-circuit to ground between the MFI relay and the engine control module.**

- MFI relay connector: Disconnected
- Engine control module connector: Disconnected

**OK: GO TO STEP 5**

**NG: Repair the harnesses. (A2 – 12, A2 – 25)**

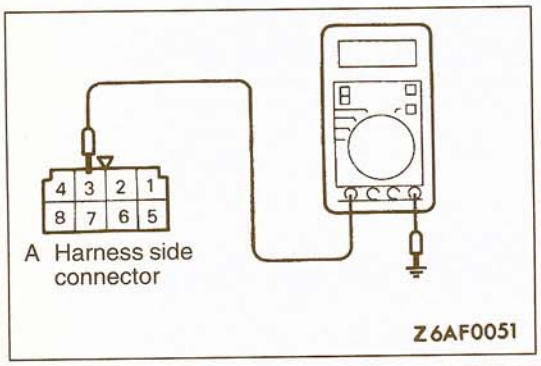


**STEP 5. Measure the power supply voltage of the actuator.**

- MFI relay connector: Connected
- Engine control module connector: Connected

**Voltage (V):**
**8 or higher (Engine: Cranking)**
**Battery positive voltage (Engine: Racing)**

**OK: STOP**

**NG: MFI relay or engine control module is defective.**

**TSB Revision**

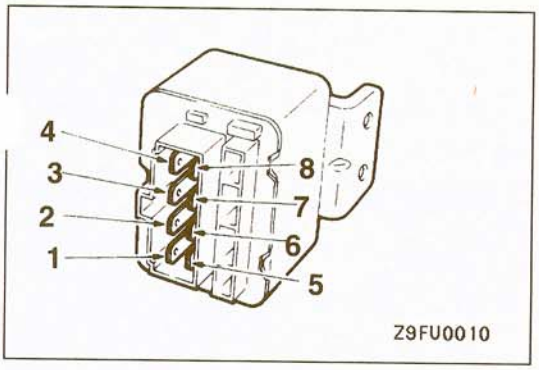


## RELAY INSPECTION

### Multiport Fuel Injection (MFI) Relay Check

(1) Remove the MFI relay.
(2) Check for continuity between the MFI relay terminals.

| Inspection terminals | Continuity |
|---|---|
| (5)–(7) | Continuity |
| (6)–(8) | Continuity in one direction |

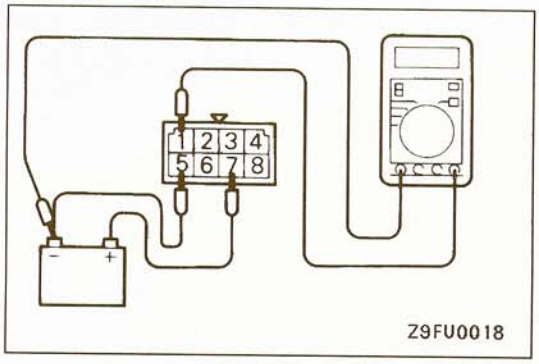


(3) Use jumper wires to connect MFI relay terminal (7) to the positive battery terminal and terminal (5) to the negative battery terminal.

**Caution**
**When connecting the jumper wires, be careful not to mistake the connection terminals, as damage to the relay will result.**

(4) Check the voltage at MFI relay terminal (1) while connecting and disconnecting the jumper wire at the negative battery terminal

| Jumper wire | Voltage at terminal (1) |
|---|---|
| Connected | B+ |
| Disconnected | 0 V |

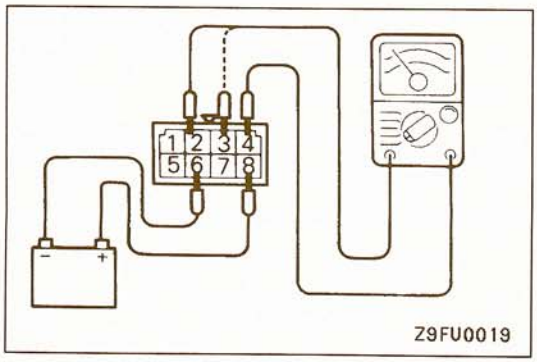


(5) Use the jumper wires to connect MFI relay terminal (8) to the positive battery terminal and terminal (6) to the negative battery terminal.
(6) Check for continuity between MFI relay terminals (2)–(4) and terminals (3)–(4) while connecting and disconnecting the jumper wire at the negative battery terminal.

| Jumper wire | Continuity between terminals (2)–(4) | Continuity between terminals (3)–(4) |
|---|---|---|
| Connected | Continuity (0 Ω) | Continuity (0 Ω) |
| Disconnected | No continuity (Infinite resistance) | No continuity (Infinite resistance) |

(7) If there is an incorrect condition, replace the MFI relay.

## ENGINE CONTROL MODULE POWER GROUND

13110160039

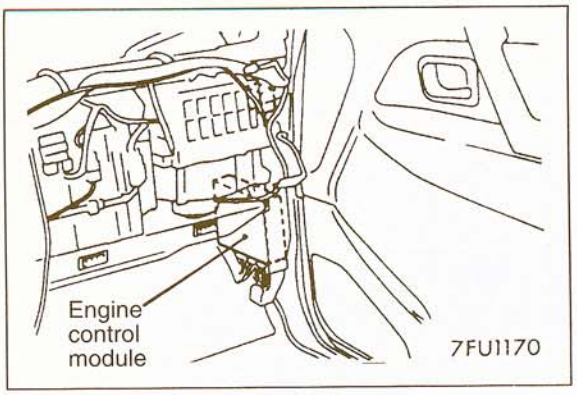


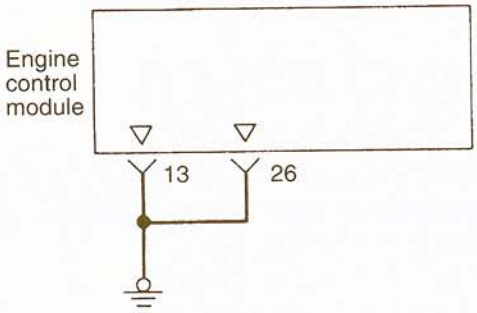


01A0191

Engine control module connector

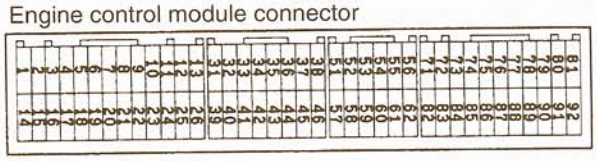

9FU0393

7FU1875

### OPERATION

Grounds of the engine control module.

### TROUBLESHOOTING HINTS

If there is incorrect or incomplete contact of the engine control module's ground line, the engine control module will not function correctly.

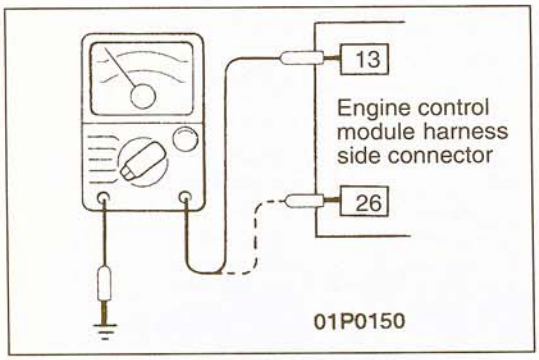


### HARNESS INSPECTION

**STEP 1. Check for continuity in the ground circuit.**

- Engine control module connector: Disconnected

**OK: STOP**

**NG: Repair the harnesses. (13 – Ground, 26 – Ground)**

## FUEL PUMP

13110170032

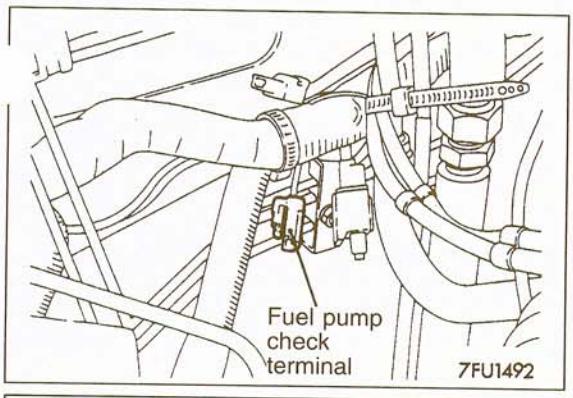


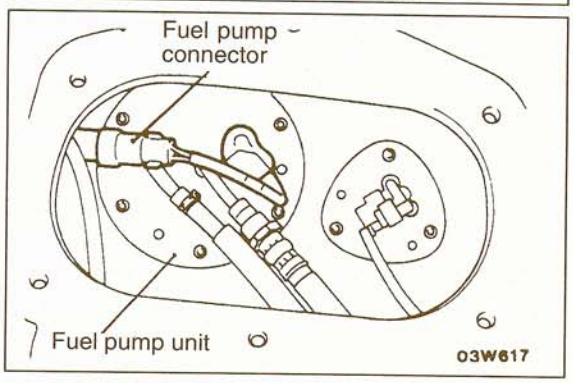


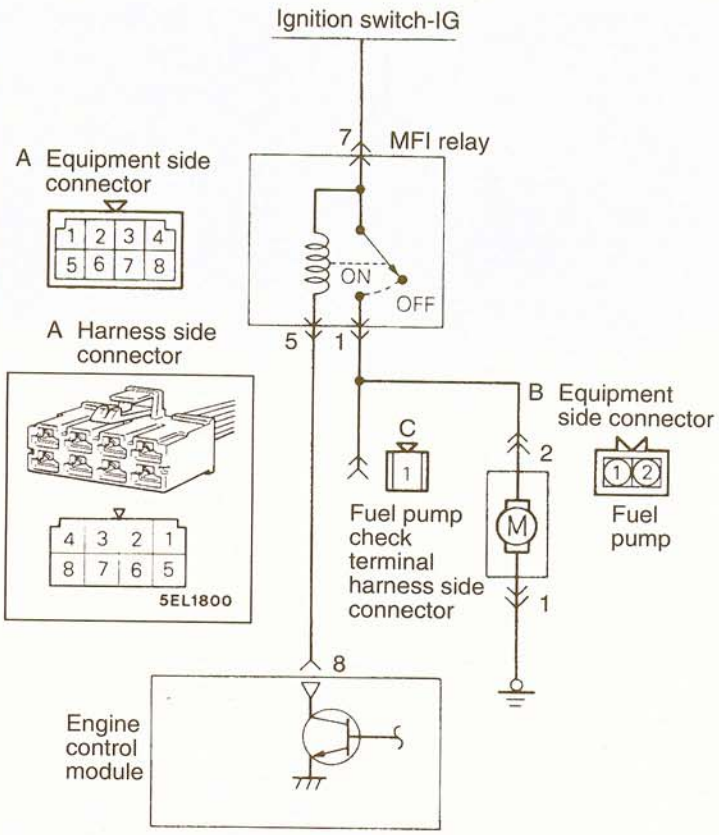


Engine control module connector

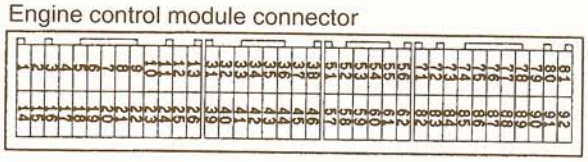

9FU0393

7FU1876

### OPERATION

- The fuel pump is driven when the engine is cranking and while the engine is running.
- When the engine is cranking and while the engine is running, the engine control module turns the power transistor ON to supply power to the MFI relay coil. This causes the MFI relay switch to turn ON, and current is supplied from the ignition switch via the MFI relay switch to drive the fuel pump.

### INSPECTION

#### Using Scan Tool

| Function | Item No. | Activation | Check conditions | Check description | Normal condition |
|---|---|---|---|---|---|
| Actuator test | 07 | Activates the fuel pump and circulates the fuel. | • Engine cranking<br>• Fuel pump forced activation<br>Make the check under both of the above conditions. | Pinch the return hose and feel the pulsations of the fuel flow. | Pulsations can be felt. |
| | | | | Listen close to the fuel tank for the sound of the pump operating. | Sound can be heard. |

**TSB Revision**

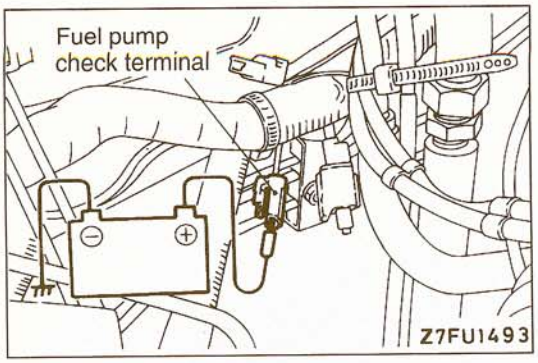


## HARNESS INSPECTION

**STEP 1. Check the fuel pump.**

- Apply battery positive voltage to the checking termir and operate the pump.

**OK: GO TO STEP 2**

**NG: GO TO STEP 4**

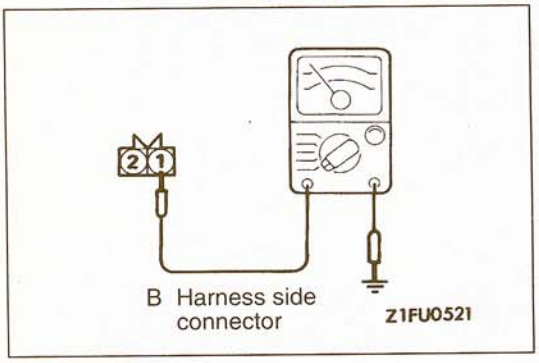


**STEP 2. Check the ground circuit of the fuel pump.**

- Fuel pump connector: Disconnected

**OK: GO TO STEP 3**

**NG: Repair the harness. (B1 – Ground)**

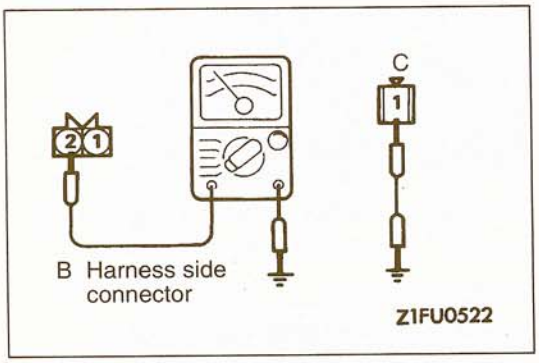


**STEP 3. Check for continuity between the fuel pump and the checking terminal.**

- Fuel pump connector: Disconnected
- MFI relay connector: Disconnected

**OK: GO TO STEP 4**

**NG: Repair the harness. (B2 – C1)**

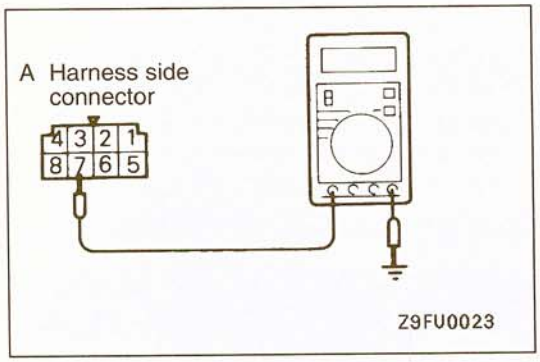


**STEP 4. Measure the power supply voltage of the MFI relay.**

- MFI relay connector: Disconnected

**Voltage (V):**
**0 (ignition switch: OFF)**
**Battery positive voltage (ignition switch: ON)**

**OK: GO TO STEP 5**

**NG: Repair the harness. (A7 – Ignition switch-IG) or check the ignition switch.**

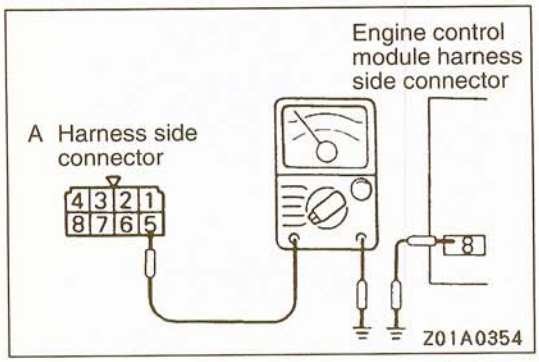


**STEP 5. Check for an open circuit or a short-circuit to ground between the MFI relay and the engine control module.**

- MFI relay connector: Disconnected
- Engine control module connector: Disconnected

**OK: GO TO STEP 6**

**NG: Repair the harness. (A5 – 8)**

TSB Revision

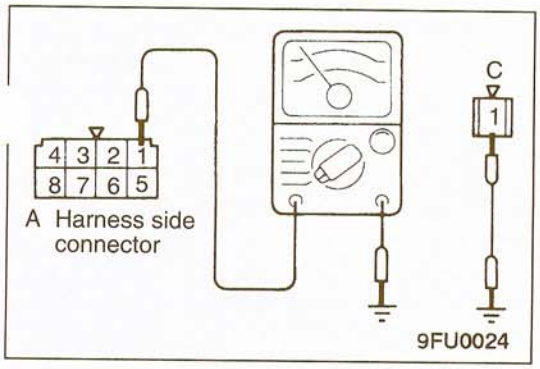


**STEP 6. Check for continuity between the fuel pump and the checking terminal.**

- Fuel pump connector: Disconnected
- MFI relay connector: Disconnected

**OK: GO TO STEP 7**

**NG: Repair the harness. (A1 – C1)**

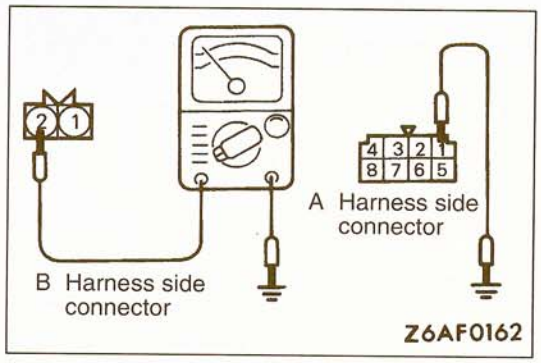


**STEP 7. Check for an open circuit or a short-circuit to ground between the MFI relay and the fuel pump.**

- MFI relay connector: Disconnected
- Fuel pump connector: Disconnected

**OK: GO TO STEP 8**

**NG: Repair the harness. (A1 – B2)**

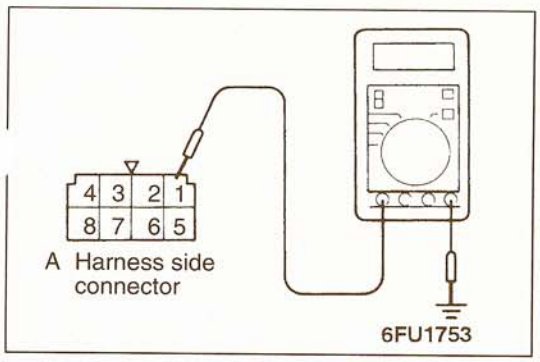


**STEP 8. Measure the power supply voltage of the fuel pump.**

- MFI relay connector: Connected
- Engine control module connector: Connected

**Voltage (V):**
**8 or higher (engine: Cranking)**
**Battery positive voltage (engine: Racing)**

**OK: STOP**

**NG: MFI relay or engine control module is defective.**

## RELAY INSPECTION

**Multiport Fuel Injection (MFI) Relay Check**

Refer to P.13A-65.

**Fuel Pump Check**

Refer to GROUP 13F – On-vehicle Service.

## VOLUME AIR FLOW SENSOR

13110180035

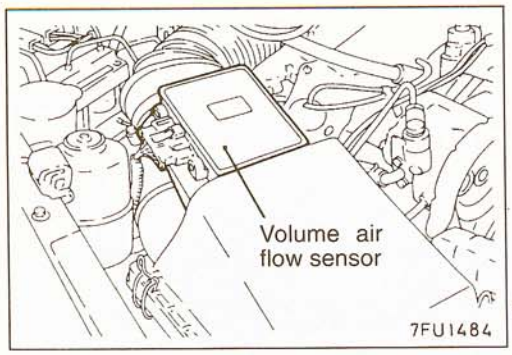


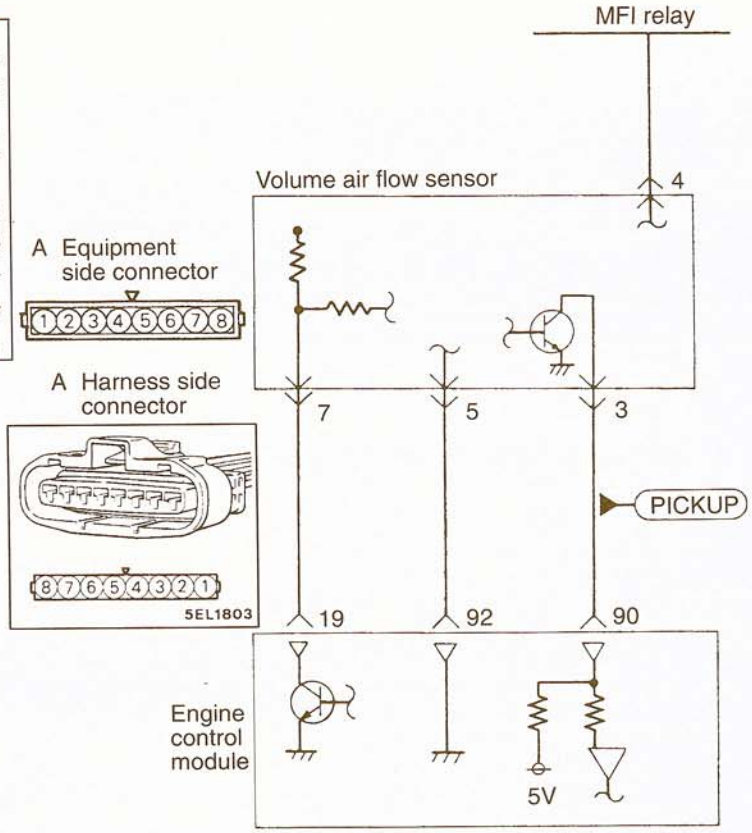


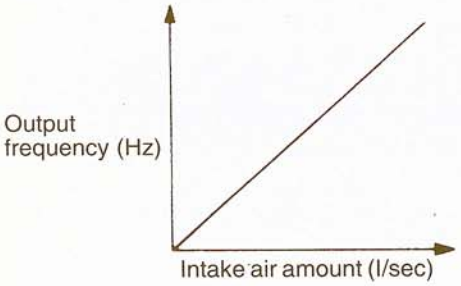


7FU0654

Engine control module connector

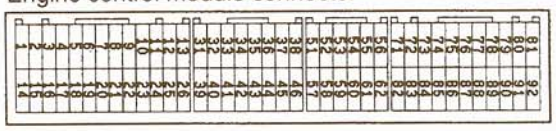

9FU0393

7FU1877

### OPERATION

- The volume air flow sensor is incorporated within the air cleaner, it functions to convert the amount of engine air intake to pulse signals of a frequency proportional to the amount of engine air intake, and to input those signals to the engine control module. The engine control module then, based upon those signals, calculates the amount of fuel injection, etc.
- The power for the volume air flow sensor is supplied from the MFI relay to the volume air flow sensor, and is grounded at the engine control module. The volume air flow sensor, by intermitting the flow of the 5 V voltage applied from the engine control module, produces pulse signals.

### TROUBLESHOOTING HINTS

Hint 1:
If the engine sometimes stalls, try starting the engine and shaking the volume air flow sensor harness. If the engine then stalls, incorrect or improper contact of the volume air flow sensor connector is the probable cause.

Hint 2:
If the volume air flow sensor output frequency is any value other than zero when the ignition switch is switched ON (but the engine is not started), a malfunction of the volume air flow sensor or of the engine control module is the probable cause.

**TSB Revision**

Hint 3:
If idling is possible even though the volume air flow sensor output frequency is outside the standard value, the cause is usually a malfunction other than of the volume air flow sensor.

[Examples]
(1) The flow of air within the volume air flow sensor is disturbed. (Air duct disconnection or clogged air cleaner element.)
(2) Incomplete combustion inside a cylinder (Malfunction of spark plugs, ignition coil, injectors, compression pressure, etc.)
(3) Air is drawn into the intake manifold through a leaking gasket, etc.

## INSPECTION

### Using Scan Tool
### <Volume air flow sensor>

| Function | Item No. | Data display | Check conditions | Engine conditions | Standard value |
|---|---|---|---|---|---|
| Data reading | 12 | Frequency (Mass air flow rate) | • Engine coolant temperature: 80 – 95°C (176 – 203°F)<br>• Lights and all accessories: OFF<br>• Transmission: Neutral (P range for vehicles with A/T) | Idling | 20 – 46 Hz (3.6 – 6.9 g/s) <SOHC-12 valve engine><br>25 – 51 Hz (3.7 – 7.6 g/s) <SOHC-24 valve engine><br>29 – 55 Hz (4.3 – 8.2 g/s) <DOHC> |
| | | | | 2,500 r/min | 73 – 113 Hz (10.9 – 16.8 g/s) <SOHC-12 valve engine><br>80 – 120 Hz (11.9 – 17.9 g/s) <SOHC-24 valve engine><br>91 – 131 Hz (13.6 – 19.5 g/s) <DOHC> |
| | | | | Racing | Frequency (or air flow volume) increases by racing. |

NOTE
When the vehicle is new [driven approximately 500 km (300 miles) or less], the volume air flow sensor output frequency may be approximately 10% higher than indicatedr above.

### <Volume air flow sensor reset signal>

| Function | Item No. | Data display | Inspection condition | Engine state | Normal display |
|---|---|---|---|---|---|
| Data list | 34 | Reset signal condition | • Engine warming up | Idling | ON |
| | | | | 2,500 r/min | OFF |

### <Volumetric efficiency>

| Function | Item No. | Data display | Inspection condition | Engine condition | Standard value |
|---|---|---|---|---|---|
| Data list | 37 | Volumetric efficiency | • Engine coolant temperature: 80 – 95°C (176 – 203°F)<br>• Lights, electrical cooling fan and all accessories: OFF<br>• Transmission: Neutral (P range for vehicles with A/T) | Idling | 15–35% |
| | | | | 2,500 r/min | 15–35% |
| | | | | Racing | Volumetric efficiency increases according to amount of racing. |

**<Calculation load value>**

| Function | Item No. | Data display | Check conditions | Engine conditions | Standard value |
|---|---|---|---|---|---|
| Data reading | 87 | Calculation load value | • Engine: Warm<br>• Operating range (from idle to maximum output) | Idling | 15 – 35 % |
| | | | | 2,500 r/min | 15 – 35 % |

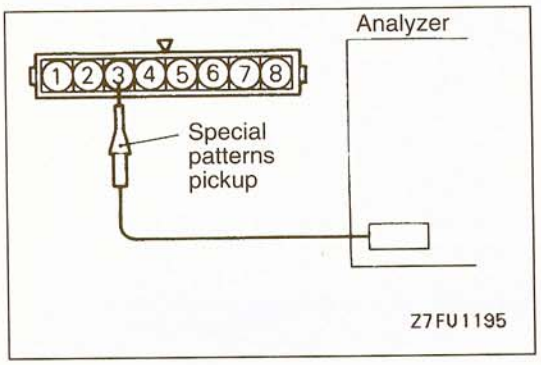


**Wave Pattern Inspection Using an Analyzer**

**Measurement method**

(1) Disconnect the volume air flow sensor connector, and connect the special tool (test harness: MB991348) in between. (All terminals should be connected.)
(2) Connect the analyzer special patterns pickup to terminal (3) of the volume air flow sensor connector.

**Alternative method (when test harness is not available)**

Connect the analyzer special patterns pickup to ECM terminal (90).

**Standard wave pattern**

Observation conditions

| Function | Special patterns |
|---|---|
| Pattern height | Low |
| Pattern selector | Display |
| Engine r/min | Idling |

Standard wave pattern

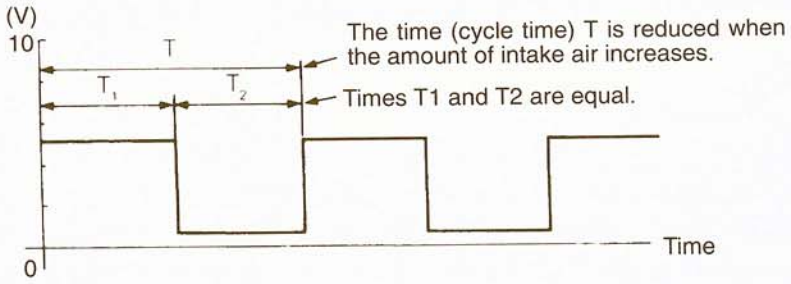


**TSB Revision**

Observation conditions (Pattern changes with engine speed changes)

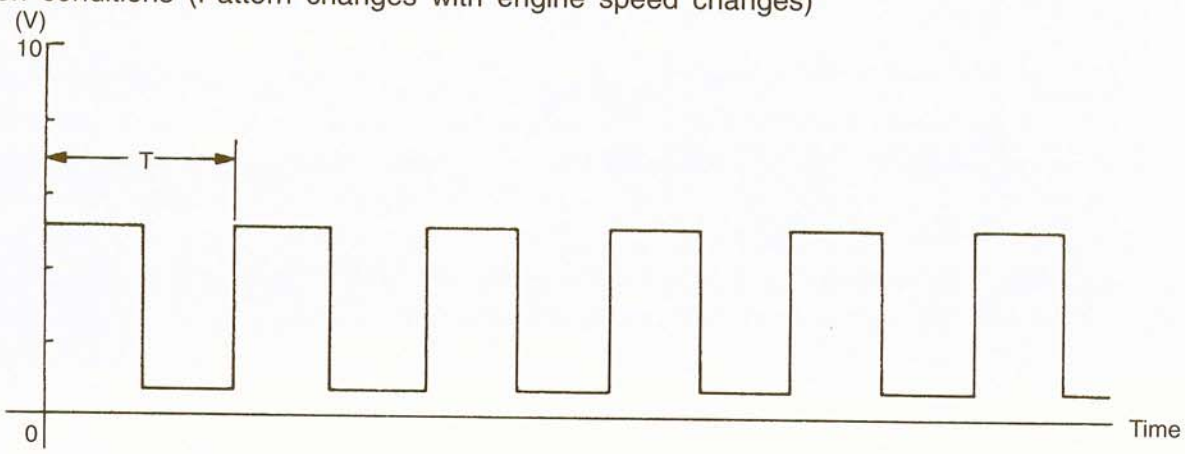


Z7FU0880

**Wave pattern observation points**

Check that cycle time T becomes shorter and the frequency increases when the engine speed is increased.

**Examples of abnormal wave patterns**

- Example 1

  **Cause of problem**
  Malfunction of sensor interface

  **Wave pattern characteristics**
  Rectangular wave pattern is output even when the engine is not started.

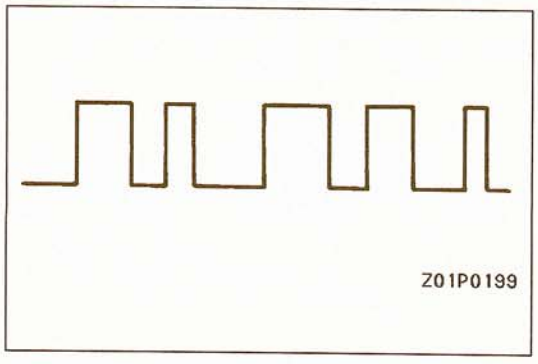

Z01P0199

- Example 2

  **Cause of problem**
  Damaged rectifier or vortex generation column

  **Wave pattern characteristics**
  Unstable wave pattern with non-uniform frequency. However, when an ignition leak occurs during acceleration, the wave pattern will be distorted temporarily, even if the volume air flow sensor is normal.

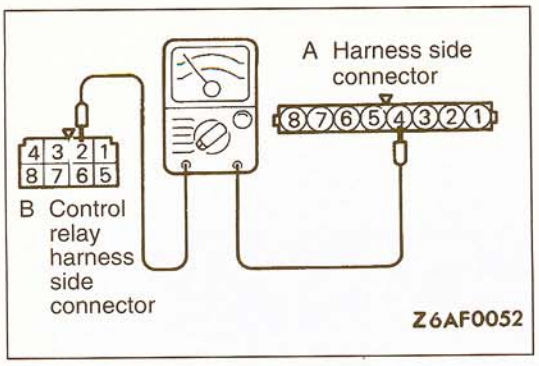


## HARNESS INSPECTION

**STEP 1. Check for continuity between the volume air flow sensor and the MFI relay.**

- MFI relay connector: Disconnected
- Volume air flow sensor connector: Disconnected

NOTE
- Touch the ohmmeter probes to both ends of the harness.

**OK: GO TO STEP 2**

**NG: Repair the harness. (A4 – B2)**

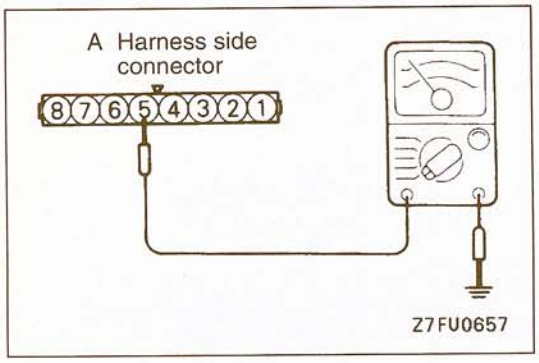


**STEP 2. Check for continuity in the ground circuit.**

- Volume air flow sensor connector: Disconnected

**OK: GO TO STEP 3**

**NG: Repair the harness. (A5 – 92)**

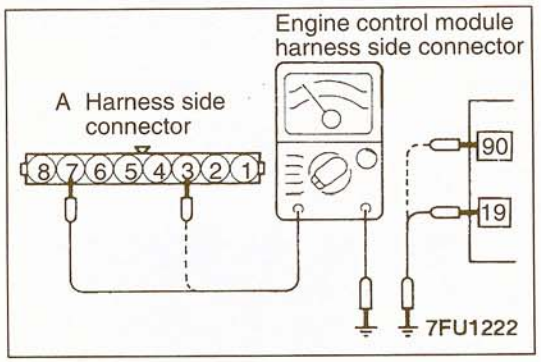


**STEP 3. Check for an open or short-circuit between the volume air flow sensor and the engine control module.**

- Volume air flow sensor connector: Disconnected
- Engine control module connector: Disconnected

**OK: GO TO STEP 4**

**NG: Repair the harness. (A3 – 90, A7 – 19)**

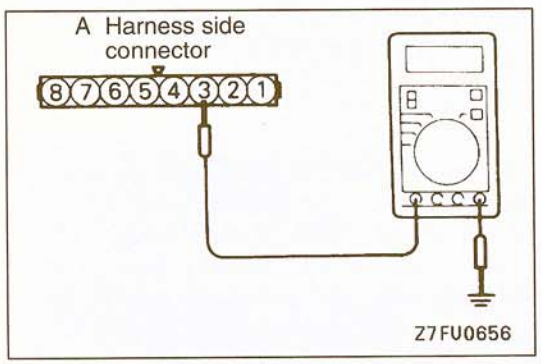


**STEP 4. Measure the applied voltage**

- Volume air flow sensor connector: Disconnected
- Engine control module connector: Connected
- Ignition switch: ON

**Voltage (V): 4.8 – 5.2**

**OK: STOP**

**NG: Replace the engine control module.**

## INTAKE AIR TEMPERATURE SENSOR

13110190038

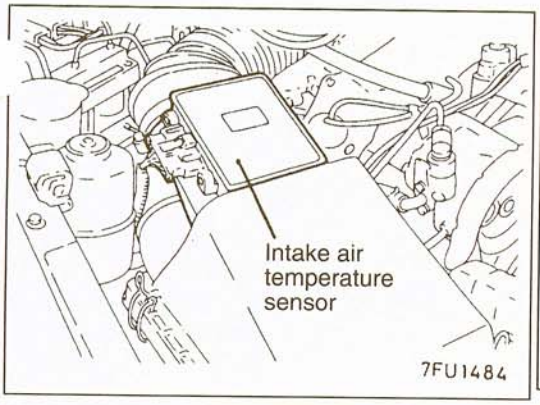


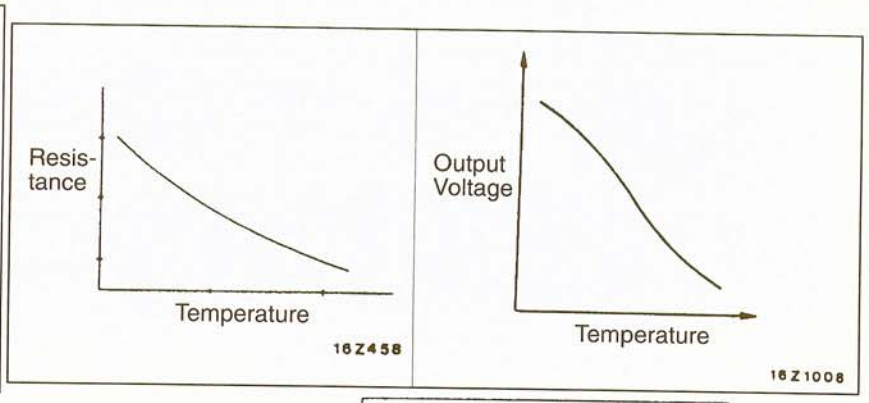


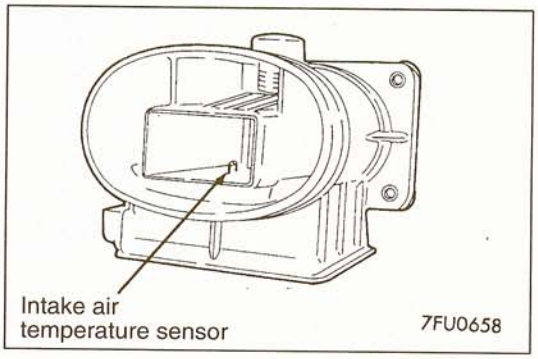


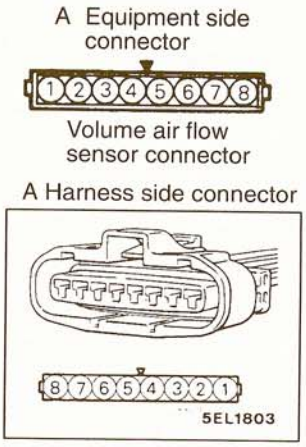


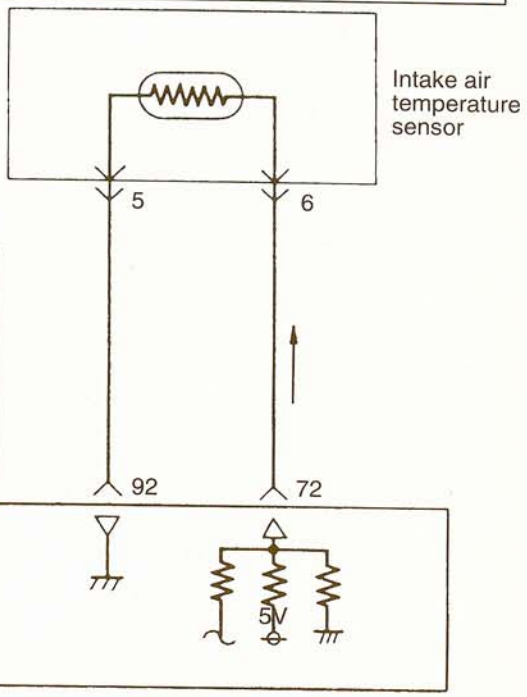


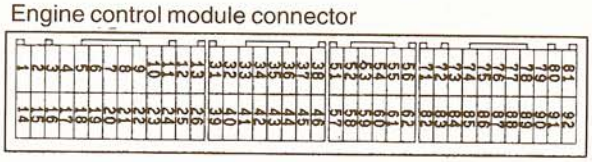


7FU1878

### OPERATION

- The intake air temperature sensor functions to convert the temperature of the air drawn into the engine to a voltage, and to input that voltage as a signal to the engine control module. The engine control module, based upon those signals, then corrects the amount to fuel injection, etc.
- The 5 V power supply within the engine control module is supplied, by way of the resistance within the unit, to the intake air temperature sensor, it passes through the intake air temperature sensor, which is a type of resistor, and is grounded as the engine control module. Note that the resistance of the intake air temperature sensor decreases when the temperature of the intake air increases.
- The intake air temperature sensor terminal voltage becomes higher when the resistance of the intake air temperature sensor increases, and becomes lower when the resistance decreases. Consequently, the intake air temperature sensor terminal voltage varies in accordance with the temperature of the intake air, becoming lower when the temperature of the intake air increases.

### TROUBLESHOOTING HINTS

Because the intake air temperature of the intake air in the air cleaner, it indicates a temperature different than the temperature of the outside air when the engine is running.

TSB Revision

## INSPECTION

### Using Scan Tool

| Function | Item No. | Data display | Check conditions | Intake air temperature °C (°F) | Standard valuE °C |
|---|---|---|---|---|---|
| Data reading | 13 | Sensor detection temperature | Ignition switch: ON or engine running | When –20 (–4) | –20 |
| | | | | When 0 (32) | 0 |
| | | | | When 20 (68) | 20 |
| | | | | When 40 (104) | 40 |
| | | | | When 80 (176) | 80 |

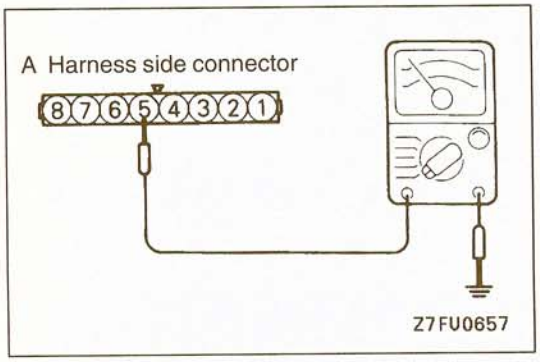


### HARNESS INSPECTION

**STEP 1. Check for continuity in the ground circuit.**

- Volume air flow sensor connector: Disconnected

**OK: GO TO STEP 2**

**NG: Repair the harness. (A5 – 92)**

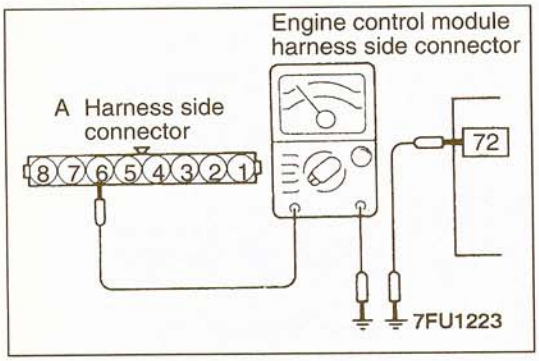


**STEP 2. Check for an open or short-circuit between the intake air temperature sensor and the engine control module.**

- Volume air flow sensor connector: Disconnected
- Engine control module connector: Disconnected

**OK: GO TO STEP 3**

**NG: Repair the harness. (A6 – 72)**

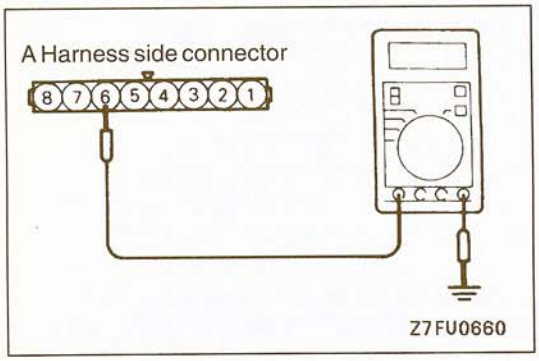


**STEP 3. Measure the power supply voltage.**

- Volume air flow sensor connector: Disconnected
- Ignition switch: ON
- Engine control module connector: Connected

**Voltage (V): 4.5 – 4.9**

**OK: STOP**

**NG: Replace the engine control module.**

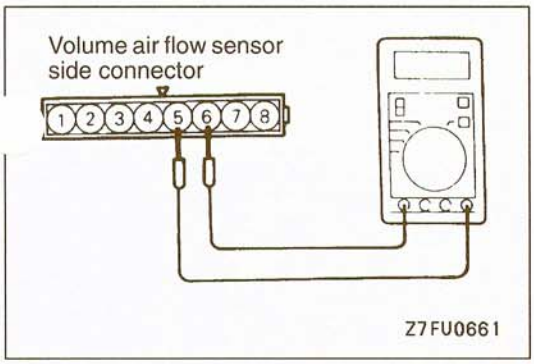


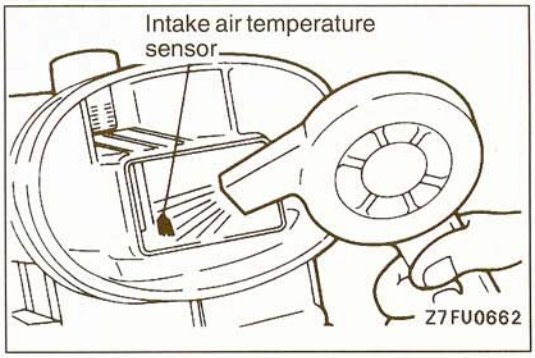


## SENSOR INSPECTION

(1) Disconnect the volume air flow sensor connectors.
(2) Measure the resistance between terminal (5) and terminal (6).

**Standard value:**

| Temperature °C (°F) | Resistance kΩ |
|---|---|
| 0 (32) | 6.0 |
| 20 (68) | 2.7 |
| 80 (176) | 0.4 |

(3) Measure the resistance while heating the sensor using a hair drier.

| Temperature °C (°F) | Resistance kΩ |
|---|---|
| Higher | Smaller |

(4) If resistance does not decrease as heat increases or the resistance remains unchanged, replace the volume air flow sensor assembly

## BAROMETRIC PRESSURE SENSOR

13110200038

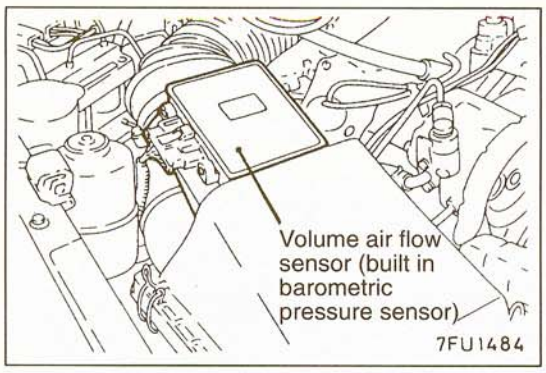


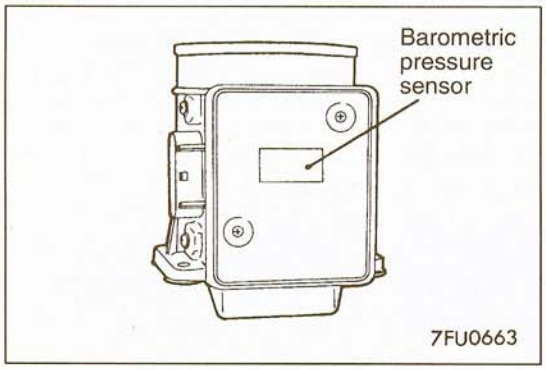


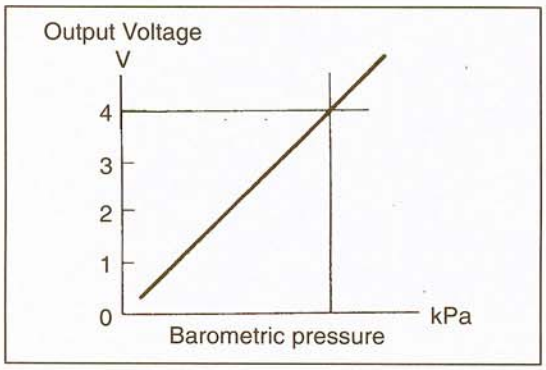


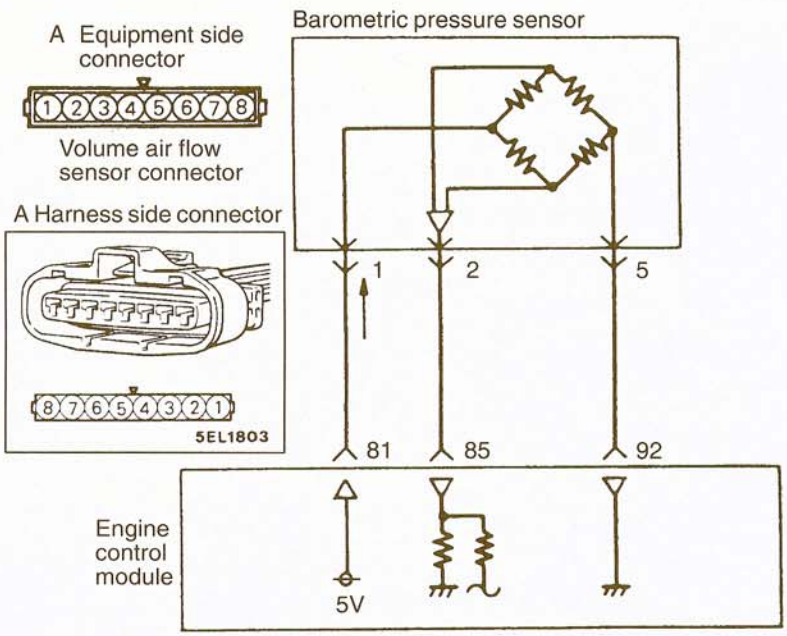


7FU0664

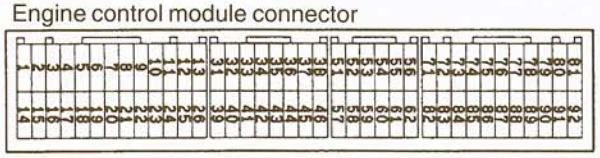


9FU0393

7FU1879

### OPERATION

- The barometric pressure sensor functions to convert the barometric pressure to voltage, and to input that voltage (as signals) to the engine control module. The engine control module based upon those signals, then corrects the amount of fuel injection, etc.
- The 5 V power supply within the engine control module is supplied to the barometric pressure sensor; it passes through the circuitry within the sensor, and is grounded at the engine control module.
- The barometric-pressure sensor output voltage is supplied to the engine control module in proportion to the barometric pressure (absolute pressure).

### TROUBLESHOOTING HINTS

Hint 1:
If there is a malfunction of the barometric pressure sensor, drivability of the vehicle will become worse, particularly at high altitudes.

Hint 2:
If, during high-speed driving, there is a noticeable sharp drop of the displayed pressure of the barometric-pressure sensor, check for clogging of the air cleaner.

## INSPECTION

### Using Scan Tool

| Function | Item No. | Data display | Check conditions | Altitude m (ft.) | Standard value kPa (mmHg) |
|---|---|---|---|---|---|
| Data reading | 25 | Sensor detection pressure | Ignition switch: ON | When at 0 (0) | 101 (760) |
| | | | | When at 600 (1,969) | 95 (710) |
| | | | | When at 1,200 (3,937) | 88 (660) |
| | | | | When at 1,800 (5,906) | 81 (610) |

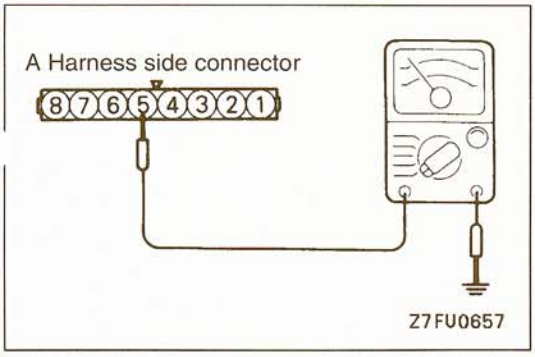


**HARNESS INSPECTION**

**STEP 1. Check for continuity in the ground circuit.**

- Volume air flow sensor connector: Disconnected

**OK: GO TO STEP 2**

**NG: Repair the harnesses. (A5 – 92)**

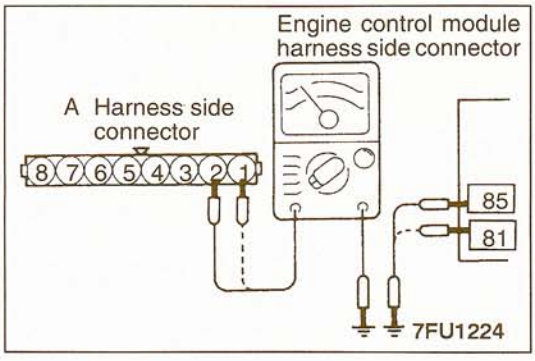


**STEP 2. Check for an open or short-circuit between the barometric pressure sensor and the engine control module.**

- Volume air flow sensor connector: Disconnected
- Engine control module connector: Disconnected

**OK: GO TO STEP 3**

**NG: Repair the harnesses. (A1 – 81, A2 – 85)**

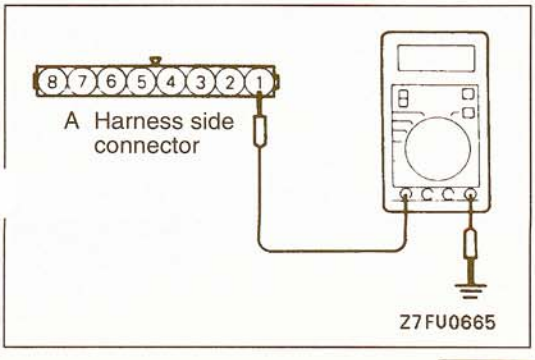


**STEP 3. Measure the power supply voltage of the barometric pressure sensor.**

- Volume air flow sensor connector: Disconnected
- Ignition switch: ON
- Engine control module connector: Connected

**Voltage (V): 4.8 – 5.2**

**OK: STOP**

**NG: Replace the engine control module.**

**TSB Revision**

## ENGINE COOLANT TEMPERATURE SENSOR

13110210031

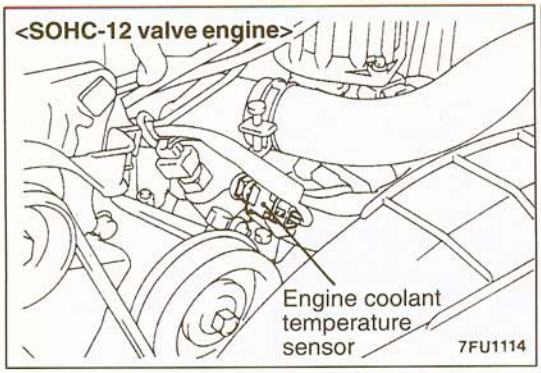


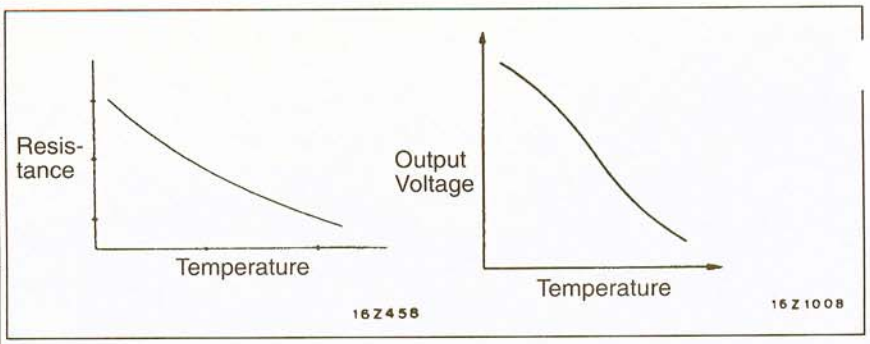


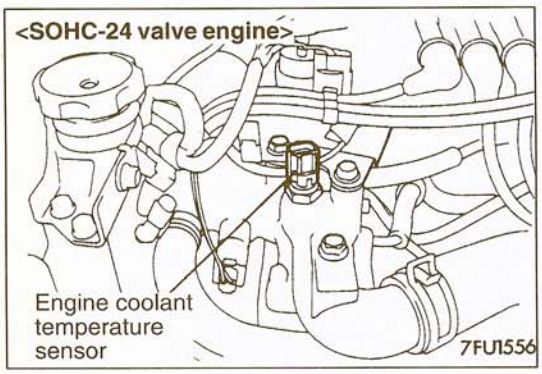


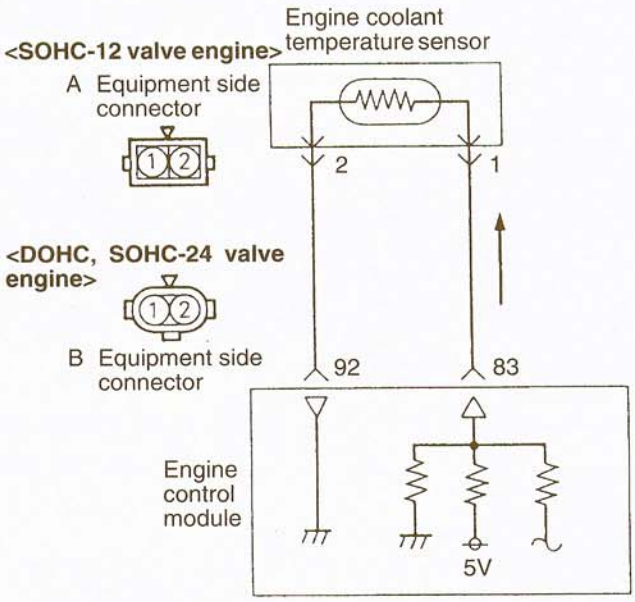


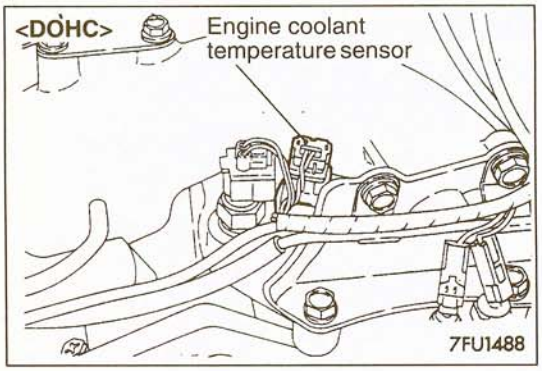


9FU0252

Engine control module

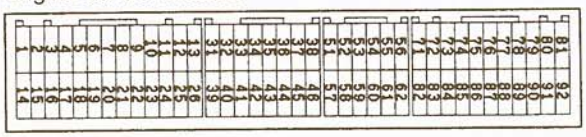

9FU0393

7FU1880

## OPERATION

- The engine coolant temperature sensor functions to convert the barometric pressure to voltage, and to input that voltage (as signals) to the engine control module. The engine control module, based upon those signals, regulates the amount of fuel injection and the fast-idling speed when the engine is cold.
- The 5 V power supply within the engine control module is supplied, by way of the resistance within the unit, to the engine coolant temperature sensor; it passes through the engine coolant temperature sensor, which is a type of resistor, and is grounded at the engine control module. Note that the resistance of the engine coolant temperature sensor decreases when the temperature of the engine coolant increases.
- The engine coolant temperature sensor terminal voltage becomes higher when the resistance of the engine coolant temperature sensor increases, and becomes lower when the resistance decreases. Consequently, the engine coolant temperature sensor terminal voltage varies in accordance with the temperature of the engine coolant, becoming lower when the temperature of the engine coolant increases.

## TROUBLESHOOTING HINTS

If, during engine warm-up, the fast-idling speed is not correct, or black smoke is emitted, the problem is usually a malfunction of the coolant temperature sensor.

## INSPECTION

### Using Scan Tool

| Function | Item No. | Data display | Check conditions | Engine coolant temperature °C (°F) | Standard value °C |
|---|---|---|---|---|---|
| Data reading | 21 | Sensor detection temperature | Ignition switch: ON or engine running | When –20 (–4) | –20 |
| | | | | When 0 (32) | 0 |
| | | | | When 20 (68) | 20 |
| | | | | When 40 (104) | 40 |
| | | | | When 80 (176) | 80 |

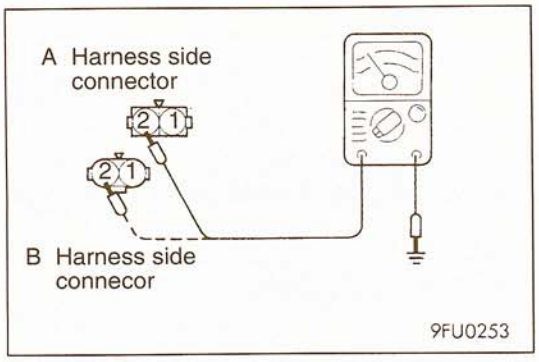


### HARNESS INSPECTION

**STEP 1. Check for continuity in the ground circuit.**

- Engine coolant temperature sensor connector: Disconnected

**OK: GO TO STEP 2**

**NG: Repair the harness. (A2 – 92, B2 – 92)**

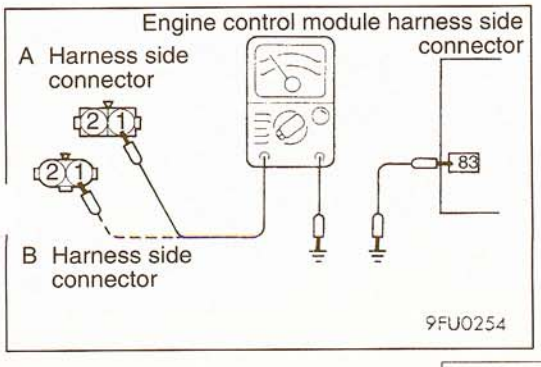


**STEP 2. Check for an open or short-circuit between the engine coolant temperature sensor and the engine control module.**

- Engine coolant temperature sensor connector: Disconnected
- Engine control module connector: Disconnected

**OK: GO TO STEP 3**

**NG: Repair the harness. (A1 – 83, B1 – 83)**

**TSB Revision**

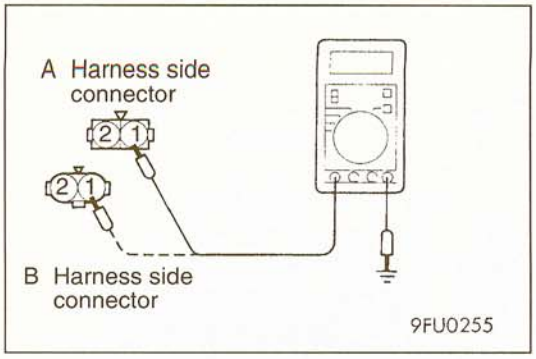


**STEP 3. Measure the power supply voltage.**

- Engine coolant temperature sensor connector: Disconnected
- Engine control module connector: Connected
- Ignition switch: ON

**Voltage (V): 4.5 – 4.9 V**

**OK: STOP**

**NG: Replace the engine control module.**

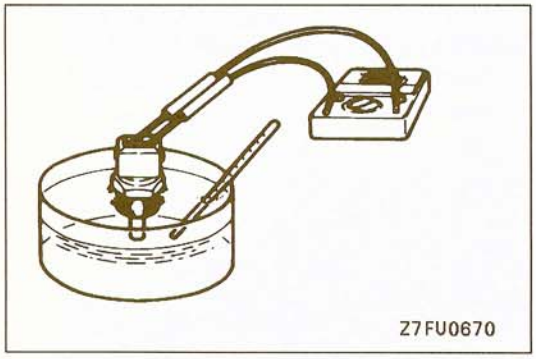


**SENSOR INSPECTION**

(1) Remove the engine coolant temperature sensor from the intake manifold.
(2) With temperature sensing portion of coolant temperature sensor immersed in hot water check resistance.

**Standard value:**

| Temperature °C (°F) | Resistance kΩ |
|---|---|
| 0 (32) | 5.8 |
| 20 (68) | 2.4 |
| 40 (104) | 1.1 |
| 80 (176) | 0.3 |

(3) If the resistance is outside the standard value greatly, replace the sensor.

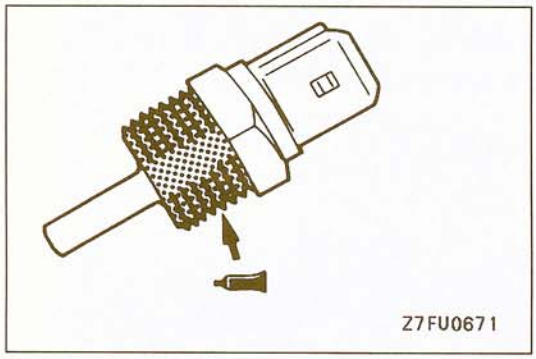


(4) Apply specified sealant to the threaded portion.

**Specified sealant:**
**3M Nut Locking Part No. 4171 or equivalent**

(5) Install the engine coolant temperature sensor and tighten it to the specified torque.

**Sensor tightening torque: 30 Nm (22 ft.lbs)**

## THROTTLE POSITION SENSOR

13110220034

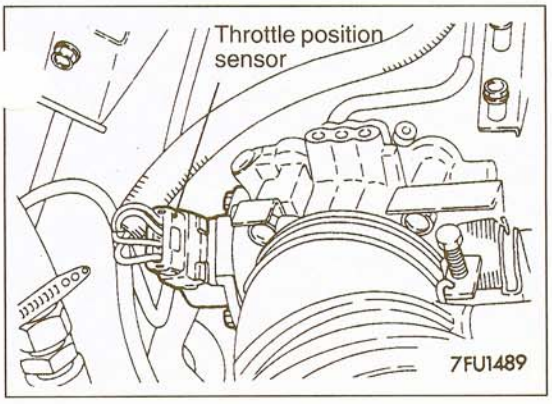


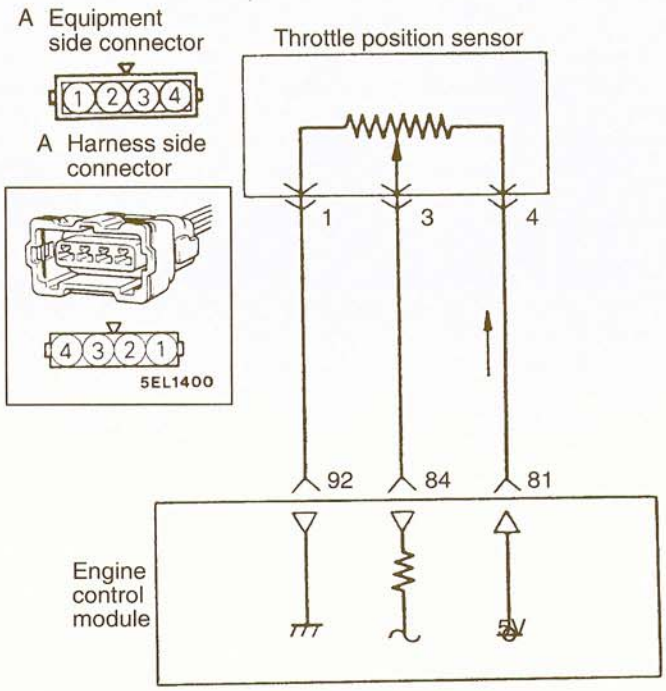


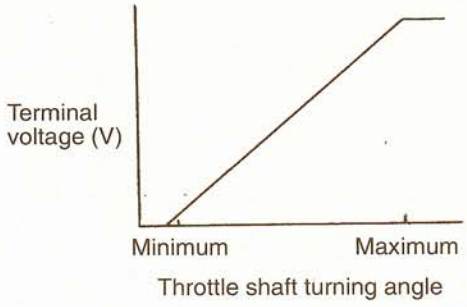


7FU0672

Engine control module connector

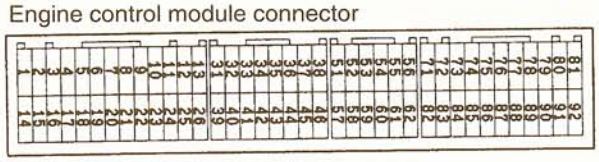

9FU0393

7FU1881

### OPERATION

- The throttle position sensor functions to convert the degree of opening of the throttle valve to voltage, and to input that voltage (as signals) to the engine control module. The engine control module, based upon those signals, then regulates the amount of fuel injection, etc.
- The 5 V power supply within the engine control module is supplied to the throttle position sensor, after which it passes through the resistance within the sensor and is grounded as the engine control module.
- When the throttle valve shaft is rotated all the way from the idling position to the fully open position, the resistance between the throttle position sensor's variable-resistance terminal and the ground terminal also increases in accordance with that rotation, and, as a result, the voltage of the throttle position sensor's variable-resistance terminal also becomes higher in accordance with that rotation.

### TROUBLESHOOTING HINTS

Hint 1:
The signals of the throttle position sensor are more important fore control of the automatic transmission than for control of the engine; shifting "impact shocks" are produced if there is a malfunction of the throttle position sensor.

Hint 2:
If the voltage of the throttle position sensor is outside the standard value, check once again after making the throttle position sensor adjustment. In addition, if there are any indication that the fixed SAS has been moved, adjust the fixed SAS.

**TSB Revision**

## INSPECTION

### Using Scan Tool

| Function | Item No. | Data display | Check conditions | Throttle valve | Standard value mV |
|---|---|---|---|---|---|
| Data reading | 14 | Sensor detection voltage | Ignition switch: ON for 15 seconds or more | Set to the idling position. | 300–1,000 |
| | | | | Open gradually. | Becomes higher proportionally to valve opening |
| | | | | Open fully. | 4,500–5,500 |

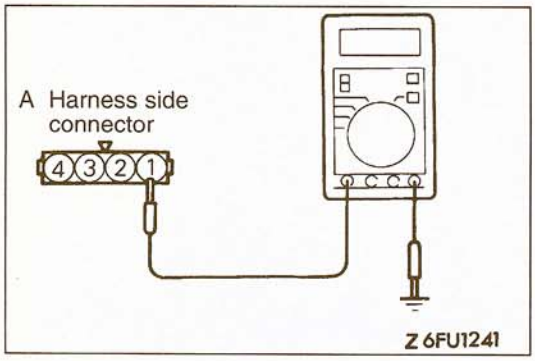


### HARNESS INSPECTION

**STEP 1. Check for continuity in the ground circuit.**

- Throttle position sensor connector: Disconnected

**OK: GO TO STEP 2**

**NG: Repair the harnesses. (A1 – 92)**

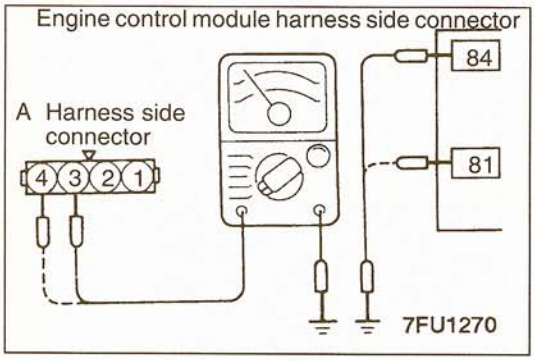


**STEP 2. Check for an open or short-circuit between the throttle position sensor and the engine control module.**

- Throttle position sensor connector: Disconnected
- Engine control module connector: Disconnected
- All control module connectors, such as the EC connector, which use throttle position sensor output. Disconnected

**OK: GO TO STEP 3**

**NG: Repair the harnesses. (A3 – 84, A4 – 81)**

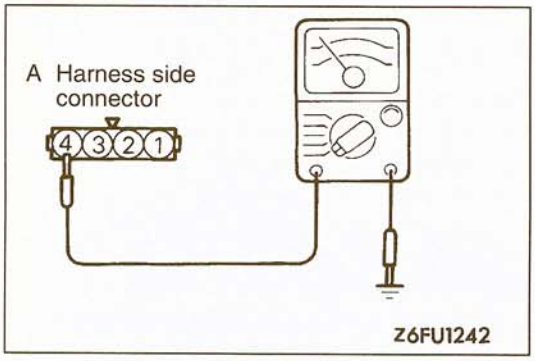


**STEP 3. Measure the applied voltage.**

- Throttle position sensor connector: Disconnected
- Engine control module connector: Connected
- Ignition switch: ON

**Voltage (V): 4.8 – 5.2**

**OK: STOP**

**NG: Replace the engine control module.**

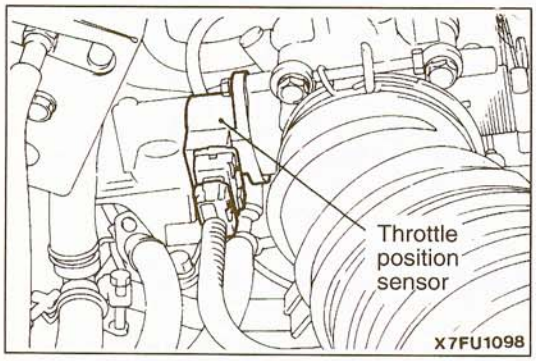


### SENSOR INSPECTION

(1) Disconnect the throttle position sensor connector.

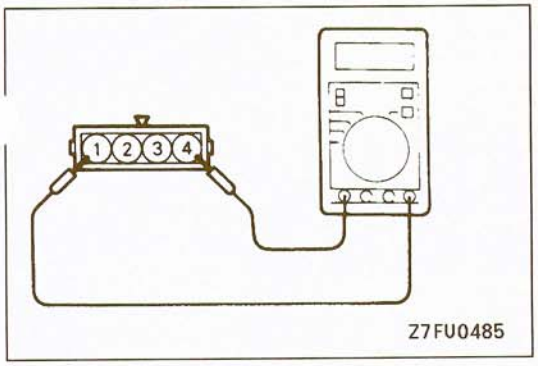


(2) Measure the resistance between terminal (1) (sensor ground) and terminal (4) (sensor power).

**Standard value: 3.5–6.5 kΩ**

(3) Connect a pointer type ohmmeter between terminal (1) (sensor ground) and terminal (3) (sensor output).

(4) Open the throttle valve slowly from the idle position to the full open position and check that the resistance changes smoothly in proportion with the throttle valve opening angle.

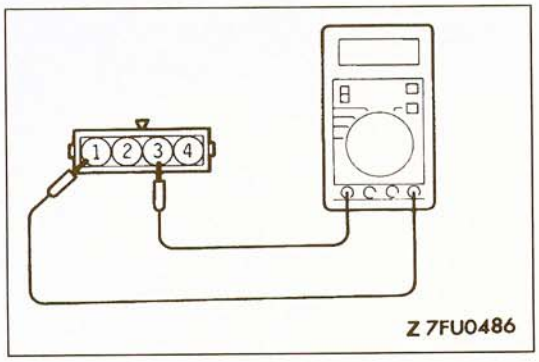


(5) If the resistance is outside the standard value, or fails to change smoothly, replace the throttle position sensor.

**TPS installation torque: 2.0 Nm (1.5 ft.lbs.)**

For the closed throttle position switch and throttle position sensor adjustment procedure, refer to P.13A-48.

## CLOSED THROTTLE POSITION SWITCH

13110230037

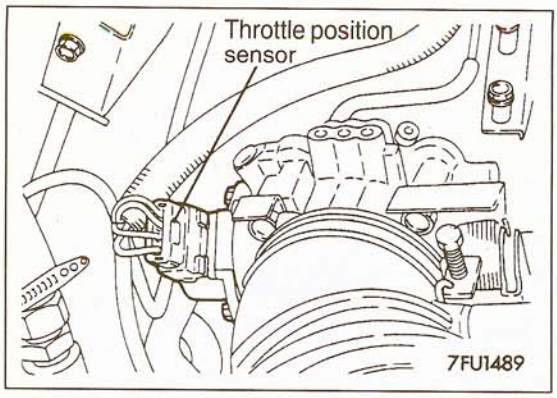


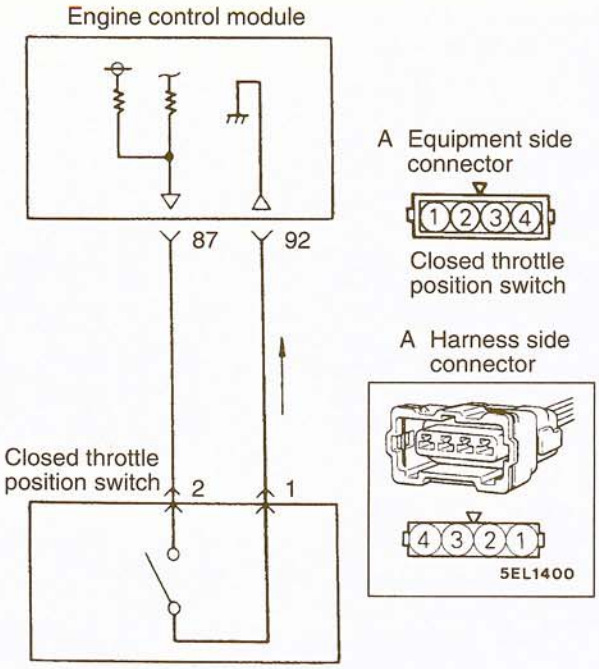


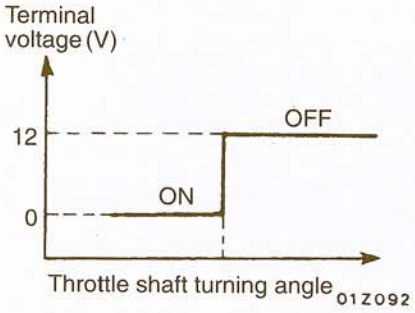


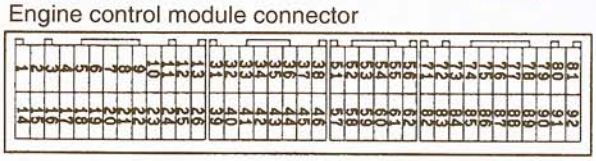


7FU1882

### OPERATION

- The closed throttle position switch functions to convert (to HIGH/LOW-level voltage) data as to whether the accelerator is depressed or released, and to input that voltage (as signals) to the engine control module. The engine control module, based upon those signals, regulates the idle air control motor.
- Voltage within the engine control module is applied, by way of the resistance, to the closed throttle position switch. When the foot is taken off the accelerator, the closed throttle position switch is switched ON, so the current is grounded. As result, the closed throttle position switch terminal voltage changes from HIGH to LOW level.

### TROUBLESHOOTING HINTS

If there is an abnormal condition of the closed throttle position switch output even though the results of the checking of the closed throttle position switch harness and of the component itself indicate a normal condition, the cause is probably one of the following.

(1) Incorrect adjustment of the accelerator cable or the cruise-control cable.
(2) Incorrect adjustment of the fixed SAS.

TSB Revision

## INSPECTION

### Using Scan Tool

| ınction | Item No. | Data display | Check conditions | Throttle valve | Normal display |
|---|---|---|---|---|---|
| Data reading | 26 | Switch status | Ignition switch: ON (Operate the accelerator several times and check.) | Set to the idling position. | ON |
| | | | | Open slightly. | OFF* |

NOTE

*: The closed throttle position switch normally turns off when the voltage of the throttle position sensor is 50 – 100 mV higher than the voltage at the idle position. If the closed throttle position switch turns buck on after the throttle position sensor voltage has risen by 100 mV and the throttle valve has opened, the closed throttle position switch and the throttle position sensor need to be adjusted.

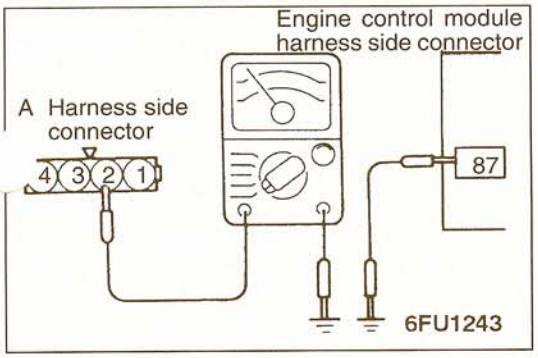


### HARNESS INSPECTION

**STEP 1. Check for an open or short-circuit between the closed throttle position switch and the engine control module.**

- Engine control module connector: Disconnected
- Throttle position sensor connector: Disconnected

**OK: GO TO STEP 2**

**NG: Repair the harness. (A2 – 87)**

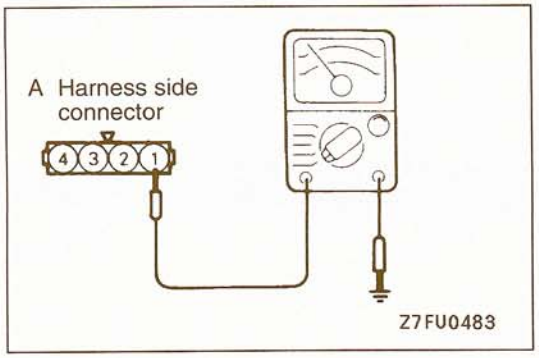


**STEP 2. Check for continuity in the ground circuit.**

- Throttle position sensor connector: Disconnected

**OK: GO TO STEP 3**

**NG: Repair the harness. (A1 – 92)**

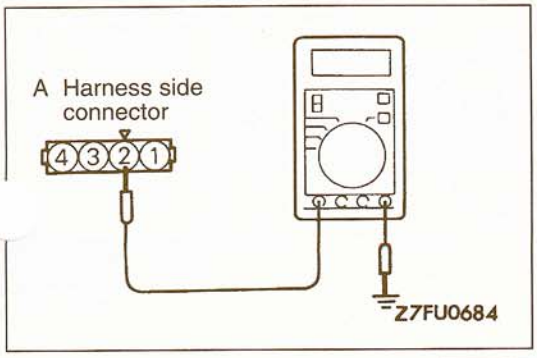


**STEP 3. Measure the power supply voltage of the closed throttle position switch.**

- Throttle position sensor connector: Disconnected
- Engine control module connector: Connected
- Ignition switch: ON

**Voltage (V): 4 or higher**

**OK: STOP**

**NG: Replace the engine control module.**

**TSB Revision**

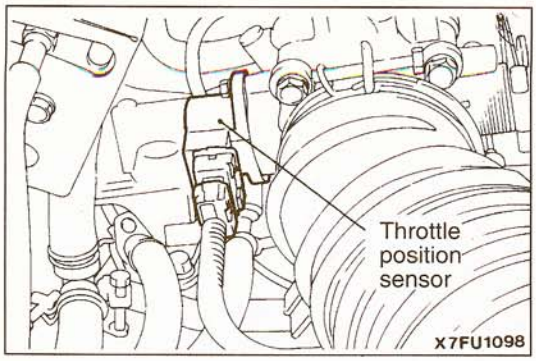


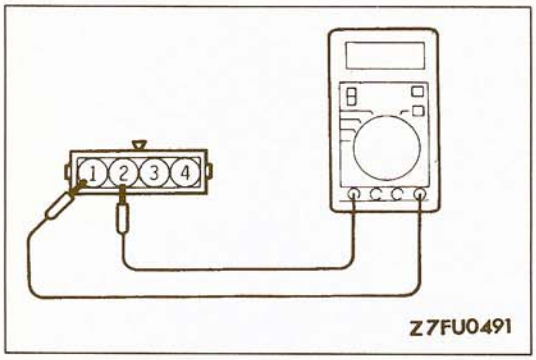


**SENSOR INSPECTION**

(1) With the accelerator pedal released, check that the throttle valve lever or the fixed SAS is pushed.

NOTE
If it is not pushed, adjust the fixed SAS. (Refer to P.13A-50.)

(2) Disconnect the throttle position sensor connector.

(3) Check for continuity between throttle position sensor connector terminal (1) (sensor ground) and terminal (2) (closed throttle position switch).

| Accelerator pedal | Continuity |
|---|---|
| Depressed | No continuity |
| Released | Continuity (0 Ω) |

NOTE
If there is no continuity when the accelerator pedal is released, loosen the throttle position sensor installation screw; then, after turning all the way in the clockwise direction, check again.

(4) Replace the throttle position sensor (with built-in closed throttle position switch) if there is a malfunction.

NOTE
For the closed throttle position switch and throttle positio.. sensor adjustment procedure, refer to P.13A-48.

## CAMSHAFT POSITION SENSOR <SOHC-12 valve engine>

13110240030

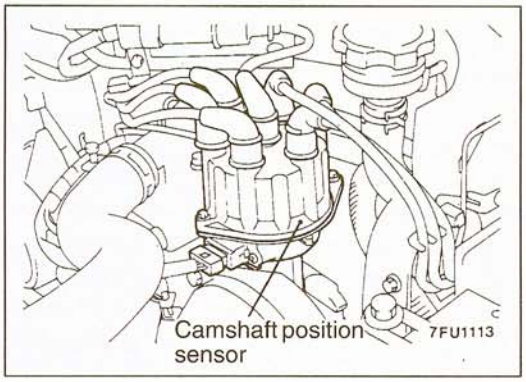


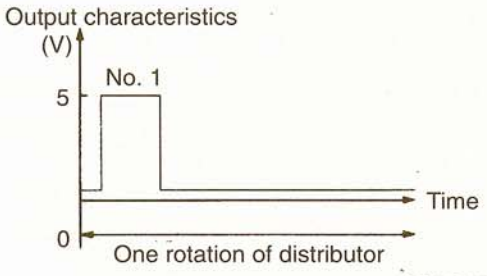


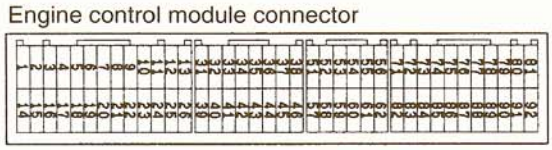


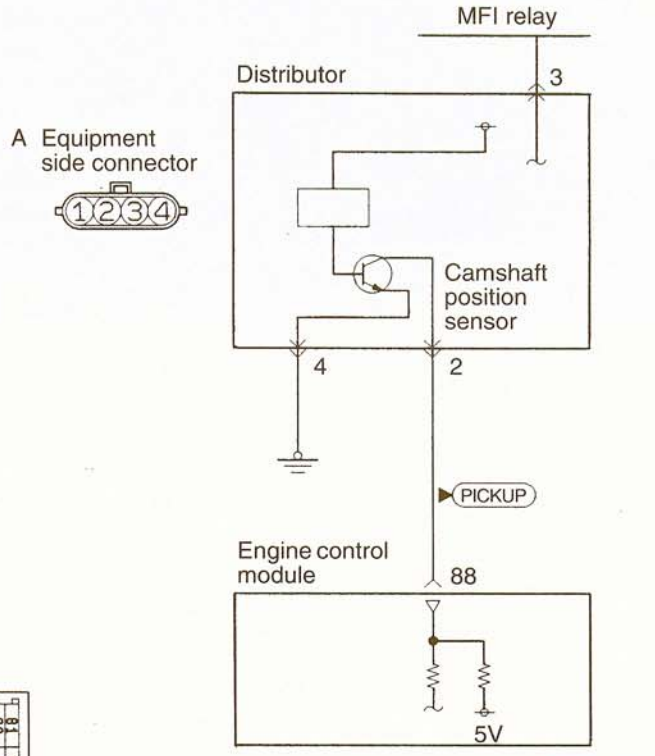


7FU1883

### OPERATION

- The camshaft position sensor functions to detect the top dead center position of the No. 1 cylinder and to convert those data to pulse signals that are input to the engine control module. The engine control module, based upon those signals, calculates the sequence of fuel injection.
- The power for the camshaft position sensor is supplied from the MFI relay and is grounded to the vehicle body. The camshaft position sensor, by intermitting the flow (to ground) of the 5 V voltage applied from the engine control module, produces pulse signals.

### TROUBLESHOOTING HINTS

Hint 1:
If the camshaft position sensor does not function correctly, correct sequential injection is not being carried out, so that the engine may stall, run irregularly at idle or fail to accelerate normally.

Hint 2:
If the sensor outputs a pulse signal when the ignition switch is turned ON (without starting the engine), the cause is probably a malfunction of the camshaft position sensor or engine control module.

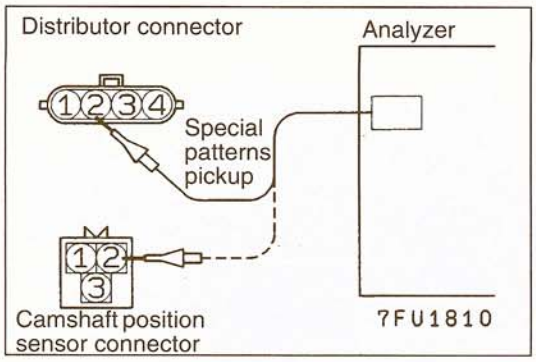


## INSPECTION

### Wave Pattern Inspection Using an Analyzer

#### Measurement method

(1) Disconnect the distributor connector and connect the special tool (test harness: MB991348) in between. (All terminals should be connected.)
(2) Connect the analyzer special patterns pickup to terminal (2) of the distributor connector. (When inspecting the camshaft position sensor signal wave pattern.)
(3) Disconnect the crankshaft position sensor connector and connect the special tool (test harness: MD998478) in between.
(4) Connect the analyzer special patterns pickup to terminal (2) of the crankshaft position sensor connector.

#### Alternative method (when test harness is not available)

(1) Connect the analyzer special patterns pickup to ECM terminal (88) for the camshaft position sensor.
(2) Connect the analyzer special patterns pickup to ECM terminal (89) for the crankshaft position sensor.

#### Standard wave pattern

Observation conditions

| | |
|---|---|
| Function | Special patterns |
| Pattern height | Low |
| Pattern selector | Display |
| Engine r/min | Idling |

Standard wave pattern

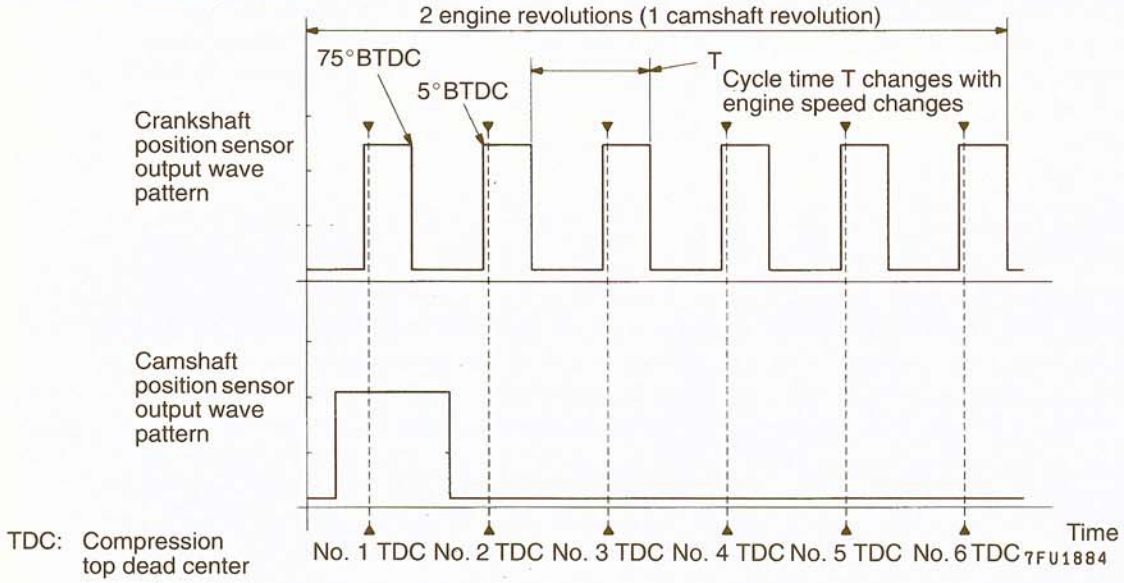


TDC: Compression top dead center

TSB Revision

**Wave pattern observation points**

Check that cycle time T becomes shorter and the frequency increases when the engine speed is increased.

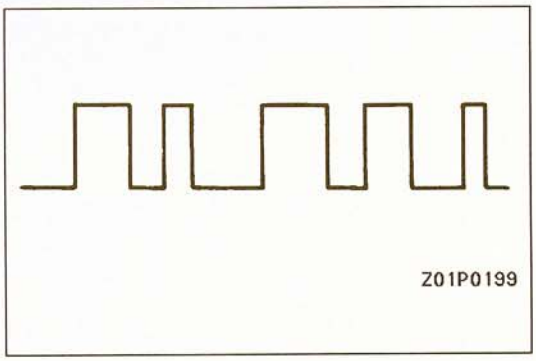


**Examples of abnormal wave patterns**

- Example 1

  **Cause of problem**
  Malfunction of sensor interface

  **Wave pattern characteristics**
  Short wave pattern is output even when the engine is not started.

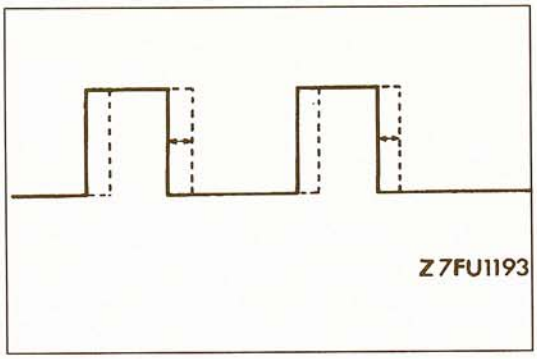


- Example 2

  **Cause of problem**
  Loose timing belt
  Abnormality in sensor disk

  **Wave pattern characteristics**
  Wave pattern is displaced to the left or right.

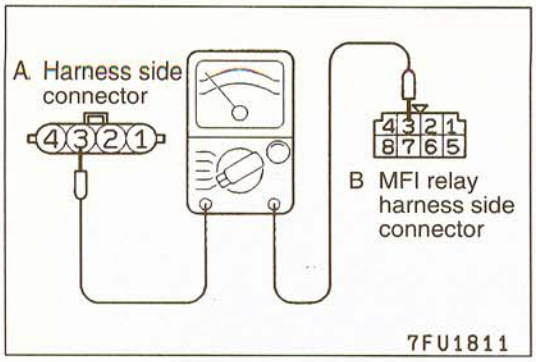


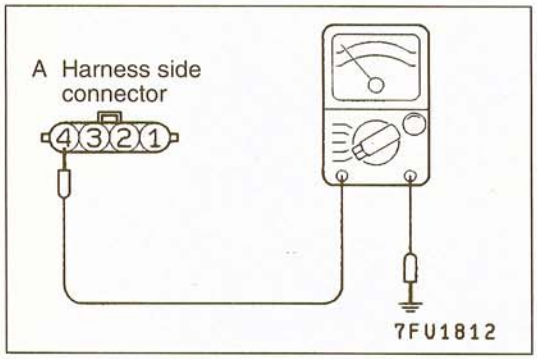


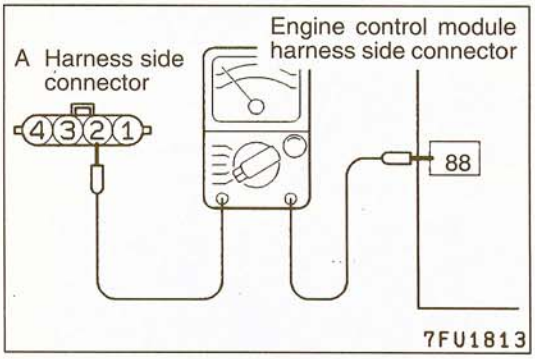


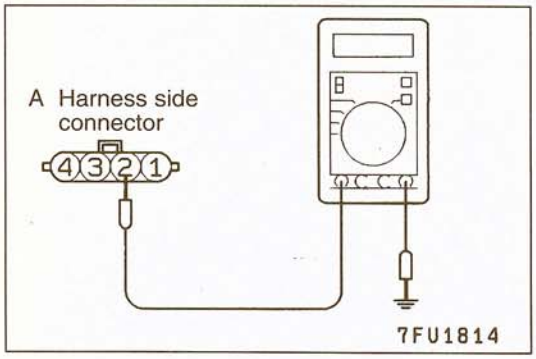


## HARNESS INSPECTION

**STEP 1. Check for continuity between the camshaft position sensor and the MFI relay.**

- MFI relay connector: Disconnected
- Distributor connector: Disconnected

NOTE
- Touch the ohmmeter probes to both ends of the harness.

**OK: GO TO STEP 2**

**NG: Repair the harness. (A3 – B3)**

**STEP 2. Check for continuity in the ground circuit.**

- Distributor connector: Disconnected

**OK: GO TO STEP 3**

**NG: Repair the harness. (A4 – Ground)**

**STEP 3. Check for an open or short-circuit between the camshaft position sensor and the engine control module.**

- Engine control module connector: Disconnected
- Distributor connector: Disconnected

**OK: GO TO STEP 4**

**NG: Repair the harnesses. (A2 – 88)**

**STEP 4. Check the output circuit voltage.**

- Distributor connector: Disconnected
- Engine control module connector: Connected
- Ignition switch: ON

**Voltage (V): 4.8 – 5.2**

**OK: STOP**

**NG: Replace the engine control module.**

## CAMSHAFT POSITION SENSOR <SOHC-24 valve engine, DOHC>

13110240047

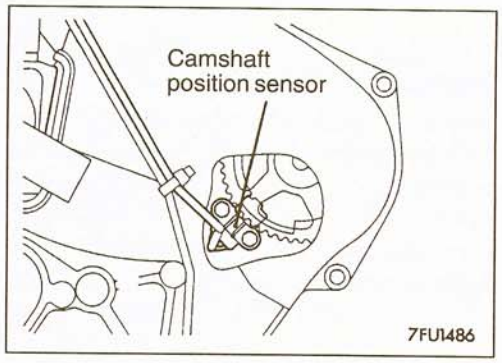


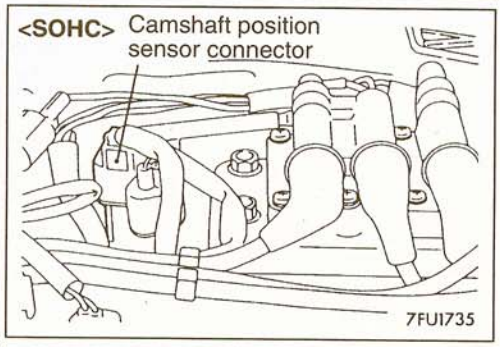


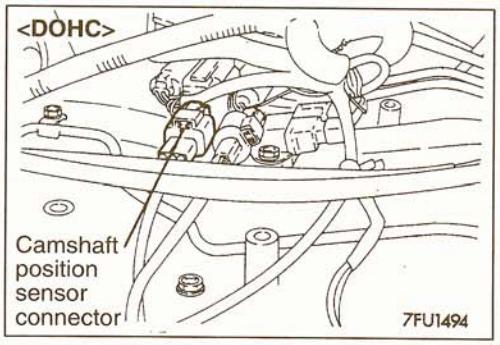


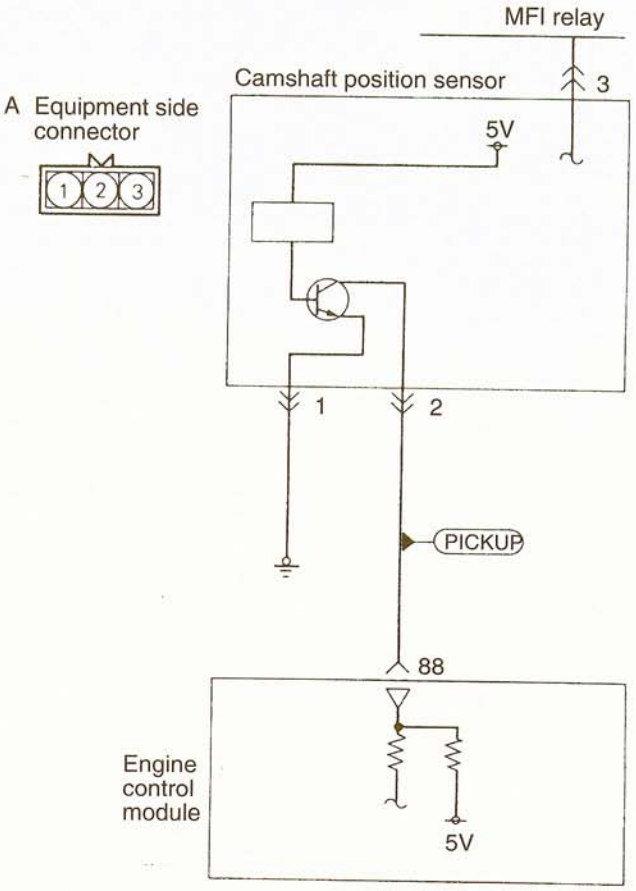


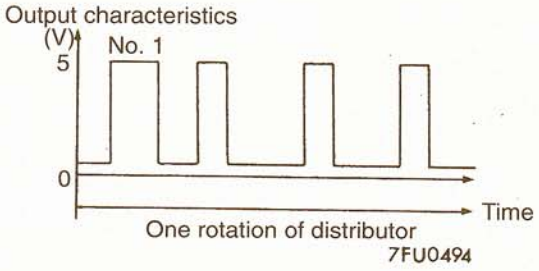


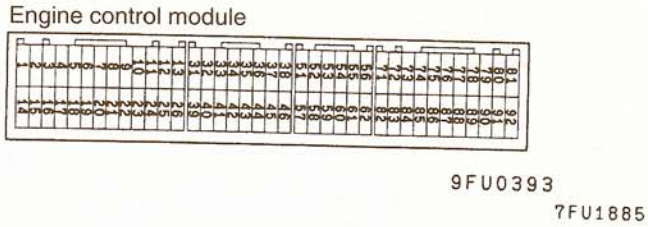


### OPERATION

- The camshaft position sensor senses the top dead center on compression stroke, converts it into a pulse signal and inputs it to the engine control module, which then computes the fuel injection sequence, etc. based on the input signal.
- Power to the camshaft position sensor is supplied from the multiport fuel injection relay and is grounded to the body. The camshaft position sensor generates a pulse signal as it repeatedly connects to and disconnects from the 5 V voltage supplied from the engine control module and ground.

### TROUBLESHOOTING HINTS

Hint 1:
If the camshaft position sensor does not function correctly, correct sequential injection is not being carried out, so that the engine may stall, run irregularly at idle or fail to accelerate normally.

Hint 2:
If the sensor outputs a pulse signal when the ignition switch is turned ON (without starting the engine), the cause is probably a malfunction of the camshaft position sensor or engine control module.

**TSB Revision**

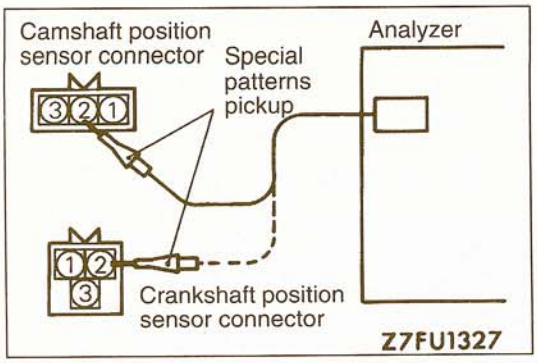


## INSPECTION

### Wave Pattern Inspection using an Analyzer

#### Measurement method

(1) Disconnect the connector of the camshaft position sensor, and connect the special tool (test harness: MB991348) across the disconnected connector parts. (Connect the tool to all terminals.)
(2) Connect the special patterns pickup of the analyzer to the terminal (2) of the camshaft position sensor connector.
(3) Disconnect the connector of the crankshaft position sensor, and connect the special tool (test harness: MD998478) across the disconnected connector parts.
(4) Connect the special patterns pickup of the analyzer to the terminal (2) of the crankshaft position sensor connector.

#### Alternative method (when test harness is not available)

(1) Connect the analyzer special patterns pickup to ECM terminal (88) for the camshaft position sensor.
(2) Connect the analyzer special patterns pickup to ECM terminal (89) for the crankshaft position sensor.

#### Standard wave pattern

Observation conditions

| | |
|---|---|
| Function | Special patterns |
| Pattern height | Low |
| Pattern selector | Display |
| Engine r/min | Idling |

Standard wave pattern

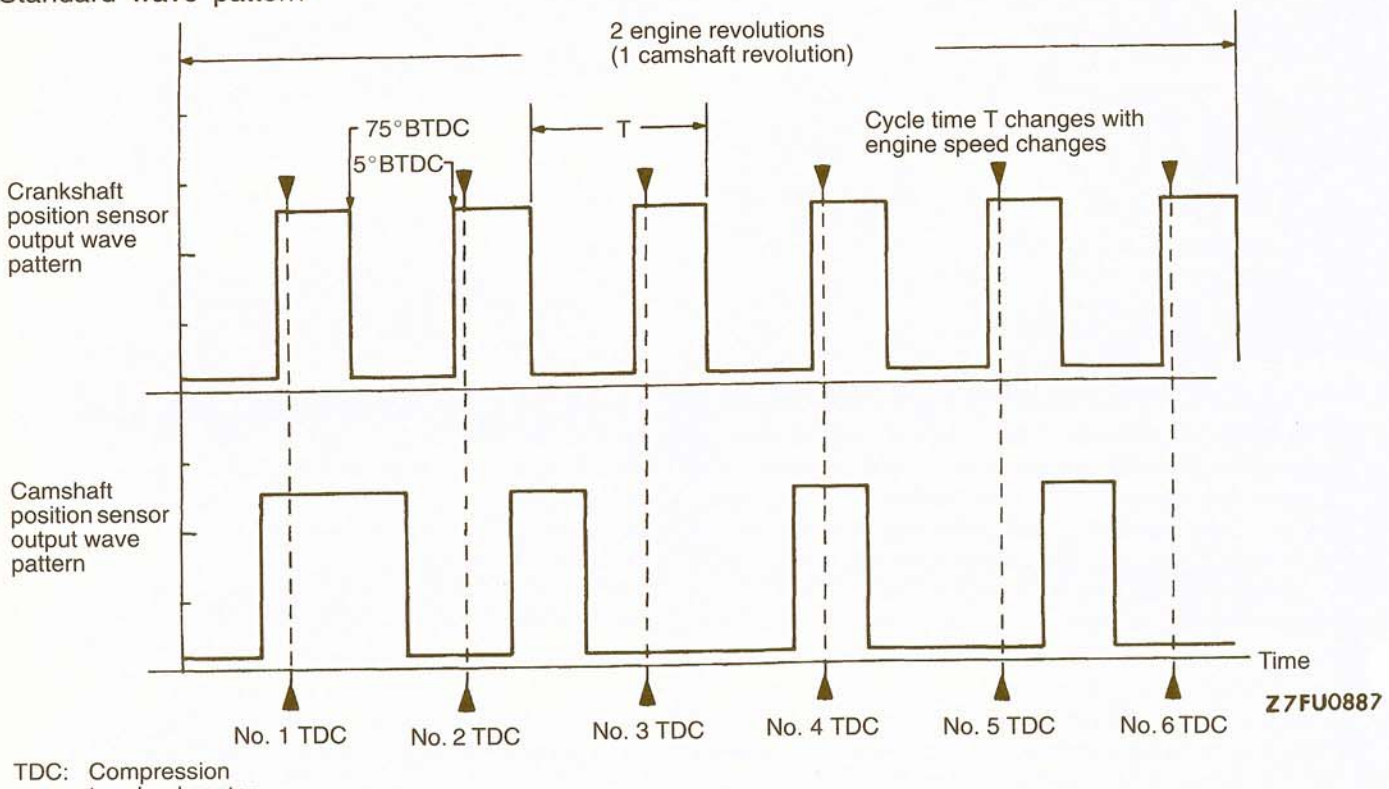


TDC: Compression top dead center

TSB Revision

**Wave pattern observation points**

Refer to P.13A-91.

**Examples of abnormal wave patterns**

Refer to P.13A-91.

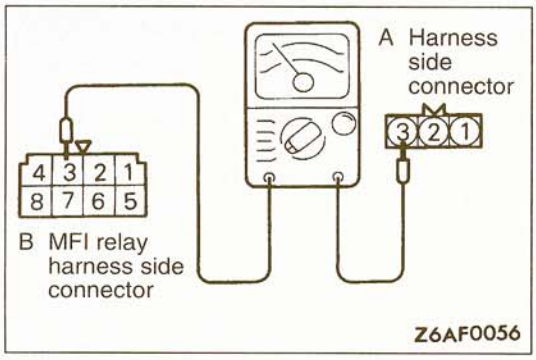


## HARNESS INSPECTION

**STEP 1. Check for continuity between the camshaft position sensor and the MFI relay.**

- MFI relay connector: Disconnected
- Camshaft position sensor connector: Disconnected

NOTE
- Insert the probes of the circuit tester into both ends of the harness.

**OK: GO TO STEP 2**

**NG: Repair the harness. (A3 – B3)**

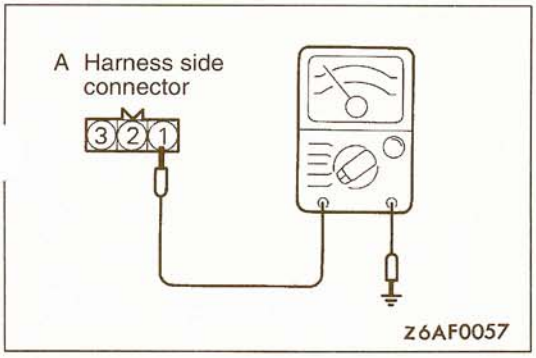


**STEP 2. Check for continuity in the ground circuit.**

- Camshaft position sensor connector: Disconnected

**OK: GO TO STEP 3**

**NG: Repair the harness. (A1 – Ground)**

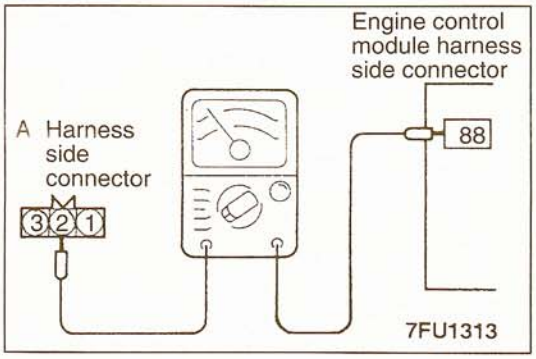


**STEP 3. Check for an open circuit or a short-circuit to ground between the camshaft position sensor and engine control module.**

- Engine control module connector: Disconnected
- Camshaft position sensor connector: Disconnected

**OK: GO TO STEP 4**

**NG: Repair the harness. (A2 – 88)**

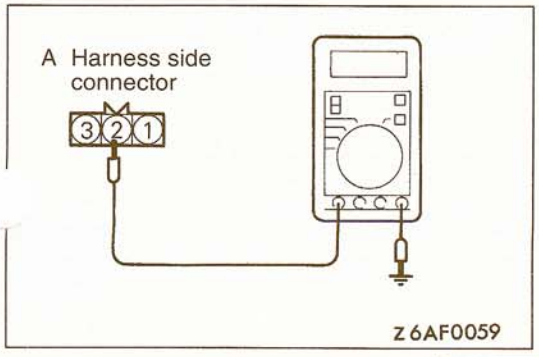


**STEP 4. Measure the applied voltage.**

- Camshaft position sensor connector: Disconnected
- Engine control module connector: Connected
- Ignition switch: ON

**Voltage (V): 4.8 – 5.2**

**OK: STOP**

**NG: Replace the engine control module.**

## CRANKSHAFT POSITION SENSOR

13110250033

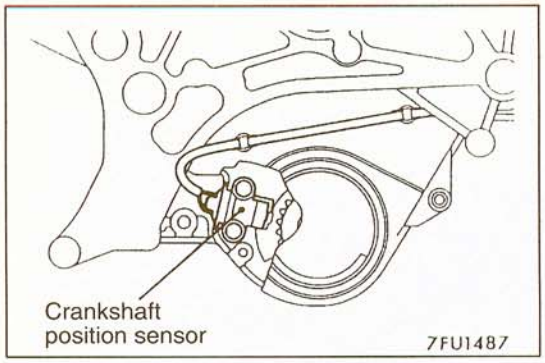


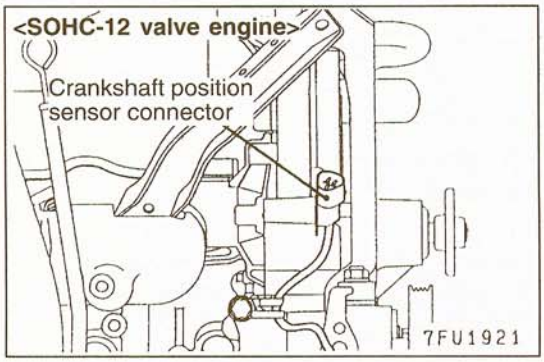


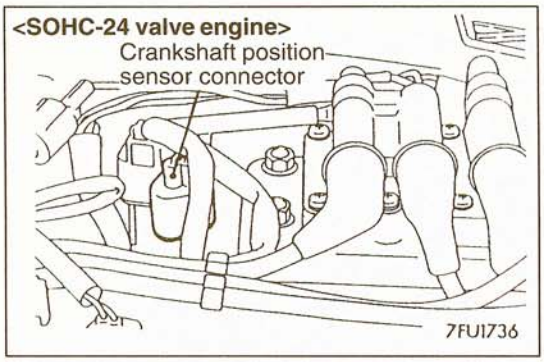


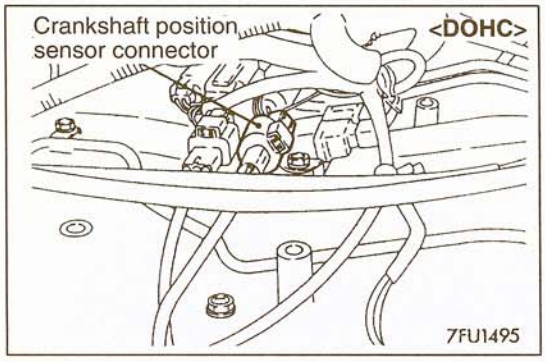


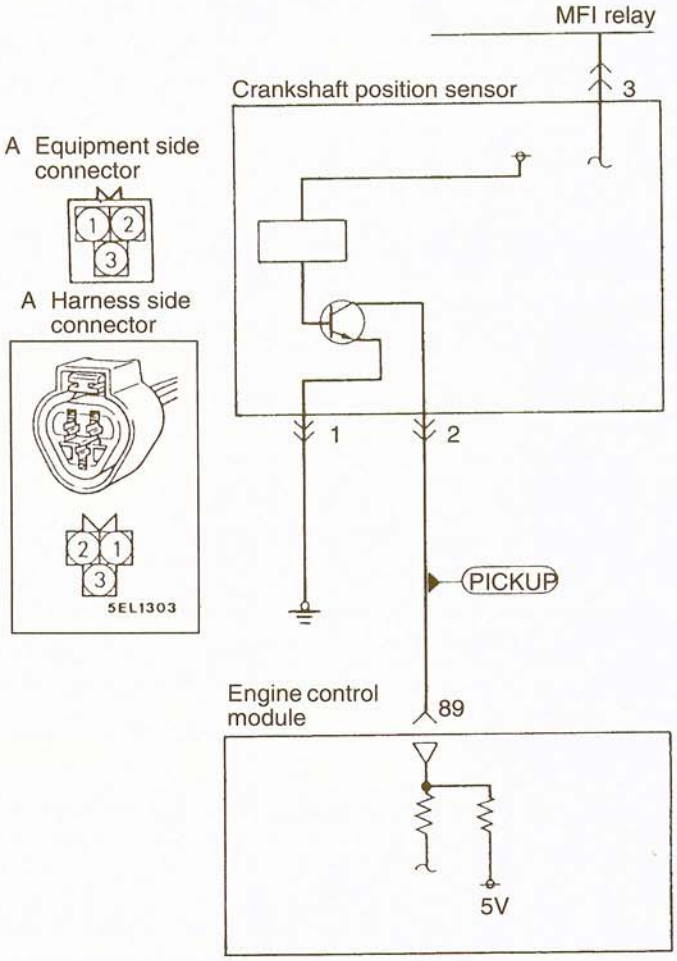


6AF0060

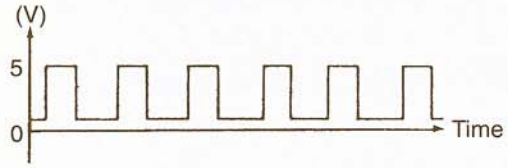


7FU0682

Engine control module connector

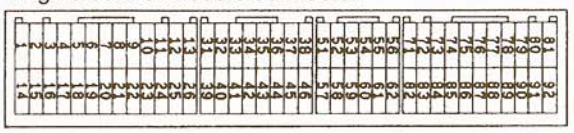

9FU0393

7FU1886

**TSB Revision**

## OPERATION

- The crankshaft position sensor functions to detect the crank angle (position) of each cylinder, and to convert those data to pulse signals, which are then input to the engine control module. The engine control module, based upon those signals, calculates the engine rpm, and also regulates the fuel injection timing and the ignition timing.
- The power for the crankshaft position sensor is supplied from the MFI relay and is grounded to the vehicle body. The crankshaft position sensor, by intermitting the flow (to ground) of the 5 V voltage applied from the engine control module, produces pulse signals.

## TROUBLESHOOTING HINTS

Hint 1:
If an impact is suddenly felt during driving or the engine suddenly stalls during idling, try shaking the crankshaft position sensor during idling. If the engine stalls, the cause is probably improper or incomplete contact of the crankshaft position sensor's connector.

Hint 2:
If the crankshaft position sensor output r/min is 0 r/min during cranking when the engine cannot be started, the cause is probably a malfunction of the crankshaft position sensor or a broken timing belt.

Hint 3:
If the indicated value of the crankshaft position sensor output r/min is 0 r/min during cranking when the engine cannot be started, the cause is probably a failure of the ignition coil's primary current to intermittently pulse correctly, so a malfunction of the ignition system circuitry, the ignition coil and/or the power transistor is the probable cause.

Hint 4:
If idling is possible even though the crankshaft position sensor indicated r/min is outside the standard value, the cause is usually a malfunction of something other than the crankshaft position sensor.

Examples:
(1) Malfunction of engine coolant-temperature sensor
(2) Malfunction of idle air control motor
(3) Incorrect adjustment of the standard idling speed.

## INSPECTION

### Using Scan Tool

| Function | Item No. | Data display | Check conditions | Check description | Normal condition |
|---|---|---|---|---|---|
| Data reading | 22 | Cranking r/min | • Engine is being cranked.<br>• Tachometer connected. (The tachometer is used to check the intermittent pulsation of the ignition coil's primary current.) | Compare the cranking r/min and the r/min indicated by the scan tool. | Both agree. |

| Function | Item No. | Data display | Check conditions | Engine coolant temperature °C (°F) | Standard value r/min |
|---|---|---|---|---|---|
| Data reading | 22 | Idling r/min | • Engine: Idling<br>• Closed throttle position switch: ON | When –20 (–4) | 1,275 – 1,475 <Federal – SOHC-24 valve engine><br>1,300 – 1,500 <Except Federal – SOHC-24 valve engine> |
| | | | | When 0 (32) | 1,225 – 1,425 <Federal – SOHC-24 valve engine><br>1,300 – 1,500 <Except Federal – SOHC-24 valve engine> |
| | | | | When 20 (68) | 1,100 – 1,300 <Federal – SOHC-24 valve engine><br>1,300 – 1,500 <Except Federal – SOHC-24 valve engine> |
| | | | | When 40 (104) | 950 – 1,150 <Federal – SOHC-24 valve engine><br>1,050 – 1,250 <Except Federal – SOHC-24 valve engine> |
| | | | | When 80 (176) | 600–800 |

### Wave Pattern Inspection Using an Analyzer

<SOHC-12 valve engine>
Refer to P.13A-89
<SOHC-24 valve engine, DOHC>
Refer to P.13A-94

TSB Revision

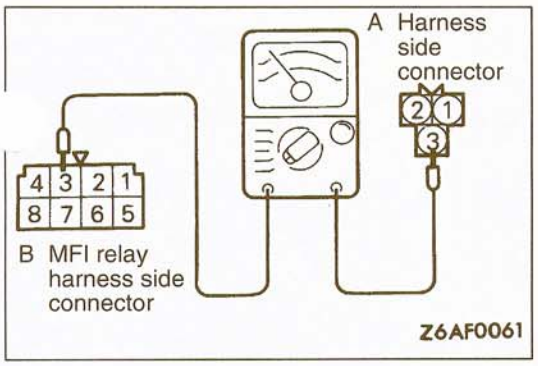


## HARNESS INSPECTION

**STEP 1. Check for continuity between the crankshaft position sensor and the MFI relay.**

- MFI relay connector: Disconnected
- Crankshaft position sensor connector: Disconnected

NOTE
- Touch the ohmmeter problems to both ends of the harness.

**OK: GO TO STEP 2**

**NG: Repair the harness. (A3 – B3)**

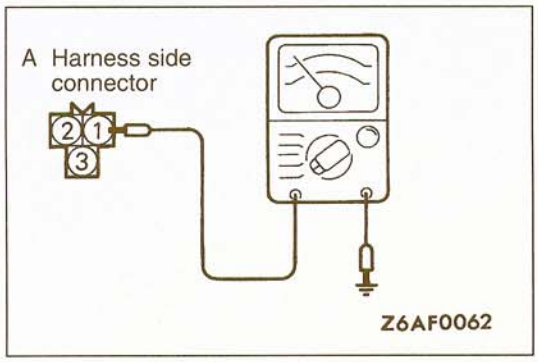


**STEP 2. Check for continuity in the ground circuit.**

- Crankshaft position sensor connector: Disconnected

**OK: GO TO STEP 3**

**NG: Repair the harness. (A1 – Ground)**

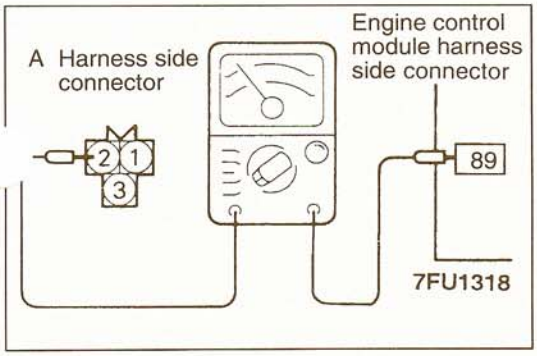


**STEP 3. Check for an open circuit or a short-circuit to ground between the crankshaft position sensor and the engine control module.**

- Engine control module connector: Disconnected
- Crankshaft position sensor connector: Disconnected

**OK: GO TO STEP 4**

**NG: Repair the harness. (A2 – 89)**

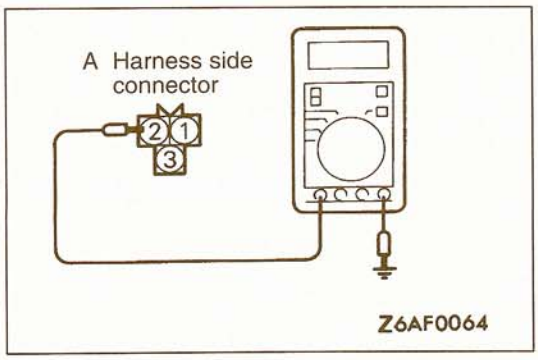


**STEP 4. Measure the applied voltage.**

- Crankshaft position sensor connector: Disconnected
- Engine control module connector: Connected
- Ignition switch: ON

**Voltage (V): 4.8 – 5.2**

**OK: STOP**

**NG: Replace the engine control module.**

## IGNITION SWITCH-ST <M/T>

13110260036

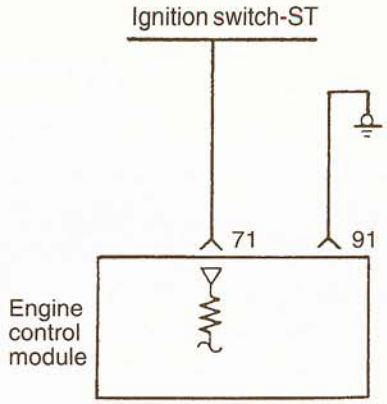


1FU0638

Engine control module connector

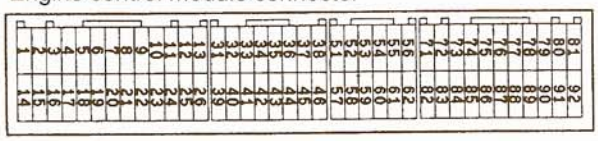

9FU0393

7FU1887

### OPERATION

- The ignition switch-ST inputs HIGH signals to the engine control module during engine cranking. The engine control module, based on those signals, regulates fuel injection during starting, etc.
- When the ignition switch is turned to the START position, the battery positive voltage during engine cranking is applied to the engine control module by way of the ignition switch, and the engine control module thus detects the fact that the engine is cranking.

### INSPECTION

#### Using Scan Tool

| Function | Item No. | Data display | Check conditions | Engine | Normal display |
|---|---|---|---|---|---|
| Data reading | 18 | Switch status | • Ignition switch: ON | Stopped | OFF |
| | | | | Cranking | ON |

TSB Revision

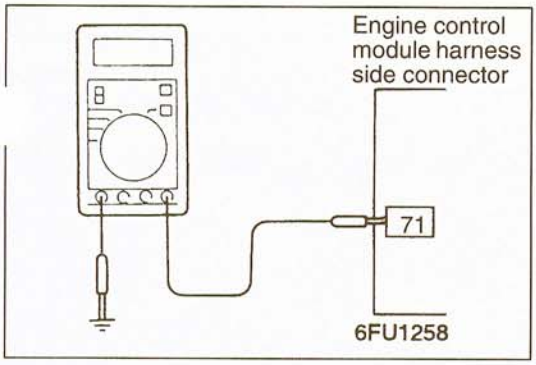


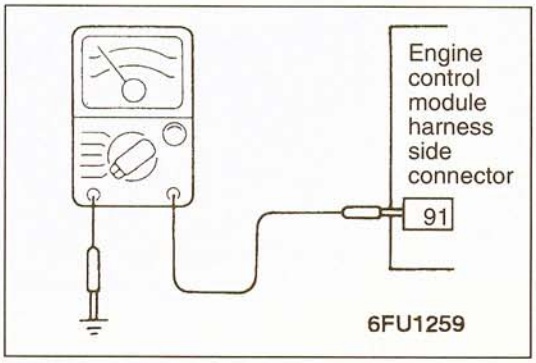


## HERNESS INSPECTION

**STEP 1. Measure the engine control module input voltage.**

- Engine control module connector: Disconnected
- Ignition switch: START

**Voltage (V): 8 or higher**

**OK: GO TO STEP 2**

**NG: Repair the harness. (71 – Ignition switch)**

**STEP 2. Check for continuity in the ground circuit.**

- Engine control module connector: Disconnected

**OK: STOP**

**NG: Repair the harness. (91 – Ground)**

## IGNITION SWITCH-ST AND PARK/NEUTRAL POSITION SWITCH <SOHC-12 valve engine>

13110270039

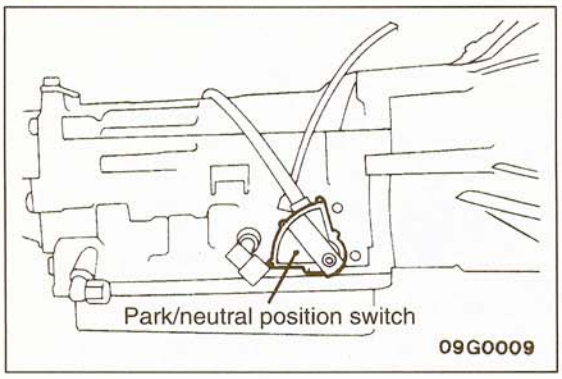


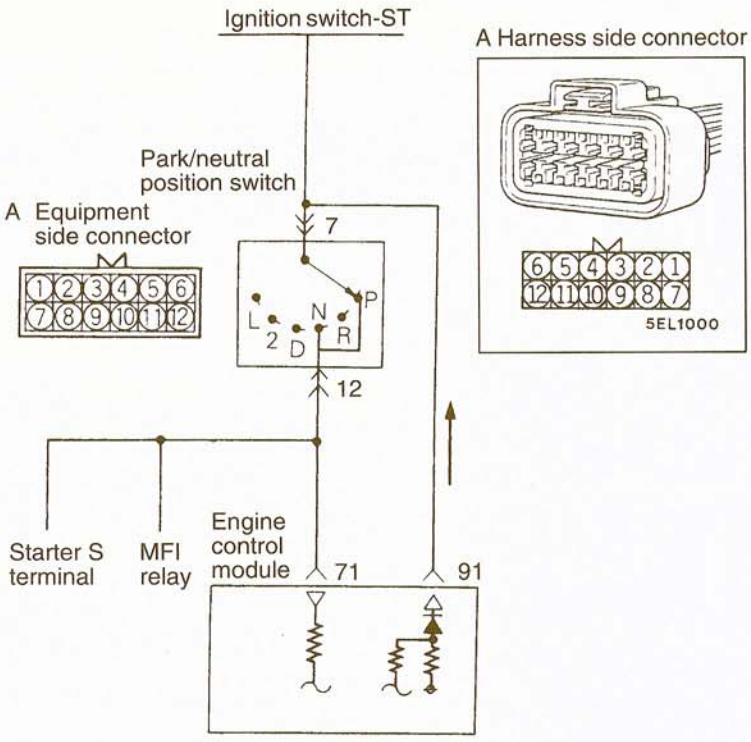


7FU1125

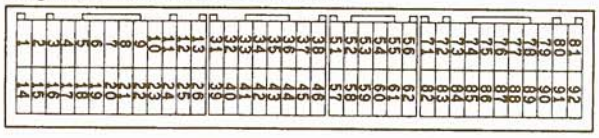


9FU0393

7FU1888

### OPERATION

- The ignition switch-ST inputs HIGH signals to the engine control module during engine cranking. The engine control module regulates fuel injection during starting, etc. based on those signals.
- When the ignition switch is set to START, the battery positive voltage during engine cranking is applied to the engine control module by way of the ignition switch and the park/neutral position switch, and the engine control module thus detects the fact that the engine is cranking. Note that battery positive voltage is not applied to the engine control module if the selector lever is in a position other than P or N.
- The park/neutral position switch functions to convert the voltage to HIGH level or LOW level depending upon whether the selector lever is in the P or N position or is at some position other than P or N, and inputs the result to the engine control module. The engine control module, based upon those signals, then regulates the operation of the idle air control motor.
- Battery positive voltage inside the engine control module is applied via the resistance to the park/neutral position switch. When the selector lever is placed in the P or N position, continuity is created, between the engine control module's park/neutral position switch terminal and the ground via the starter motor, and the terminal voltage becomes low.

### TROUBLESHOOTING HINTS

If the output of the park/neutral position switch is abnormal even though the results of the checking of the park/neutral position switch harness and o. the component itself are normal, the cause is probably improper adjustment of the control cable.

**TSB Revision**

## INSPECTION

### Using Scan Tool

nition switch-ST

| Function | Item No. | Data display | Check conditions | Engine | Normal display |
|---|---|---|---|---|---|
| Data reading | 18 | Switch status | • Ignition switch: ON | Stopped | OFF |
| | | | | Cranking | ON |

Park/neutral position switch

| Function | Item No. | Data display | Check conditions | Selector lever position | Normal display |
|---|---|---|---|---|---|
| Data reading | 29 | Shift position | • Ignition switch: ON | P or N | P or N |
| | | | | D, 2, L or R | D, 2, L or R |

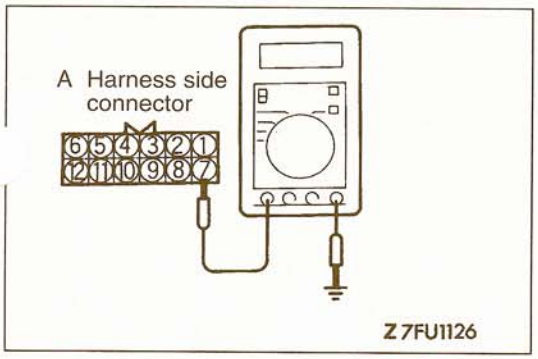


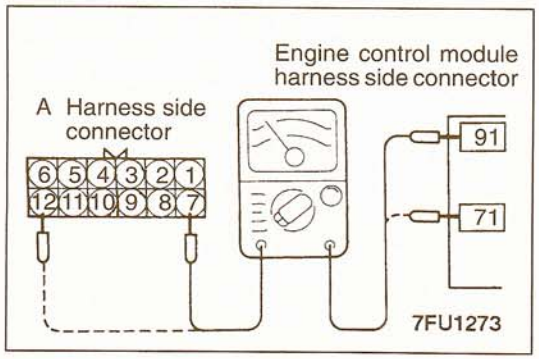


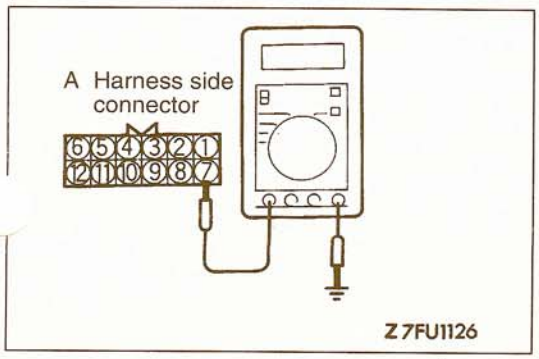


### HARNESS INSPECTION

**STEP 1. Measure the power supply voltage of the park/neutral position switch.**

- Engine control module connector: Disconnected
- Park/neutral position switch connector: Disconnected
- Ignition switch: START

**Voltage (V): Battery positive voltage**

**OK: GO TO STEP 2**

**NG: Check the power supply circuit.**

**STEP 2. Check for continuity between the park/neutral position switch and the engine control module.**

- Engine control module connector: Disconnected
- Park/neutral position switch connector: Disconnected

NOTE

- Touch the ohmmeter probes to both ends of the harness.

**OK: GO TO STEP 3**

**NG: Repair the harnesses. (A7 – 91, A12 – 71)**

**STEP 3. Measure the park/neutral position switch terminal input voltage.**

- Engine control module connector: Connected
- Park/neutral position switch connector: Disconnected
- Ignition switch: ON

**Voltage (V): Battery positive voltage**

**OK: STOP**

**NG: Replace the engine control module.**

### SENSOR INSPECTION

Refer to GROUP 23A – On-vehicle Service.

**TSB Revision**

## IGNITION SWITCH-ST AND PARK/NEUTRAL POSITION SWITCH <SOHC-24 valve engine, DOHC>

13110270046

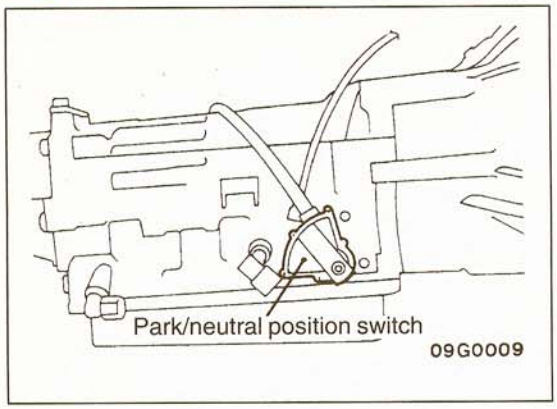


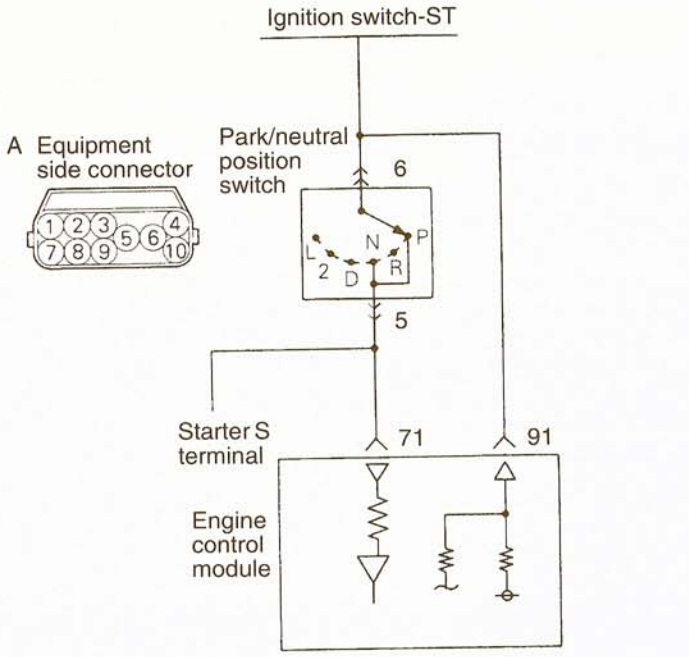


7FU1528

Engine control module connector

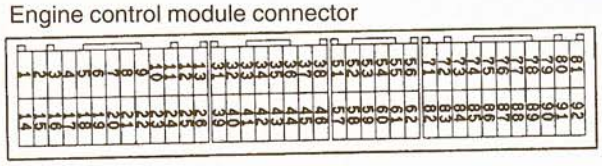

9FU0393

7FU1889

### OPERATION

Refer to P.13A-102.

### TROUBLESHOOTING HINTS

Refer to P.13A-102.

### INSPECTION

Refer to P.13A-102.

TSB Revision

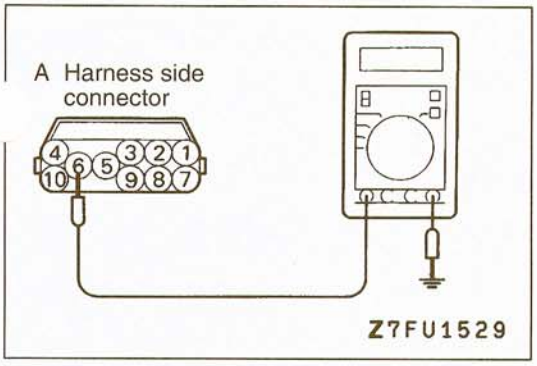


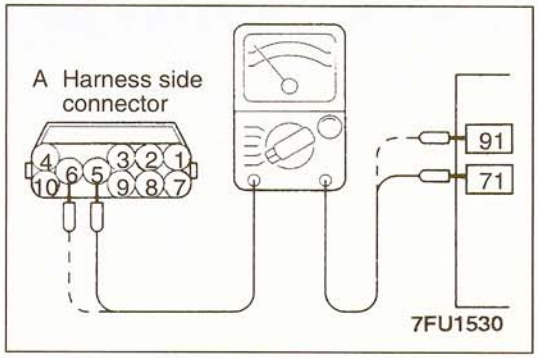


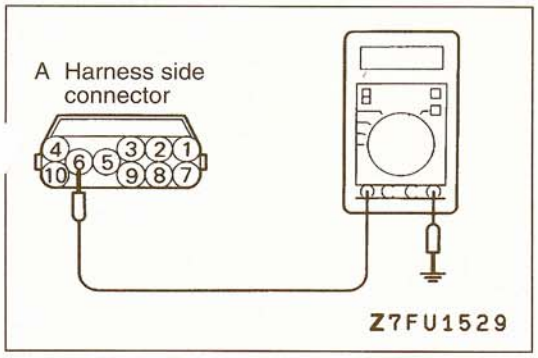


## HARNESS INSPECTION

**STEP 1. Measure the power supply voltage of the park/neutral position switch.**

- Engine control module connector: Disconnected
- Park/neutral position switch connector: Disconnected
- Ignition switch: START

**Voltage (V): Battery positive voltage**

**OK: GO TO STEP 2**

**NG: Check the power supply circuit.**

**STEP 2. Check for continuity between the park/neutral position switch and the engine control module.**

- Engine control module connector: Disconnected
- Park/neutral position switch connector: Disconnected

NOTE
- Touch the ohmmeter probes to both ends of the harness.

**OK: GO TO STEP 3**

**NG: Repair the harnesses. (A5 – 71, A6 – 91)**

**STEP 3. Measure the park/neutral position switch terminal input voltage.**

- Engine control module connector: Connected
- Park/neutral position switch connector: Disconnected
- Ignition switch: ON

**Voltage (V): Battery positive voltage**

**OK: STOP**

**NG: Replace the engine control module.**

## SENSOR INSPECTION

Refer to GROUP 23A – On-vehicle Service.

## VEHICLE SPEED SENSOR

13110280032

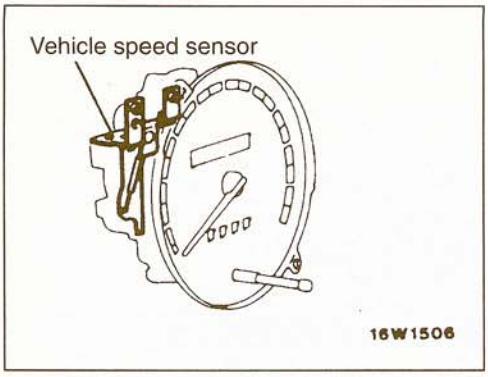


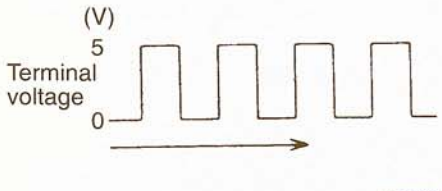


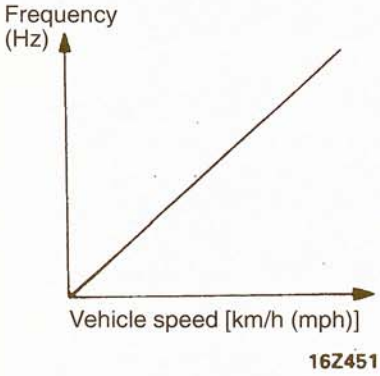


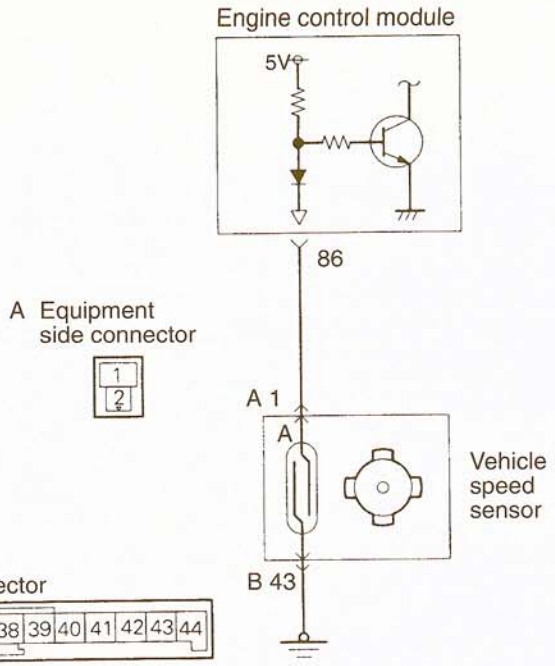


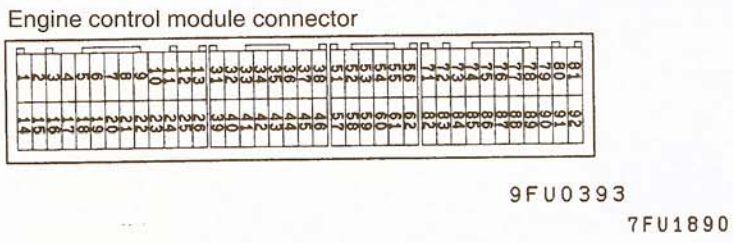


### OPERATION

- The vehicle speed sensor is incorporated within the speedometer; it converts vehicle speed data to pulse signals and inputs those signals to the engine control module. The engine control module, based upon those signals, regulates the idle air control motor, etc.
- The vehicle speed sensor, by intermitting by the lead switch the flow (to ground) of the approximately 5 V voltage applied from the engine control module, produces vehicle speed signals.

### TROUBLESHOOTING HINTS

If there is damaged or disconnected wiring or a short-circuit in the vehicle speed sensor signal circuit, the engine may stall when the vehicle speed is reduced and the vehicle is stopped.

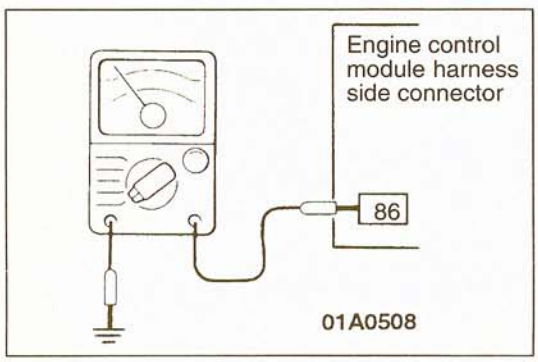


### HARNESS INSPECTION

**STEP 1. Check for continuity in the vehicle speed sensor output circuit.**

- Engine control module connector: Disconnected
- Move the vehicle.

**Continuity: Continuity and no-continuity are repeate alternately.**

**OK: GO TO STEP 4**

**NG: GO TO STEP 2**

**TSB Revision**

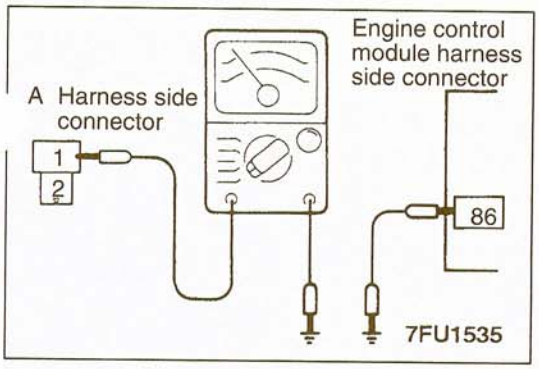


**STEP 2. Check for an open or short-circuit between the vehicle speed sensor and the engine control module.**

- Engine control module connector: Disconnected
- Vehicle speed sensor connector: Disconnected

**OK: GO TO STEP 3**

**NG: Repair the harness. (A1 – 86)**

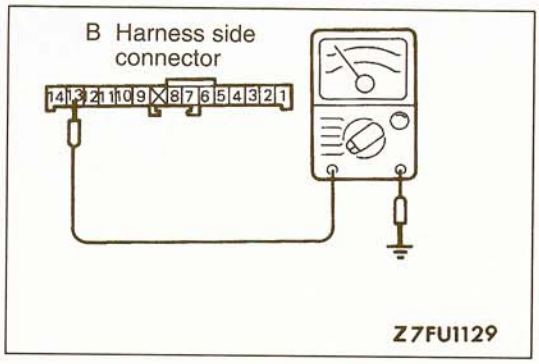


**STEP 3. Check for continuity in the ground circuit.**

- Vehicle speed sensor connector: Disconnected

**OK: GO TO STEP 4**

**NG: Repair the harness. (B13 – Ground)**

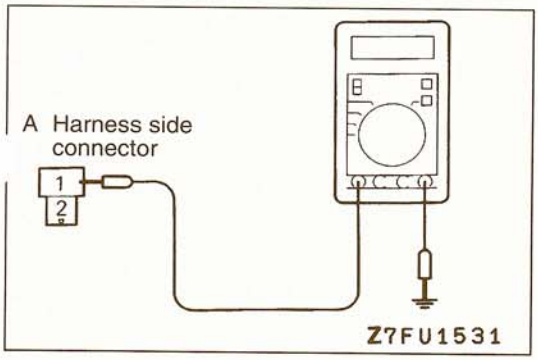


**STEP 4. Measure the applied voltage.**

- Vehicle speed sensor connector: Disconnected
- Engine control module connector: Connected
- Ignition switch: ON

**Voltage (V): 4.5 – 4.9**

**OK: STOP**

**NG: Replace the engine control module.**

**SENSOR INSPECTION**

Refer to GROUP 54 – Meters and Gages.

## POWER STEERING PRESSURE SWITCH

13110290035

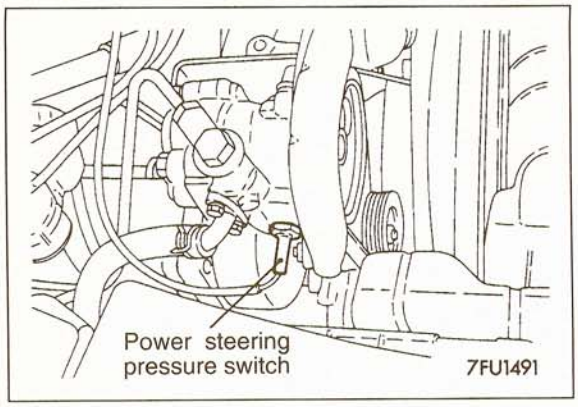


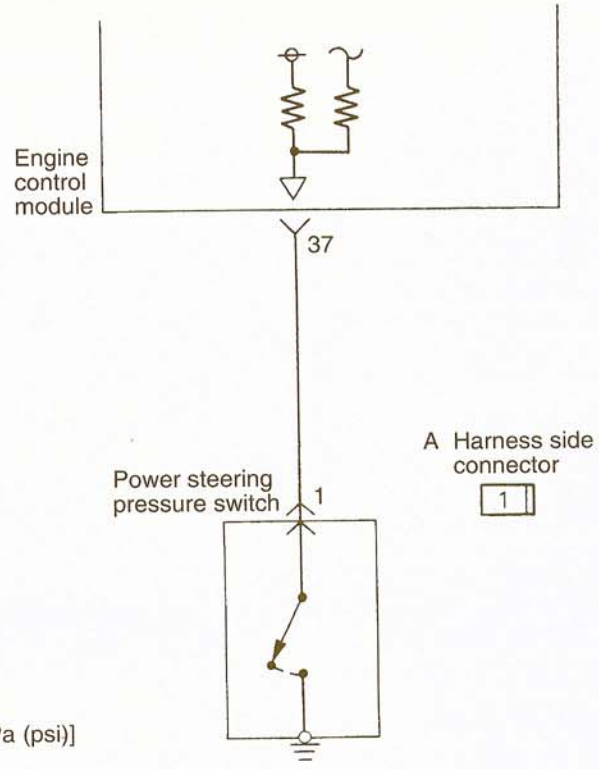


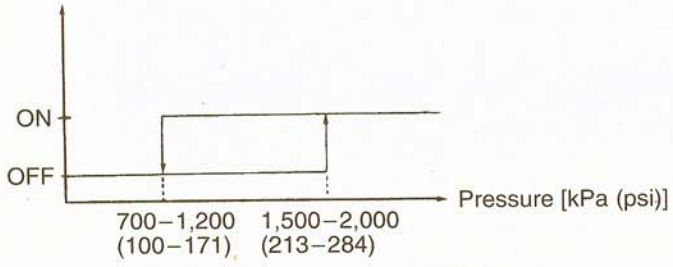


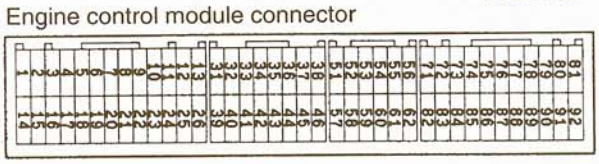


7FU1891

### OPERATION

- The power steering pressure switch converts presence/absence of power steering load into low/high voltage and inputs it to the engine control module, which then controls the idle air control motor based on this signal.
- The battery positive voltage in the engine control module is applied through a resistor to the power steering pressure switch. Steering operation causes the power steering fluid pressure to increase, turning the switch on. As a result, continuity is produced between the battery positive terminal and the ground. This causes the power steering fluid pressure terminal voltage to go from high to low.

## INSPECTION

### Using Scan Tool

| unction | Item No. | Data display | Check condition | Steering wheel | Normal display |
|---|---|---|---|---|---|
| Data reading | 27 | Switch state | Engine: Idling | Steering wheel neutral position (wheels straight-ahead direction) | OFF |
| | | | | Steering wheel half turn | ON |

### Checking Fluid Pressure

| Steering wheel | Oil pump delivery pressure (ref. value) |
|---|---|
| Straight forward | 700–1,200 kPa (100–171 psi) |
| Turned | 1,500–2,000 kPa (213–284 psi) |

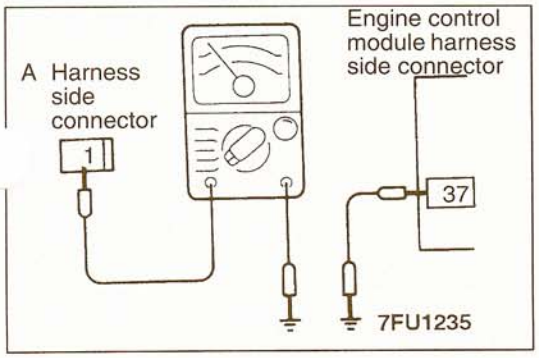


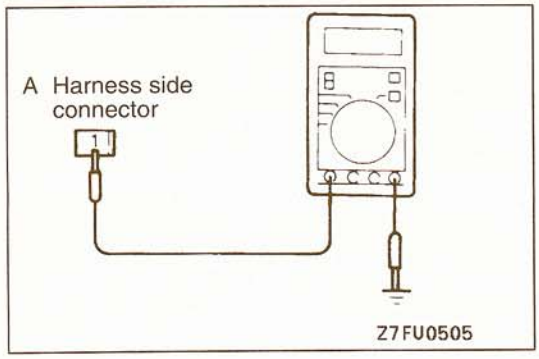


### HARNESS INSPECTION

**STEP 1. Check for an open or short-circuit between the power steering pressure switch and the engine control module.**

- Power steering pressure switch connector: Disconnected
- Engine control module connector: Disconnected

**OK: GO TO STEP 2**

**NG: Repair the harness. (A1 – 37)**

**STEP 2. Measure the applied voltage.**

- Power steering pressure switch connector: Disconnected
- Engine control module connector: Connected
- Ignition switch: ON

**Voltage (V): Battery positive voltage**

**OK: STOP**

**NG: Replace the engine control module.**

### SENSOR INSPECTION

Refer to GROUP 37A – On-vehicle Service.

## AIR CONDITIONING SWITCH AND COMPRESSOR CLUTCH RELAY

13110300035

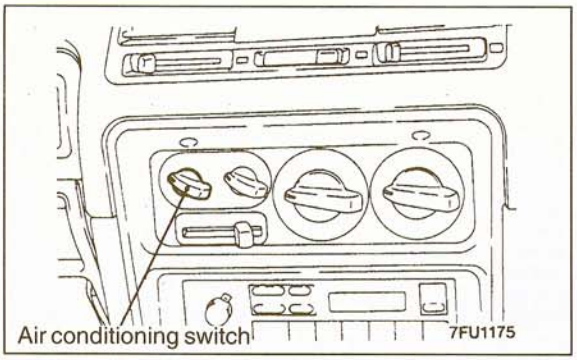


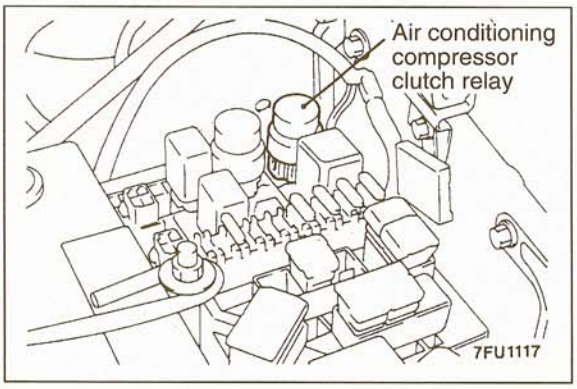


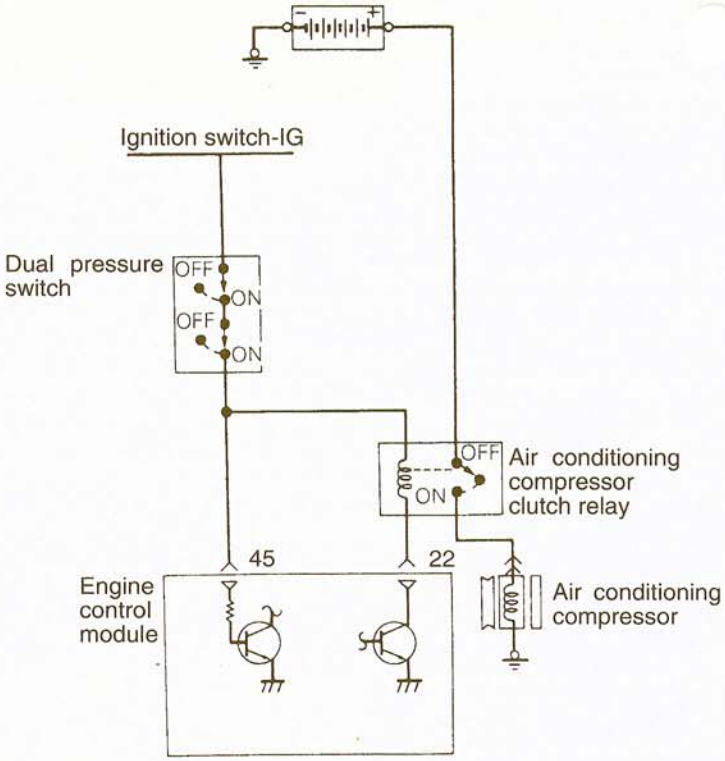


Engine control module connector

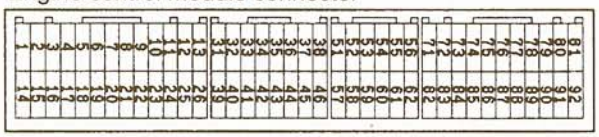

9FU0393

7FU1892

### OPERATION

- The air conditioning switch applies battery positive voltage to the engine control module when the air conditioning is switched ON.
- When the air conditioning signals are input, the engine control module activates the idle air control motor, and also switches ON the power transistor. As a result, current flows to the compressor clutch relay coil and the relay switch is switched ON; the air conditioning compressor's magnetic clutch is activated.

### TROUBLESHOOTING HINTS

If the air conditioning compressor's magnetic clutch is not activated when the air conditioning switch is switched on during idling, the cause is probably a malfunction of the air conditioning control system.

## INSPECTION

### Using Scan Tool

**<Air conditioning switch>**

| Function | Item No. | Data display | Check conditions | Air conditioning switch | Normal display |
|---|---|---|---|---|---|
| Data reading | 28 | Switch status | • Engine idling (The air conditioning compressor should be activated when the air conditioning switch is switched on.) | OFF | OFF |
| | | | | ON | ON |

**<Air conditioning compressor clutch relay>**

| Function | Item No. | Data display | Check conditions | Air conditioning switch | Normal display |
|---|---|---|---|---|---|
| Data reading | 49 | Air conditioning compressor clutch relay status | Engine: Idling after having warmed up | OFF | OFF (Compressor clutch not activated) |
| | | | | ON | ON (Compressor clutch not activated) |

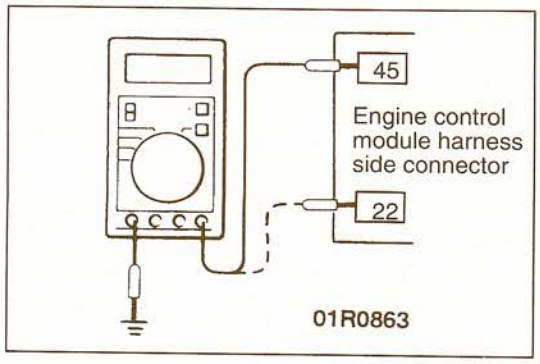


### HARNESS INSPECTION

**STEP 1. Measure the power supply voltage of the air conditioning circuit.**

- Engine control module connector: Disconnect
- Ignition switch: ON
- Air conditioning switch: ON

**Voltage (V): 6 or higher**

**OK: STOP**

**NG: Check the air conditioning circuit.**

### SENSOR INSPECTION

**Air Conditioning Switch Check**

Refer to GROUP 55 – Heater Control Assembly.

**Air Conditioning Compressor Clutch Relay Check**

Refer to GROUP 55 – On-vehicle Service.

## KNOCK SENSOR <DOHC>

13110310021

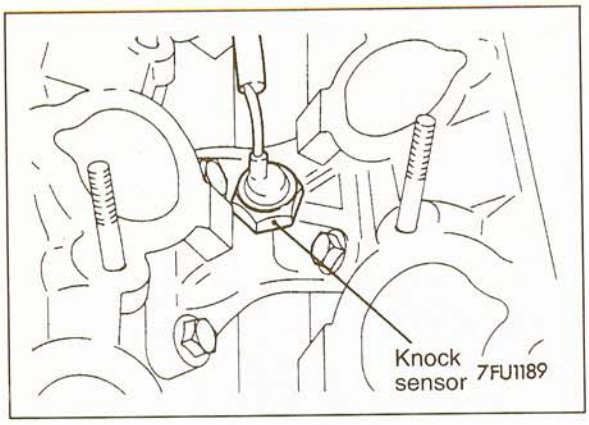


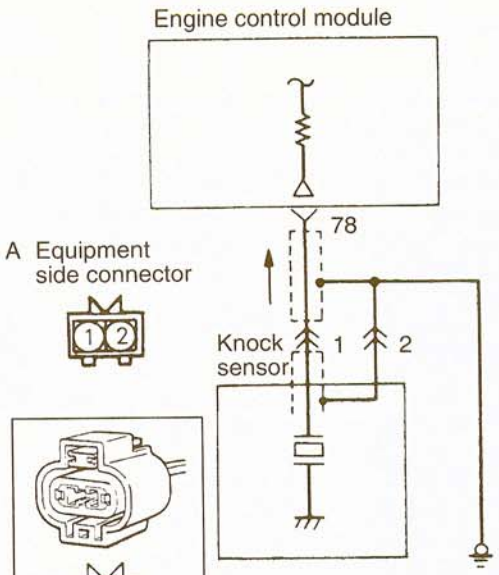


Engine control module connector

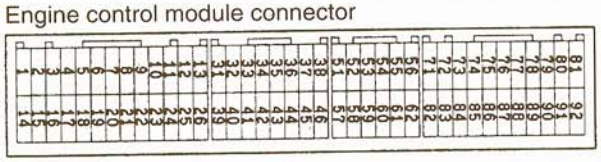

9FU0393




A Harness side connector

7FU1075

7FU1893

### OPERATION

The knock sensor converts cylinder block vibrations due to knocking into voltage according to the strength of the vibrations and inputs it to the engine control module. The engine control module controls the delay in spark timing according to this signal.

### TROUBLESHOOTING HINTS

When knocking occurs when driving at maximum load, the following troubles, other than the knoc sensor, can be inferred.

(1) Incorrect spark plug heat rating
(2) Incorrect gasoline
(3) Incorrect standard spark timing adjustment

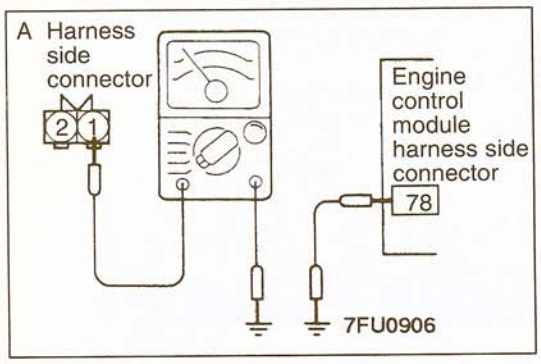


### HARNESS INSPECTION

**STEP 1. Check for an open circuit or a short-circuit to ground between the knock sensor and the engine control module.**

- Knock sensor connector: Disconnected
- Engine control module connector: Disconnected

**OK: GO TO STEP 2**

**NG: Repair the harness. (A1 – 78)**

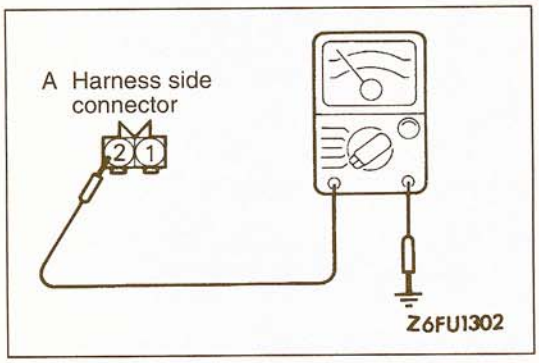


**STEP 2. Check for continuity in the ground circuit.**

- Knock sensor connector: Disconnected

**OK: STOP**

**NG: Repair the harness. (A2 – Ground)**

TSB Revision

## ELECTRICAL LOAD SWITCH <DOHC>

13110320024

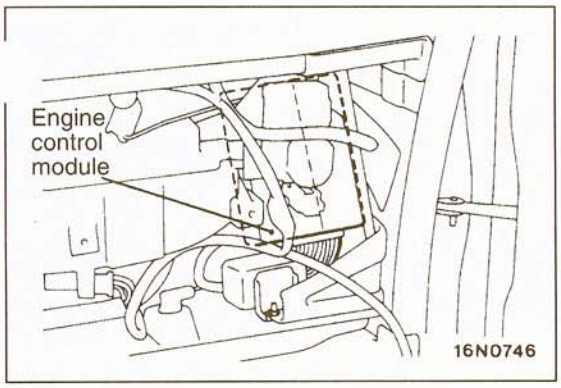


Engine control module connector

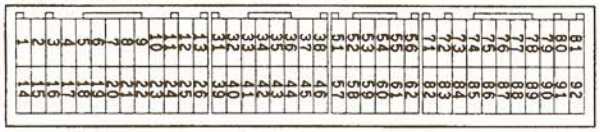

9FU0393

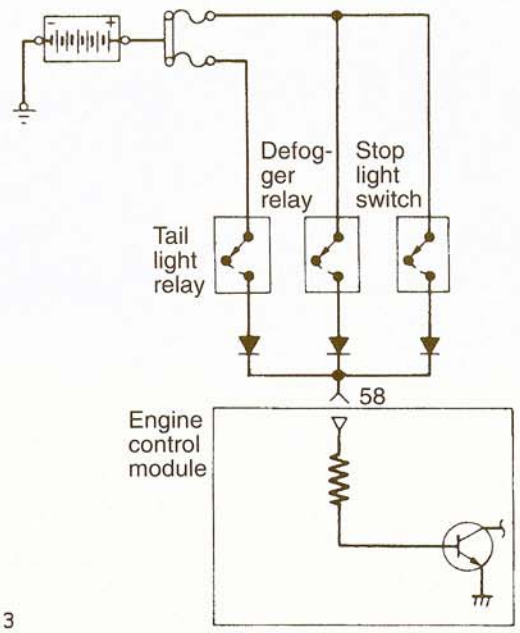


7FU0688

7FU1894

### OPERATION

- The electrical load switch inputs the ON/OFF condition of the switch of equipment which consumes a large amount power during idling (equipment with a large electrical load) to the engine control module. The engine control module controls the idle air control motor based on this signal.
- When the switch of the equipment which creates a large electrical load is turned on, battery positive voltage is applied to the engine control module to indicate that the equipment switch is turned on.

### INSPECTION

#### Using Scan Tool

| Function | Item No. | Data display | Check condition | Equipment state | Normal display |
|---|---|---|---|---|---|
| Data reading | 33 | Switch condition | Operation of equipment: OFF | Lighting switch only: OFF → ON | OFF → ON |
| | | | | Rear defogger switch only: OFF → ON | OFF → ON |
| | | | | Brake pedal only: Depressed → Released | ON → OFF |

**TSB Revision**

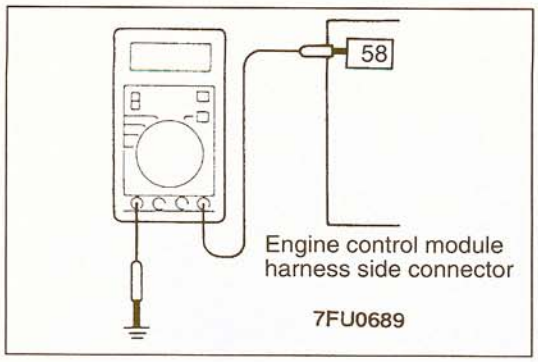


## HARNESS INSPECTION

**STEP 1. Measure the engine control module input voltage.**

- Engine control module connector: Disconnected
- Lighting switch: ON (Tail light relay on)

**Voltage (V): Battery positive voltage**

**OK: GO TO STEP 2**

**NG: Check the circuits which are related to the tail light relay.**

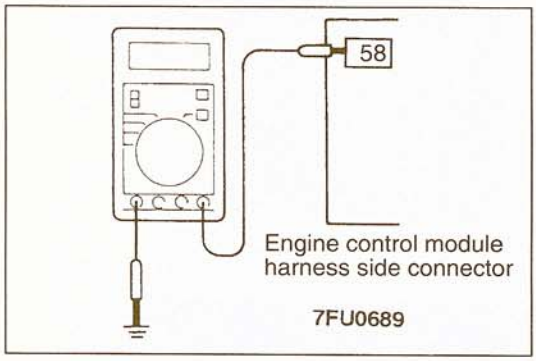


**STEP 2. Measure the engine control module input voltage.**

- Engine control module connector: Disconnected
- Defogger switch: ON (Defogger relay on)

**Voltage (V): Battery positive voltage**

**OK: GO TO STEP 3**

**NG: Check the circuits which are related to the defogger relay.**

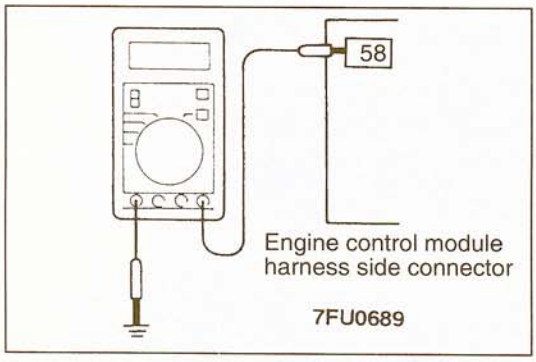


**STEP 3. Measure the engine control module input voltage.**

- Engine control module connector: Disconnected
- Brake pedal: Depressed (Stop light switch ON)

**Voltage (V): Battery positive voltage**

**OK: STOP**

**NG: Check the circuits which are related to the stop light relay.**

# MANIFOLD DIFFERENTIAL PRESSURE (MDP) SENSOR <SOHC – Federal, DOHC>

13110440010

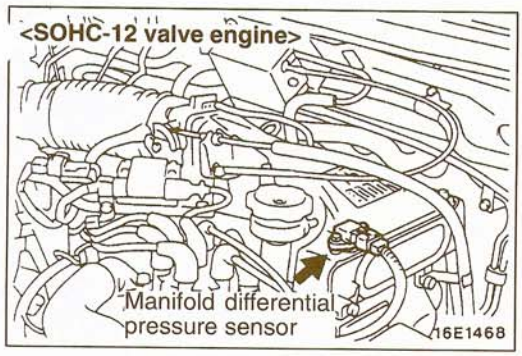


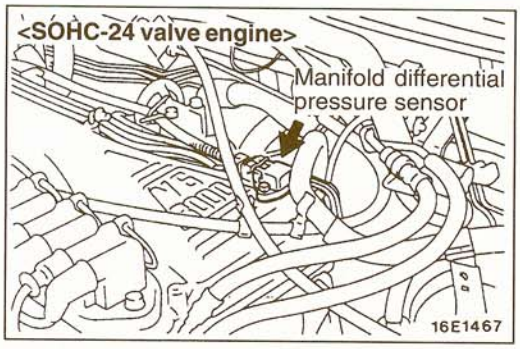


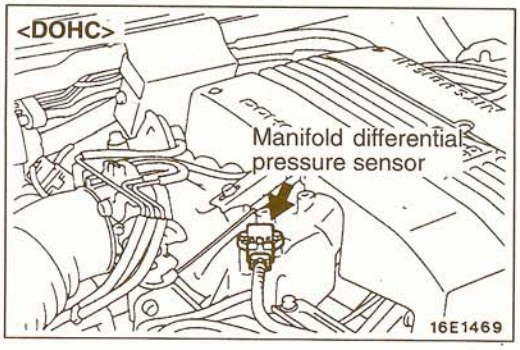


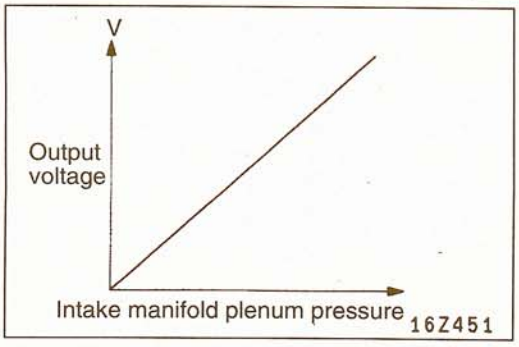


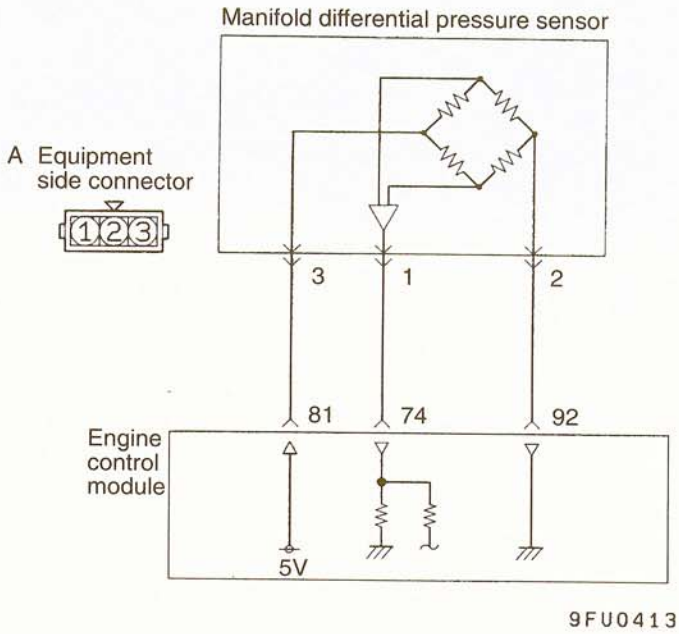


9FU0413

Engine control module connector

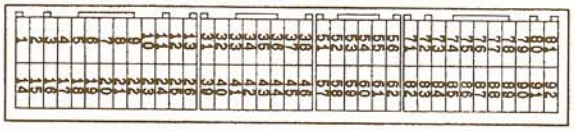

9FU0393

7FU1895

## OPERATION

- The manifold differential pressure sensor converts air pressures in the intake manifold plenum into voltage signals and send them to the engine control module.
  The engine control module monitors the EGR system using this signals and generates the diagnostic trouble code if there is an abnormality in the EGR system.
- 5 V of power is supplied to the manifold differential pressure sensor from the engine control module, and the sensor circuit ground is located in the engine control module.
- The manifold differential pressure sensor output voltage is proportioned to the intake manifold plenum pressure and sent to the engine control module.

TSB Revision

## INSPECTION

### Using Scan Tool

| Function | Item No. | Data display | Check condition | Engine state | Standard value |
|---|---|---|---|---|---|
| Data reading | 95 | Intake manifold plenum pressure | Engine: Warm-up | Idling | 23.4 – 36.8 kPa <SOHC-12 valve engine><br>24.9 – 38.3 kPa <SOHC-24 valve engine><br>27.0 – 40.4 kPa <DOHC> |

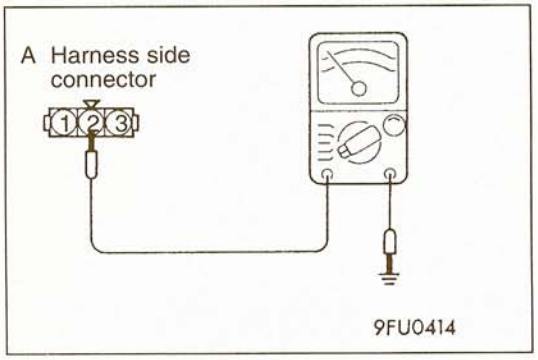


### HARNESS INSPECTION

**STEP 1. Check for continuity of the ground circuit.**

- Manifold differential pressure sensor connector: Disconnected

**OK: GO TO STEP 2**

**NG: Repair the harness. (A2 – 92)**

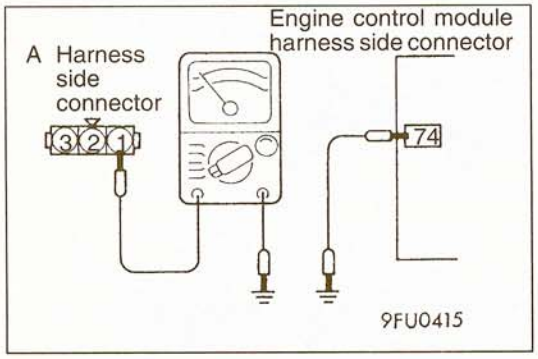


**STEP 2. Check for open-circuit, or short-circuit to ground, between the engine control module and the manifold differential pressure sensor**

- Manifold differential pressure sensor connector: Disconnected
- Engine control module connector: Disconnected

**OK: GO TO STEP 3**

**NG: Repair the harness. (A1 – 74)**

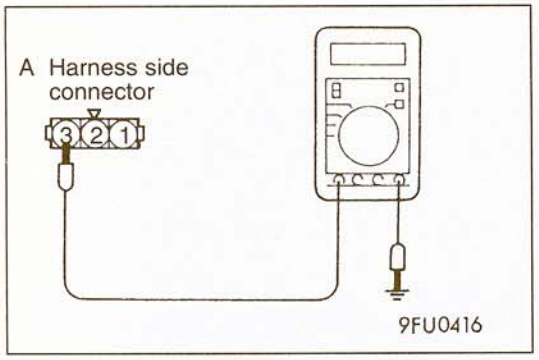


**STEP 3. Measure the sensor feed voltage to the manifold differential pressure sensor.**

- Manifold differential pressure sensor connector: Disconnected
- Engine control module connector: Connected
- Ignition switch: ON

**Voltage: 4.8 – 5.2 V**

**OK: STOP**

**NG: Replace the engine control module.**

## HEATED OXYGEN SENSOR <SOHC – Federal, DOHC>

13110340051

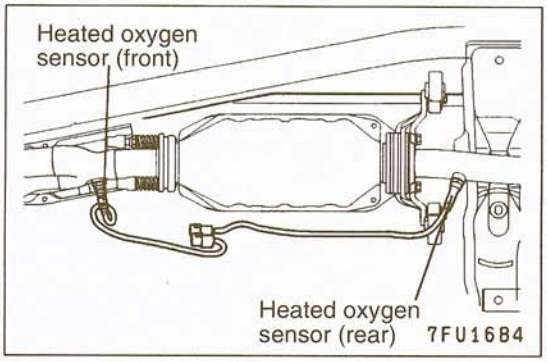


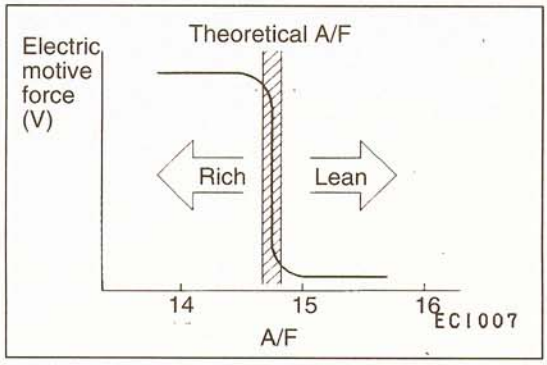


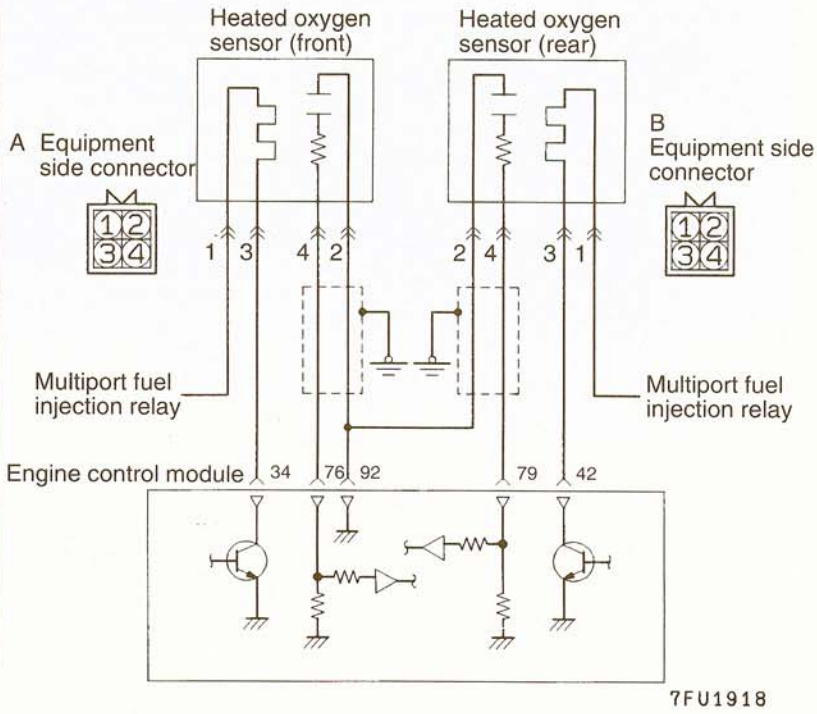


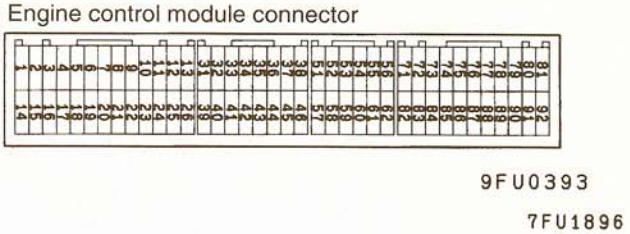


### OPERATION

- The heated oxygen sensor functions to detect the concentration of oxygen in the exhaust gas; it converts those data to voltage, and inputs the resulting signals to the engine control module.
- If the air/fuel mixture ratio is richer than the theoretical air/fuel mixture ratio (i.e., if the concentration of oxygen in the exhaust gas is low), a voltage of approximately 1 V is output; if the air/fuel mixture ratio in leaner than the theoretical air/fuel mixture ratio (i.e., if the concentration is dense), a voltage of approximately 0 V is output.
- The engine control module, based upon those signals, regulates the amount of fuel injection so that the air/fuel mixture ratio becomes the theoretical air/fuel mixture ratio.
- Battery positive voltage is supplied, by way of the MFI relay, to the heated oxygen sensor heater. As a result, the sensor element is heated by the heater, so that the heated oxygen sensor shows excellent response even if the temperature of the exhaust gas is low.

### TROUBLESHOOTING HINTS

Hint 1:
The exhaust gas purification performance will worsen it there is a malfunction of the heated oxygen sensor.
Hint 2:
If the heated oxygen sensor output voltage is outside the standard value even though the results of the checking of the heated oxygen sensor are normal, the cause is probably a malfunction of a component related to mixture control.

[Examples]
(1) Malfunction of injector
(2) Air is drawn into the intake manifold from a leaking gasket, etc.
(3) Malfunction of volume air flow sensor, intake air temperature sensor, barometric pressure sensor or engine coolant temperature sensor

**TSB Revision**

## INSPECTION

### Using Scan Tool

**<Heated Oxygen Sensor (front)>**

| Function | Item No. | Data display | Check condition | Engine condition | Standard value |
|---|---|---|---|---|---|
| Data reading | 11 | Sensor detection voltage | Engine: Warm-up (Make the mixture lean by engine speed reduction, and rich by racing) | When sudden deceleration from 4,000 r/min | 200 mV or lower |
| | | | | When engine is suddenly raced | 600–1,000 mV |
| | | | Engine: Warm-up (Using the heated oxygen sensor signal, check the air/fuel mixture ratio and also check the condition of control by the engine control module. | Idle speed | Changes repeatdly between 400 mV or lower and 600–1,000 mV |
| | | | | 2,500 r/min | |

**<Heated Oxygen Sensor (rear)>**

| Function | Item No. | Data display | Check condition | Engine state | Standard value |
|---|---|---|---|---|---|
| Data reading | 59 | Sensor voltage | • Transaxle: Second <M/T>, L range <A/T><br>• Accelerate the vehicle with wide open throttle. | 3,500 r/min | 600–1,000 mV |

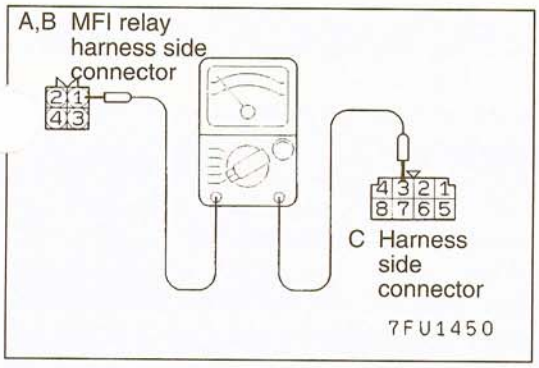


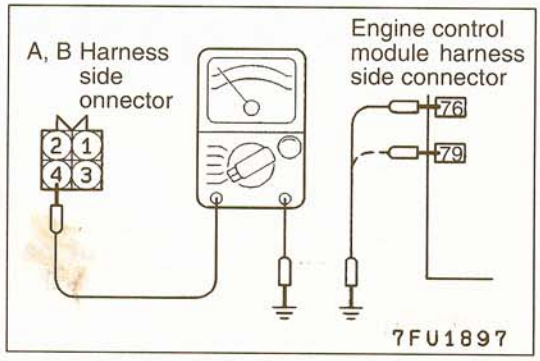


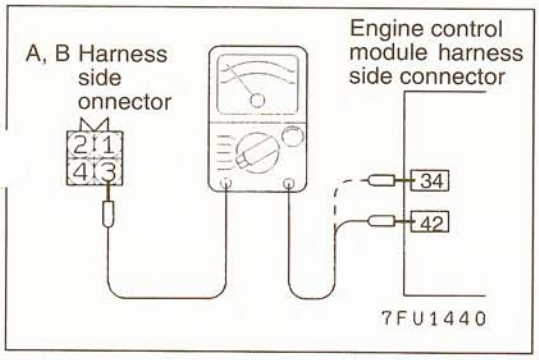


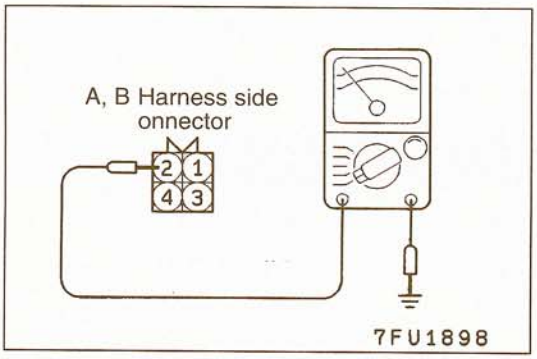


## HARNESS INSPECTION

**STEP 1. Check for continuity between the heated oxygen sensor and the MFI relay.**

- MFI relay connector: Disconnected
- Heated oxygen sensor connector: Disconnected

NOTE
- Touch the ohmmeter probes to both ends of the harness.

**OK: GO TO STEP 2**

**NG: Repair the harness. (A1 – C3, B1 – C3)**

**STEP 2. Check for an open circuit or a short-circuit to ground between the heated oxygen sensor and the engine control module.**

- Heated oxygen sensor connector: Disconnected
- Engine control module connector: Disconnected

**OK: GO TO STEP 3**

**NG: Repair the harness. (A4 – 76, B4 – 79)**

**STEP 3. Check for an open circuit or a short-circuit to ground between the heated oxygen sensor and the engine control module.**

- Heated oxygen sensor connector: Disconnected
- Engine control module connector: Disconnected

**OK: GO TO STEP 4**

**NG: Repair the harness. (A3 – 34, B3 – 42)**

**STEP 4. Check for continuity in the ground circuit.**

- Heated oxygen sensor connector: Disconnected
- Engine control module connector: Disconnected

**OK: STOP**

**NG: Repair the harness. (A2 – 72, B2 – 72)**

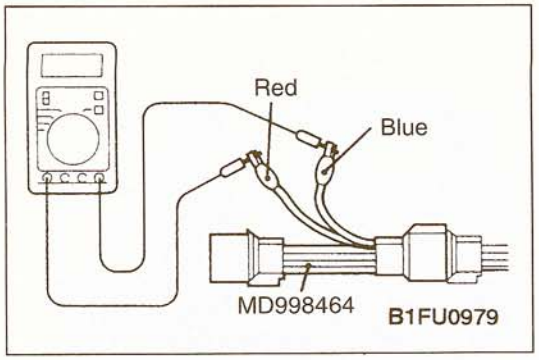


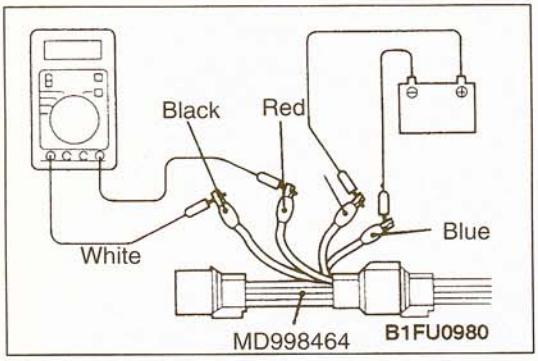


## SENSOR INSPECTION

(1) Disconnect the connector to the heated oxygen sensor, then use the special tool (test harness) to make connections with the connection on the heated oxygen sensor side.
(2) Check that there is continuity between terminal (1) (red clip of the special tool) and terminal (3) (blue clip) of the heated oxygen sensor connector [approx. 12 Ω at a temperature of 20°C (68°F)].
(3) If there is no continuity, replace the heated oxygen sensor.

(4) Warm up the engine until the coolant temperature is 80°C (176°F) or higher.
(5) Using jumper wires, connect terminal (1) (red clip of the special tool) and terminal (3) (blue clip) of the heated oxygen sensor with the positive battery terminal and negative battery terminal respectively.

**Caution**
**When connecting the jumper wires, be careful not to connect them to the wrong terminals, since this could damage the heated oxygen sensor.**

(6) Connect a digital voltmeter to terminal (2) (black clip of the special tool) and terminal (4) (white clip).
(7) While repeatedly racing the engine, measure the heated oxygen sensor's output voltage.

**Standard value:**

| Engine | Heated Oxygen Sensor Output Voltage | Remarks |
|---|---|---|
| During racing | 0.6–1.0 V | If the air-fuel ratio becomes rich while repeatedly racing the engine, the output of the heated oxygen sensor will be 0.6–1.0 V if it is normal. |

(8) If the measurements are not as specified, the cause is probably a malfunction of the heated oxygen sensor.

NOTE
For removal and installation of the heated oxygen sensor, refer to GROUP 15 – Exhaust Pipe, Muffler and Catalytic Converter.

## HEATED OXYGEN SENSOR <SOHC – California>

13110340068

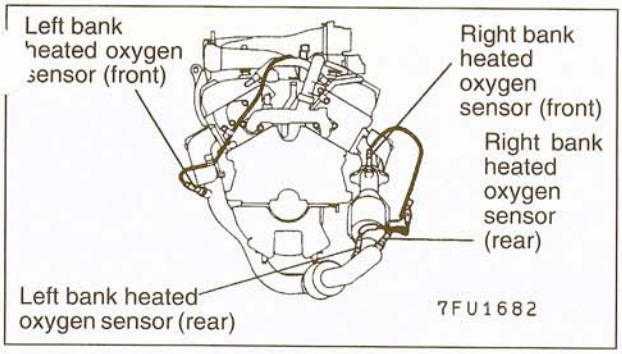


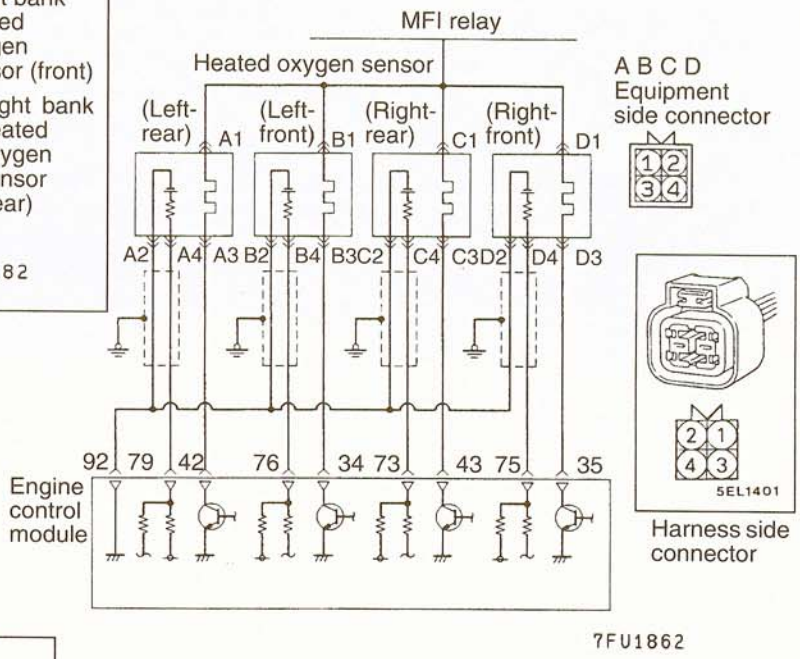


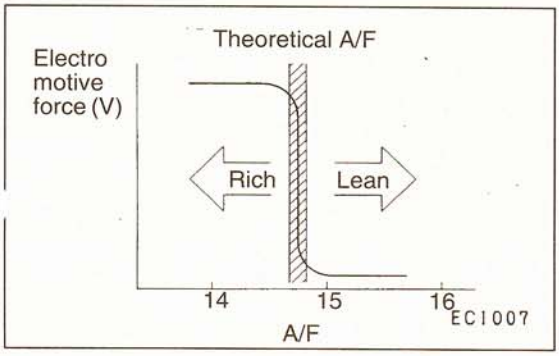


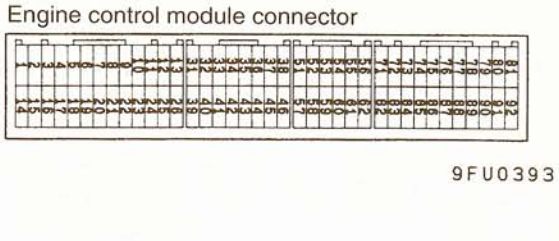


### OPERATION

Refer to P.13A-117.

### TROUBLESHOOTING HINTS

Refer to P.13A-117.

### INSPECTION

#### Using Scan Tool

#### <Heated Oxygen Sensor (front)>

| Function | Item No. | Data display | Check condition | Engine condition | Standard value |
|---|---|---|---|---|---|
| Data reading | 11 (Right bank)<br>39 (Left bank) | Sensor detection voltage | Engine: Warm-up (Make the mixture lean by engine speed reduction, and rich by racing) | When sudden deceleration from 4,000 r/min | 200 mV or lower |
| | | | | When engine is suddenly raced | 600–1,000 mV |
| | | | Engine: Warm-up (Using the heated oxygen sensor signal, check the air/fuel mixture ratio, and also check the condition of control by the engine control module) | Idling | Changes repeatdly between 400 mV or lower and 600–1,000 mV |
| | | | | 2,500 r/min | |

**TSB Revision**

**<Heated Oxygen Sensor (rear)>**

| Function | Item No. | Data display | Check condition | Engine state | Standard value |
|---|---|---|---|---|---|
| Data reading | 59 (Right bank)<br>69 (Left bank) | Sensor voltage | • Transaxle: Second <M/T>, L range <A/T><br>• Drive with wide open throttle | 3,500 r/min | 600–1,000 mV |

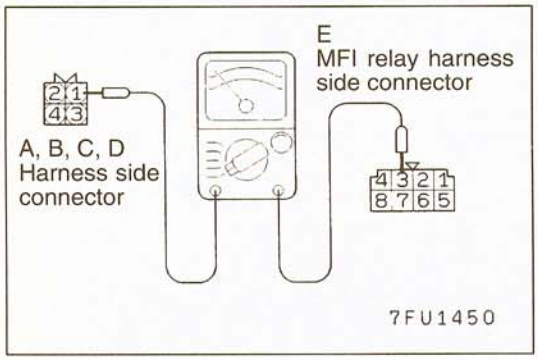


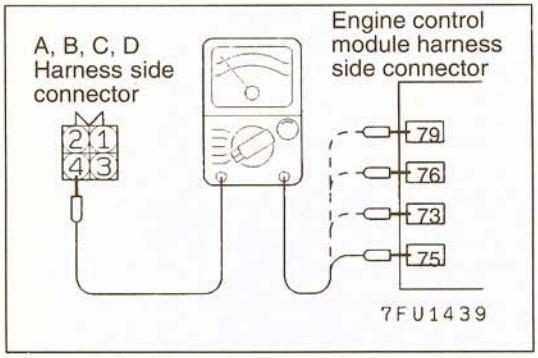


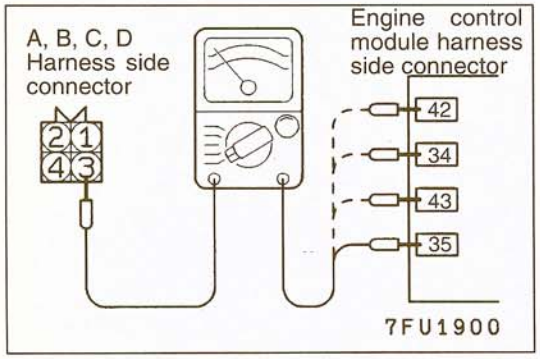


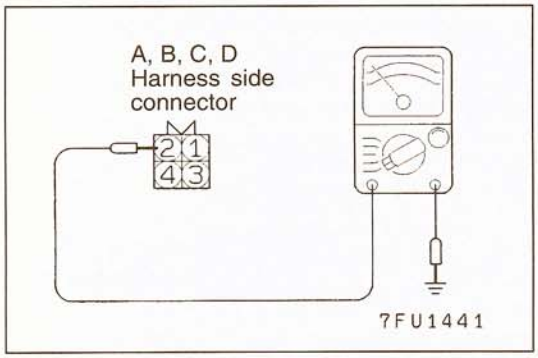


**HARNESS INSPECTION**

**STEP 1. Check for continuity between heated oxygen sensor and MFI relay.**

- MFI relay connector: Disconnected
- Heated oxygen sensor connector: Disconnected

NOTE
Insert the probes of the circuit tester into both ends of the harness.

**OK: GO TO STEP 2**

**NG: Repair the harness. (A, B, C, D1 – E3)**

**STEP 2. Check for an open-circuit, or a short-circuit to ground, between the engine control module and the heated oxygen sensor.**

- Heated oxygen sensor connector: Disconnected
- Engine control module connector: Disconnected

**OK: GO TO STEP 3**

**NG: Repair the harness. (A4 – 79, B4 – 76, C4 – 73, D4 – 75)**

**STEP 3. Check for an open-circuit, or a short-circuit to ground, between the engine control module and the heated oxygen sensor.**

- Heated oxygen sensor connector: Disconnected
- Engine control module connector: Disconnected

**OK: GO TO STEP 4**

**NG: Repair the harness. (A3 – 42, B3 – 34, C3 – 43, D3 – 35)**

**STEP 4. Check for continuity of the ground circuit.**

- Heated oxygen sensor connector: Disconnected

**OK: STOP**

**NG: Repair the harness. (A2, B2, C2, D2 – 92)**

**TSB Revision**

## SENSOR INSPECTION

**<Heated oxygen sensor (front)>**

Refer to P.13A-120.

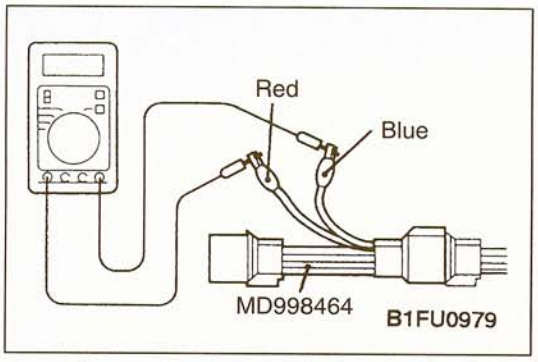


**<Heated oxygen sensor (rear)>**

(1) Disconnect the connector to the heated oxygen sensor, then use the special tool (test harness) to make connections with the connection on the heated oxygen sensor side.
(2) Check that there is continuity between terminal (1) (red clip of the special tool) and terminal (3) (blue clip) of the heated oxygen sensor connector [approx. 12 Ω at a temperature of 20°C (68°F)].
(3) If there is no continuity, replace heated oxygen sensor.

NOTE

1. If the scan tool dose not display the standard value although no abnormality is found by the abovementioned continuity test and harness check, replace the heated oxygen sensor.
2. For removal and installation of the oxygen senosr, refer to GROUP 15 – Exhaust Pipe, Muffler and Catalytic Converter.

## INJECTORS

13110350030

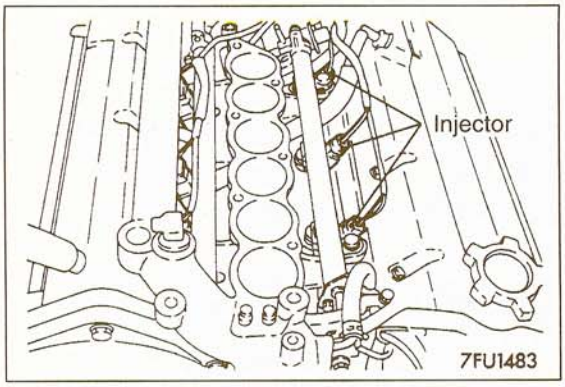


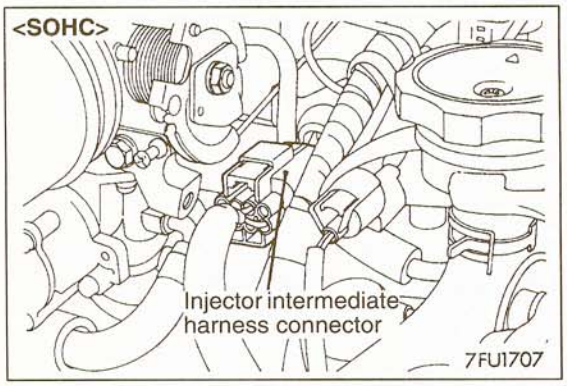


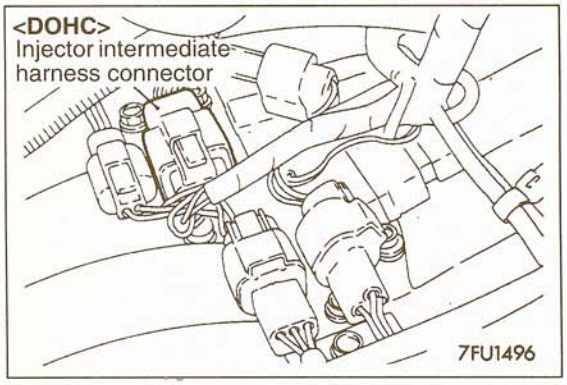


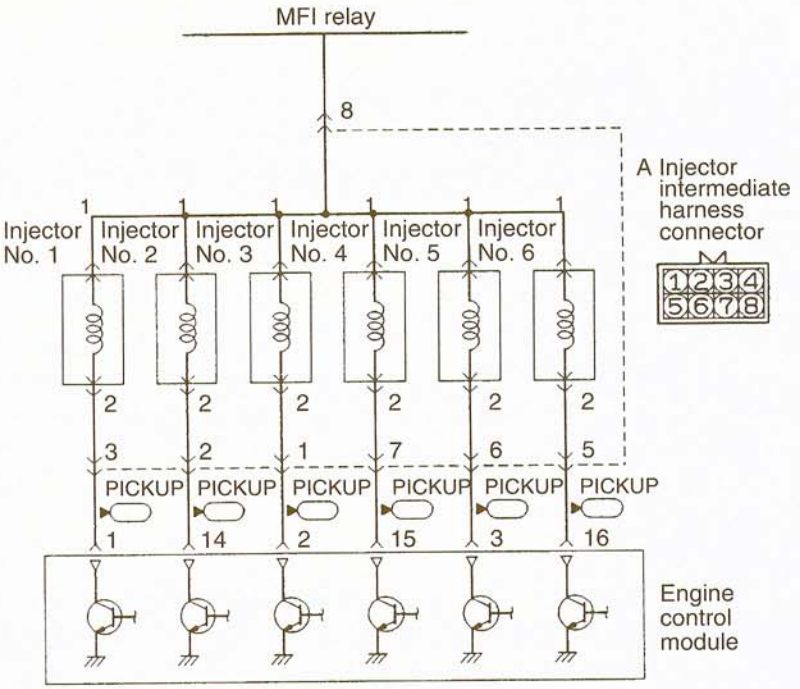


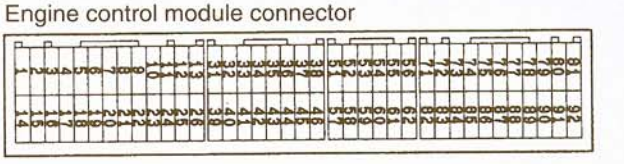


7FU1901

### OPERATION

- The injector is an injection nozzle with a solenoid which injects fuel according to the injection signal coming from the engine control module.
- The injector has a fixed nozzle opening area and the fuel pressure against manifold inside pressure is regulated to a fixed level. Therefore, the volume of fuel injected by the injector is determined by the time during which the needle valve is open, namely, by the time during which the solenoid coil is energized.
- The battery positive voltage is applied through the MFI relay to this injector. When the engine control module turns on the power transistor in the unit, the solenoid coil is energized to open the injector valve, which then injects fuel.

## TROUBLESHOOTING HINTS

Hint 1:
If there is a problem with starting while the engine warm, perform the combustion test and check for leakage of the injectors.

Hint 2:
If the engine can't be started and the injectors are not activated during cranking, the cause is probably a malfunction such as described below, not a problem with the injectors.
(1) Malfunction of power supply circuit or ground circuit of engine control module
(2) Malfunction of MFI relay
(3) Malfunction of crankshaft position sensor and/or camshaft position sensor

Hint 3:
If there is a cylinder for which the idling condition does not change when, during idling, the fuel injection of the injectors is cut off in sequence, check that cylinder as described below.
(1) Check the injector and harness.
(2) Check the spark plugs and the high-tension cable.
(3) Check the compression pressure.

Hint 4:
If the injector activation time is outside the standard value even though the results of the checking of the injector's harness and of the injector itself are normal, the cause is probably one of the following.
(1) Incomplete combustion inside a cylinder (Malfunction of spark plugs, ignition coil, compression pressure, etc.)
(2) Increased engine resistance

## INSPECTION

### Using Scan Tool

**<Drive time>**

| Function | Item No. | Data display | Check conditions | Engine coolant temperature °C (°F) | Standard value ms |
|---|---|---|---|---|---|
| Data reading | 41 | Activation time*1 | Engine cranking | When 0 (32)*2 | 12.8 – 19.4 <SOHC-12 valve engine><br>13.3 – 20.1 <SOHC-24 valve engine, DOHC> |
| | | | | When 20 (68) | 36 – 54 <SOHC-12 valve engine><br>33 – 50 <SOHC-24 valve engine><br>38 – 57 <DOHC> |
| | | | | When 80 (176) | 8.2 – 12.4 <SOHC-12 valve engine><br>8.4 – 12.6 <SOHC-24 valve engine><br>8.5 – 12.9 <DOHC> |

| Function | Item No. | Data display | Check conditions | Engine condition | Standard value ms |
|---|---|---|---|---|---|
| Data reading | 41 | Activation time*3 | • Engine coolant temp: 85–95°C (185–203°F)<br>• Lights and all accessories: OFF<br>• Transmission: Neutral (P range for vehicles with A/T) | Idling | 2.3 – 3.5 <SOHC-12 valve engine><br>2.7 – 3.9 <SOHC-24 valve engine><br>2.5 – 3.7 <DOHC> |
| | | | | 2,500 r/min | 2.3 – 3.5 <SOHC-12 valve engine><br>2.7 – 3.9 <SOHC-24 valve engine><br>2.1 – 3.3 <DOHC> |
| | | | | When raced suddenly | Increases. |

NOTE
*1: Indicates the injector-activation time when the power source voltage is 11 V and the cranking speed is 250 r/min or less.
*2: At a coolant temperature of 0°C (32°F), there is synchronous injection for all six cylinders.
*3: For a new vehicle [driven approximately 500 km (300 miles) or less] the injector-activation may be about ten percent longer then indicated above.

**<Long-term fuel trim>**

| Function | Item No. | Data display | Chekc condition | Engine state | Standard value |
|---|---|---|---|---|---|
| Data reading | 81 | Appropriate range | Engine: after warm-up | Idling | –12.5 – 12.5 % |

**<Short-term fuel trim>**

| Function | Item No. | Data display | Chekc condition | Engine state | Standard value |
|---|---|---|---|---|---|
| Data reading | 82 | Appropriate range | Engine: after warm-up (during closed loop con-trol) | No load 2,500 r/min | –17 – 17 % |

**<Fuel control condition>**

| Function | Item No. | Data display | Chekc condition | Engine state | Standard value |
|---|---|---|---|---|---|
| Data reading | 86 | Control condition | Engine: after warm-up | 2,500 r/min | Closed loop |
| | | | | Racing | Open loop |

| Function | Item No. | Drive content | Check condition | Normal condition |
|---|---|---|---|---|
| Actuator test | 01 | No. 1 injector shut off | Engine: Idling after having warmed up (Shut off the injectors in sequence after engine has warmed up, and check the idling condition) | Changing from the idling condition (becoming less stable or stalling) |
| | 02 | No. 2 injector shut off | | |
| | 03 | No. 3 injector shut off | | |
| | 04 | No. 4 injector shut off | | |
| | 05 | No. 5 injector shut off | | |
| | 06 | No. 6 injector shut off | | |

**TSB Revision**

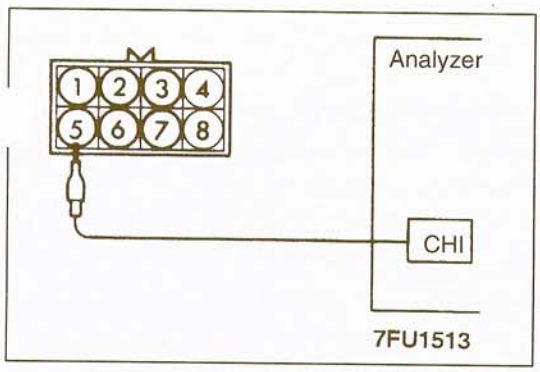


### Wave Pattern Inspection Using an Analyzer

**Measurement method**

(1) Disconnect the injector intermediate harness, and connect the special tool (harness connector MD998474).
(2) Connect the oscilloscope probes according to the details given in the table below.

| | No. 1 cylinder | No. 2 cylinder | No. 3 cylinder | No. 4 cylinder | No. 5 cylinder | No. 6 cylinder |
|---|---|---|---|---|---|---|
| Male connector side terminal (2) | 3 | 2 | 1 | 7 | 6 | 5 |
| Clip (lead wire) | Green (green and black) | White (white) | Blue (blue) | Yellow (yellow) | Red (red) | Black (black) |

**Alternative method (when test harness is not available)**

Connect the analyzer special patterns pickup to ECM terminals (1), (2), (3), (14), (15) and (16).

**Standard wave pattern**

Observation conditions

| | |
|---|---|
| Function | Special patterns |
| Pattern height | Variable |
| Variable knob Pattern selector | Display |
| Engine r/min | Idling |

Standard wave pattern

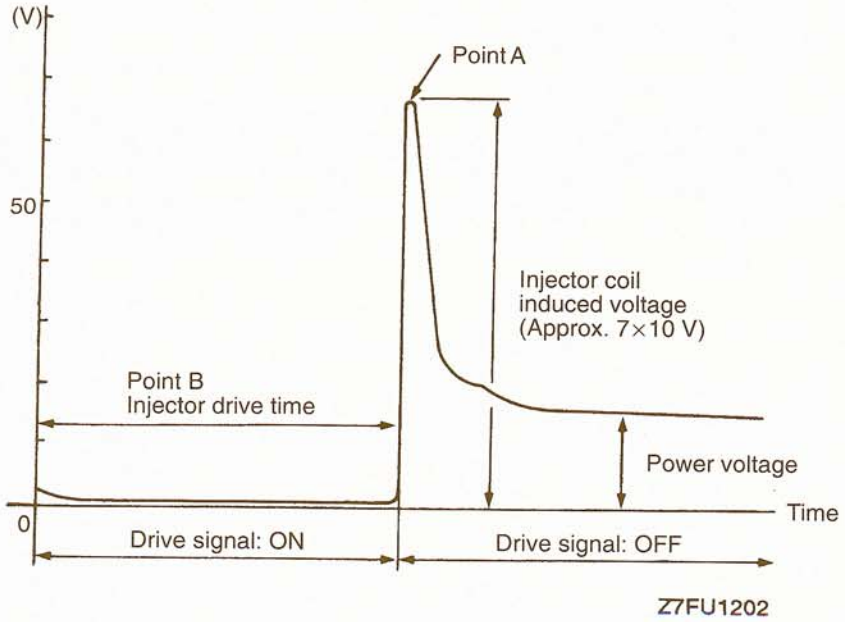

**Wave pattern observation points**

Point A: Height of injector coil induced voltage

| Contrast with standard wave pattern | Probable cause |
|---|---|
| Injector coil induced voltage is low or doesn't appear at all. | Short-circuit in the injector solenoid |

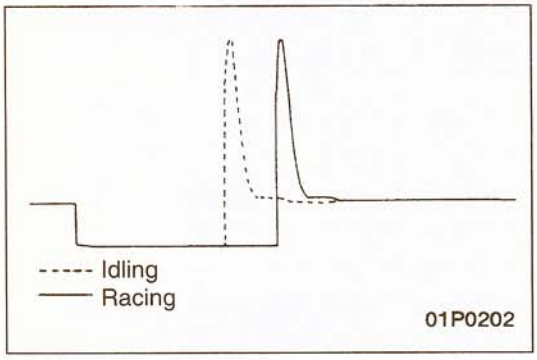


Point B: Injector drive time

- The injector drive timing will synchronized with the scan tool display.
- When the engine is suddenly raced, the drive time will be greatly extended at first, but the drive time will soon match the engine speed.

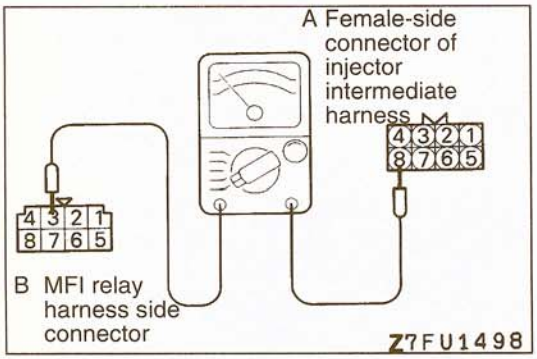


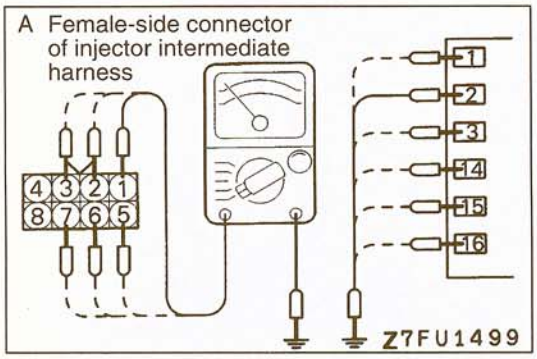


**HARNESS INSPECTION**

**STEP 1. Check for continuity between the injectors and the MFI relay.**

- Injector intermediate harness connector: Disconnected
- MFI relay connector: Disconnected

NOTE

- Touch the ohmmeter probes to both ends of the harness.

**OK: GO TO STEP 2**

**NG: Repair the harness. (A8 – B3)**

**STEP 2. Check for an open circuit or a short-circuit to ground between the injector and the engine control module.**

- Engine control module connector: Disconnected
- Injector intermediate harness connector: Disconnected

**OK: STOP**

**NG: Repair the harness. (A1 – 2, A2 – 14, A3 – 1, A5 – 16, A6 – 3, A7 – 15)**

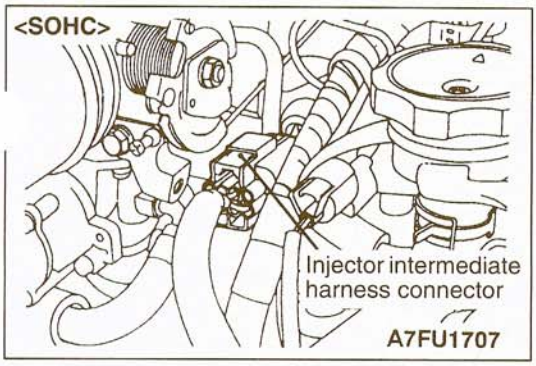


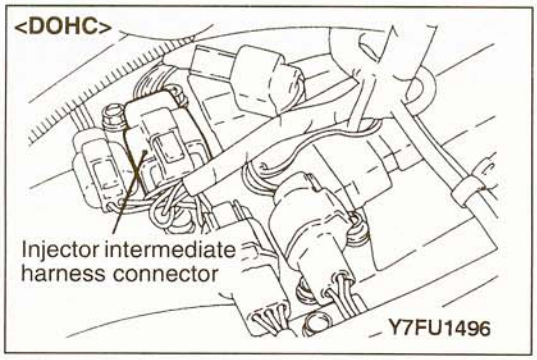


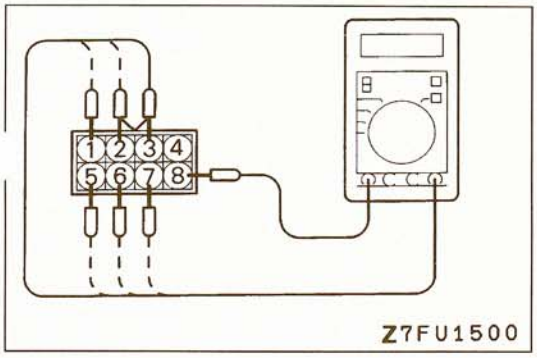


## ACTUATOR INSPECTION

### Measuring Resistance Between Terminals

(1) Disconnect the injector intermediate harness.

(2) Measure the resistance between the terminals.

| Injector No. | Measurement terminal | Resistance |
|---|---|---|
| No. 1 | 8–3 | 13–16 Ω (20°C) |
| No. 2 | 8–2 | |
| No. 3 | 8–1 | |
| No. 4 | 8–7 | |
| No. 5 | 8–6 | |
| No. 6 | 8–5 | |

(3) Connect the injector intermediate harness.

## IDLE AIR CONTROL MOTOR (STEPPER MOTOR)

13110360033

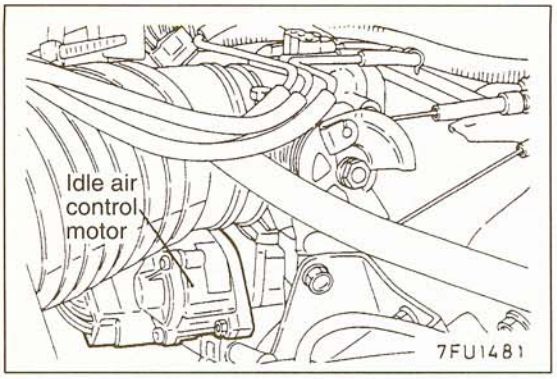


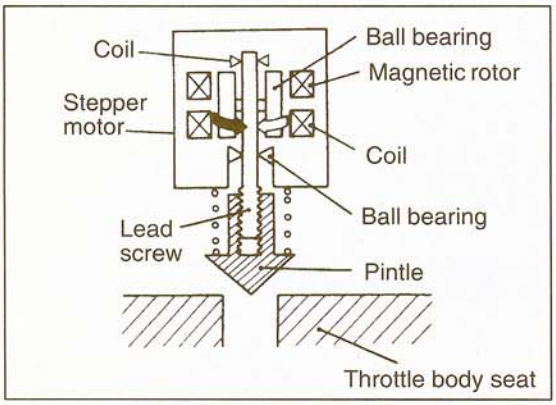


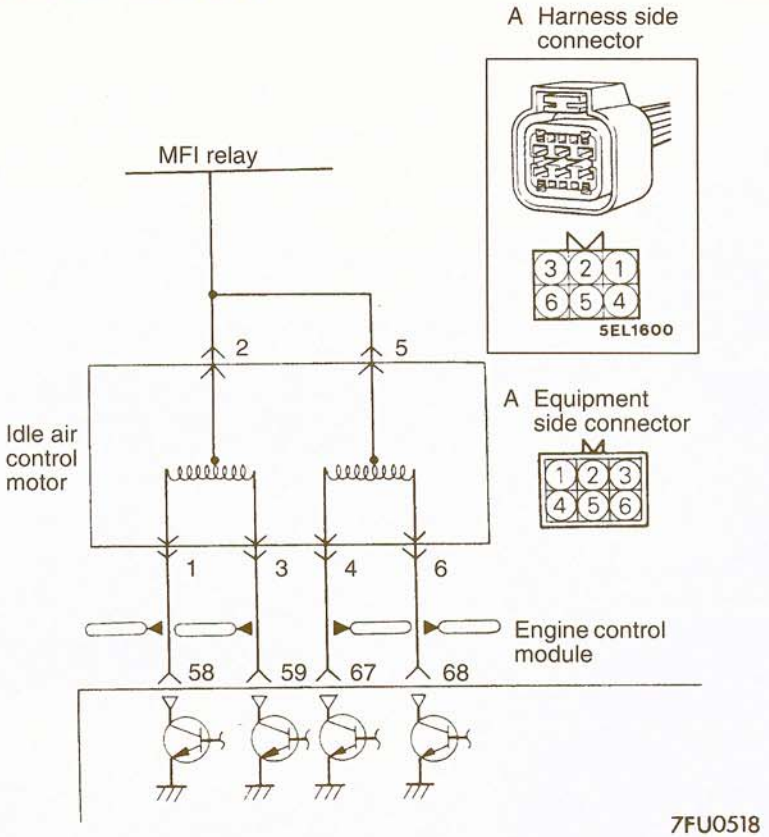


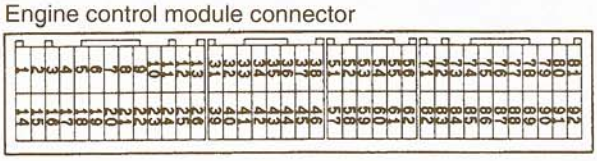


7FU1902

### OPERATION

- The amount of air taken in during idling is regulated by the opening and closing of the servo valve located in the air passage that bypasses the throttle valve.
- The servo valve is opened or closed by the activation of the stepper motor (incorporated within the idle air control motor in the forward or reverse direction.
- Battery positive voltage is supplied, by way of the MFI relay, to the coil of the stepper motor. The engine control module switches ON the power transistors (located within the engine control module) in sequential order, and, when current flows to the stepper motor coil, the stepper motor is activated in the forward or reverse direction.

## TROUBLESHOOTING HINTS

Hint 1:
If the number of stepper motor steps increases 100–120 steps or decreases to 0 step, the cause is probably a malfunction of the stepper motor or damaged or disconnected wiring of the harness.

Hint 2:
If the number of stepper motor steps is outside the standard value even through the results of the checking of the harness of the idle air control motor and of the component itself indicate no abnormal condition, the cause is probably one of the following.
(1) Incorrect adjustment of the standard idling speed.
(2) Deposits adhering to the throttle valve.
(3) Air drawn into the intake manifold from a leaking gasket, etc.
(4) Incomplete combustion inside a cylinder (Malfunction of spark plugs, ignition coil, injectors, compression pressure, etc.)

## INSPECTION

### Using Scan Tool

| Function | Item No. | Data display | Check conditions | Load conditions | Standard value STEP |
|---|---|---|---|---|---|
| Data reading | 45 | Stepper motor steps | • Engine coolant temperature: 85–95°C (185–203°F)<br>• Lights and all accessories: OFF<br>• Transmission: neutral (P range for vehicles with A/T)<br>• Closed throttle position switch: ON (The compressor clutch should be activated when the air conditioning switch is switched on.)<br>• Engine: Idling | • Air conditioning switch: OFF | 2–25 |
| | | | | • Air conditioning switch: OFF → ON | Increase by 10–70 |
| | | | | • Air conditioning switch: OFF<br>• Selector lever: N → D position | Increase by 5–50 |

NOTE
When the vehicle is new [driven approximately 500 km (300 miles) or less] the number of steps may be about 30 steps greater than the standard value indicated above.

**Caution**
**When the select lever is shifted to the D position, the brakes must be used to prevent the vehicle from moving forward.**

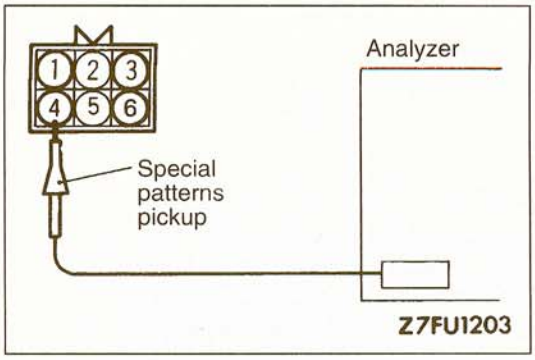


### Wave Pattern Inspection Using an Analyzer

### Measurement method

(1) Disconnect the stepper motor connector, and conne the special tool (test harness: MB998463) in betwee
(2) Connect the analyzer special patterns pickup to the stepper motor-side connector terminal (1) (red clip on the special tool), terminal (3) (green clip), terminal (4) (black clip) and terminal (6) (yellow clip) respectively.

### Alternative method (when test harness is not available)

Connect the analyzer special patterns pickup to ECM terminals (4), (5), (17) and (18).

### Standard wave pattern

### Observation conditions

| | |
|---|---|
| Function | Special patterns |
| Pattern height | High |
| Pattern selector | Display |
| Engine condition | Turn the ignition switch from OFF to ON (without starting the engine). |
| | While the engine is idling, turn the air conditioning switch to ON. |
| | Immediately after starting the warm engine (approx. 1 minute) |

Standard wave pattern

The wave pattern appears for an instant, but soon disappears.

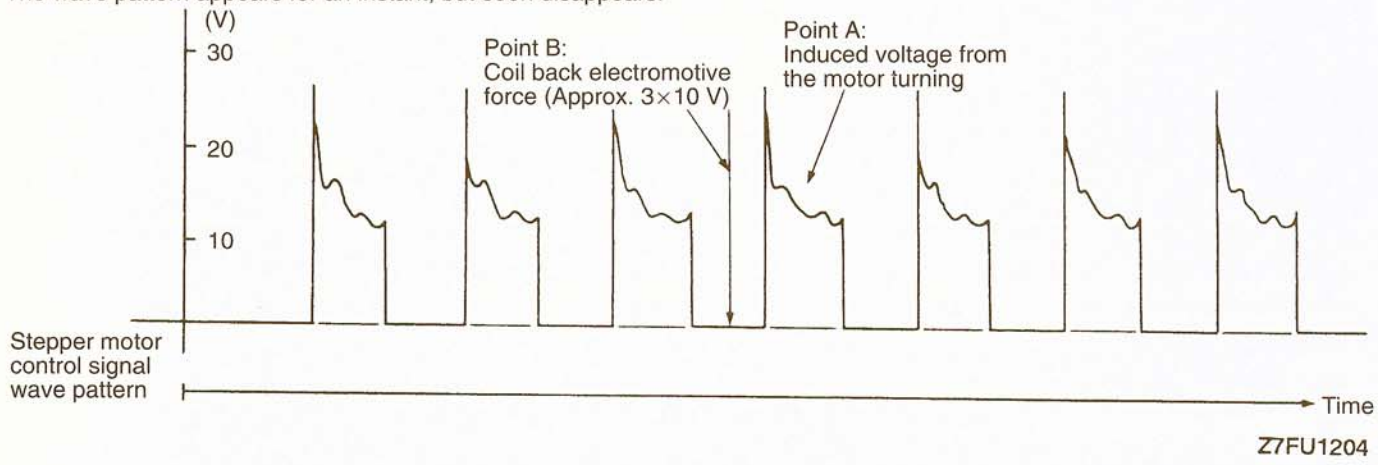


### Wave pattern observation points

Check that the standard wave pattern appears when the stepper motor is operating.

Point A: Presence or absence of induced voltage from the motor turning. (Refer to the abnormal wave pattern.)

| Contrast with standard wave pattern | Probable cause |
|---|---|
| Induced voltage does not appear or is extremely small. | Malfunction of motor |

Point B: Height of coil back electromotive force

| Contrast with standard wave pattern | Probable cause |
|---|---|
| Coil back electromotive force does not appear or is extremely small. | Short-circuit in the coil |

**TSB Revision**

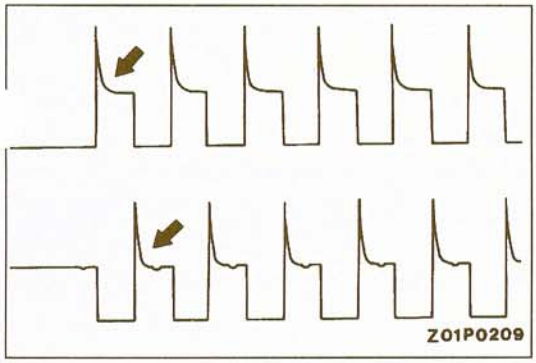


**Examples of abnormal wave patterns**

**Cause of problem**

Malfunction of motor (Motor is not operating)

**Wave pattern characteristics**

Induced voltage from the motor turning does not appear.

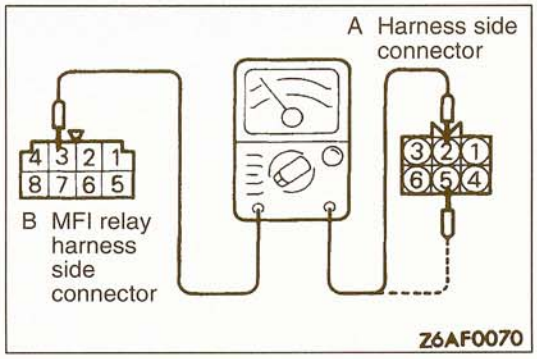


## HARNESS INSPECTION

**STEP 1. Check for continuity between the idle air control motor and the MFI relay.**

- Idle air control motor connector: Disconnected
- MFI relay connector: Disconnected

NOTE
- Touch the ohmmeter probes to both ends of the harness.

**OK: GO TO STEP 2**

**NG: Repair the harnesses. (A2 – B3, A5 – B3)**

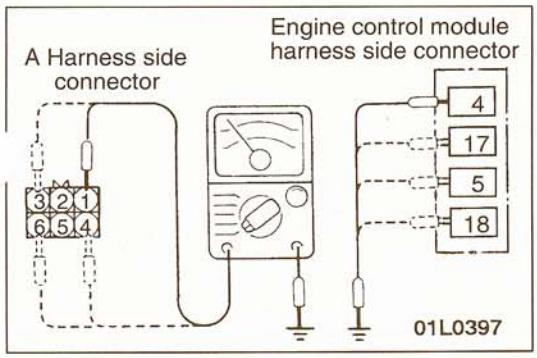


**STEP 2. Check for an open circuit or a short-circuit to ground between the idle air control motor and the engine control module.**

- Engine control module connector: Disconnected
- Idle air control motor connector: Disconnected

**OK: STOP ZXS**

**NG: Repair the harnesses. (A1 – 4, A3 – 17, A4 – 5, A6 – 18)**

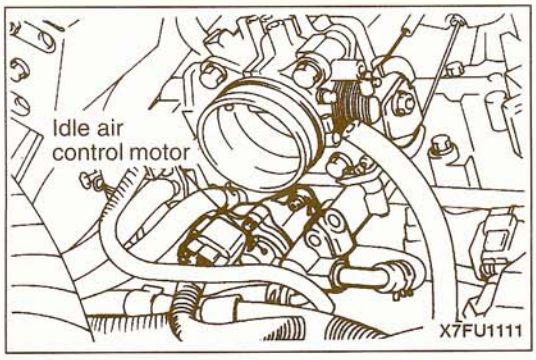


## ACTUATOR INSPECTION

**Checking Operation Sound**

(1) Check that the operating sound of the stepper motor can be heard over the idle air control motor when the ignition switch is turned to the ON position (without starting the engine).

(2) If no operating sound can be heard, check the stepper motor drive circuit. (If the circuit is good, a defective stepper motor or engine control module is suspected.)

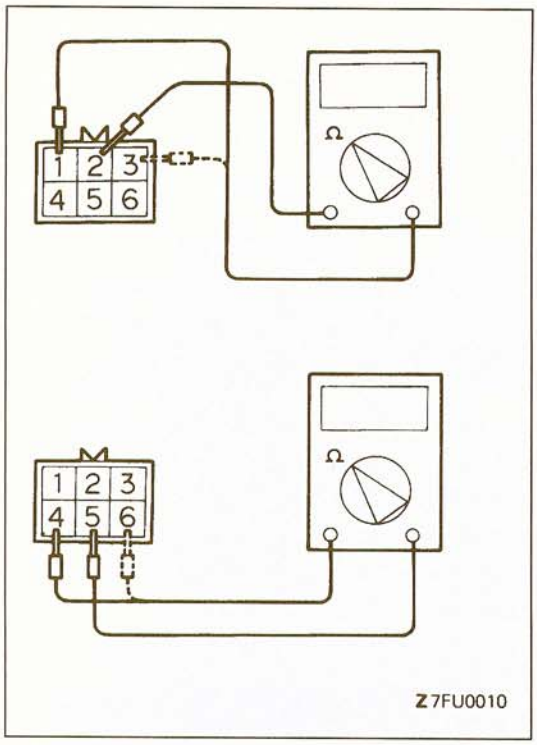


### Checking Coil Resistance

(1) Disconnect the idle air control motor connector and connect the special tool (test harness).
(2) Measure the resistance between terminal (2) (White cl of the special tool) of the connector at the idle air contro motor side and terminal (1) (red clip) or terminal (3) (blue clip).

**Standard value: 28–33 Ω [at 20°C (68°F)]**

(3) Measure the resistance between terminal (5) (green clip of the special tool) of the connector sat the idle air control motor side and terminal (6) (yellow clip) or terminal (4) (black clip).

**Standard value: 28–33 Ω [at 20°C (68°F)]**

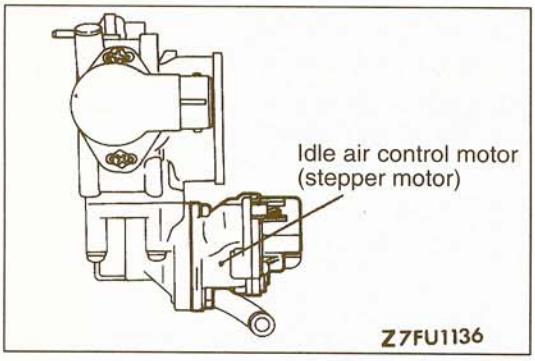


### Checking the operation

(1) Remove the throttle body.
(2) Remove the stepper motor.

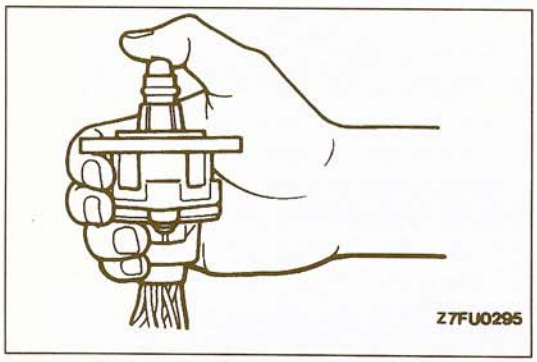


(3) Connect the special tool (test harness) to the idle air control motor connector.
(4) Connect the positive terminal of a power source (approx 6 V) to the white clip or the green clip.
(5) While holding the idle air control motor as shown in the illustration, connect the negative power source terminal to each clip in the sequence described below, and check whether or not there is vibration (a feeling of very slight shaking of the stepper motor) as a result of activation of the stepper motor.
   1) Connect the negative power source terminal to the red and black clips.
   2) Connect the negative power source terminal to the blue and black clips.
   3) Connect the negative power source terminal to the blue and yellow clips.
   4) Connect the negative power source terminal to the red and yellow clips.
   5) Connect the negative power source terminal to th red and black clips.
   6) Repeat the test in the reverse (5–1) sequence.
(6) If vibration is felt as a result of this test,, the stepper motor can be considered to be normal.

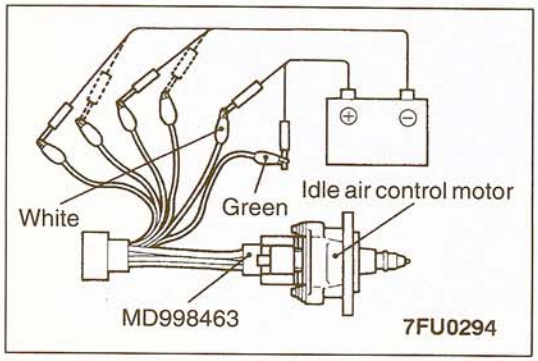


**TSB Revision**

## IGNITION COIL AND IGNITION POWER TRANSISTOR <SOHC-12 valve engine>

13110370043

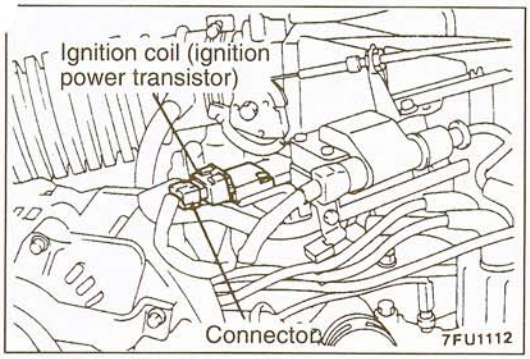


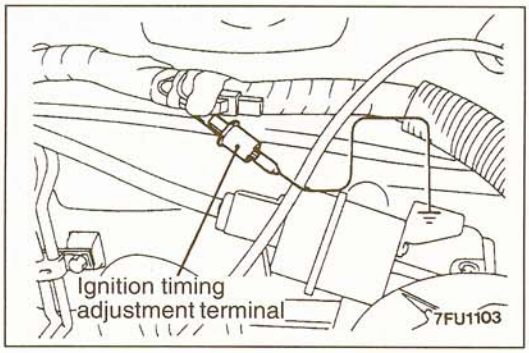


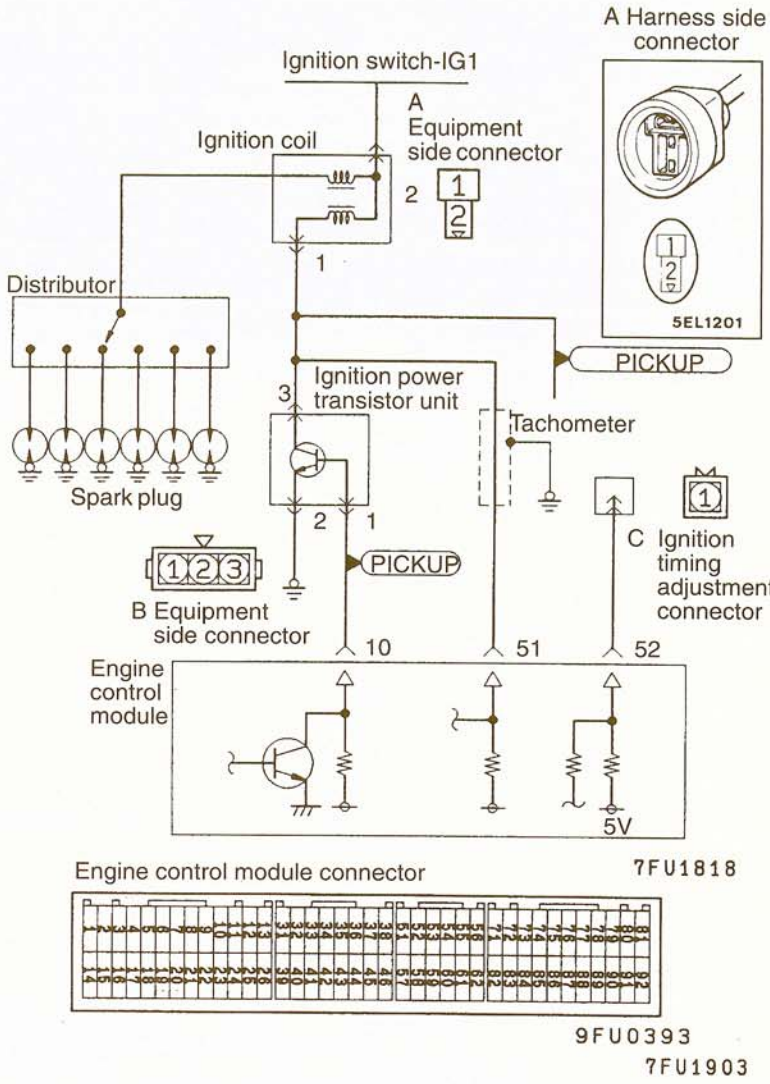


### OPERATION

- When the ignition power transistor unit is switched on by the signals from the engine control module, the primary current of the ignition coil will flow. When the ignition power transistor unit is switched off, the primary current flow is interrupted, and high voltage is produced at the secondary coil.
- When the engine control module switches off the transistor within the unit, the battery positive voltage within the unit is applied to the ignition power transistor unit, and the ignition power transistor unit is switched on. In addition, the ignition power transistor unit is switched off when the engine control module switches on the transistor within the unit.

### INSPECTION

#### Using Scan Tool <Spark advance value>

| Function | Item No. | Data display | Check conditions | Engine state | Standard value |
|---|---|---|---|---|---|
| Data reading | 44 | Spark advance | • Engine: Warmed up<br>• Timing light: set<br>(The timing light is set so as to check the actual ignition timing.) | Idling | 7 – 23°BTDC |
| | | | | 2,500 r/min | 25 – 45°BTDC |

TSB Revision

**<Ignition timing adjustment mode>**

| Function | Item No. | Data display | Inspection condition | Engine condition | Normal display |
|---|---|---|---|---|---|
| Data list | 36 | Continuity at the ground connection of the ignition timing adjustment terminal | Engine: Idling | Ground the ignition timing adjustment terminal. | ON |
| | | | | Disconnect the ground from the ignition timing adjustment terminal. | OFF |

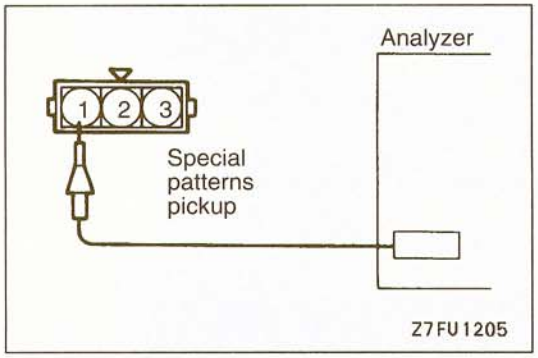


**Wave Pattern Inspection Using an Analyzer**

- Ignition coil primary signal (Refer to GROUP 16 – Ignition System.)
- Ignition power transistor control signal

**Measurement method**

(1) Disconnect the ignition power transistor connector, and connect the special tool (test harness: MB991348) in between. (All terminals should be connected.)
(2) Connect the analyzer special patterns pickup to the ignition power transistor connector terminal (1).

**Alternative method (when test harness is not available)**

Connect the analyzer special patterns pickup to ECM terminal (10) for the ignition power transistor.

**Standard wave pattern**

Observation conditions

| Function | Special patterns |
|---|---|
| Pattern height | Low |
| Pattern selector | Display |
| Engine r/min | Approx. 1,200 r/min |

Standard wave pattern

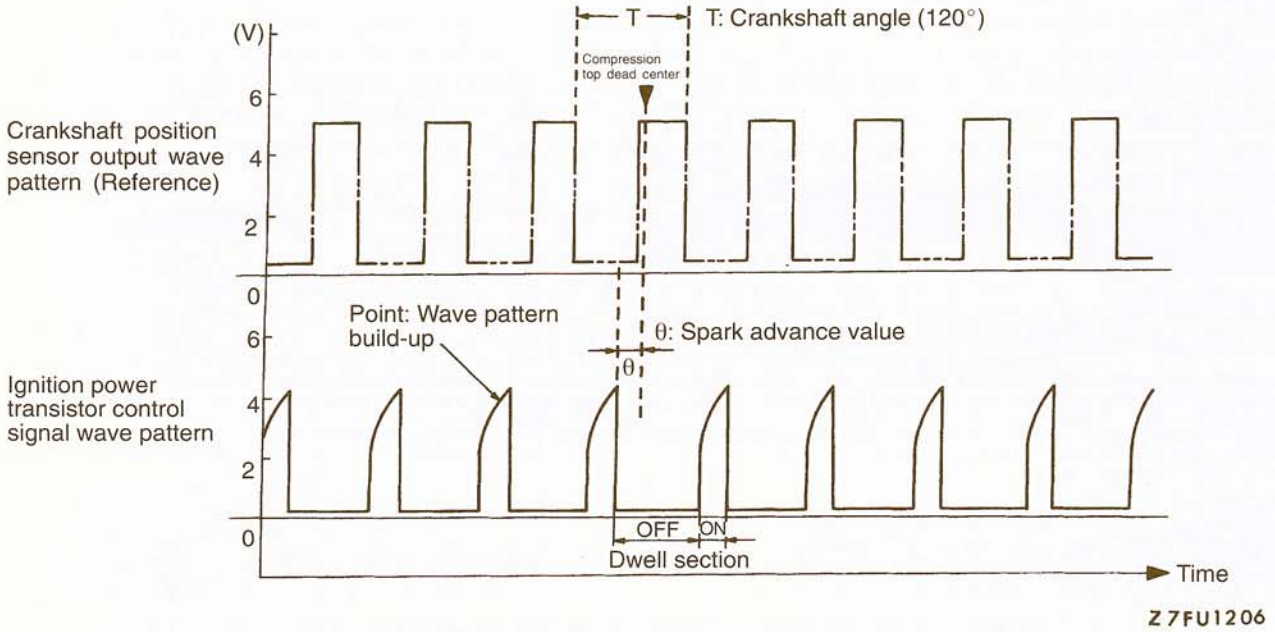


**TSB Revision**

### Wave pattern observation points

Point: Condition of wave pattern build-up and maximum voltage (Refer to abnormal wave pattern examples 1 and 2.)

| Condition of wave pattern build-up section and maximum voltage | Probable cause |
|---|---|
| Rises from approx. 2 V to approx. 4.5 V at the top right | Normal |
| Rectangular wave of approx. 2 V | Open circuit in ignition primary circuit |
| Rectangular wave at power voltage | Malfunction of ignition power transistor |

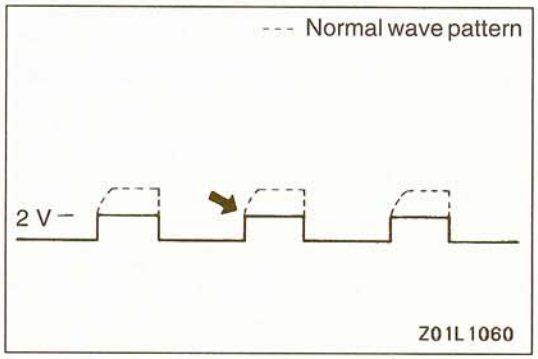


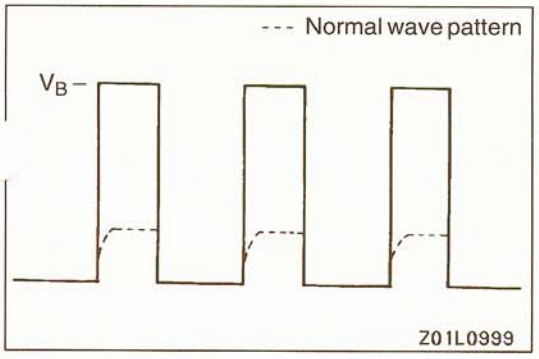


### Examples of abnormal wave patterns

- Example 1
  Wave pattern during engine cranking

  **Cause of problem**

  Open circuit in ignition primary circuit

  **Wave pattern characteristics**

  Top-right part of the build-up section cannot be seen, and voltage value is approximately 2 V too low.

- Example 2
  Wave pattern during engine cranking

  **Cause of problem**

  Malfunction of ignition power transistor

  **Wave pattern characteristics**

  Power voltage results when the ignition power transistor is on.

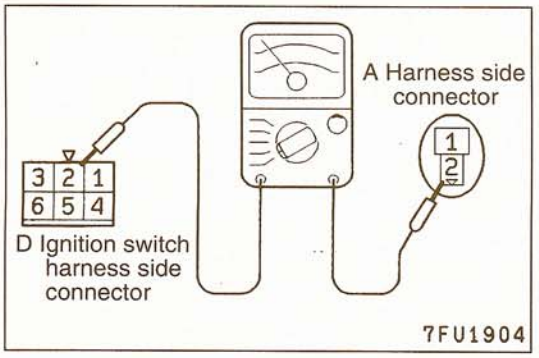


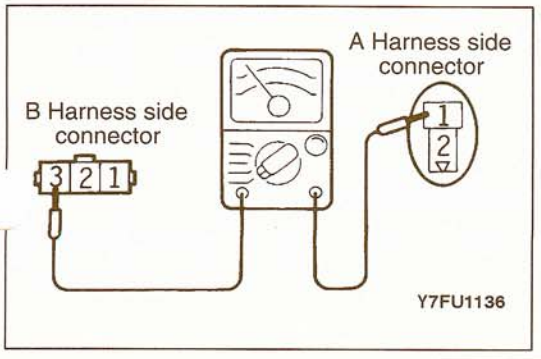


### HARNESS INSPECTION

**STEP 1. Check for continuity between the ignition coil and the ignition switch-IG.**

- Ignition switch connector: Disconnected
- Ignition coil connector: Disconnected

NOTE
- Touch the ohmmeter problems to both ends of the harness.

**OK: GO TO STEP 2**

**NG: Repair the harness. (A2 – D2)**

**STEP 2. Check for an open circuit or a short-circuit to ground between the ignition power transistor and ignition coil.**

- Ignition coil connector: Disconnected
- Ignition power transistor connector: Disconnected

**OK: GO TO STEP 3**

**NG: Repair the harness. (A1 – B3)**

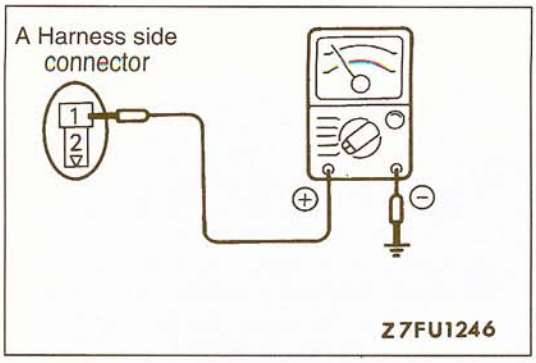


**STEP 3. Check for a short-circuit between the ignition power transistor and the ignition coil.**

- Ignition coil connector: Disconnected
- Ignition power transistor connector: Disconnected

**OK: GO TO STEP 4**

**NG: Check for a short-circuit in the ignition coil primary circuit.**

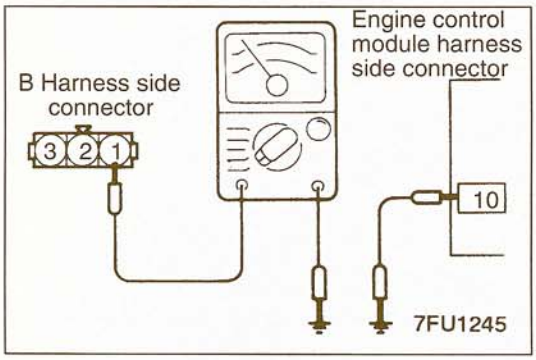


**STEP 4. Check for an open or short-circuit between the ignition power transistor and the engine control module.**

- Ignition power transistor connector: Disconnected
- Engine control module connector: Disconnected

**OK: GO TO STEP 5**

**NG: Repair the harness. (B1 – 10)**

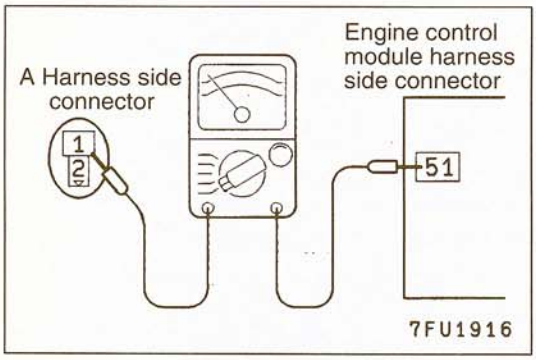


**STEP 5. Check for an open or short-circuit between the ignition coil and the engine control module.**

- Ignition coil connector: Disconnected
- Engine control module connector: Disconnected

**OK: GO TO STEP 6**

**NG: Repair the harness. (A1 – 51)**

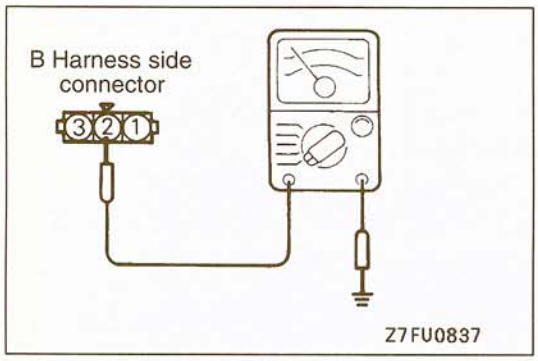


**STEP 6. Check for continuity in the ignition power transistor ground circuit.**

- Ignition power transistor connector: Disconnected

**OK: GO TO STEP 7**

**NG: Repair the harness. (B2 – Ground)**

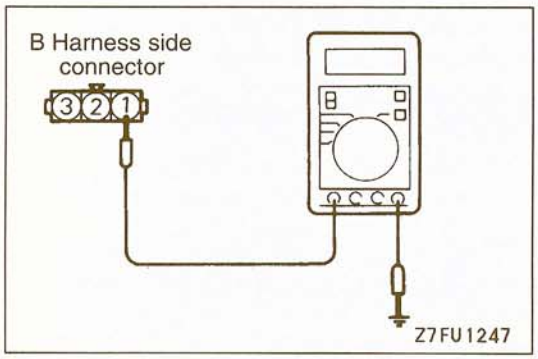


**STEP 7. Measure the voltage of the ignition power transistor control signal.**

- Ignition power transistor connector: Disconnected
- Ignition switch: START

**Voltage (V): 2.0 – 6.0**

**OK: GO TO STEP 8**

**NG: Repair the harness. (B1 – 54)**

**TSB Revision**

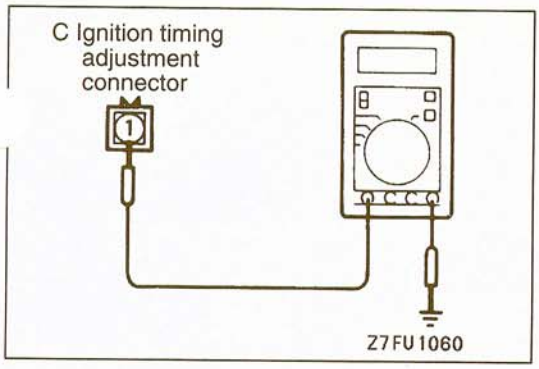


**STEP 8. Measure the voltage at the ignition timing adjustment terminal.**

- Ignition switch: ON

**Voltage (V): 4.0 – 5.2**

**OK: STOP**

**NG: Repair the harness. (C1 – 12)**

## ACTUATOR INSPECTION

Refer to GROUP 16 – Ignition System.

## IGNITION COIL AND IGNITION POWER TRANSISTOR <SOHC-24 valve engine>

13110370050

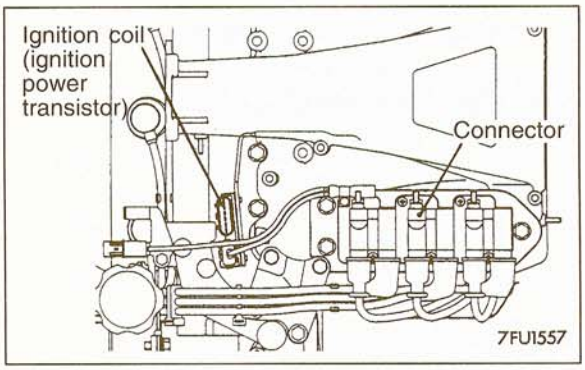


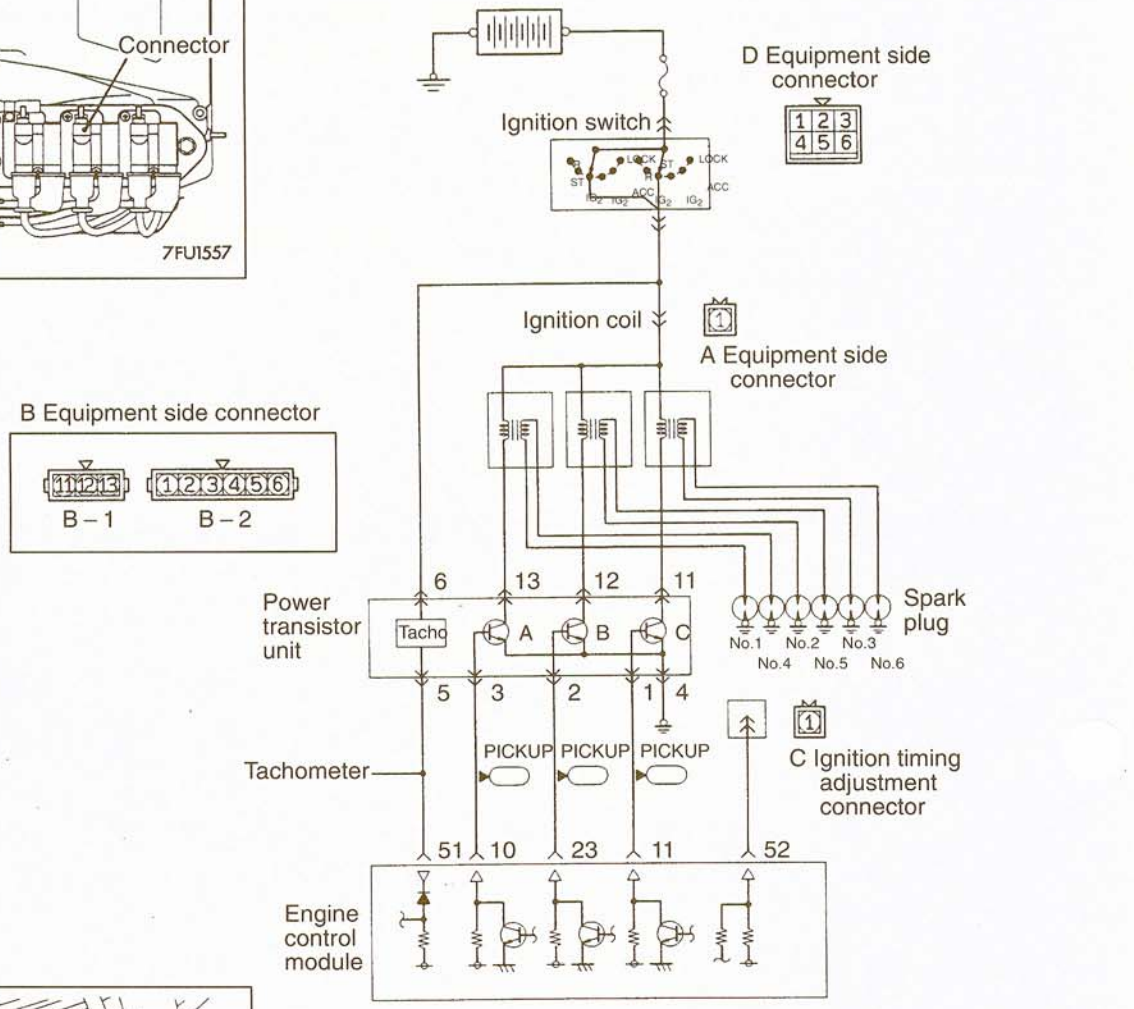


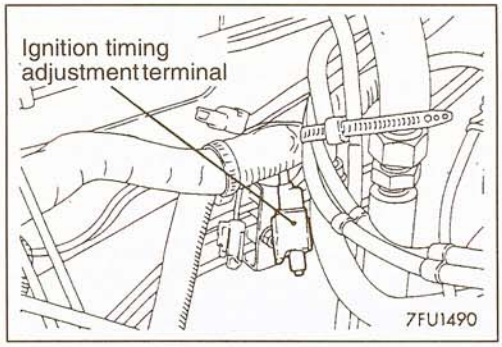


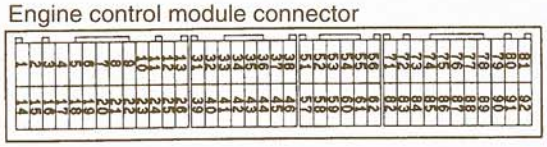


### OPERATION

- When the ignition power transistor unit A is turned on by the signal from the engine control module, primary current flows to the ignition coil A. When the ignition power transistor unit A is turned off, the primary current is shut off and a high voltage is induced in the secondary coil A, causing the ignition plugs of No. 1 and No. 4 cylinders to spark. When the ignition power transistor unit B is turned off, the ignition plugs of No. 2 and No. 5 cylinder spark. In addition, when the ignition power transistor unit C is turned off, the ignition plugs of No. 3 and No. 6 cylinders spark.
- When the engine control module turns off the transistor in the unit, the battery positive voltage in the unit is applied to the ignition powe. transistor unit to turn it on. When the engine control module turns on the transistor in the unit, the ignition power transistor unit is turned off.

**TSB Revision**

## INSPECTION

### Using Scan Tool

#### <Spark Advance>

| Function | Item No. | Data display | Check condition | Engine state | Standard value |
|---|---|---|---|---|---|
| Data reading | 44 | Ignition advance | • Engine: Warmed up<br>• Timing light: Set (set timing light to check actual ignition timing) | Idling | 7–23°BTDC |
| | | | | 2,500 r/min | 27–47°BTDC |

#### <Ignition Timing Adjustment Mode>

| Function | Item No. | Data display | Check condition | Terminal condition | Normal display |
|---|---|---|---|---|---|
| Data reading | 36 | Continuity between the ignition timing adjustment terminal and the ground | • Engine: Idling | Ignition timing adjustment terminal is grounded. | ON |
| | | | | Ignition timing adjustment terminal is disconnected from ground | OFF |

#### <Standard Ignition Timing>

| Function | Item No. | Drive | Check condition | Normal condition |
|---|---|---|---|---|
| Actuator test | 17 | Set to ignition timing adjustment mode. | • Engine: Idling<br>• Timing light: Set | Actual ignition timing: 5°BTDC±3° |

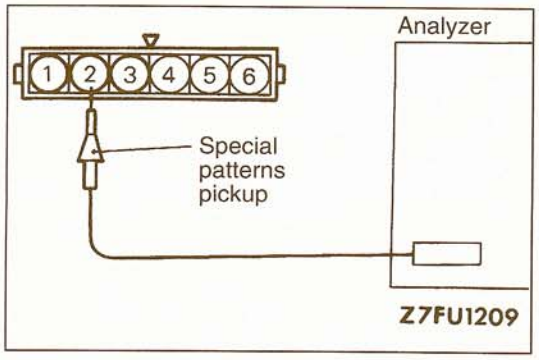


### Wave Pattern Inspection Using an Analyzer

- Ignition coil primary signal
  Refer to GROUP 16 – Ignition System.
- Ignition power transistor control signal

### Measurement method

(1) Disconnect the connector of the power transistor, and connect the special tool (test harness: MB991348) across the disconnected connector parts.
(2) Sequentially connect the special patterns pickup of the analyzer to each of terminal (1) (No.3 – No.6), terminal (2) (No.2 – No.5) and terminal (3) (No.1 – No.4) of the ignition power transistor unit connector.

### Alternative method (when test harness is not available)

Connect the analyzer special patterns pickup to ECM terminals (10), (11) and (23) for the ignition power transistor.

**TSB Revision**

**Standard wave pattern**

Observation conditions

| | |
|---|---|
| Function | Special patterns |
| Pattern height | Low |
| Pattern selector | Display |
| Engine r/min | Approx. 1,200 r/min |

Standard wave pattern

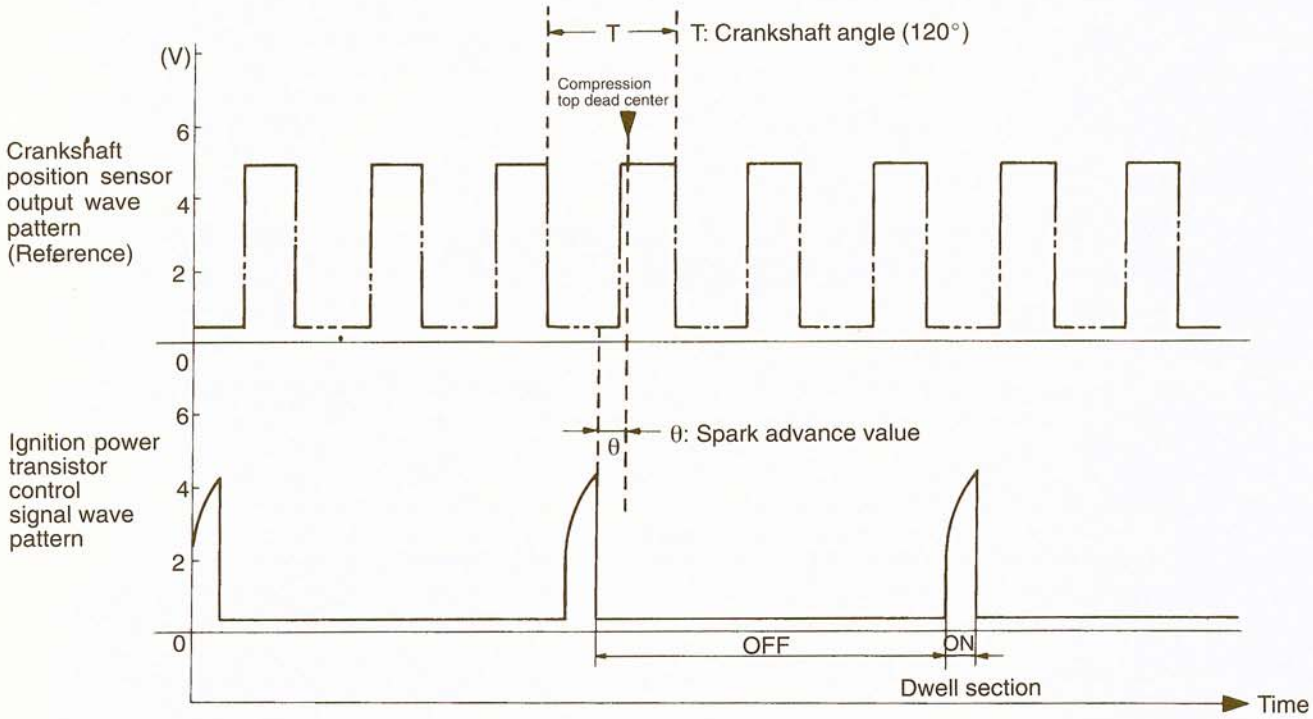


7FU1210

**Wave pattern observation points**

Refer to P.13A-137.

**Examples of abnormal wave patterns**

Refer to P.13A-137.

**TSB Revision**

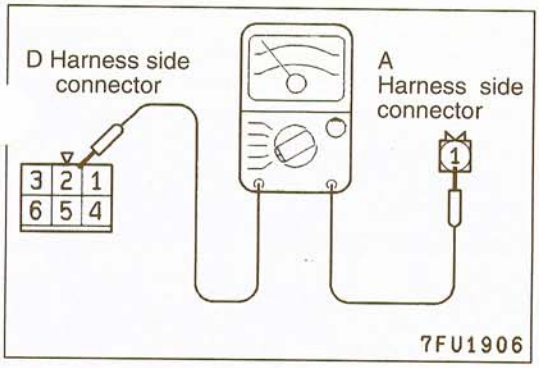


## HARNESS INSPECTION

**STEP 1. Check for continuity between the ignition coil and the ignition switch-IG.**

- Ignition switch connector: Disconnected
- Ignition coil connector: Disconnected

NOTE

- Touch the ohmmeter problems to both ends of the harness.

**OK: GO TO STEP 2**

**NG: Repair the harnesses. (A1 – D2)**

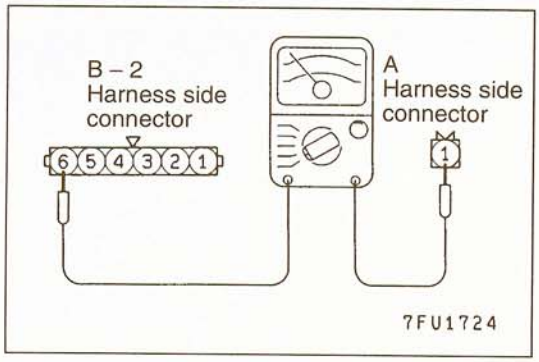


**STEP 2. Check for continuity between the ignition power transistor unit and the ignition coil.**

- Ignition coil connector: Disconnected
- Ignition power transistor connector: Disconnected

**OK: GO TO STEP 3**

**NG: Repair the harnesses. (A1 – B6)**

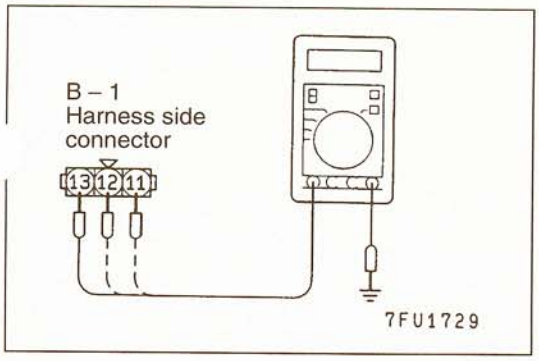


**STEP 3. Measure the power supply voltage of the ignition coil.**

- Ignition power transistor: Disconnected
- Ignition switch: ON

**Voltage (V): Battery positive voltage**

**OK: GO TO STEP 4**

**NG: Repair the harnesses. (B11, B12, B13 – Ignition coil)**

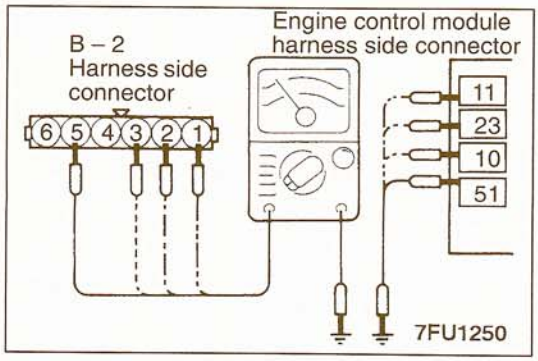


**STEP 4. Check for an open circuit or a short-circuit to ground between the ignition power transistor and the engine control module.**

- Ignition power transistor connector: Disconnected
- Engine control module connector: Disconnected

**OK: GO TO STEP 5**

**NG: Repair the harnesses. (B1 – 11, B2 – 23, B3 – 10, B5 – 51)**

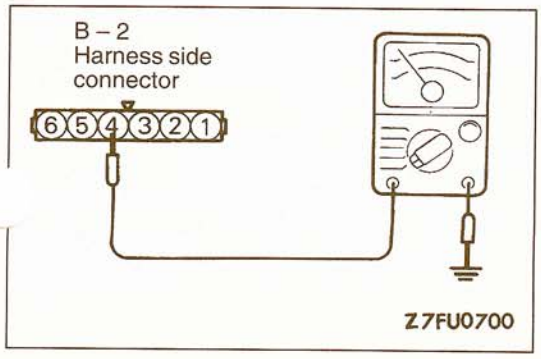


**STEP 5. Check for continuity in the ground circuit of the ignition power transistor.**

- Ignition power transistor connector: Disconnected

**OK: GO TO STEP 6**

**NG: Repair the harnesses. (B4 – Ground)**

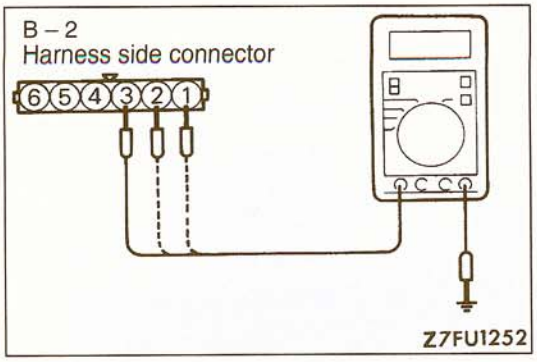


**STEP 6. Measure the ignition power transistor control signal voltage.**

- Ignition power transistor connector: Disconnected
- Ignition switch: START

**Voltage (V): 0.5 – 4.0**

**OK: GO TO STEP 7**

**NG: Repair the harnesses. (B1 – 11, B2 – 23, B3 – 10)**

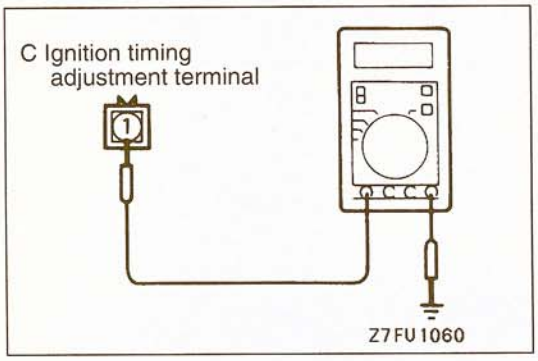


**STEP 7. Measure the terminal voltage of the ignition timing adjustment terminal.**

- Ignition switch: ON

**Voltage (V): 4.0 – 5.2**

**OK: STOP**

**NG: Repair the harnesses. (C1 – 52)**

**ACTUATOR INSPECTION**

Refer to GROUP 16 – Ignition System.

## IGNITION COIL AND IGNITION POWER TRANSISTOR <DOHC>

13110370067

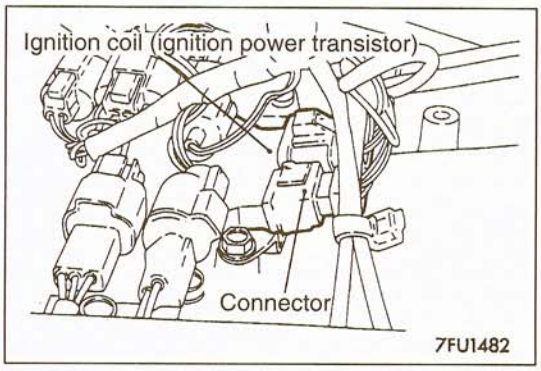


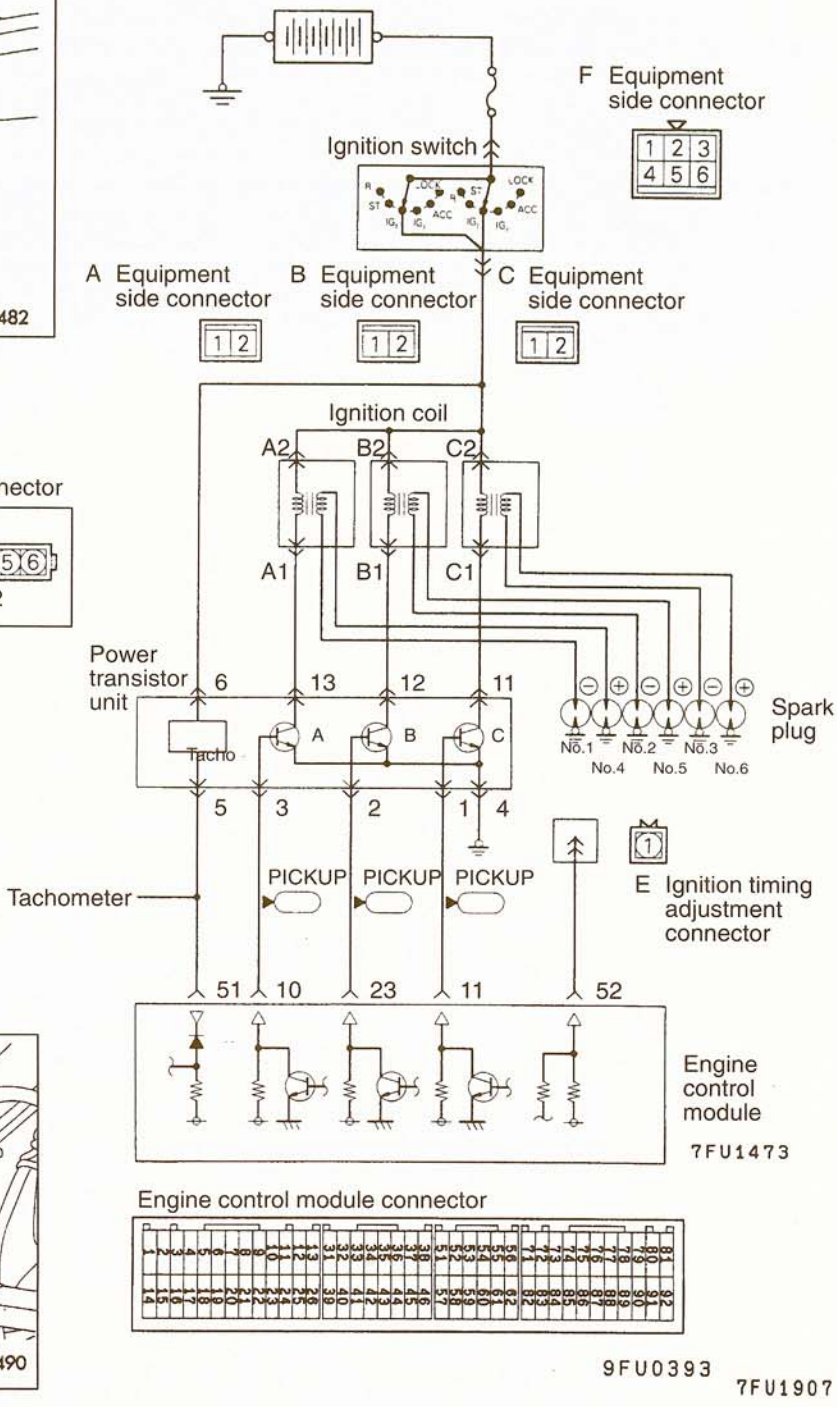


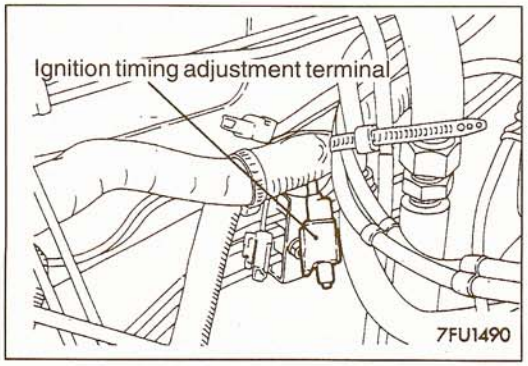


### OPERATION

Refer to P.13A-140.

## INSPECTION

### Using Scan Tool

**<Spark Advance>**

| Function | Item No. | Data display | Check condition | Engine state | Standard value |
|---|---|---|---|---|---|
| Data reading | 44 | Ignition advance | • Engine: Warmed up<br>• Timing light: Set (set timing light to check actual ignition timing) | Idling | 2–18°BTDC |
| | | | | 2,500 r/min | 19–39°BTDC |

**<Ignition Timing Adjustment Mode>**

| Function | Item No. | Data display | Check condition | Terminal condition | Normal display |
|---|---|---|---|---|---|
| Data reading | 36 | Continuity between the ignition timing adjustment terminal and the ground | • Engine: Idling | Ignition timing adjustment terminal is grounded. | ON |
| | | | | Ignition timing adjustment terminal is disconnected from ground | OFF |

**<Standard Ignition Timing>**

| Function | Item No. | Drive | Check condition | Normal condition |
|---|---|---|---|---|
| Actuator test | 17 | Set to ignition timing adjustment mode. | • Engine: Idling<br>• Timing light: Set | Actual ignition timing: 5°BTDC±3° |

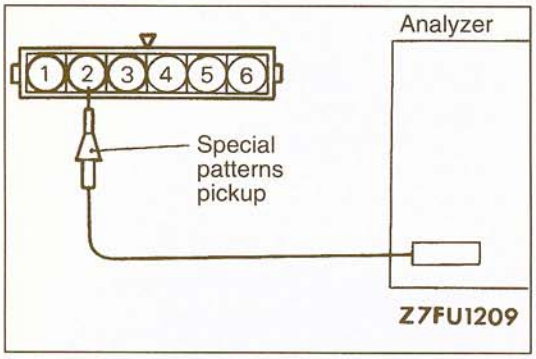


**Wave Pattern Inspection Using an Analyzer**

- Ignition coil primary signal
  (Refer to GROUP 16 – Ignition System.)
- Ignition power transistor control signal

**Measurement method**

(1) Disconnect the connector of the power transistor, and connect the special tool (test harness: MB991348) across the disconnected connector parts.
(2) Sequentially connect the special patterns pickup of the analyzer to each of terminal (1) (No.3 – No.6), terminal (2) (No.2 – No.5) and terminal (3) (No.1 – No.4) of the ignition power transistor unit connector.

**Alternative method (when test harness is not available)**

Connect the analyzer special patterns pickup to ECM terminals (10), (11) and (23) for the ignition power transistor.

**TSB Revision**

**Standard wave pattern**

Refer to P.13A-142.

**Wave pattern observation points**

Refer to P.13A-137.

**Examples of abnormal wave patterns**

Refer to P.13A-137.

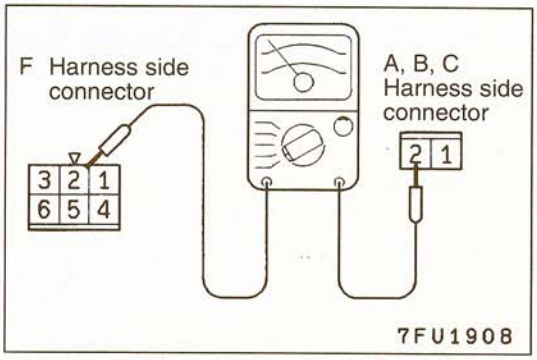


## HARNESS INSPECTION

**STEP 1. Check for continuity between the ignition coil and the ignition switch-IG.**

- Ignition switch connector: Disconnected
- Ignition coil connector: Disconnected

NOTE

- Touch the ohmmeter problems to both ends of the harness.

**OK: GO TO STEP 2**

**NG: Repair the harnesses. (A2 – F2, B2 – F2, C2 – F2)**

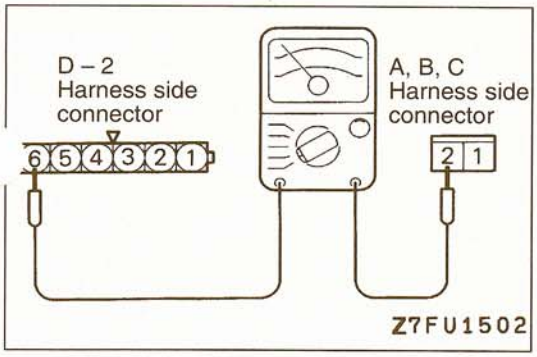


**STEP 2. Check for continuity between the ignition power transistor unit and the ignition coil.**

- Ignition coil connector: Disconnected
- Ignition power transistor connector: Disconnected

**OK: GO TO STEP 3**

**NG: Repair the harnesses. (A2 – D6, B2 – D6, C2 – D6)**

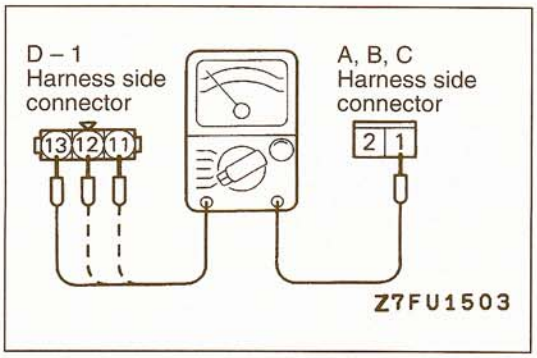


**STEP 3. Check for continuity between the ignition power transistor and the ignition coil.**

- Ignition coil connector: Disconnected
- Ignition power transistor connector: Disconnected

**OK: GO TO STEP 4**

**NG: Repair the harnesses. (A1 – D13, B1 – D12, C1 – D11)**

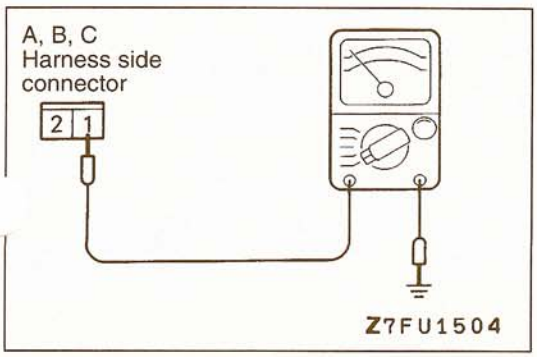


**STEP 4. Check for an short-circuit to ground between the ignition power transistor and the ignition coil.**

- Ignition coil connector: Disconnected
- Ignition power transistor connector: Disconnected

**OK: GO TO STEP 5**

**NG: Check for a short-circuit in the primary circuit of the ignition coil.**

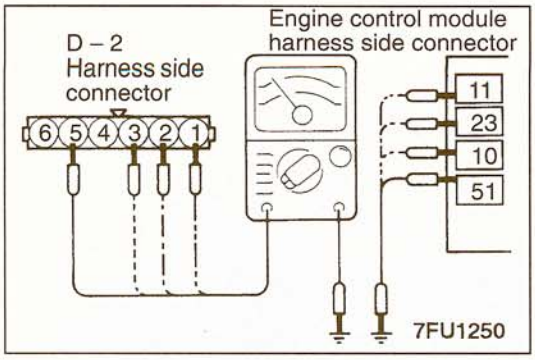


**STEP 5. Check for an open circuit or a short-circuit to ground between the ignition power transistor and the engine control module.**

- Ignition power transistor connector: Disconnected
- Engine control module connector: Disconnected

**OK: GO TO STEP 6**

**NG: Repair the harnesses. (D1 – 11, D2 – 23, D3 – 10, D5 – 51)**

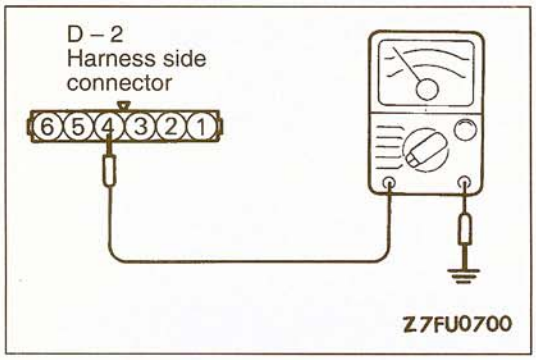


**STEP 6. Check for continuity in the ground circuit of the ignition power transistor.**

- Ignition power transistor connector: Disconnected

**OK: GO TO STEP 7**

**NG: Repair the harnesses. (D4 – Ground)**

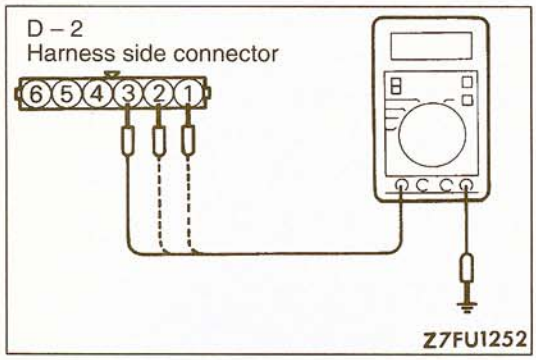


**STEP 7. Measure the ignition power transistor control signal voltage.**

- Ignition power transistor connector: Disconnected
- Ignition switch: START

**Voltage (V): 0.5 – 4.0**

**OK: GO TO STEP 8**

**NG: Repair the harnesses. (D1 – 11, D2 – 23, D3 – 10)**

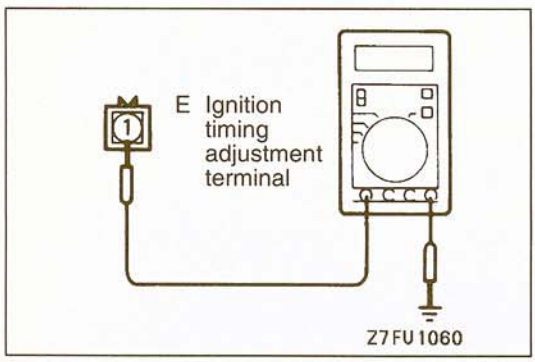


**STEP 8. Measure the terminal voltage of the ignition timing adjustment terminal.**

- Ignition switch: ON

**Voltage (V): 4.0 – 5.2**

**OK: STOP**

**NG: Repair the harnesses. (E1 – 52)**

**ACTUATOR INSPECTION**

Refer to GROUP 16 – Ignition System.

## VARIABLE INDUCTION CONTROL SOLENOID <DOHC>

13110380022

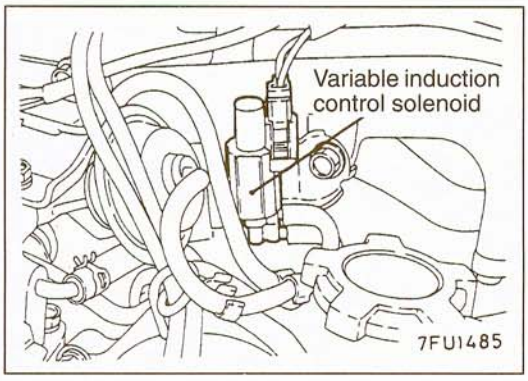


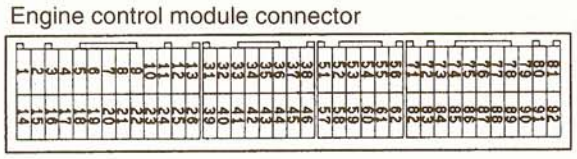


9FU0393

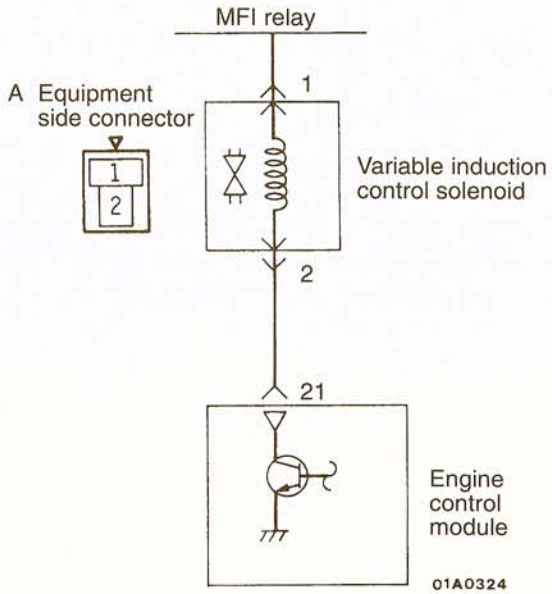


7FU1909

### OPERATION

- The variable induction control solenoid is an ON/OFF type of solenoid which switches the pressure introduced to the variable induction control vacuum actuator between intake manifold pressure and atmospheric pressure.
- Battery positive voltage is supplied to the variable induction control solenoid via the MFI relay. When the engine control module turns the power transistor inside the module on, current flows in the solenoid coil and the negative pressure inside the intake manifold is introduced to the variable induction control vacuum actuator. This causes the variable induction control vacuum actuator to operate and close the control solenoid.

### INSPECTION

#### Using Scan Tool

| Function | Item No. | Drive content | Check conditions | Normal condition |
|---|---|---|---|---|
| Actuator test | 11 | Switches solenoid from off to on | Ignition switch: ON | Operation sound can be heard during activation. |

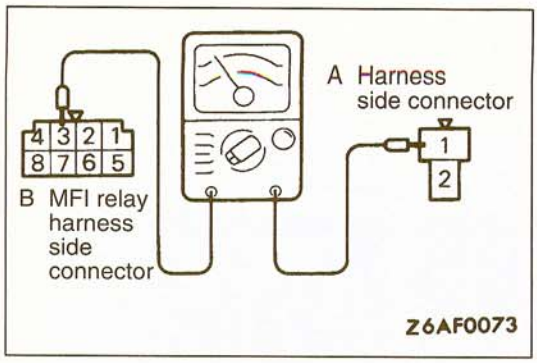


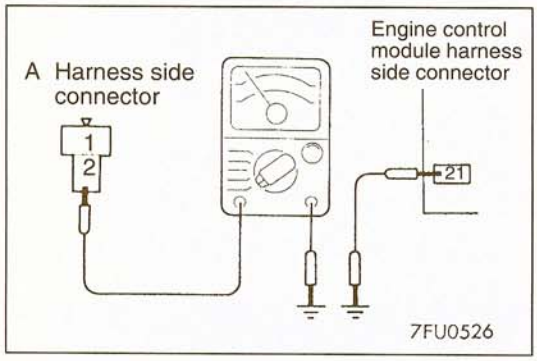


## HARNESS INSPECTION

**STEP 1. Check for continuity between the variable induction control solenoid and the MFI relay.**

- Variable induction control solenoid connector: Disconnected
- MFI relay connector: Disconnected

NOTE
- Insert the circuit tester probes into both ends of the harness.

**OK: GO TO STEP 2**

**NG: Repair the harness. (A1 – B3)**

**STEP 2. Check for an open or short-circuit between the variable induction control solenoid and the engine control module.**

- Variable induction control solenoid connector: Disconnected
- Engine control module connector: Disconnected

**OK: STOP**

**NG: Repair the harness. (A2 – 21)**

## ACTUATOR INSPECTION

Refer to GROUP 15 – On-vehicle Service.

## EVAPORATIVE EMISSION PURGE SOLENOID <SOHC – Federal, DOHC>

13110390056

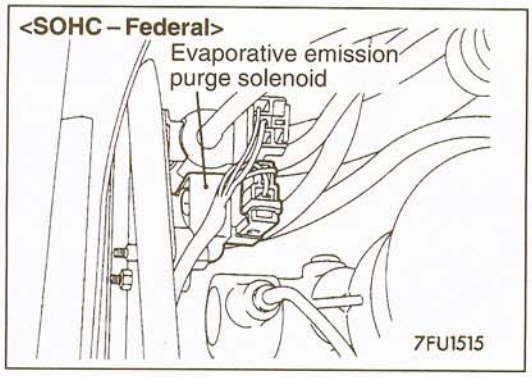


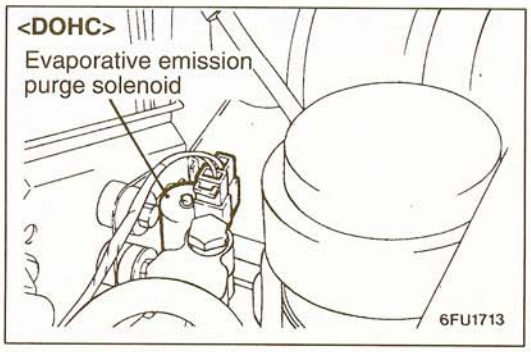


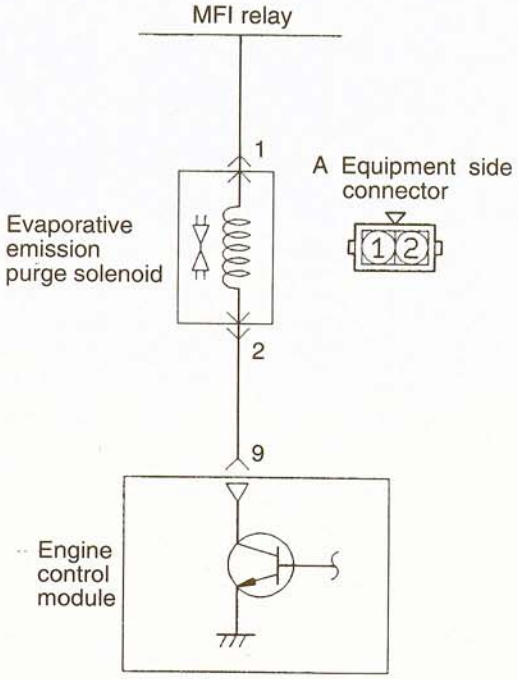


7FU1851

Engine control module connector

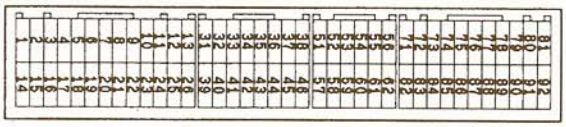

9FU0393

7FU1910

### OPERATION

- The evaporative emission purge solenoid is a duty control type of solenoid; it functions to regulate the introduction of purge air from the evaporative emission canister to the intake manifold plenum.
- Battery positive voltage is supplied, by way of the MFI relay, to the evaporative emission purge solenoid. When the engine control module switches on the ignition power transistor within the unit, current flows to the coil, and purge air is introduced.

### INSPECTION

#### Using Scan Tool

| Function | Item No. | Drive content | Check conditions | Normal condition |
|---|---|---|---|---|
| Actuator test | 08 | Solenoid is switched from off to on. | • Ignition switch: ON | Operation sound can be heard during activation. |

**TSB Revision**

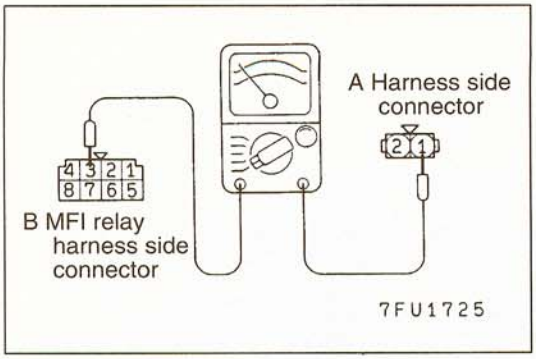


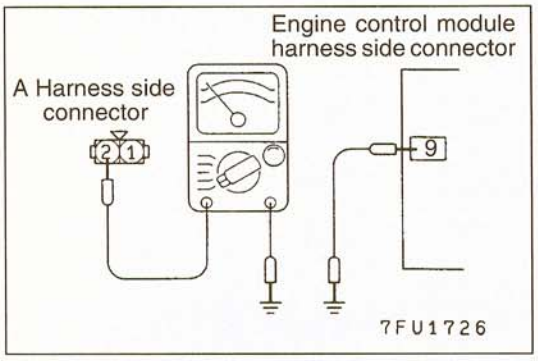


## HARNESS INSPECTION

**STEP 1. Check for continuity between the evaporative emission purge solenoid and the MFI relay.**

- Evaporative emission purge solenoid connecto Disconnected
- MFI relay connector: Disconnected

NOTE
- Touch the ohmmeter probes to both ends of the harness.

**OK: GO TO STEP 2**

**NG: Repair the harness. (A1 – B3)**

**STEP 2. Check for an open circuit or a short-circuit to ground between the evaporative emission purge solenoid and the engine control module.**

- Evaporative emission purge solenoid connector: Disconnected
- Engine control module connector: Disconnected

**OK: STOP**

**NG: Repair the harness. (A2 – 9)**

## ACTUATOR INSPECTION

Refer to GROUP 17 – Evaporative Emission Control System.

## EVAPORATIVE EMISSION PURGE SOLENOID <SOHC – California>

13110390063

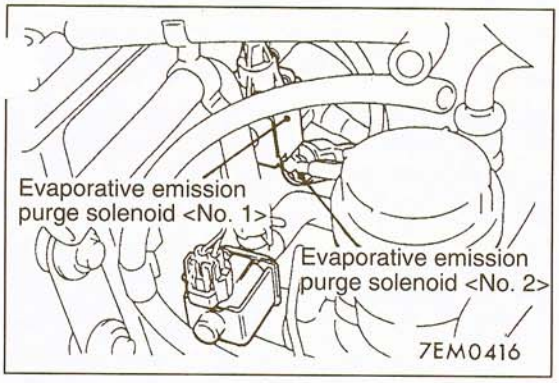


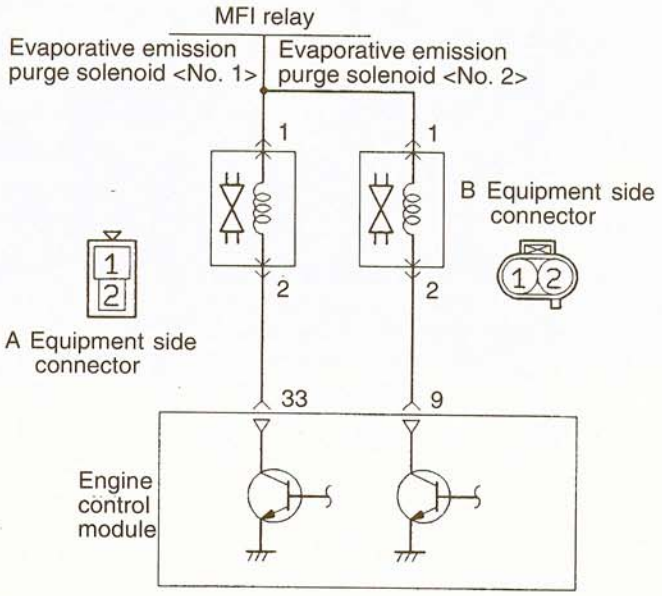


Engine control module connector

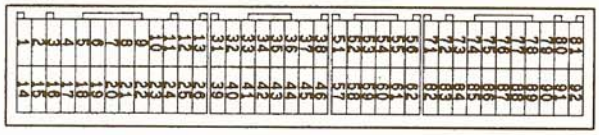

9FU0393

6FU2395

7FU1911

### OPERATION

- The evaporative emission purge solenoid is an duty control type of solenoid; it functions to regulate the introduction of purge air from the evaporative emission canister to the intake manifold plenum.
- Battery positive voltage is supplied, by way of the MFI relay, to the evaporative emission purge solenoid. When the engine control module switches on the ignition power transistor within the unit, current flows to the coil, and purge air is introduced.

### INSPECTION

#### Using Scan Tool

| Function | Item No. | Drive content | Check condition | Normal state |
|---|---|---|---|---|
| Actuator test | 08 | EVAP purge solenoid <No. 1> from OFF to ON | Ignition switch: ON | Operating sound is heard when driven |
| | 28 | EVAP purge solenoid <No. 2> from OFF to ON | | |

**TSB Revision**

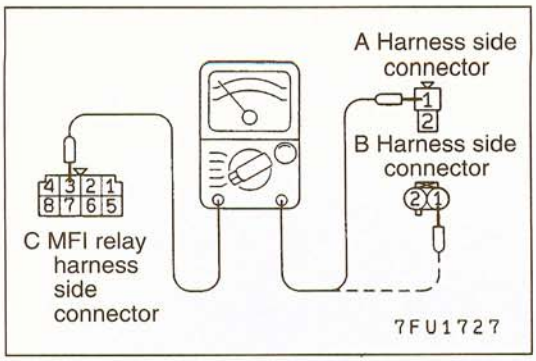


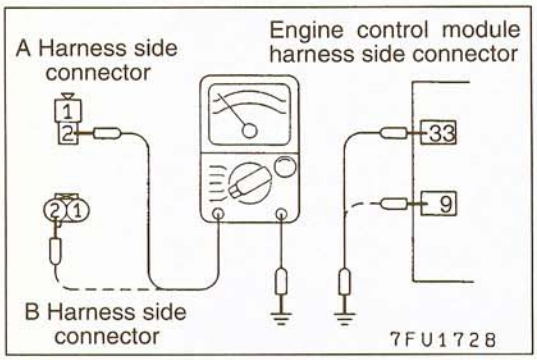


## HARNESS INSPECTION

**STEP 1. Check for continuity between the evaporative emission purge solenoid and the MFI relay.**

- Evaporative emission purge solenoid connector: Disconnected
- MFI relay connector: Disconnected

NOTE
- Touch the ohmmeter probes to both ends of the harness.

**OK: GO TO STEP 2**

**NG: Repair the harness. (A1 – C3, B1 – C3)**

**STEP 2. Check for an open circuit or a short-circuit to ground between the evaporative emission purge solenoid and the engine control module.**

- Evaporative emission purge solenoid connector: Disconnected
- Engine control module connector: Disconnected

**OK: STOP**

**NG: Repair the harness. (A2 – 33, B2 – 9)**

## ACTUATOR INSPECTION

Refer to GROUP 17 – Evaporative Emission Control System; Evaporative Emission Purge Solenoid <No. 1> and Evaporative Emission Purge Solenoid <No. 2>.

## EVAPORATIVE EMISSION PURGE SOLENOID <SOHC – California>

13110450013

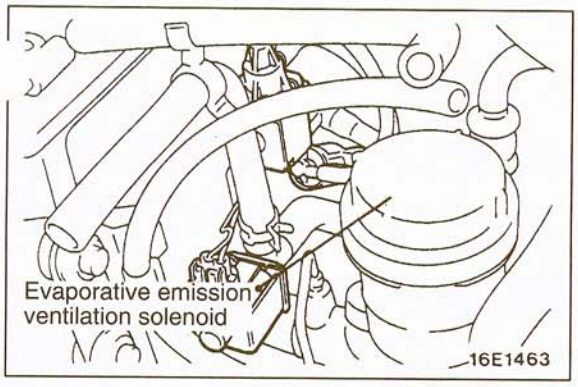


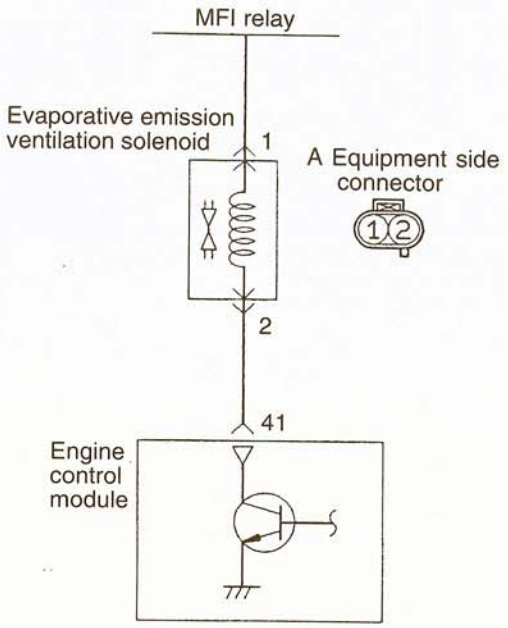


6FU2488

Engine control module connector

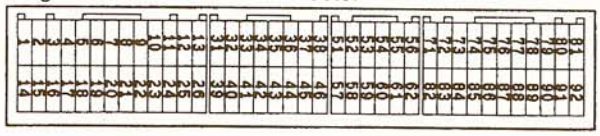

9FU0393

7FU1912

### OPERATION

- The evaporative emission ventilation solenoid is a ON – OFF type solenoid valve and installed to monitor the leak in the fuel tank and purge line. Normally it opens the atmospheric release opening and closes during the leak monitoring.
- Through the MFI relay the battery power is supplied to the evaporative emission ventilation solenoid. If the ECM switches on the power transistor in the module, the current flows in the coil and close the EVAP canister atmospheric release opening.

### INSPECTION

#### Using Scan Tool

| Function | Item No. | Drive content | Check condition | Normal state |
|---|---|---|---|---|
| Actuator test | 29 | Solenoid valve from OFF to ON | Ignition switch: ON | Operating sound is heard when driven |

**TSB Revision**

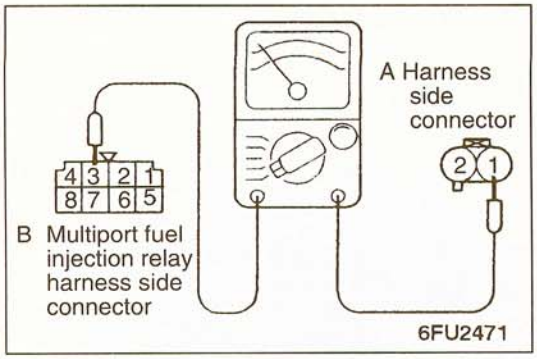


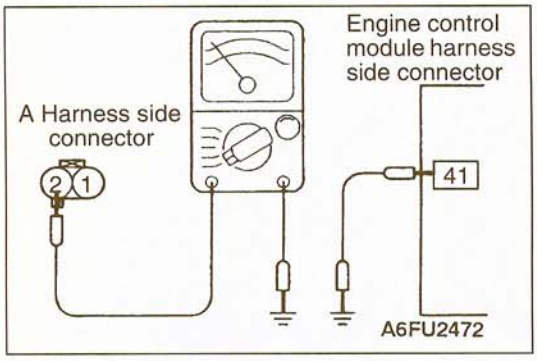


## HARNESS INSPECTION

**STEP 1. Check for continuity between evaporative emission ventilation solenoid and multiport fuel injection relay.**

- Evaporative emission ventilation solenoid connector: Disconnected
- Multiport fuel injection relay connector: Disconnected

NOTE
- Touch the ohmmeter probes to both ends of the harness.

**OK: GO TO STEP 2**

**NG: Repair the harness. (A1 – B3)**

**STEP 2. Check for an open circuit, or a short circuit to ground, between the evaporative emission ventilation solenoid and the engine control module.**

- Evaporative emission ventilation solenoid connector: Disconnected
- Engine control module connector: Disconnected

**OK: STOP**

**NG: Repair the harness. (A2 – 41)**

## ACTUATOR INSPECTION

Refer to GROUP 13F – Fuel Line and Vapor Line.

## EGR SOLENOID <SOHC – Federal, DOHC>

13110400025

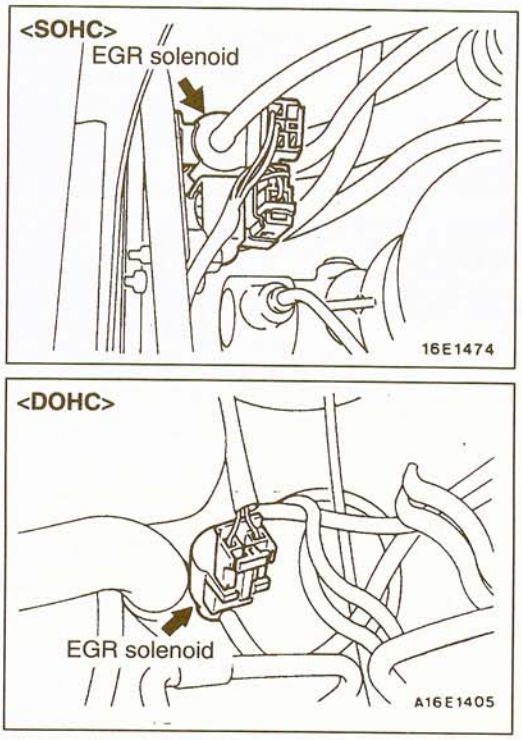


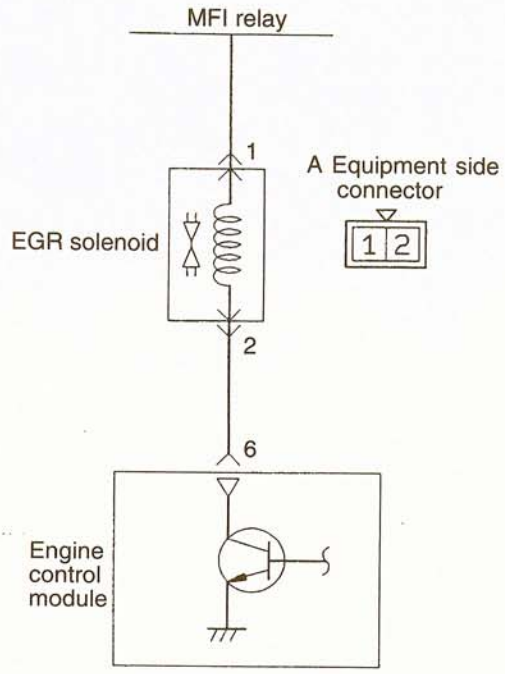


01W657

Engine control module connector

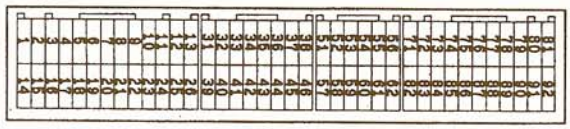

9FU0393

7FU1913

### OPERATION

- THE EGR solenoid is a duty control type solenoid. It makes control by leaking EGR valve operating nagative pressure to the throttle body A port.
- Power supply from the battery is sent through the MFI relay to the EGR solenoid. When the engine control module turns off the power transistor inside the module, current no longer flows through the coil and EGR valve operating negative pressure leaks.

### TROUBLESHOOTING HINT

If the results of EGR solenoid on-vehicle and off vehicle inspections are normal but the diagnostic trouble code for EGR system failure is displayed, check the EGR valve, vacuum hose and EGR passage for blockage.

### INSPECTION

#### Using Scan Tool

| Function | Item No. | Drive content | Check condition | Normal condition |
|---|---|---|---|---|
| Actuator test | 10 | Turn solenoid from off to on | Ignition switch: ON | Operation sound can be heard during activation |

**TSB Revision**

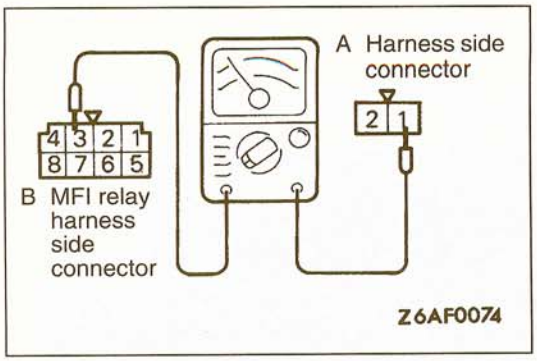


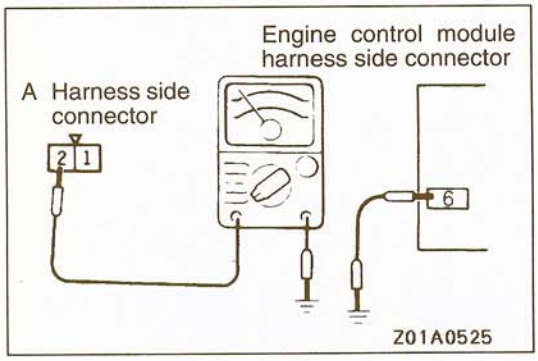


## HARNESS INSPECTION

**STEP 1. Check for continuity between the EGR solenoid and the MFI relay.**

- EGR solenoid connector: Disconnected
- MFI relay connector: Disconnected

NOTE
- Touch the circuit tester probes to both ends of the harness.

**OK: GO TO STEP 2**

**NG: Repair the harness. (A1 – B3)**

**STEP 2. Check for an open circuit or a short-circuit to ground between the EGR solenoid and the engine control module.**

- EGR solenoid connector: Disconnected
- Engine control module connector: Disconnected

**OK: STOP**

**NG: Repair the harness. (A2 – 6)**

## ACTUATOR INSPECTION

Refer to GROUP 17 – Exhaust Gas Recirculation (EGR) System.

## ANTI-LOCK BRAKING SIGNAL

13110410035

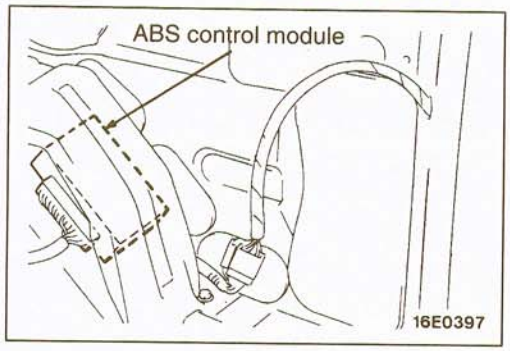


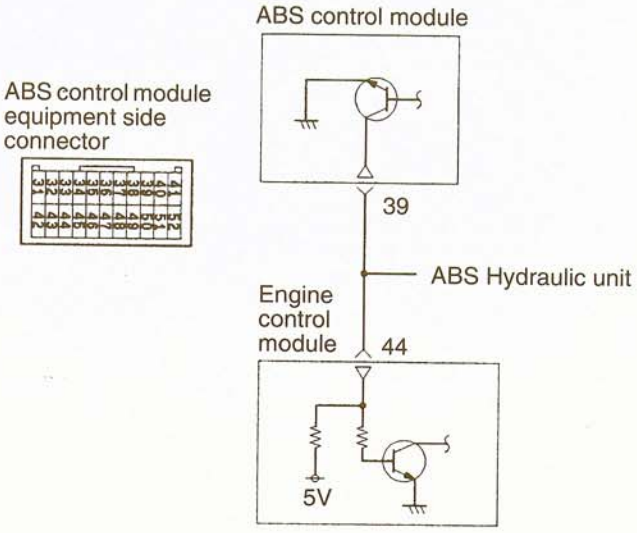


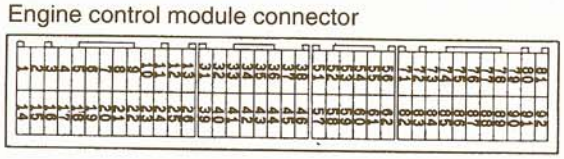


7FU1914

### OPERATION

- The anti-lock braking signal is output by the anti-lock braking system (ABS) control module to the engine control module as a signal to indicate whether the motor relay is being driven or not. The engine control module controls the idle air control motor by means of this signal, and gives accurate anti-lock braking effectiveness.
- The ABS control module turns the ignition power transistor ON when the motor relay is being driven, and the output terminal which has battery positive voltage applied is short-circuited to the ground. This causes the anti-lock braking signal to change from HIGH to LOW.

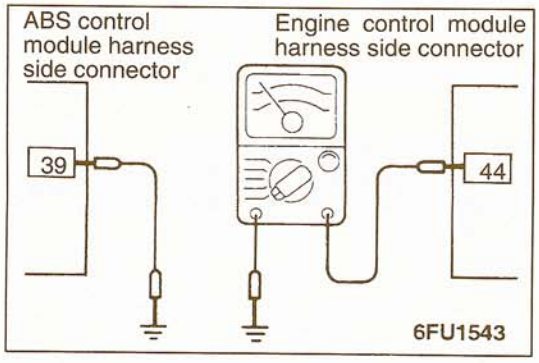


### HARNESS INSPECTION

**STEP 1. Check for an open or short-circuit between the ABS control module and the engine control module.**

- ABS control module connector: Disconnected
- Engine control module connector: Disconnected

**OK: STOP**

**NG: Repair the harness. (39 – 44)**

## FUEL TANK DIFFERENTIAL PRESSURE SENSOR <SOHC – California>

13110460016

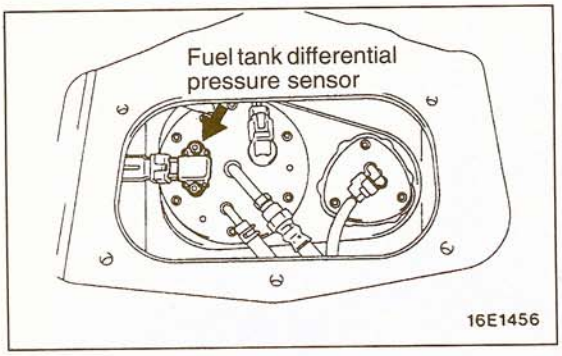


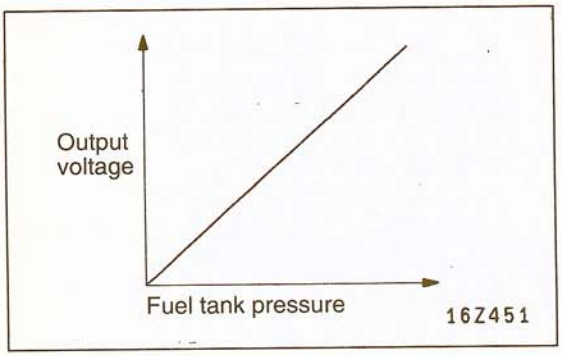


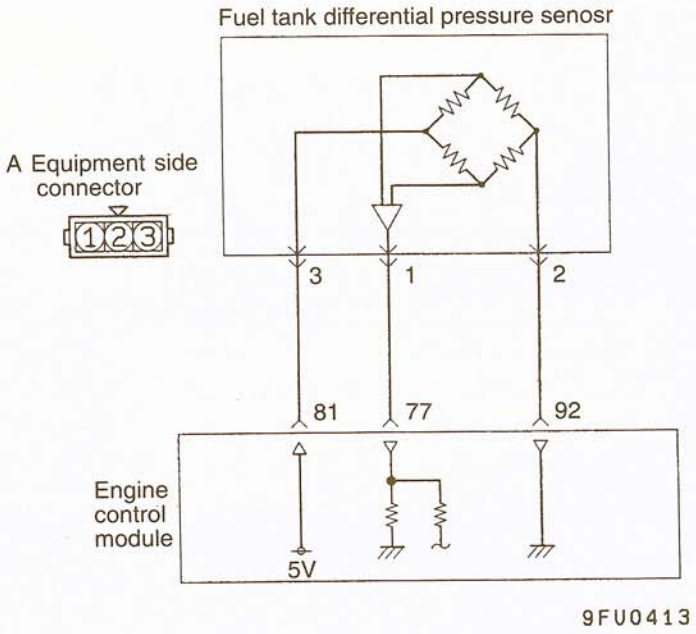


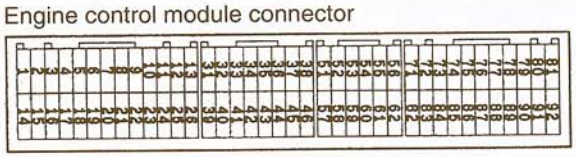


7FU1915

### OPERATION

- Fuel tank differential pressure sensor will convert the pressure in the fuel tank to voltage and input it to the engine control module.
- 5 V of power is supplied to the fuel tank differential pressure sensor from the engine control module, and the sensor circuit ground is located in the engine control module.
- The fuel tank differential pressure sensor output voltage is proportioned to the fuel tank pressure and sent to the engine control module.

### INSPECTION

#### Using Scan Tool

| Function | Item No. | Data display | Check condition | Standard value |
|---|---|---|---|---|
| Data reading | 73 | Fuel tank internal pressure | • Ignition switch: ON<br>• Fuel tank filler tube cap removed | –3.3 – 3.3 kPa |

**TSB Revision**

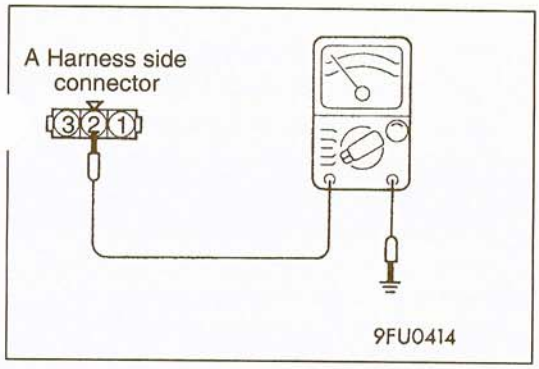


## HARNESS INSPECTION

**STEP 1. Check for continuity of the ground circuit**

- Fuel tank differential pressure sensor connector: Disconnected

**OK: GO TO STEP 2**

**NG: Repair the harness (A2 – 92)**

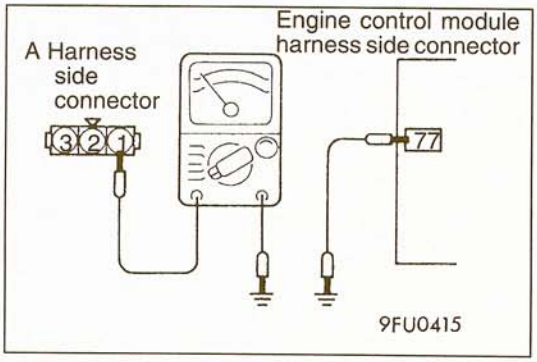


**STEP 2. Check for open-circuit, or short-circuit to ground between the engine control module and the manifold absolute pressure sensor.**

- Fuel tank differential pressure sensor connector: Disconnected
- Engine control module connector: Disconnected

**OK: GO TO STEP 3**

**NG: Repair the harness (A1 – 77)**

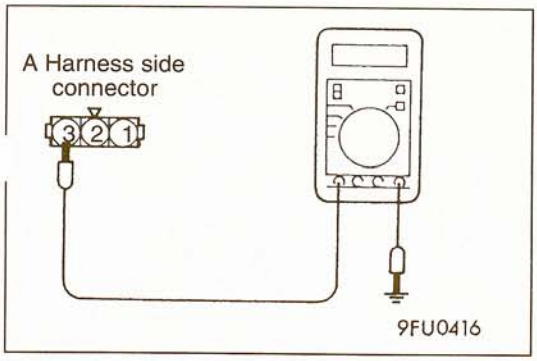


**STEP 3. Measure the sensor impressed voltage to the manifold absolute pressure sensor.**

- Fuel tank differential pressure sensor connector: Disconnected
- Engine control module connector: Connected
- Ignition switch: ON

**Voltage (V): 4.8 – 5.2 V**

**OK: STOP**

**NG: Replace the engine control module.**

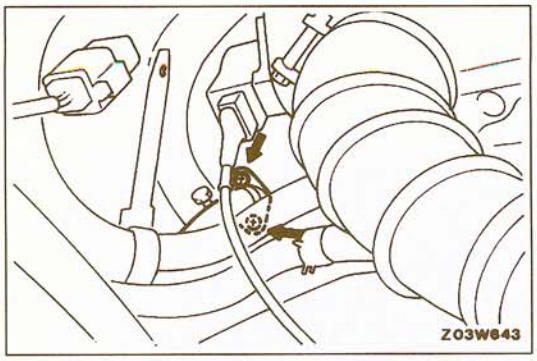


## FUEL PRESSURE TEST <SOHC-12 valve engine>

13110420045

(1) Reduce the internal pressure of the fuel pipes and hoses
(2) Disconnect the high pressure fuel hose at the fuel ra. side.

**Caution**
**Cover the hose connection with a shop towel to prevent splash of fuel that could be caused by some residual pressure in the fuel pipe line.**

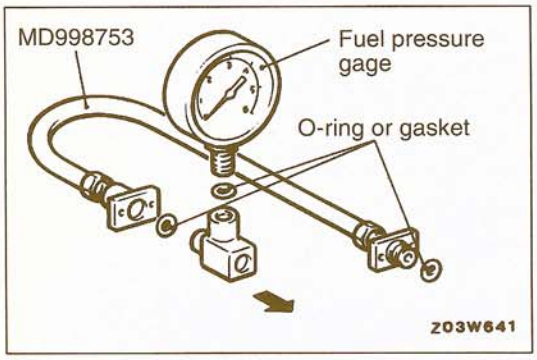


(3) Connect a fuel pressure gage to the special tool, placing an adequate O-ring or gasket between the gage end special tool prevent fuel leaks.

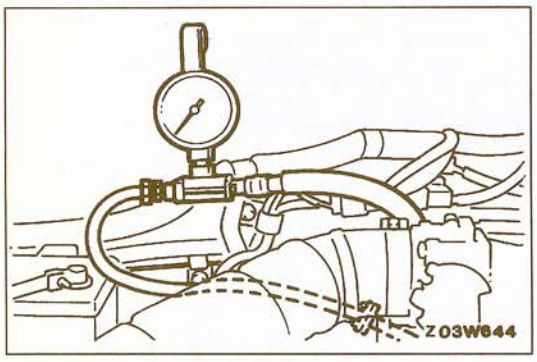


(4) Attach the special tool which was connected in step (3) to the fuel rail.

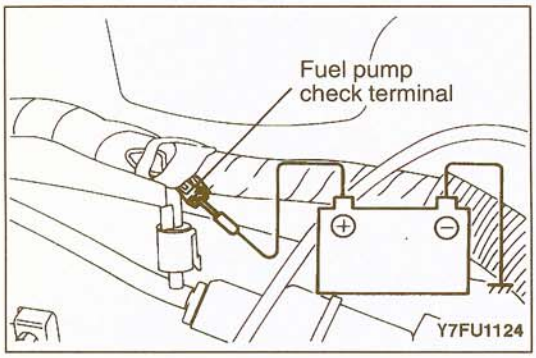


(5) Connect a jumper wire to the terminal for activation of the fuel pump and to the positive battery terminal to activate the fuel pump. With fuel pressure applied, check that there is no fuel leakage from the fuel pressure gage and the special tool connection part.

(6) Disconnect the jumper wire from the terminal for activation of the fuel pump to stop the fuel pump.
(7) Start the engine and let it idle.
(8) Measure the fuel pressure during idling.

**Standard value: Approx. 270 kPa (38 psi) at curb idle**

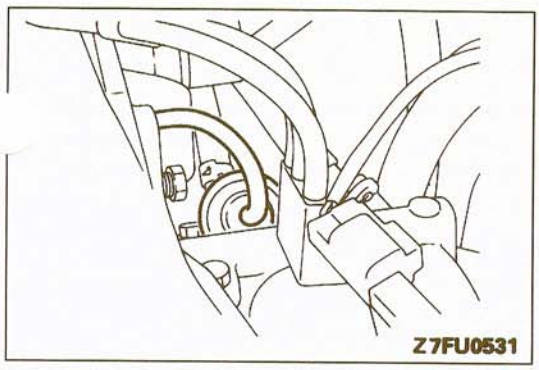


(9) Disconnect the vacuum hose from the fuel pressure regulator, and then measure the fuel pressure while using a finger to plug the end of the hose.

**Standard value:**
**330–370 kPa (47–53 psi) at curb idle speed**

(10) Check that the fuel pressure during idling does not decrease even after the engine is raced a few times.

(11) Use a finger to gently press the fuel return hose while repeatedly racing the engine, and check that there is fuel pressure in the return hose also.

NOTE
There will be no fuel pressure in the return hose if there is insufficient fuel flow.

(12) If the fuel pressure measured in steps (9) to (12) is outside the standard value range, check for the probable cause by referring to the following table, and then make the appropriate repair.

| Condition | Probable cause | Remedy |
|---|---|---|
| • Fuel pressure is too low.<br>• Fuel pressure drops during racing.<br>• No fuel pressure in fuel return hose. | Fuel filter is clogged. | Replace the fuel filter. |
| | Malfunction of valve seat inside the fuel pressure regulator, or fuel leakage to return side caused by spring deterioration. | Replace the fuel pressure regulator. |
| | Low fuel pump discharge pressure. | Replace the fuel pump. |
| Fuel pressure is too high. | The valve inside the fuel pressure regulator is sticking. | Replace the fuel pressure regulator. |
| | Clogging of the fuel return hose and/or the pipe. | Clean or replace the hose and/or pipe. |
| Fuel pressure does not change when vacuum hose is connected and disconnected. | Damaged vacuum hose or clogged nipple. | Replace the vacuum hose, or clean the nipple. |

(13) Stop the engine and check for a change of the value indicated by the fuel pressure gage. The condition is normal if there is no decrease in the indicated value within two minutes. If there is a decrease in the indicated valu monitor the speed of the decrease, and, referring to the following table, determine the cause of the problem and make the appropriate repair.

| Condition | Probable cause | Remedy |
|---|---|---|
| After the engine is stopped, the fuel pressure drops gradually. | Injector leakage. | Replace the injector. |
| | Leakage at the fuel pressure regulator valve seat. | Replace the fuel pressure regulator. |
| There is a sudden sharp drop of the fuel pressure immediately after the engine is stopped. | The check valve (within the fuel pump) is not closed. | Replace the fuel pump. |

(14) Reduce the internal pressure of the fuel pipes and hose. (Refer to GROUP 13F – On-vehicle Service.)

(15) Disconnect the fuel pressure gage and the special tool from the fuel rail.

**Caution**
**Because there will be some residual pressure in the fuel pipe line, use a shop towel to cover so that fuel doesn't splatter.**

(16) Replace the O-ring at the end of the high-pressure fuel hose with a new one.

(17) After connecting the high-pressure fuel hose to the fuel rail, tighten the installation bolt to the specified torque.

**Tightening torque: 5 Nm (3.6 ft.lbs)**

(18) Check that there is no fuel leakage.
1) Apply battery positive voltage to the terminal for activation of the fuel pump so as to activate the fuel pump.
2) With fuel pressure applied, check for leakage of the fuel line.

## FUEL PRESSURE TEST <SOHC-24 valve engine>

13110420052

(1) Reduce the internal pressure of the fuel pipes and hoses.
(2) Remove the fuel pressure regulator at the fuel rail side.

**Caution**
**Cover the fuel pressure regulator with a shop towel to prevent splash of fuel that could be caused by some residual pressure in the fuel pipe line.**

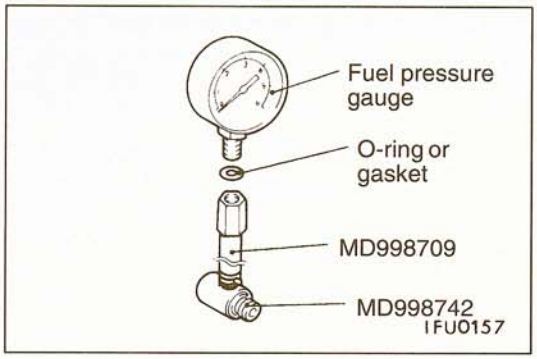


(3) Connect a fuel pressure gage to the special tool, placing an adequate O-ring or gasket between the gage end special tool prevent fuel leaks.
(4) After carrying out step (3), install the special tool between the fuel rail and the fuel pressure regulator.

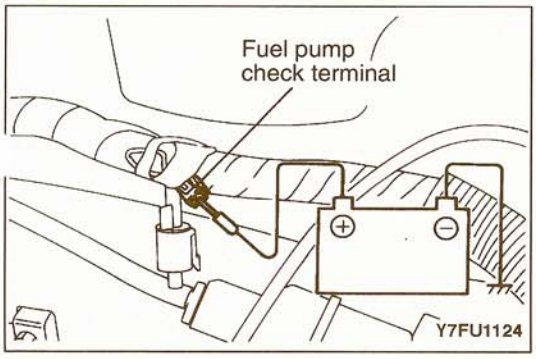


(5) Connect a jumper wire to the terminal for activation of the fuel pump and to the positive battery terminal to activate the fuel pump. With fuel pressure applied, check that there is no fuel leakage from the fuel pressure gage and the special tool connection part.
(6) Disconnect the jumper wire from the terminal for activation of the fuel pump to stop the fuel pump.
(7) Start the engine and let it idle.
(8) Measure the fuel pressure during idling.

**Standard value: Approx. 270 kPa (38 psi) at curb idle**

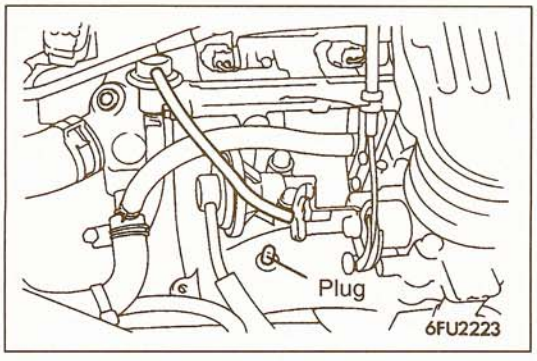


(9) Disconnect the vacuum hose (blue stripe) from the intake manifold and then plug the nipple.
Measure the fuel pressure in this condition.

**Standard value:**
**330–370 kPa (47–53 psi) at curb idle speed**

(10) Check that the fuel pressure during idling does not decrease even after the engine is raced a few times.
(11) Use a finger to gently press the fuel return hose while repeatedly racing the engine, and check that there is fuel pressure in the return hose also.

NOTE
There will be no fuel pressure in the return hose if there is insufficient fuel flow.

(12) If the fuel pressure measured in steps (9) to (12) is outside the standard value range, check for the probable cause by referring to the following table, and then make the appropriate repair.

| Condition | Probable cause | Remedy |
|---|---|---|
| • Fuel pressure is too low.<br>• Fuel pressure drops during racing.<br>• No fuel pressure in fuel return hose. | Fuel filter is clogged. | Replace the fuel filter. |
| | Malfunction of valve seat inside the fuel pressure regulator, or fuel leakage to return side caused by spring deterioration. | Replace the fuel pressure regulator. |
| | Low fuel pump discharge pressure. | Replace the fuel pump. |
| Fuel pressure is too high. | The valve inside the fuel pressure regulator is sticking. | Replace the fuel pressure regulator. |
| | Clogging of the fuel return hose and/or the pipe. | Clean or replace the hose and/or pipe. |
| Fuel pressure does not change when vacuum hose is connected and disconnected. | Damaged vacuum hose or clogged nipple. | Replace the vacuum hose, or clean the nipple. |

(13) Stop the engine and check for a change of the value indicated by the fuel pressure gage. The condition is normal if there is no decrease in the indicated value within two minutes. If there is a decrease in the indicated value, monitor the speed of the decrease, and, referring to the following table, determine the cause of the problem and make the appropriate repair.

| Condition | Probable cause | Remedy |
|---|---|---|
| After the engine is stopped, the fuel pressure drops gradually. | Injector leakage. | Replace the injector. |
| | Leakage at the fuel pressure regulator valve seat. | Replace the fuel pressure regulator. |
| There is a sudden sharp drop of the fuel pressure immediately after the engine is stopped. | The check valve (within the fuel pump) is not closed. | Replace the fuel pump. |

(14) Reduce the internal pressure of the fuel pipes and hose. (Refer to GROUP 13F – On-vehicle Service.)

(15) Disconnect the fuel pressure gage and the special tool from the fuel rail.

**Caution**
**Because there will be some residual pressure in the fuel pipe line, use a shop towel to cover so that fuel doesn't splatter.**

(16) Replace the O-ring at the end of the high-pressure fuel hose with a new one.

(17) After connecting the high-pressure fuel hose to the fuel rail, tighten the installation bolt to the specified torque.

**Tightening torque: 5 Nm (3.6 ft.lbs)**

(18) Check that there is no fuel leakage.
1) Apply battery positive voltage to the terminal fc activation of the fuel pump so as to activate the fue. pump.
2) With fuel pressure applied, check for leakage of the fuel line.

**TSB Revision**

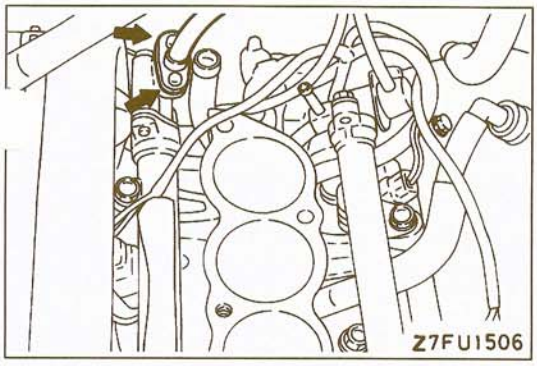


## FUEL PRESSURE TEST <DOHC>

13110420069

(1) Reduce the internal pressure of the fuel pipes and hoses.
(2) Remove the intake manifold plenum.
(3) Disconnect the high pressure fuel hose at the fuel rail side.

**Caution**
**Cover the hose connection with a shop towel to prevent splash of fuel that could be caused by some residual pressure in the fuel pipe line.**

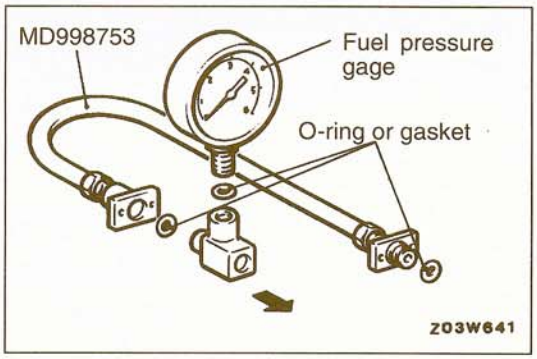


(4) Connect a fuel pressure gage to the special tool, placing an adequate O-ring or gasket between the gage end special tool to prevent fuel leaks.

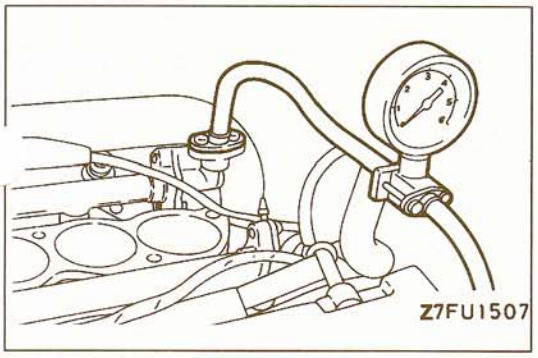


(5) Attach the special tool which was connected in step (4) to the fuel rail.

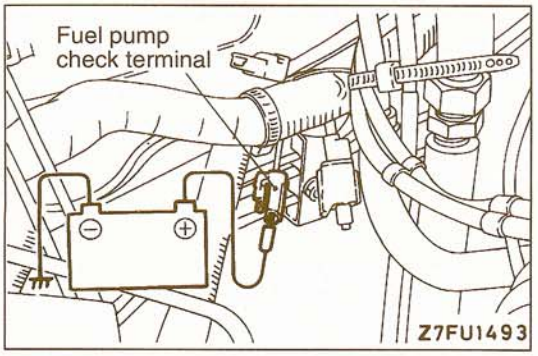


(6) Connect a jumper wire to the terminal for activation of the fuel pump and to the positive battery terminal to activate the fuel pump. With fuel pressure applied, check that there is no fuel leakage from the fuel pressure gage and the special tool connection part.

(7) Measure the fuel pressure.

**Standard value:**
**330–370 kPa (47–53 psi) at curb idle speed**

(8) If the fuel pressure measured in steps (7) is outside the standard value range, check for the probable cause by referring to the following table, and then make the appropriate repair.

| Condition | Probable cause | Remedy |
|---|---|---|
| Fuel pressure is too low. | Fuel filter is clogged. | Replace the fuel filter. |
| | Malfunction of valve seat inside the fuel pressure regulator, or fuel leakage to return side caused by spring deterioration. | Replace the fuel pressure regulator. |
| | Low fuel pump discharge pressure. | Replace the fuel pump. |
| Fuel pressure is too high. | The valve inside the fuel pressure regulator is sticking. | Replace the fuel pressure regulator. |
| | Clogging of the fuel return hose and/or the pipe. | Clean or replace the hose and/or pipe. |

(9) Disconnect the lead wire from the fuel pump activation terminal (black) to stop the fuel pump, and then check for a change of the value indicated by the fuel pressure gage. The condition is normal if there is no decrease in the indicated value within two minutes. If there is a decrease in the indicated value, monitor the speed of the decrease, referring to the following table, determine the cause of the problem and make the appropriate repai

| Condition | Probable cause | Remedy |
|---|---|---|
| After the fuel pump is stopped, the fuel pressure drops gradually. | Injector leakage. | Replace the injector. |
| | Leakage at the fuel pressure regulator valve seat. | Replace the fuel pressure regulator. |
| There is a sudden sharp drop of the fuel pressure immediately after the fuel pump is stopped. | The check valve (within the fuel pump) is not closed. | Replace the fuel pump. |

(10) Connect a vacuum pump to the fuel pressure regulator and apply 80 kPa (24 in.Hg) of negative pressure to remove the residual pressure inside the fuel pipe line.
(11) Disconnect the fuel pressure gage and the special tool from the fuel rail.

**Caution**
**Because there will be some residual pressure in the fuel pipe line, use a shop towel to cover so that fuel doesn't splatter.**

(12) Replace the O-ring at the end of the high-pressure fuel hose with a new one.
(13) After connecting the high-pressure fuel hose to the fuel rail, tighten the installation bolt to the specified torque.

**Tightening torque: 5 Nm (3.6 ft.lbs)**

(14) Check that there is no fuel leakage.
  1) Apply battery positive voltage to the terminal for activation of the fuel pump so as to activate the fuel pump.
  2) With fuel pressure applied, check for leakage of the fuel line.
(15) Install the intake manifold plenum.

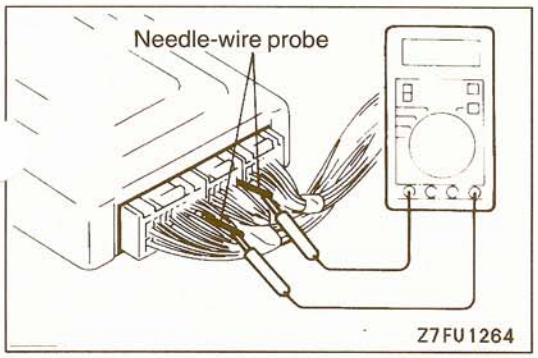


## ENGINE CONTROL MODULE TERMINAL VOLTAGE CHECK

13110430031

(1) Connector a needle wire probe (test harness: MB991223 or paper clip) to a voltmeter probe.
(2) Insert the needle wire probe into each of the engine control module connector terminals from the wire side, and measure the voltage while referring to the check chart.

NOTE
1. Make the voltage measurement with the engine control module connectors connected.
2. Make the voltage measurement between terminal (26) (ground terminal) and each terminal.
3. Pull out the engine control module to make it easier to reach the connector terminals.
4. The checks do not have to be carried out in the order given in the chart.

**Caution**
**Never short-circuit the positive (+) probe between a connector terminal and ground, or the vehicle wiring, the sensor, the engine control module, etc., will be damaged.**

(3) If the voltmeter indication is outside the standard value, check the corresponding sensor, actuator and related electrical wiring and repair or replace as necessary.
(4) After repairing or replacement, recheck with the voltmeter to confirm that the repair has corrected the problem.

## Terminal Voltage Check Chart

Engine Control Module Connector Terminal Arrangement

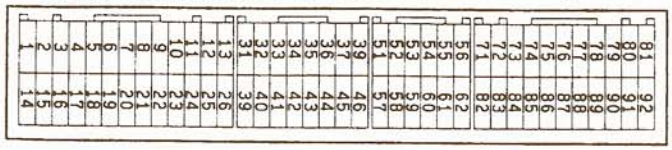

9FU0393

| Terminal No. | Check item | Check condition (Engine condition) | | Standard value | Remarks |
|---|---|---|---|---|---|
| 80 | Backup power supply | Ignition switch: OFF | | B+ | – |
| 12 | Power supply | Ignition switch: ON | | B+ | – |
| 25 | | | | | |
| 82 | Ignition switch-IG | Ignition switch: ON | | B+ | – |
| 38 | MFI relay (power supply) | Ignition switch: OFF | | B+ | – |
| | | Ignition switch: ON | | 0 – 3 V | |
| 8 | MFI relay (fuel pump) | Ignition switch: ON | | B+ | – |
| | | Engine: Idling | | 0 – 3 V | |
| 81 | Sensor applied voltage | Ignition switch: ON | | 4.5–5.5 V | – |
| 90 | Volume air flow sensor | Engine: Idling | | 2.2–3.2 V | – |
| | | Engine: 2,500 r/min | | | |
| 19 | Volume air flow sensor reset signal | Engine: Idling | | 0–1 V | – |
| | | Engine: 3,000 r/min | | 6–9 V | |
| 72 | Intake air temperature sensor | Ignition switch: ON | Air intake temperature of 0°C (32°F) | 3.2–3.8 V | – |
| | | | Air intake temperature of 20°C (68°F) | 2.3–2.9 V | |
| | | | Air intake temperature of 40°C (104°F) | 1.5–2.1 V | |
| | | | Air intake temperature of 80°C (176°F) | 0.4–1.0 V | |
| 85 | Barometric pressure sensor | Ignition switch: ON | Altitude of 0 m (0 ft.) | 3.7–4.3 V | – |
| | | | Altitude of 1,200 m (3,937 ft.) | 3.2–3.8 V | |
| 83 | Engine coolant temperature sensor | Ignition switch: ON | Coolant temperature of 0°C (32°F) | 3.2–3.8 V | – |
| | | | Coolant temperature of 20°C (68°F) | 2.3–2.9 V | |
| | | | Coolant temperature of 40°C (104°F) | 1.3–1.9 V | |
| | | | Coolant temperature of 80°C (176°F) | 0.3–0.9 V | |

| Terminal No. | Check item | Check condition (Engine condition) | | Standard value | Remarks |
|---|---|---|---|---|---|
| 84 | Throttle position sensor | Ignition switch: ON | Idling | 0.3–1.0 V | – |
| | | | Wide open throttle | 4.5–5.5 V | |
| 87 | Closed throttle position switch | Ignition switch: ON | Set the throttle valve to the idle position | 0–1 V | – |
| | | | Slightly open the throttle valve. | 4 V or higher | |
| 88 | Camshaft position sensor | Engine: Cranking | | 0.2–3.0 V | – |
| | | Engine: Idling | | | |
| 89 | Crankshaft position sensor | Engine: Cranking | | 0.2–3.0 V | – |
| | | Engine: Idling | | | |
| 71 | Ignition switch-ST | Engine: Cranking | | 8 V or higher | – |
| 91 | Park/neutral position switch | Ignition switch: ON | Set the selector lever to P or N. | 0–3 V | A/T |
| | | | Set the selector lever to D, 2, L or R. | 8–14 V | |
| 86 | Vehicle speed sensor | • Ignition switch: ON<br>• Move the vehicle slowly forward | | 9 ↔ 5 V (Repeat the variation.) | – |
| 37 | Power steering pressure switch | Engine: Idling after having warmed up | Set the steering wheel to the straight-forward | B+ | – |
| | | | Half turn the steering wheel. | 0–3 V | |
| 45 | Air conditioning switch | Engine: Idling | Turn the air conditioning switch to OFF. | 0 – 3 V | – |
| | | | Turn the air conditioning switch to ON (Air conditioning compressor is operating) | B+ | |
| 22 | Air conditioning compressor clutch relay | • Engine: Idling<br>• Air conditioning switch: OFF → ON (Air compressor is operating) | | Changes from B+ or temporarily 6 V higher to 0–3 V as A/C clutch cycles | – |
| 58 | Electrical load switch | Engine: Idling | Turn the lighting switch off. | 0 – 3 V | DOHC |
| | | | Turn the lighting switch on. | B+ | |
| 76 | Heated oxygen sensor (Front) | Engine: Warmed up, 2,500 r/min (Check using a digital type voltmeter) | | 0 ↔ 0.8 V (Changes repeatedly) | Left-bank side for SOHC – California |
| 75 | Right bank heated oxygen sensor (Front) | Engine: Warmed up, 2,500 r/min (Check using a digital type voltmeter) | | 0 ↔ 0.8 V (Changes repeatedly) | SOHC – California |
| 79 | Heated oxygen sensor (rear) | • Transaxle: 2nd <M/T>, L range <A/T><br>• Driving with the throttle widely open<br>• Engine: 3,500 r/min or more | | 0.6 – 1.0 V | Right-bank side for SOHC – California |

| Terminal No. | Check item | Check condition (Engine condition) | Standard value | Remarks |
|---|---|---|---|---|
| 73 | Right bank heated oxygen sensor (Rear) | • Transaxle: 2nd <M/T>, L range <A/T><br>• Driving with the throttle widely open<br>• Engine: 3,500 r/min or more | 0.6 – 1.0 V | SOHC – California |
| 34 | Heated oxygen sensor heater (Front) | Engine: Warmed up, idle | 0 – 3 V | Left-bank side for SOHC – California |
| | | Engine: 5,000 r/min | B+ | |
| 35 | Right bank heated oxygen sensor heater (Front) | Engine: Warmed up, idle | 0 – 3 V | SOHC – California |
| | | Engine: 5,000 r/min | B+ | |
| 42 | Heated oxygen sensor heater (Rear) | Engine: Warmed up, idle | 0 – 3 V | Left-bank side for SOHC – California |
| | | Engine: 5,000 r/min | B+ | |
| 43 | Right bank heated oxygen sensor heater (Rear) | Engine: Warmed up, idle | 0 – 3 V | SOHC – California |
| | | Engine: 5,000 r/min | B+ | |
| 41 | Evaporative emission ventilation solenoid | Ignition switch: ON | B+ | SOHC – California |
| | | Drive the vehicle at constant speed of 55 mph after warming up the engine (OBD-II with monitor condition) | Temporarily 0 – 3 V | |
| 77 | Fuel tank differential pressure sensor | Engine: Idle | 1.2 – 3.8 V | SOHC – California |
| 1 | No. 1 Injector | Engine: While engine is idling after having warmed up, rapidly depress the accelerator pedal | From 1 1–14 V, momentarily drops slightly | – |
| 14 | No. 2 Injector | | | |
| 2 | No. 3 Injector | | | |
| 15 | No. 4 Injector | | | |
| 3 | No. 5 Injector | | | |
| 16 | No. 6 Injector | | | |
| 4 | Stepper motor coil <A1> | Engine: Warmed up<br>Check immediately after hot restart | Changes repeatedly between B+ and 0–3 V | – |
| 17 | Stepper motor coil <A2> | | | |
| 5 | Stepper motor coil <B1> | | | |
| 18 | Stepper motor coil <B2> | | | |
| 10 | Ignition power transistor unit A | Engine: 3,000 r/min | 0.3–3 V | – |
| 23 | Ignition power transistor unit B | | | |
| 11 | Ignition power transistor unit C | | | |

**TSB Revision**

| Terminal No. | Check item | Check condition (Engine condition) | | Standard value | Remarks |
|---|---|---|---|---|---|
| 13 | Evaporative emission purge solenoid <No. 1> | Ignition switch: ON | | B+ | SOHC – California |
| | | Engine: Warmed up, 3,000 r/min | | 0–3 V | |
| 9 | Evaporative emission purge solenoid | Ignition switch: ON | | B+ | SOHC – Federal, DOHC |
| | | Engine: Warmed up, 3,000 r/min | | 0 – 3V | |
| 9 | Evaporative emission purge solenoid <No. 2> | Ignition switch: ON | | B+ | SOHC – California |
| | | Engine: Warmed up, 3,500 r/min | | 0–10 V | |
| 51 | Engine ignition signal | Engine: 3,000 r/min | | 0.3–3 V | – |
| 52 | Ignition timing adjustment terminal | Ignition switch: ON | Ground the ignition timing adjustment terminal. | 0–1 V | – |
| | | | Disconnect the ground from the ignition timing adjustment terminal. | 4.0–5.5 V | |
| 36 | Check engine/ malfunction indicator lamp | Ignition switch: OFF → ON | | Changes from 0–3 V to 9–13 V (after several seconds have elapsed) | – |
| 6 | EGR solenoid | Ignition switch: ON | | B+ | SOHC – Federal, DOHC |
| | | Engine: While engine is idling after having warmed up, rapidly depress the accelerator pedal | | Temporarily drops slightly from B+ | |
| 74 | Manifold differential pressure sensor | Engine: Idling | | 0.8 – 2.4 V | SOHC – California |
| | | • Engine: Idling<br>• Suddenly depress the accelerator pedal | | Rises from 0.8 – 2.4 V suddenly | |
| 21 | Variable induction control solenoid | Engine: Idling | | 0–3 V | DOHC |
| | | Engine: 5,000 r/min | | B+ | |
| 44 | Anti-lock braking signal | Engine: Idling | | B+ | – |
| | | • When vehicle first starts to move after turning the ignition switch to ON<br>• Vehicle speed: 0 → 10 km/h (0 → 0.6 mph) | | Changes B+ to 0–3 V (temporarily) | |

# THROTTLE BODY

13100770026

## REMOVAL AND INSTALLATION

**Pre-removal Operation**
- Draining of the Engine Coolant
  (Refer to GROUP 00 – Maintenance Service.)

**Post-installation**
- Supplying of the Engine Coolant
  (Refer to GROUP 00 – Maintenance Service.)
- Accelerator Cable Play Adjustment
  (Refer to GROUP 17 – On-vehicle Service.)
- Throttle cable Adjustment
  (Refer to GORUP 23A – On-vehicle Service.)

### 3.0L-12 VALVE Engine

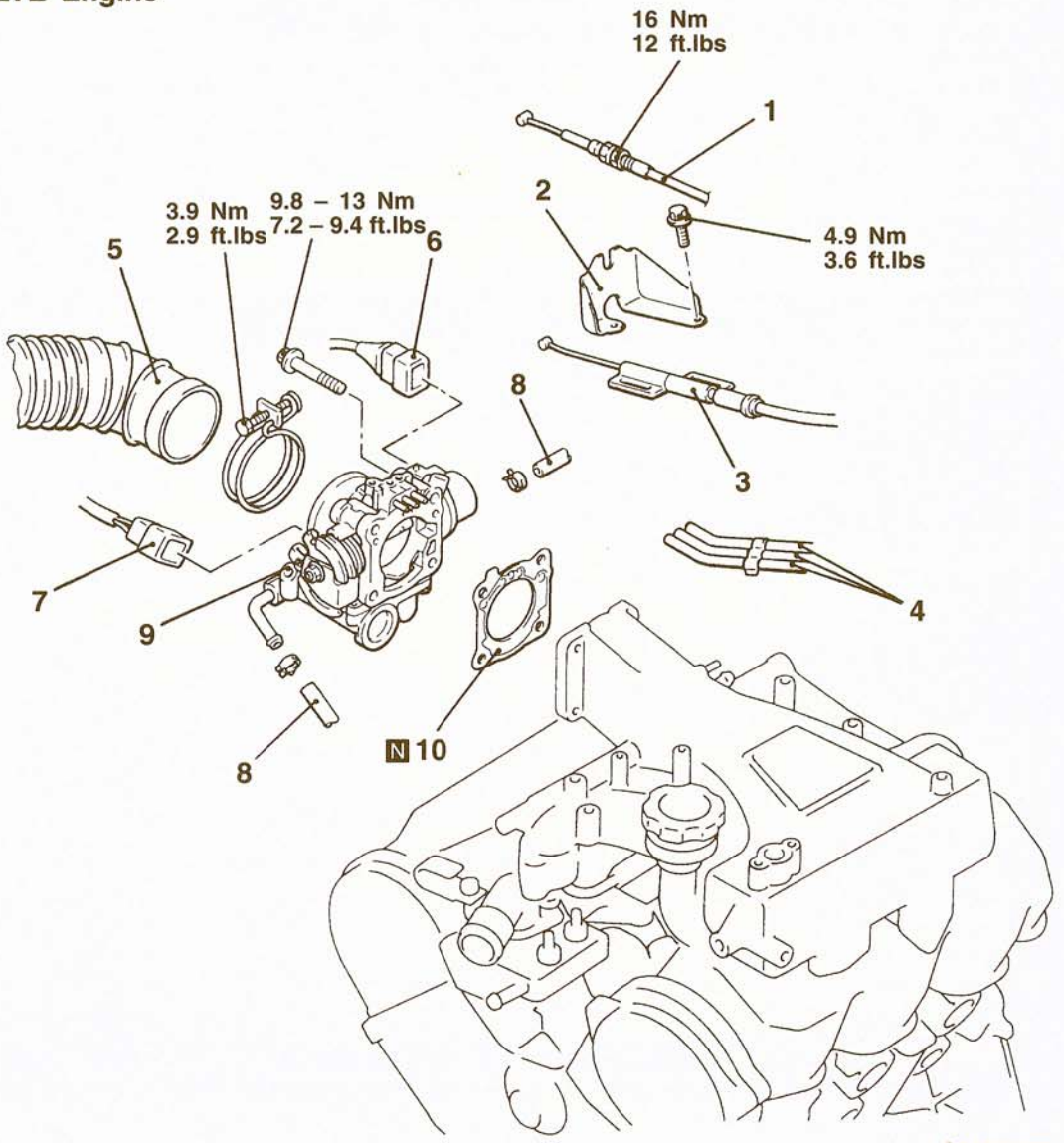


**Removal steps**

1. Throttle cable connection
2. Throttle cable bracket
3. Accelerator cable connection
4. Vacuum hose conneciton
5. Air intake hose connection
6. Throttle positon sensor connector
7. IAC motor connector
8. Water hoses connection
9. Throttle body

▶A◀ 9. Gasket

**TSB Revision**

### 3.0L-24 VALVE Engine

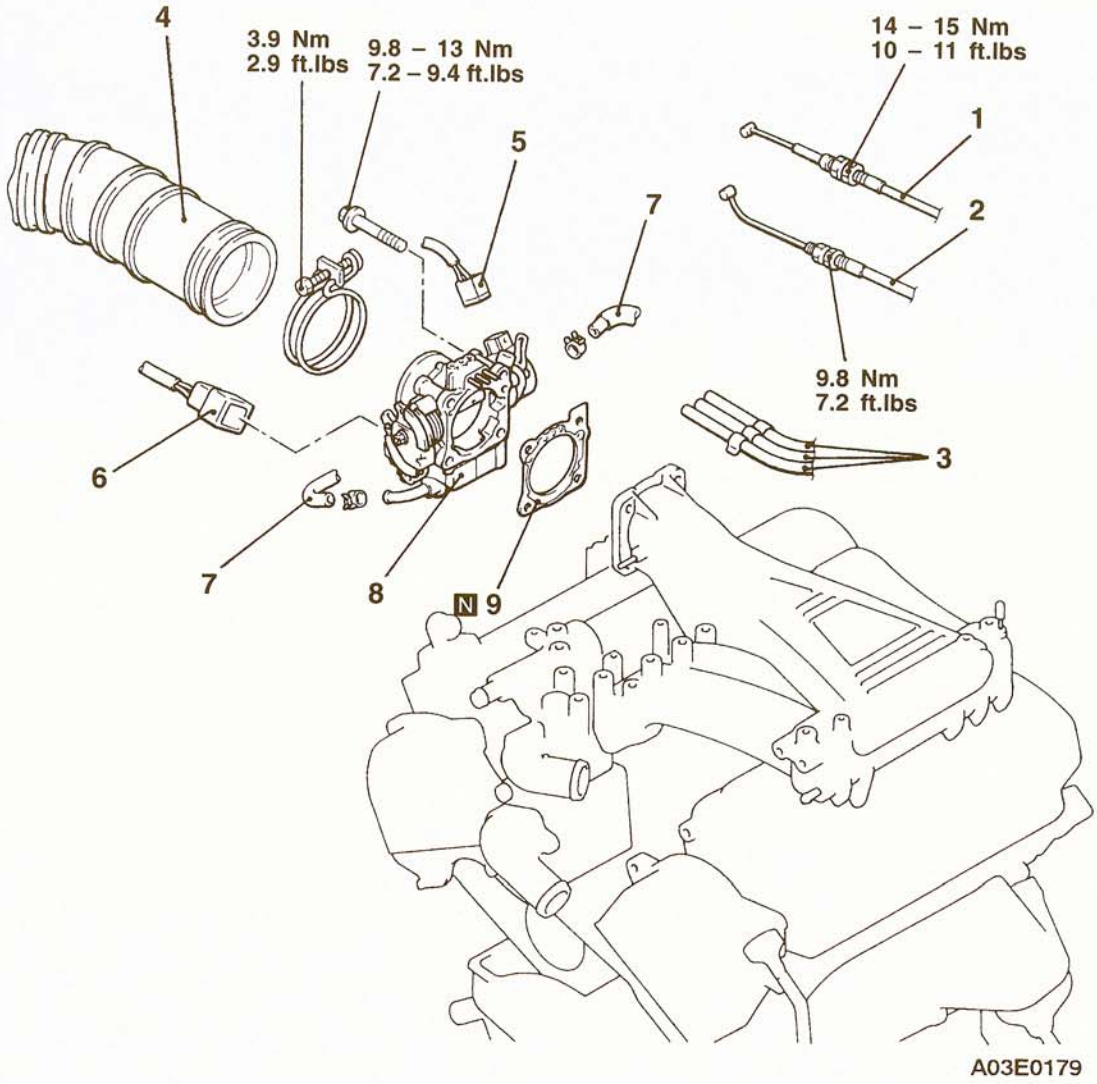


**Removal steps**

1. Throttle cable connection
2. Accelerator cable connection
3. Vacuum hose conneciton
4. Air intake hose connection
6. Throttle positon sensor connector
7. IAC motor connector
8. Water hose connection
9. Throttle body

▶A◀ 9. Gasket

### 3.5L Engine

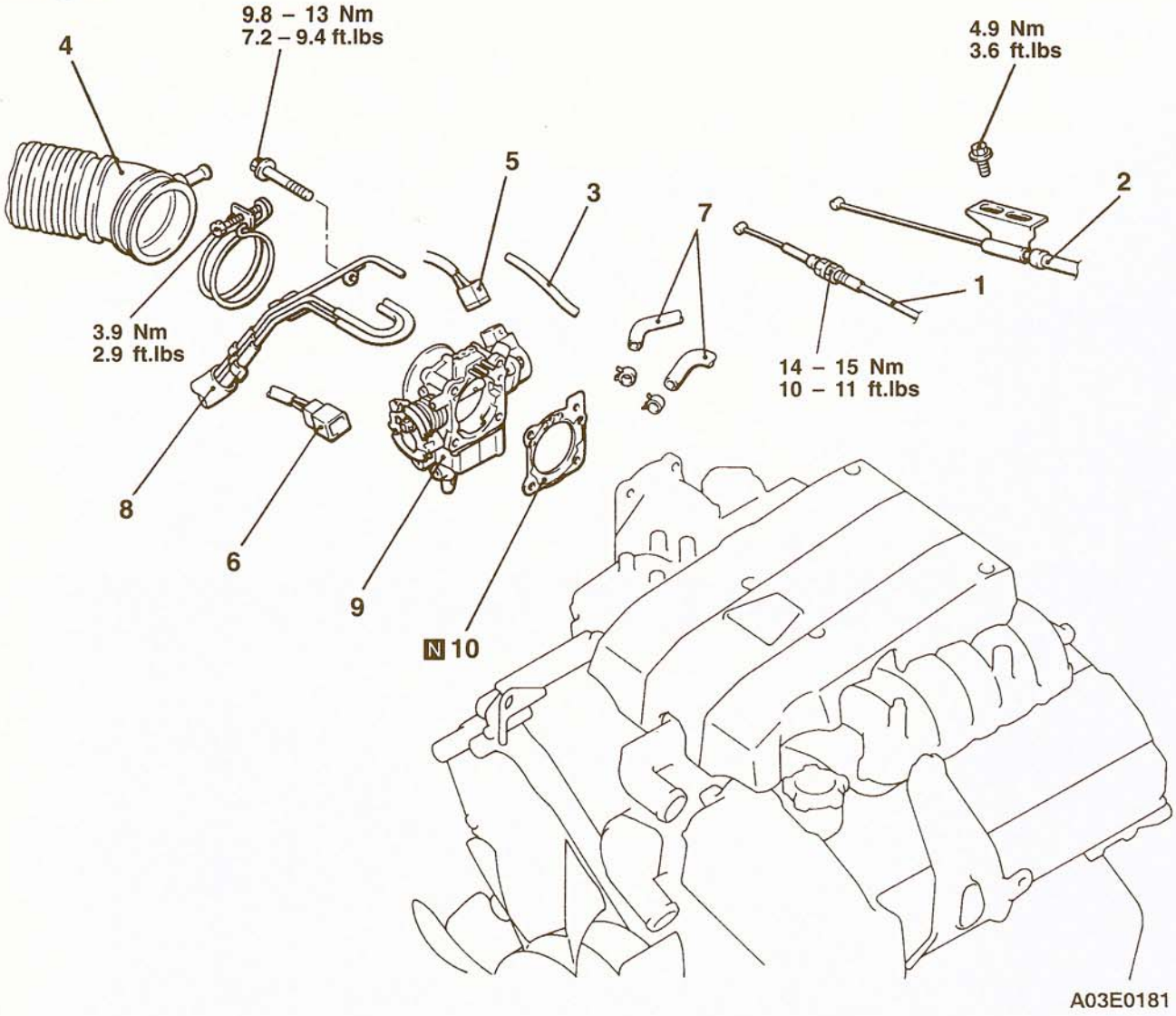


**Removal steps**

1. Throttle cable connection
2. Accelerator cable connection
3. Vacuum hose conneciton
4. Air intake hose connection
5. Throttle positon sensor connector
6. IAC motor connector
7. Water hose connection
8. Vacuum pipe assembly
9. Throttle body

▶A◀ 10. Gasket

TSB Revision

**3.0L-12 VALVE Engine**

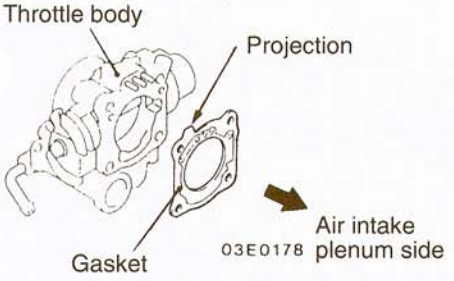


**3.0L-24 VALVE Engine and 3.5L Engine**

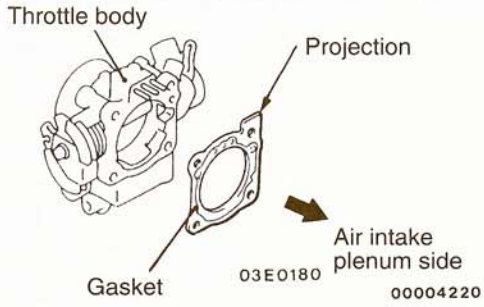


## INSTALLATION SERVICE POINT

### ▶A◀ GASKET INSTALLATION

Install the gasket with the projection in the position shown in the illustration.

**Caution**

**If the gasket installation direction is incorrect, it may result in faulty idling or other trouble.**

NOTES

# FUEL SUPPLY

## CONTENTS

13509000067


FUEL LINE AND VAPOR LINE ..... 9

FUEL PUMP ..... 4

FUEL TANK ..... 6

GENERAL SPECIFICATIONS ..... 2

ON-VEHICLE SERVICE ..... 3

- Fuel Pressure ..... 3
- Fuel Pump Operation Check ..... 3

SPECIAL TOOL ..... 2

TROUBLESHOOTING ..... 2

## GENERAL SPECIFICATIONS

13500020017

| Items | | Specifications |
|---|---|---|
| Fuel | Tank capacity $dm^3$ (U.S. gal., Imp. gal.) | 92 (24.3, 20.2) |
| Fuel pump | Type | Electrical, in-tank type |
| | Driven by | Electric motor |

## SPECIAL TOOL

13500060057

| Tool | Tool Number and name | Supersession | Application |
|---|---|---|---|
| 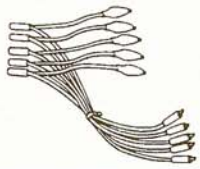 | MB991348<br>Test harness set | Tool not available | • Fuel tank differential pressure sensor check |

## TROUBLESHOOTING

13500070036

| Trouble Symptom | Probable Cause | Remedy |
|---|---|---|
| Malfunction of engine due to insufficient fuel supply | Bent or kinked fuel pipe or hose | Repair or replace |
| | Clogged fuel pipe or hose | Clean or replace |
| | Dirty or rusted fuel tank interior | |
| | Clogged fuel filter or in-tank fuel filter | Replace |
| | Malfunction of fuel pump (clogged pump filter) | |
| | Water in fuel filter | Replace the fuel filter or clean the fuel tank and fuel line. |
| Malfunction of evaporative emission control system (when tank cap is removed, pressure releasing noise is heard) | Missing vapor line | Correct |
| | Disconnected vapor line piping joint | |
| | Folded, bent, cracked or clogged vapor line | Replace |
| | Malfunction of filler tube | |
| | Malfunction of fuel tank pressure control valve | |

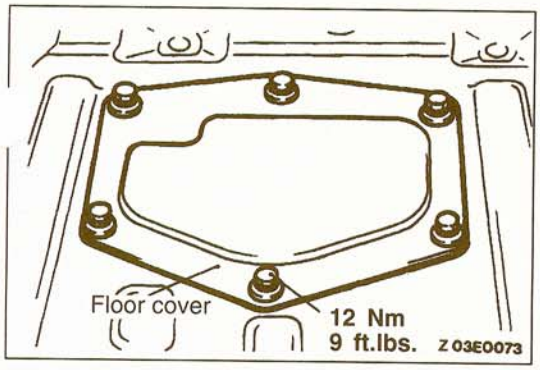


# ON-VEHICLE SERVICE

13100090078

## FUEL PRESSURE

### HOW TO REDUCE THE FUEL LINE INTERNAL PRESSURE

When removing the fuel pipe and hose, etc., fuel under high pressure will be inside the fuel line, so carry out the following procedure to release the pressure to prevent the fuel from spraying out.

(1) Take out the carpet in the cargo compartment and remove the floor cover.

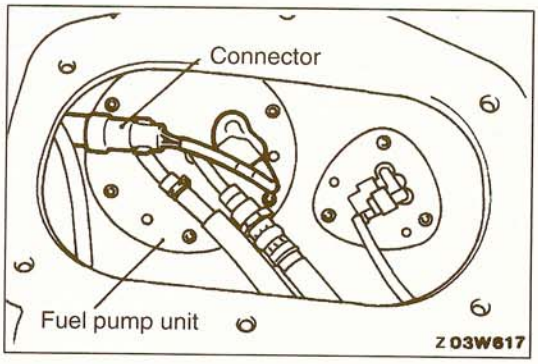


(2) Disconnect the fuel pump unit connector.
(3) After starting the engine and letting it run until it stops, turn the ignition switch to OFF.
(4) Connect the fuel pump unit connector.
(5) Install the floor cover packing and the floor cover.

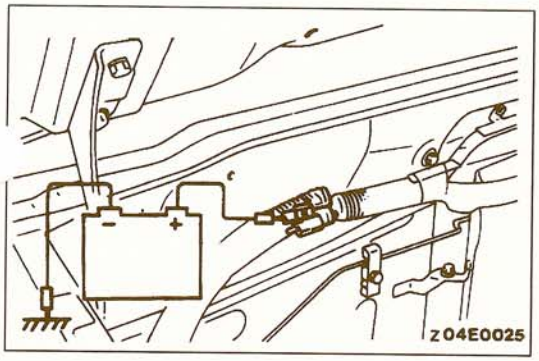


## FUEL PUMP OPERATION CHECK

13500100018

(1) Use the scan tool to force-drive the fuel pump, and check the operation of the fuel pump.
(For inspection using the scan tool, refer to GROUP 13A – On-vehicle Inspection of MFI Components.)
(2) If the fuel pump does not operate, check by the following procedure. If the results are normal, check the drive circuit.
1) Turn the ignition switch to OFF.
2) When the fuel pump drive connector is connected directly to the battery, check that the sound of the fuel pump operation can be heard.

NOTE
It is hard to hear the sound of an in-tank type fuel pump. So remove the fuel tank filler tube cap to hear it from the tank inlet.

3) Check if the fuel pressure can be felt by pinching the high pressure fuel hose with fingertips.

# FUEL PUMP

13500220011

## REMOVAL AND INSTALLATION

**Pre-removal and Post-installation Operation**
- Fuel Drain and Filling
- Floor Carpet Removal and Installation

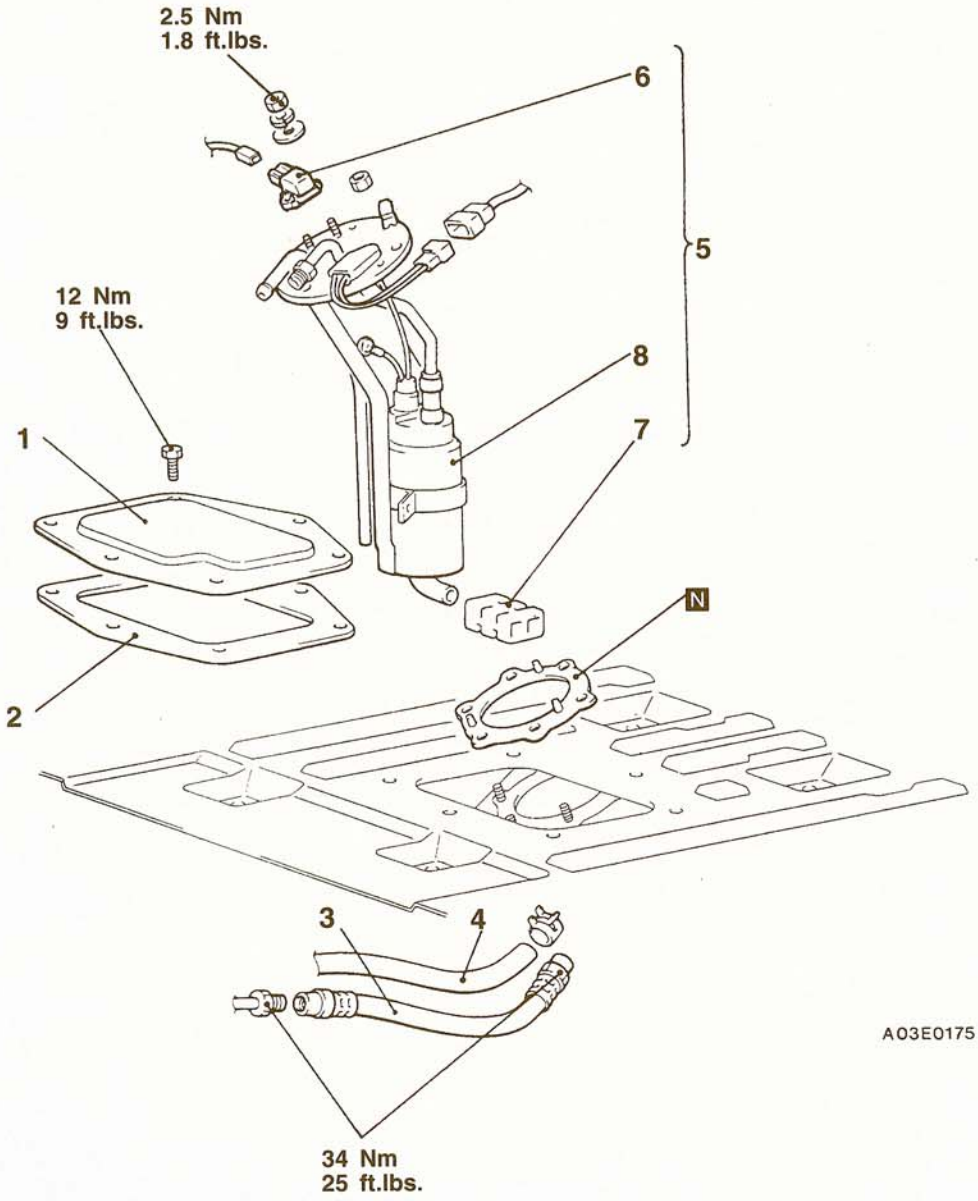


**Removal steps**

1. Floor cover
2. Packing

◀A▶ ▶B◀ 3. High-pressure fuel hose

4. Fuel return hose connection

5. Fuel pump and filter assembly

▶A◀ 6. Fuel tank differential pressure sensor

7. Filter
8. Fuel pump assembly

**TSB Revision**

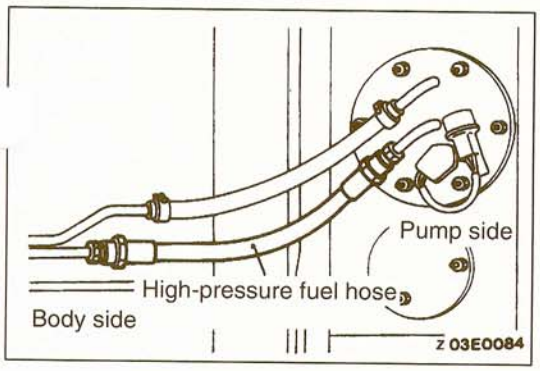


## REMOVAL SERVICE POINT

### ◀A▶ HIGH-PRESSURE FUEL HOSE REMOVAL

After disconnecting the high-pressure fuel hose at the body-side main pipe connection, disconnect the pump-side connection.

## INSTALLATION SERVICE POINTS

### ▶A◀ FUEL TANK DIFFERENTIAL PRESSURE SENSOR INSTALLATION

**Caution**
**When removing and installing the sensor, be careful not to damage the packing or let foreign materials stick to the packing, as this will decrease sealing performance.**

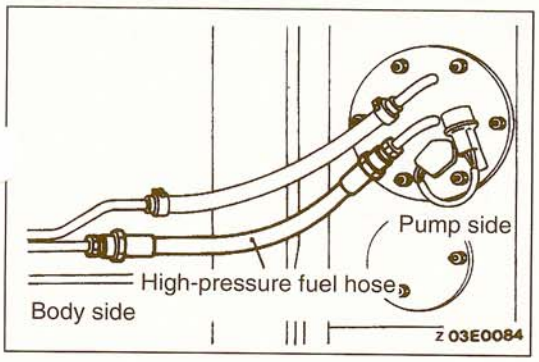


### ▶B◀ HIGH-PRESSURE FUEL HOSE INSTALLATION

After tightening the high-pressure fuel hose at the pump side, tighten the connector at the body side main pipe.

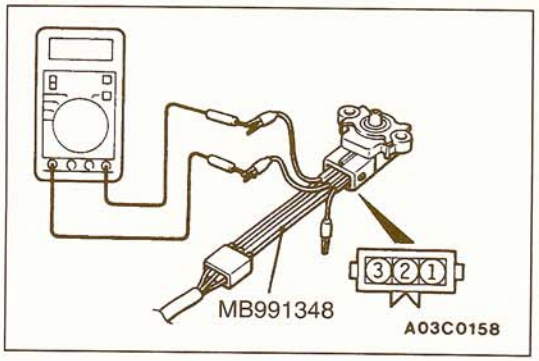


## INSPECTION

13500320018

### FUEL TANK DIFFERENTIAL PRESSURE SENSOR CHECK

(1) Disconnect the fuel tank differential pressure sensor connector and connect the special tool between the terminals of the disconnected connector.
(2) Turn the ignition switch to ON and take a reading of the following output voltage.
Between terminals (2) and (3).

**Standard value: 2.0 – 3.0 V**

# FUEL TANK

13500190077

## REMOVAL AND INSTALLATION

**Pre-removal and Post-installation Operation**
- Fuel Draining and Filling
- Fuel Tank Filler Tube Protector Removal and Installation
- Floor Carpet Removal and Installation
- Floor Cover Removal and Installation

<Except 3.0L-24 VALVE ENGINE for California>

<3.0L-24 VALVE ENGINE for California>

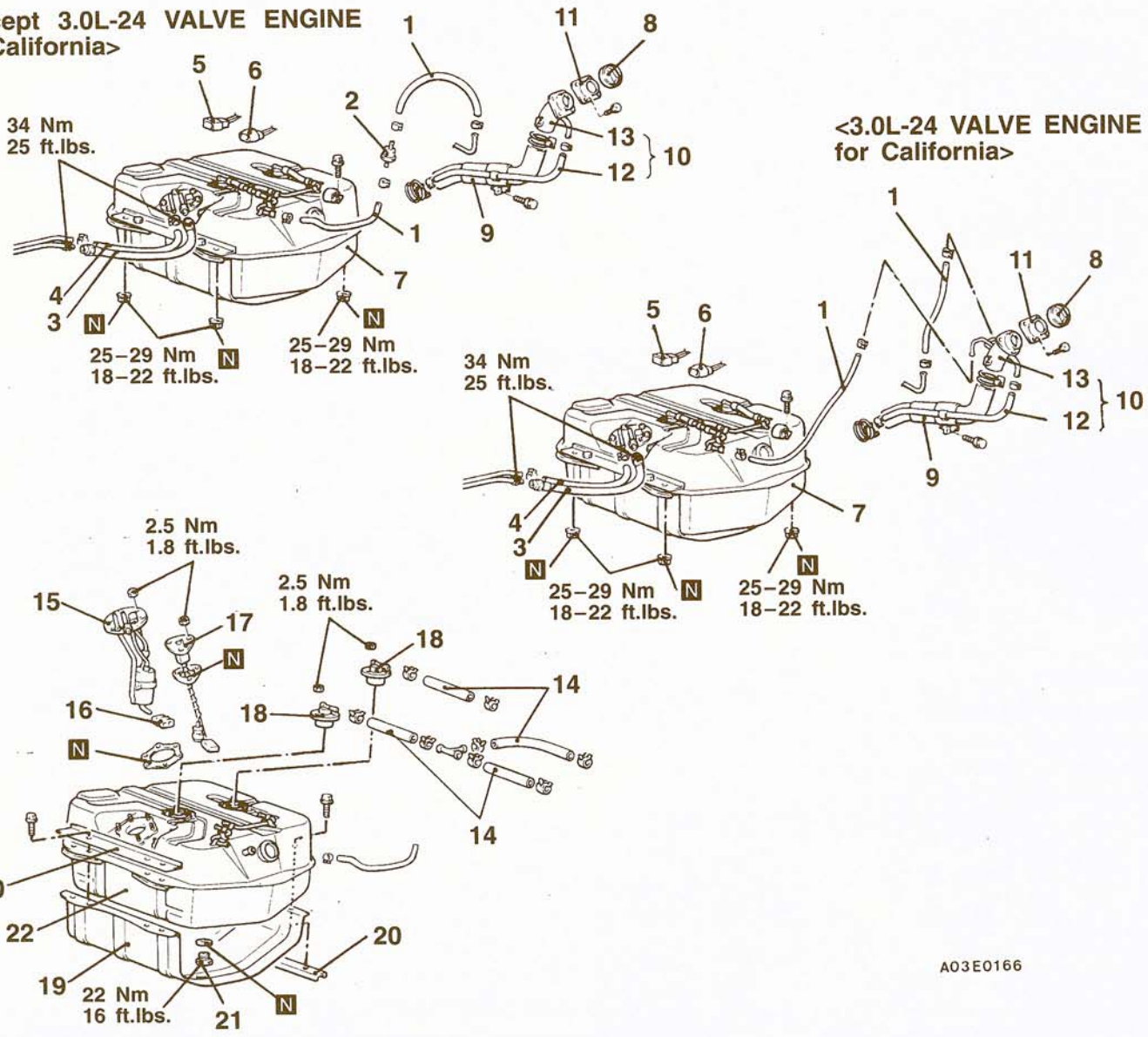


**Removal steps**

1. Vapor hoses
▶B◀ 2. Fuel tank pressure relief valve <Except 3.0L-24 VALVE ENGINE for California>
◀A▶ ▶A◀ 3. High-pressure fuel hose
4. Fuel return hose
5. Fuel pump connector
6. Fuel gage unit connector
7. Fuel tank assembly
8. Fuel tank filler cap
9. Fuel tank filler hose
10. Fuel tank filler tube and vapor hose assembly
11. Packing
12. Vapor hose
13. Fuel tank filler tube
14. Vapor hoses
15. Fuel pump assembly
16. Filter
17. Fuel gage unit
18. Fuel tank rollover valve
19. Fuel tank protector
20. Plate
21. Drain plug
22. Fuel tank

**TSB Revision**

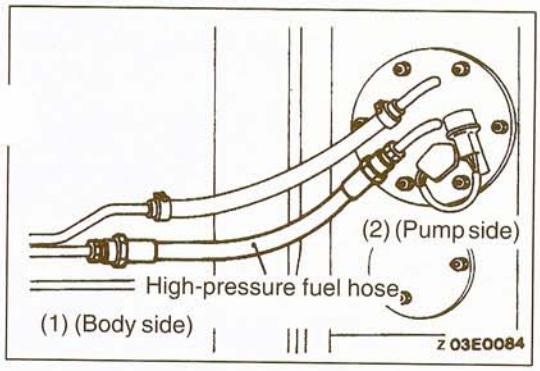


## REMOVAL SERVICE POINT

### ◀A▶ HIGH-PRESSURE FUEL HOSE REMOVAL

After disconnecting the high-pressure fuel hose at the body-side main pipe connection, disconnect the pump-side connection.

**Caution**
**The fuel line has some residual pressure, so cover it with a shop towel.**

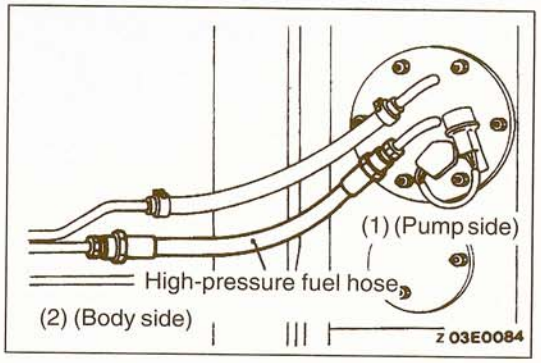


## INSTALLATION SERVICE POINTS

### ▶A◀ HIGH-PRESSURE FUEL HOSE INSTALLATION

After tightening the high-pressure fuel hose at the pump side, tighten the connection at the body-side main pipe.

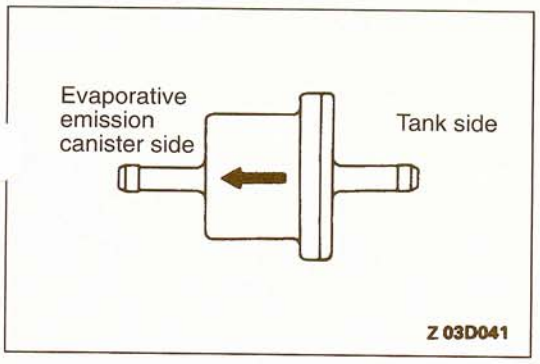


### ▶B◀ FUEL TANK PRESSURE RELIEF VALVE INSTALLATION

Install the fuel tank pressure relief valve, being careful not to mistake the direction.

## INSPECTION

13500200046

- Check the hoses and the pipes for cracks or damage.
- Check the fuel tank filler tube cap for malfunction.
- Check the fuel tank for deformation, corrosion or cracks.
- Check the fuel tank for dust or foreign material.

  NOTE
  If the inside of the fuel tank is to be cleaned, use any one of the following:
  (1) Kerosene
  (2) Trichloroethylene
  (3) A neutral emulsion type detergent
- Check the in-tank fuel filter for damage or clogging.
- Check the check valve for malfunction.

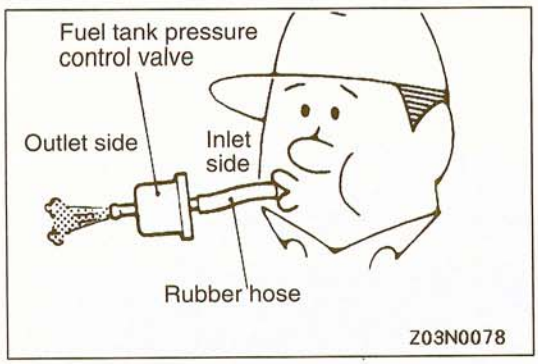


## FUEL TANK PRESSURE RELIEF VALVE CHECK

13500110011

Attach a clean rubber hose, and check the operation of th fuel tank pressure relief valve.

| Inspection Procedure | Normal Condition |
|---|---|
| Blow lightly from the inlet side (fuel tank side). | Air passes through after a slight resistance is felt. |
| Blow lightly from the outlet side (evaporative emission canister side). | Air passes through. |

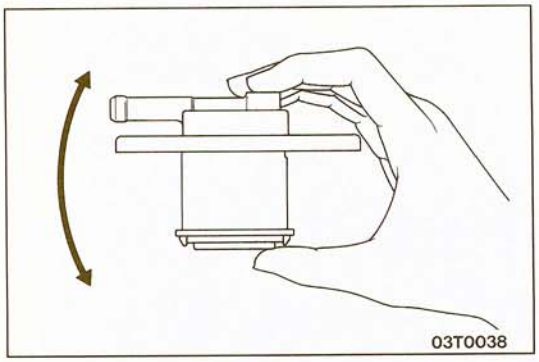


## FUEL TANK ROLLOVER VALVE CHECK

13500300029

If the sound of the float valve moving (knocking sound) can be heard when the valve assembly is gently shaken up and down, then the valve is okay.

# FUEL LINE AND VAPOR LINE

13500340014

## REMOVAL AND INSTALLATION

**Pre-removal Operation**
- Residual Pressure Release from High-pressure Fuel Hose (Refer to P.13F-3.)

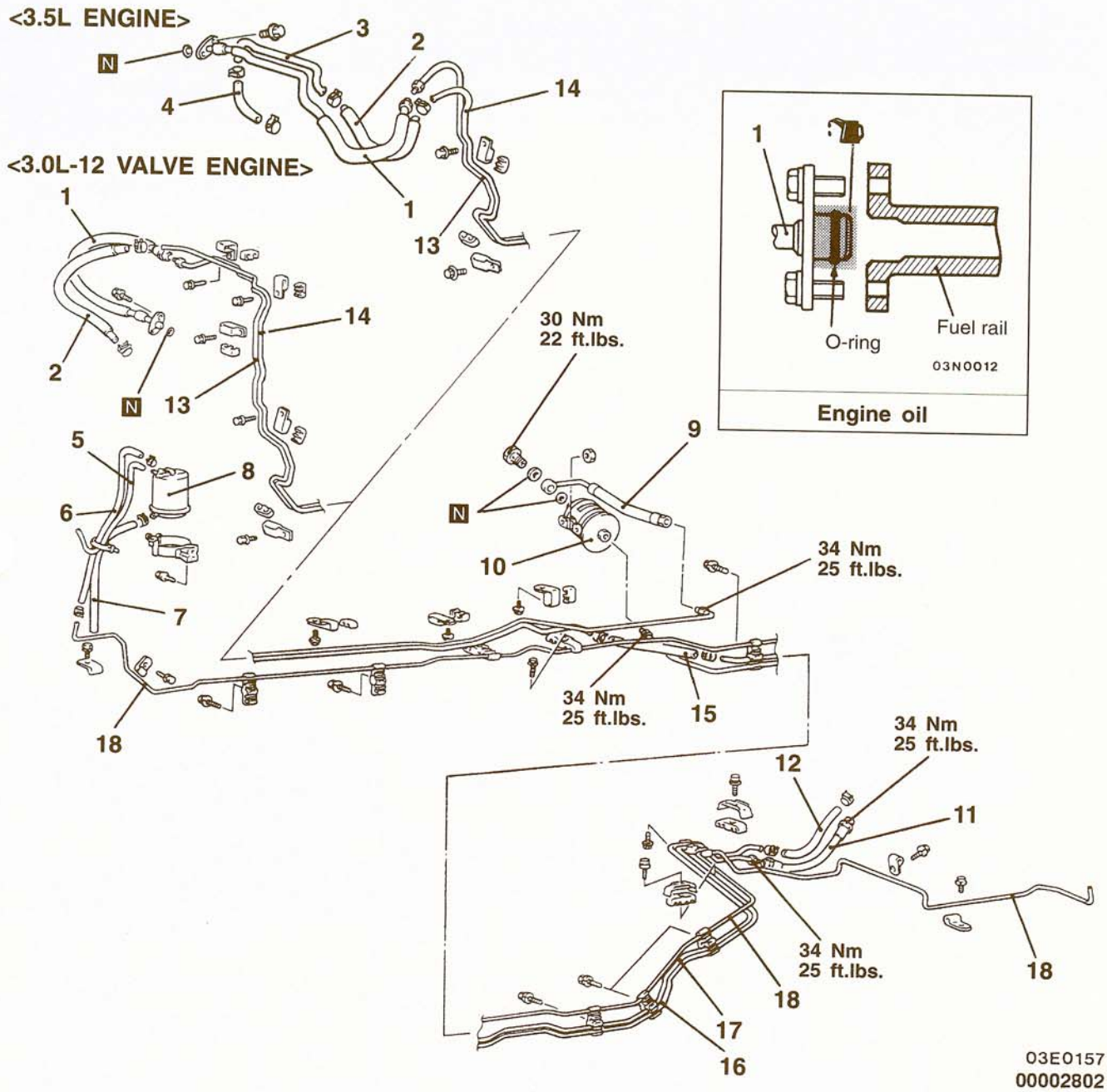


**Removal steps**

◀A▶ ▶B◀ 1. High-pressure fuel hose
▶A◀ 2. Fuel return hose
3. Fuel return pipe
▶A◀ 4. Fuel return hose
▶A◀ 5. Fuel vapor hose
▶A◀ 6. Fuel vapor hose
▶A◀ 7. Fuel vapor hose
8. Evaporative emission canister
◀B▶ 9. High-pressure fuel hose
10. Fuel filter
◀C▶ 11. High-pressure fuel hose
▶A◀ 12. Fuel return hose
13. Fuel main pipe (front)
14. Fuel return pipe (front)
▶A◀ 15. Fuel return hose
16. Fuel main pipe (rear)
17. Fuel return pipe (rear)
18. Fuel vapor pipe

**TSB Revision**

<3.0L-24 VALVE ENGINE>

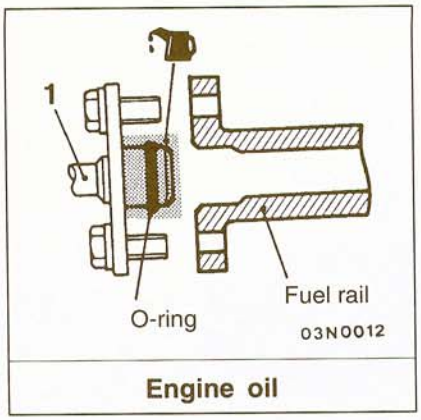


Engine oil

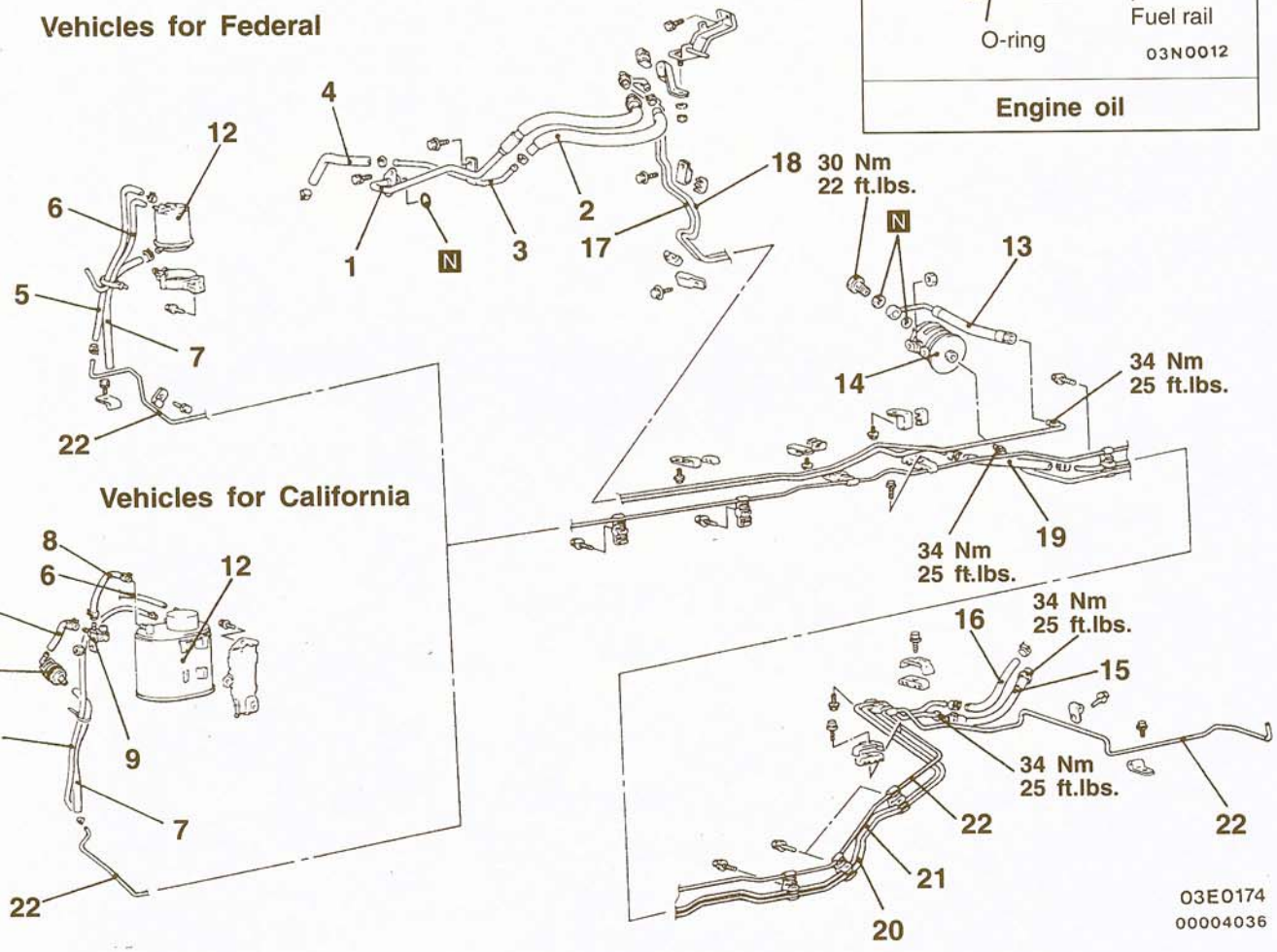


**Removal steps**

◀A▶ ▶B◀ 1. High-pressure fuel hose
▶A◀ 2. Fuel return hose
3. Fuel return pipe
▶A◀ 4. Fuel return hose
▶A◀ 5. Fuel vapor hose
▶A◀ 6. Fuel vapor hose
▶A◀ 7. Fuel vapor hose
▶A◀ 8. Fuel vapor hose
9. Evaporative emission ventilation solenoid
▶A◀ 10. Fuel vapor hose
11. Air filter
12. Canister
◀B▶ 13. High-pressure fuel hose
14. Fuel filter
◀C▶ 15. High-pressure fuel hose
▶A◀ 16. Fuel return hose
17. Fuel main pipe (front)
18. Fuel return pipe (front)
▶A◀ 19. Fuel return hose
20. Fuel main pipe (rear)
21. Fuel return pipe (rear)
22. Fuel vapor pipe

TSB Revision

## REMOVAL SERVICE POINTS

### ◀A▶ HIGH-PRESSURE FUEL HOSE REMOVAL

**Caution**
**Cover the high-pressure hose connection with shop towels to prevent splashing of fuel that could be caused by some residual pressure in the fuel pipe line.**

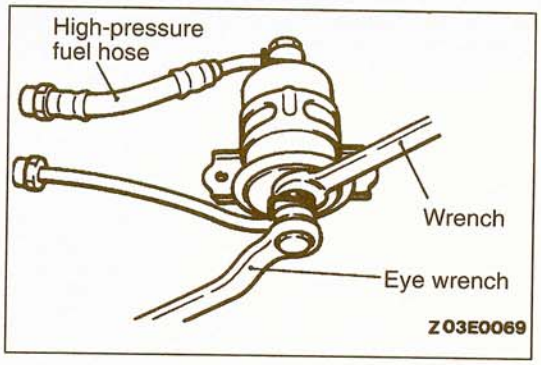


### ◀B▶ HIGH-PRESSURE FUEL HOSE REMOVAL

Hold the fuel filter with a wrench and use an eye wrench to remove the eye bolt which is securing the high-pressure fuel hose.

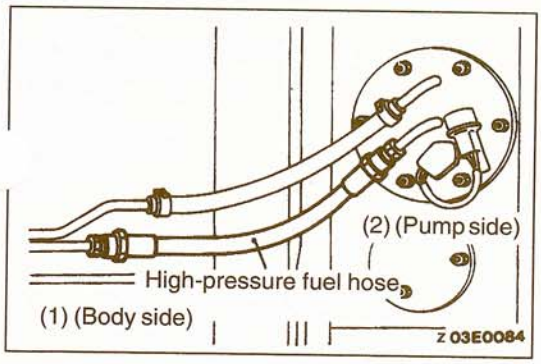


### ◀C▶ HIGH-PRESSURE FUEL HOSE REMOVAL

After disconnecting the high-pressure fuel hose at the body-side main pipe connection, disconnect the pump-side connection.

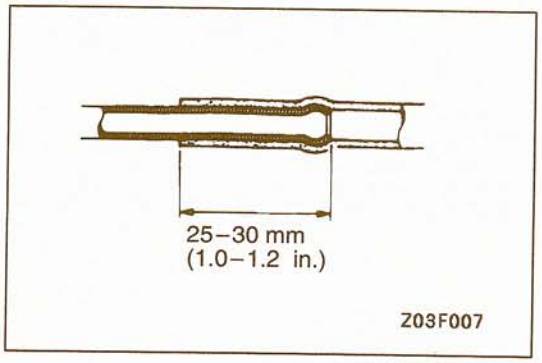


## INSTALLATION SERVICE POINTS

### ▶A◀ FUEL RETURN HOSE/FUEL VAPOR HOSE INSTALLATION

Insert each hose approximately 25–30 mm (1.0–1.2 in.) into the corresponding pipe.

### ▶B◀ HIGH-PRESSURE FUEL HOSE (FUEL RAIL SIDE) INSTALLATION

Insert the hose, being careful not to damage the O-ring, and tighten securely.

## INSPECTION

13500350017

- Check the fuel hoses and pipes for cracks, bends, deformation, deterioration or clogging.
- Check the fuel filter for clogging or damage.
- Check the canister for clogging or damage.

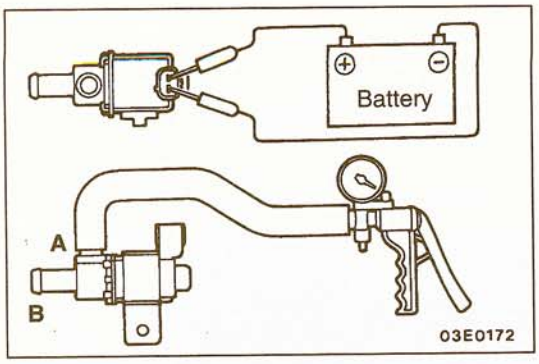


## EVAPORATIVE EMISSION VENTILATION SOLENOID

13500360010

1. Connect a hand vacuum pump to nipple (A) of the solenoid (refer to the illustration at left).
2. Check airtightness by applying a vacuum with voltage applied directly from the battery to the evaporative emission ventilation solenoid.

| Battery voltage | Normal condition |
|---|---|
| Applied | Vacuum maintained |
| Not applied | Vacuum leaks |

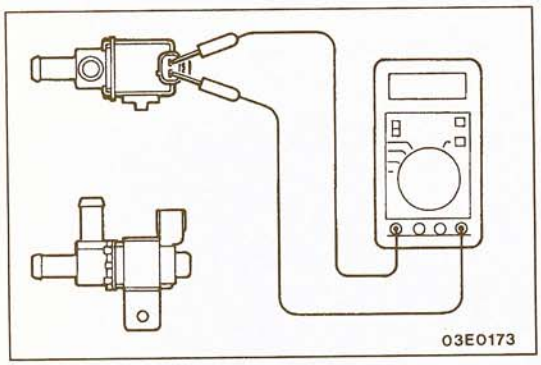


3. Measure the resistance between the terminals of the solenoid valve.

   **Standard value: 17 – 21 Ω [at 20°C (68°F)]**

# ENGINE COOLING

## CONTENTS

14109000062


COOLING FAN ..... 8
GENERAL SPECIFICATIONS ..... 2
LUBRICANTS ..... 3
ON-VEHICLE SERVICE ..... 4
- Drive Belt Tension Check and Adjustment ..... 5
- Engine Coolant Concentration Test ..... 5
- Engine Coolant Leak Check ..... 4
- Engine Coolant Replacement ..... 5
- Radiator Cap Pressure Check ..... 5

RADIATOR* ..... 6
SEALANTS AND ADHESIVES ..... 3
SERVICE SPECIFICATIONS ..... 2
SPECIAL TOOL ..... 3
THERMOSTAT <3.0L-12 VALVE engine> ... 10
THERMOSTAT <3.0L-24 VALVE engine, 3.5L engine> ..... 12
THERMO SWITCH <A/T>, ENGINE COOLANT TEMPERATURE GAGE UNIT AND ENGINE COOLANT TEMPERATURE SENSOR ..... 16
TROUBLESHOOTING ..... 4
WATER PUMP ..... 14


**WARNINGS REGARDING SERVICING OF SUPPLEMENTAL RESTRAINT SYSTEM (SRS) EQUIPPED VEHICLES**

**WARNING!**

**(1) Improper service or maintenance of any component of the SRS, or any SRS-related component, can lead to personal injury or death to service personnel (from inadvertent firing of the air bag) or to the driver (from rendering the SRS inoperative).**

**(2) Service or maintenance of any SRS component or SRS-related component must be performed only at an authorized MITSUBISHI dealer.**

**(3) MITSUBISHI dealer personnel must thoroughly review this manual, and especially its GROUP 52B – Supplemental Restraint System (SRS) and GROUP 00 – Maintenance Service before beginning any service or maintenance of any component of the SRS or any SRS-related component.**

NOTE

The SRS includes the following components: SRS diagnosis unit, SRS warning light, air bag module, clock spring, and interconnecting wiring. Other SRS-related components (that may have to be removed/installed in connection with SRS service or maintenance) are indicated in the table of contents by an asterisk (*).

## GENERAL SPECIFICATIONS

14100020029

| Items | | Specifications |
|---|---|---|
| Cooling method | | Water-cooled pressurized, forced circulation |
| Radiator type | | Pressurized corrugated fin type |
| Radiator Performance kJ/h (kcal/h, BTU/h) | 3.0L engine – A/T | 194,000 (46,200, 183,333) |
| | 3.0L engine – M/T | 182,100 (43,500, 172,619) |
| | 3.5L engine | 200,900 (48,000, 190,476) |
| Automatic transmission oil cooler <Vehicles with A/T> performance kJ/h (kcal/h, BTU/h) | | 6,200 (1,480, 5,873) |
| Thermostat type | | Wax type with jiggle valve |
| Thermostat identification mark | 3.0L-12 VALVE engine | 88 (Stamped on flange) |
| | 3.0L-24 VALVE engine, 3.5L engine | 82 (Stamped on flange) |
| Fan clutch type | | Thermo type with spiral type bimetal |
| Water pump type | | Centrifugal-type impeller |

## SERVICE SPECIFICATIONS

14100030053

| Items | | | Standard value | Limit |
|---|---|---|---|---|
| Radiator cap | High pressure valve opening pressure kPa (psi) | | 75–105 (11–15) | 65 (9.2) |
| | Vacuum valve opening pressure kPa (psi) | | –5 or less (–.7 or less) | – |
| Range of coolant antifreeze concentration % | | | 30–60 | – |
| Thermostat | Valve opening temperature of thermostat | 3.0L-12 VALVE engine °C (°F) | 88 (190) | – |
| | | 3.0L-24 VALVE engine °C (°F) | 82 (180) | – |
| | | 3.5L engine °C (°F) | 82 (180) | – |
| | Full-opening temperature of thermostat | 3.0L-12 VALVE engine °C (°F) | 100 (212) | – |
| | | 3.0L-24 VALVE engine °C (°F) | 95 (203) | – |
| | | 3.5L engine °C (°F) | 95 (203) | – |
| Engine coolant temperature gage unit resistance At 70°C (158°F) Ω | | | 104±13.5 | – |
| Engine coolant temperature sensor resistance | | At 20°C (68°F) kΩ | 2.37±0.24 | – |
| | | At 80°C (176°F) Ω | 290±32 | – |
| Thermo switch <A/T> (always opened type) OFF→ON operating temperature °C (°F) | | | More than 50 (112) | – |

**TSB Revision**

## LUBRICANTS

14100040056

| Items | Recommended antifreeze | Quantity |
|---|---|---|
| Engine coolant | DIA QUEEN LONG–LIFE COOLANT (Part No. 0103044) or HIGH QUALITY ETHYLENE GLYCOL ANTIFREEZE COOLANT | 9.5 $dm^3$ (10.0 qts.)* |

NOTE
* includes 0.65 $dm^3$ (.69 qts.) in reserve tank.

## SEALANTS AND ADHESIVES

14100050059

| Items | Specified sealants and adhesives |
|---|---|
| Cylinder block drain plug | 3M Nut Locking Part No. 4171 or equivalent |
| Engine coolant temperature sensor | |
| Engine coolant temperature gage unit | 3M ATD Part No. 8660 or equivalent |
| Thermo switch <A/T> | |

## SPECIAL TOOL

14100060014

| Tool | Tool number and name | Supersession | Application |
|---|---|---|---|
|  00004293 | MIT210863<br>Radiator cap test adapter | – | Radiator cap pressure test |

# TROUBLESHOOTING

14100070031

| Trouble Symptom | Probable Cause | | Remedy |
|---|---|---|---|
| Overheat | Insufficient engine coolant | | Refill |
| | Antifreeze concentration too great | | Correct |
| | Loose or broken drive belt | | Replace |
| | Fan clutch does not operate | | Replace |
| | Damaged or blocked (insufficiently ventilated) radiator fins | | Correct |
| | Water leaks | Damaged radiator core joint | Replace |
| | | Corroded or cracked hoses (radiator hose, heater hose, etc.) | Replace |
| | | Loose bolt or malfunction of gasket in water outlet fitting (thermostat) | Correct or replace |
| | | Loose water pump mounting bolt or faulty gasket | Correct or replace |
| | | Faulty radiator cap valve or incorrect setting of spring | Replace |
| | Faulty thermostat operation | | Replace |
| | Faulty water pump operation | | Replace |
| | Water passage is clogged with slime, rust deposit or other foreign substance | | Clean |
| No rise in temperature | Faulty thermostat | Faulty thermostat | Replace |

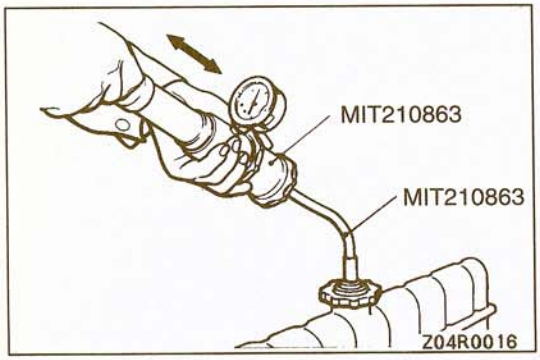


# ON-VEHICLE SERVICE

14100100044

## ENGINE COOLANT LEAK CHECK

1. Loosen radiator cap.
2. Check that the coolant level is up to the filler neck.
3. Install a radiator cap tester to the radiator filler neck and apply 160 kPa (23 psi) pressure. Hold for two minutes in that condition, while checking for leakage from the radiator, hose or connections.

   **Caution**
   **Be sure to completely clean away moisture from the places checked.**
   **When the tester is removed, be careful not to spill any coolant from it.**
   **Be careful, when installing and removing the tester and when testing, not to deform the filler neck of the radiator.**

4. If there is leakage, repair or replace the appropriate pa

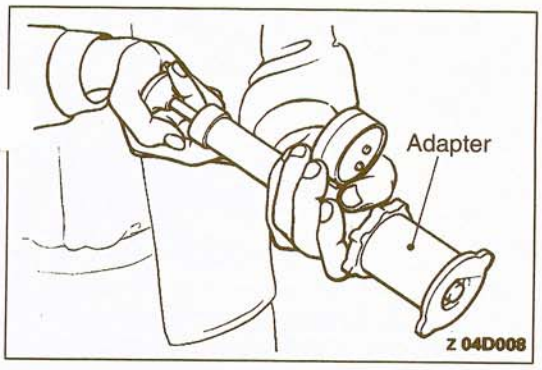


## RADIATOR CAP PRESSURE CHECK 14100130050

1. Use the adapter to attach the cap to the tester.
2. Increase the pressure until the indicator of the gage stops moving.

   **Standard value: 75–105 kPa (11–15 psi)**

   **Limit: 65 kPa (9.2 psi)**
3. Replace the radiator cap if the reading does not remain at or above the limit.

   NOTE
   Check that the cap is clean before testing, since rust or other foreign material on the cap seal will cause an incorrect indication.

## ENGINE COOLANT REPLACEMENT 14100120064

Refer to GROUP 00 – Maintenance Service.

## ENGINE COOLANT CONCENTRATION TEST 14100110061

Refer to GROUP 00 – Recommended Lubricants and Lubricant Capacities Table.

## DRIVE BELT TENSION CHECK AND ADJUSTMENT 14100450019

3.0L-12 VALVE ENGINE: Refer to GROUP 11A – On-vehicle Service.
3.0L-24 VALVE ENGINE: Refer to GROUP 11A – On-vehicle Service.
3.5L ENGINE: Refer to GROUP 11C – On-vehicle Service.

# RADIATOR

14100150063

## REMOVAL AND INSTALLATION

**Caution: SRS**
**Be careful not to subject the front impact sensor to any shocks during removal and installation of the radiator.**

**Post-installation Operation**
- Under Cover Installation <A/T>
- Air Cleaner Case Installation <3.0L-24 VALVE engine, 3.5L engine>
- Engine Coolant Supplying
- Automatic Transmission Fluid Supplying <A/T> (Refer to GROUP 00 – Maintenance Service.)

**Pre-removal Operation**
- Engine Coolant Draining
- Under Cover Removal <A/T>
- Air Cleaner Case Removal <3.0L-24 VALVE engine, 3.5L engine>

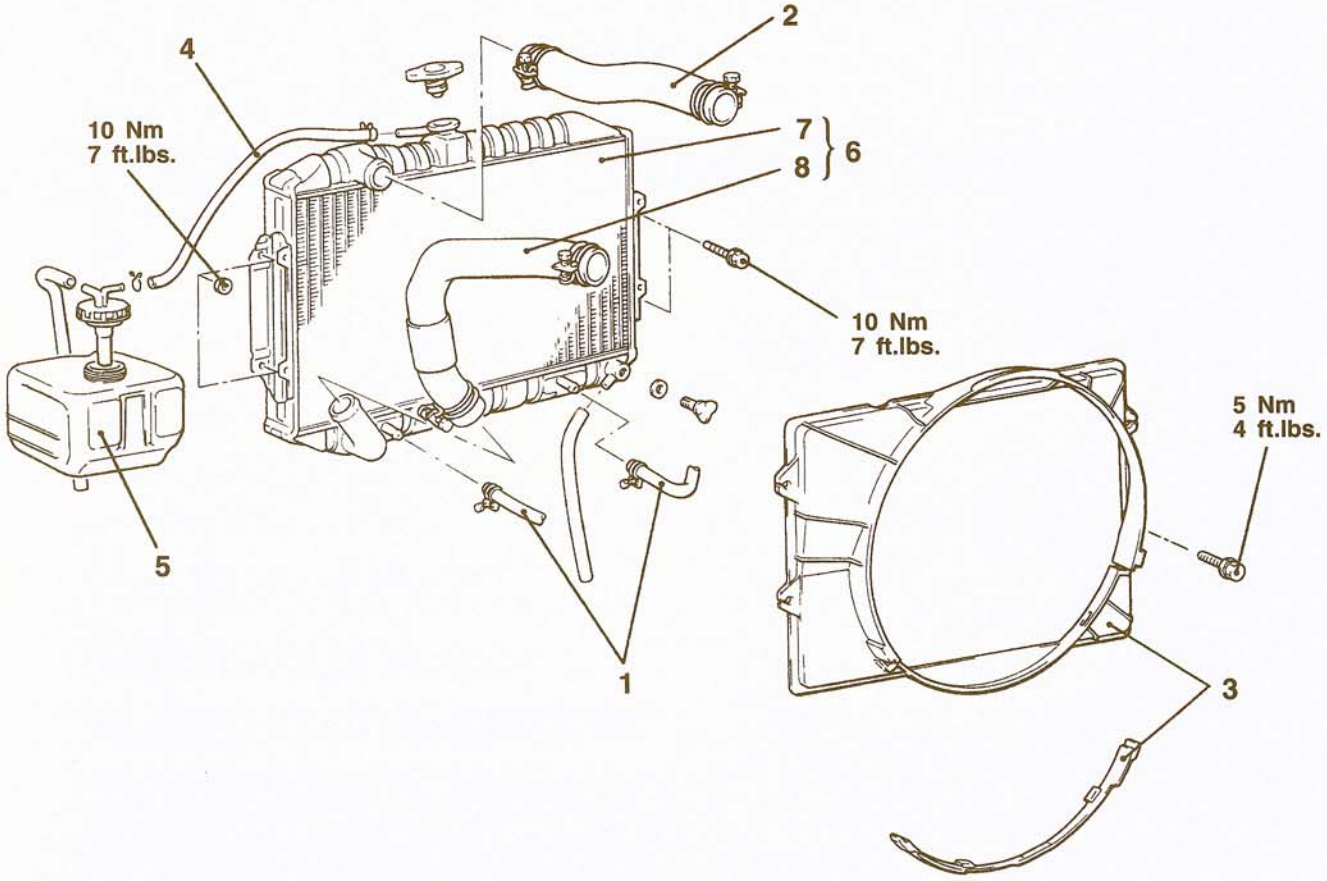


A04E0040

**Removal steps**

1. Automatic transmission oil cooler hose connection <A/T>
2. Radiator upper hose
3. Radiator shroud
4. Overflow hose
5. Reserve tank
6. Radiator and radiator lower hose
7. Radiator
8. Radiator lower hose

**TSB Revision**

## INSPECTION

14100160011

- Check for foreign material between radiator fins.
- Check the radiator fins for bend or damage.
- Check the radiator for corrosion, damage, rust or scaling.
- Check the radiator hoses for cracks, damage or deterioration.
- Check the reserve tank for damage.
- Check the spring of radiator cap for deterioration.
- Check the packing of radiator cap for damage or cracks.

# COOLING FAN

14100210013

## REMOVAL AND INSTALLATION

<3.0L-12 VALVE engine>

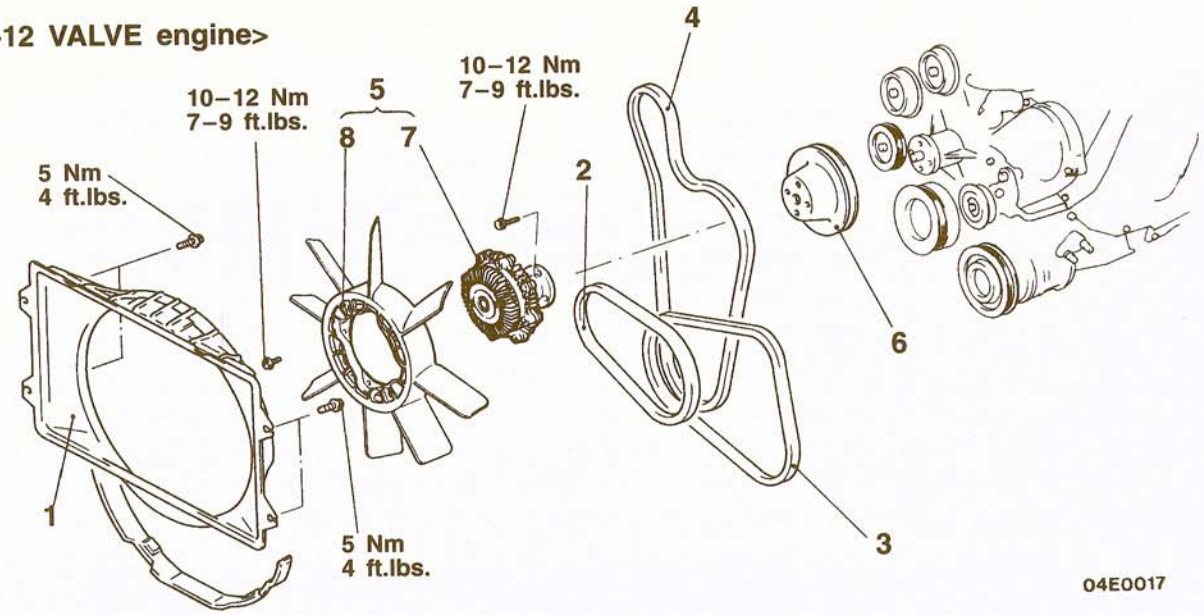


04E0017

<3.0L-24 VALVE engine, 3.5L engine>

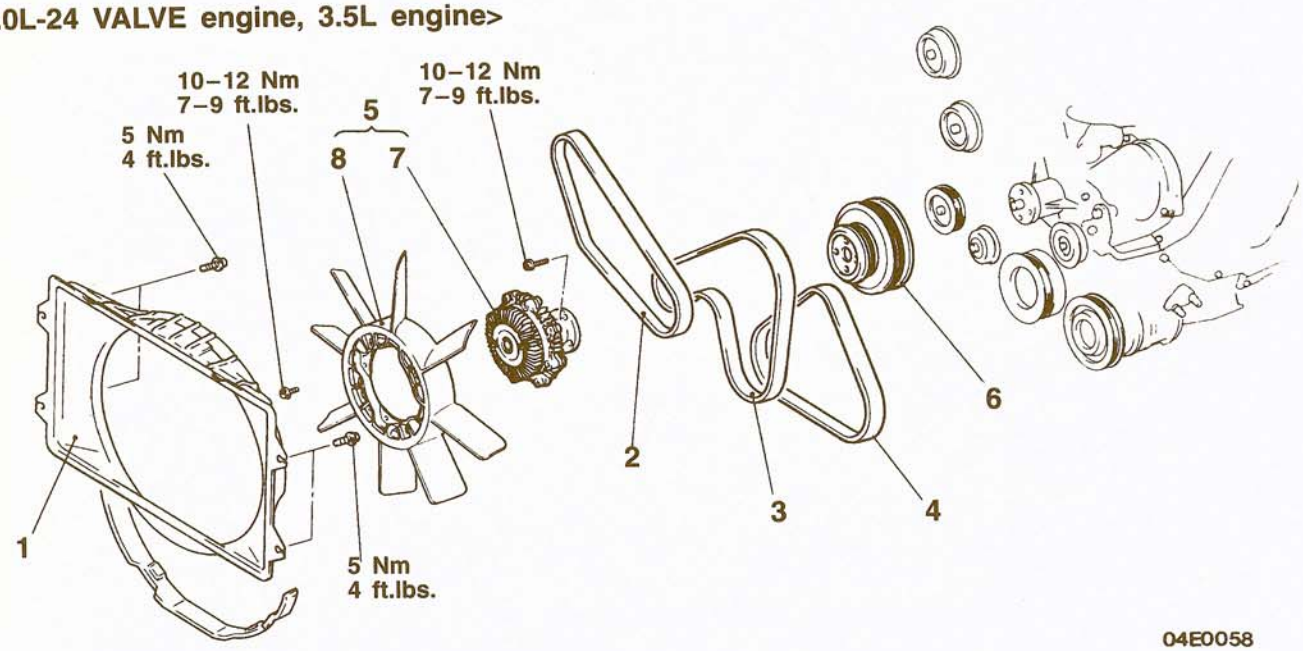


04E0058
00002064

**Removal steps <3.0L-12 VALVE engine>**

1. Shroud
2. Drive belt (Power steering)
3. Drive belt (Air conditioning)
4. Drive belt (Generator)
5. Cooling fan and fan clutch assembly
6. Pulley
7. Fan clutch
8. Cooling fan

**Removal steps <3.0L-24 VALVE engine, 3.5L engine>**

1. Shroud
2. Drive belt (Power steering)
3. Drive belt (Generator)
4. Drive belt (Air conditioning)
5. Cooling fan and fan clutch assembly
6. Pulley
7. Fan clutch
8. Cooling fan

TSB Revision

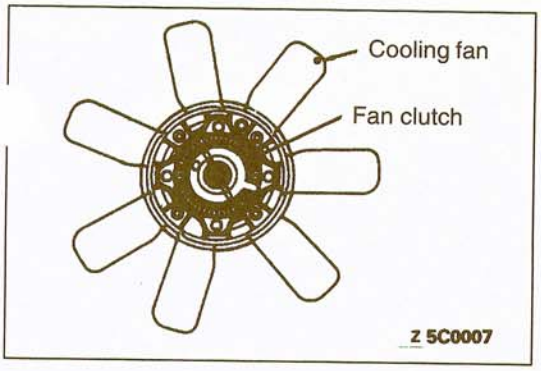


## INSPECTION

14100220016

### COOLING FAN Cooling

- Check the blades for damage and cracks.
- Check for cracks or damage around the bolt holes in the fan hub.
- If any portion of fan is damaged or cracked, replace cooling fan.

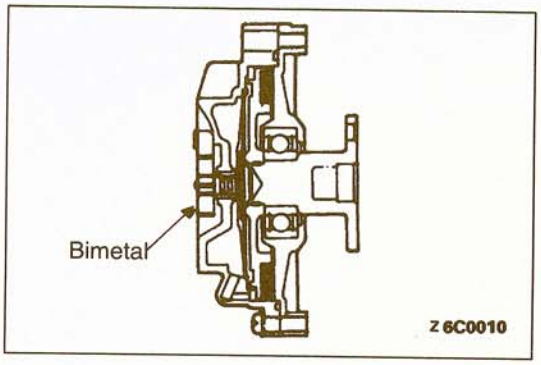


### FAN CLUTCH

- Check that the fluid in the fan clutch is not leaking at the case joints and seals. If the fluid quantity decreases due to leakage, the fan speed will decrease and engine overheating might result.
- When a fan attached to an engine is turned by hand, it should give a sense of some resistance. If fan turns lightly, it is faulty.
- Check bimetal strip for damage.

# THERMOSTAT <3.0L-12 VALVE engine>

14100240067

## REMOVAL AND INSTALLATION

**Pre-removal and Post-installation Operation**
- Engine Coolant Draining and Supplying

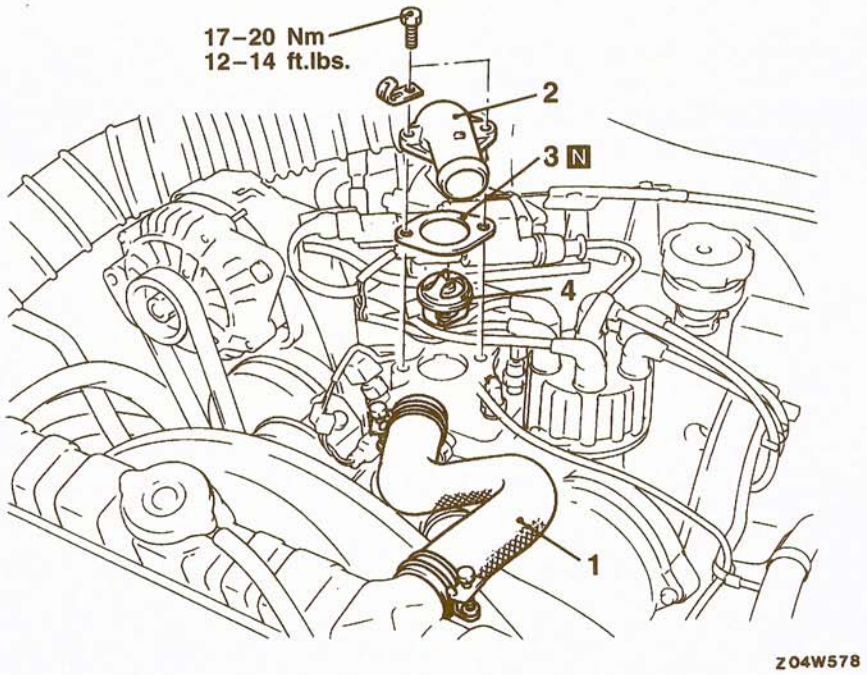


**Removal steps**
1. Radiator upper hose connection
2. Water outlet fitting
3. Water outlet fitting gasket
▶A◀ 4. Thermostat

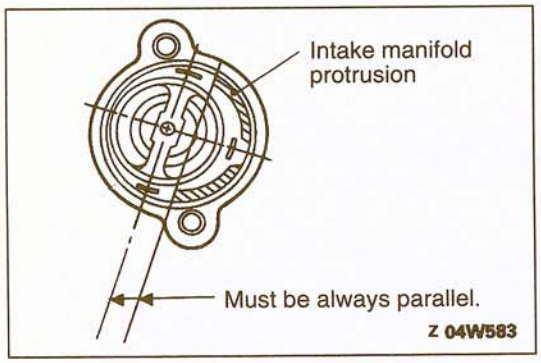


## INSTALLATION SERVICE POINT

### ▶A◀ THERMOSTAT INSTALLATION

Install the thermostat to the intake manifold as illustrated.

**Caution**
**The thermostat flange fits over the manifold seat; ensure that the thermostat is not installed at an angle.**

TSB Revision

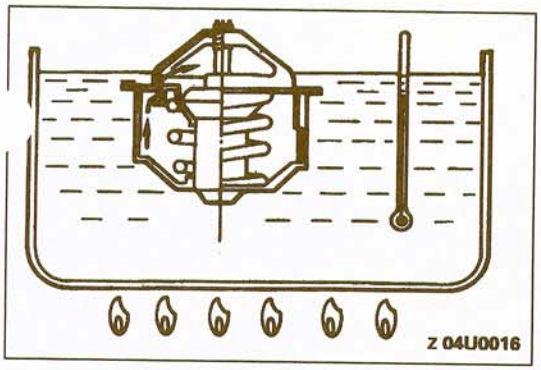


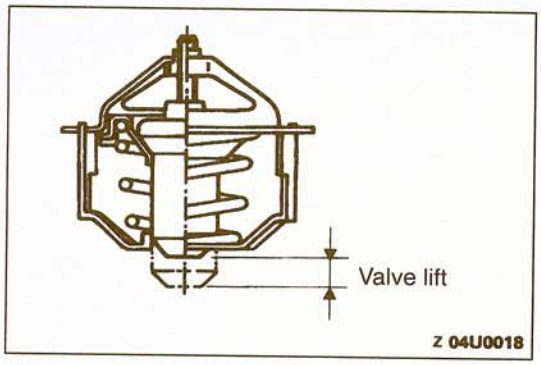


## INSPECTION

14100250084

- Check that the valve closes tightly at room temperature.
- Check for defects or damage.
- Check for rust or encrustation on the valve, and remove if any.
- Immerse the thermostat in container of water. Stir to raise water temperature and check that the thermostat valve opening temperature and the temperature with valve fully open [valve lift-over 8 mm (.31 in.)] are at the standard values.

**Standard value:**
**Valve opening temperature 88°C (190°F)**
**Fully open 100°C (212°F)**

NOTE
Measure valve height when fully closed. Calculate lift by measuring the height when fully open.

# THERMOSTAT<3.0L-24 VALVE engine, 3.5L engine>

14100240074

## REMOVAL AND INSTALLATION

**Pre-removal and Post-installation Operation**
- Engine Coolant Draining and Supplying

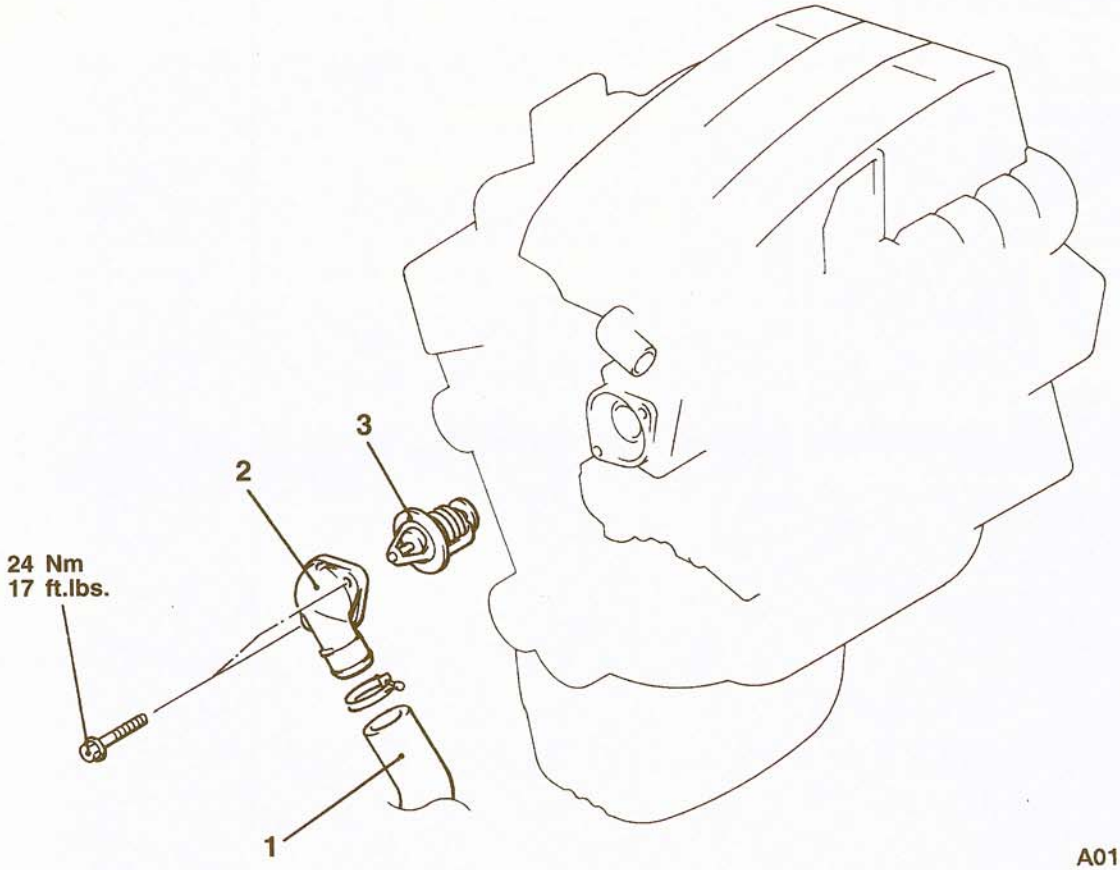


A01E0110

**Removal steps**
1. Radiator lower hose connection
2. Water inlet fitting
▶A◀ 3. Thermostat

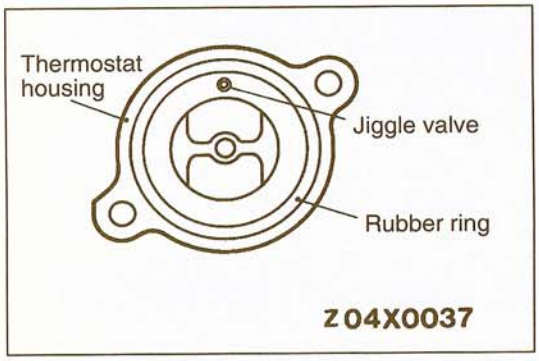


Z04X0037

## INSTALLATION SERVICE POINT

### ▶A◀ THERMOSTAT INSTALLATION

Install the thermostat so that the jiggle valve is facing straight up.

**Caution**
**Make absolutely sure that no oil is adhering to the rubber ring of the thermostat. In addition, be careful not to fold over or scratch the rubber ring when inserting.**

**TSB Revision**

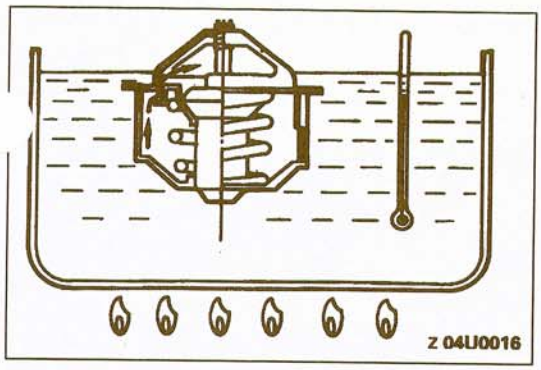


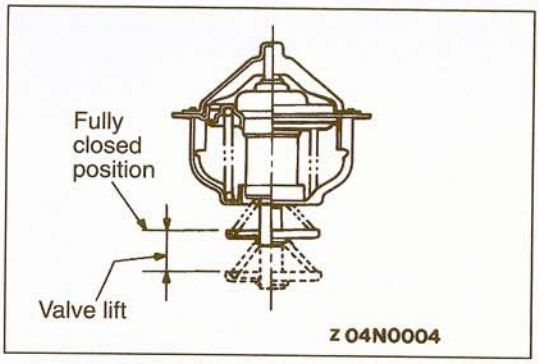


## INSPECTION

14100250091

- Check that valve closes tightly at room temperature.
- Check for defects or damage.
- Check for rust or encrustation on valve. Remove if any.
- Immerse thermostat in container of water. Stir to raise water temperature and check that thermostat valve opening temperature and the temperature with valve fully open [valve lift-over 8 mm (.31 in.)] are at the standard value.

**Standard value:**
**Valve opening temperature 82°C (180°F)**
**Fully open 95°C (203°F)**

NOTE
Measure valve height when fully closed. Calculate lift by measuring the height when fully open.

# WATER PUMP

14100270134

## REMOVAL AND INSTALLATION

**Pre-removal and Post-installation Operation**
- Engine Coolant Draining and Supplying
- Timing Belt Removal and Installation
  <3.0L-12 VALVE ENGINE: Refer to GROUP 11A – Timing Belt.>
  <3.0L-24 VALVE ENGINE: Refer to GROUP 11A – Timing Belt.>
  <3.5L ENGINE: Refer to GROUP 11C – Timing Belt.>

**<3.0L-12 VALVE engine>**

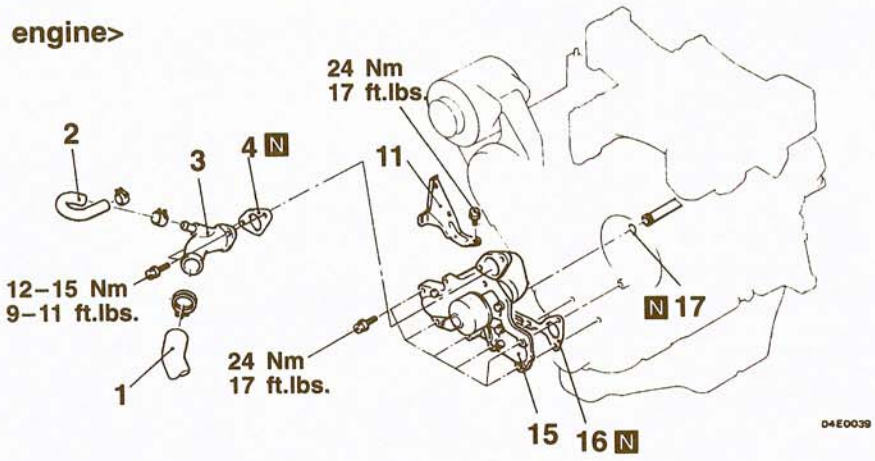


**<3.0L-24 VALVE engine>**

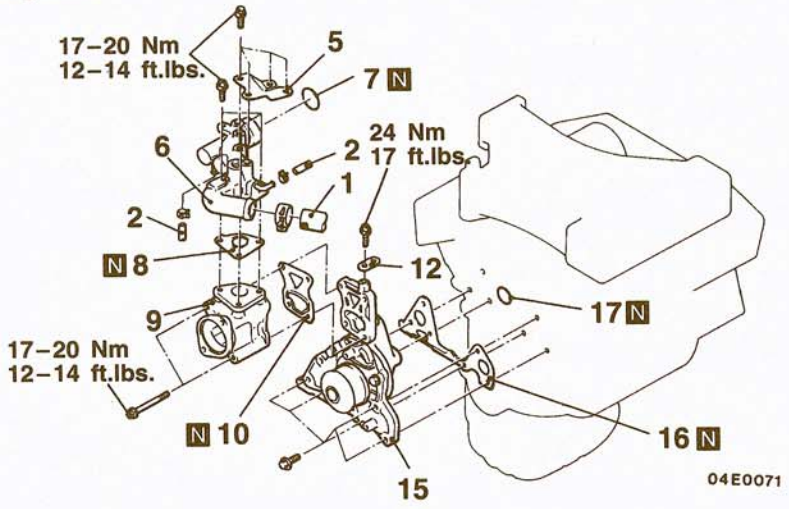


00002065

**Removal steps**
**<3.0L-12 VALVE engine>**
1. Radiator hose
2. Water hose
3. Water inlet fitting
4. Water inlet fitting gasket
11. Tensioner bracket stay
15. Water pump
16. Water pump gasket
▶A◀ 17. O-ring

**Removal steps**
**<3.0L-24 VALVE engine>**
- Thermostat (Refer to P.14-12.)

1. Radiator hose
2. Water hose
5. Water outlet fitting bracket
6. Water outlet fitting
▶A◀ 7. O-ring
8. Gasket
9. Thermostat case
10. Gasket
12. Water pump bracket
15. Water pump
16. Water pump gasket
▶A◀ 17. O-ring

**TSB Revision**

**<3.5L engine>**

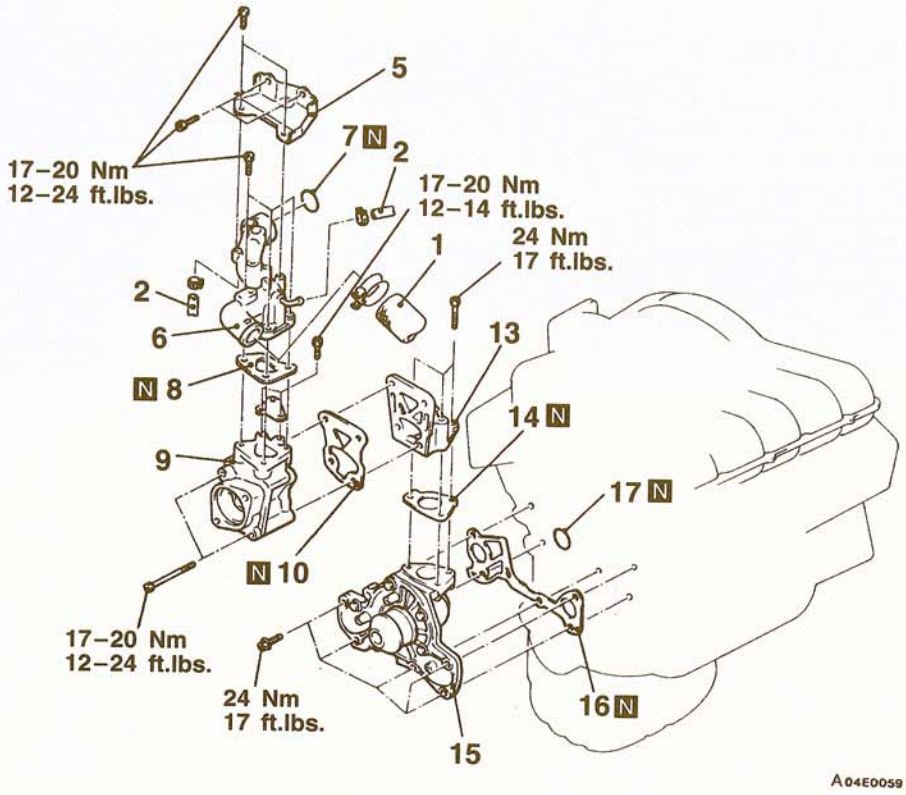


**Removal steps <3.5L engine>**

- Thermostat (Refer to P.14-12.)
1. Radiator hose
2. Water hose
5. Water outlet fitting bracket
6. Water outlet fitting
▶A◀ 7. O-ring
8. Gasket
9. Thermostat case
10. Gasket
13. Water pump fitting
14. Water pump fitting gasket
15. Water pump
16. Water pump gasket
▶A◀ 17. O-ring

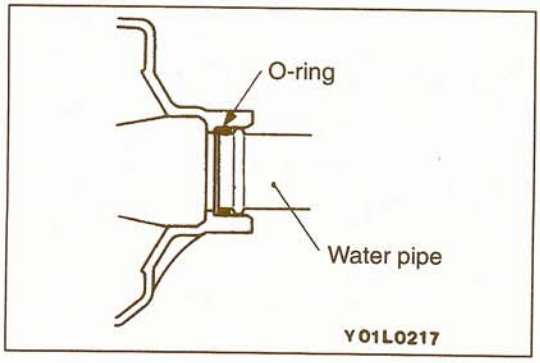


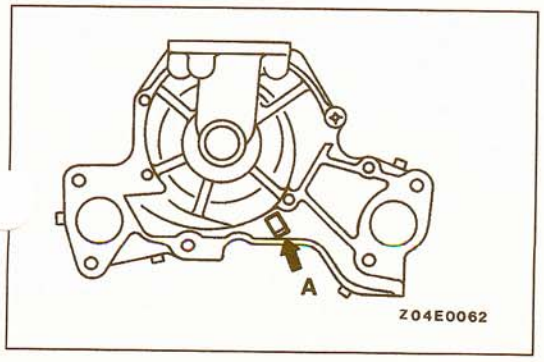


## INSTALLATION SERVICE POINT

### ▶A◀ O-RING INSTALLATION

Rinse the mounting location of the O-ring and water pipe with water, and install the O-ring and water pipe.

**Caution**

1. **Do not apply oil and grease to water pipe O-ring.**
2. **Keep the water pipe connections free of sand, dust, etc.**
3. **Insert water pipe until its end bottoms.**

## INSPECTION

14100280021

### WATER PUMP

- Check each part for cracks, damage or wear, and replace the water pump assembly if necessary.
- Check the bearing for damage, abnormal noise and sluggish rotation, and replace the water pump assembly if necessary.
- Check the seal unit for leaks, and replace the water pump assembly if necessary.
- Check for water leakage if water leaks from hole "A" seal unit is faulty. Replace as an assembly.

TSB Revision 97-14-001

# THERMO SWITCH <A/T>, ENGINE COOLANT TEMPERATURE GAGE UNIT AND ENGINE COOLANT TEMPERATURE SENSOR

14100470015

## REMOVAL AND INSTALLATION

**Pre-removal and Post-installation Operation**
- Engine Coolant Draining and Supplying

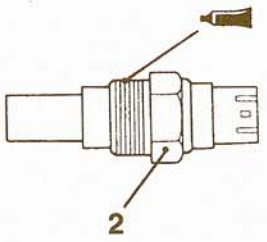


20A0198

**Sealant:**
**3M Nut Locking Part No. 4171 or equivalent**

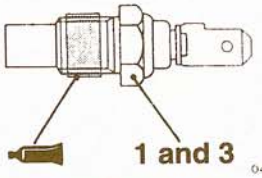


04D0006

**Sealant:**
**3M ATD Part No. 8660 or equivalent**

<3.0L-12 VALVE engine>

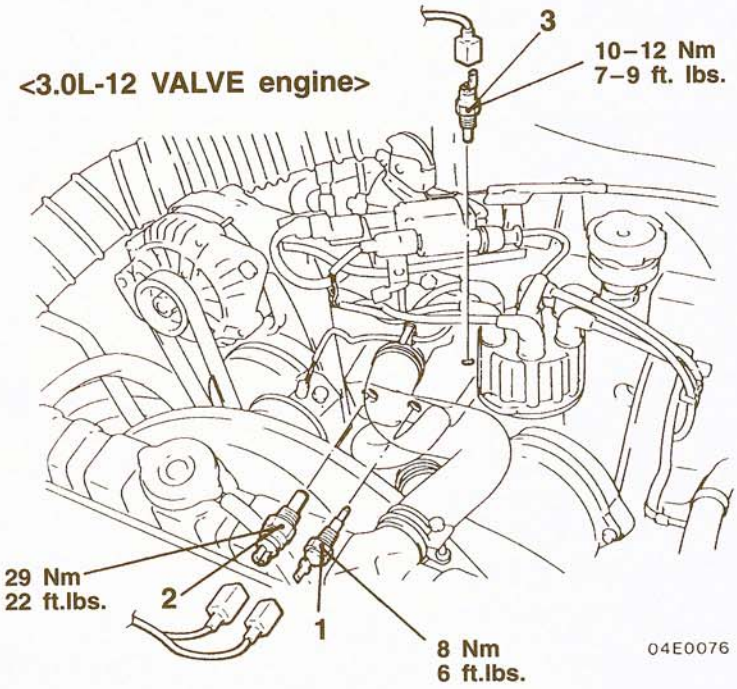


04E0076

<3.0L-24 VALVE engine>

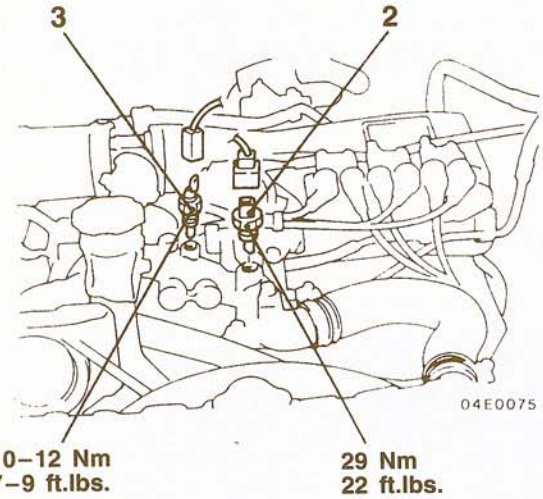


04E0075

<3.5L engine>

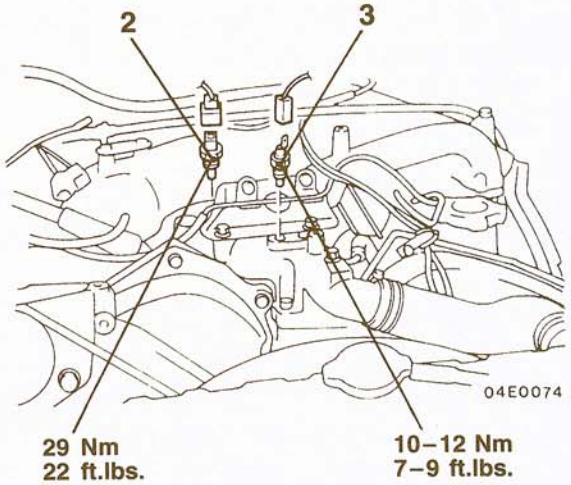


04E0074

00004221

1. Thermo switch <A/T>
2. Engine coolant temperature sensor
3. Engine coolant temperature gauge unit

**TSB Revision**

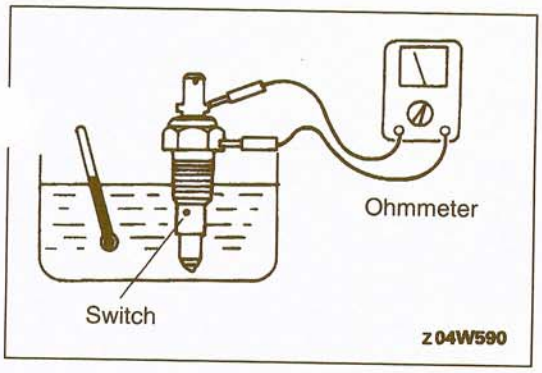


## INSPECTION

14100480018

### THERMO SWITCH <A/T>

Raise the water temperature and check the continuity when it reaches the specified temperature.

**Standard value:**

**<3.0L-12 VALVE engine>**

**50°C (122°F) or more: Continuity**

**50°C (122°F) dimmer: No continuity**

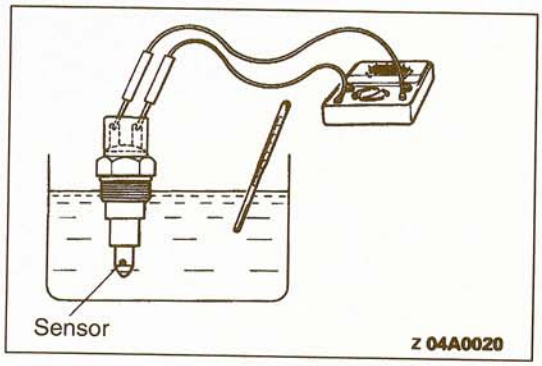


### ENGINE COOLANT TEMPERATURE SENSOR

Raise the water temperature and measure the resistance if within the standard value.

**Standard value:**

**2.37±0.24 kΩ [at 20°C (68°F)]**

**290±32 Ω [at 80°C (176°F)]**

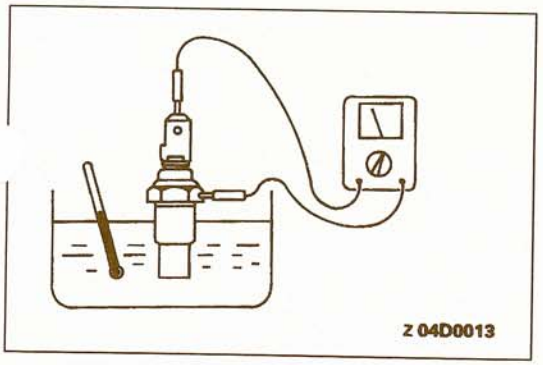


### ENGINE COOLANT TEMPERATURE GAGE UNIT

Immerse the gage unit in hot water at 70°C (158°F) and measure the resistance value with an ohmmeter.

**Standard value:**

**104±13.5 Ω [at 70°C (158°F)]**

NOTES

# INTAKE AND EXHAUST

## CONTENTS

15109000069


EXHAUST MANIFOLD <3.0L-12 VALVE engine> ..... 12

EXHAUST MANIFOLD <3.0L-24 VALVE engine> ..... 14

EXHAUST MANIFOLD <3.5L engine> ..... 15

EXHAUST PIPE, MUFFLER AND CATALYTIC CONVERTER <3.0L-12 VALVE engine, 3.0L-24 VALVE engine for Federal> ..... 17

EXHAUST PIPE, MUFFLER AND CATALYTIC CONVERTER <3.0L-24 VALVE engine for California> ..... 18

EXHAUST PIPE, MUFFLER AND CATALYTIC CONVERTER <3.5L engine> ... 19

GENERAL SPECIFICATIONS ..... 2

INTAKE MANIFOLD ..... 9

INTAKE MANIFOLD PLENUM ..... 5

ON-VEHICLE SERVICE ..... 2

- Intake Manifold Vacuum Check ..... 2
- Variable Induction System Check ..... 3

SERVICE SPECIFICATIONS ..... 2

TROUBLESHOOTING ..... 2

## GENERAL SPECIFICATIONS

15100020019

| Items | | Specifications |
|---|---|---|
| Air filter | Type | Dry type |
| | Element | Unwoven cloth type |
| Exhaust system | Front exhaust pipe | Dual type |
| | Muffler | Expansion resonance type |
| | Coupling | Spherical coupling and flat coupling |
| | Suspension system | Rubber hangers and rubber suspenders |

## SERVICE SPECIFICATIONS

15100030050

| Items | | Standard value | Limit |
|---|---|---|---|
| Intake and exhaust manifolds | Distortion of cylinder head contacting surface mm (in.) | Less than 0.15 (.0059) | 0.3 (.012) |

## TROUBLESHOOTING

15100070038

| Trouble Symptom | Probable Cause | Remedy |
|---|---|---|
| Exhaust gas leakage | Loose joints | Re-tighten |
| | Broken pipe or muffler | Repair or replace |
| Abnormal noise | Broken separator in muffler | Replace |
| | Broken rubber hangers or suspender | Replace |
| | Interference of pipe or muffler with vehicle body | Correct |
| | Broken pipe or muffler | Repair or replace |

## ON-VEHICLE SERVICE

15100180052

### INTAKE MANIFOLD VACUUM CHECK

3.0L-12 VALVE Engine: Refer to GROUP 11A – On-vehicle Service.
3.0L-24 VALVE Engine: Refer to GORUP 11A – On-vehicl Service.
3.5L Engine: Refer to GROUP 11C – On-vehicle Service.

**TSB Revision**

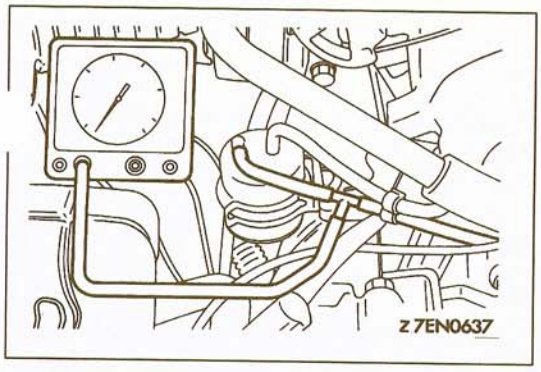


## VARIABLE INDUCTION SYSTEM CHECK

15100170028

**<3.5L Engine>**

(1) Warm up the engine.
(2) Connect a tachometer.
(3) Connect a vacuum gage, via a T-joint, between the variable induction control solenoid and the variable induction control vacuum actuator.
(4) Start the engine, and check to be sure that negative pressure is applied to the vacuum gage according to the items in the table below.

| Engine speed | Normal Condition | Control Valve |
|---|---|---|
| 3,200 r/min or less | Negative pressure is maintained | Closed |
| From 3,200 r/min or less, engine is suddenly raced | Negative pressure does not change | Closed |
| 3,400 r/min or more | Negative pressure leaks | Open |

(5) Check to be sure that the rod of the variable induction control vacuum actuator moves during inspection.

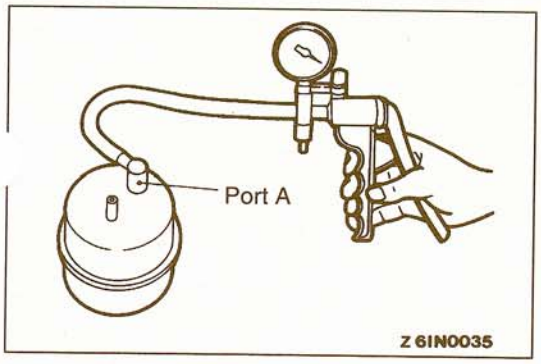


### VACUUM TANK CHECK

(1) Install a hand vacuum pump to port A and check to be sure that air-tightness is maintained when 67 kPa (20 in.Hg) of negative pressure is applied.
After checking, remove the hand vacuum pump.

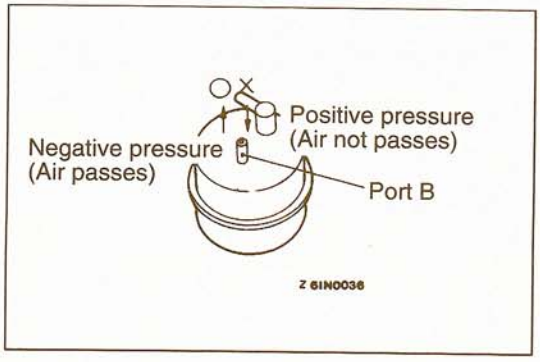


(2) Check to be sure that air passes through when negative pressure is applied to port B, and that air does not pass through when positive pressure is applied to port B.

### VARIABLE INDUCTION CONTROL SOLENOID CHECK

(1) OPERATION CHECK
Apply negative pressure to the vacuum tank side nipple (connected to the white vacuum hose) of the variable induction control solenoid with a hand vacuum pump, and check the air-tightness when voltage is applied to and removed from the variable induction control solenoid terminals.

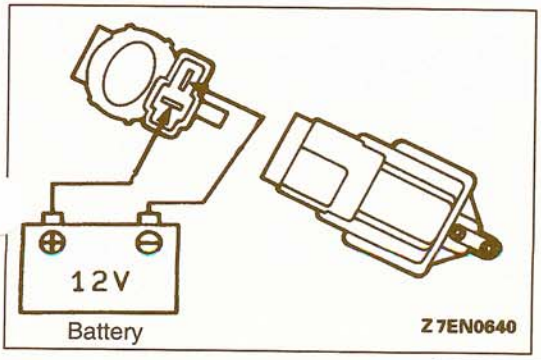


| Battery Positive Voltage | Other Nipple of Variable Induction Control Solenoid | Normal Condition |
|---|---|---|
| When applied | Open | Negative pressure leaks |
| | Covered with a finger | Negative pressure is maintained |
| When not applied | Open | Negative pressure is maintained |

TSB Revision

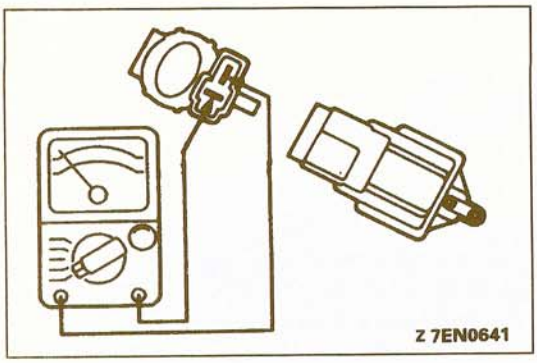


(2) COIL CONTINUITY CHECK
Use a circuit tester to measure the resistance of the coil.

**Standard value: 36–44 Ω [At 20°C (68°F)]**

# INTAKE MANIFOLD PLENUM

15100270018

## REMOVAL AND INSTALLATION

**Post-installation Operation**
- Accelerator Cable Adjustment
  (Refer to GROUP 17 – On-vehicle Service.)
- Throttle Cable Adjustment <A/T>
  (Refer to GROUP 23A – On-vehicle Service.)

**<3.0L-12 VALVE engine>**

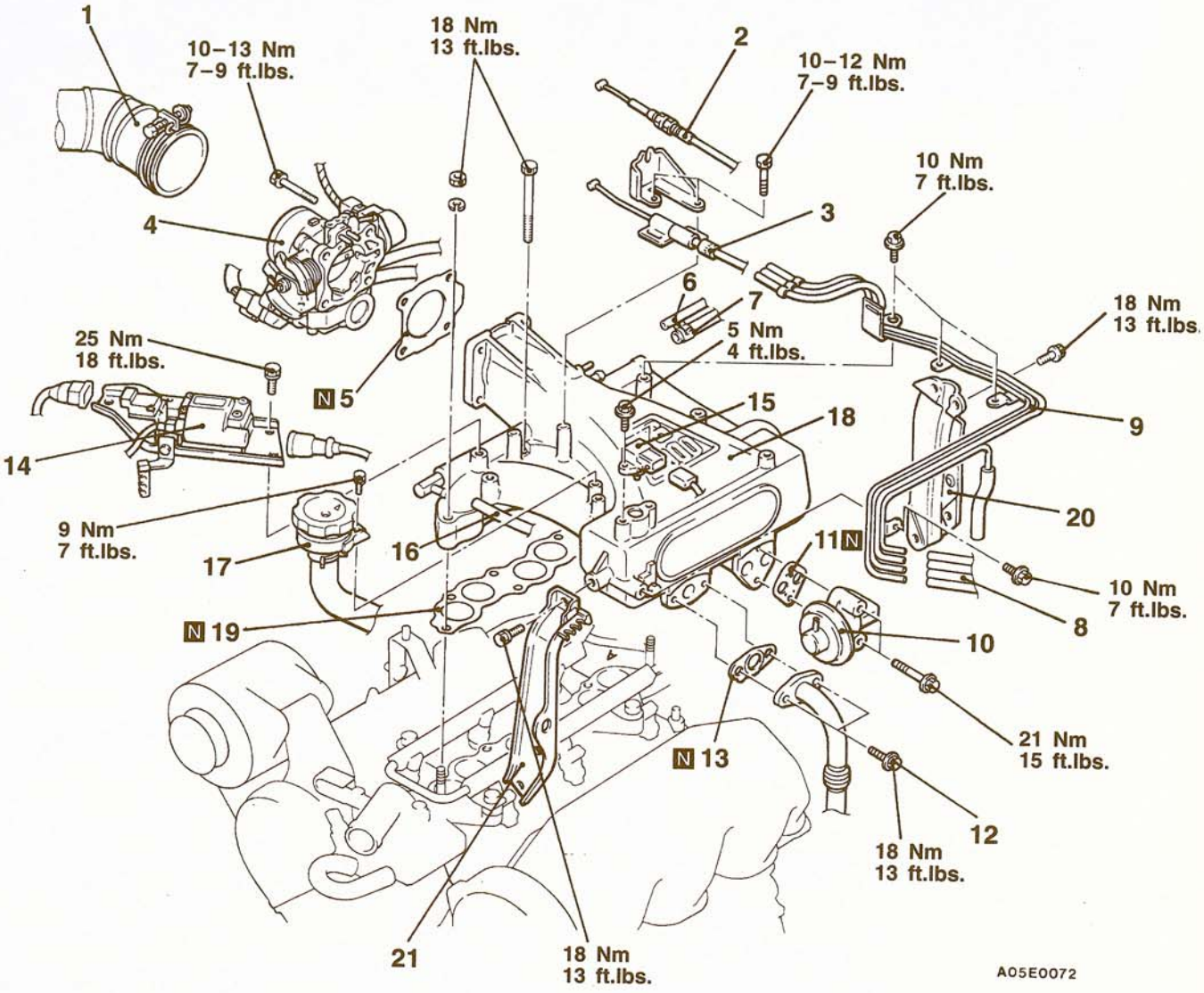


**Removal steps**

1. Air intake hose connection
2. Throttle cable connection <A/T>
3. Accelerator cable connection

◀A▶

4. Throttle body assembly
5. Throttle body gasket
6. Vacuum hose connection
7. Brake booster vacuum hose connection
8. Vacuum hose connection
9. Vacuum pipe assembly
10. EGR valve
11. EGR gasket
12. EGR pipe attaching bolt

▶A◀

13. EGR pipe gasket
14. Ignition coil
15. Manifold differential pressure sensor
16. PCV hose connection
17. Engine oil filler tube bracket
18. Intake manifold plenum
19. Intake manifold plenum gasket
20. Intake manifold plenum rear stay
21. Intake manifold plenum front stay

**TSB Revision**

**<3.0L-24 VALVE engine>**

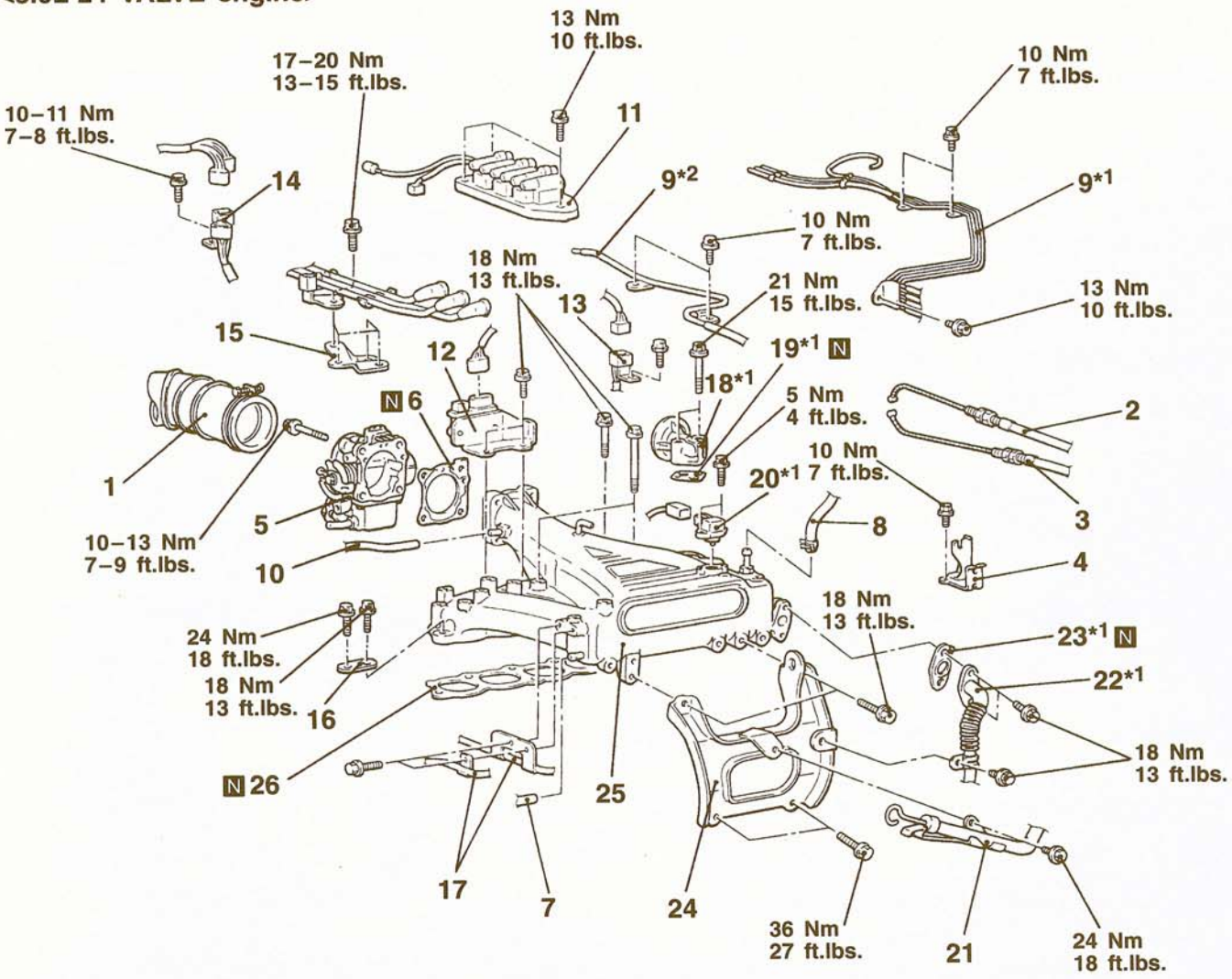


A05E0075

**Removal steps**

1. Air intake hose connection
2. Throttle cable connection <A/T>
3. Accelerator cable connection
4. Accelerator cable bracket
◀A▶ 5. Throttle body assembly
6. Throttle body gasket
7. PCV hose connection
8. Brake booster vacuum hose connection
9. Vacuum hose connection
10. Vacuum hose connection
11. Ignition coil
12. Power transistor
13. Injector connector
14. Crank angle sensor and cam position sensor connector
15. Water outlet fitting bracket
16. Water pump stay
17. Fuel pipe connection
18. EGR valve
19. EGR valve gasket
20. Manifold differential pressure sensor
21. Oil level gauge connection
22. EGR pipe connection
23. EGR pipe gasket
24. Intake manifold plenum stay
25. Intake manifold plenum
▶B◀ 26. Intake manifold plenum gasket

NOTE
(1) *1: Vehicles for federal
(2) *2: Vehicles for california

**TSB Revision**

<3.5L engine>

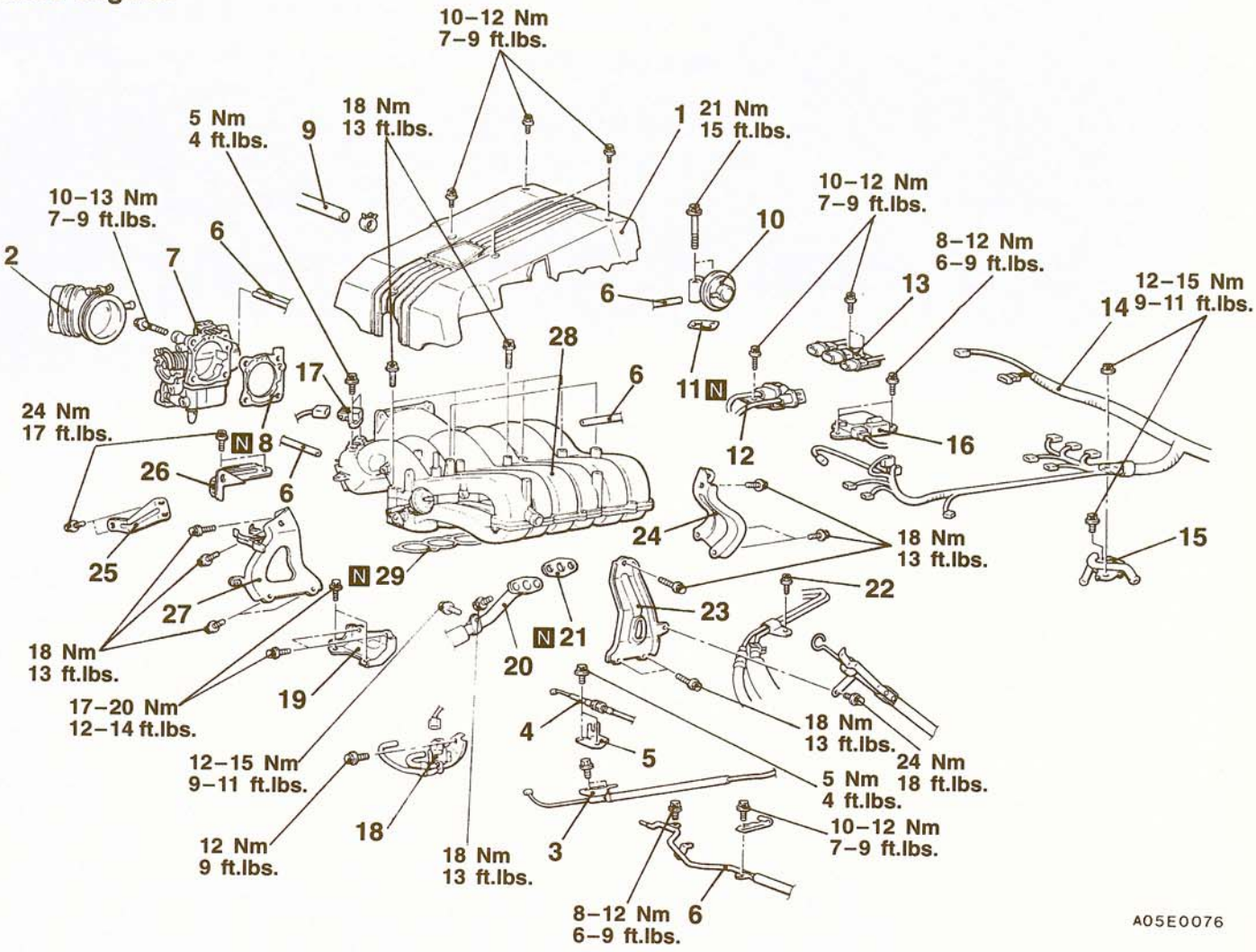


**Removal steps**

1. Intake manifold plenum cover
2. Air intake hose
3. Accelerator cable connection
4. Throttle cable connection
5. Throttle cable bracket
6. Vacuum hose connection
◀A▶ 7. Throttle body assembly
8. Throttle body gasket
9. Brake booster vacuum hose connection
10. EGR valve
11. EGR valve gasket
12. Connector bracket A
13. Connector bracket B
14. Engine control harness
15. Fuel protector
16. Power transistor
17. Manifold differential pressure sensor
18. Solenoid valve assembly
19. Water outlet fitting bracket
20. EGR pipe
▶D◀ 21. EGR pipe gasket
22. Fuel hose clamp mounting bolt
23. Intake manifold plenum stay (LH)
24. Intake manifold plenum stay (rear)
25. Power steering pump stay
26. Accessory mount stay
27. Intake manifold plenum stay (RH)
28. Intake manifold plenum
▶C◀ 29. Intake manifold plenum gasket

## REMOVAL SERVICE POINT

### ◀A▶ THROTTLE BODY ASSEMBLY REMOVAL

Leave the water hoses attached to the throttle body assemb'

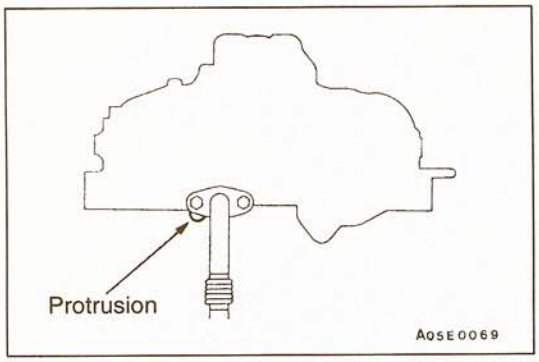


## INSTALLATION SERVICE POINTS

### ▶A◀ EGR PIPE GASKET INSTALLATION

Install with gasket protrusion in the position illustrated.

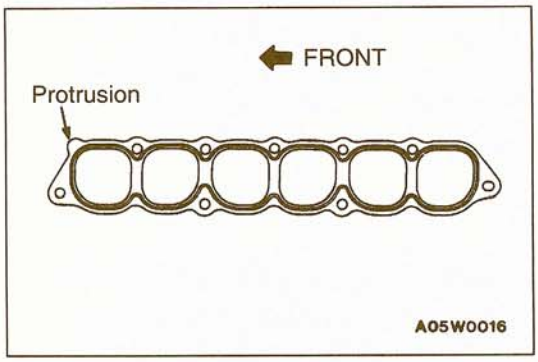


### ▶B◀ INTAKE MANIFOLD PLENUM GASKET INSTALLATION

Install with gasket protrusion in the position illustrated.

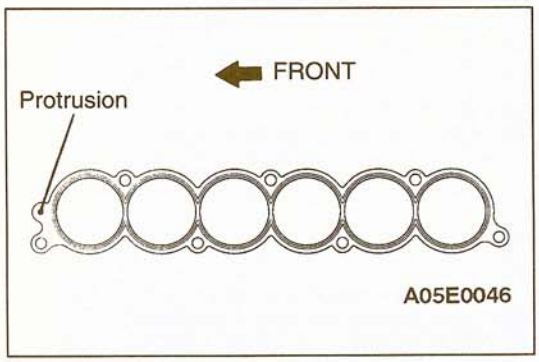


### ▶C◀ INTAKE MANIFOLD PLENUM GASKET INSTALLATION

Install with gasket protrusion in the position illustrated.

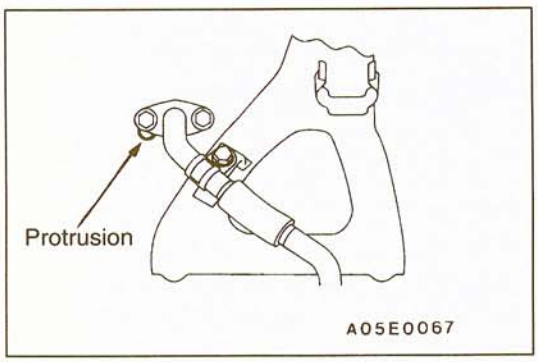


### ▶D◀ EGR PIPE GASKET INSTALLATION

Install with gasket protrusion in the position illustrated.

## INSPECTION

15100280011

Check the intake manifold plenum for damage and cracks and replace it if any defects are found.

TSB Revision

# INTAKE MANIFOLD

15100300113

## REMOVAL AND INSTALLATION

**Pre-removal Operation**
- Residual Pressure Release from High Pressure Hose (Refer to GROUP 13F – On-vehicle Service.)
- Engine Coolant Draining (Refer to GROUP 00 – Coolant Replacement.)
- Intake Manifold Plenum Removal (Refer to P.15-5.)

**Post-installation Operation**
- Intake Manifold Plenum Installation (Refer to P.15-5.)
- Engine Coolant Filling (Refer to GROUP 00 – Coolant Replacement.)
- Accelerator Cable Adjustment (Refer to GROUP 17 – On-vehicle Service.)
- Throttle Cable Adjustment (Refer to GROUP 23A – On-vehicle Service.)
- Fuel Leakage Checking

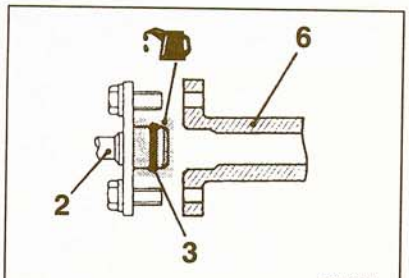


Oil

<3.0L-12 VALVE engine>




05E0073

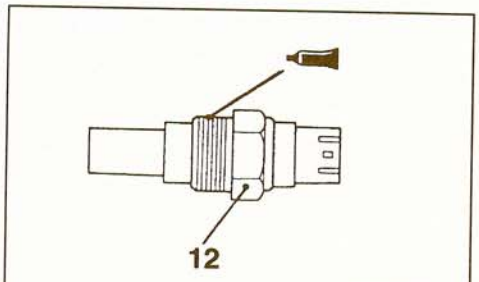


**Sealant:**
**3M Nut Locking Part No. 4171 or equivalent**

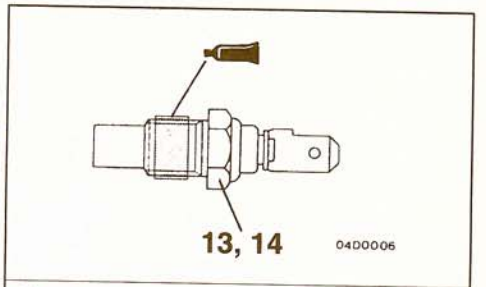


**Sealant:**
**3M ATD Part No. 8660 or equivalent**

00004234

**Removal steps**

1. Injector harness connection
2. High-pressure fuel hose connection
3. O-ring
4. Fuel return hose connection
5. Vacuum hose connection
6. Fuel rail (with injectors)
7. Radiator upper hose
8. Water by-pass hose connection
9. Water outlet fitting assembly
10. Gasket
11. Thermostat
12. Engine coolant temperature sensor
13. Thermo switch <A/T>
14. Engine coolant temperature gage unit
15. Intake manifold
16. Intake manifold gasket

**TSB Revision**

<3.0L-24 VALVE engine>

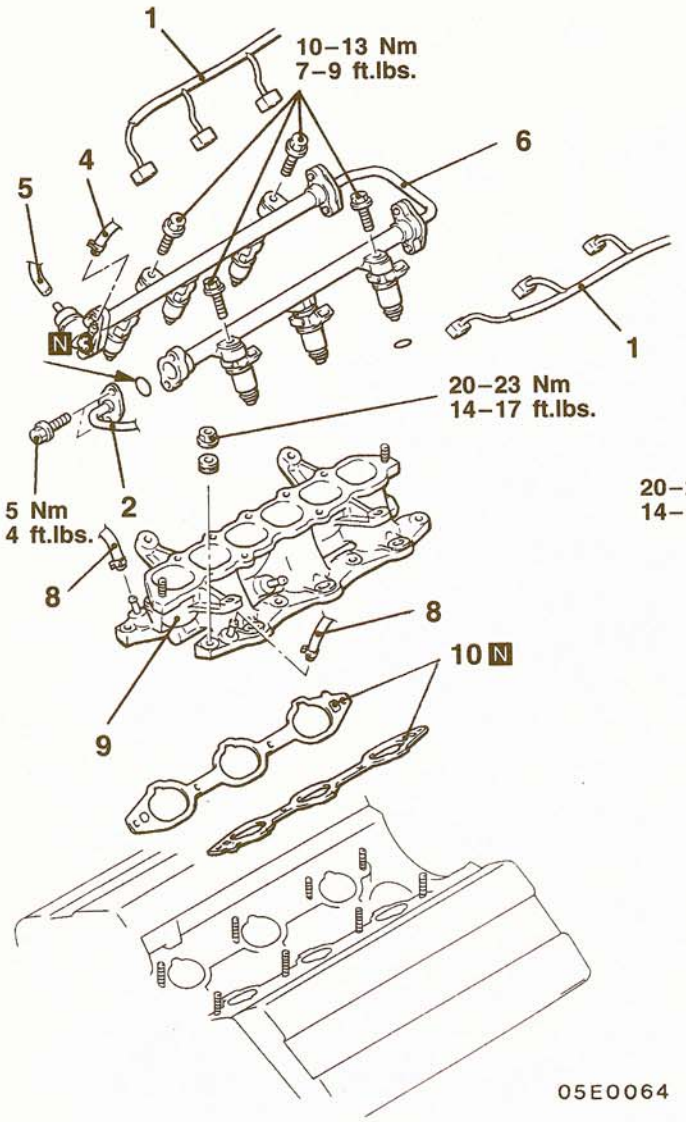


<3.5L engine>

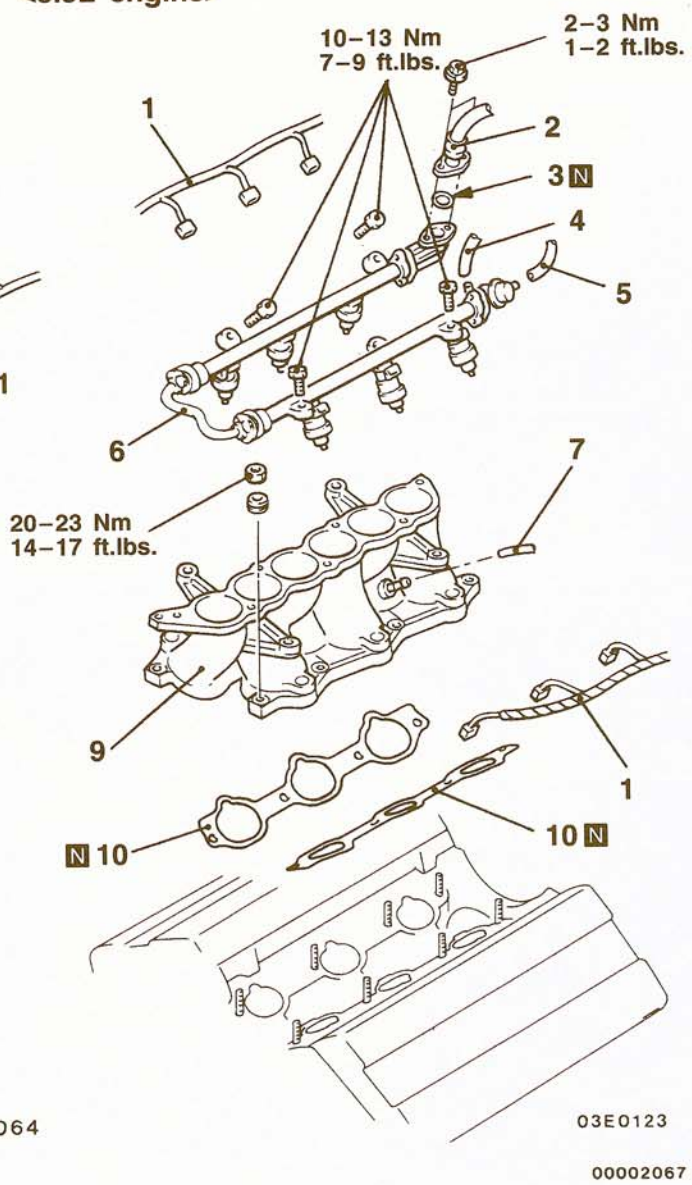


00002067

**Removal steps**

1. Injector harness connection
2. High-pressure fuel hose connection
3. O-ring
4. Fuel return hose connection
5. Vacuum hose connection
6. Fuel rail (with injectors)
7. Ventilation hose connection
8. Water hose connection

▶B◀ 9. Intake manifold

▶A◀ 10. Intake manifold gasket

TSB Revision

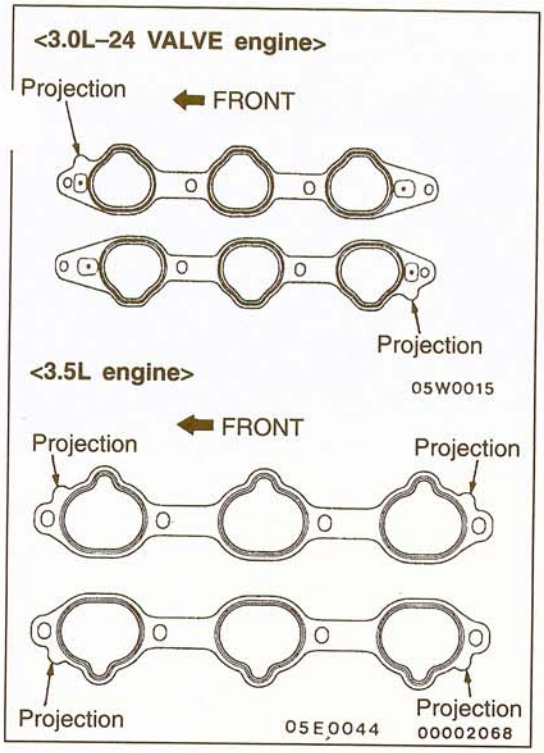


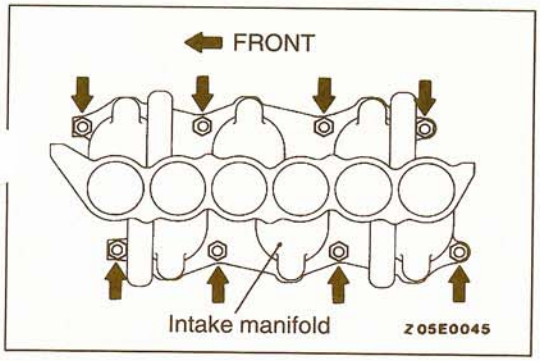


## INSTALLATION SERVICE POINTS

### ▶A◀ INTAKE MANIFOLD GASKET INSTALLATION

Install the gaskets so that the projections face in the directions shown in the illustration.

### ▶B◀ INTAKE MANIFOLD INSTALLATION

Tighten the intake manifold mounting nuts one bank after the other by the following procedure.

(1) Tighten the nuts in the right bank to 7 Nm (5 ft.lbs.).
(2) Tighten the nuts in the left bank to 20 to 23 Nm (14 to 17 ft.lbs.).
(3) Tighten the nuts in the right bank to 20 to 23 Nm (14 to 17 ft.lbs.).
(4) Repeat steps (2) and (3) one more time respectively.

## INSPECTION

15100310116

Check the following points; replace the part if a problem is found.

(1) Damage or cracking of any part.
(2) Clogging of the negative pressure (vacuum) outlet port, or clogging of the water or gas passages.

# EXHAUST MANIFOLD <3.0L-12 VALVE engine>

15100330105

## REMOVAL AND INSTALLATION

**Pre-removal and Post-installation Operation**
- Front Exhaust Pipe Removal and Installation (Refer to P.15-17.)

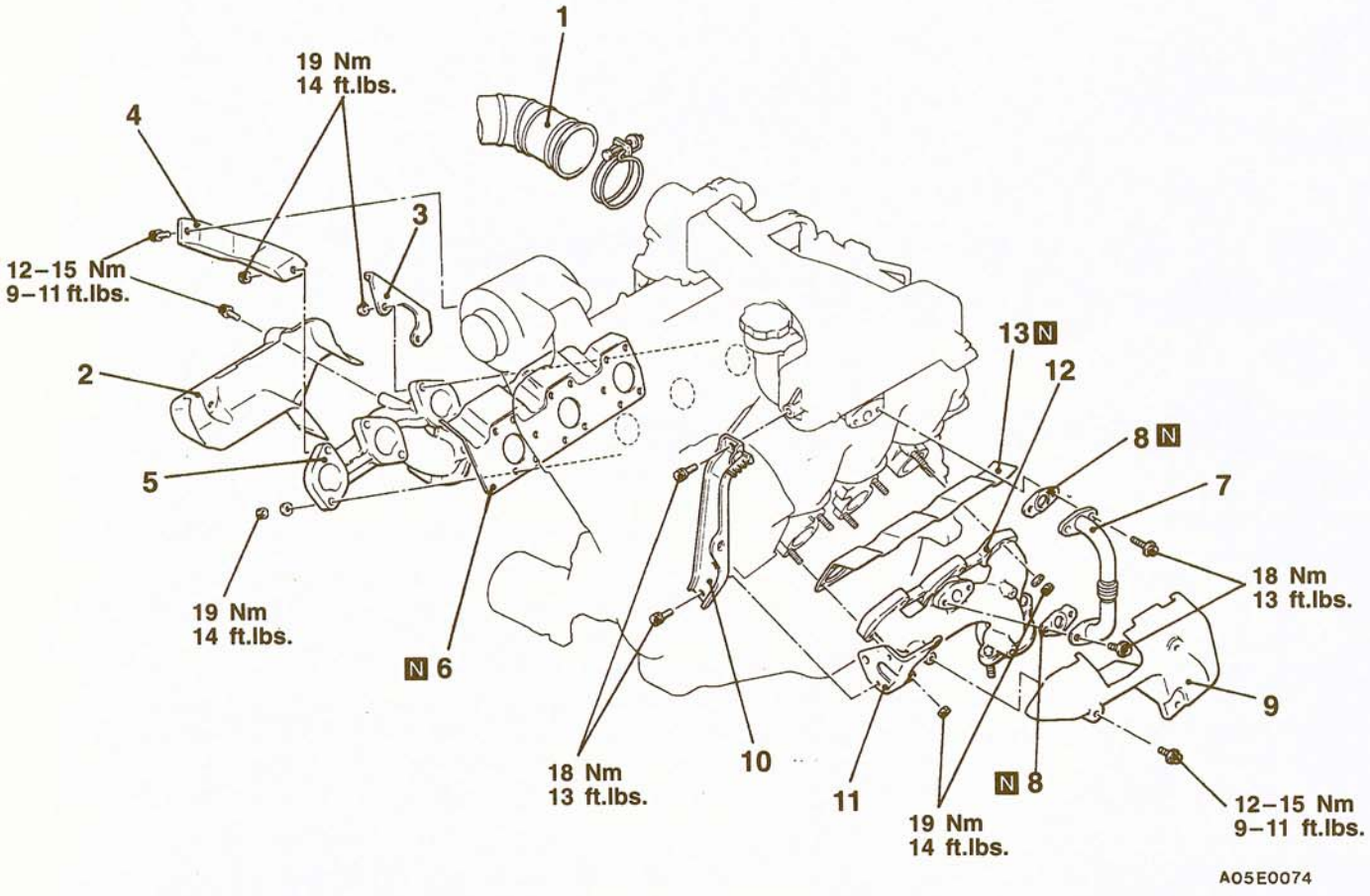


**Exhaust manifold removal steps (Right)**
1. Air duct
2. Heat protector
3. Engine hanger
4. Generator stay
5. Exhaust manifold
6. Exhaust manifols gasket

**Exhaust manifold removal steps (Left)**
7. EGR pipe
▶A◀ 8. Gasket
9. Heat protector
10. Air intake plenum stay (front)
11. Bracket
12. Exhaust manifold
13. Exhaust manifold gasket

**TSB Revision**

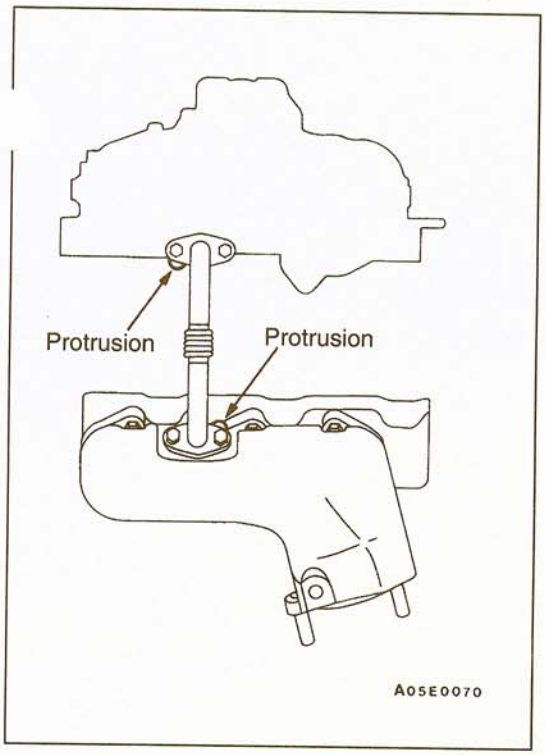


## INSTALLATION SERVICE POINT

### ▶A◀ GASKET INSTALLATION

Install with gasket protrusions in the position illustrated.

## INSPECTION

15100340023

### EXHAUST MANIFOLD

- Damage or cracking of any part.

# EXHAUST MANIFOLD <3.0L-24 VALVE engine>

15100330112

## REMOVAL AND INSTALLATION

**Pre-removal and Post-installation Operation**
- Front Exhaust Pipe Removal and Installation. <Vehicles for Federal> (Refer to P.15-17.)
- Warm up Three-way Catalytic Converter. <Vehicles for California> (Refer to P.15-18.)

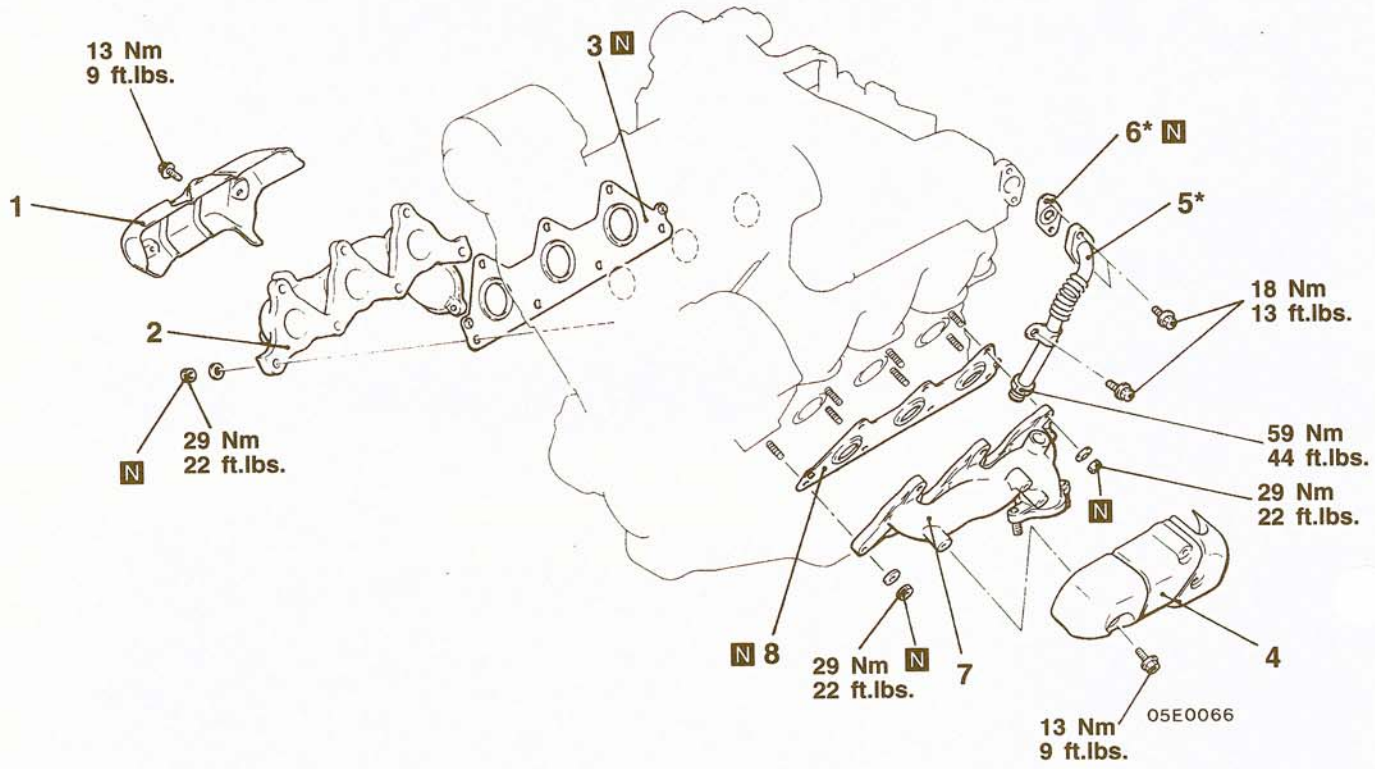


**Exhaust manifold removal steps (Right)**
- Air duct and air cleaner cover
1. Heat protector (R.H.)
2. Exhaust manifold (R.H.)
3. Gasket

**Exhaust manifold removal steps (Left)**
- Battery and battery tray
4. Heat protector (L.H.)
5. EGR pipe
6. Gasket
7. Exhaust manifold (L.H.)
8. Gasket

NOTE
*: Vehicles for federal.

## INSPECTION

15100340030

### EXHAUST MANIFOLD

- Damage or cracking of any part.

TSB Revision

# EXHAUST MANIFOLD <3.5L engine>

15100330129

## REMOVAL AND INSTALLATION

**Pre-removal and Post-installation Operation**
- Front Exhaust Pipe Removal and Installation (Refer to P.15-19.)

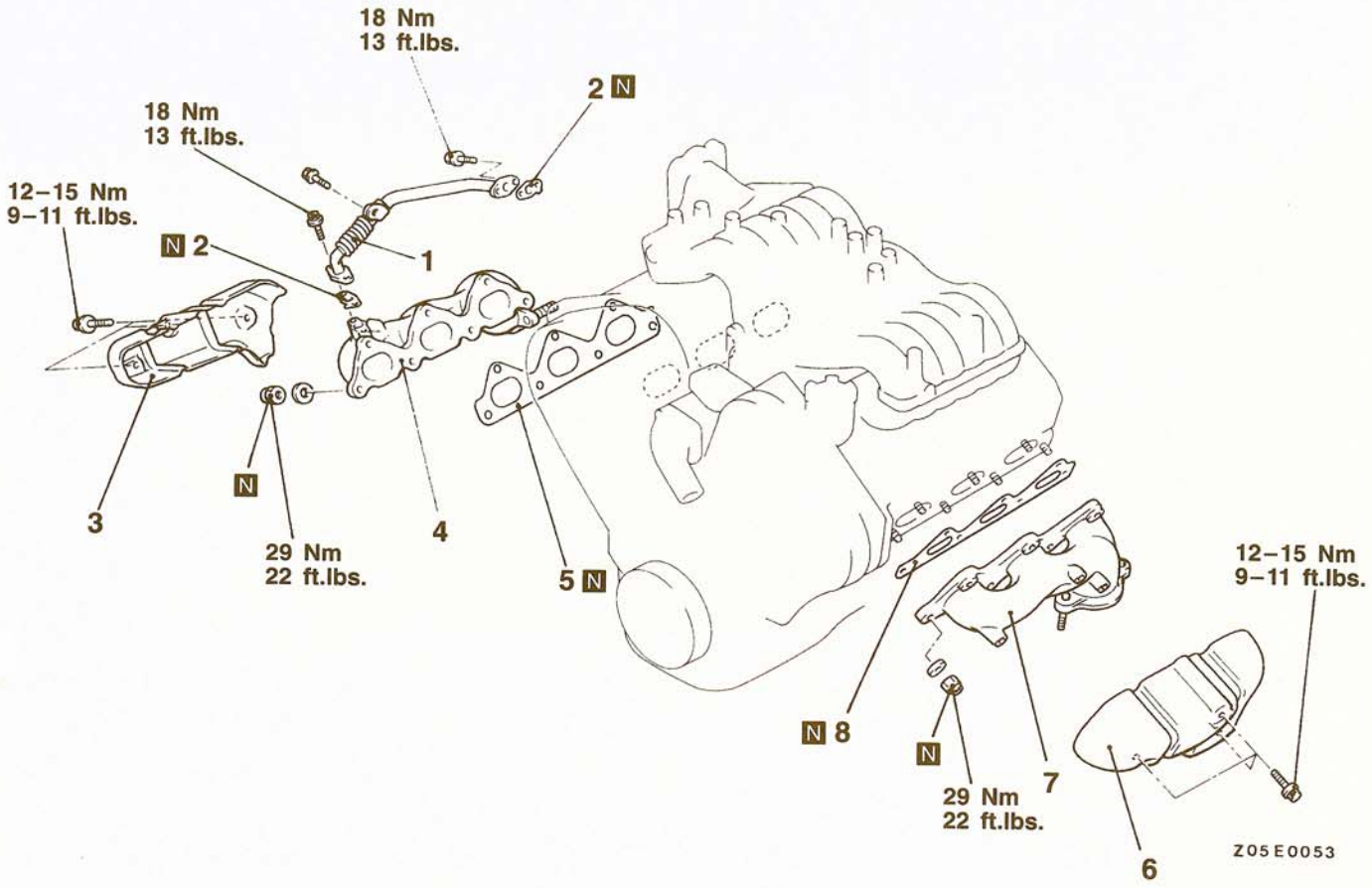


**Exhaust manifold removal steps (Right)**
- Air duct and air cleaner cover
1. EGR pipe
▶A◀ 2. Gasket
3. Heat protector (R.H.)
4. Exhaust manifold (R.H.)
5. Gasket

**Exhaust manifold removal steps (Left)**
- Battery and battery tray
6. Heat protector (L.H.)
7. Exhaust manifold (L.H.)
8. Gasket

TSB Revision

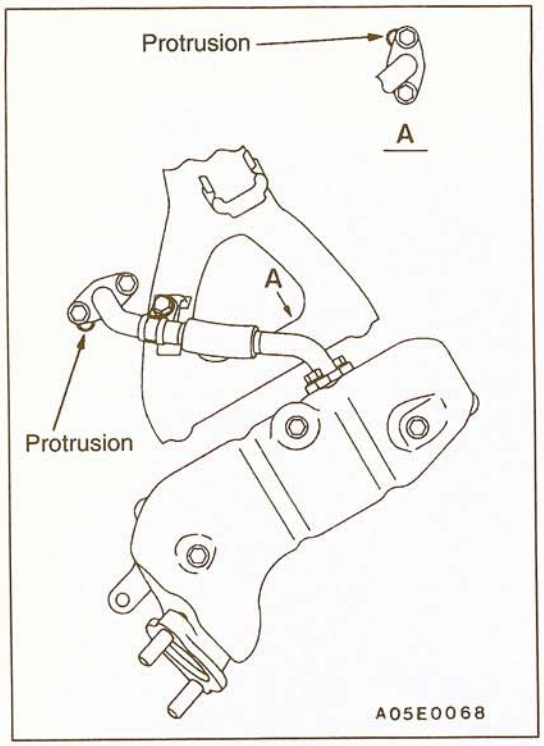


## INSTALLATION SERVICE POINT

### ▶A◀ GASKET INSTALLATION

Install with gasket protrusions in the position illustrated.

## INSPECTION

15100340047

### EXHAUST MANIFOLD

- Damage or cracking of any part.

# EXHAUST PIPE, MUFFLER AND CATALYTIC CONVERTER <3.0L-12 VALVE engine, 3.0L-24 VALVE engine for Federal>

15100540065

## EMOVAL AND INSTALLATION

**Pre-removal and Post-installation Operation**
- Under Cover Removal and Installation

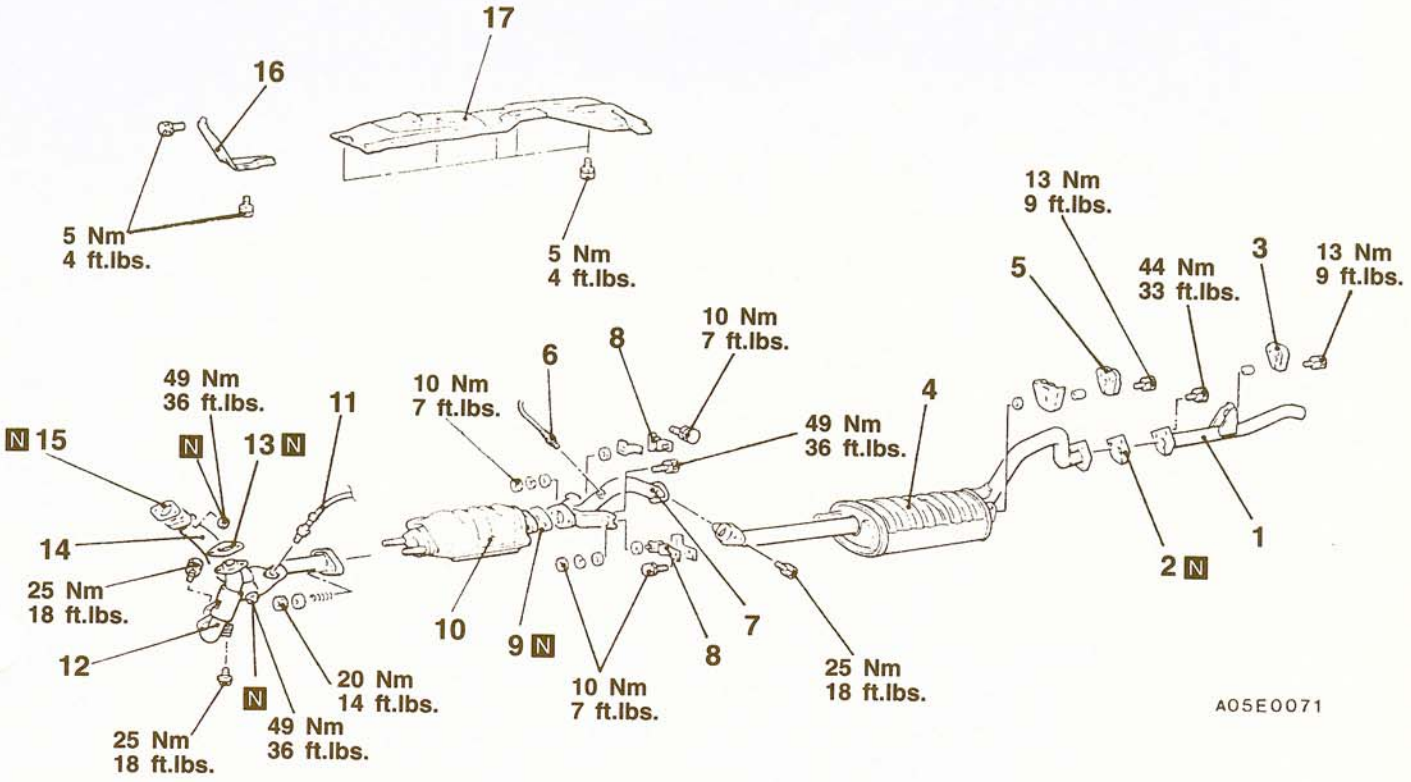


**Removal steps**

1. Tail pipe
2. Gasket
3. Hanger
4. Main muffler
5. Hanger
6. Heated oxygen sensor
7. Center exhaust pipe
8. Suspender
9. Gasket
10. Catalytic converter
11. Heated oxygen sensor
12. Front exhaust pipe (L.H.)
13. Gasket
14. Front exhaust pipe (R.H.)
15. Gasket
16. Heat protector
17. Front panel heat protector

## INSPECTION

15100550013

- Check the mufflers and pipes for corrosion or damage.
- Check the rubber hangers and rubber suspenders for deterioration or damage.
- Check for gas leakage from the mufflers and pipes.

**TSB Revision**

# EXHAUST PIPE, MUFFLER AND CATALYTIC CONVERTER <3.5L engine>

15100540089

## REMOVAL AND INSTALLATION

**Pre-removal and Post-installation Operation**
- Under Cover Removal and Installation.

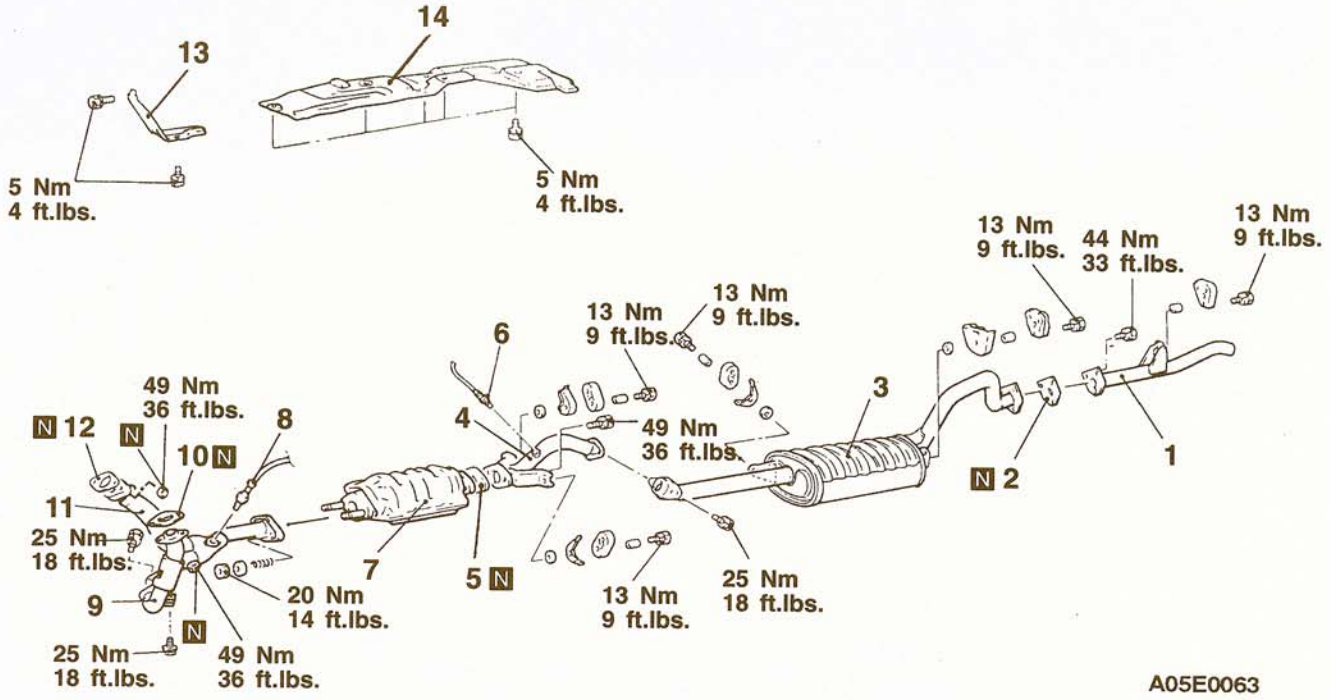


**Removal steps**

1. Tail pipe
2. Gasket
3. Main muffler
4. Center exhaust pipe
5. Gasket
6. Heated oxygen sensor
7. Catalytic converter
8. Heated oxygen sensor
9. Front exhaust pipe (L.H.)
10. Gasket
11. Front Exhaust pipe (R.H.)
12. Gasket
13. Heat protector
14. Front panel heat protector

## INSPECTION

15100550037

- Check the mufflers and pipes for corrosion or damage.
- Check the rubber hangers and rubber suspenders for deterioration or damage.
- Check for gas leakage from mufflers and pipes.

TSB Revision

# EXHAUST PIPE, MUFFLER AND CATALYTIC CONVERTER <3.0L-24 VALVE engine for California>

15100540072

## REMOVAL AND INSTALLATION

**Pre-removal and Post-installation Operation**
- Under Cover Removal and Installation.

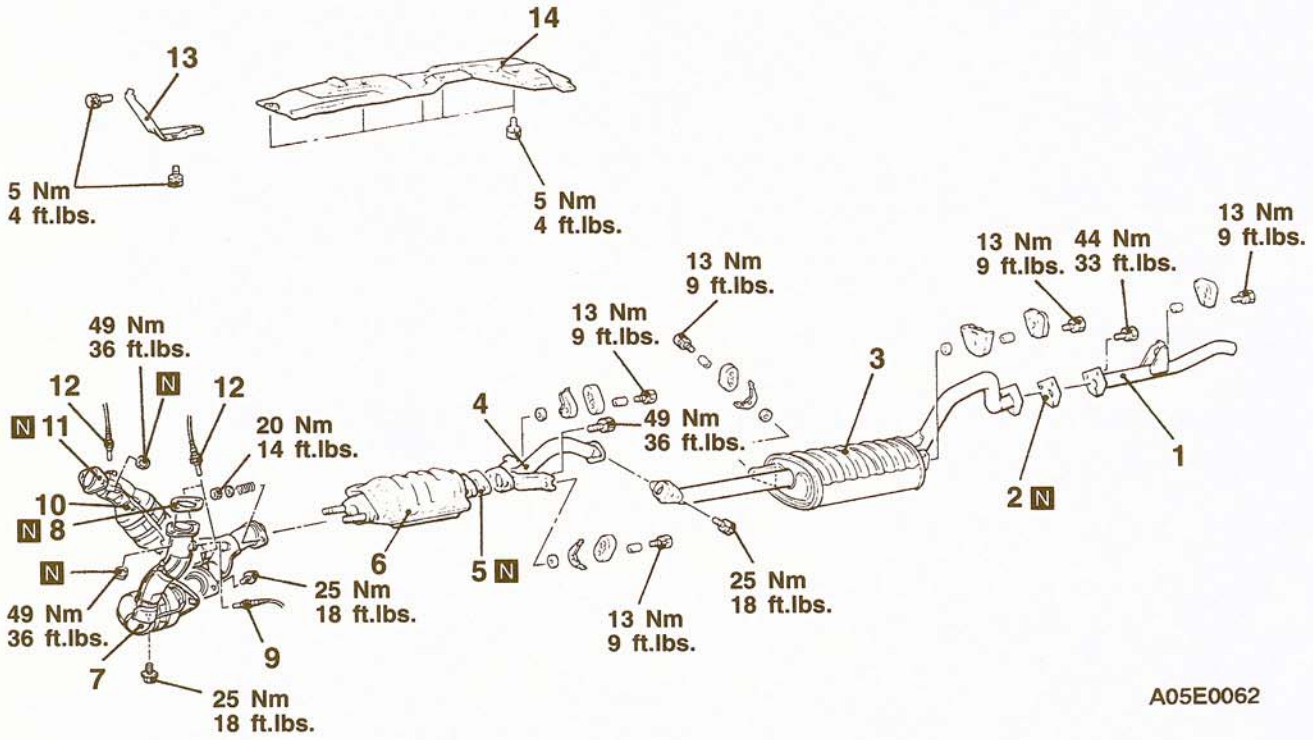


**Removal steps**

1. Tail pipe
2. Gasket
3. Main muffler
4. Center exhaust pipe
5. Gasket
6. Catalytic converter
7. Left bank warm up three-way catalytic converter
8. Gasket
9. Heated oxygen sensor
10. Right bank warm up three-way catalytic converter
11. Gasket
12. Heated oxygen sensor
13. Heat protector
14. Front panel heat protector

## INSPECTION

15100550020

- Check the mufflers and pipes for corrosion or damage.
- Check the rubber hangers and rubber suspenders for deterioration or damage.
- Check for gas leakage from mufflers and pipes.

**TSB Revision**

NOTES

# ENGINE AND EMISSION CONTROL

## CONTENTS

17209000059


AUTO-CRUISE CONTROL SYSTEM .. 5
AUTO-CRUISE CONTROL* ..... 27
GENERAL SPECIFICATIONS ..... 5
ON-VEHICLE SERVICE ..... 21
Auto-cruise Control Cable Check and Adjustment ..... 21
Auto-cruise Control Compornent Check .... 25
Auto-cruise Control Main Switch Check .... 23
Auto-cruise Control Switch Check ..... 24
SERVICE SPECIFICATIONS ..... 5
SPECIAL TOOLS ..... 5
TROUBLE SHOOTING ..... 6
ENGINE EMISSION CONTROL ..... 32
EVAPORATIVE EMISSION CONTROL SYSTEM ..... 44
EXHAUST GAS RECIRCULATION (EGR) SYSTEM <DOHC, SOHC-Federal> ..... 53
GENERAL SPECIFICATIONS ..... 32
POSITIVE CRANKCASE VENTILATION SYSTEM ..... 41
SERVICE SPECIFICATIONS ..... 32
TROUBLESHOOTING ..... 33
VACUUM HOSES ..... 33
Vacuum Hoses Routing ..... 33
Vacuum Circuit Diagram ..... 36
ENGINE CONTROL ..... 2
ACCELERATOR CABLE AND ACCELERATOR PEDAL ..... 4
ON-VEHICLE SERVICE ..... 3
Accelerator Cable Play Adjustment ..... 3
SERVICE SPECIFICATIONS ..... 2
SPECIAL TOOLS ..... 2
TROUBLESHOOTING ..... 2


**WARNINGS REGARDING SERVICING OF SUPPLEMENTAL RESTRAINT SYSTEM (SRS) EQUIPPED VEHICLES**

**WARNING!**

**(1) Improper service or maintenance of any component of the SRS, or any SRS-related component, can lead to personal injury or death to service personnel (from inadvertent firing of the air bag) or to the driver (from rendering the SRS inoperative).**

**(2) Service or maintenance of any SRS component or SRS-related component must be performed only at an authorized MITSUBISHI dealer.**

**(3) MITSUBISHI dealer personnel must thoroughly review this manual, and especially its GROUP 52B – Supplemental Restraint System (SRS) and GROUP 00 – Maintenance Service before beginning any service or maintenance of any component of the SRS or any SRS-related component.**

NOTE

The SRS includes the following components: SRS diagnosis unit, SRS warning light, air bag module, clock spring and interconnecting wiring. Other SRS-related components (that may have to be removed/installed in connection with SRS service or maintenance) are indicated in the table of contents by an asterisk (*).

# ENGINE CONTROL

17100030047

## SERVICE SPECIFICATIONS

| Items | Standard value |
|---|---|
| Accelerator cable play mm (in.) | 1–2 (.04–.08) |

## TROUBLESHOOTING

17100070032

| Trouble Symptom | Probable Cause | Remedy |
|---|---|---|
| Throttle valve will not fully open or close | Incorrectly adjusted accelerator cable | Adjust |
| | Broken return spring | Replace |
| | Malfunction of throttle lever | |
| Accelerator pedal operation not smooth (over acceleration) | Accelerator pedal incorrectly tightened | Repair |
| | Incorrectly installed accelerator cable | |
| | Accelerator cable requires lubrication | Lubricate or replace |

## SPECIAL TOOLS

17100060015

| Tool | Tool number and name | Supersession | Application |
|---|---|---|---|
| 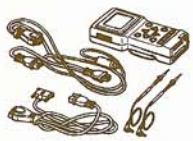 | MB991502<br>Scan tool (MUT-II) | | Fuel pump operation check |
|  | ROM pack | | |

TSB Revision

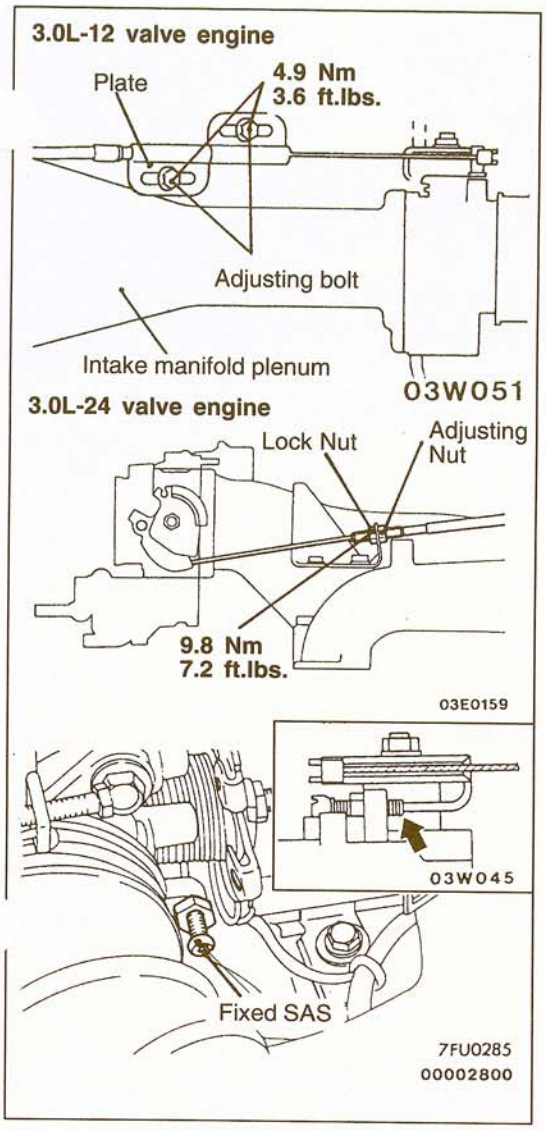


# ON-VEHICLE SERVICE

17100090076

## ACCELERATOR CABLE PLAY ADJUSTMENT

### <VEHICLES WITHOUT CRUISE CONTROL SYSTEM>

For models equipped with the auto-cruise control system, refer to P.17-21.

**(3.0L-12 valve engine)**

(1) Check that there are no sharp bends in the routing of the accelerator cable.
(2) Check that the throttle link is touching the fixed SAS (stopper).
(3) Move the plate to bring the inner cable play to the standard value, and then tighten the adjusting bolt.

**Standard value: 1–2 mm (.04–.08 in.)**

NOTE
If there is excessive play in the accelerator cable, the vehicle speed drop ("undershoot") when climbing a slope will be large.
If there is no play (excessive tension) in the accelerator cable, the idling speed will increase.

(4) After adjustment confirm that throttle valve fully opens and closes by operating pedal.

**(3.0L-24 valve engien)**

(1) Check to see if there is any sharp bend in the wiring of the accelerator cable.
(2) Confirm that the throttle lever is touched by the fixed SAS.
(3) Check to see if the inner cable play is at the standard value.

**Standard value: 1–2 mm (.04–.08 in.)**

(4) If the play is outside the standard value, adjust by sliding the adjusting nut so that the inner cable play is brought to the standard value, and then tighten the nut.

# ACCELERATOR CABLE AND ACCELERATOR PEDAL

17100120072

## REMOVAL AND INSTALLATION

<3.0L-12 VALVE ENGINE> <3.0L-24 VALVE ENGINE>

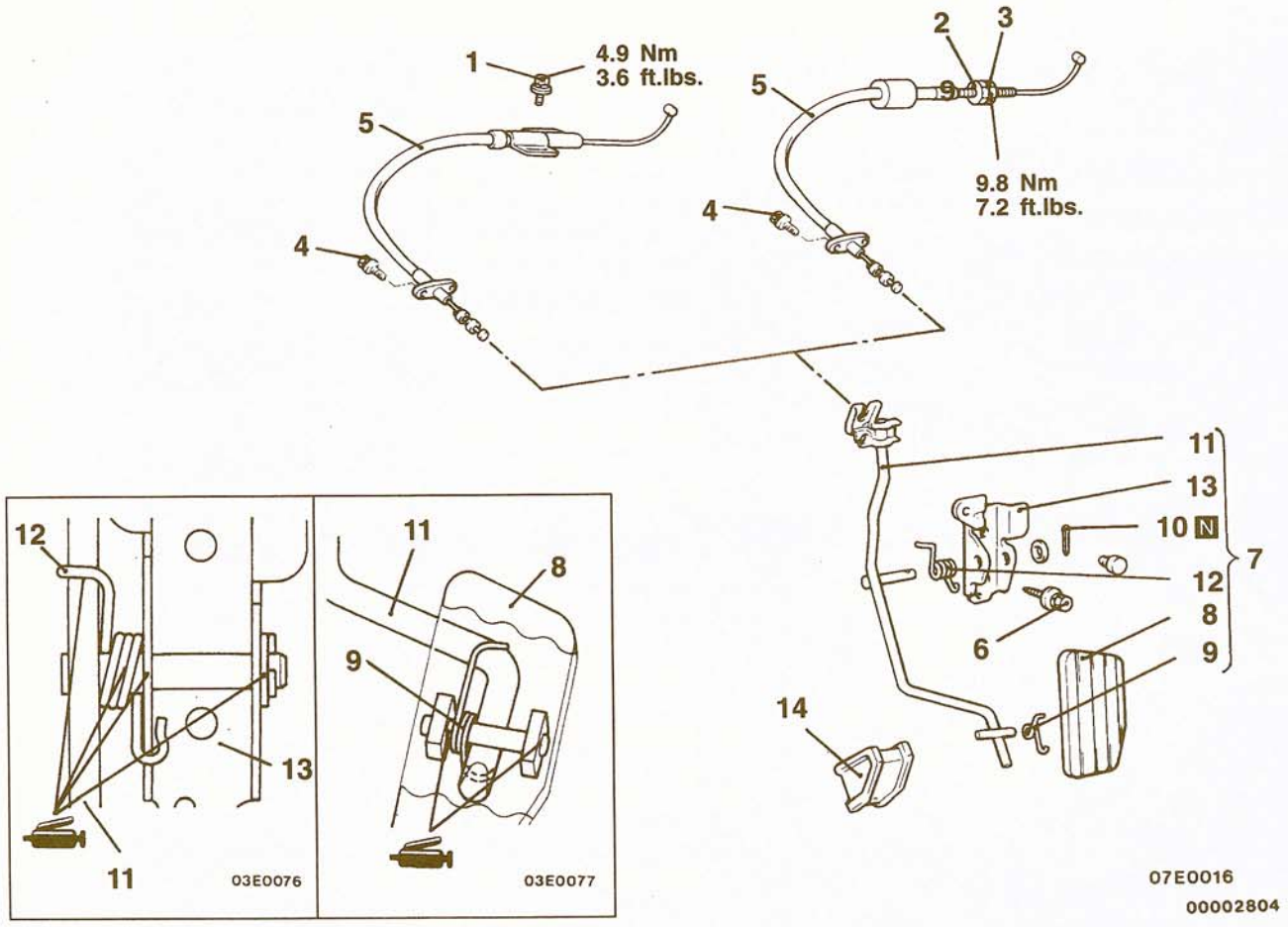


**Accelerator cable removal steps**

- Adjustment of accelerator cable (Refer to P. 17-3.)

1. Accelerator cable adjusting bolts
2. Accelerator cable adjusting nut
3. Accelerator cable lock nut
4. Accelerator cable mounting bolts
5. Accelerator cable

**Accelerator pedal removal steps**

6. Accelerator arm bracket mounting bolts
7. Accelerator pedal assembly
8. Pedal
9. Spring
10. Cotter pin
11. Accelerator arm
12. Return spring
13. Accelerator arm bracket
14. Stopper

## INSPECTION

17100130020

- Check the cable for damage.
- Check the cable outer casing for damage.
- Check the cable for uneven movement.
- Check the accelerator arm for bends.
- Check the return spring for deterioration.
- Check the connection of the accelerator cable and en fitting.

TSB Revision

# AUTO-CRUISE CONTROL SYSTEM

17200020016

## GENERAL SPECIFICATIONS

| Items | | Specifications |
|---|---|---|
| Main switch | Rated load A | 1 |
| | Voltage drop V | 0.15 or less |
| Control switch | Rated load A | SET: 0.1<br>RESUME: 0.1<br>CANCEL: 1.2 |
| | Voltage drop V | 0.2 or less |
| Cruise control unit | Set error km/h (mph) | –1.0–0(–.6–0) |
| | Range of speed control km/h (mph) | 40–200 (25–124) |
| Actuator | Drive system | Vacuum type |
| | Stroke mm (in.) | 38–42 (1.5–1.7) |
| Motor-driven vacuum pump | Rated load A | 0.4 or less |

## SERVICE SPECIFICATIONS

17200030064

| Items | Standard value |
|---|---|
| Accelerator cable play mm (in.) | 0–1 (0–.04) |
| Throttle cable play mm (in.) | 1–2 (.04–.08) |
| Cruise control cable play mm (in.) | 1–2 (.04–.08) |
| Control valve, release valve resistance Ω | 50–60 |

## SPECIAL TOOLS

17200060063

| Tool | Tool number and name | Supersession | Application |
|---|---|---|---|
| 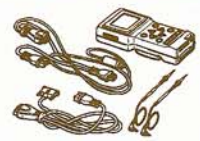 | MB991502<br>Scan tool (MUT-II) | MB991502 | Checking of the diagnostic trouble code |
|  | ROM pack | | |
|  | MB991529<br>Diagnostic trouble code check harness | Tool not necessary if scan tool (MUT-II) is available | Checking of diagnostic output when using a voltmeter |

TSB Revision

# TROUBLESHOOTING

17200200045

## DIAGNOSTIC TROUBLESHOOTING FLOW

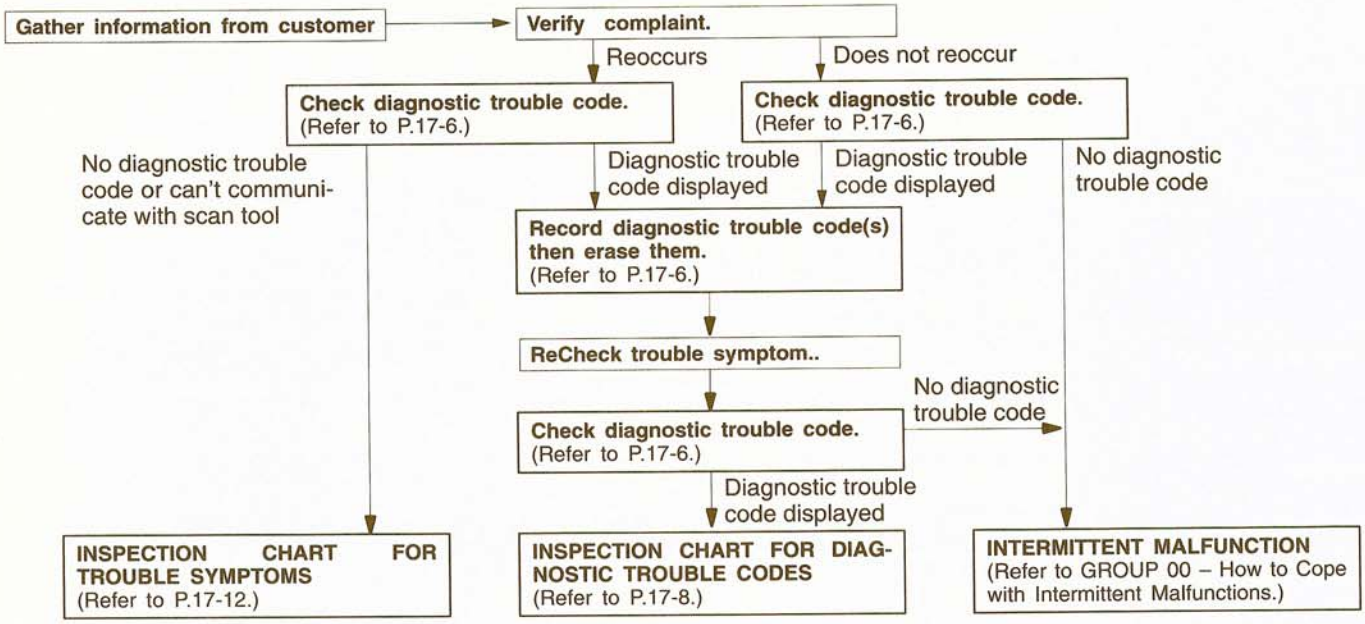


NOTE
Before carrying out trouble diagnosis, check to be sure that all of the following items are normal.
1. Is the vacuum hose correctly installed and undamaged?
2. Are the auto-cruise, accelerator, and throttle cables routed correctly?
3. Do the link assembly and cables move smoothly?
4. Is the play of each cable within its standard value?

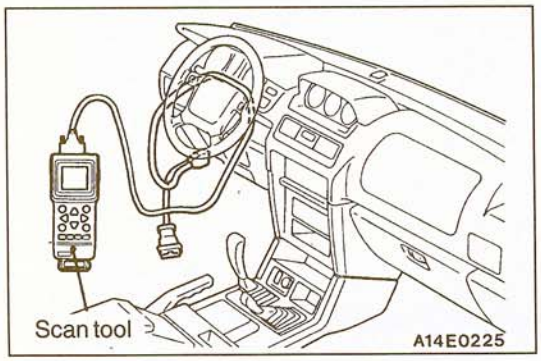


## DIAGNOSTIC FUNCTION

17200210031

### HOW TO READ DIAGNOSTIC TROUBLE CODES

#### When using the scan tool

1. Connect the scan tool to the data link connector.

**Caution**
**Turn the ignition switch off before disconnecting or connecting the scan tool.**

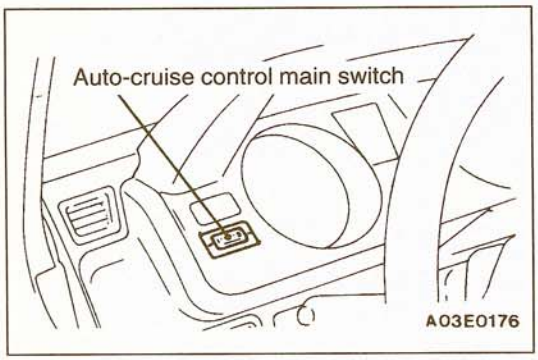


2. With the ignition switch in the ON position, turn the auto-cruise control main switch to ON and take a reading of the diagnostic trouble codes.

TSB Revision

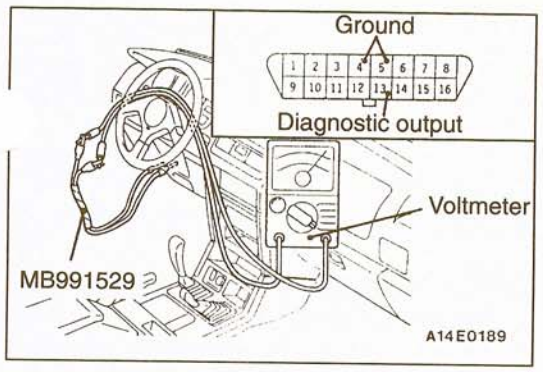


### When using a voltmeter

1. Use the special tool to connect a voltmeter between the ground terminal and the diagnostic output terminal of data link connector.
2. In the same way as when using the scan tool, turn the ignition switch to ON and turn on the auto-cruise control main switch. Then take a reading of the diagnostic trouble codes from the movement of the needle on the voltmeter.

## HOW TO READ DIAGNOSTIC TROUBLE CODES FROM A VOLTMETER

Example of diagnostic trouble code voltage waveform

**For diagnostic trouble code No. 24**

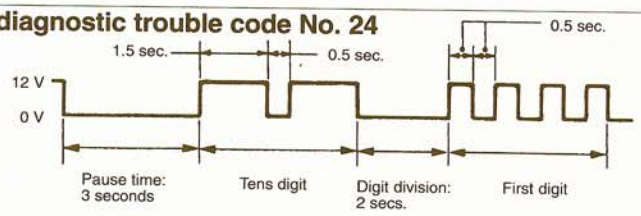


Normal voltage waveform

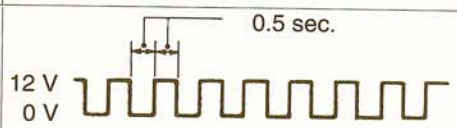


03X0114
00003896

NOTE
Other on-board diagnostic items are also output as voltage waveforms corresponding to diagnostic trouble code numbers.

## HOW TO ERASE DIAGNOSTIC TROUBLE CODES

The diagnostic trouble codes can be erased by disconnecting the (–) cable from the battery for 10 seconds or more and then re-connecting it, or by the following procedure.

1. Turn the ignition switch to ON.
2. With the SET switch at the ON position, turn the main switch to ON, and within 1 second after this, turn the RESUME switch to ON.
3. With the SET switch once more at the ON position, turn the stop light switch ON for a continuous period of 5 seconds or more.

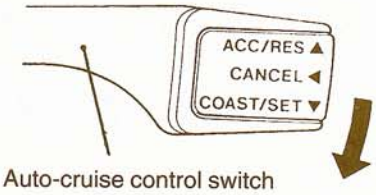


Auto-cruise control switch

03X0016

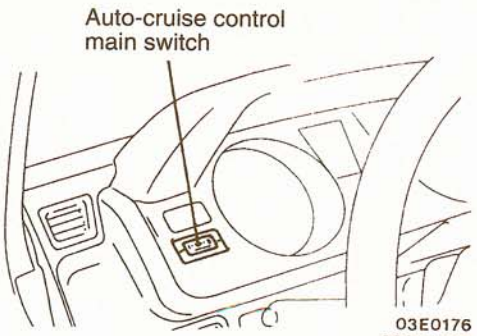


03E0176
00004037

## HOW TO READ INPUT SWITCH CODES

1. Connect the scan tool or a voltmeter to the data link connector. (Refer to P.17-6.)
2. With the ignition switch in the ON position, turn the SET switch to the ON position.
3. Within 1 second after turning the auto-cruise control main switch to ON, turn the RESUME switch to ON.
4. Operate each switch listed in the input inspection table and take a reading of the input switch codes with the scan tool or the fluctuation of a voltmeter.

   NOTE
   These codes are output as voltage waveforms in the same way as above.

### Input Inspection Table

| Code No. | Input operation | Operation judgement |
|---|---|---|
| 21 | SET switch ON | Auto-cruise control-ECU judges that SET switch is ON |
| 22 | RESUME switch ON | Auto-cruise control-ECU judges that RESUME switch is ON |
| 23 | Stop light switch (ON when brake pedal depressed) | Auto-cruise control-ECU judges that stop light switch is ON |
| 24 | Vehicle speed signal | Auto-cruise control-ECU judges that vehicle speed is 40 km/h (25 mph) or higher |
| 25 | | Auto-cruise control-ECU judges that vehicle speed is lower than 40 km/h (25 mph) |
| 26 | • Clutch pedal position switch <M/T> (ON when clutch pedal depressed)<br>• Park/neutral position switch <A/T> (ON when selector lever in N range) | Auto-cruise control-ECU judges that clutch pedal position switch <M/T> or park/neutral position switch <A/T> is ON |
| 27 | CANCEL switch ON | Auto-cruise control-ECU judges that CANCEL switch is ON |
| 28 | Throttle position sensor signal | Auto-cruise control-ECU judges that throttle position sensor voltage is 1.5 V or more |
| 29 | Closed throttle position switch | Auto-cruise control-ECU judges that closed throttle position switch is OFF |

## INSPECTION CHART FOR DIAGNOSTIC TROUBLE CODES

17200220041

| Code No. | On-board diagnostic items | Reference page |
|---|---|---|
| 11 | Auto-cruise vacuum pump drive system | 17-9 |
| 12 | Vehicle speed signal system | 17-10 |
| 14 | Auto-cruise vacuum pump power supply system | 17-10 |
| 15 | Auto-cruise control switch | 17-11 |
| 16 | Auto-cruise control-ECU | 17-11 |
| 17 | Throttle position sensor system | 17-11 |

## INSPECTION PROCEDURE FOR DIAGNOSTIC TROUBLE CODES

| Code No.11 Auto-cruise vacuum pump drive system | Probable cause |
|---|---|
| [Comment]<br>This diagnostic trouble code is output if the release valve, control valve and motor drive signals from the auto-cruise vacuum pump are not input to the auto-cruise control-ECU. | • Malfunction of the auto-cruise vacuum pump<br>• Malfunction of the stop light switch<br>• Malfunction of the connector<br>• Malfunction of the harness<br>• Malfunction of the auto-cruise control-ECU |

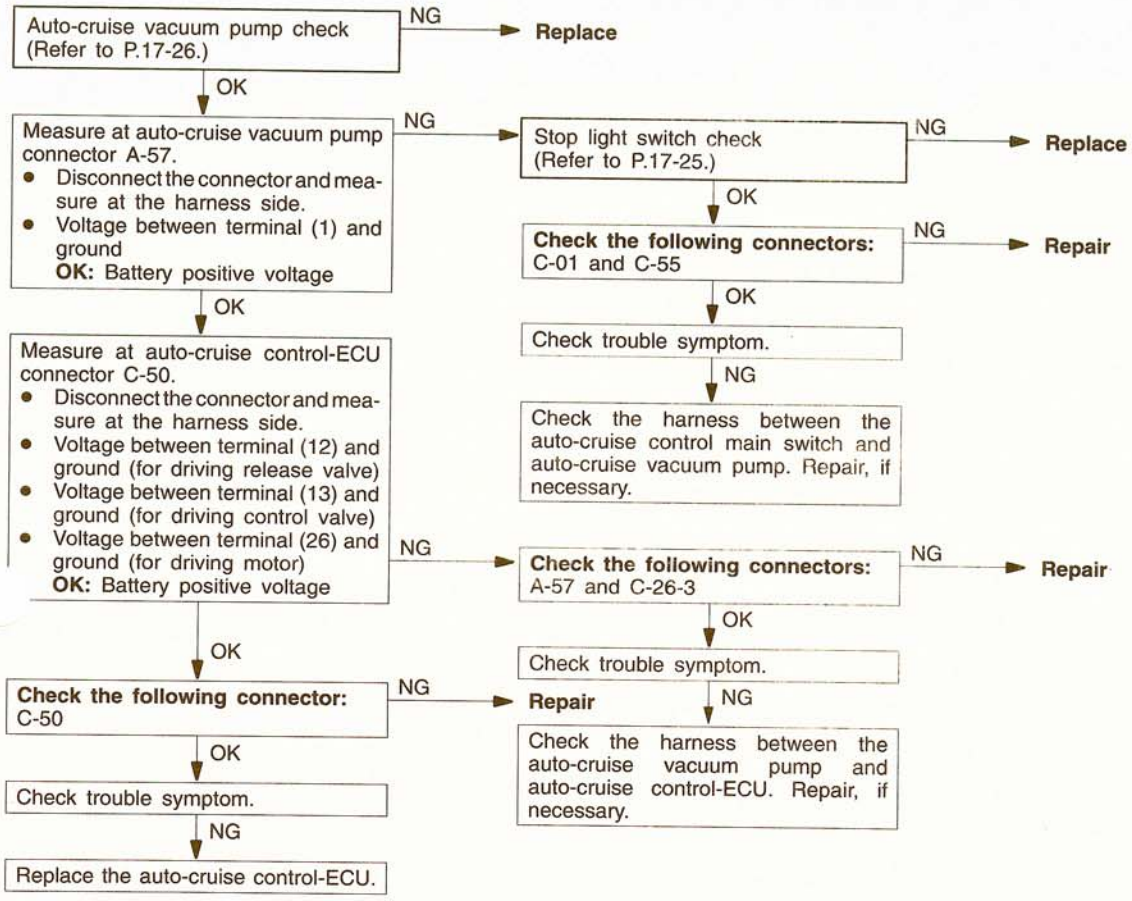


TSB Revision

| Code No.12 Vehicle speed signal system | Probable cause |
|---|---|
| [Comment]<br>This diagnostic trouble code is output if the vehicle speed signals from the vehicle speed sensor are not input to the auto-cruise control-ECU when the vehicle speed is 40 km/h (25 mph) or more. | • Malfunction of the vehicle speed sensor<br>• Malfunction of the connector<br>• Malfunction of the harness<br>• Malfunction of the auto-cruise control-ECU |

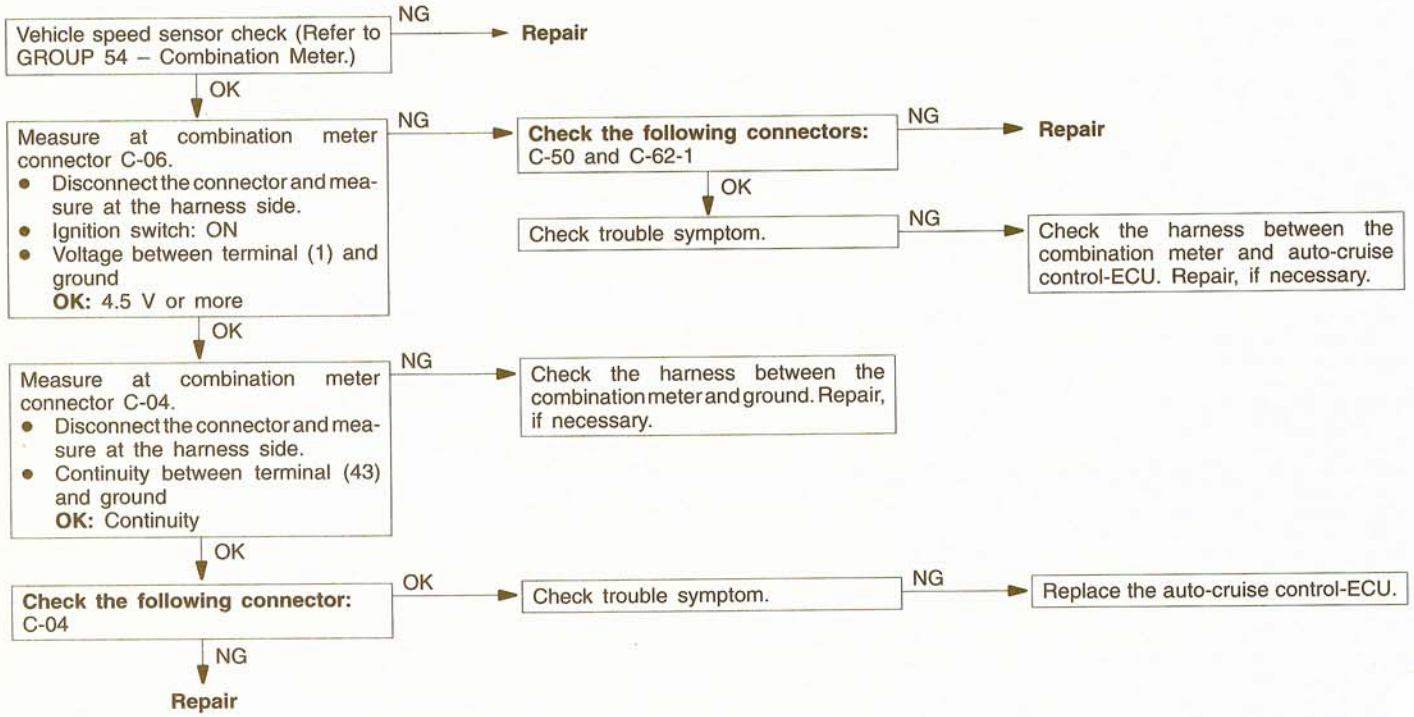


| Code No.14 Autocruise vacuum pump power supply system | Probable cause |
|---|---|
| [Comment]<br>This code will be output when the drive signals for the auto-cruise vacuum pump release valve, control valve and motor are not input to the auto-cruise control-ECU. | • Malfunction of the stop light switch<br>• Malfunction of the connector<br>• Malfunction of the harness<br>• Malfunction of the auto-cruise control-ECU |

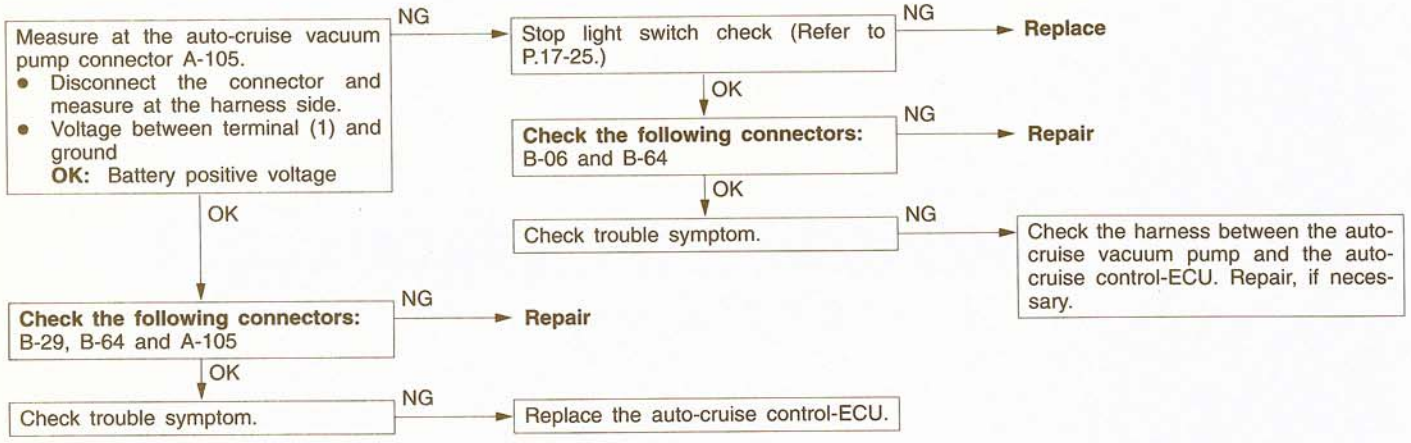


**TSB Revision**

| Code No.15 Auto-cruise control-ECU | Probable cause |
|---|---|
| [Comment]<br>This diagnostic trouble code is output if the RESUME switch or SET switch remains ON. | • Malfunction of the auto-cruise control switch |

Replace the auto-cruise control switch.

| Code No.16 Auto-cruise control-ECU | Probable cause |
|---|---|
| [Comment]<br>This diagnostic trouble code is output if there is an abnormality in the CANCEL hold circuit or the microprocessor monitor circuit in the auto-cruise control-ECU. | • Malfunction of the auto-cruise control-ECU |

Replace the auto-cruise control-ECU.

| Code No.17 Throttle position sensor system | Probable cause |
|---|---|
| [Comment]<br>This diagnostic trouble code is output if a voltage of 1.5 V or more when the closed throttle position switch is ON or 0.2 V or less when the closed throttle position switch is OFF is output for a continuous period of 4 seconds or more. | • Malfunction of the throttle position sensor<br>• Malfunction of the connector<br>• Malfunction of the harness<br>• Malfunction of the auto-cruise control-ECU |

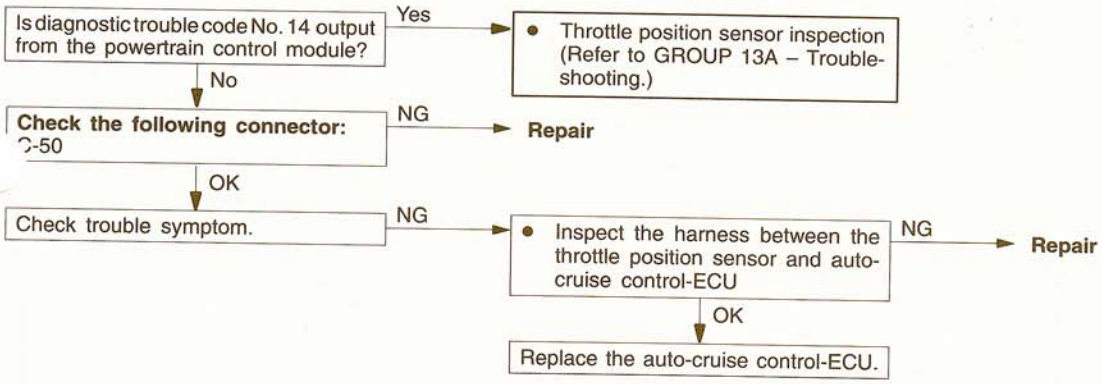


**TSB Revision**

## INSPECTION CHART FOR TROUBLE SYMPTOMS

17200230044

| Trouble symptom | | Inspection procedure No. | Reference page |
|---|---|---|---|
| Communication with scan tool is not possible. | Communication with all systems is not possible. | 1 | 17-12 |
| | Communication with auto-cruise control-ECU only is not possible. | 2 | 17-13 |
| Input switch inspection using the scan tool is not possible. (However, diagnostic inspection is possible.) | | 3 | 17-14 |
| Auto-cruise control does not cancel. | When brake pedal is depressed | 4 | 17-14 |
| | When clutch pedal is depressed <M/T> | 5 | 17-15 |
| | When select lever is set to N range <A/T> | 6 | 17-15 |
| | When CANCEL switch is set to ON | 7 | 17-15 |
| The diagnosis result displayed on the scan tool is normal even though auto-cruise control cannot be set. | | 8 | 17-16 |
| Auto-cruise control cannot be set. | | 9 | 17-16 |
| Hunting (repeated acceleration and deceleration) occurs at the set vehicle speed. | | 10 | 17-17 |
| When the auto-cruise control main switch is ON, the switch indicator on the instrument panel does not illuminate. (However, auto-cruise control is normal.) | | 11 | 17-17 |
| Auto-cruise control main switch illumination light does not illuminate. | | 12 | 17-17 |
| Auto-cruise control indicator light inside combination meter does not illuminate. (However, auto-cruise control is normal.) | | 13 | 17-18 |

## INSPECTION PROCEDURE FOR TROUBLE SYMPTOMS

### INSPECTION PROCEDURE 1

| **Communication with scan tool is not possible. (Communication with all systems is not possible.)** | **Probable cause** |
|---|---|
| [Comment]<br>A defect in the power supply system (including ground) for the diagnostic line may be present. | • Malfunction of the connector.<br>• Malfunction of the harness. |

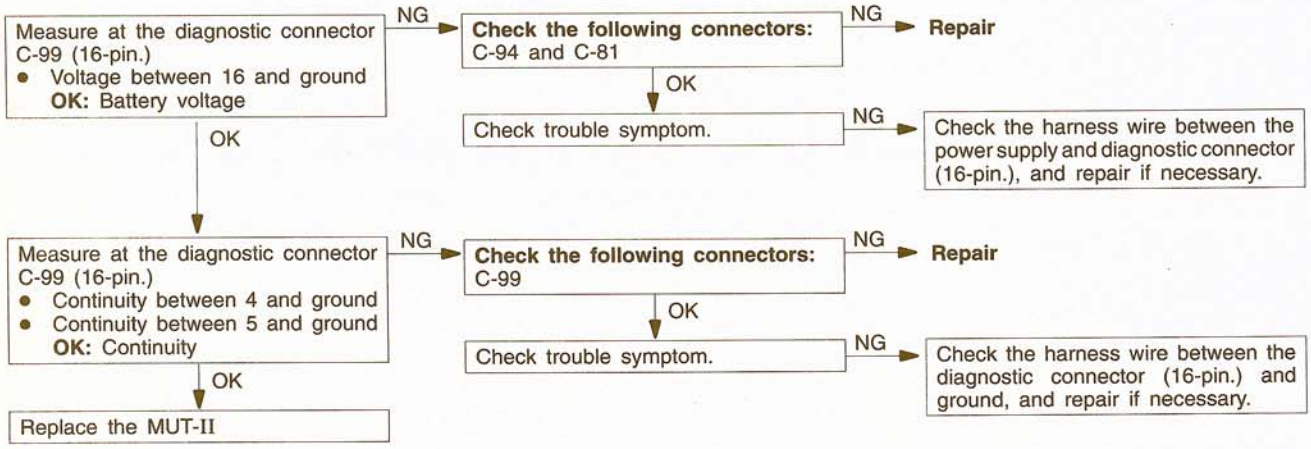


**TSB Revision**

## INSPECTION PROCEDURE 2

| Communication with scan tool is not possible. (Communication with auto-cruise control-ECU only is not possible.) | Probable cause |
|---|---|
| [Comment]<br>A malfunction of auto-cruise control main switch circuit or a malfunction of auto-cruise control-ECU ground circuit may be present. | • Malfunction of the auto-cruise control main switch.<br>• Malfunction of the connector.<br>• Malfunction of the harness.<br>• Malfunction of the auto-cruise control-ECU. |

### 1. Auto-cruise control main switch circuit malfunction

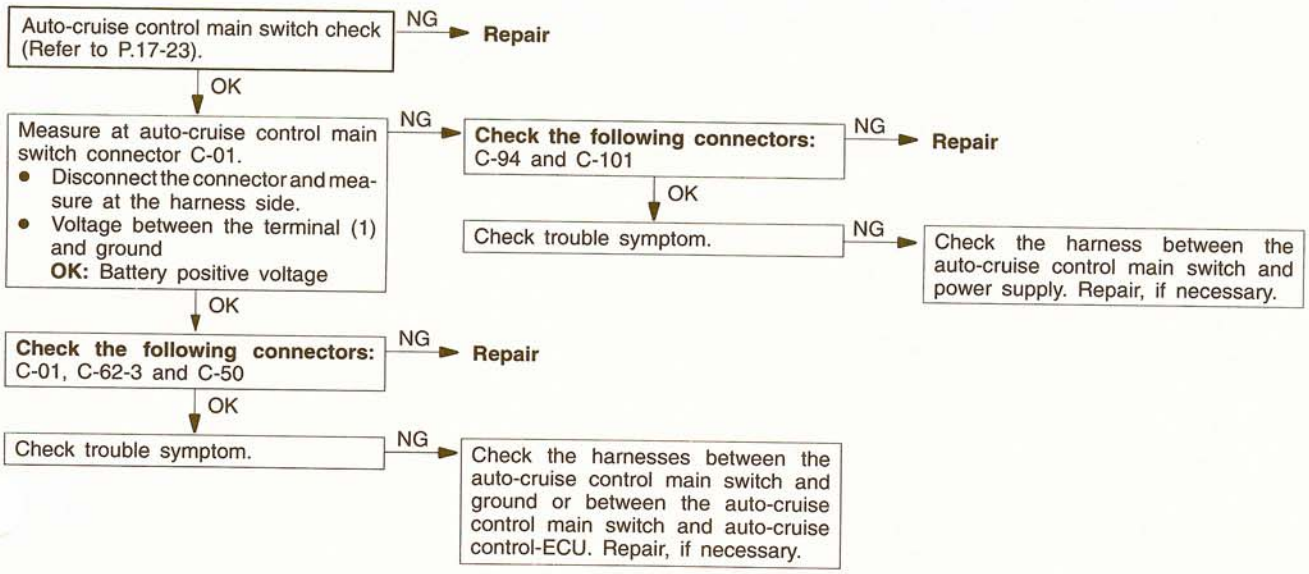


### 2. Auto-cruise control-ECU ground circuit malfunction

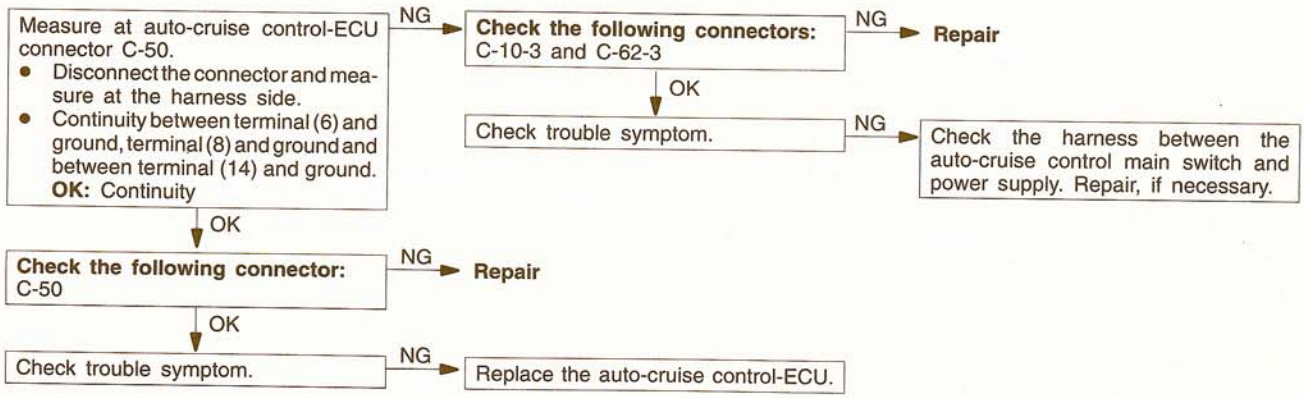

## INSPECTION PROCEDURE 3

| Input switch inspection using the scan tool is not possible. (However, diagnostic inspection is possible.) | Probable cause |
|---|---|
| [Comment]<br>A malfunction of auto-cruise control switch circuit system may be present. | • Malfunction of the auto-cruise control switch.<br>• Malfunction of the clock spring .<br>• Malfunction of the connector.<br>• Malfunction of the harness. |

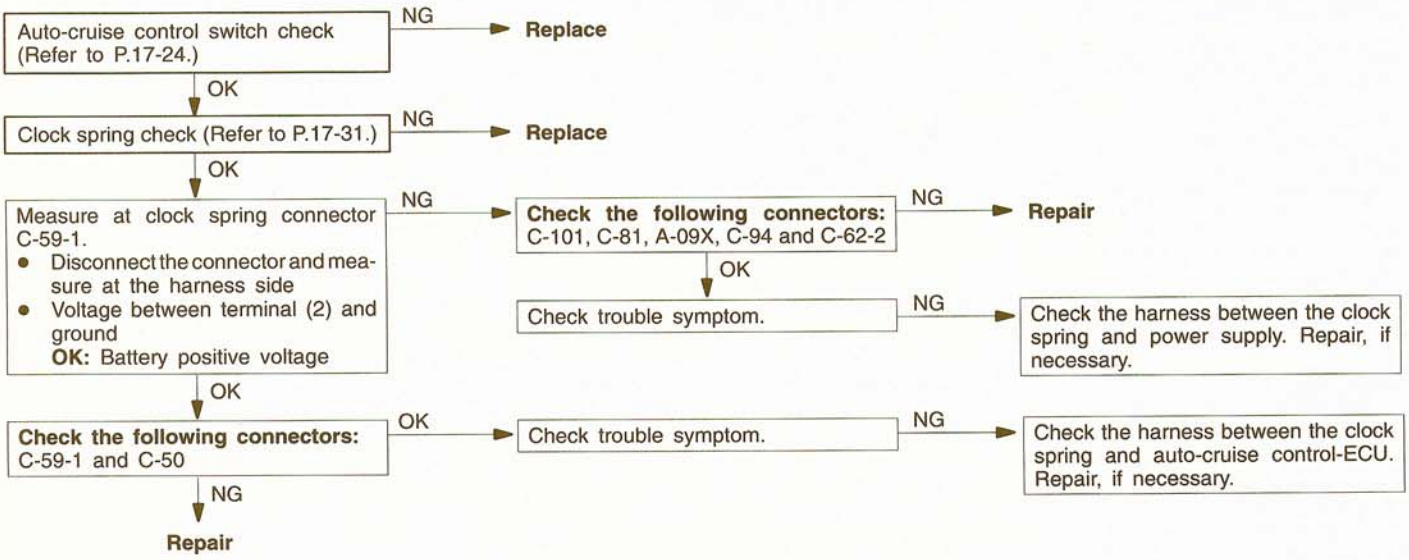


## INSPECTION PROCEDURE 4

| When brake pedal is depressed, auto-cruise control does not cancel. | Probable cause |
|---|---|
| [Comment]<br>A malfunction of stop light switch or a malfunction of stop light circuit may be present. | • Malfunction of the stop light switch.<br>• Malfunction of the connector.<br>• Malfunction of the harness.<br>• Malfunction of the auto-cruise control-ECU. |

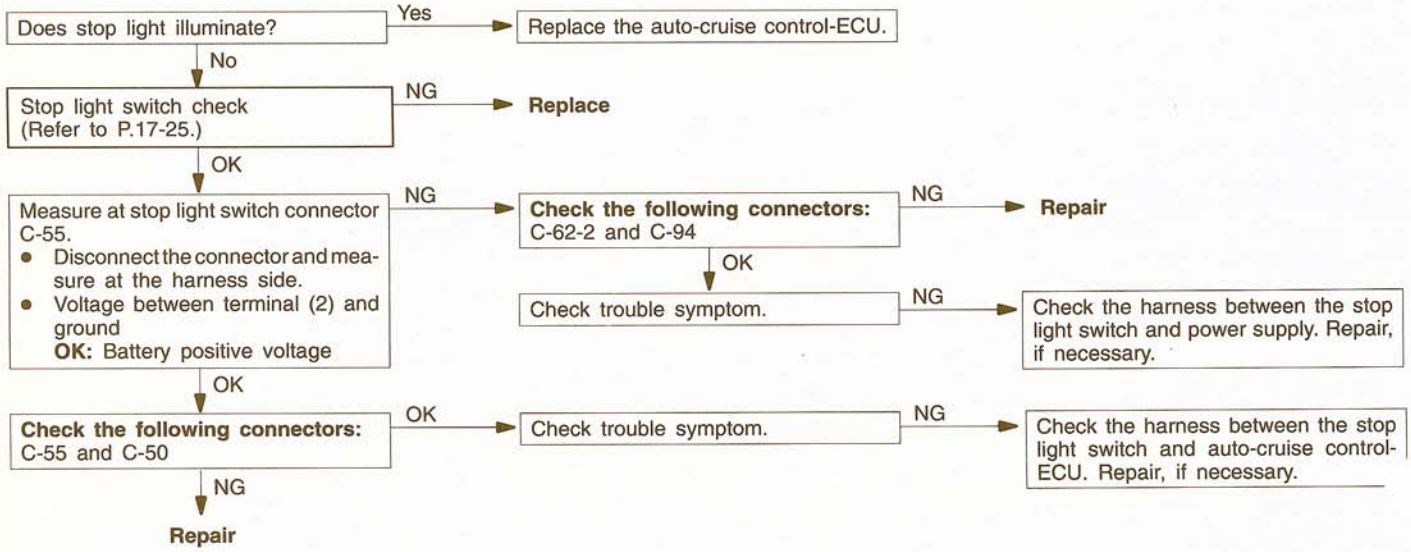


**TSB Revision**

## INSPECTION PROCEDURE 5

| When clutch pedal is depressed, auto-cruise control does not cancel. <M/T> | Probable cause |
|---|---|
| [Comment]<br>A malfunction of clutch pedal position switch or clutch circuit may be present. | • Malfunction of the clutch pedal position switch.<br>• Malfunction of the connector.<br>• Malfunction of the harness.<br>• Malfunction of the auto-cruise control-ECU. |

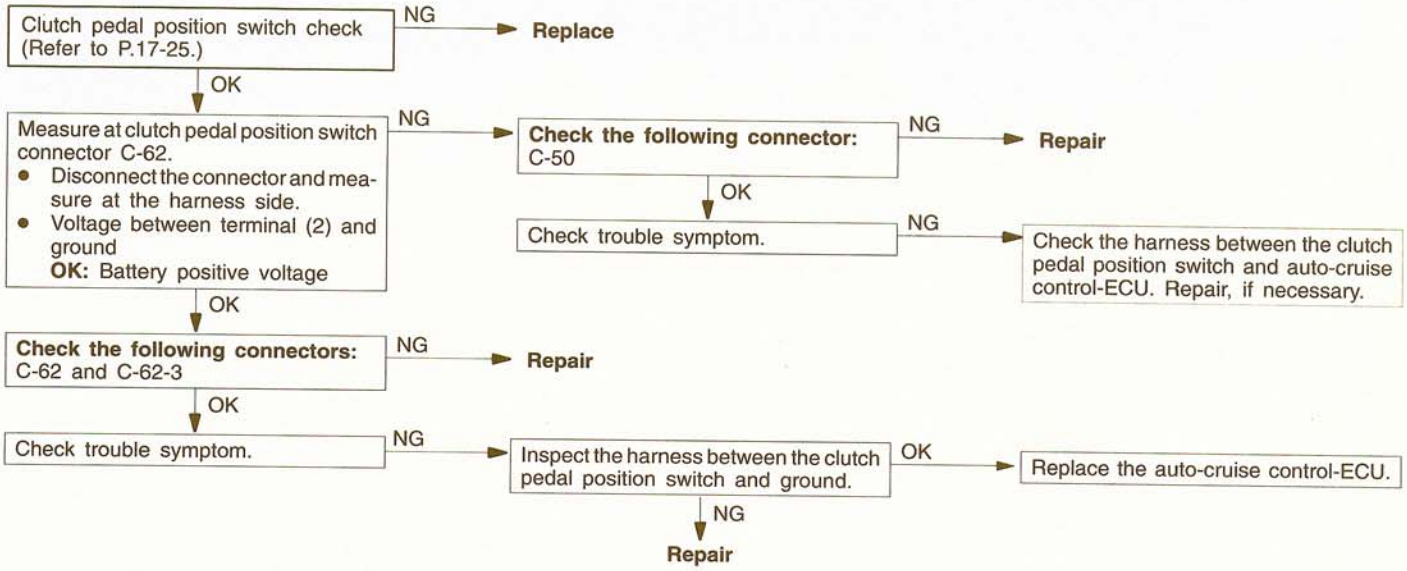


## INSPECTION PROCEDURE 6

| When select lever is set to N range, auto-cruise control does not cancel. <A/T> | Probable cause |
|---|---|
| [Comment]<br>The cause is probably an open-circuit in the output signal circuit in N range. | • Malfunction of the park/neutral position switch<br>• Malfunction of the connector.<br>• Malfunction of the harness.<br>• Malfunction of the auto-cruise control-ECU. |

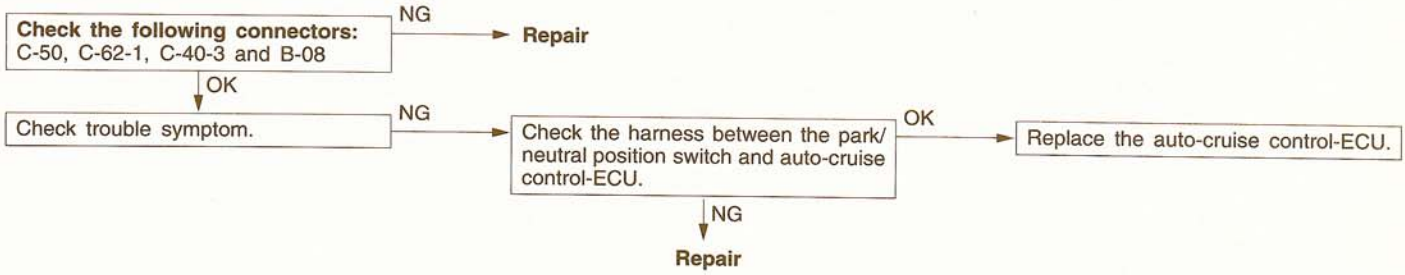


## INSPECTION PROCEDURE 7

| When auto-cruise control CANCEL switch is set to ON, auto-cruise control does not cancel. | Probable cause |
|---|---|
| [Comment]<br>An open-circuit in the circuit inside the CANCEL switch may be present. | • Malfunction of the auto-cruise control switch. |

Replace the auto-cruise control switch.

**TSB Revision**

## INSPECTION PROCEDURE 8

| The diagnostic result displayed on the scan tool is normal even though auto-cruise control cannot be set. | Probable cause |
|---|---|
| [Comment]<br>Because of an open-circuit in the battery backup circuit system, the fail-safe function prevents diagnostic trouble codes from being memorized and displayed even though auto-cruise control is canceled. | • Malfunction of the connector.<br>• Malfunction of the harness.<br>• Malfunction of the auto-cruise control-ECU. |

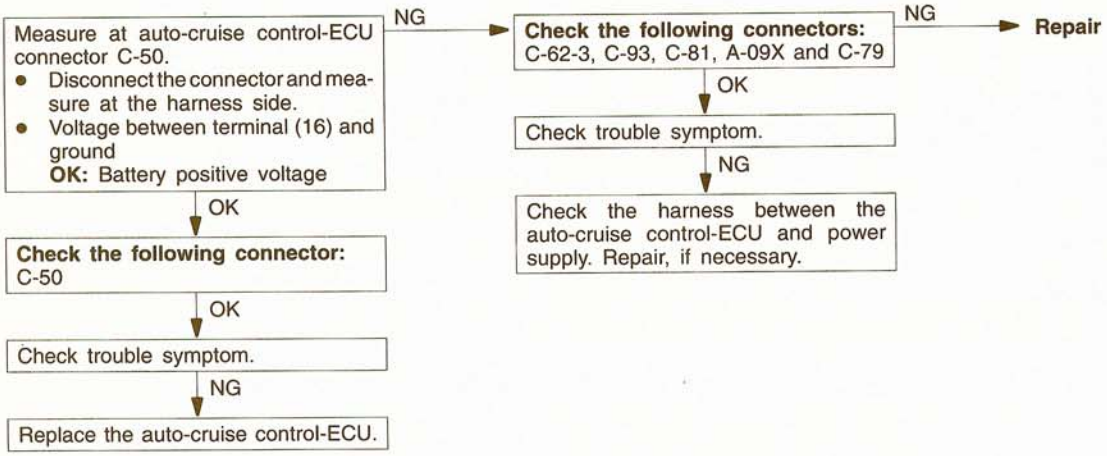


## INSPECTION PROCEDURE 9

| Auto-cruise control cannot be set. | Probable cause |
|---|---|
| [Comment]<br>A malfunction of switches or that the fail-safe function cancelling auto-cruise control may be present. | • Malfunction of the auto-cruise control mai switch.<br>• Malfunction of the auto-cruise control switch.<br>• Malfunction of the clock spring.<br>• Malfunction of the harnesses or connectors.<br>• Malfunction of the clutch pedal position switch <M/T>.<br>• Malfunction of the park/neutral position switch <A/T><br>• Malfunction of the auto-cruise control-ECU. |

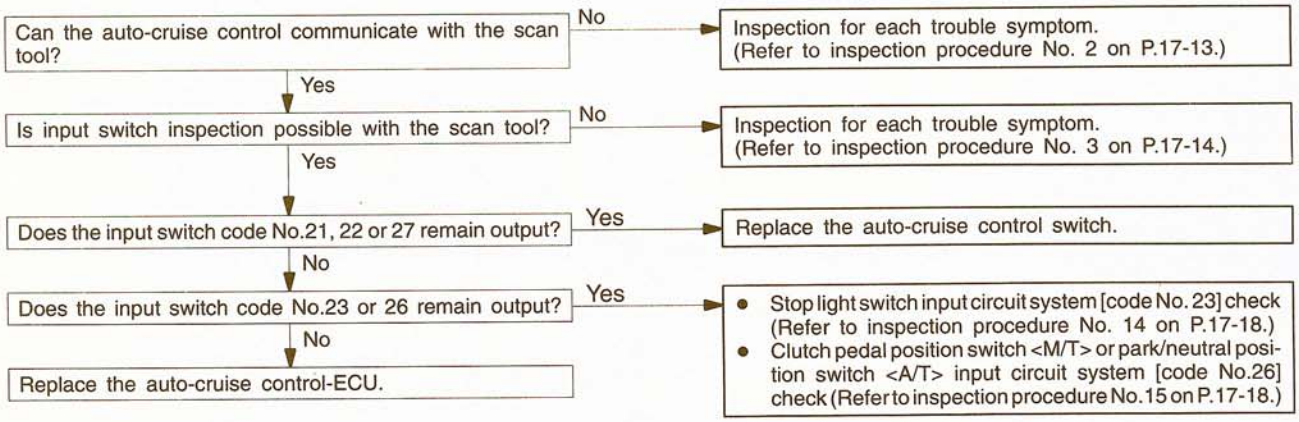


**TSB Revision**

## INSPECTION PROCEDURE 10

| Hunting (repeated acceleration and deceleration) occurs at the set vehicle speed. | Probable cause |
|---|---|
| [Comment]<br>A malfunction of vehicle speed sensor or incorrect vacuum in the auto-cruise vacuum pump or actuator may be present. | • Malfunction of the vehicle speed sensor.<br>• Malfunction of the auto-cruise vacuum pump.<br>• Malfunction of the actuator.<br>• Malfunction of the auto-cruise control-ECU. |

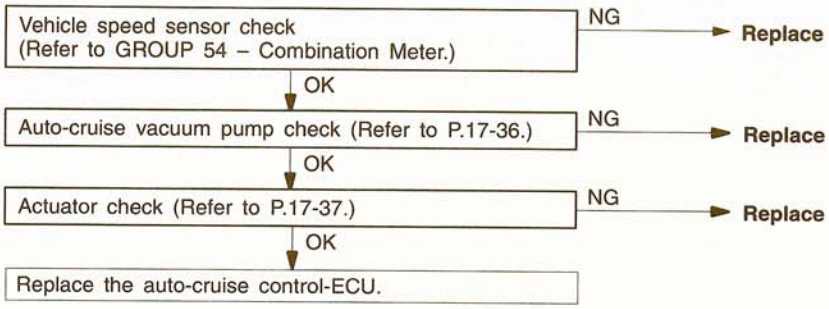


## INSPECTION PROCEDURE 11

| When the auto-cruise control main switch is ON, the switch indicator on the instrument panel does not illuminate. (However, auto-cruise control is normal.) | Probable cause |
|---|---|
| [Comment]<br>Blown bulb in auto-cruise control main switch. | • Malfunction of the auto-cruise control main switch. |

Replace the auto-cruise control main switch.

## INSPECTION PROCEDURE 12

| Auto-cruise control main switch illumination light does not illuminate. | Probable cause |
|---|---|
| [Comment]<br>A malfunction of auto-cruise control main switch, harness, or connector may exist. | • Malfunction of the auto-cruise control main switch.<br>• Malfunction of the connector.<br>• Malfunction of the harness. |

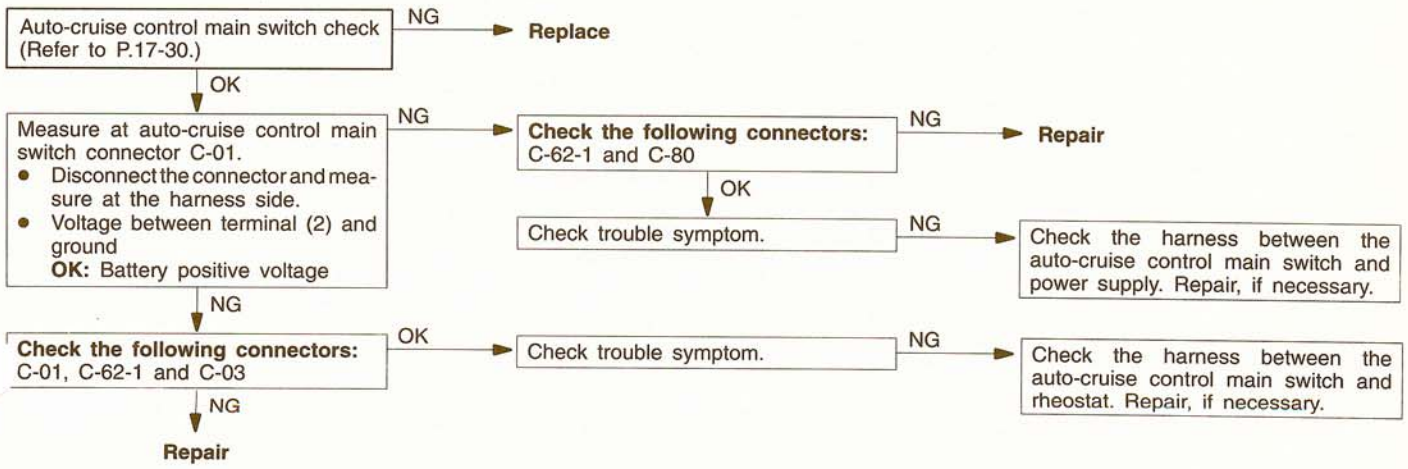


**TSB Revision**

## INSPECTION PROCEDURE 13

| Auto-cruise control indicator inside combination meter does not illuminate. (However, auto-cruise control is normal.) | Probable cause |
|---|---|
| [Comment]<br>A malfunction of the bulb, the connector or harness may be present. | • Malfunction of the bulb.<br>• Malfunction of the harness.<br>• Malfunction of the connector.<br>• Malfunction of the auto-cruise control-ECU. |

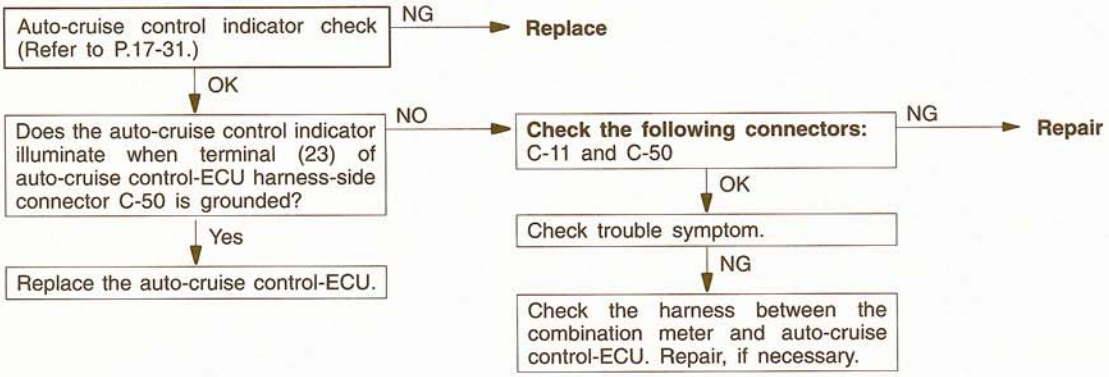


## INSPECTION PROCEDURE 14

Stop light switch input circuit system check (Code No. 23)

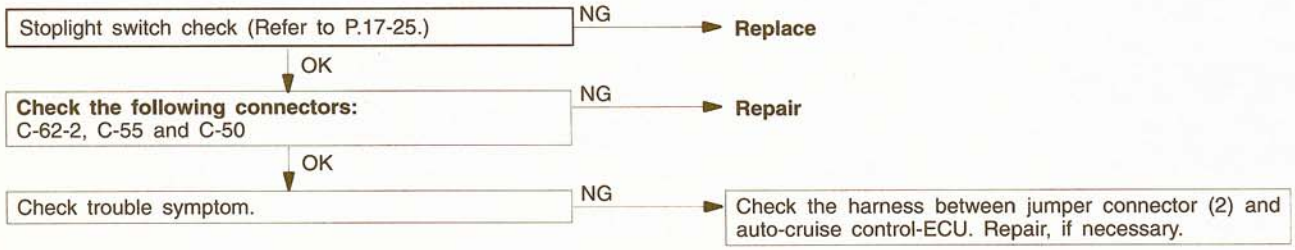


## INSPECTION PROCEDURE 15

Clutch pedal position switch <M/T> or park/neutral position switch <A/T> input circuit system check (Code No. 26)

### <M/T>

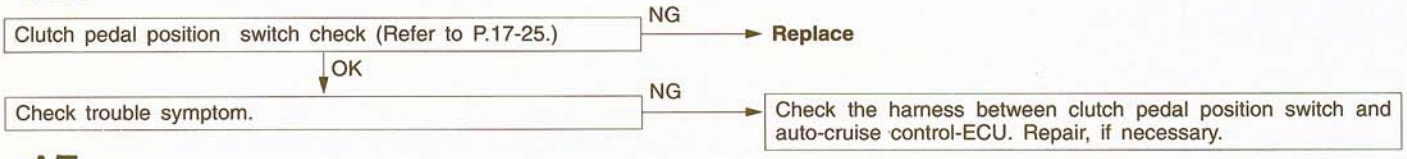


### <A/T>

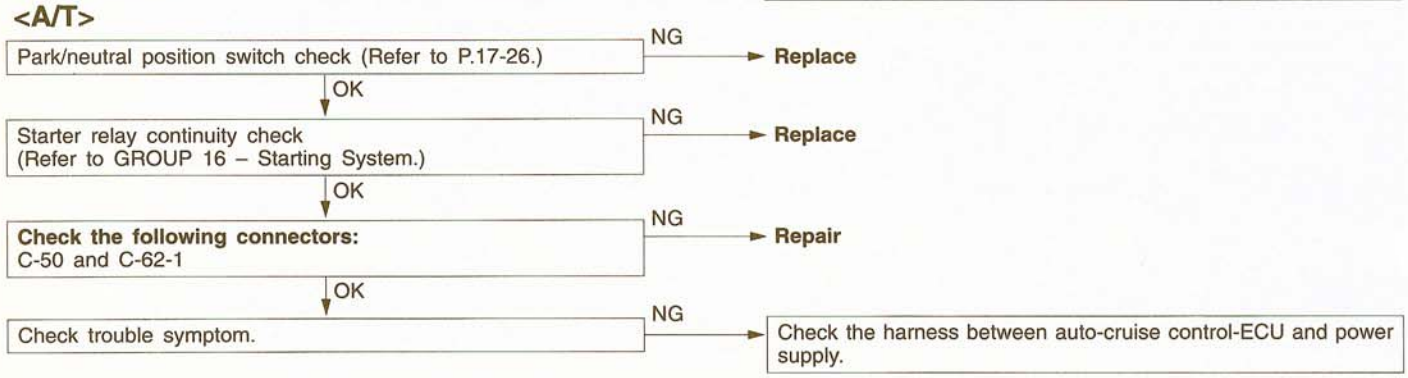


**TSB Revision**

## CHECK AT THE ECU TERMINALS

17200270022

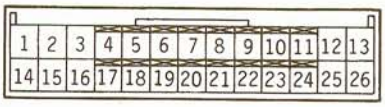


03X0097

| Terminal No. | Check item | Check conditions | | Normal condition |
|---|---|---|---|---|
| 1 | Clutch pedal position switch input <M/T> | When pedal is not depressed | When clutch pedal position switch is OFF | Battery positive voltage |
| | | When pedal is depressed | When clutch pedal position switch is ON | 0V |
| | Park/neutral position switch input <A/T> | When selector lever is in a position other than N range | When park/neutral position switch is OFF | Battery positive voltage |
| | | When selector lever is in N range | When park/neutral position switch is ON | 0V |
| 2 | ECU power supply | When ignition switch is ON | | Battery positive voltage |
| 3 | Power supply for OD signal control <A/T> | When ignition switch is ON | | Battery positive voltage |
| 4 | Closed throttle position switch output | When accelerator pedal is depressed | When closed throttle position switch is OFF | 4.5–5.5V |
| | | When accelerator pedal is not depressed | When closed throttle position switch is ON | 0V |
| 5 | Throttle position sensor input | When accelerator pedal is fully depressed | | 4.0–5.5V |
| | | When accelerator pedal is released | | 0.5–0.7V |
| 6 | Ground | At all times | | Continuity |
| 8 | Ground | At all times | | Continuity |
| 10 | OD control output <A/T> | When OD switch is ON | | Battery positive voltage |
| | | When OD switch is OFF | | 0V |
| 11 | OD switch input <A/T> | When OD switch is ON | | Battery positive voltage |
| | | When OD switch is OFF | | 0V |
| 12 | Auto-cruise vacuum pump release valve and control valve input | When driving at constant speed using the SET switch | Release valve closed | 0V |
| 13 | | | Control valve closed | 0V |
| 12 | | When accelerating with the RESUME switch while driving at constant speed | Release valve closed | 0V |
| 13 | | | Release valve closed | 0V |
| 12 | | When decelerating with the SET switch while driving at constant speed | Release valve closed | 0V |
| 13 | | | Control valve open | Battery positive voltage |
| 12 | | When canceling constant-speed driving with the CANCEL switch | Release valve open | Battery positive voltage |
| 13 | | | Control valve open | Battery positive voltage |

TSB Revision

| Terminal No. | Check item | Check conditions | | Normal condition |
|---|---|---|---|---|
| 14 | Ground | At all times | | Continuity |
| 15 | Stop light switch input | When brake pedal is depressed | When stop light switch is ON | Battery positive voltage |
| | | When brake pedal is not depressed | When stop light switch is OFF | 0V |
| 16 | ECU backup power supply | At all times | | Battery positive voltage |
| 18 | Auto-cruise control switch input | When SET switch is pressed | When SET switch is ON | 3V |
| | | When SET switch is not pressed | When SET switch is OFF | 0V |
| | | When RESUME switch is pressed | When RESUME switch is ON | 6V |
| | | When RESUME switch is not pressed | When RESUME switch is OFF | 0V |
| | | When CANCEL switch is pressed | When CANCEL switch is ON | Battery positive voltage |
| | | When CANCEL switch is not pressed | When CANCEL switch is OFF | 0V |
| 19 | Vehicle speed sensor input | When vehicle is moved forwards and backwards, sensor turns ON and OFF repeatedly. | When sensor is ON | 0V |
| | | | When sensor is OFF | 4.5 V or more |
| 20 | ACC power supply | When ignition switch is in ACC position | | Battery positive voltage |
| 23 | Indicator input (inside combination meter) | When driving at constant speed | When indicator is illuminated | 0V |
| | | When constant-speed driving is cancelled | When indicator is switched off | Battery positive voltage |
| 24 | Diagnosis control input | When ignition switch is ON | | 4V or more |
| 25 | Surge absorption circuit terminal | When auto-cruise main switch is ON | | Battery positive voltage |
| 26 | Auto-cruise vacuum pump motor input | When driving at constant speed using the SET switch | Motor stopped | Battery positive voltage |
| | | When accelerating with the RESUME switch while driving at constant speed | Motor running | 0V |
| | | When decelerating with the SET switch while driving at constant speed | Motor stopped | Battery positive voltage |
| | | When cancelling constant-speed driving with the CANCEL switch | Motor stopped | Battery positive voltage |

**TSB Revision**

# ON-VEHICLE SERVICE

17200090079

## AUTO-CRUISE CONTROL CABLE CHECK AND ADJUSTMENT

### <Except 3.0L-24 VALVE ENGINE for California>

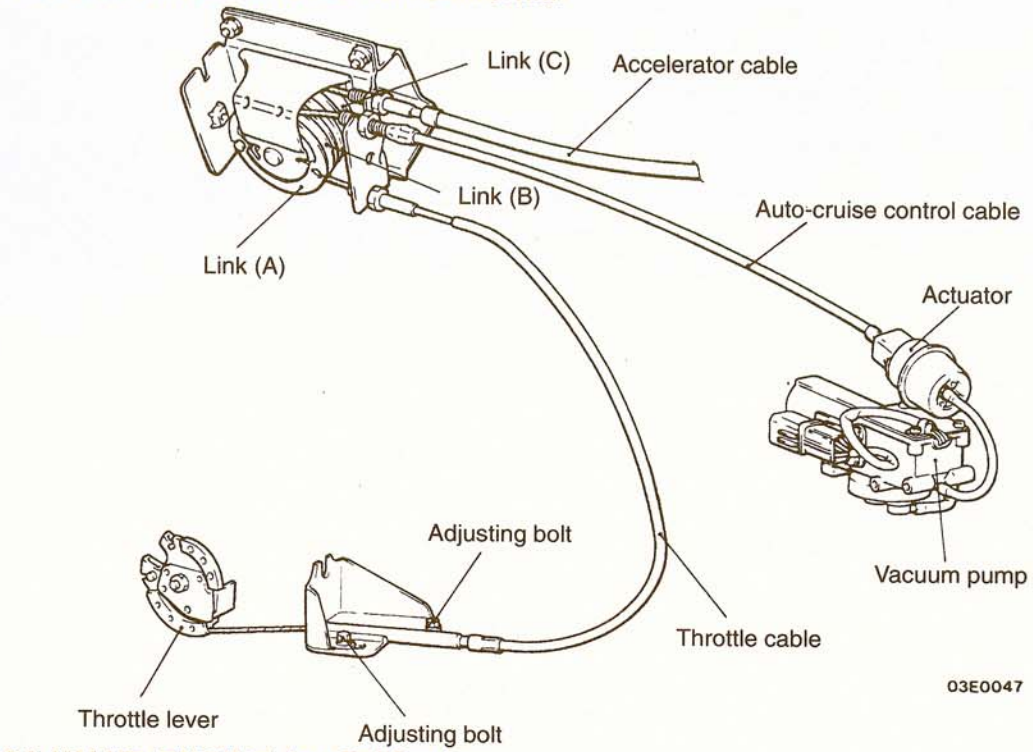


### <3.0L-24 VALVE ENGINE for California>

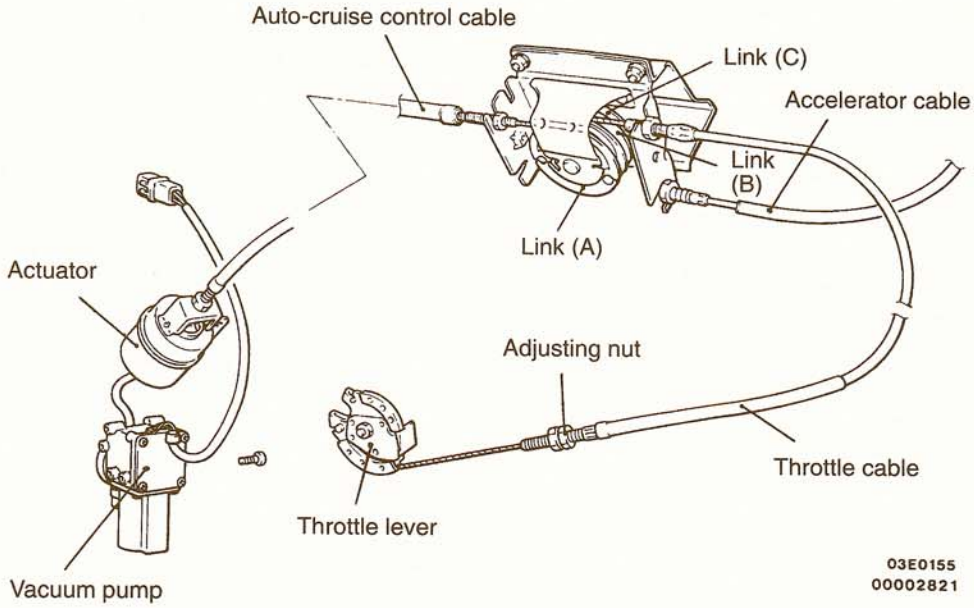


(1) Remove the link protector. (Refer to P.17-27.)
(2) Check if there is any deflection in the inner cables of the accelerator cable, cruise control cable and throttle cable.
If there is excessive deflection or no play in an inner cable, loosen the adjusting bolts and nuts to release each link from the throttle lever.
(Do not remove the adjusting bolts or nuts.)

TSB Revision

<Except 3.0L – 24 VALVE ENGINE for California>

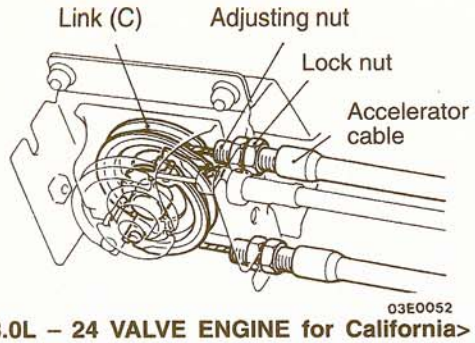


<3.0L – 24 VALVE ENGINE for California>

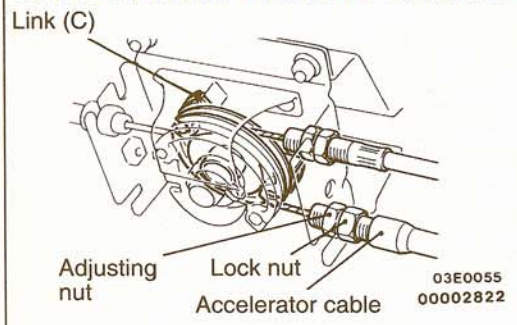


## Accelerator Cable

(1) While holding link (C) so that it is touching the stopper, adjust the play of the accelerator cable with the adjusting nut so that the cable play is at the standard value.

**Standard value**
**ELC-4A/T 2–3 mm (.08–.12 in.)**
**Except ELC-4A/T 0–1 mm (0–.04 in.)**

(2) After adjusting, secure the cable with the lock nut.

<Except 3.0L – 24 VALVE ENGINE for California>

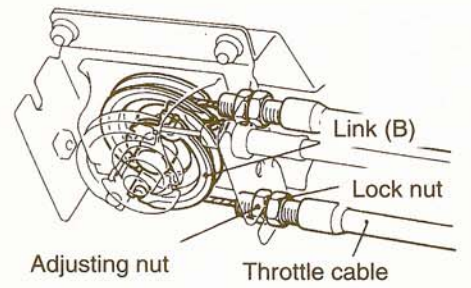


<3.0L – 24 VALVE ENGINE for California>

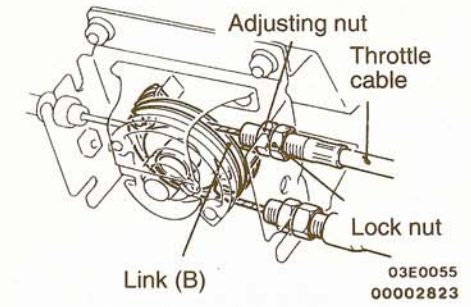


## Throttle Cable

(1) While holding link (B) so that it is touching link (C), adjust the play of the throttle cable with the adjusting nut and adjusting bolts <throttle lever side> so that the cable play is at the standard value.

**Standard value: 1–2 mm (.04–.08 in.)**

(2) After adjusting, secure the cable with the lock nut.

<Except 3.0L – 24 VALVE ENGINE for California>

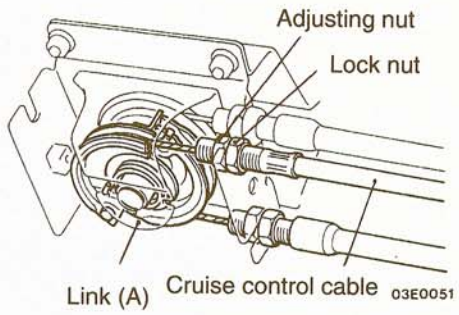


<3.0L – 24 VALVE ENGINE for California>

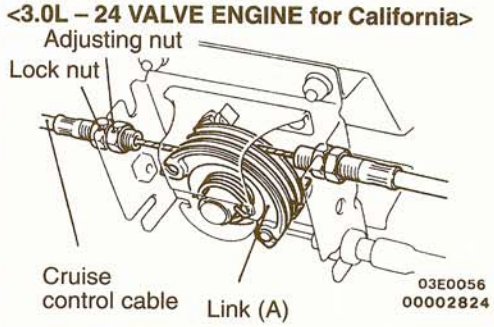


## Auto-cruise Control Cable

(1) While holding link (A) so that it is touching link (B), adjust the play of the cruise control cable with the adjusting nut so that the cable play is at the standard value.

**Standard value: 1–2 mm (.04–.08 in.)**

(2) After adjusting, secure the cable with the lock nut.

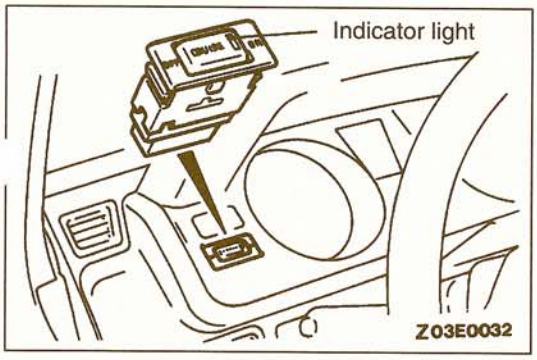


## AUTO-CRUISE CONTROL MAIN SWITCH CHECK

17200110065

(1) Turn the ignition switch to ON.
(2) Check that the indicator light within the switch illuminates when the main switch is turned to ON.

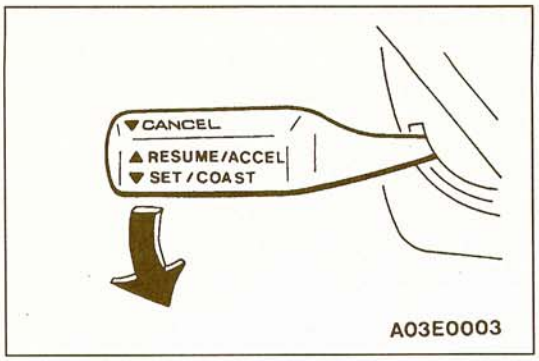


## AUTO-CRUISE CONTROL SWITCH CHECK

17200120068

### Cruise Control Setting Check

(1) Switch ON the main switch.
(2) Drive at the desired speed within the range of approximately 40 – 200 km/h (25–124 mph).
(3) Turn the control switch to the SET position.
(4) Check that when the switch is released the speed is the desired constant speed.

NOTE
If the vehicle speed decreases to approximately 15 km/h (9 mph) below the set speed, because of climbing a hill for example, the cruise control will be canceled.

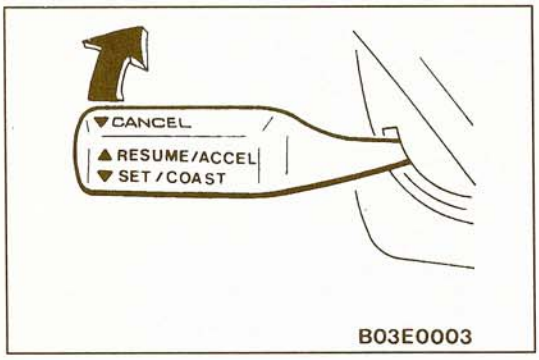


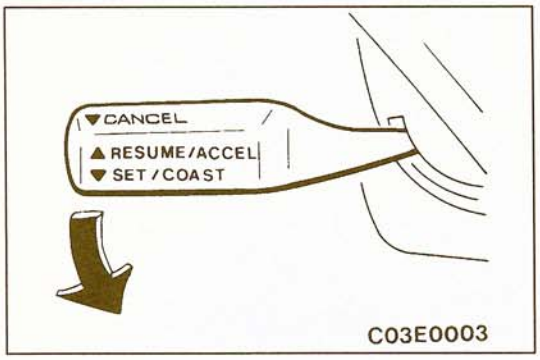


### Speed Increase Setting Check

(1) Set to the desired speed.
(2) Turn the control switch to RESUME.
(3) Check that acceleration continues while the switch is pressed, and that when it is released the constant speed at the time when it was released becomes the driving speed.

NOTE
Even if, during acceleration, the vehicle speed reaches or exceeds the high limit [approximately 200 km/h (124 mph)], acceleration will continue, however, when the switch is released, the set speed ("memorized speed") will become the high limit of the vehicle speed.

### Speed Reduction Setting Check

(1) Set to the desired speed.
(2) Turn the control switch to SET.
(3) Check that deceleration continues while the switch is pressed, and that when it is released the constant speed at the time when it was released becomes the driving speed.

NOTE
When the vehicle speed reaches the low limit [approximately 40 km/h (25 mph)] during deceleration, the automatic speed control will be canceled.

### Auto-cruise Control Cancellation Check and Check of Return to the Set Speed Before Cancellation

(1) Set the cruise speed control.
(2) Check that there is a return to ordinary driving when either of the operations below is performed.

TSB Revision

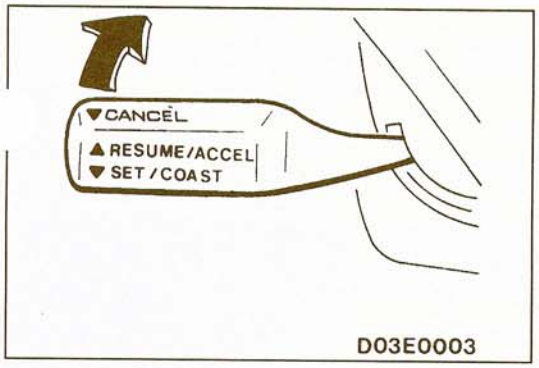


1) The cruise control switch is turned to CANCEL.
2) The brake pedal is depressed.
3) The clutch pedal is depressed. <M/T>
4) The selector lever is at "N". <A/T>

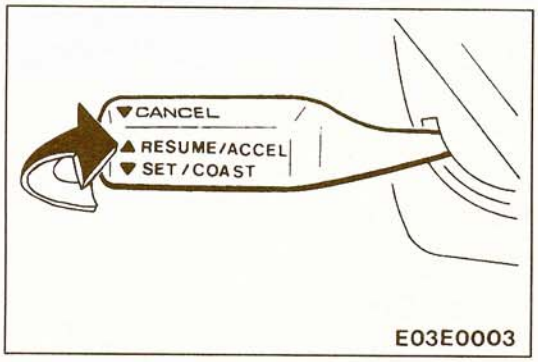


(3) Turn the control switch to RESUME while driving at a vehicle speed of approximately 40 km/h (25 mph) or higher, and check that there is a return to the cruise control speed before the function is canceled and the vehicle travels at a constant speed.
(4) When driving at constant speed, check that the vehicle returns to the normal driving condition when the main switch is turned to OFF.

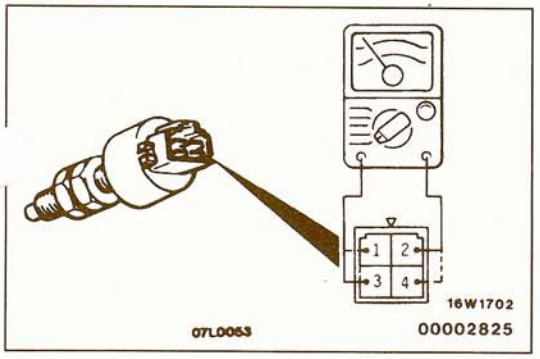


## AUTO-CRUISE CONTROL COMPONENT CHECK

17200170070

### Stop Light Switch/Brake Switch Check

(1) Disconnect the connector.
(2) Check for continuity between the terminals of the switch.

| Measurement conditions | Brake switch terminal | | Stop light switch terminal | |
|---|---|---|---|---|
| Measurement conditions | 1 | 4 | 2 | 3 |
| When brake pedal is depressed | | | ○—○ | |
| When brake pedal is not depressed | ○—○ | | | |

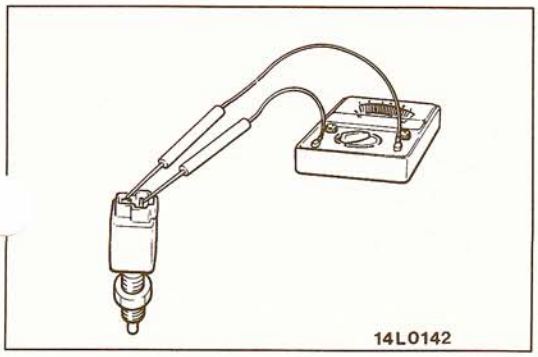


### Clutch Pedal Position Switch Check <M/T>

(1) Disconnect the connector.
(2) Check that there is continuity between the connector terminals when the clutch pedal is depressed.

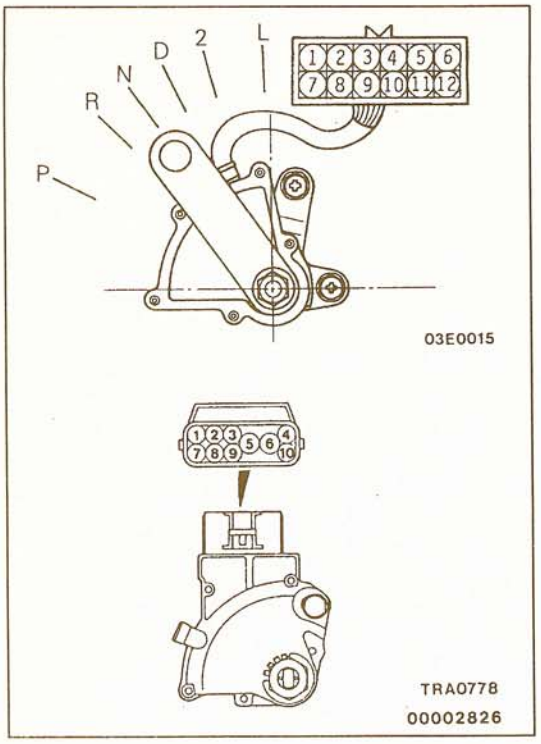


## Park/Neutral Position Switch ("N" position) Check <A/T>

**<3.0L-12 VALVE ENGINE>**

(1) Disconnect the connector.
(2) Check that there is continuity between connector terminals (7) – (12) when the selector lever is moved to the "N" range.

**<3.0L-24 VALVE ENGINE and 3.5L ENGINE>**

(1) Disconnect the connector.
(2) Check to be sure that there is continuity between connector terminals (5) and (6) when the selector lever is moved to the "N" range.

## Throttle Position Sensor Check

Refer to GROUP 13 – On-vehicle service.

## Closed Throttle Position Switch Check

Refer to GROUP 13 – On-vehicle service.

## Vehicle Speed Sensor Check

Refer to GROUP 54–Meters and Gages.

## Auto-cruise Vacuum Pump Check

**<Solenoid valve (Control valve, Release valve)>**

(1) Disconnect the cruise vacuum pump connector.
(2) Measure the resistance between terminals (1)–(2) and between (1)–(3).

**Standard value: 50–60 Ω**

(3) Check that the solenoid valve makes an operating noise when battery positive voltage is applied between terminals (1)–(2) and between (1)–(3).
(4) If there is a malfunction of the solenoid valve, replace the cruise vacuum pump assembly.

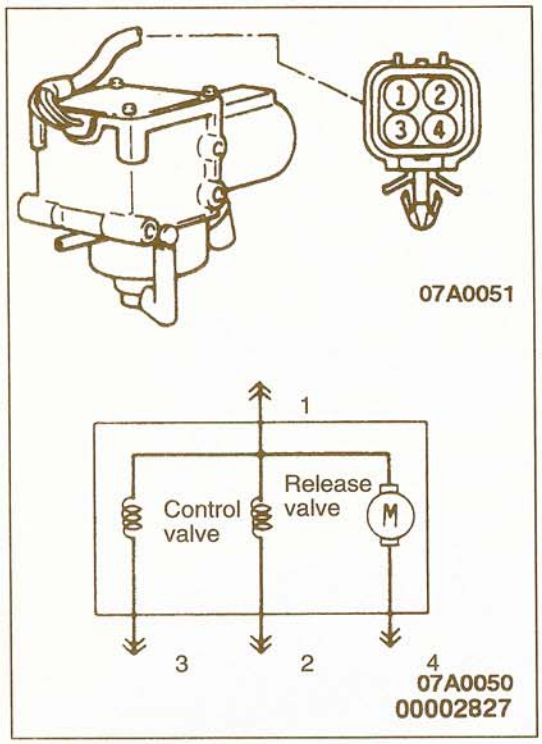


**<Motor>**

(1) Disconnect the cruise vacuum pump connector.
(2) Check that the motor operates when battery positive voltage is applied between terminals (1)–(4).

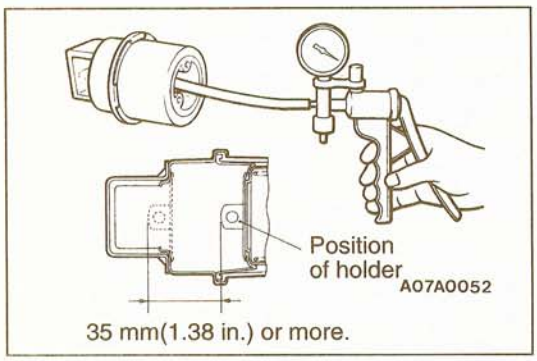


## Actuator Check

(1) Remove the actuator.
(2) Apply negative pressure to the actuator with the vacuum pump and check that the holder moves more than 35 mm (1.38 in.). In addition, check that there is no change in the position of the holder when negative pressure maintained in that condition.
(3) First install the actuator, and then inspect and adjust the cruise control cable. (Refer to P. 17-21.)

TSB Revision

# AUTO-CRUISE CONTROL

17200140064

## REMOVAL AND INSTALLATION <LINK AND ACTUATOR>

**Post-installation Operation**
- Control Cables Adjustment (Refer to P.17-21.)

**<Except 3.0L-24 VALVE ENGINE for California>**

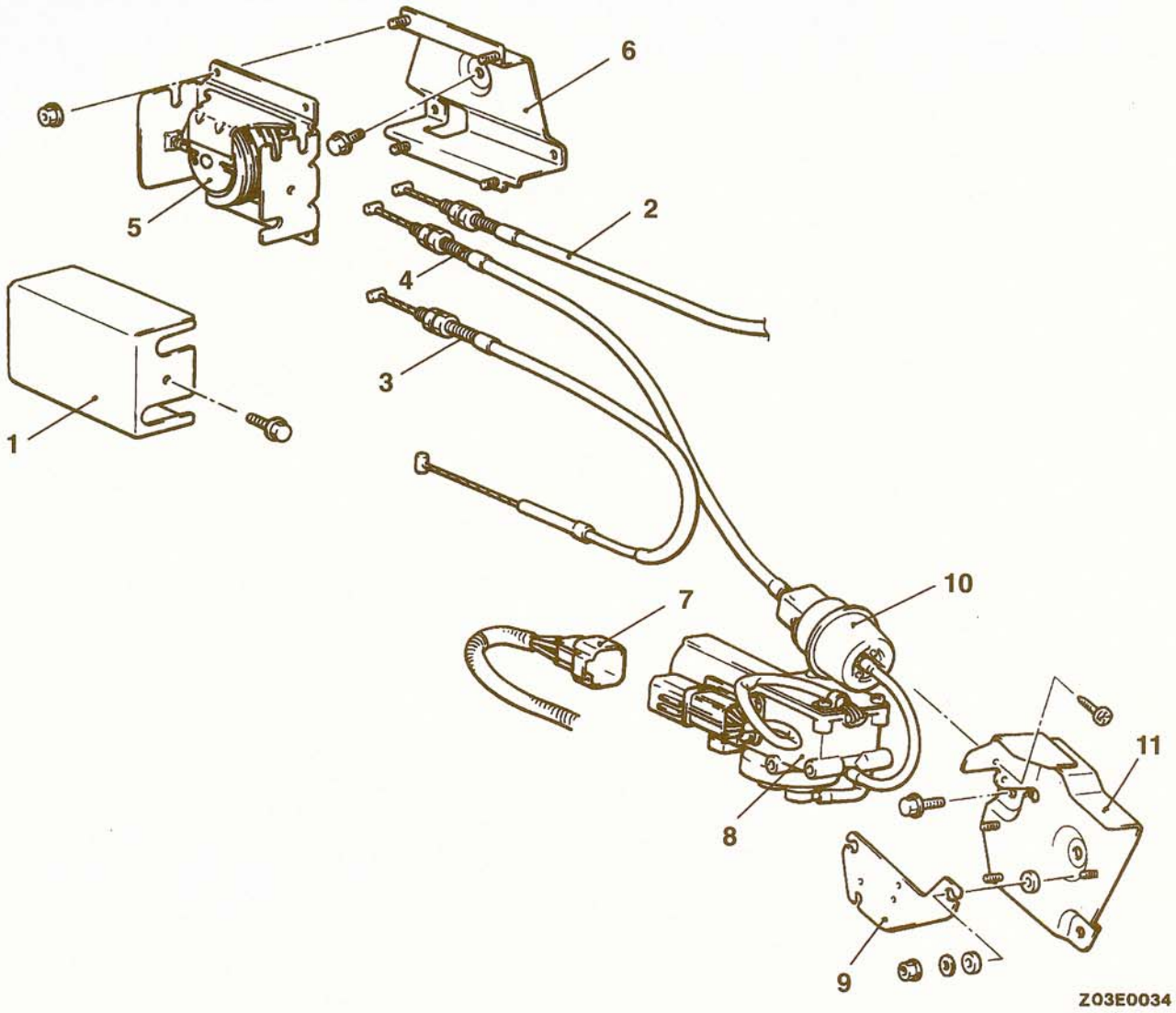


**Intermediate link removal steps**
1. Link protector
2. Accelerator cable and link connection
3. Throttle cable and link connection
4. Cruise control cable and link connection
5. Intermediate link
6. Link bracket

**Actuator removal steps**
4. Cruise control cable and link connection
7. Wiring connector
8. Vacuum pump
9. Pump bracket
10. Actuator
11. Actuator bracket

**TSB Revision**

**<3.0L-24 VALVE ENGINE for California>**

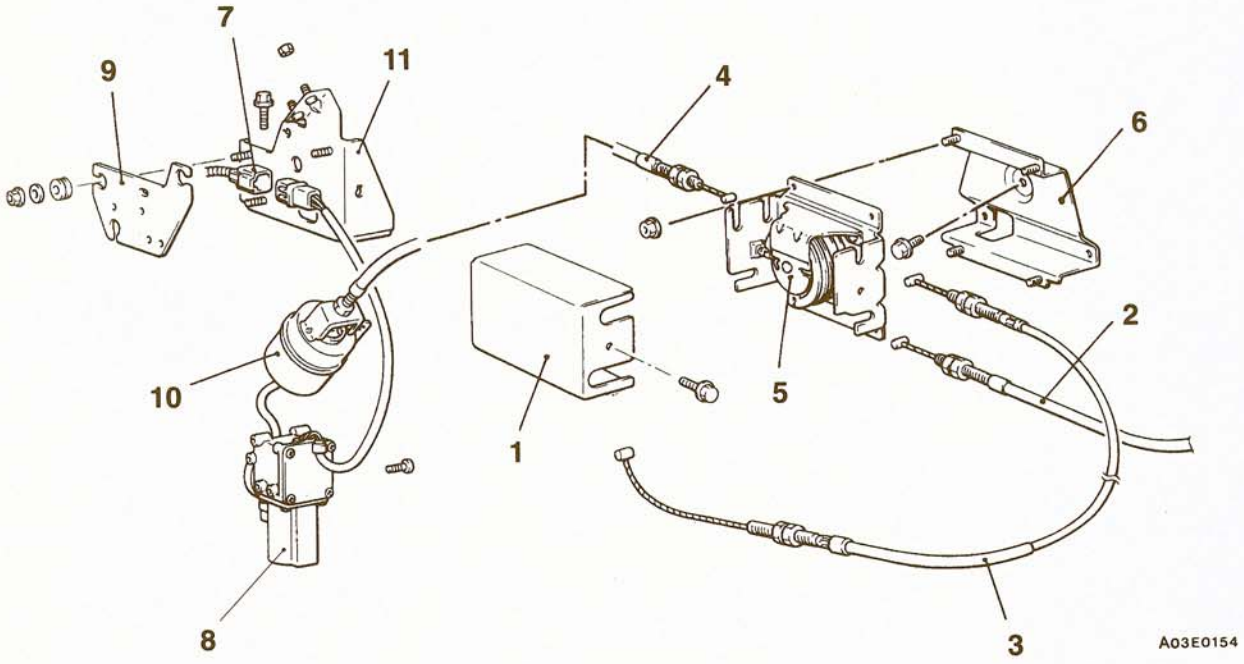


**Intermediate link removal steps**

1. Link protector
2. Accelerator cable and link connection
3. Throttle cable and link connection
4. Cruise control cable and link connection
5. Intermediate link
6. Link bracket

**Actuator removal steps**

4. Cruise cable and link connection
7. Wiring connector
8. Vacuum pump
9. Pump bracket
10. Actuator
11. Actuator bracket

**TSB Revision**

## REMOVAL AND INSTALLATION <SWITCHES, CONTROL UNIT AND SENSORS>

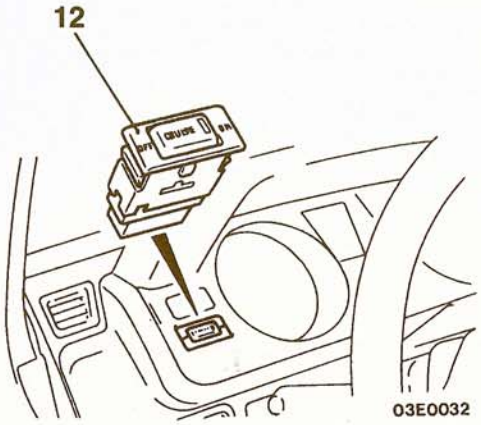


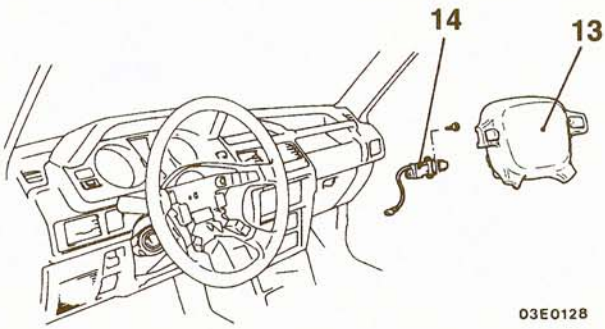


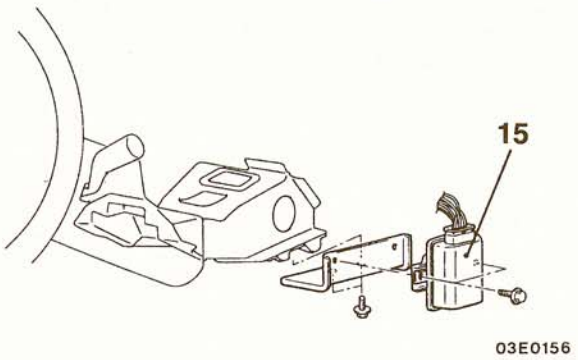


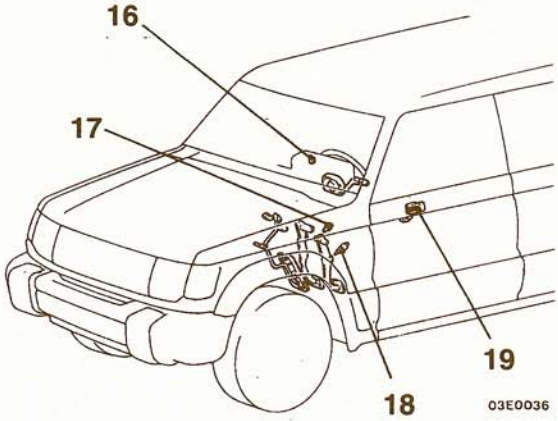


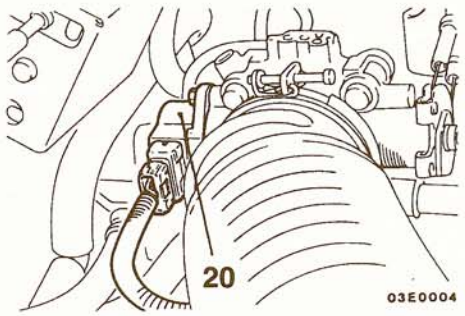


00004034

### Removal steps of switches

**CAUTION: SRS**
**Before removal of air bag module, refer to GROUP 52B – SRS Service Precautions and GROUP 52B – Air Bag Module and Clock Spring.**

12. Main switch
13. Air bag module (Refer to GROUP 52B – Air Bag Module and Clock Spring.)
14. Control switch

### Removal steps of control unit

- Instrument panel (Refer to GROUP 52 – Instrument Panel.)

15. Control unit

### Removal steps of sensors

16. Vehicle speed sensor (reed switch) (Refer to GROUP 54 – Meters and Gages.)
17. Stop light switch
18. Clutch pedal position switch <M/T>
19. Park/Neutral position switch <A/T>
20. TPS (Throttle position sensor)

**TSB Revision**

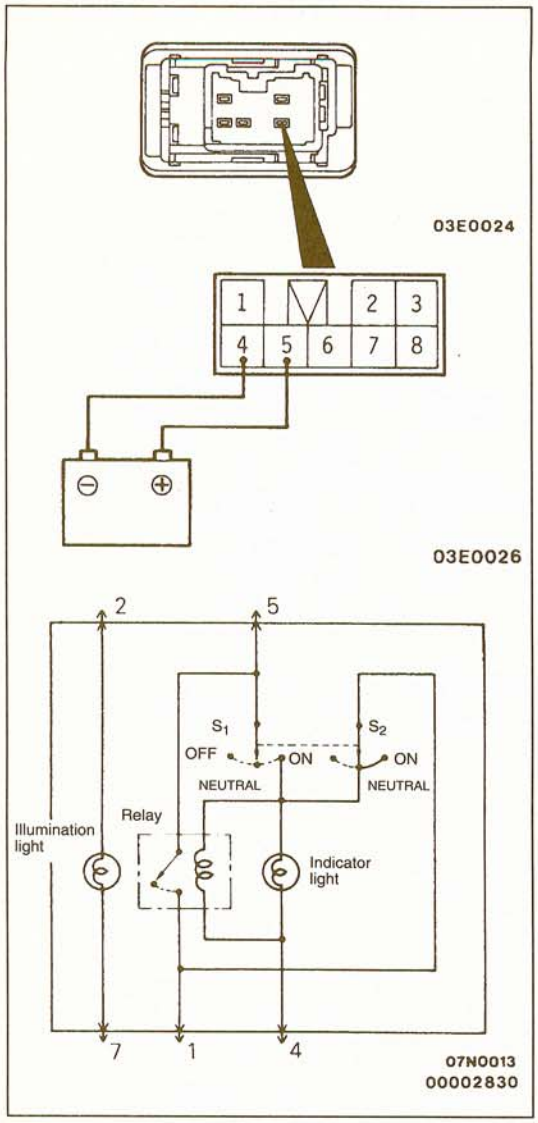


## INSPECTION

17200110072

### AUTO-CRUISE CONTROL MAIN SWITCH CHECK

(1) Operate the main switch and check the continuity betwe the terminals.

| Switch state | Terminal | | | | | |
|---|---|---|---|---|---|---|
| Switch state | 2 | Illu-mina-tion | 7 | 5 | 1 | 4 |
| Pressed to OFF | ○ | ⌒ | ○ | | | |
| Neutral position | ○ | ⌒ | ○ | | ○ | ○ |
| Pressed to ON | ○ | ⌒ | ○ | ○ | | ○ |

(2) Connect the positive battery terminal to terminal (5) and the negative battery terminal to terminal (4), and then check that there is battery positive voltage between terminal (1) and the ground when the main switch is turned to ON and during the period before it is turned to OFF. Check that the battery positive voltage between terminal (1) and the ground is reduced to 0 V when the main switch is turned to OFF.

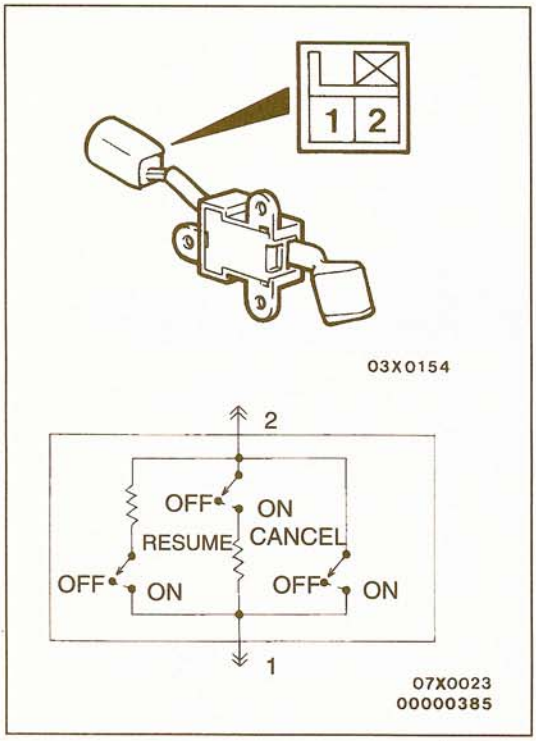


### AUTO-CRUISE CONTROL SWITCH CHECK

17200120075

(1) Remove the steering column lower cover.
(2) Disconnect the connector of the control switch and operate the control switch to measure the resistance between the individual terminals.
If the readings are as shown below, the control switch may be considered good.

| Switch operation | Resistance between terminals |
|---|---|
| When the switch is not operated | No continuity |
| When the switch is turned to CANCEL | Approx. 0 Ω |
| When the switch is turned to RESUME | Approx. 820 Ω |
| When the switch is turned to SET | Approx. 2,700 Ω |

**TSB Revision**

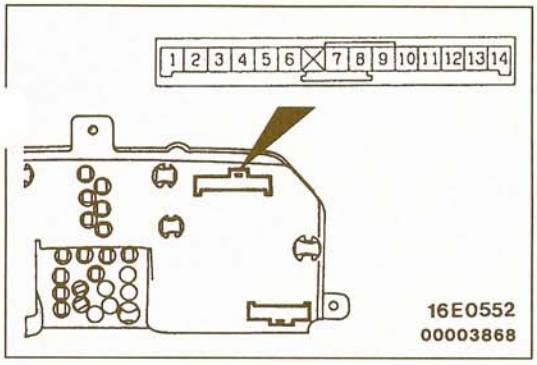


## AUTO-CRUISE CONTROL INDICATOR LIGHT CHECK

17200190038

(1) Remove the combination meter. (Refer to GROUP 54 – Combination meter.)
(2) Check the continuity between terminals (4) and (5).
If there is no continuity, replace the auto-cruise control indicator bulb.

## CLOCK SPRING CHECK

17200180035

Refer to GROUP 52B – Air Bag Module and Clock Spring.

# ENGINE EMISSION CONTROL

17300020026

## GENERAL SPECIFICATIONS

| | | |
|---|---|---|
| Positive crankcase ventilation system | | Closed type with positive crankcase ventilation valve |
| Evaporative emission control system (Canister storage type) | Canister | Charcoal type |
| | Evaporative emission purge solenoid | Duty cycle solenoid valve |
| Exhaust gas recirculation system <SOHC – Federal, DOHC> | EGR valve | Vacuum-activated diaphragm type |
| | EGR solenoid | Duty cycle solenoid valve |
| Three-way catalytic converter | | Monolith type |

## SERVICE SPECIFICATIONS

17300030111

| Items | Specifications |
|---|---|
| Evaporative emission purge solenoid coil resistance Ω <SOHC-Federal, DOHC> | 36 – 44 [at 20°C (68°F)] |
| Evaporative emission purge solenoid No.1 coil resistance Ω <SOHC-California> | 62 – 74 [at 20°C (68°F)] |
| Evaporative emission purge solenoid No.2 coil resistance Ω <SOHC-California> | 36 – 44 [at 20°C (68°F)] |
| EGR solenoid coil resistance <SOHC-Federal> Ω | 62 – 74 [at 20°C (68°F)] |
| EGR solenoid coil resistance <DOHC> Ω | 36 – 44 [at 20°C (68°F)] |

# TROUBLESHOOTING

17300070069

| Trouble Symptom | Probable Cause | Remedy |
|---|---|---|
| Engine will not start or is hard to start | Disconnected or damaged vacuum hoses | Repair or replace |
| | The EGR valve is not closed. | Repair or replace |
| | Malfunction of evaporative emission purge solenoid | Repair or replace |
| Rough idle or engine stalls | Disconnected or damaged vacuum hoses | Repair or replace |
| | The EGR valve is not closed. | Repair or replace |
| | Malfunction of positive crankcase ventilation system | Replace |
| | Malfunction of purge control system | Check the system. If there is a problem, check its component parts. |
| Excessive oil consumption | Clogged positive crankcase ventilation line | Check the positive crankcase ventilation system |
| Engine hesitates or poor acceleration | Malfunction of the exhaust gas recirculation system | Check the system; if there is a problem, check its component parts. |
| Poor fuel mileage | Malfunction of the exhaust gas recirculation system | Check the system; if there is a problem, check its component parts. |

# VACUUM HOSES

17300090126

## VACUUM HOSE ROUTING

**<SOHC-12 valve engine>**

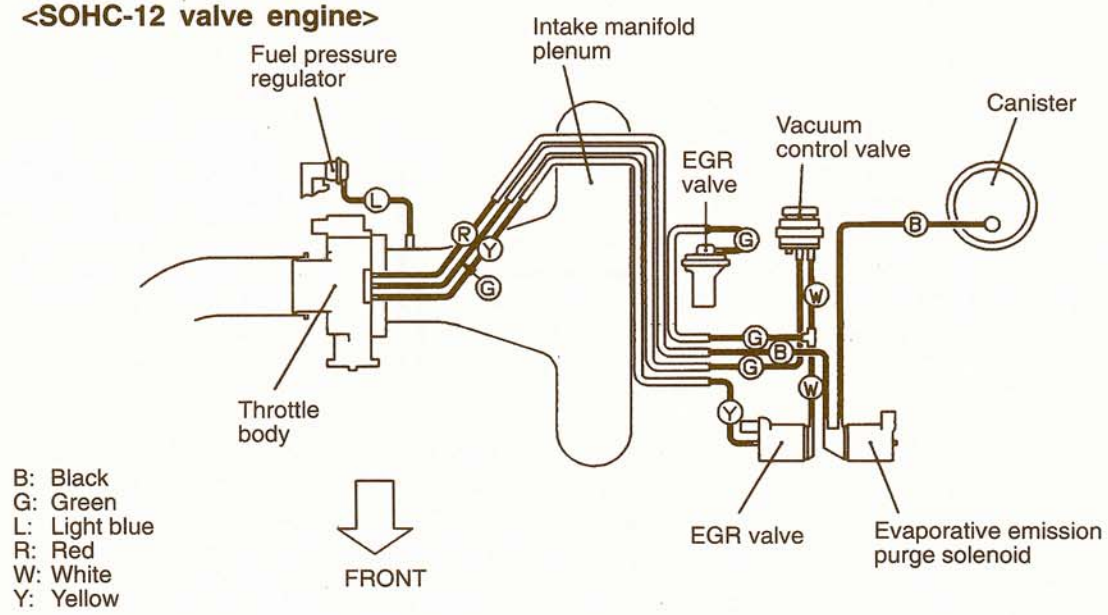


7EM0409

**<SOHC-24 valve engine – Federal>**

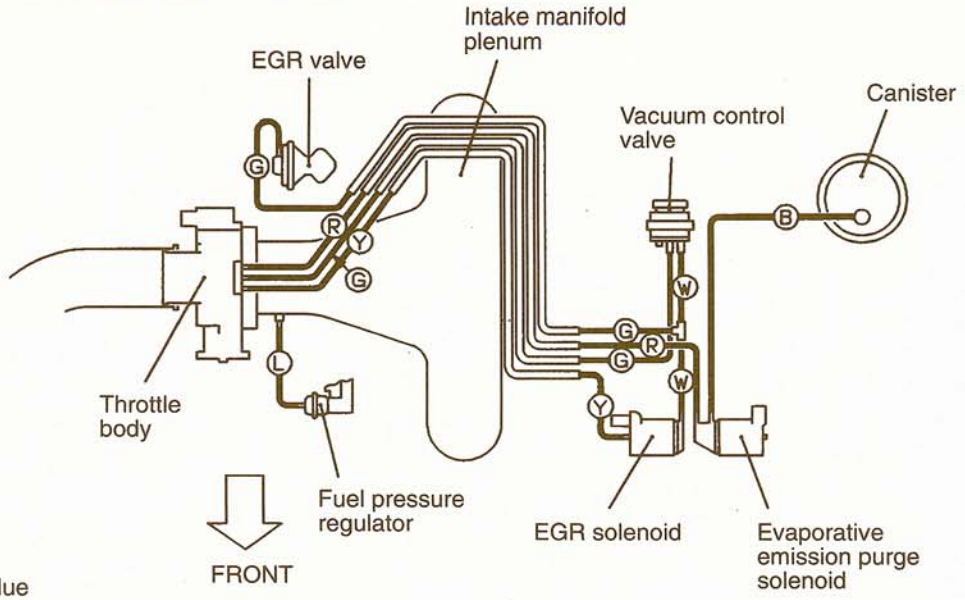


**<SOHC-24 valve engine – California>**

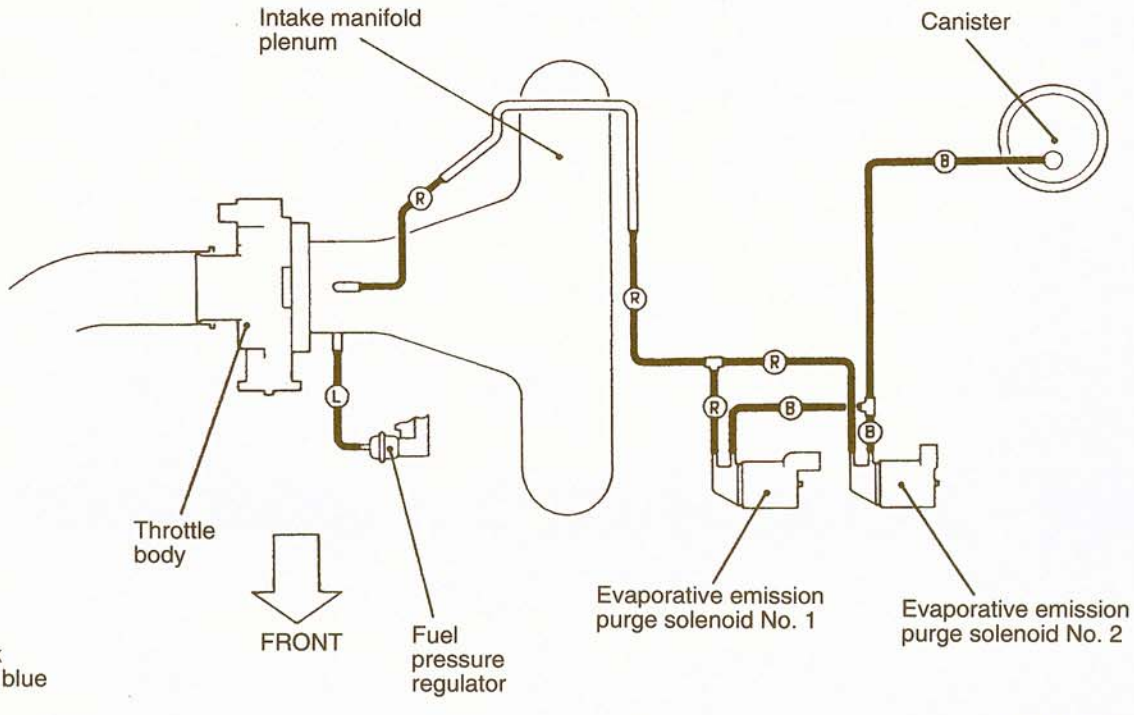

<DOHC>

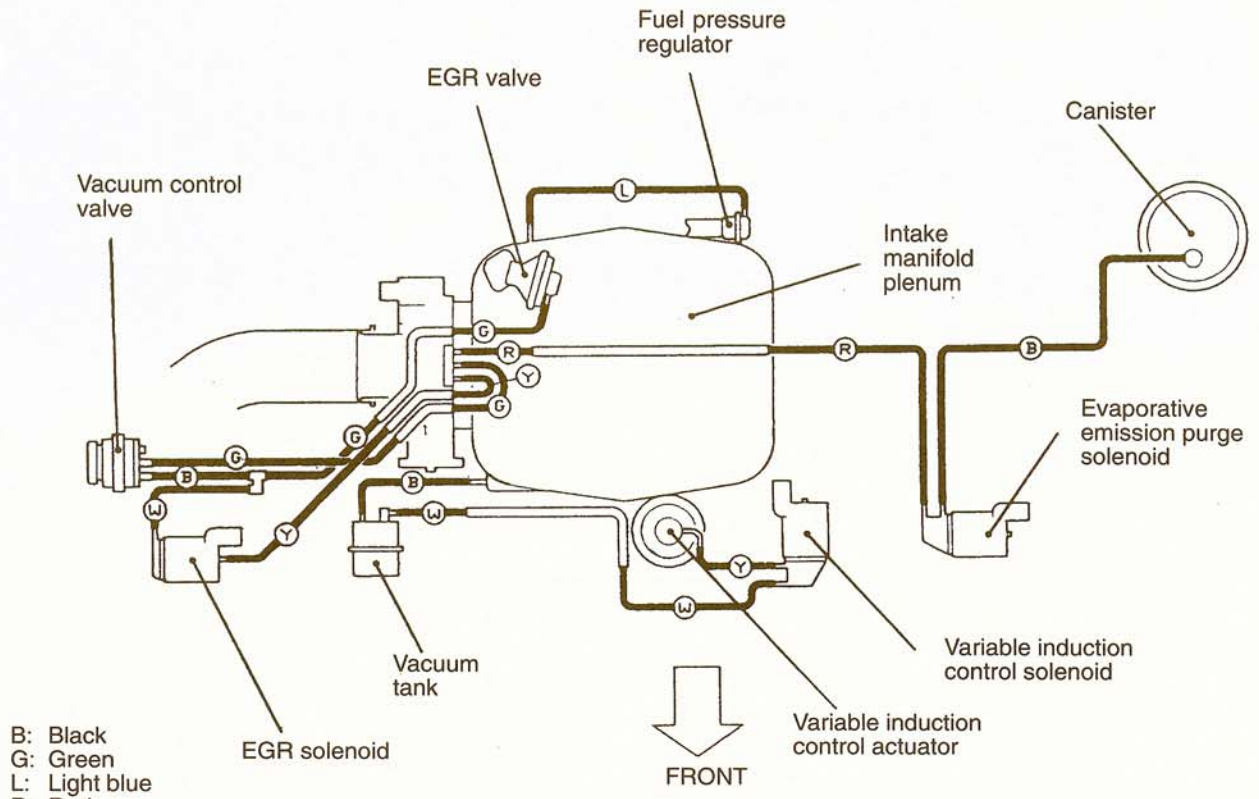


7EM0330

## VACUUM CIRCUIT DIAGRAM

### <SOHC-12 valve engine>

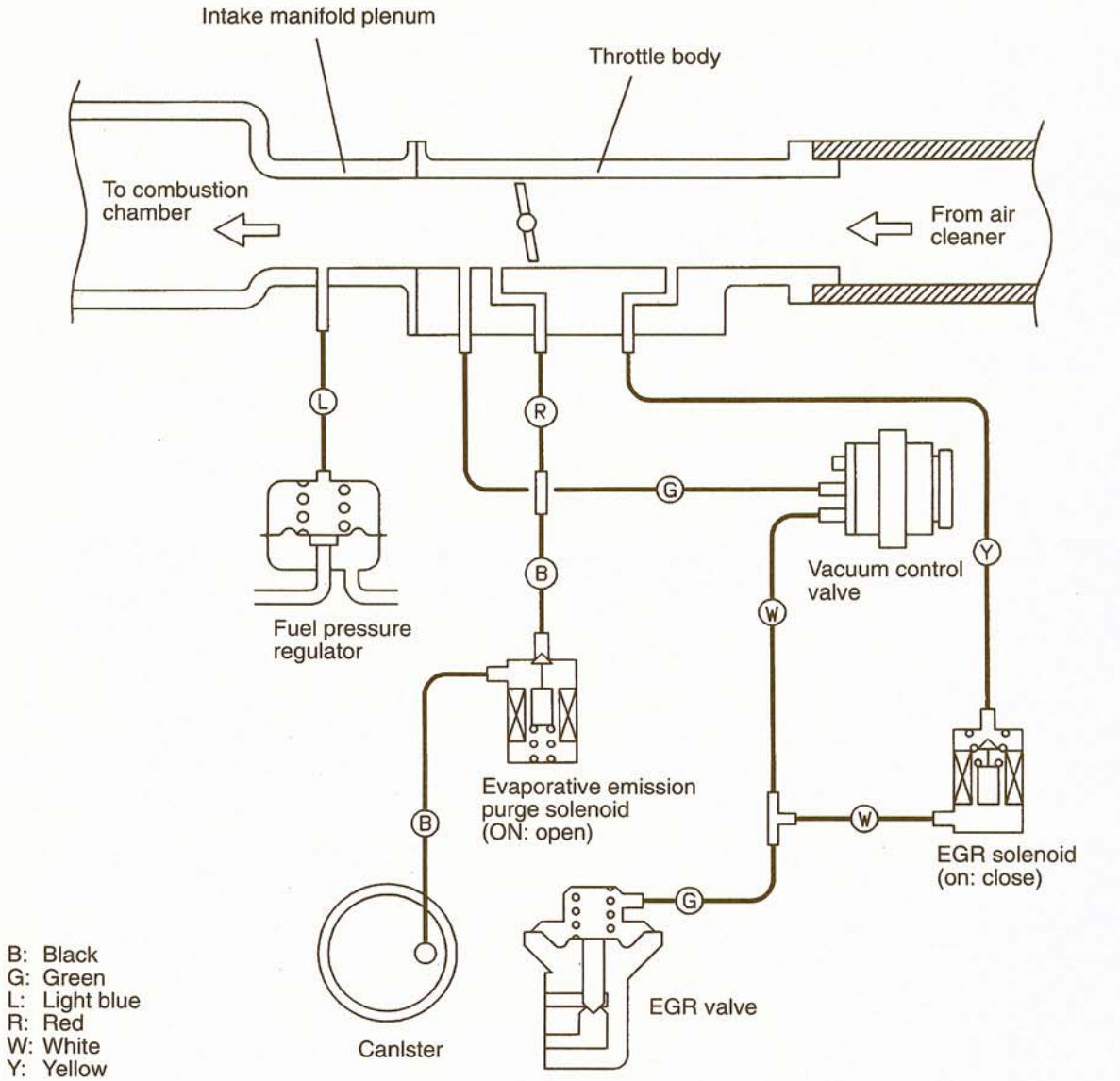

**<SOHC-24 valve engine – Federal>**

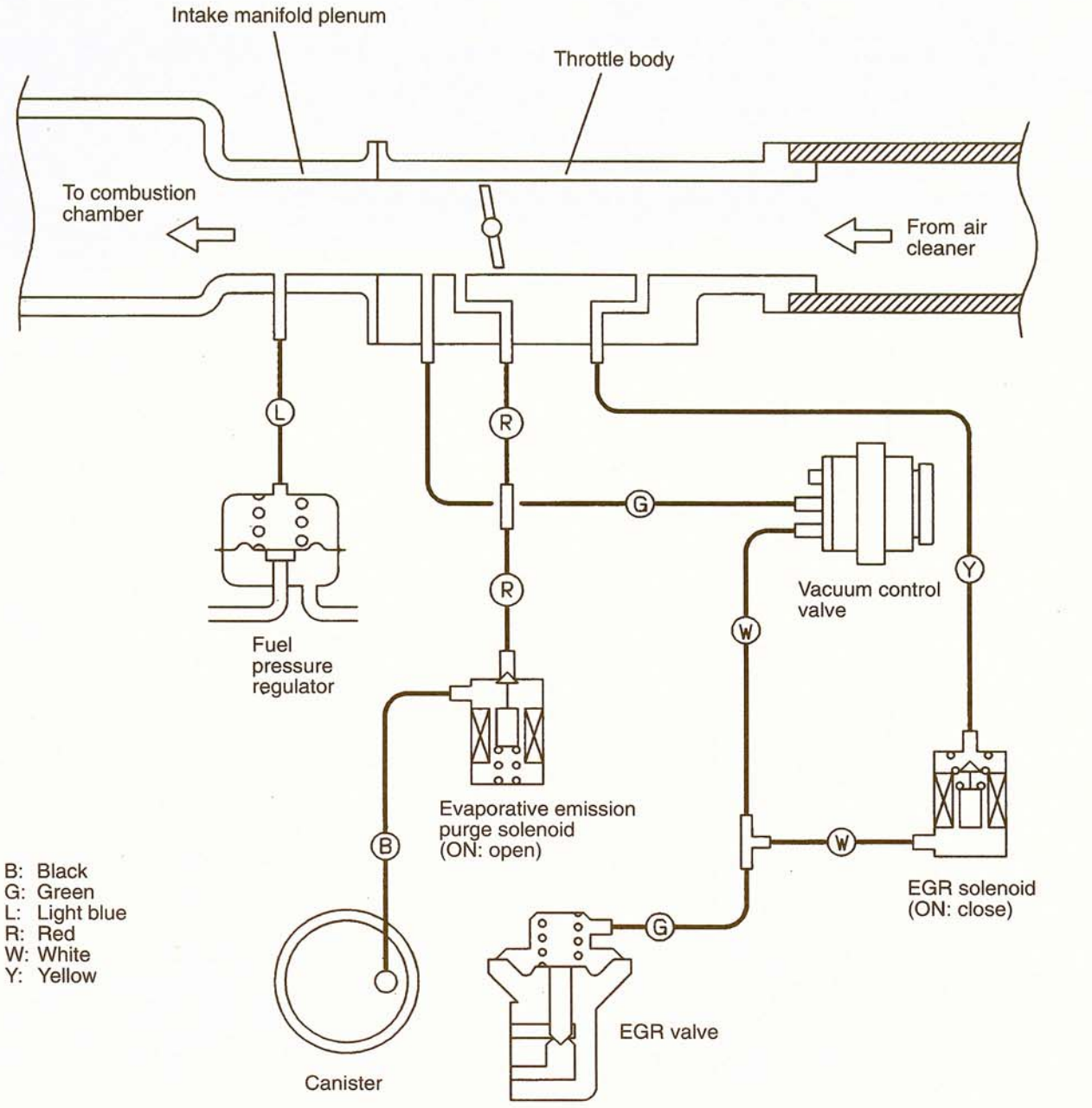

**<SOHC-24 valve engine – California>**

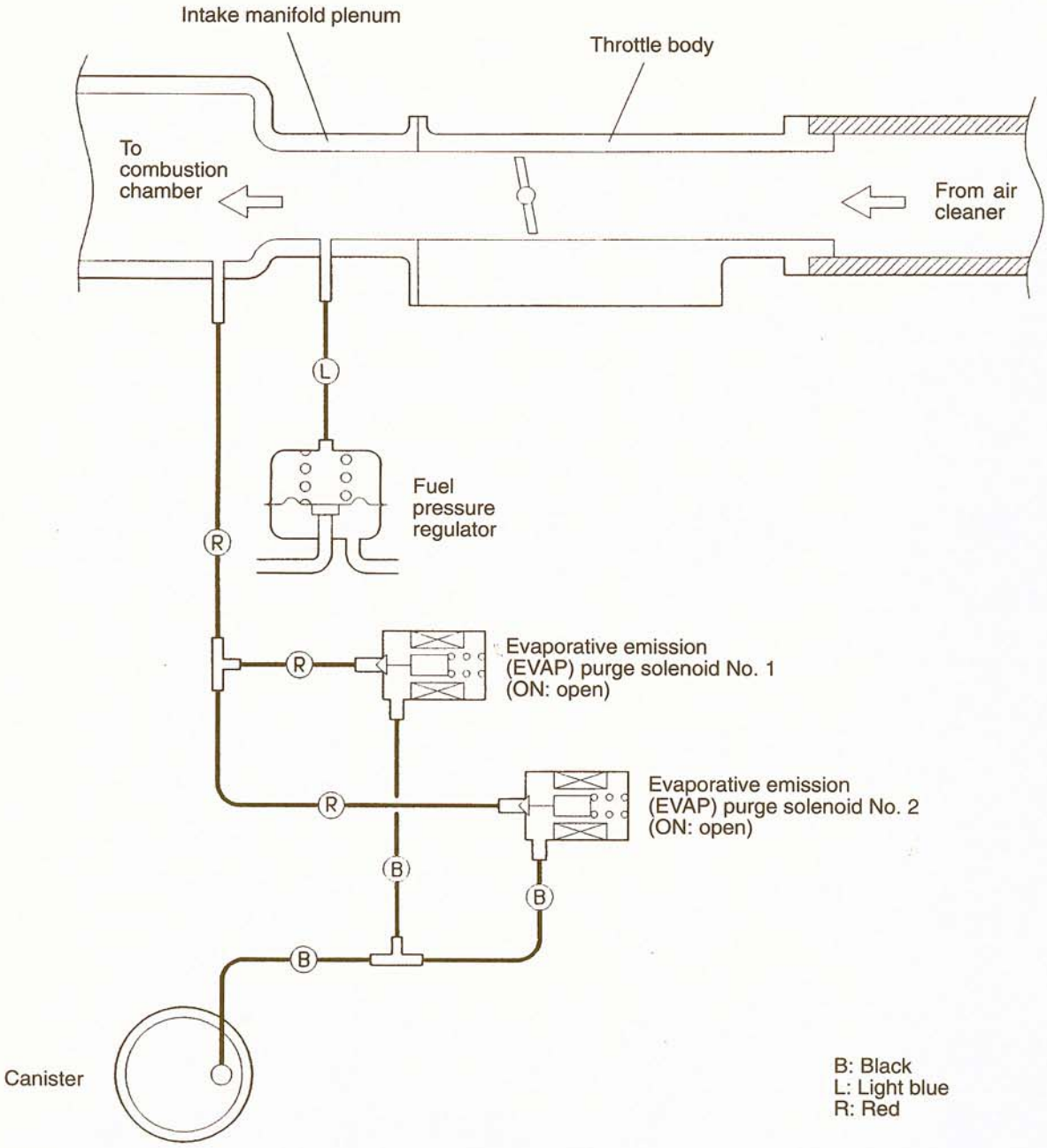


**TSB Revision**

<DOHC>

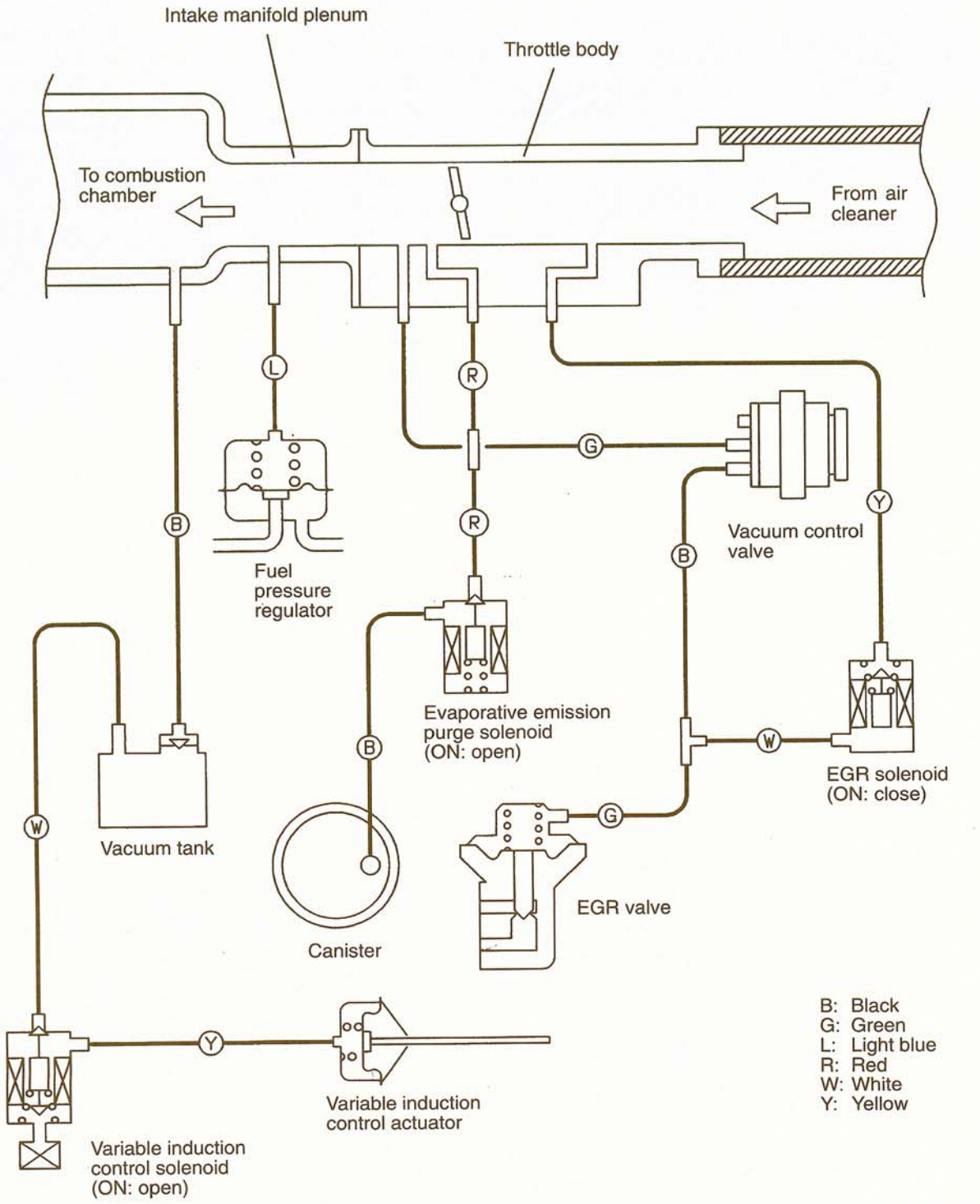


7EM0413

### VACUUM HOSE CHECK

(1) Referring to the VACUUM HOSES ROUTING, confirm that the vacuum hoses are properly connected.
(2) Check the hoses for irregularities (disconnection, loose ness, etc.) and confirm that there is no breakage or damage.

### VACUUM HOSE INSTALLATION

(1) When connecting a hose, firmly press it onto the nipple.
(2) Referring to the VACUUM HOSES ROUTING, connect the hoses correctly.

# POSITIVE CRANKCASE VENTILATION SYSTEM

17300500100

## COMPONENT LOCATION

<SOHC>

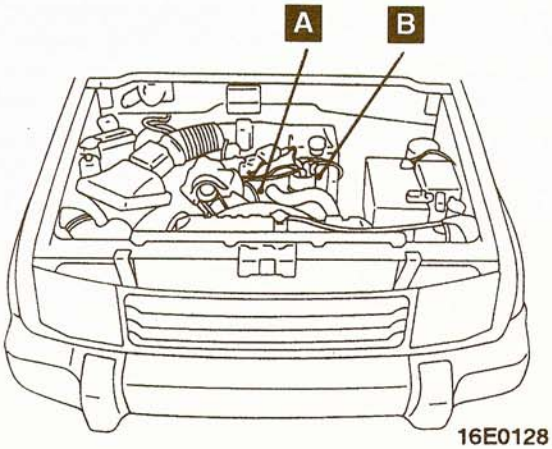


16E0128

<DOHC>

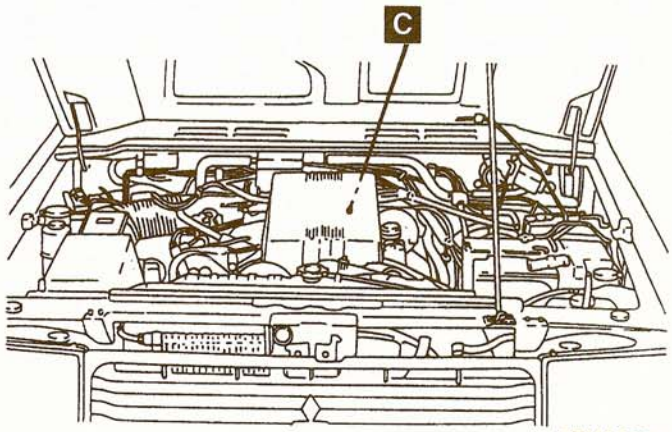


7FU1480
7FU1865

| Name | Symbol | Name | Symbol |
|---|---|---|---|
| Positive crankcase ventilation valve <SOHC-12 valve engine> | A | Positive crankcase ventilation valve <SOHC-24 valve engine> | B |
| Positive crankcase ventilation valve <DOHC> | C | – | – |

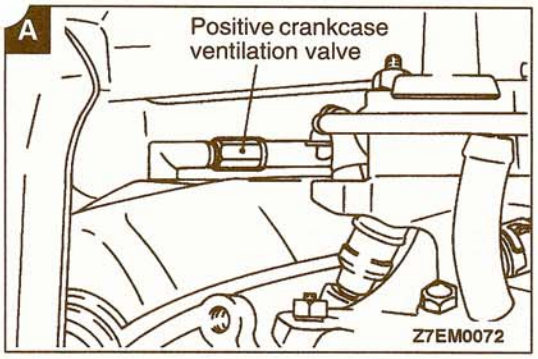


Z7EM0072

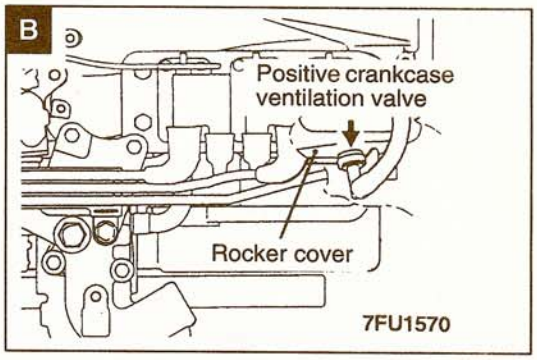


7FU1570

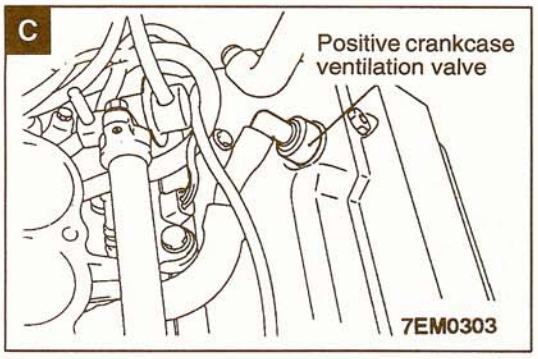


7EM0303

TSB Revision

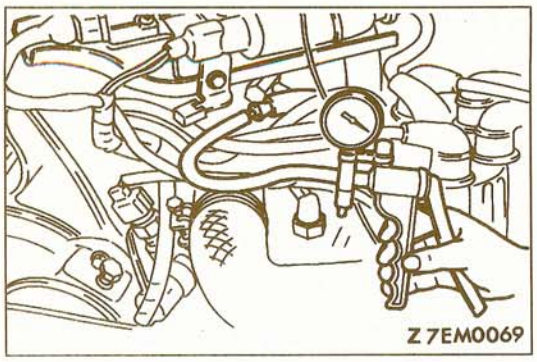


## CRANKCASE VENTILATION SYSTEM CHECK

17300110105

**<SOHC-12 valve engine>**

(1) Disconnect the ventilation hose from the intake manifold plenum, and connect a hand vacuum pump to the ventilation hose.
(2) At this time, check that there is leakage when negative pressure is applied. If there is no leakage when negative pressure is applied, either clean the positive crankcase ventilation valve or replace it.

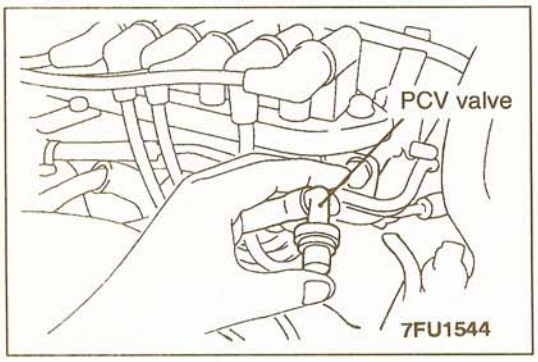


**<SOHC-24 valve engine>**

(1) Disconnect the ventilation hose from the positive crankcase ventilation (PCV) valve.
(2) Remove the PCV valve from the rocker cover.
(3) Reconnect the ventilation hose to the PCV valve.
(5) Place a finger against the opening of the PCV valve and check that you can feel the negative pressure from the intake manifold.
(5) Place a finger against the opening of the PCV valve and check that you can feel the negative pressure from the intake manifold.

NOTE
The plunger inside the PCV valve will move back and forth at this time.

(6) If negative pressure cannot be felt, clean or replace the PCV valve.

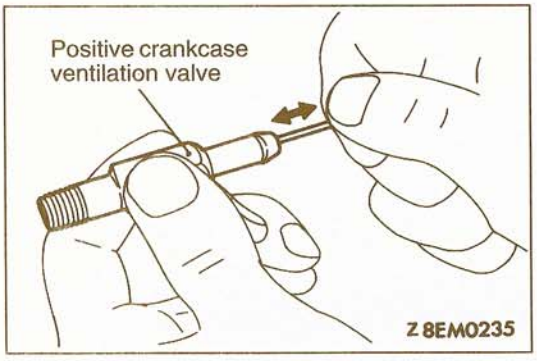


## POSITIVE CRANKCASE VENTILATION VALVE CHECK

17300120108

**<SOHC-12 valve engine>**

(1) Remove the intake manifold plenum.
(2) Remove the positive crankcase ventilation valve.
(3) Insert a thin stick into the positive crankcase ventilation valve from the threaded side to check that the plunger moves.
(4) If the plunger does not move, the positive crankcase ventilation valve is clogged. Clean it or replace.
(5) Install the positive crankcase ventilation valve and tighten it to the specified torque.

**Specified tightening torque: 10 Nm (7.2 ft.lbs.)**

(6) Install the intake manifold plenum.

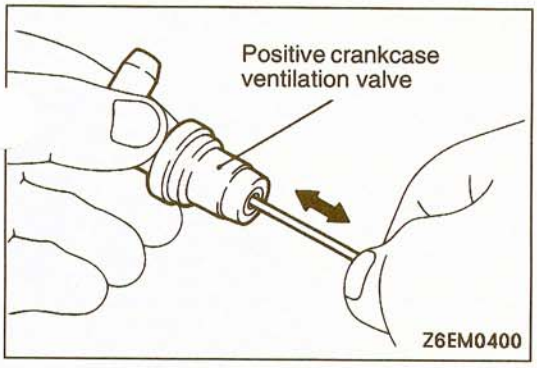


**<DOHC, SOHC-24 valve engine>**

(1) Remove the intake manifold plenum. <DOHC>
(2) Remove the positive crankcase ventilation valve from the rocker cover.
(3) Insert a thin stick into the positive crankcase ventilation valve from the threaded side to check that the plunger moves.
(4) If the plunger does not move, the positive crankcase ventilation valve is clogged. Clean it or replace.
(5) Install the positive crankcase ventilation valve.
(6) Install the intake manifold plenum. <DOHC>

# EVAPORATIVE EMISSION CONTROL SYSTEM

17300510158

## COMPONENT LOCATION <SOHC>

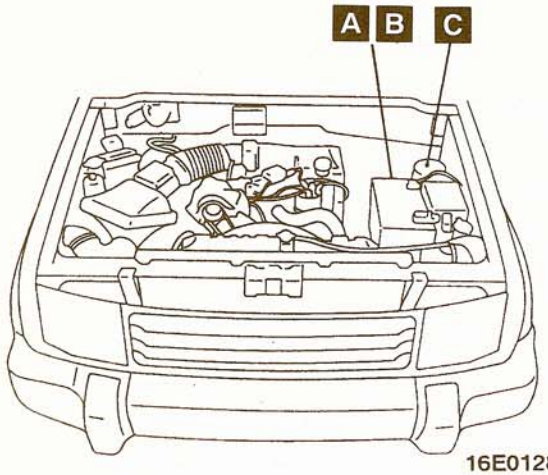


16E0128

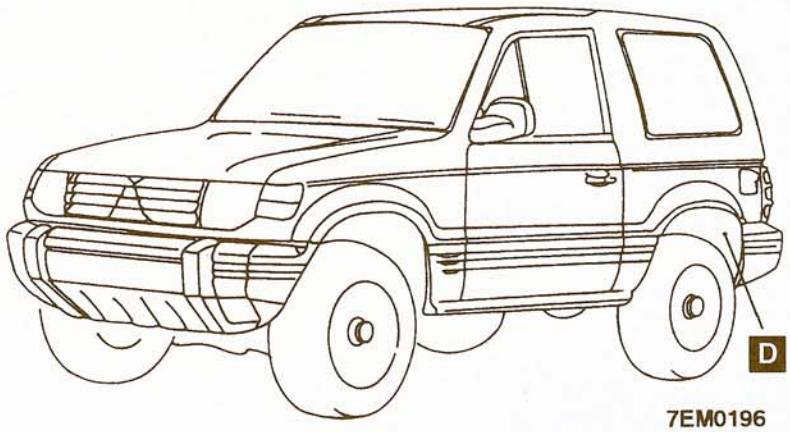


7EM0196

7EM0342

| Name | Symbol | Name | Symbol |
|---|---|---|---|
| Canister | C | Evaporative emission purge solenoid <California> | B |
| Evaporative emission purge solenoid <Federal> | A | Fuel tank pressure relief valve | D |

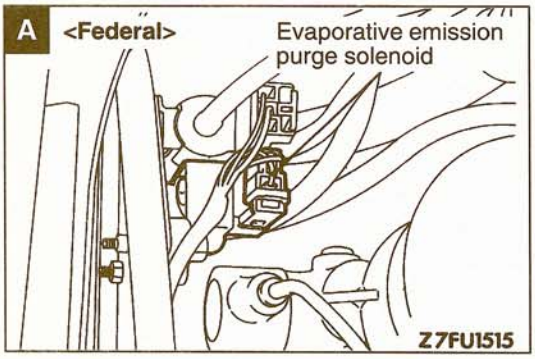


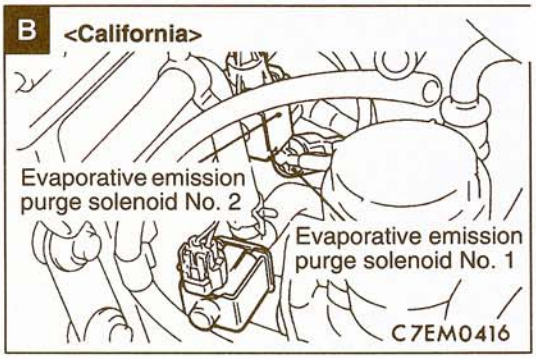


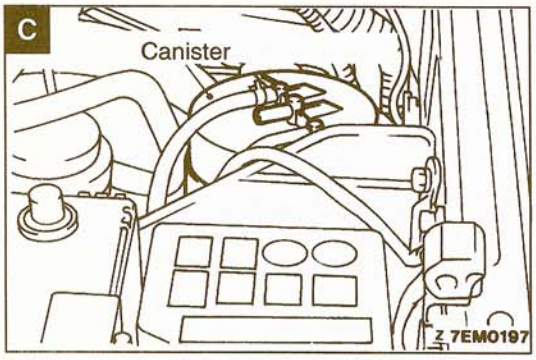


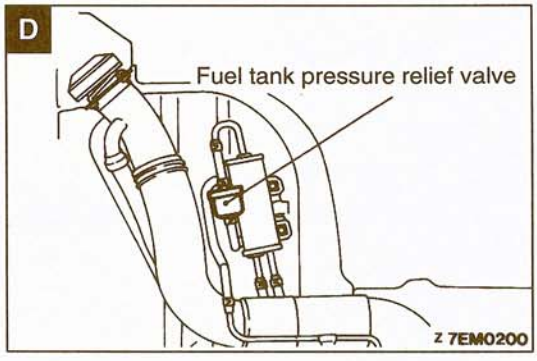


TSB Revision

## COMPONENT LOCATION <DOHC>

17300510165

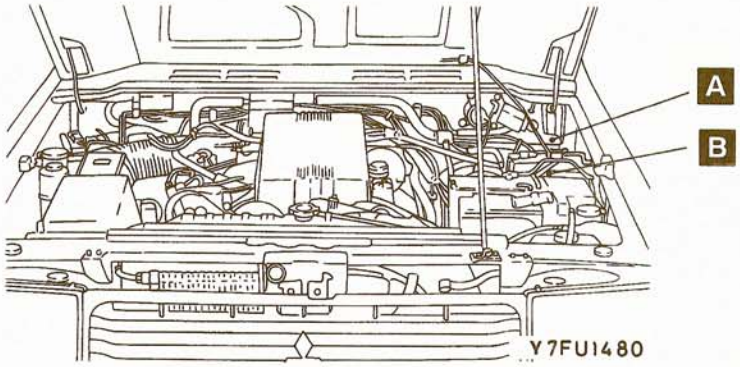


| Name | Symbol |
|---|---|
| Canister | A |
| Evaporative emission purge solenoid | B |

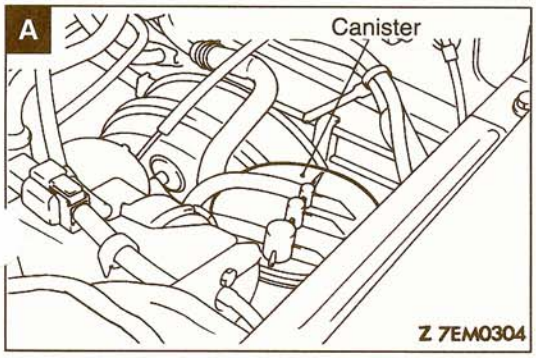


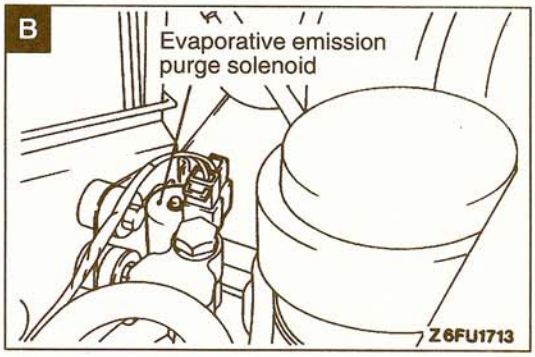


| TSB Revision |
|---|

## PURGE CONTROL SYSTEM CHECK <DOHC, SOHC – Federal>

17300140135

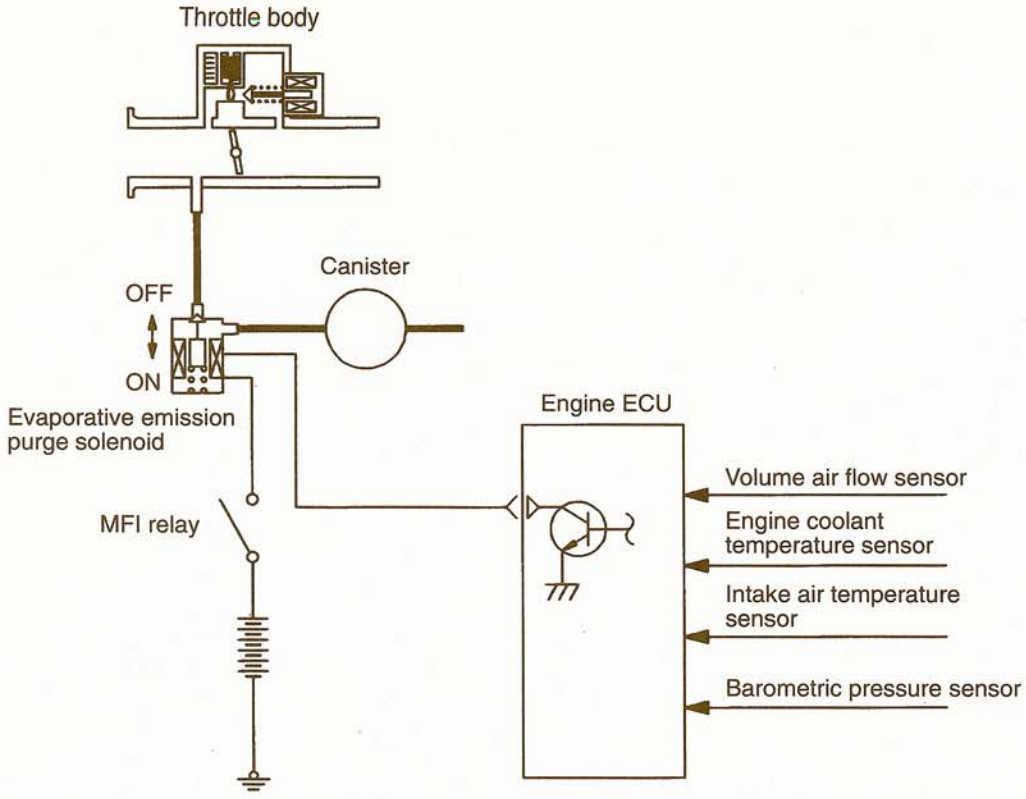

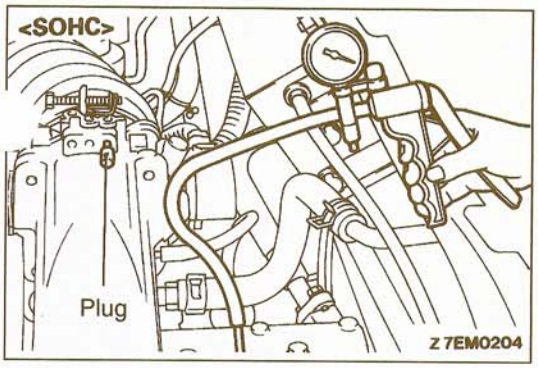


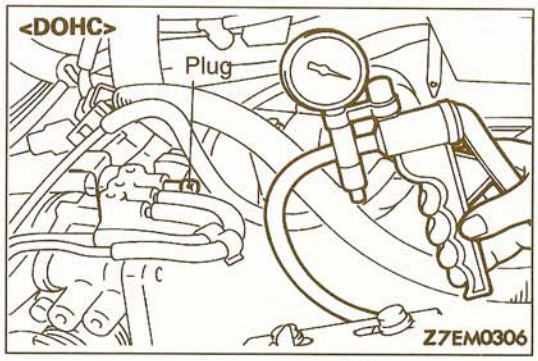


(1) Disconnect the vacuum hose (red stripe) from the throttle body, and connect a hand vacuum pump to the vacuum hose.
(2) Plug the nipple from which the vacuum hose was disconnected.
(3) Under the engine conditions described below, provide a vacuum by using the hand vacuum pump, and then check.

**When engine is cold–Coolant temperature: 40°C (104°F) or less**

| Engine operating condition | Applying negative pressure | Result |
|---|---|---|
| Idling | 50 kPa (14 in.Hg) | Vacuum is maintained |
| 3,000 r/min. | | |

**When engine is warm–Coolant temperature: 80°C (176°F) or higher**

| Engine operating condition | Applying negative pressure | Result |
|---|---|---|
| Idling | 50 kPa (14 in.Hg) | Vacuum is maintained |
| Within 3 minutes after engine starts 3,000 r/min. | Try applying vacuum | Vacuum leaks |
| After 3 minutes have passed after engine start 3,000 r/min. | 50 kPa (14 in.Hg) | Vacuum will be maintained momentarily, after which it will leaks. |

## PURGE CONTROL SYSTEM CHECK <SOHC – California>

17300140142

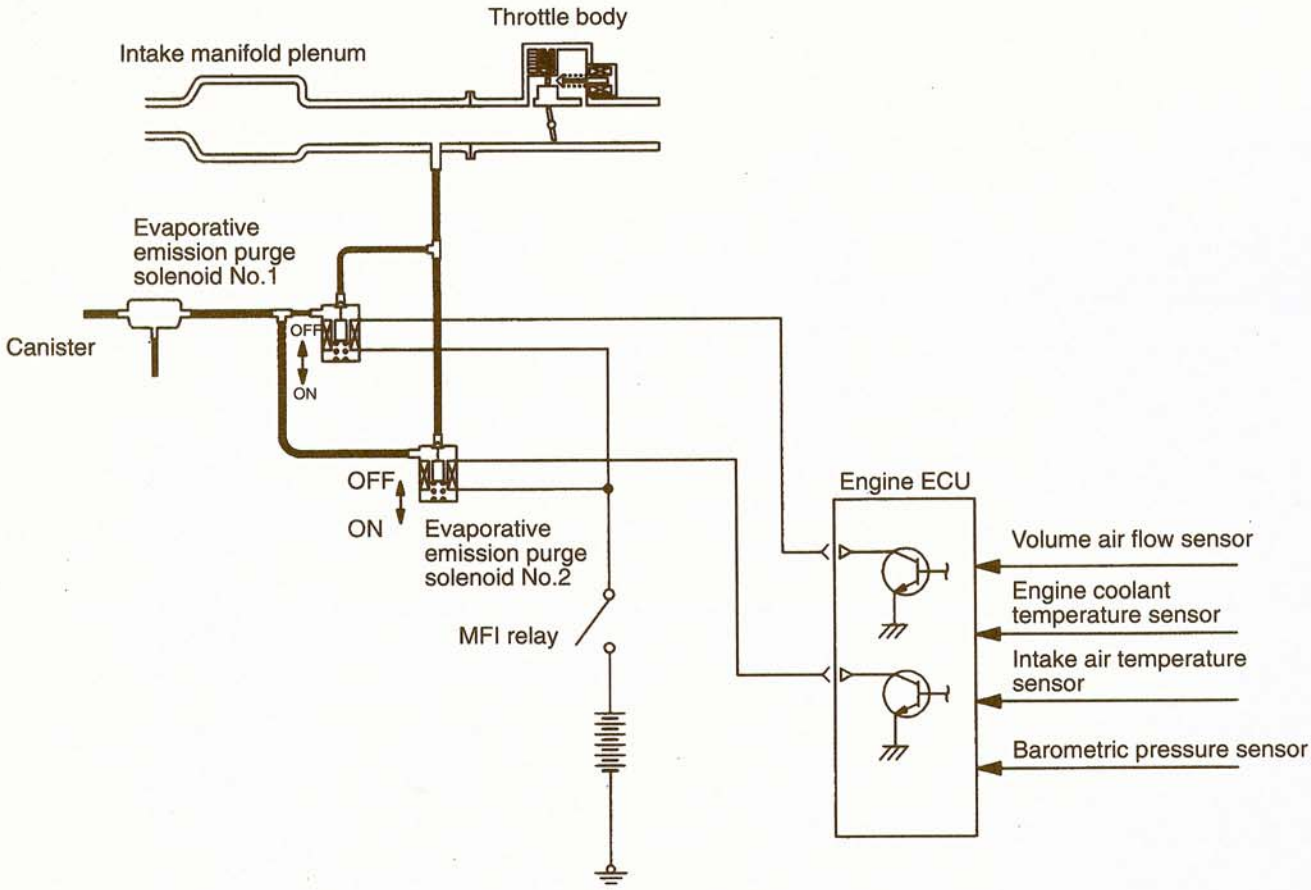


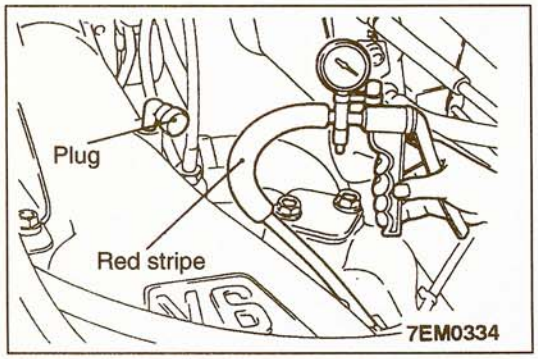


(1) After the engine has warmed up, stop the engine.
(2) Disconnect the vacuum hose (red stripe) from the intake air plenum and connect it to a hand vacuum pump.
(3) Plug the nipple from which the vacuum hose was removed.

(4) Disconnect the connector from evaporative emission purge solenoid No. 2.

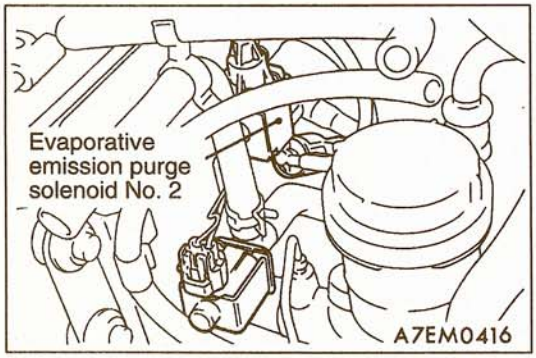


(5) Apply negative pressure and check the negative pressure condition.

| Vacuum | Engine status | Normal condition |
|---|---|---|
| 53 kPa (15.7 in.Hg) | Idling | Negative pressure leaks (after a few seconds have passed since the engine was started) |

(6) Connect the connector to evaporative emission purge solenoid No. 2.

**TSB Revision**

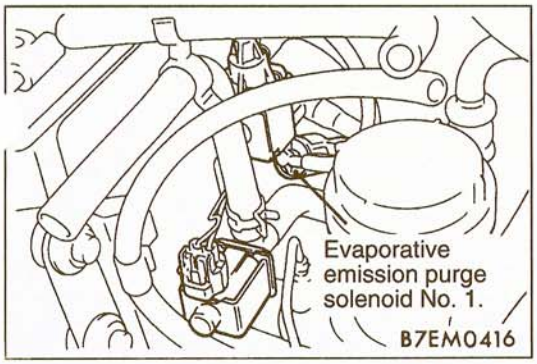


(7) Disconnect the connector from evaporative emission purge solenoid No. 1
(8) Apply negative pressure and check the negative pressure condition.

| Vacuum | Engine status | Normal condition |
|---|---|---|
| 53 kPa (15.7 in.Hg) | Idling | Negative pressure is maintained |
| | 3500 r/min. | Negative pressure leaks (after a few seconds have passed since the engine was started) |

(9) Connect the connector to evaporative emission purge solenoid No. 1.

## PURGE PORT VACUUM CHECK 17300150114

(1) Disconnect the vacuum hose (red stripe) from the intake air plenum vacuum nipple and connect a hand vacuum pump to the nipple.

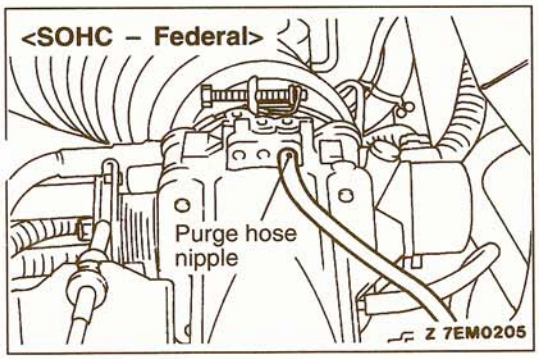


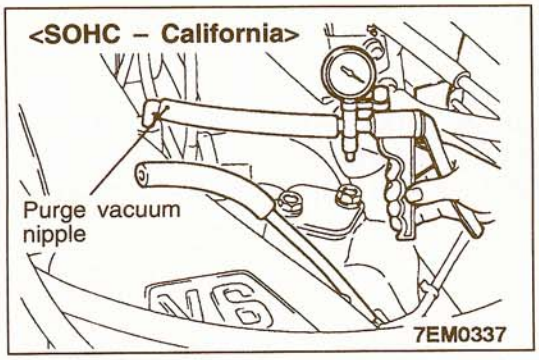


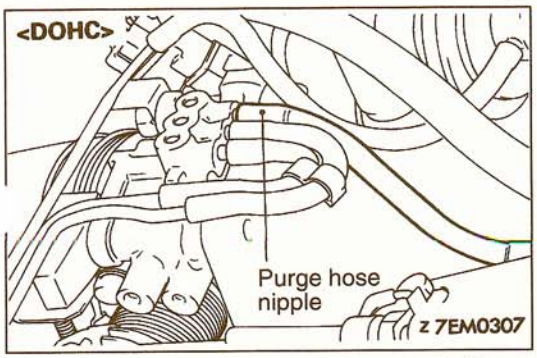

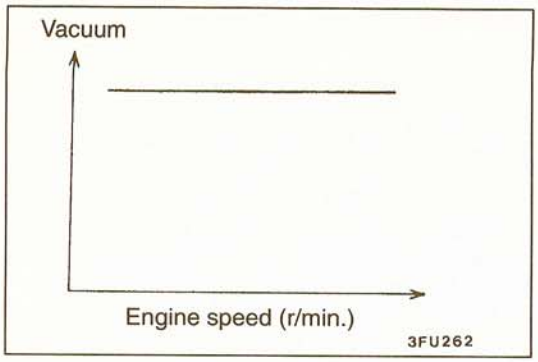


(2) Start the engine and check to see that, after raising the engine speed by racing the engine, purge vacuum is kept constant regardless of the increased engine speed.
NOTE
If there is no vacuum created, it is possible that the intake air plenum port may be clogged and require cleaning.

## EVAPORATIVE EMISSION PURGE SOLENOID (NO.1) CHECK

17300170103

NOTE
When disconnecting the vacuum hose, make an identification mark on it so that it can be reconnected to the original position.

(1) Disconnect the vacuum hose from the solenoid valve.
(2) Disconnect the harness connectors.
(3) Connect a hand vacuum pump to the nipple to which the red-striped vacuum hose was connected.
(4) Apply a vacuum and check for air-tightness when voltage applied directly to the evaporative emission purge solenoid (No.1) and when the voltage is discontinued.

| Battery positive voltage | Normal condition |
|---|---|
| When applied | Negative pressure leaks. |
| When discontinued | Negative pressure is maintained. |

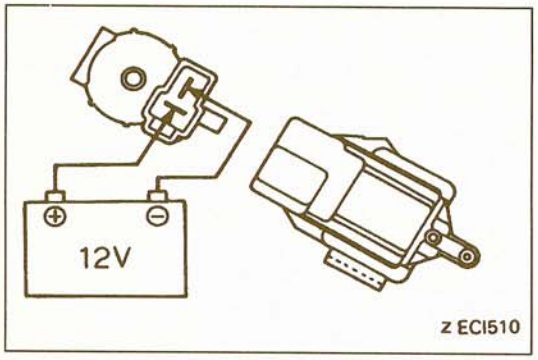


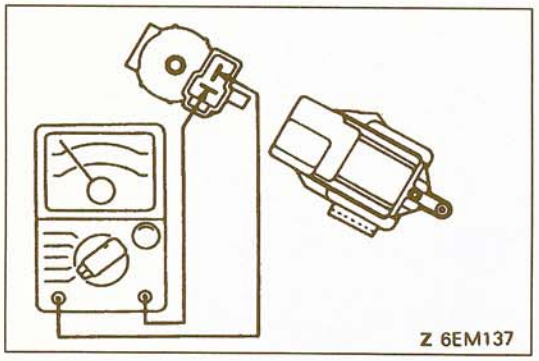


(5) Measure the resistance between the terminals of the solenoid valve.

**Standard value:**
**36 – 44 Ω [at 20°C (68°F)]**
**<DOHC, SOHC – Federal>**
**62 – 74 Ω [at 20°C (68°F)] <SOHC – California>**

## EVAPORATIVE EMISSION PURGE SOLENOID (NO.2) CHECK

17300550020

NOTE
When disconnecting the vacuum hose, make an identification mark on it so that it can be reconnected to the original position.

(1) Disconnect the vacuum hose from the solenoid valve.
(2) Disconnect the harness connectors.
(3) Connect a hand vacuum pump to the nipple to which the red-striped vacuum hose was connected.
(4) Apply a vacuum and check for air-tightness when voltage applied directly to the evaporative emission purge solenoid (No.2) and when the voltage is discontinued.

| Battery positive voltage | Normal condition |
|---|---|
| When applied | Negative pressure leaks. |
| When discontinued | Negative pressure is maintained. |

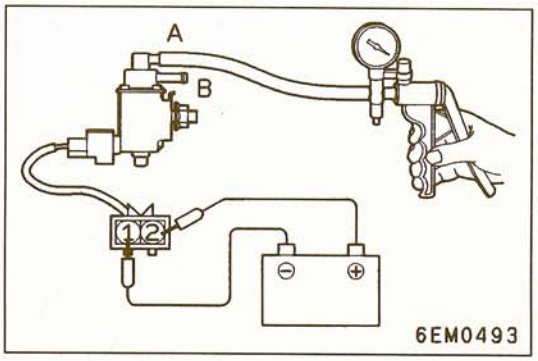


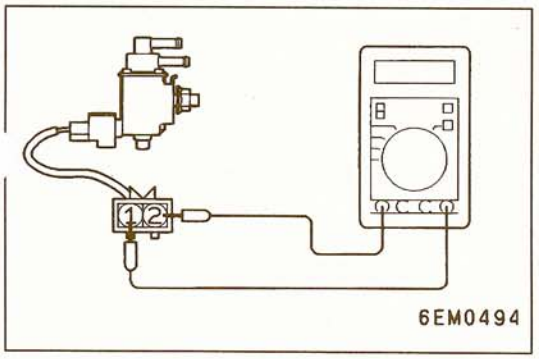


(5) Measure the resistance between the terminals of the solenoid valve.

**Standard value: 36 – 44 Ω [at 20 °C (68 °F)]**

## FUEL TANK PRESSURE RELIEF VALVE CHECK

17300210010

Connect a clean rubber hose to the fuel tank pressure relief valve and check the operation.

| Inspection procedure | Normal condition |
|---|---|
| Lightly blow from the inlet (fuel tank) side. | Air passes through after a slight resistance |
| Lightly blow from the outlet (evaporative emission canister) side | Air passes through. |

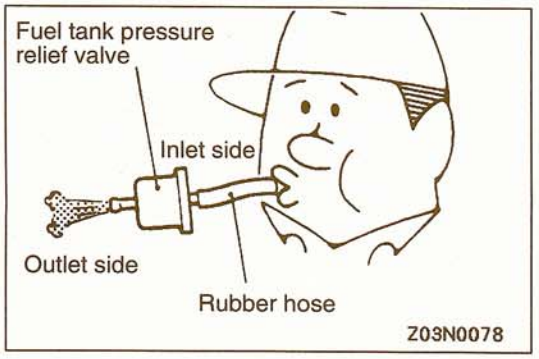

## VOLUME AIR FLOW SENSOR, ENGINE COOLANT TEMPERATURE SENSOR CHECK 17300180069

Refer to GROUP 13A–On-vehicle Inspection of MFI Compr nents.

## CANISTER 17300420031

### REMOVAL AND INSTALLATION

Refer to GROUP 13F – Fuel Line and Vapor Line

### INSPECTION 17300430034

Check for damage, cracks for fusion and replace if faulty.

# EXHAUST GAS RECIRCULATION (EGR) SYSTEM <DOHC, SOHC – Federal>

17300520113

## OMPONENT LOCATION

<SOHC>

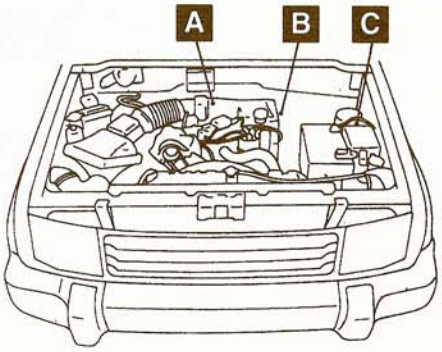


16E0128

<DOHC>

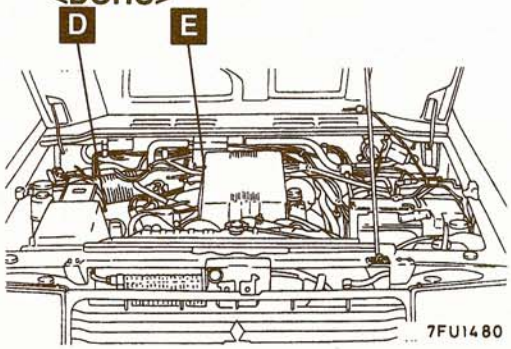


7FU1866

| Name | Symbol | Name | Symbol |
|---|---|---|---|
| EGR solenoid <SOHC> | C | EGR valve <SOHC-24 valve engine> | A |
| EGR solenoid <DOHC> | D | EGR valve <DOHC> | E |
| EGR valve <SOHC-12 valve engine> | B | – | – |

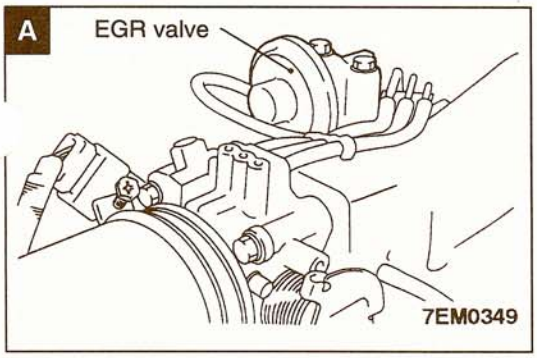


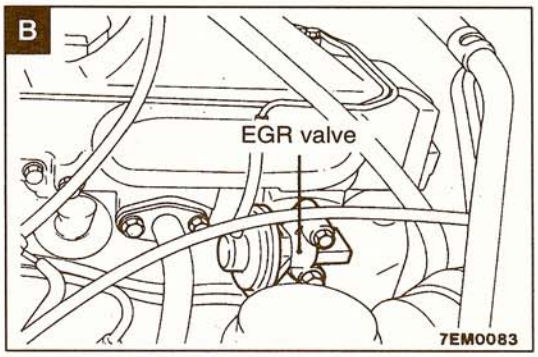


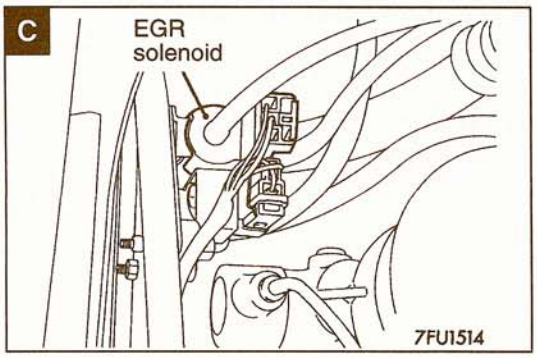


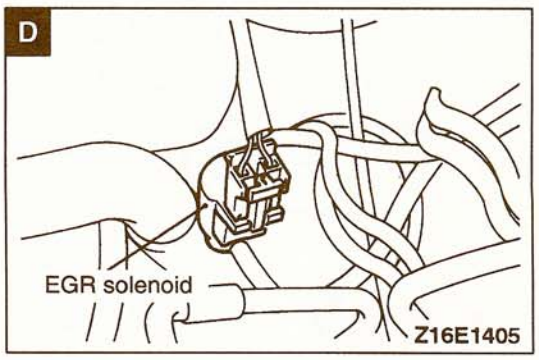


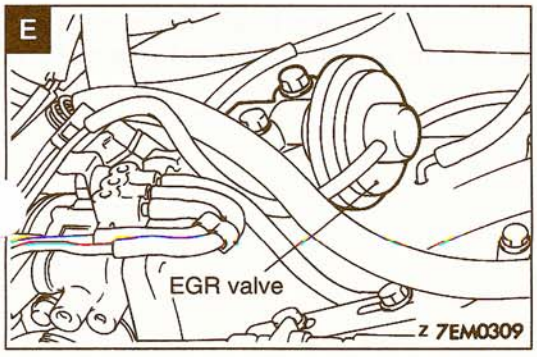


TSB Revision

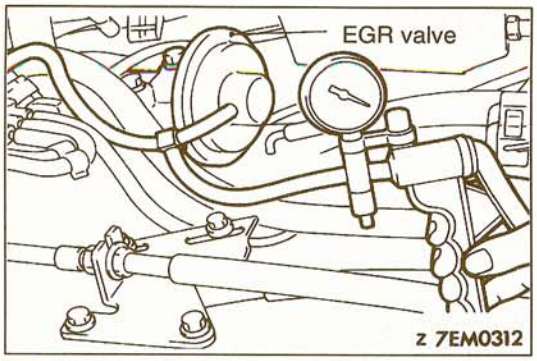


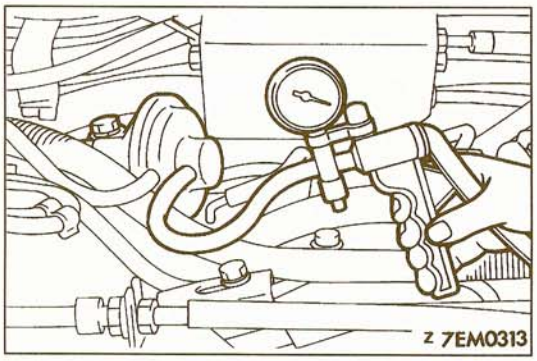


## EGR SYSTEM CHECK

17300260121

NOTE
The illustration shows the case for the DOHC engine.

(1) Disconnect the green striped vacuum hose from the EGR valve, and using a three-way terminal, connect a hand vacuum pump as shown.
(2) Regarding cold condition [coolant temperature: 20°C (68°F) or less] and warm condition [coolant temperature: 70°C (158°F) or more] of the engine, check the following two points.

**<Cold condition of engine>**

| Engine operation | Normal state |
|---|---|
| Race the engine by rapidly press in the accelerator pedal. | The negative pressure does not vary. (Atmospheric pressure) |

**<Warm condition of engine>**

| Engine operation | Normal state |
|---|---|
| Race the engine by rapidly press in the accelerator pedal. | The negative pressure rises to 13 kPa (3.9 in. Hg) or more. |

(3) Disconnect the three-way terminal, and connect the hand vacuum pump to the EGR valve.
(4) When a negative pressure of 31 kPa (9.1 in.Hg) is applie during idling, check that the engine stops or idles unstably.

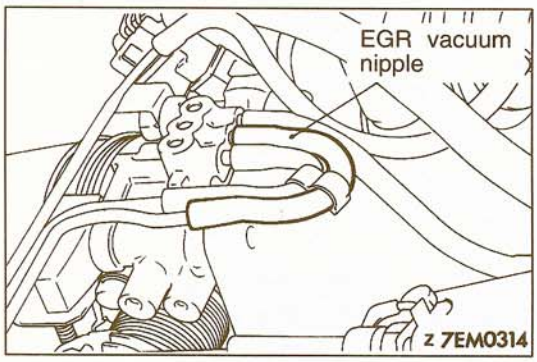


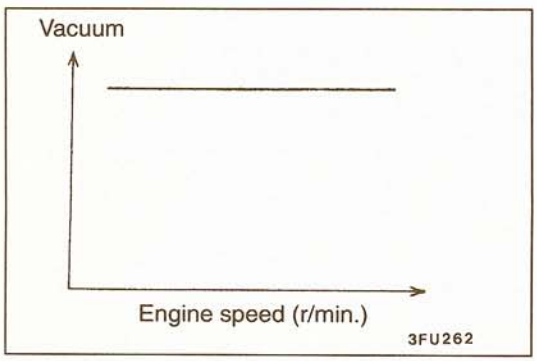


## EGR VALVE CONTROL VACUUM CHECK

17300300021

(1) Disconnect the vacuum hose (green stripe) from the throttle body EGR vacuum nipple and connect a hand vacuum pump to the nipple.

(2) Start the engine and check to see that, after raising the engine speed by racing the engine, vacuum remains fairly constant.

**TSB Revision**

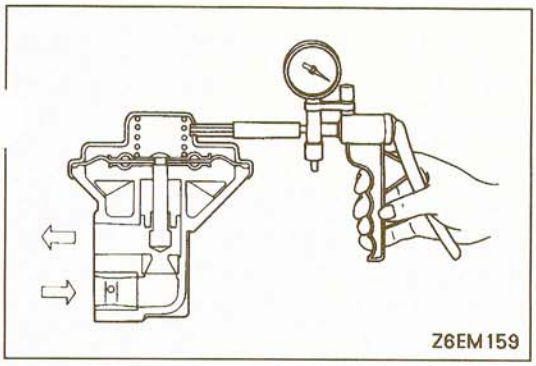


## EGR VALVE CHECK

17300280097

(1) Remove the EGR valve and check it for sticking, deposit of carbon, etc.
If such condition exists, clean with adequate solvent to ensure tight valve seat contact.
(2) Connect a hand vacuum pump to EGR valve.
(3) Apply a vacuum of 67 kPa (19.7 in.Hg.) and check airtightness.
(4) Blow in air from one passage of the EGR to check condition as follows.

| Applying vacuum | Applying vacuum |
|---|---|
| 4.0 kPa (1.2 in.Hg.) or less | Air does not blow through |
| 31 kPa (9.1 in.Hg.) or more | Air blows through |

(5) Install a new gasket and EGR valve, tighten bolts to specified torque.

**Specified tightening torque: 22 Nm (16 ft.lbs.)**

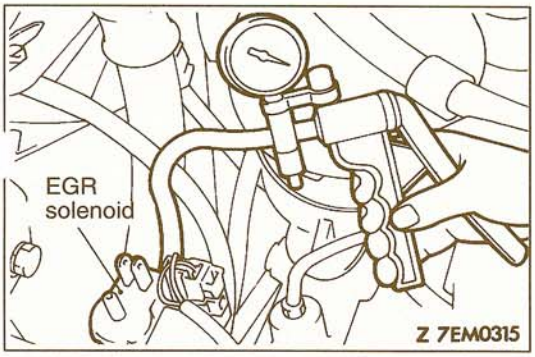


## EGR SOLENOID CHECK

17300310109

NOTE
When disconnecting the vacuum hose, make an identification mark on it so that it can be reconnected to the original position.

(1) Disconnect the vacuum hose from the solenoid valve.
(2) Disconnect the harness connector.
(3) Connect a hand vacuum pump to the nipple to which the white-striped vacuum hose was connected.

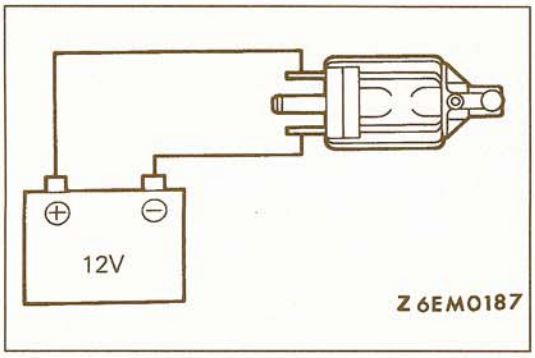


(4) Apply a vacuum and check for air-tightness when voltage applied directly to the EGR solenoid and when the voltage is discontinued.

| Battery voltage | Result |
|---|---|
| When applied | Vacuum is maintained |
| When discontinued | Vacuum leaks |

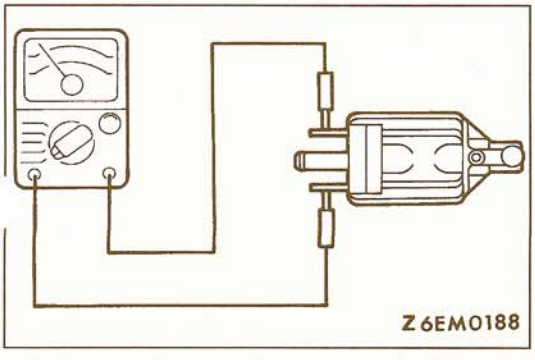


(5) Measure the resistance between the terminals of the solenoid valve.

**Standard value:**
**36 – 44 Ω [at 20°C (68°F)] <DOHC>**
**62 – 74 Ω [at 20°C (68°F)] <SOHC – Federal>**

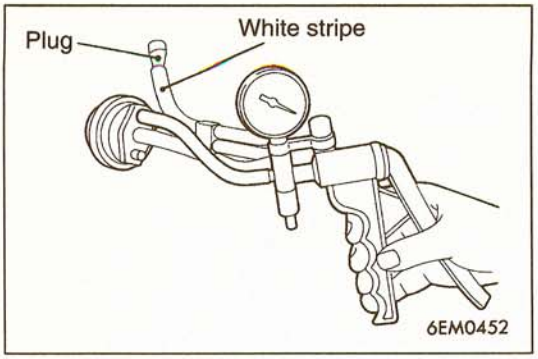


## VACUUM CONTROL VALVE CHECK 17300270056

1. Disconnect the black vacuum hose from the vacuum control valve and connect the hand vacuum pump to the vacuum control valve.
2. Put the blind plug to the removed vacuum hose.
3. Start the engine and run at idle.
4. Check the vacuum condition.

| Engine condition | Normal vacuum condition |
|---|---|
| Idling | Approx. 24 kPa (7.1 in.Hg) |

## MIXTURE CONTROL SYSTEM 17300340023

- To inspect the mixture control system, refer to GROUP 13A.
- For detailed information concerning the illumination pattern of the check engine/malfunction indicator lamp and other aspects of the on-board diagnostic, refer to GROUP 13A.

## CATALYTIC CONVERTER 17300390066

### REMOVAL AND INSTALLATION

3.0L – 12 VALVE engine, 3.0L – 24 VALVE engine for Federeal: Refer to GROUP 15 – Exhaust Pipe, Muffler and Catalytic Converter.
3.0L – 24 VALVE engine for California: Refer to GROUP 15 – Exhaust Pipe, Muffler and Catalytic Converter.

### INSPECTION 17300400035

Check for damage, cracks or fusion and replace if faulty.

**Caution**

1. **Stop the engine immediately if engine misfiring occurs, otherwise an abnormally hot exhaust system will damage the catalytic converter or ofher underbody parts.**
2. **Correct and repair the ignition or fuel system if there are malfunctions, otherwise engine misfiring may occur which will damage the catalytic converter.**
3. **Observe manufacturer's specifications when doing service work.**

# CLUTCH

## CONTENTS

21109000077

CLUTCH ..... 21A

CLUTCH OVERHAUL ..... 21B

## NOTES

# CLUTCH

## CONTENTS

21109000053


CLUTCH CONTROL ..... 6
CLUTCH MASTER CYLINDER ..... 8
CLUTCH PEDAL ..... 5
GENERAL SPECIFICATIONS ..... 2
LUBRICANTS ..... 2
ON-VEHICLE SERVICE ..... 3
Bleeding ..... 4
Clutch Pedal Check and Adjustment ..... 3
Interlock Switch Check and Adjustment ..... 4
SERVICE SPECIFICATIONS ..... 2

## GENERAL SPECIFICATIONS

21100020010

| Items | | Specifications |
|---|---|---|
| Clutch operating method | | Hydraulic type |
| Inside diameter of clutch master cylinder mm (in.) | | 15.87 (5/8) |
| Clutch disc facing size (outside×inside) mm (in.) | | 240×160 (9.4×6.3) |
| Clutch cover assembly | Type | Diaphragm spring strap drive type |
| | Setting load N (lbs.) | 5500 (1213) |
| | Mounting bolt circle diameter mm (in.) | 276 (10.9) |
| Clutch release cylinder bore diameter mm (in.) | | 19.05 (3/4) |

## SERVICE SPECIFICATIONS

21100030051

| Items | Standard value |
|---|---|
| Clutch pedal height (from melting sheet surface) mm (in.) | 185.5–190.5 (7.30–7.50) |
| Clutch pedal clevis pin play mm (in.) | 1–3 (.04–.12) |
| Clutch pedal play mm (in.) | 6–13 (.24–.51) |
| Distance between clutch pedal and the firewall when the clutch is disengaged mm (in.) | 35 (1.4) or more |
| Clutch pedal full stroke mm (in.) | 145 (5.72) |
| Clearance between stopper and interlock switch when the clutch pedal is fully depressed mm (in.) | 4.5–5.5 (.177–.217) |

## LUBRICANTS

21100040047

| Items | Specified lubricants | Quantity |
|---|---|---|
| Clutch fluid | DOT 3 or DOT 4 brake fluid | As required |
| Inner surface of clutch master cylinder and outer circumference of piston assembly | | |

TSB Revision

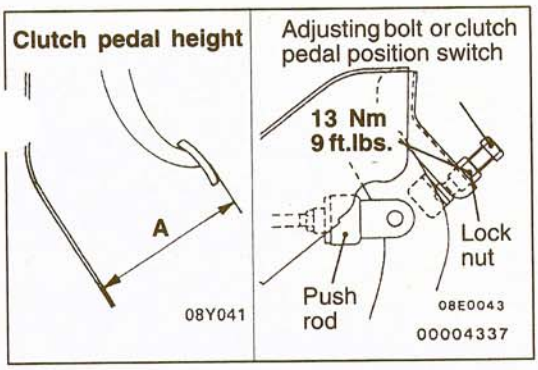


# ON-VEHICLE SERVICE

21100090066

## CLUTCH PEDAL CHECK AND ADJUSTMENT

1. Turn up the carpet, etc. under the clutch pedal.
2. Measure the clutch pedal height from the firewall.

**Clutch pedal height**

**Standard value (A):**
**185.5 – 190.5 mm (7.30 – 7.50 in.)**
**[from melting sheet surface]**

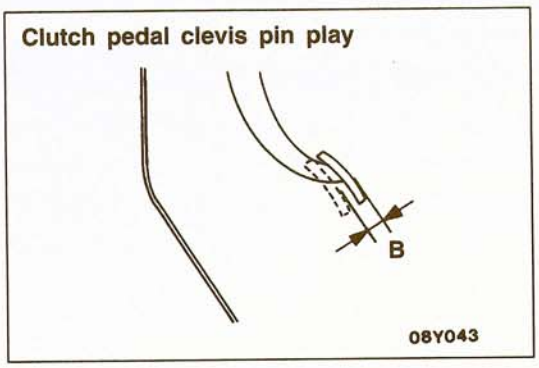


3. If the pedal height is not within the standard value, loosen the lock nut and adjust the pedal height to the standard value using the adjusting bolt (vehicles without auto-cruise control), or using the clutch pedal position switch (vehicles with auto-cruise control) or push rod.
4. Measure the clutch pedal play.

**Clutch pedal play (play at the clevis pin)**

**Standard value (B): 1 – 3 mm (.04 – .12 in.)**

5. If the clutch pedal play is outside the standard value, adjust with the push rod.

**Caution**
**Do not push in the master cylinder push rod at this time.**

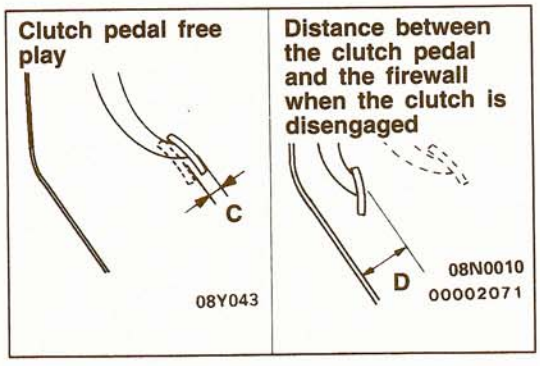


6. After completing the adjustments, confirm that the clutch pedal free play and the distance between the clutch pedal and the firewall when the clutch is disengaged are within the standard value ranges.

**Clutch pedal play (including the clevis pin play)**

**Standard value (C): 6 – 13 mm (.24 – .51 in.)**

**Distance between the clutch pedal and the firewall when the clutch is disengaged**

**Standard value (D): 35 mm (1.4 in.) or more**
**[from melting sheet surface]**

7. If the clutch pedal free play and the distance between the clutch pedal and the firewall when the clutch is disengaged do not agree with the standard values, bleed the air in the hydraulic system, or inspect the master cylinder, release cylinder or clutch.
8. Turn back the carpet, etc.

TSB Revision

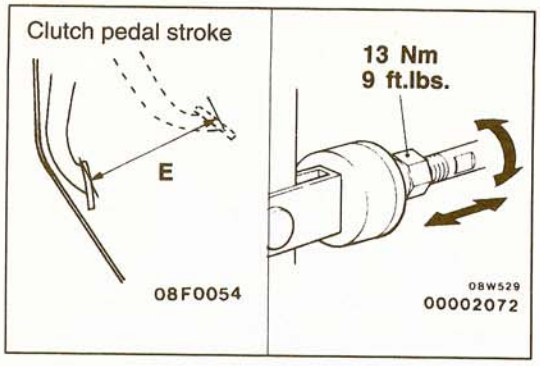


## INTERLOCK SWITCH CHECK AND ADJUSTMENT

21100110038

(1) Check and adjust the clutch pedal height. (Refer P.21A-3.)

(2) Measure the clutch pedal full stroke (E).

**Standard value (E): 145 mm (5.72 in.)**

If the clutch pedal full stroke is outside the standard value, adjust by turning the push rod.

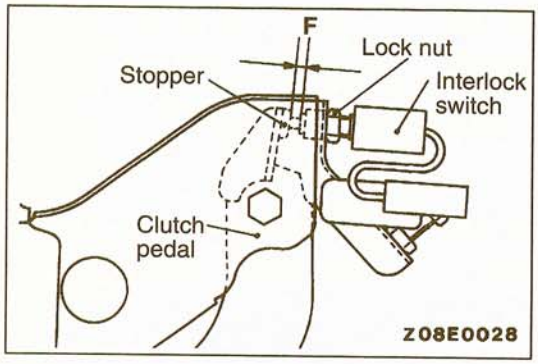


(3) Measure the clearance (F) in the illustration with the clutch pedal fully depressed condition (full stroke).

**Standard value (F): 4.5–5.5 mm (.177–.217 in.)**

If the clearance is outside the standard value, adjust by loosening the interlock switch lock nut and turning the interlock switch.

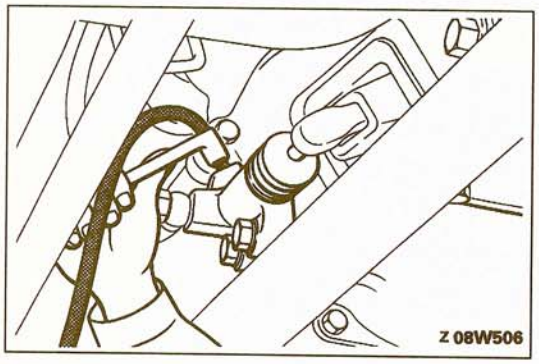


## BLEEDING

21100140051

Whenever the clutch pipe, the clutch hose, and/or the clutch master cylinder have been removed, or if air is suspected in the clutch lines, bleed the system.

**Specified fluid: DOT 3 or DOT 4 brake fluid**

**Caution**
**Use the specified fluid. Avoid using a mixture of the specified fluid and other fluid.**

# CLUTCH PEDAL

21100160071

## REMOVAL AND INSTALLATION

**Pre-removal Operation**
- Foot Shower Duct (L.H.) Removal (Refer to GROUP 55 – Ventilators.)

**Post-installation Operation**
- Foot Shower Duct (L.H.) Installation (Refer to GROUP 55 – Ventilators.)
- Clutch Pedal Adjustment (Refer to P.21A-3.)

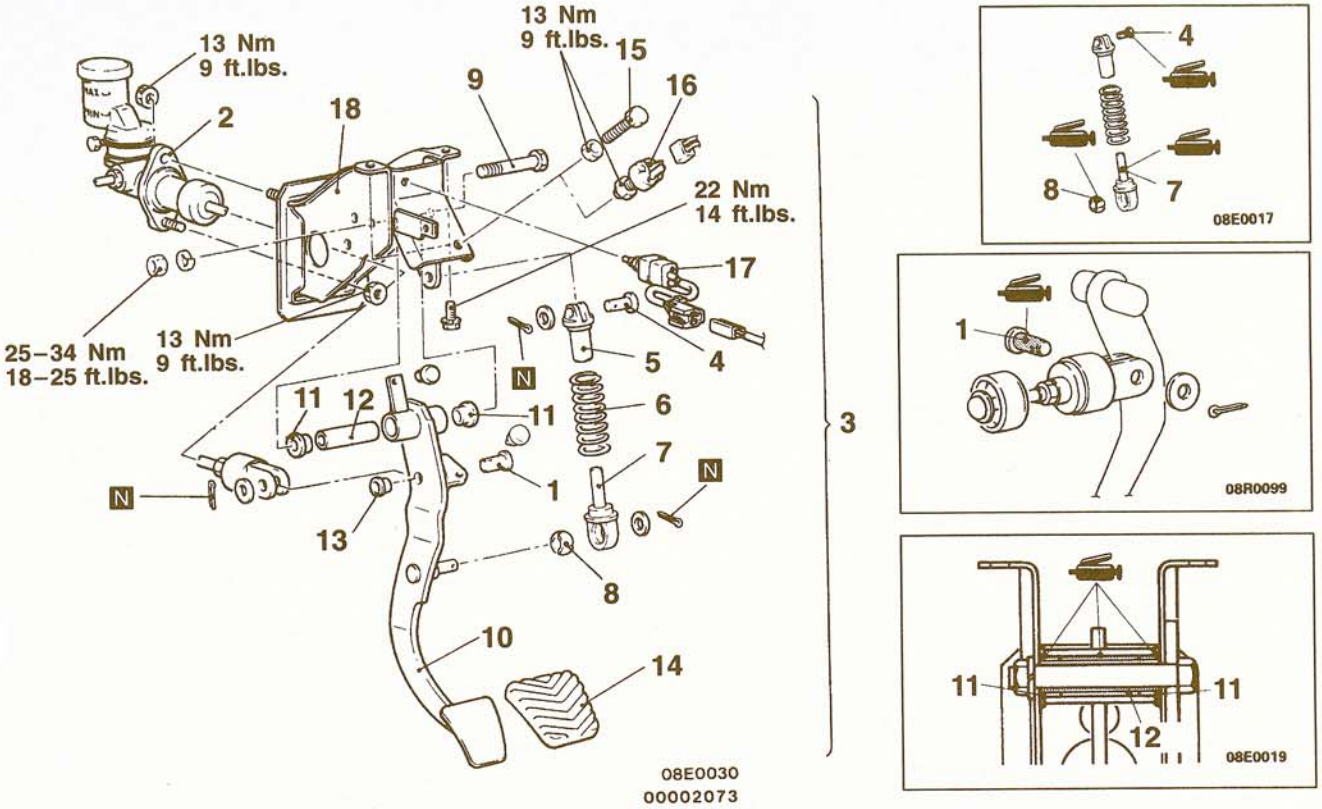


**Removal steps**

1. Clevis pin
2. Clutch master cylinder connection
3. Clutch pedal assembly
4. Clevis pin
5. Rod A
6. Turnover spring
7. Rod B
8. Bushing
9. Pedal shaft
10. Clutch pedal
11. Bushings
12. Spacer
13. Bushings
14. Pedal pad
15. Stopper bolt <Vehicles without auto-cruise control system>
16. Clutch pedal position switch <Vehicles with auto-cruise control system>
17. Interlock switch
18. Clutch pedal bracket

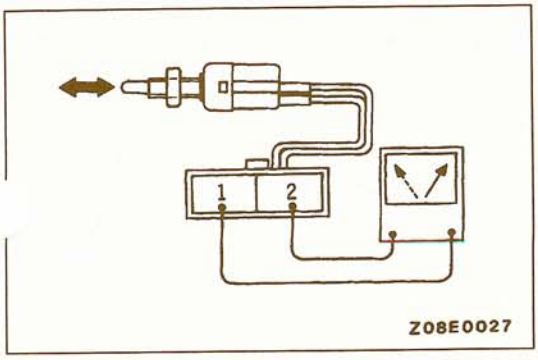


## INSPECTION

21100170050

- Check the pedal shaft and bushing for wear.
- Check the clutch pedal for bend or torsion.
- Check the turnover spring for damage or deterioration.
- Check the pedal pad for damage or wear.

### INTERLOCK SWITCH INSPECTION

(1) Connect an ohmmeter between terminals (1)–(2).
(2) If there is continuity when the switch is pressed and no continuity when it is released, then the switch is normal.

**TSB Revision**

# CLUTCH CONTROL

21100190070

## REMOVAL AND INSTALLATION

**Pre-removal Operation**
- Clutch Fluid Draining

**Post-installation Operation**
- Clutch Fluid Supplying
- Bleeding (Refer to P.21A-4.)

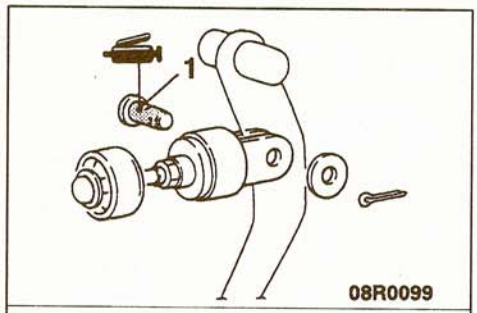


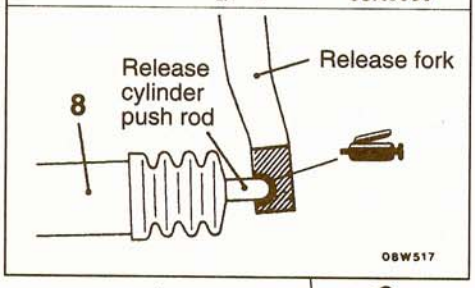


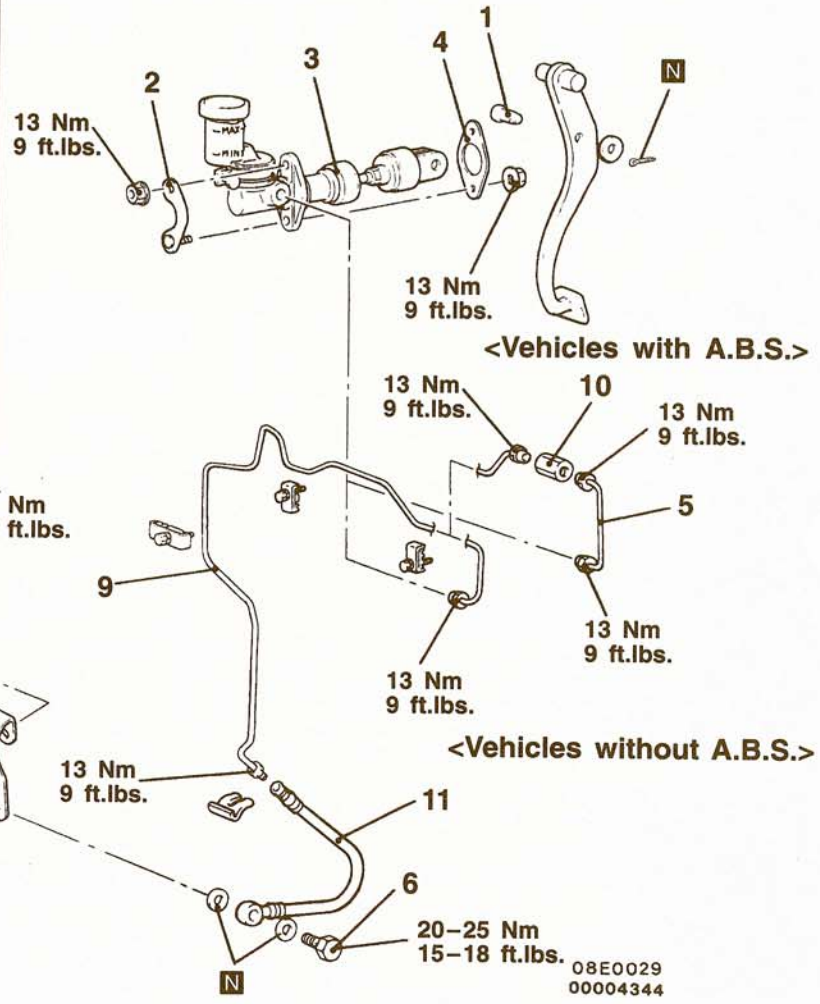


**Clutch master cylinder removal steps**
- Clutch Pedal adjustment (Refer to P.21A-3.)

1. Clevis pin
2. Plate

◀A▶ 3. Clutch master cylinder

4. Sealer
5. Clutch pipe A <Vehicles with A.B.S.>

**Clutch release cylinder removal steps**

6. Eye bolt
7. Heat protector
8. Clutch release cylinder

◀B▶ **Clutch pipe B, Connector removal steps**

9. Clutch pipe B
10. Connector <Vehicles with A.B.S.>

**Clutch hose removal steps**

6. Eye bolt

◀C▶ 11. Clutch hose

NOTE
A.B.S.: Anti-lock Braking System

**TSB Revision**

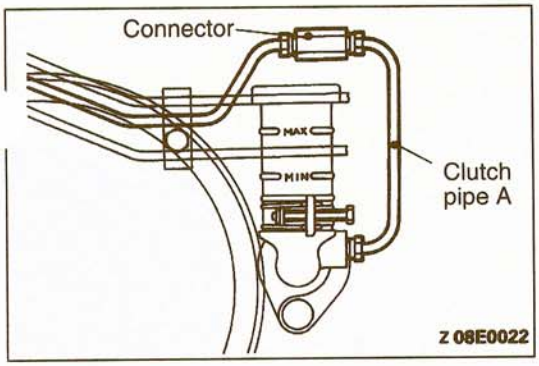


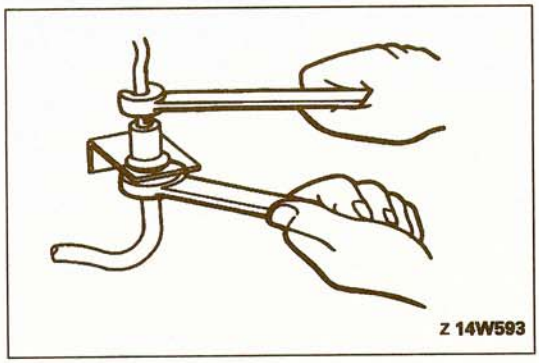


## REMOVAL SERVICE POINTS

### ◀A▶ CLUTCH MASTER CYLINDER REMOVAL

For vehicles with ABS, remove the connector and the clutch pipe A assembly, and remove the clutch master cylinder from the vehicle with the clutch pipe still attached.

### ◀B▶ CLUTCH PIPE B REMOVAL

(1) Remove the brake booster.
(Refer to GROUP 35A – Brake Booster.)
(2) Remove the link assembly. <Vehicles with Auto-cruise control system> (Refer to GROUP 17 – Auto-cruise control.)
(3) While holding the nut at the clutch hose side, loosen the flare nut of the clutch pipe.

### ◀C▶ CLUTCH HOSE REMOVAL

While holding the nut at the clutch hose side, loosen the flare nut of the clutch pipe.

## INSPECTION

21100200056

- Check the master cylinder or clutch hose for fluid leakage.
- Check the clutch hose or pipe for cracks or clogging.

# CLUTCH MASTER CYLINDER

21100210066

## DISASSEMBLY AND REASSEMBLY

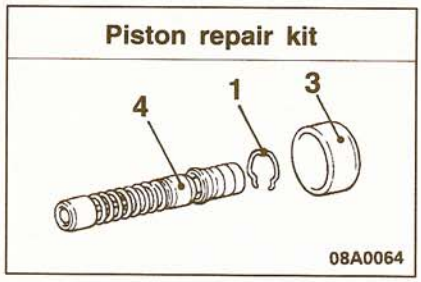


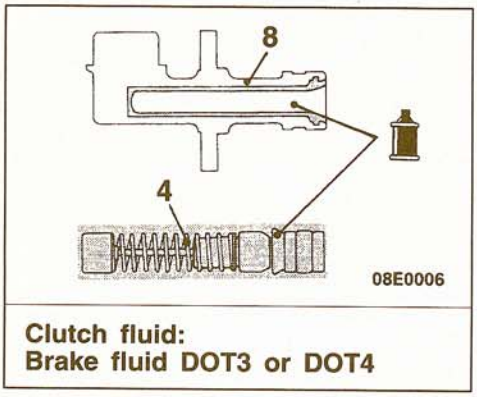


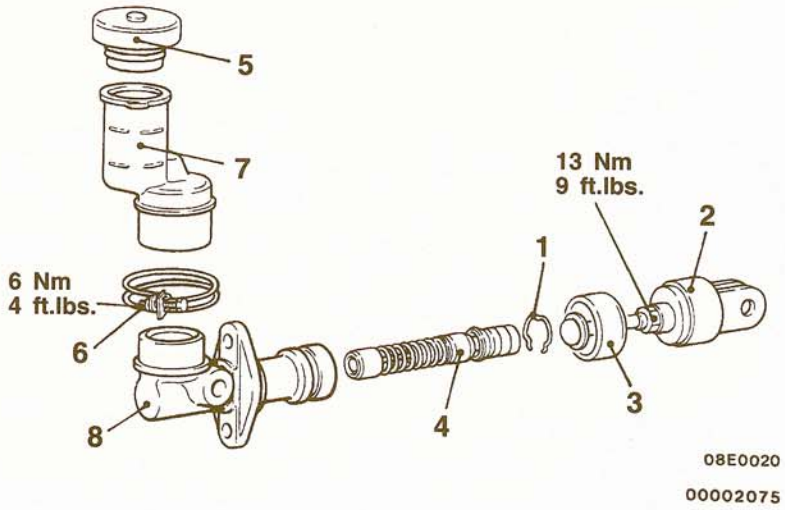


**Disassembly steps**

1. Piston stop ring
2. ▶A◀ Damper and push rod
3. Boot
4. ◀A▶ Piston assembly
5. Reservoir cap
6. Reservoir band
7. Reservoir
8. Master cylinder body

## DISASSEMBLY SERVICE POINT

### ◀A▶ PISTON ASSEMBLY REMOVAL

**Caution**

1. **Do not damage the master cylinder body and piston assembly.**
2. **Do not disassemble piston assembly.**

## REASSEMBLY SERVICE POINT

### ▶A◀ DAMPER AND PUSH ROD INSTALLATION

NOTE

Set the length of the push rod assembly to the shown dimension to make the adjustment of the clutch pedal easier.

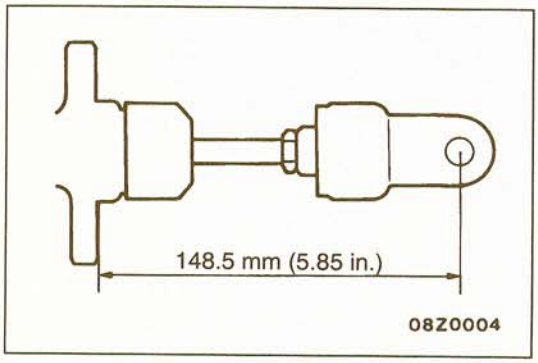


## INSPECTION

211002200

- Check the inside cylinder body for rust or scars.
- Check the piston cup for wear or deformation.
- Check the piston for rust or scars.
- Check the clutch tube connection part for clogging.

TSB Revision

# CLUTCH OVERHAUL

## CONTENTS

21209000063


**CLUTCH** ..... 3

**CLUTCH RELEASE CYLINDER** ..... 7

**SPECIFICATIONS** ..... 2

Lubricants ..... 2

Service Specifications ..... 2

Torque Specifications ..... 2

# SPECIFICATIONS

21200030054

## SERVICE SPECIFICATIONS

| Items | Limit |
|---|---|
| Facing rivet sink mm (in.) | 0.3 (.012) |
| Diaphragm spring end height difference mm (in.) | 0.5 (.020) |

## TORQUE SPECIFICATIONS

| Items | Nm | ft. lbs. |
|---|---|---|
| Clutch cover bolt | 19 | 14 |
| Release cylinder mounting bolt | 19 | 14 |
| Release cylinder bleeder plug | 11 | 8.0 |
| Release fork fulcrum | 36 | 24 |

## LUBRICANTS

21200040057

| Items | Specified lubricants | Quantity |
|---|---|---|
| Clutch release cylinder inner surface | SAE J1703 (DOT 3) | As required |
| Piston and cup of surface | | |
| Clutch release fork shaft | Mitsubishi genuine grease Part No.0101011 or equivalent | As required |
| Clutch release bearing to release fork contact surface | | |
| Clutch release bearing inside | MOLYKOTE BR-2 PLUS | As required |
| Clutch disc spline | | |
| Release fork fulcrum | | |

# CLUTCH

21200100069

## REMOVAL AND INSTALLATION

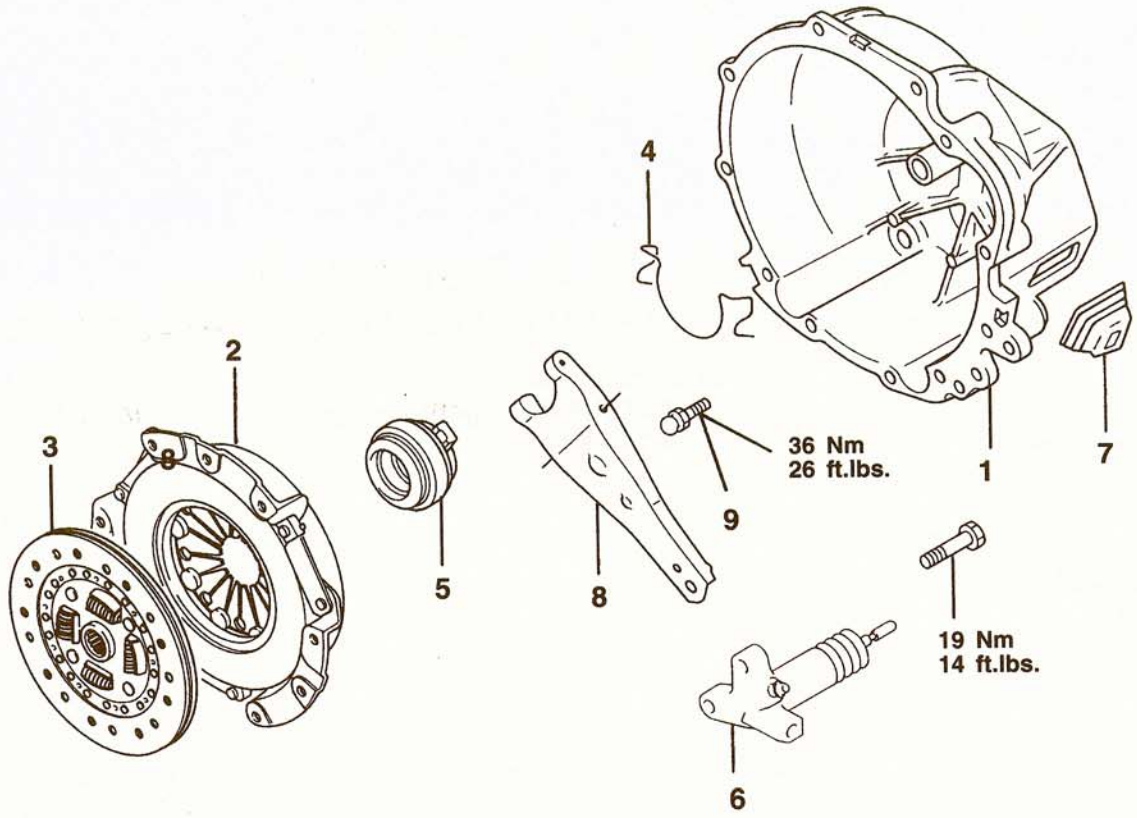


ATRM0659

**Removal steps**

1. Transmission
2. ▶C◀ Clutch cover
3. ▶C◀ Clutch disc
4. Return spring
5. ▶B◀ Clutch release bearing
6. Release cylinder
7. Boot
8. ◀A▶ ▶A◀ Release fork
9. Fulcrum

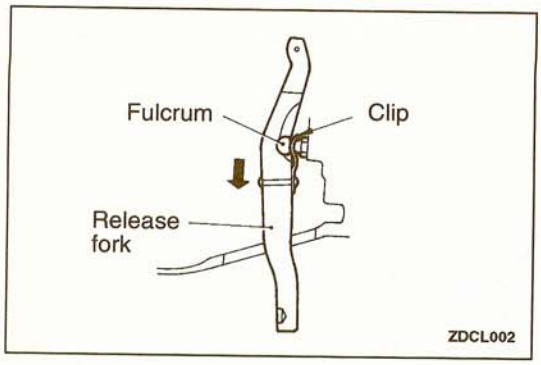


## REMOVAL SERVICE POINTS

### ◀A▶ RELEASE FORK REMOVAL

Slide release fork in direction of arrow and disengage fulcrur from clip to remove release fork. Be careful not to cause damage to clip by pushing release fork in the direction other than that of arrow and removing it with force.

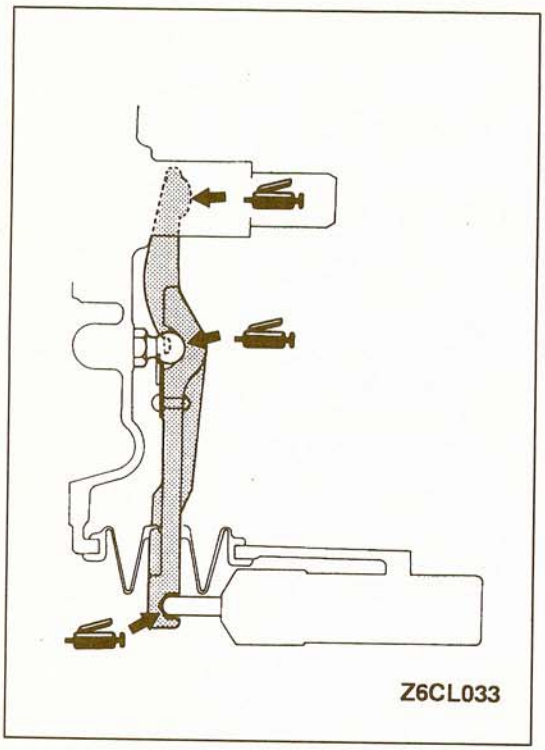


## INSTALLATION SERVICE POINTS

### ▶A◀ GREASE APPLICATION TO RELEASE FORK

**Specified grease:**
**MITSUBISHI genuine grease Part No. 0101011 or equivalent**

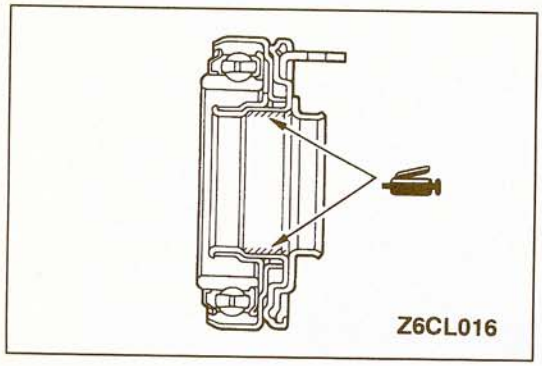


### ▶B◀ GREASE APPLICATION TO CLUTCH RELEASE BEARING

**Specified grease:**
**MITSUBISHI genuine grease Part No. 0101011 or equivalent**

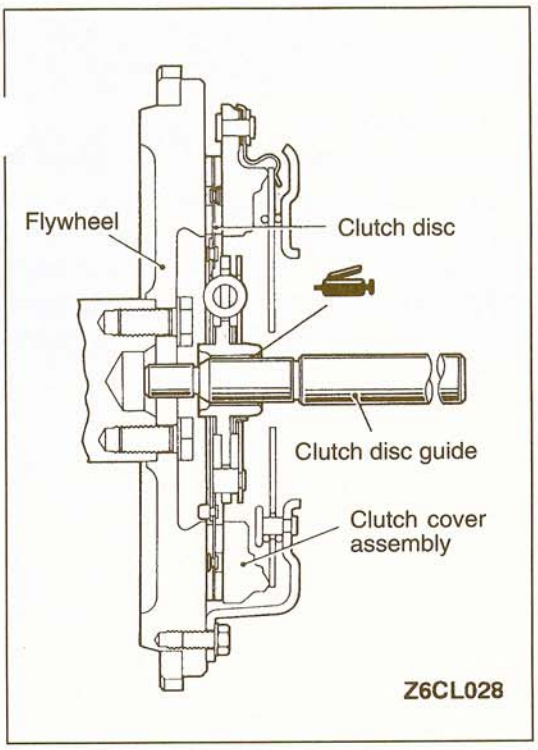


### ▶C◀ CLUTCH DISC/CLUTCH COVER ASSEMBLY INSTALLATION

(1) Apply specified grease to clutch disc splines and squeeze it in place with a brush.

**Specified grease:**
**MITSUBISHI genuine grease Part No. 0101011 or equivalent**

(2) Using clutch disc guide to position clutch disc on flywheel.

## INSPECTION

21200110055

### CLUTCH COVER ASSEMBLY

- Check the diaphragm spring end for wear and uneven height.
  Replace if wear is evident or height difference exceeds the limit.

  **Limit: 0.5 mm (.020 in.)**
- Check the pressure plate surface for wear, cracks and seizure.
- Check the strap plate rivets for looseness and replace the clutch cover assembly if loose.

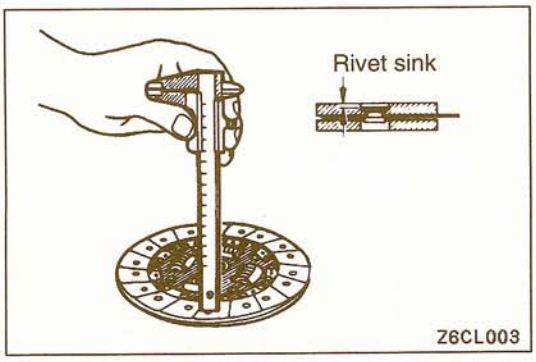


### CLUTCH DISC

- Check the facing for loose rivets, uneven contact, deterioration due to seizure, adhesion of oil or grease, and replace the clutch disc if defective.
- Measure the rivet sink and replace the clutch disc if it is out of specification.

  **Limit: 0.3 mm (.012 in.)**

- Check for torsion spring play and damage and if defective, replace the clutch disc.
- Combine the clutch disc with the input shaft and check sliding condition and play in the rotating direction. If it does not slide smoothly or the play is excessive, check after cleaning and reassembling. If the play is excessive, replace the clutch disc and/or the input shaft.

### CLUTCH RELEASE BEARING

**Caution**
**Release bearing is packed with grease. Therefore do nc wash it in cleaning solvent or the like.**

- Check bearing for seizure, damage, noise, or improper rotation. Check also diaphragm spring contact surface for wear.
- Replace bearing if its release fork contact surface is abnormally worn.

### RELEASE FORK

- Replace release fork if its bearing contact surface is abnormally worn.

# CLUTCH RELEASE CYLINDER

21200150064

## DISASSEMBLY AND REASSEMBLY

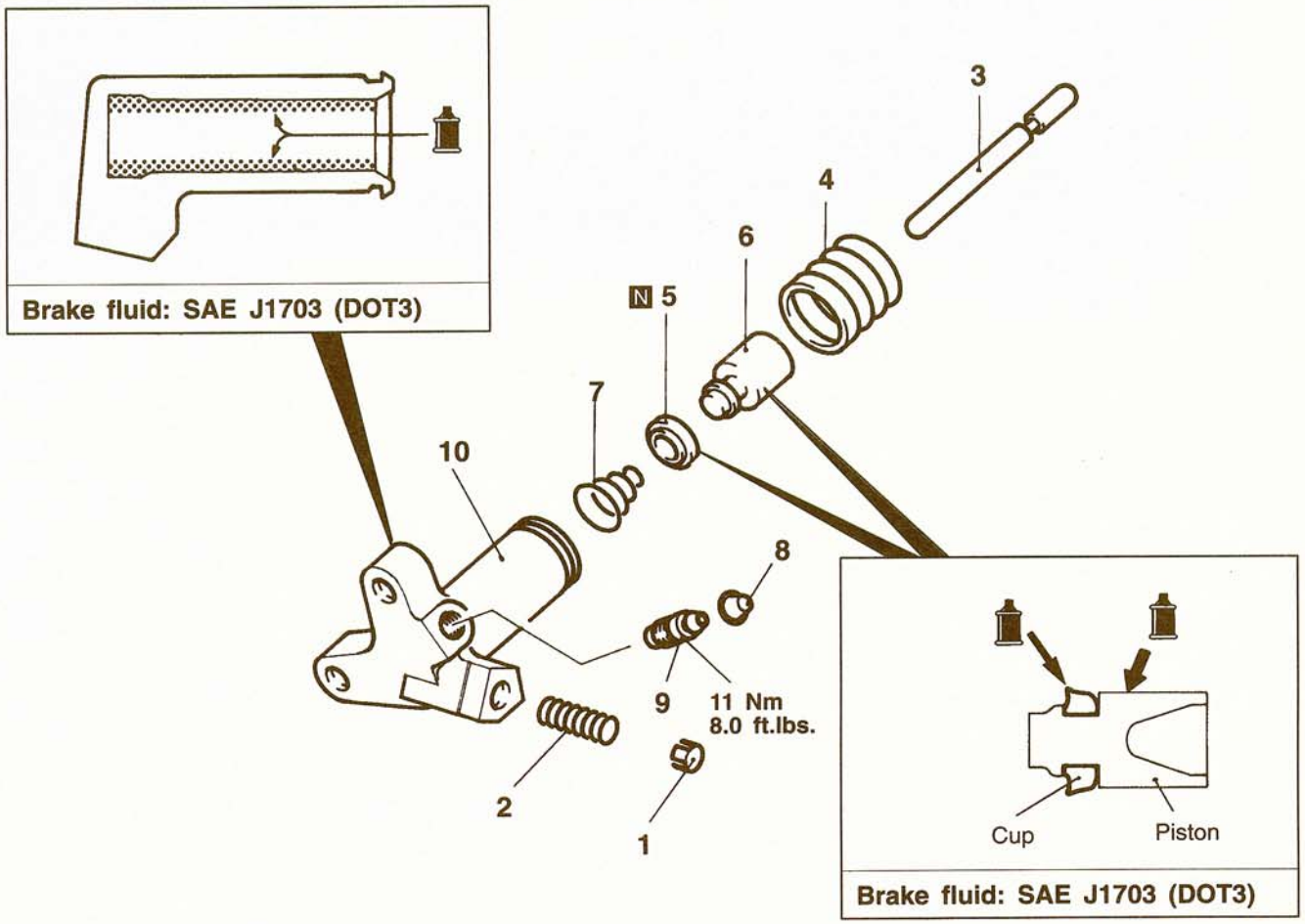


ATRM0662

**Disassembly steps**

1. Valve plate
2. Spring
3. Push rod
4. Boot
5. Piston cup

◀A▶

◀A▶

6. Piston
7. Conical spring
8. Cap
9. Bleeder plug
10. Release cylinder

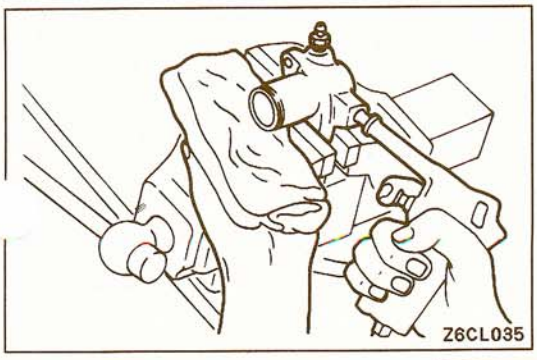


## DISASSEMBLY SERVICE POINT

### ◀A▶ PISTON AND PISTON CUP REMOVAL

Remove the piston from the release cylinder using compressed air.

**Caution**

1. **Cover with shop towel to prevent the piston from popping out.**
2. **Apply compressed air slowly to prevent brake fluid from splashing.**

**TSB Revision**

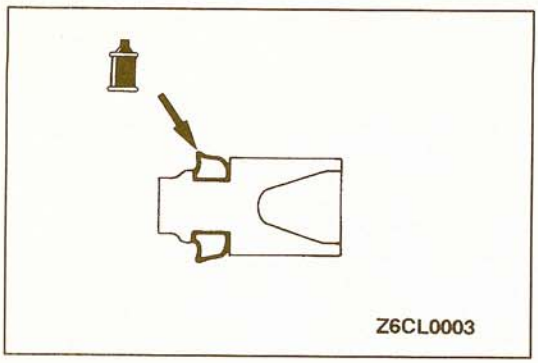


## INSPECTION

21200160050

(1) Check the inner surface of the release cylinder for scratches or irregular wear.
(2) Replace if the piston cup outer circumference is scratche or shows signs of fatigue, or if there is excessive wear of the lip where indicated in the figure.

# MANUAL TRANSMISSION

## CONTENTS

22109000081

MANUAL TRANSMISSION ..... 22A

MANUAL TRANSMISSION OVERHAUL <V5MT1> ..... 22B

NOTES

# MANUAL TRANSMISSION

## CONTENTS

22109000104


**CONTROL LEVER ASSEMBLY** ..... 8

**GENERAL SPECIFICATIONS** ..... 2

**LUBRICANTS** ..... 2

**ON-VEHICLE SERVICE** ..... 5

- Center Differential Lock Detection Switch Check ..... 6
- Center Differential Lock Operation Detection Switch Check ..... 6
- 4WD Indicator Control Unit Check ..... 7
- 4WD Operation Detection Switch Check ..... 6
- HIGH/LOW Detection Switch Check ..... 6
- Manual Transmission Oil Check ..... 5
- Manual Transmission Oil Replacement ..... 5
- Transfer Oil Check ..... 5
- Transfer Oil Replacement ..... 5
- Transfer Oil Seal Replacement ..... 5
- 2WD/4WD Detection Switch Check ..... 6

**SEALANTS AND ADHESIVES** ..... 2

**SPECIAL TOOLS** ..... 3

**TRANSMISSION AND TRANSFER ASSEMBLY** ..... 10

**TROUBLESHOOTING** ..... 4

# GENERAL SPECIFICATIONS

22100020017

| Items | | Specifications |
|---|---|---|
| Models | | V5MT1 |
| Transmission type | | 5-speed |
| Gear ratio | 1st | 3.918 |
| | 2nd | 2.261 |
| | 3rd | 1.395 |
| | 4th | 1.000 |
| | 5th | 0.829 |
| | Reverse | 3.925 |
| Final gear ratio | | 4.625 |
| Speedometer gear ratio | | 25/8 |
| Transfer type | | Active Traction 4WD |
| Gear ratio | High | 1.000 |
| | Low | 1.925 |
| Drive system | Front wheel | Chain drive |
| | Rear wheel | Direct drive |

# LUBRICANTS

22100040068

| Items | Specified lubricants | Quantity |
|---|---|---|
| Transmission | Hypoid gear oil SAE 75W–90 or 75W–85W conforming to API classification GL-4 | 2.5 $dm^3$ (2.6 qts.) |
| Transfer | Hypoid gear oil SAE 75W–90 or 75W–85W conforming to API classification GL-4 | 2.3 $dm^3$ (2.4 qts.) |
| Transfer oil seal lip | Hypoid gear oil SAE 75W–90 or 75W–85W conforming to API classification GL-4 | As required |

# SEALANTS AND ADHESIVES

22100050023

| Items | | Specified sealants and adhesives |
|---|---|---|
| Outer circumference of speedometer cable grommet | | 3M ATD Part No. 8001, 8011 or equivalent |
| Control lever assembly | Control lever gasket | 3M ATD Part No. 8663 or equivalent |
| | Control lever assembly mounting bolt | 3M Stud Locking Part No. 4170 or equivalent |
| Transmission and transfer assembly | Control housing gasket | 3M ATD Part No. 8663 or equivalent |
| | Control housing mounting bolt | 3M Stud Locking Part No. 4170 or equivalent |

TSB Revision

# SPECIAL TOOLS

22100060071

| Tool | Tool number and name | Supersession | Application |
|---|---|---|---|
| 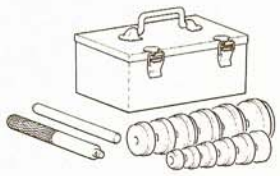 | MB990925<br>Bearing and oil seal installer set | MB990925-01 | Installation of oil seal (MB990928, MB990938) |

MB990925

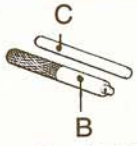


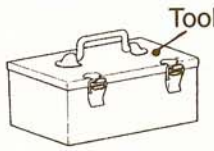





A09E0126

| | Contents of new tool (MB990925) | Current tools | O.D. mm (in.) | | Contents of new tool (MB990925) | Current tools | O.D. mm (in.) |
|---|---|---|---|---|---|---|---|
| A | MB990926 | MB990272<br>MB990658<br>MB990659 | 39 (1.54) | A | MB990933 | MB990307<br>MB990724 | 63.5 (2.50) |
| | MB990927 | MB990264<br>MB990680 | 45 (1.77) | | MB990934 | MB990766<br>MB990807 | 67.5 (2.66) |
| | MB990928 | MB990271<br>MB990808 | 49.5 (1.95) | | MB990935 | MB990133<br>MB990308<br>MB990762 | 71.5 (2.81) |
| | MB990929 | MB990306 | 51.0 (2.01) | | MB990936 | MB990718 | 75.5 (2.97) |
| | MB990930 | MB990283 | 54.0 (2.13) | | MB990937 | MB990309 | 79.0 (3.11) |
| | MB990931 | MB990681<br>MB990764 | 57.0 (2.24) | B | MB990938 | MB990124 | – |
| | MB990932 | MB990263 | 61.0 (2.40) | C | MB990939 | – | – |

# TROUBLESHOOTING

22100070043

| Trouble | Cause | Service Operation |
|---|---|---|
| Noise, Vibration | The transmission and engine mount is loose or damaged. | Tighten or replace the mount. |
| | The end play of each shaft is not proper. | Correct the end play. |
| | Gears are worn or damaged. | Replace the gears. |
| | The oil grade is improper. | Replace with the specified oil. |
| | The oil level is low. | Add oil. |
| | The engine's idling speed is not proper. | Adjust the idling speed. |
| Oil is leaking | Damaged oil seal or O-ring | Replace the oil seal or O-ring. |
| Shifting gears is hard or troublesome | Poor meshing or wear of synchronizer ring and gear cones | Repair or replace. |
| | Fatigued synchronizer spring | Replace the synchronizer ring. |
| | Incorrect oil grade | Replace with the specified oil. |
| Gears slip out | Worn gear shift forks or broken poppet spring | Replace the shift forks or poppet spring. |
| | Excessive clearance between synchronizer hub and sleeve | Replace the synchronizer hub and spring. |

# ON-VEHICLE SERVICE 22100090087

## MANUAL TRANSMISSION OIL CHECK

Refer to GROUP 00 – Maintenance Service

## MANUAL TRANSMISSION OIL REPLACEMENT 22100100070

Refer to GROUP 00 – Maintenance Service

## TRANSFER OIL CHECK 22100110042

Refer to GROUP 00 – Maintenance Service

## TRANSFER OIL REPLACEMENT 22100120045

Refer to GROUP 00 – Maintenance Service

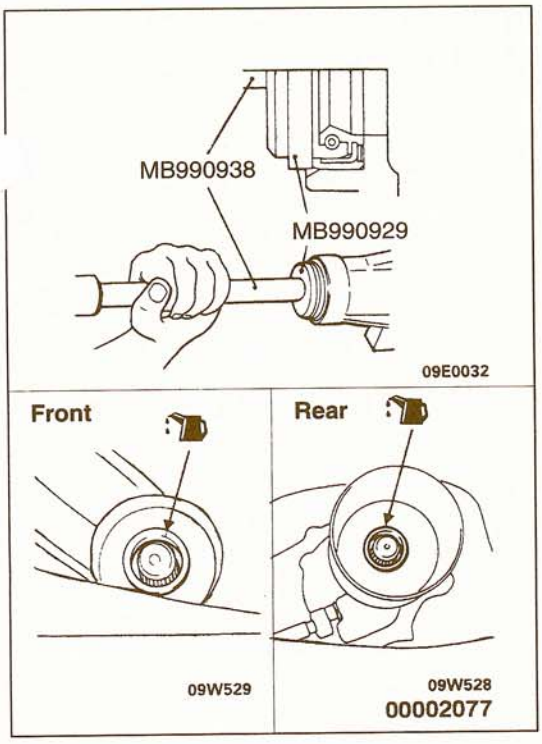


## TRANSFER OIL SEAL REPLACEMENT 22100130017

1. Disconnect the propeller shaft from the transfer. (Refer to GROUP 25–Propeller Shaft.)
2. Using a flat-tip (–) screwdriver, remove the oil seal.
3. Using the special tool, tap the transfer oil seal into the transfer.
   Note in illustration the direction of installation of transfer oil seal.
4. Apply a coating of the transmission oil to the lip of the oil seal.

   **Transmission oil:**
   **Hypoid gear oil SAE 75W–90 or 75W–85W conforming to API classification GL-4**

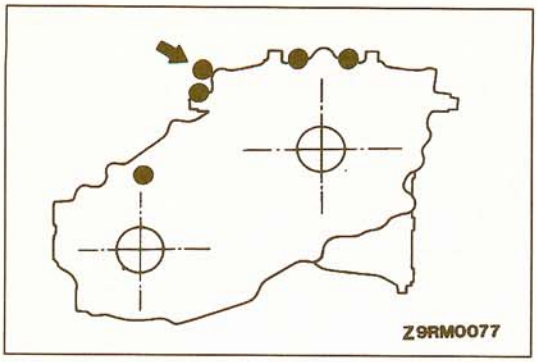


## CENTER DIFFERENTIAL LOCK DETECTION SWITCH CHECK 22100160016

Check the continuity between the brown connector termin on the side of the transfer case and the transfer case.

| Transfer control lever position | Continuity |
|---|---|
| 4H | No continuity |
| 4HLc | Continuity |

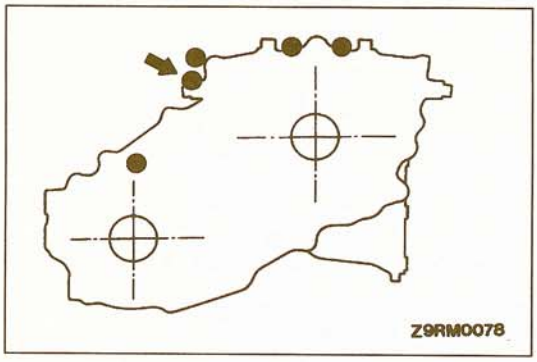


## 2WD/4WD DETECTION SWITCH CHECK 22100170019

Check the continuity between the black connector terminal on the side of the transfer case and the transfer case.

| Transfer control lever position | Continuity |
|---|---|
| 2H | Continuity |
| 4H | No continuity |

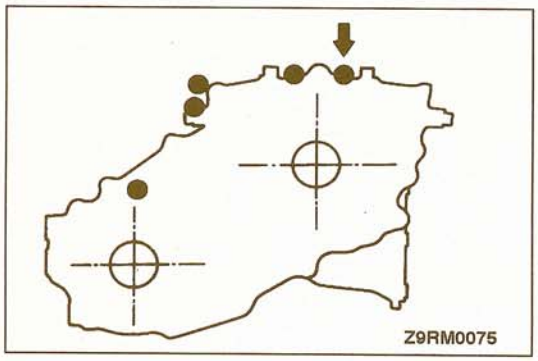


## CENTER DIFFERENTIAL LOCK OPERATION DETECTION SWITCH CHECK 22100190015

Check the continuity between the brown connector terminal on the top of the transfer case and the transfer case.

| Transfer control lever position | Continuity |
|---|---|
| 4H | No continuity |
| 4HLc | Continuity |

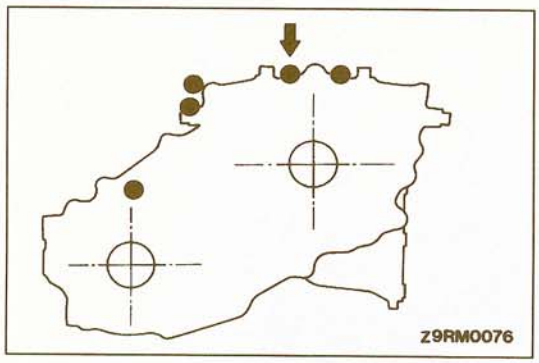


## 4WD OPERATION DETECTION SWITCH CHECK 22100200015

Check the continuity between the black connector terminal on the top of the transfer case and the transfer case.

| Transfer control lever position | Continuity |
|---|---|
| 2H | No continuity |
| 4H | Continuity |

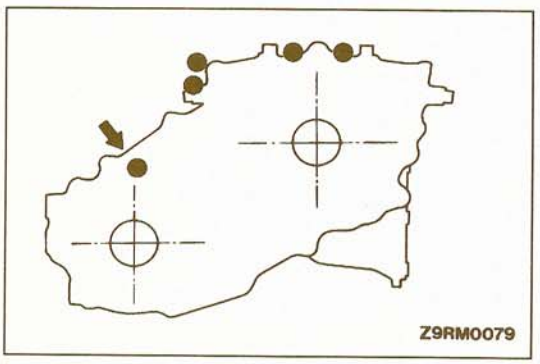


## HIGH/LOW DETECTION SWITCH CHECK 22100210018

Check the continuity between the white connector terminal on the side of the transfer case and the transfer case.

| Transfer control lever position | Continuity |
|---|---|
| 4HLc | Continuity |
| N (between 4HLc and 4LLc) | No continuity |
| 4LLc | Continuity |

TSB Revision

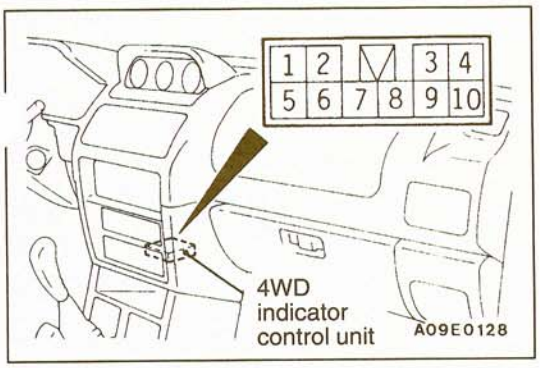


## 4WD INDICATOR CONTROL UNIT CHECK

22100220011

1. Remove the radio or CD player. (Refer to GROUP 54–Radio and Tape Player link=54400110035.)
2. Remove the 4WD indicator control unit
3. Measure the voltage at the terminals under each condition.
4. Carry out the voltage measurements with the harness disconnected from the control unit. Insert the probe from the rear of the connector and take the measurement between terminal (8) (earth terminal) and the respective terminals.

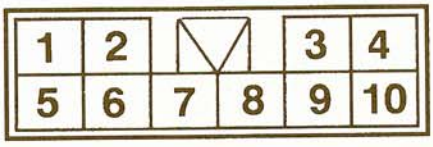


00004282

(Control unit side)

| Terminal No. | Inspection item | | Inspection condition | | | Terminal voltage |
|---|---|---|---|---|---|---|
| 3 | Ignition switch (IG2) | | Ignition switch (IG2) | | OFF | 0 V |
| | | | | | ON | Battery positive voltage |
| 4 | Combination meter (4WD indicator light) | Center differential lock indicator light | Ignition switch: ON | Transfer lever position | 4H | Battery positive voltage |
| | | | | | 4HLc | Less than 1.5 V |
| 10 | | Front wheel light | Ignition switch: ON | | In 2WD | 0 V |
| | | | | | In 4WD | Battery positive voltage* |
| 9 | | Rear wheel light | Ignition switch: ON | Transfer lever position | N | 0 V |
| | | | | | 4HLc, 4LLc | Battery positive voltage* |
| 6 | Free-wheel engage switch | | Ignition switch: ON | | In 2WD | Battery positive voltage* |
| | | | | | In 4WD | 0 V |
| 1 | HIGH/LOW detection switch | | Ignition switch: ON | Transfer lever position | N | Battery positive voltage* |
| | | | | | 4HLc, 4LLc | 0 V |
| 2 | 4WD operation detection switch | | Ignition switch: ON | Transfer lever position | 2H | Battery positive voltage* |
| | | | | | 4H | 0 V |
| 5 | Center differential lock detection switch | | Ignition switch: ON | Transfer lever position | 4H | Battery positive voltage* |
| | | | | | 4HLc | 0 V |
| 7 | Center differential lock operation detection switch | | Ignition switch: ON | Transfer lever position | 4H | Battery positive voltage* |
| | | | | | 4HLc | 0 V |

NOTE
Battery positive voltage marked with (*) is 1–2V lower than actual battery positive voltage.

**TSB Revision**

# CONTROL LEVER ASSEMBLY

22100590013

## REMOVAL AND INSTALLATION

**Pre-removal Operation**
- Front Console Assembly Removal (Refer to GROUP 52A – Floor Console.)
- Move the Transmission and Transfer Control Levers to the Following Positions.
  Transmission Control Lever: Neutral Position
  Transfer Control Lever: 4H (4 wheel drive-high range) Position

**Post-installation Operation**
- Front Console Assembly Installation (Refer to GROUP 52A – Floor Console.)
- Check the Operation of the Transmission and Transfer Control Levers and the Movement in each Lever Position.

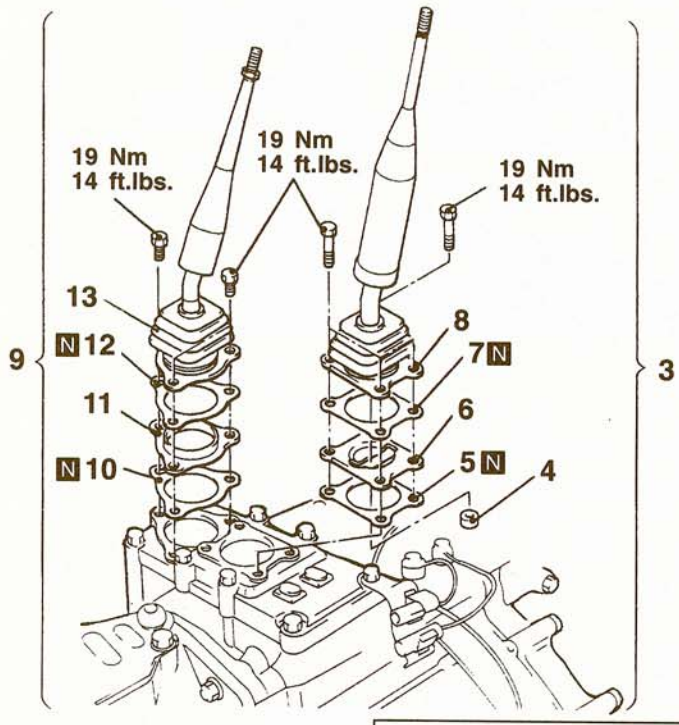


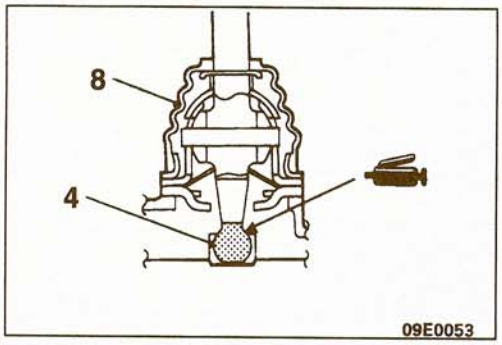


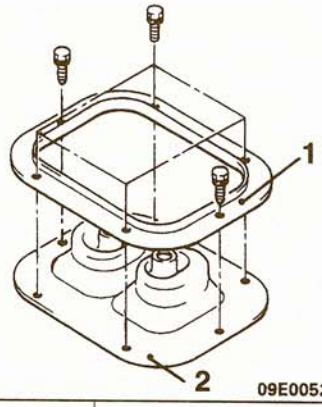


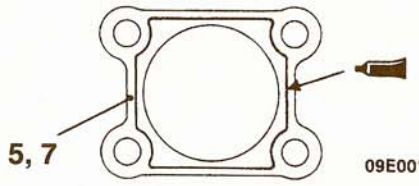


Apply the sealant to both sides of the gasket (No. 5 and 7).

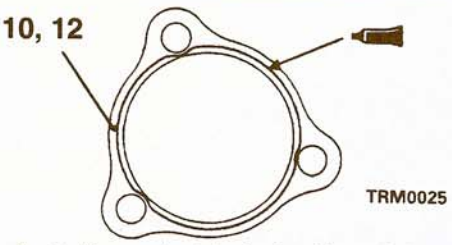


Apply the sealant to both sides of the gasket (No. 10 and 12).

**Sealant: 3M ATD Part No. 8663 or equivalent**

00002079

**Transmission control lever assembly removal steps**

1. Retainer
2. Control lever boot
- ▶A◀ 3. Transmission control lever assembly
4. Control lever bushing
5. Gasket
- ▶B◀ 6. Stopper plate
7. Gasket
8. Transmission control lever

**Transfer control lever assembly removal steps**

1. Retainer
2. Control lever boot
- ▶A◀ 9. Transfer control lever assembly
10. Gasket
11. Stopper plate
12. Gasket
13. Transfer control lever

**TSB Revision**

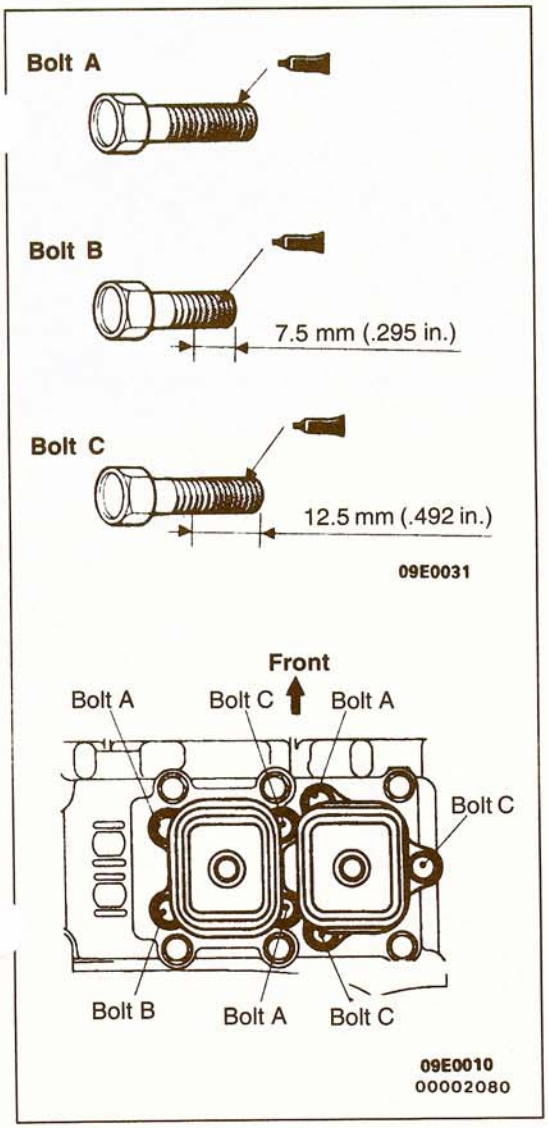


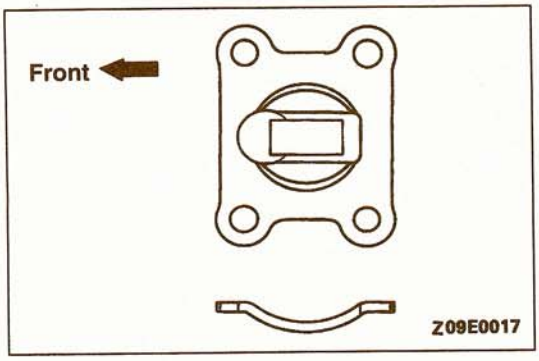


## INSTALLATION SERVICE POINTS

### ▶A◀ TRANSFER CONTROL LEVER ASSEMBLY/ TRANSMISSION CONTROL LEVER ASSEMBLY INSTALLATION

(1) Remove the adhesive sticking to the lever assembly mounting bolts.
(2) Use a tap (M8×1.25) to remove the adhesive sticking to the screw holes in the control housing, and clean it by blowing in air.
(3) Apply specified adhesive to the threads of the lever assembly mounting bolts.
Apply adhesive to the whole thread for bolt A, and to the areas shown in the illustration for bolts B and C.

**Specified adhesive:**
**3M Stud Locking No. 4170 or equivalent**

(4) The dimensions of the mounting bolts vary according to their mounting locations, so do not confuse them when installing.

| Bolt | O.D.×Length mm (in.) | Bolt identification |
|---|---|---|
| "4" | [4] 8×22 (.3×.9) | "4" D×L  Z09Y512 |
| "4" | [4] 8×18 (.3×.7) | |
| "4" | [4] 8×23 (.3×.9) | |

### ▶B◀ STOPPER PLATE INSTALLATION

Install the stopper plate to the transmission control lever in the direction shown in the illustration.

# TRANSMISSION AND TRANSFER ASSEMBLY

22100350017

## REMOVAL AND INSTALLATION

**Pre-removal and Post-installation Operation**
- Transmission and Transfer Control Lever Assembly Removal and Installation (Refer to P.22-9.)
- Transfer Case Protector Removal and Installation
- Front Exhaust Pipe Removal and Installation
- Transfer Oil Draining and Supplying (Refer to P.22-5.)
- Front and Rear Propeller Shaft Removal and Installation (Refer to GROUP 25 – Propeller Shaft.)

| | Nm | ft.lbs. | O.D. × Length mm (in.) | Bolt identification |
|---|---|---|---|---|
| A | 75 | 54 | "7" 12 × 40 (.5 × 1.6) | "7" D × L 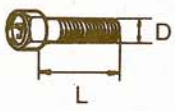 Z09Y512 |
| B | 90 | 65 | "7" 12 × 55 (.5 × 2.2) | |
| C | 31 | 22 | "7" 10 × 55 (.4 × 2.2) | |
| D | 36 | 26 | "7" 10 × 40 (.4 × 1.6) | |
| E | 75 | 54 | "7" 12 × 35 (.5 × 1.4) | |
| F | 42 | 30 | "7" 10 × 30 (.4 × 1.2) | |
| G | 75 | 54 | "7" 12 × 50 (.5 × 2.0) | |

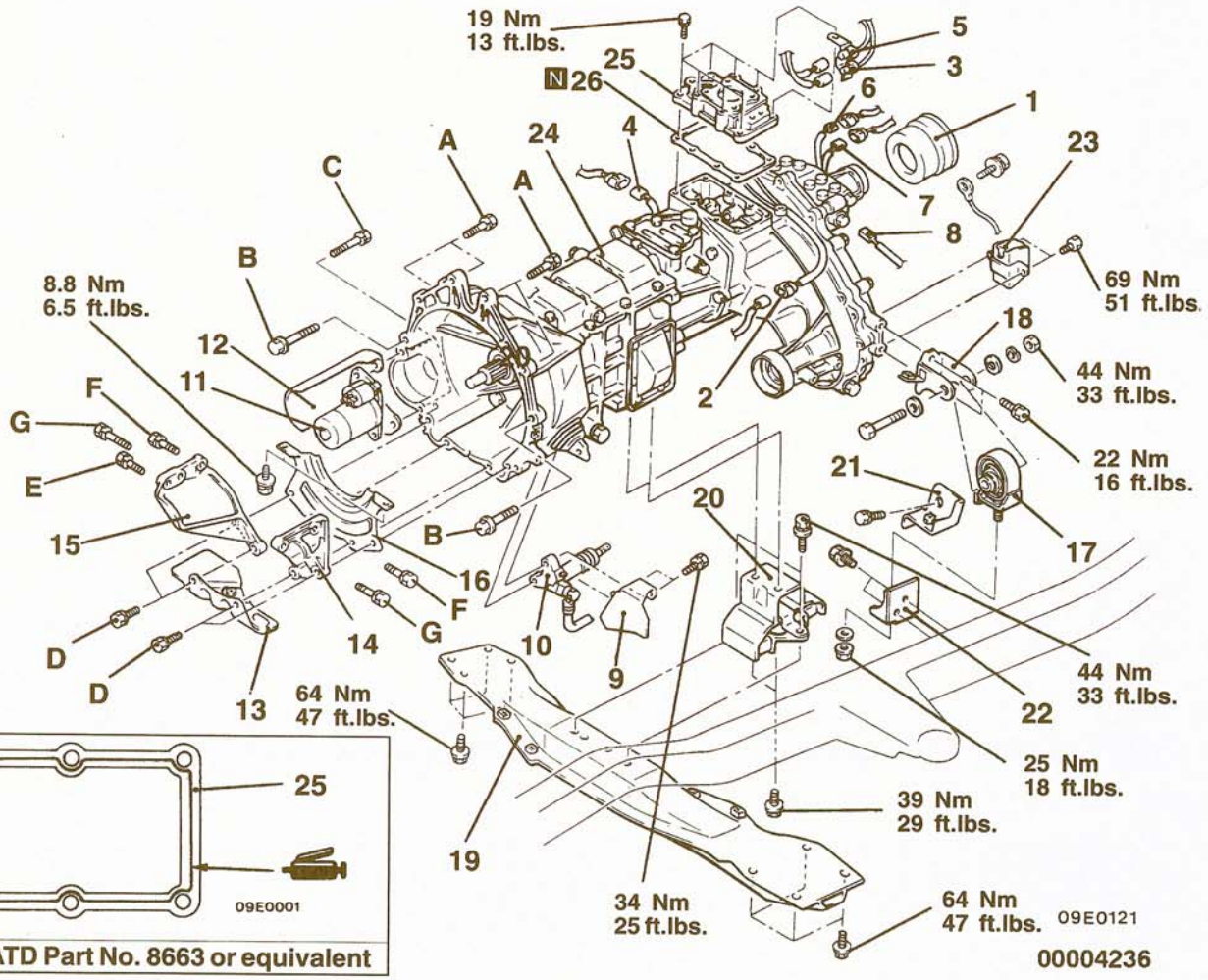





TSB Revision

**Removal steps**

1. Dust seal guard
2. HI/LO detection switch connector
3. 2WD/4WD detection switch connector
4. Back-up light switch connector
5. Center differential lock detection switch connector
6. Center differential lock operation detection switch connector
7. 4WD operation detection switch
8. Speed sensor connector
9. Heat protector

◀A▶ 10. Clutch release cylinder connection

11. Starter motor
12. Starter cover
13. Heat protector
14. Transmission stay
15. Transmission stay
16. Bell housing cover

◀B▶ 17. Transfer roll stopper

18. Transfer mounting bracket
19. No. 2 crossmember
20. Engine mounting rear insulator
21. Transfer case protector bracket
22. Transfer support bracket
23. Mass damper

◀C▶ ▶B◀ 24. Transmission and transfer assembly

▶A◀ 25. Control housing

26. Gasket

## REMOVAL SERVICE POINTS

### ◀A▶ CLUTCH RELEASE CYLINDER REMOVAL

Remove the clutch release cylinder (with the clutch hose connected to it) from the transmission, and suspend it from the body by using a piece of wire or a similar method.

### ◀B▶ TRANSFER ROLL STOPPER REMOVAL

Before removing the transfer roll stopper, use a transmission jack to hold the transmission and transfer assembly.

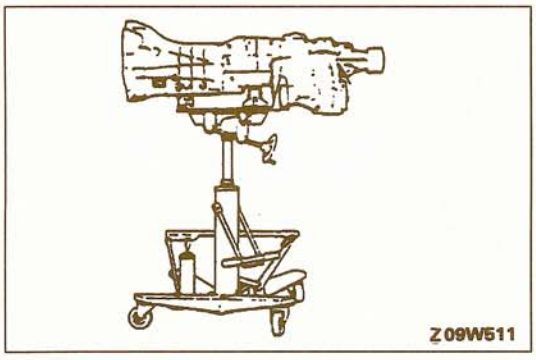


### ◀C▶ TRANSMISSION AND TRANSFER ASSEMBLY REMOVAL

**Caution**

**When removing the transmission and transfer assembly from the engine, care must be taken not to shake or rock with force, because to do so might cause damage to the end of the main drive gear, the pilot bearing, or the clutch disc, etc.**

(1) Disconnect the transmission and transfer assembly from the engine by pulling it slowly toward the rear of the vehicle.

(2) When the transmission and transfer assembly are lowered, tilt the front of the transmission downward and slowly lower forward, while using care to make sure that the rear of the transmission does not interfere with the No. 4 crossmember.

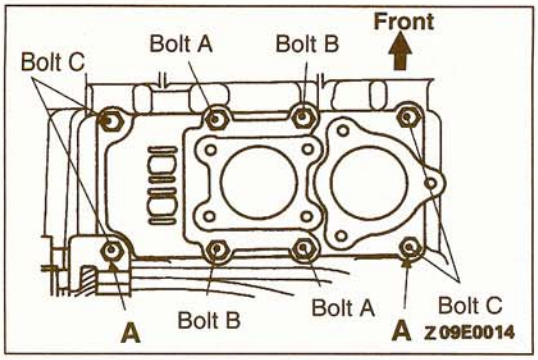


## INSTALLATION SERVICE POINTS

### ▶A◀ CONTROL HOUSING INSTALLATION

(1) Remove the adhesive sticking to the control housir mounting bolts at **A** section.
(2) Use a tap (M8×1.25) to remove the adhesive sticking to the screw holes at **A** section.
(3) Apply specified adhesive to the mounting bolt threads at **A** section.

**Specified adhesive:**
**3M Stud Locking No. 4170 or equivalent**

(4) The dimensions of the mounting bolts vary according to their mounting locations, so do not confuse them when installing.

| Bolt | O.D.×Length mm (in.) | Bolt identification |
|---|---|---|
| A | "7" 8×40 (.3×1.6) | "7" D×L  Z09Y512 |
| B | "7" 8×40 (.3×1.6) (Reamer bolt) | |
| C | "7" 8×25 (.3×1.0) | |



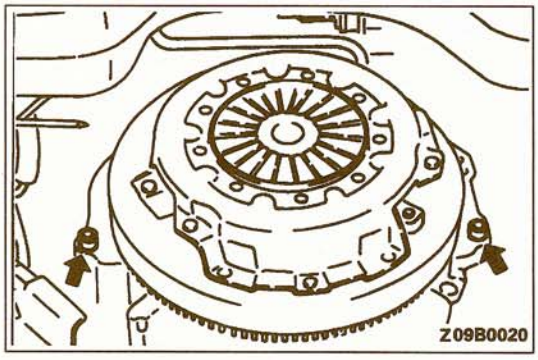


### ▶B◀ TRANSMISSION AND TRANSFER ASSEMBLY INSTALLATION

On the engine side, there are two centering locations. Make sure that the transmission mounting bolt holes are aligned with them before mounting the transmission and transfe assembly to the engine.

# MANUAL TRANSMISSION OVERHAUL <V5MT1>

## CONTENTS

22209000091


CENTER DIFFERENTIAL CASE ..... 40
COUNTERSHAFT ..... 24
FRONT OUTPUT SHAFT ..... 38
GEAR SHIFT CASE ..... 25
GENERAL INFORMATION ..... 2
H-L SHIFT FORK ..... 37
MAINSHAFT ..... 21
REAR OUTPUT SHAFT ..... 39
SPECIAL TOOLS ..... 9
SPECIFICATIONS ..... 3
- General Specifications ..... 3
- Sealants, Adhesive and Grease ..... 8
- Service Specifications ..... 3
- Snap Rings and Spacers Adjustment ..... 4
- Torque Specifications ..... 6
- Transmission Model Table ..... 3

TRANSFER ..... 28
TRANSFER DRIVE SHAFT ..... 43
TRANSMISSION ..... 12
2-4WD SYNCHRONIZER ..... 41

# GENERAL INFORMATION

22200010079

## MODEL V5MT1-6

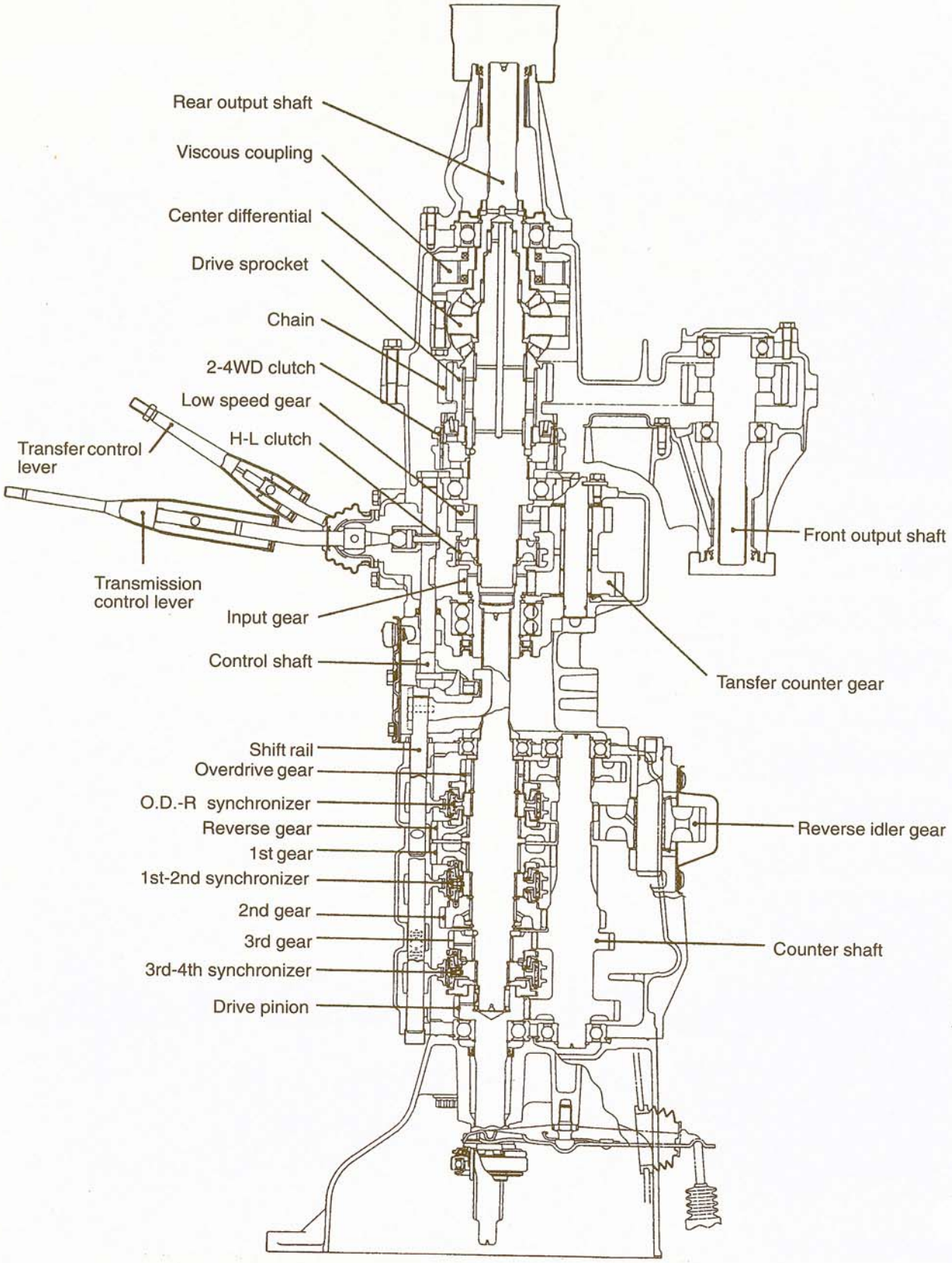


ATRM0658

**TSB Revision**

# SPECIFICATIONS

22200020096

## TRANSMISSION MODEL TABLE

| Transmission Model | Gear ratio | Speedometer gear ratio | Vehicle Model | Engine Model |
|---|---|---|---|---|
| V5MT1-6-AEL | A | 25/8 | MONTERO | 6G72 |
| V5MT1-6-AEAL | A | 25/8 | MONTERO | 6G72 |

## GENERAL SPECIFICATIONS

| Items | | A |
|---|---|---|
| Transmission gear ratio | 1st | 3.918 |
| | 2nd | 2.261 |
| | 3rd | 1.395 |
| | 4th | 1.000 |
| | 5th | 0.829 |
| | Reverse | 3.925 |
| Transfer gear ratio | High | 1.000 |
| | Low | 1.925 |

## SERVICE SPECIFICATIONS

22200030075

### Transfer

| Items | Standard value | Limit |
|---|---|---|
| Input gear bearing end play mm (in.) | 0–0.06 (0–.0024) | — |
| Input gear end play mm (in.) | 0–0.06 (0–.0024) | — |
| H-L clutch hub end play mm (in.) | 0–0.08 (0–.0031) | — |
| Rear output shaft end play mm (in.) | 0–0.1 (0–.004) | — |
| Front output shaft end play mm (in.) | 2 (.08) or less | — |
| Center differential end play mm (in.) | 0.02–0.1 (.0008–.004) | — |
| Differential lock hub end play mm (in.) | 0–0.08 (0–.0031) | — |
| 2-4WD synchronizer hub end play mm (in.) | 0–0.08 (0–.0031) | — |
| Rear output shaft bearing end play mm (in.) | 0–0.08 (0–.0031) | — |
| Clearance between rear surface of outer synchronizer ring and drive sprocket mm (in.) | — | 0.3 (.012) |

## SNAP RINGS AND SPACERS ADJUSTMENT

22201200024

### Transfer

| Part name | Thickness mm (in.) | Identification symbol | Part No. |
|---|---|---|---|
| Snap ring (For adjustment of input gear bearing end play) | 2.30 (.091) | — | MD704199 |
| | 2.35 (.093) | Red | MD704200 |
| | 2.40 (.094) | White | MD704201 |
| | 2.45 (.096) | Blue | MD704202 |
| | 2.50 (.098) | Green | MD704203 |
| Snap ring (For adjustment of input gear assembly end play) | 2.70 (.106) | Purple | MD704204 |
| | 2.75 (.108) | Pink | MD704205 |
| | 2.80 (.110) | Yellow | MD704206 |
| | 2.85 (.112) | White | MD704207 |
| | 2.90 (.114) | Blue | MD704208 |
| Snap ring (For adjustment of H-L clutch hub end play) | 2.14 (.084) | — | MD704212 |
| | 2.21 (.087) | Yellow | MD704213 |
| | 2.28 (.090) | White | MD704214 |
| | 2.35 (.093) | Blue | MD704215 |
| | 2.42 (.095) | Red | MD704216 |
| Spacer (For adjustment of rear output shaft, center differential end play) | 0.84 (.033) | 84 | MD734326 |
| | 0.93 (.037) | 93 | MD734327 |
| | 1.02 (.040) | 02 | MD734328 |
| | 1.11 (.044) | 11 | MD734329 |
| | 1.20 (.047) | 20 | MD734330 |
| | 1.29 (.051) | 29 | MD734331 |
| | 1.38 (.054) | 38 | MD734332 |
| | 1.47 (.058) | 47 | MD734333 |
| | 1.56 (.061) | 56 | MD734334 |
| | 1.65 (.065) | 65 | MD734335 |
| | 1.74 (.069) | 74 | MD734336 |
| | 1.83 (.072) | 83 | MD734337 |
| | 1.92 (.076) | 92 | MD734338 |
| | 2.01 (.079) | 01 | MD734339 |

**TSB Revision**

| Part name | Thickness mm (in.) | Identification symbol | Part No. |
|---|---|---|---|
| Snap ring (For adjustment of rear output shaft bearing end play) | 2.26 (.089) | — | MD734311 |
| | 2.33 (.072) | Red | MD734312 |
| | 2.40 (.094) | White | MD734313 |
| | 2.47 (.097) | Blue | MD734314 |
| Snap ring (For adjustment of 2-4WD synchronizer hub end play) | 2.56 (.101) | — | MD738393 |
| | 2.63 (.104) | Red | MD738394 |
| | 2.70 (.106) | White | MD738395 |
| | 2.77 (.109) | Blue | MD738396 |
| | 2.84 (.112) | Yellow | MD738397 |
| Snap ring (For adjustment of differential lock hub end play) | 2.56 (.101) | — | MD738386 |
| | 2.63 (.104) | Red | MD738387 |
| | 2.70 (.106) | White | MD738388 |
| | 2.77 (.109) | Blue | MD738389 |
| | 2.84 (.112) | Yellow | MD738390 |
| | 2.91 (.115) | Green | MD738391 |
| | 2.98 (.117) | Purple | MD738392 |
| Spacer (For adjustment of center differential end play) | 1.30 (.051) | 30 | MD734315 |
| | 1.38 (.054) | 38 | MD734316 |
| | 1.46 (.057) | 46 | MD734317 |
| | 1.54 (.061) | 54 | MD734318 |
| | 1.62 (.064) | 62 | MD734319 |
| | 1.70 (.067) | 70 | MD734320 |
| | 1.78 (.070) | 78 | MD734321 |
| | 1.86 (.073) | 86 | MD734322 |
| | 1.94 (.076) | 94 | MD734323 |
| | 2.02 (.080) | 02 | MD734324 |
| | 2.10 (.083) | 10 | MD734325 |

## TORQUE SPECIFICATIONS

22201210027

### Transmission

| Items | Nm | ft.lbs. |
|---|---|---|
| Clutch housing mounting bolts | 119 | 86 |
| Transfer case adapter to transmission case mounting bolts | 41 | 30 |
| Transfer case adapter to transfer case mounting bolts | 36 | 26 |
| Gear shift case bolts | 24 | 17 |
| Power take-off cover bolts | 19 | 14 |
| Adapter cover bolts | 24 | 17 |
| Mainshaft locking nut | 260 | 188 |
| Reverse shaft lock piece bolt | 41 | 30 |
| Clutch release fork fulcrum | 58 | 42 |
| Backup light switch | 35 | 25 |
| Gear shift case poppet plugs | 40 | 29 |
| Neutral return plunger plugs | 36 | 26 |
| Poppet plug on transfer case adapter | 48 | 35 |

### Transfer

| Items | Nm | ft.lbs. |
|---|---|---|
| Chain cover bolt | 36 | 26 |
| Side cover bolt | 9.0 | 7.0 |
| Rear cover bolt | 36 | 26 |
| Cover bolt | 19 | 14 |
| Select plunger plug | 33 | 24 |
| Lock plate bolt | 19 | 14 |
| Rear output shaft lock nut | 120 | 90 |
| Speedometer gear clamp bolt | 19 | 14 |
| Detection switch | 36 | 26 |
| Poppet plug | 36 | 26 |
| H-L shift rail plug | 33 | 24 |
| Plunger boss bolt | 33 | 24 |
| Oil dam cover | 9 | 6.5 |
| Bearing retainer | 19 | 14 |
| Dynamic damper | 70 | 51 |

**TSB Revision**

| Items | Nm | ft.lbs. |
|---|---|---|
| Center differential case front | 65 | 47 |

**Control Lever assembly**

| Items | Nm | ft.lbs. |
|---|---|---|
| Control lever bolt | 19 | 14 |
| Stopper bracket nut | 19 | 14 |

## SEALANTS, ADHESIVE AND GREASE

22200050026

### TRANSMISSION

| Items | Specified sealants and grease |
|---|---|
| Adapter cover | Mitsubishi genuine sealant Part No. MD997740 or equivalent |
| Clutch housing gasket | |
| Gear shift case gasket | |
| Transfer case adapter gasket | |
| Air breather | 3M Super Weatherstrip No. 8001 or equivalent |
| Clutch housing oil seal | Multipurpose grease SAE J310, NLGI No. 2 |
| Gear shift case screw plug | 3M STUD Locking No. 4170 or eqivalent |
| Adapter mounting bolt | |

### TRANSFER

| Items | Specified sealants, adhesive and grease |
|---|---|
| Chain cover gasket | 3M ATD Part No. 8660 or equivalent |
| Cover (gasket) | |
| Rear cover gasket | |
| Poppet plug | |
| Plug | |
| Return spring plug | 3M Super Weatherstrip No. 8001 or equivalent |
| Cover mounting bolt | 3M STUD Locking No. 4170 or equivalent |
| Bearing retainer mounting bolt | |
| Neutral return plunger (A), (B) | Multipurpose grease SAE J310, NLGI No. 2 |

### CONTROL LEVER ASSEMBLY

| Items | Specified sealants |
|---|---|
| Control housing cover gasket | 3M ATD Part No. 8660 or equivalent |
| Stopper plate gasket | |
| Stopper bracket assembly mounting bolt – special bolt Seat | |
| Stopper bracket assembly mounting bolt – special bolt Threaded part | 3M Scotch Grip No. 2353 or equivalent |

# SPECIAL TOOLS

22200060074

## TRANSMISSION

| Tool | Tool number and name | Supersession | Application |
|---|---|---|---|
| 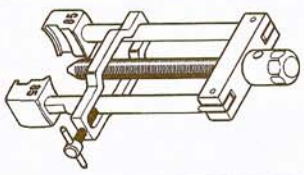 | MD998020<br>Bearing puller | MD998020 | Removal of countershaft bearing, mainshaft bearing, drive pinion bearing |
| 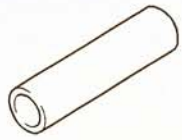 | MD998323<br>Bearing installer | MD998323-01 | Installation of countershaft rear bearing |
| 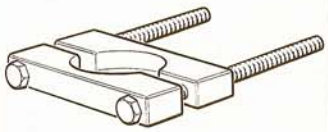 | MD998801<br>Bearing remover | MD998348-01 | Removal of 3rd-4th speed synchronizer hub |
| 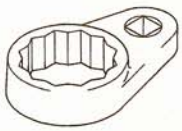 | MD998809<br>Lock nut wrench (41) | MD998809-01 | Removal and installation of mainshaft lock nut |
| 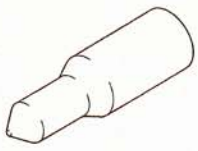 | MD998811<br>Bearing puller adapter | MD998811 | Use with MD998020 |
|  | MD998812<br>Installer cap | GENERAL SERVICE TOOL | Use with installer and adapter |
|  | MD998814<br>Installer – 200 | MIT304180 | Use with installer cap and adapter |
|  | MD998816<br>Installer adapter (30) | GENERAL SERVICE TOOL | Installation of each bearing |
|  | MD998817<br>Installer adapter (34) | GENERAL SERVICE TOOL | Installation of each bearing |

| Tool | Tool number and name | Supersession | Application |
|---|---|---|---|
|  | MD998820<br>Installer adapter (42) | MIT215013 | Installation of each bearing |
|  | MD998823<br>Installer adapter (48) | MD998823 | Installation of each bearing |
|  | MH061405<br>Dummy bearing | MH061405-01 | Supporting of countershaft at time of transmission counter-shaft bearing installation |
| 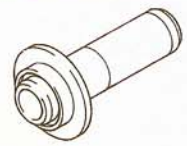 | MH061407<br>Oil seal installer | MH061407-01 | Installation of clutch housing oil seal |

## TRANSFER

| Tool | Tool number and name | Supersession | Application |
|---|---|---|---|
|  | MD998192<br>Counter gear bearing puller | MD998192 | Installation of drive shaft bearing |
| 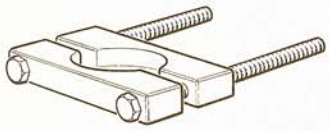 | MD998801<br>Bearing removal | MD998348-01 | Removal and installation of front output shaft bearing. Removal of clutch hub |
|  | MD998812<br>Installer cap | GENERAL SERVICE TOOL | Use with installer and adapter |
|  | MD998813<br>Installer – 100 | GENERAL SERVICE TOOL | Use with installer cap and adapter |
|  | MD998814<br>Installer – 200 | MIT304180 | Use with installer cap and adapter |

TSB Revision

| Tool | Tool number and name | Supersession | Application |
|---|---|---|---|
|  | MD998820<br>Installer adapter (42) | MIT215013 | Installation of each bearing |
|  | MD998822<br>Installer adapter (46) | MD998822-01 | Installation of each bearing |
|  | MD998823<br>Installer adapter (48) | MD998823 | |
|  | MD998824<br>Installer adapter (50) | GENERAL<br>SERVICE TOOL | |
|  | MD998830<br>Installer adapter (66) | MD998830 | |
| 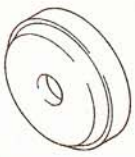 | MB990929<br>Installer adapter | MB990929 | Installation of each oil seal |
| 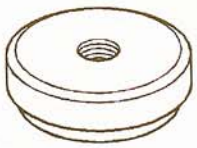 | MB990934<br>Installer adapter | MB990934 | Installation of each oil seal |
|  | MB990936<br>Installer adapter | MB990936 | Installation of each oil seal |
|  | MB990938<br>Installer bar | MB990938 | Installation of each oil seal |

**TSB Revision**

# TRANSMISSION

22200580020

## DISASSEMBLY AND REASSEMBLY

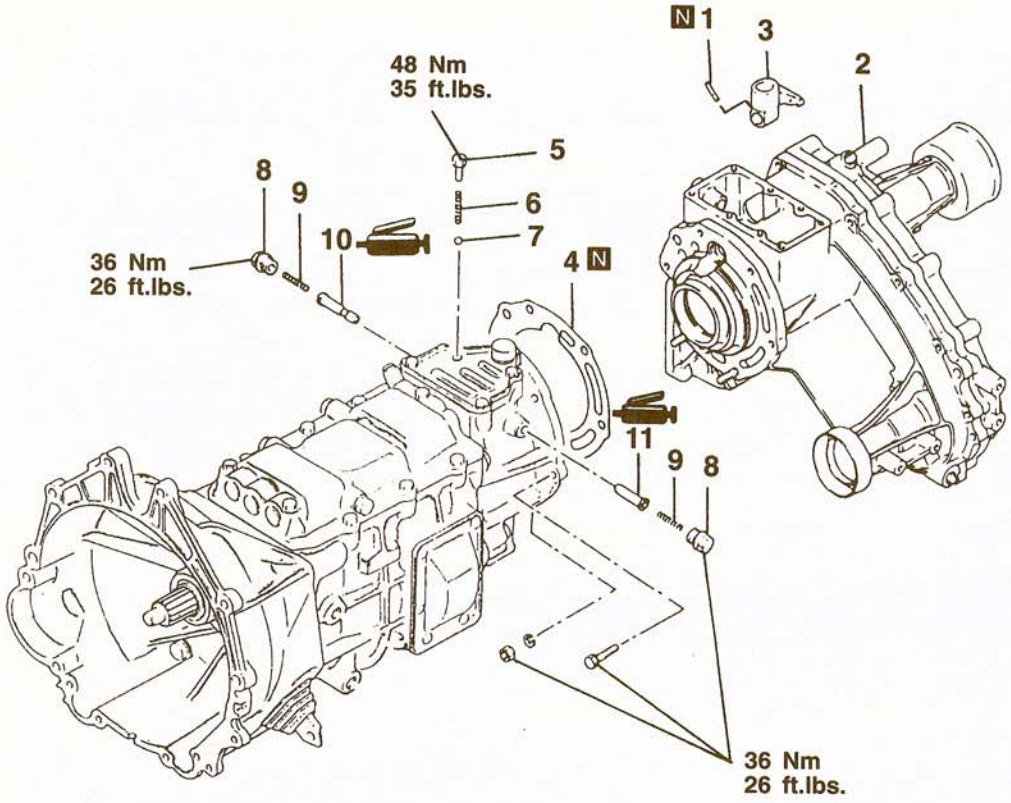


Lubricate all internal parts with engine oil during reassembly.

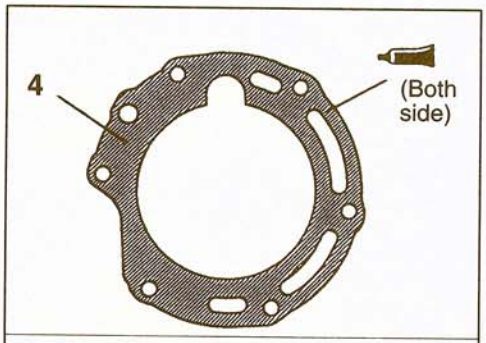


**Sealant:**
**3M ATD Part No.8660 or equivalent**

ATRM0778

**Disassembly steps**

▶O◀ 1. Spring pin
2. Transfer assembly
3. Change shifter
4. Adapter gasket
5. Plug
6. Spring
7. Steel ball
8. Seal plug
9. Neutral return spring
▶L◀ 10. Neutral return plunger (B)
▶L◀ 11. Neutral return plunger (A)

TSB Revision

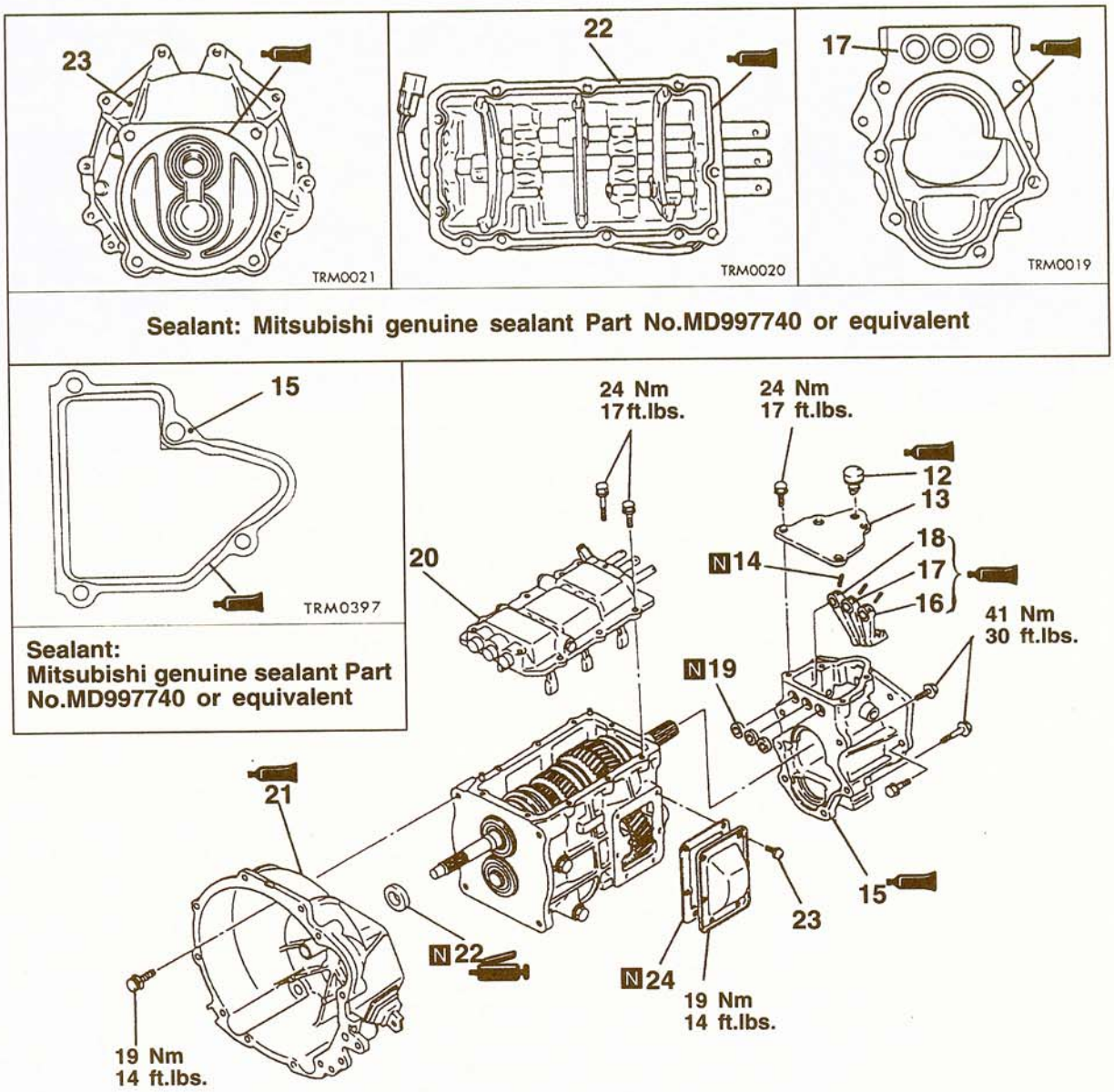


**Disassembly steps**

- ▶N◀ 12. Air breather
- ▶R◀ 13. Adapter cover
- ▶Q◀ 14. Spring pin
- ▶M◀ 15. Transfer case adapter
- ▶M◀ 16. 1st & 2nd gear shift jaw
- ▶M◀ 17. 3rd & 4th gear shift jaw
- ▶M◀ 18. 5th & Rev. gear shift jaw
- 19. Seal ring
- 20. Gear shift lower case assembly
- ▶K◀ 21. Clutch housing assembly
- ▶J◀ 22. Oil Seal
- 23. Transmission power take off cover
- 24. Power take off cover gasket

**TSB Revision**

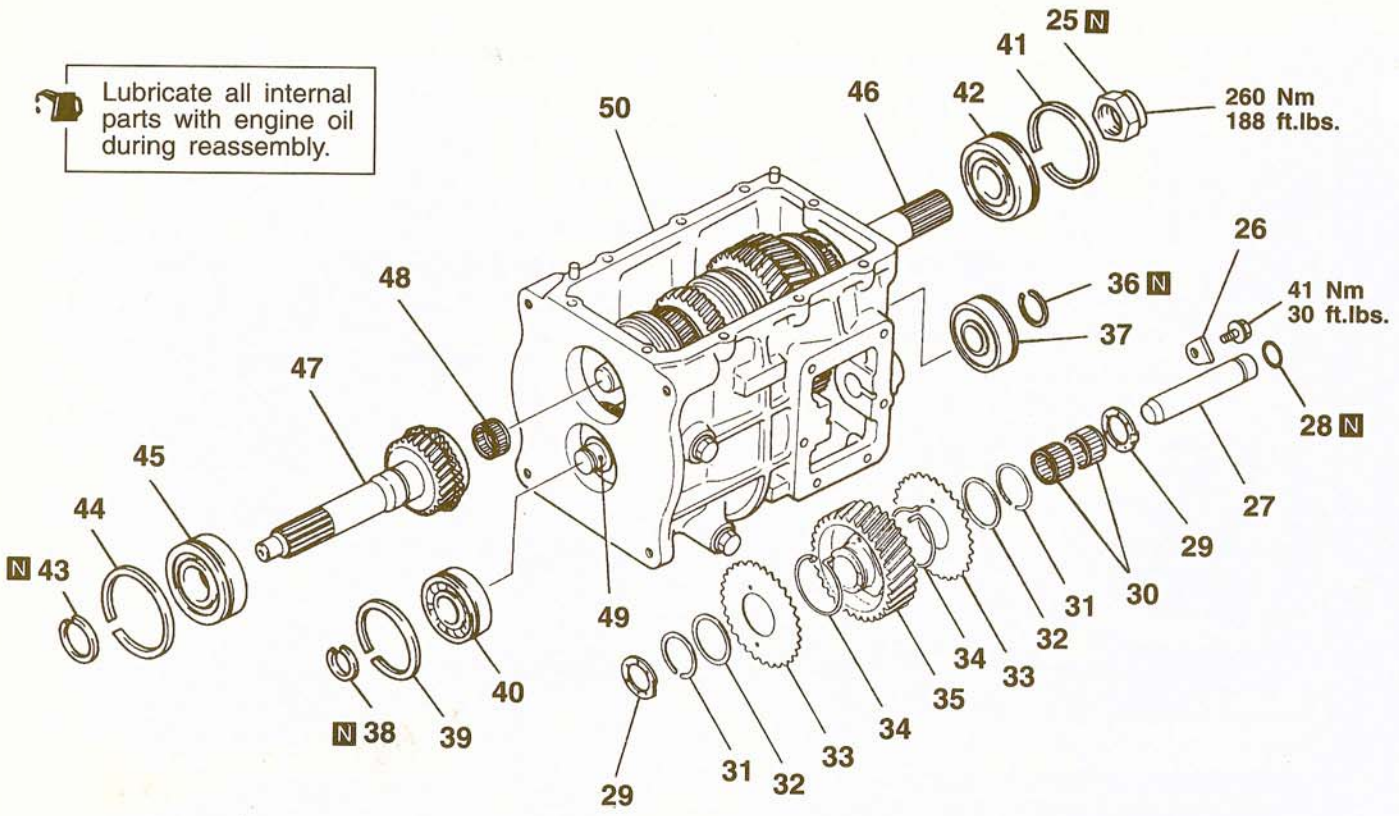


**Disassembly steps**

- ◀A▶ 25. Locking nut
- 26. Lock piece
- ◀B▶ 27. Reverse shaft
- 28. O-ring
- 29. Side washer
- 30. Needle bearing
- 31. Snap ring
- 32. Spacer
- 33. Sub gear
- 34. Spring
- 35. Reverse gear
- 36. Snap ring
- ◀C▶ 37. Ball bearing
- 38. Snap ring
- 39. Snap ring
- ◀C▶ 40. Ball bearing
- 41. Snap ring
- ◀D▶ 42. Ball bearing
- 43. Snap ring
- 44. Snap ring
- ◀D▶ 45. Ball bearing
- ◀E▶ 46. Mainshaft assembly
- ◀E▶ 47. Drive pinion
- 48. Pilot bearing
- ◀F▶ 49. Countershaft
- 50. Transmission case

**Reassembly steps**

- 50. Transmission case
- ▶A◀ 49. Countershaft assembly
- ▶B◀ 45. Ball bearing
- 43. Snap ring
- ▶C◀ 47. Drive pinion
- 44. Snap ring
- ▶C◀ 48. Pilot bearing
- ▶C◀ 46. Mainshaft assembly
- 41. Snap ring
- ▶D◀ 42. Ball bearing
- 39. Snap ring
- ▶E◀ 40. Ball bearing
- 38. Snap ring
- ▶F◀ 37. Ball bearing
- 36. Snap ring
- ▶P◀ 35. Reverse gear
- 34. Spring
- ▶G◀ 33. Sub gear
- 32. Spacer
- 31. Snap ring
- 30. Needle bearing
- ▶H◀ 29. Side washer
- 28. O-ring
- 27. Reverse shaft
- 26. Lock piece
- ▶I◀ 25. Locking nut

**TSB Revision**

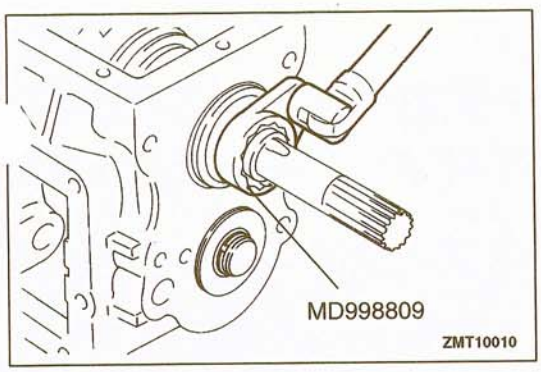


## DISASSEMBLY SERVICE POINTS

### ◀A▶ LOCKING NUT REMOVAL

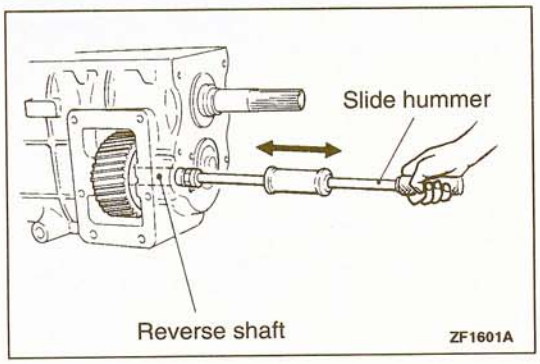


### ◀B▶ REVERSE SHAFT REMOVAL

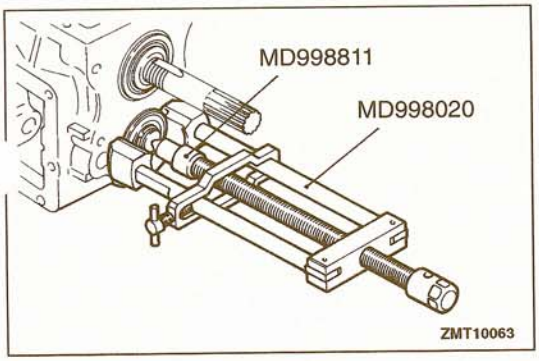


### ◀C▶ COUNTERSHAFT BALL BEARINGS REMOVAL

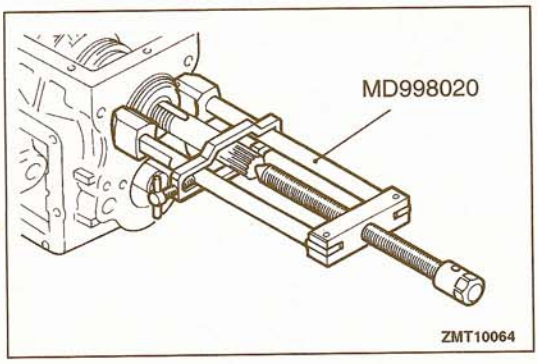


### ◀D▶ MAINSHAFT BALL BEARING / DRIVE PINION BALL BEARING REMOVAL

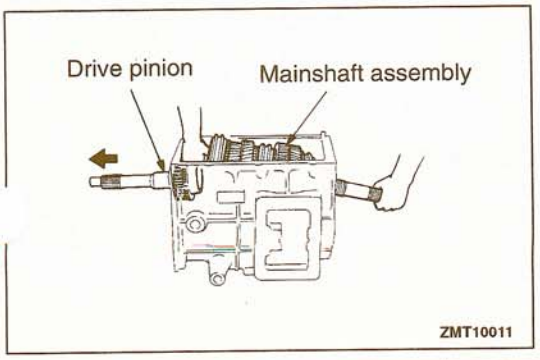


### ◀E▶ MAINSHAFT ASSEMBLY / DRIVE PINION REMOVAL

(1) Pull out the drive pinion to the front of the case. The gear diameter is larger than the case hole diameter so that the drive pinion cannot be removed at this point.
(2) Remove the mainshaft assembly from the case.
(3) Remove the drive pinion.

TSB Revision

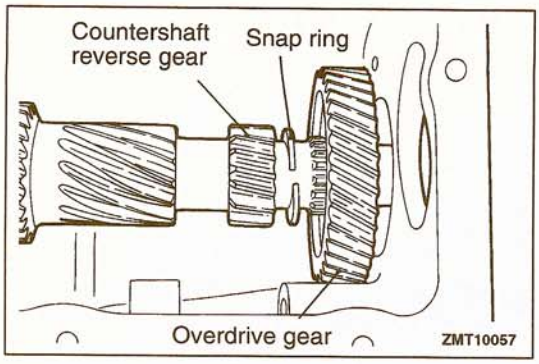


### ◀F▶ COUNTERSHAFT REMOVAL

(1) Move the snap ring from its groove toward the countershaft reverse gear.
(2) Move the overdrive gear as well toward the countersha reverse gear.
(3) Raise the countershaft a little and then lift it further up at its front end to remove from the transmission case.

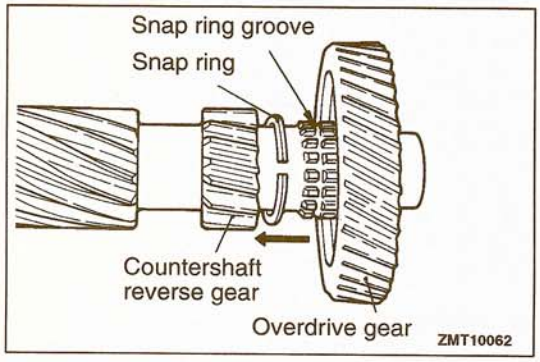


## REASSEMBLY SERVICE POINTS

### ▶A◀ COUNTERSHAFT INSTALLATION

(1) Move the snap ring and overdrive gear toward the countershaft reverse gear.
(2) Install the countershaft in the transmission case.

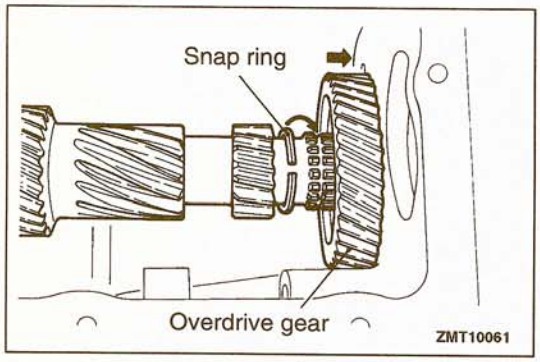


(3) Move the overdrive gear rearward.
(4) Put the snap ring in its groove.

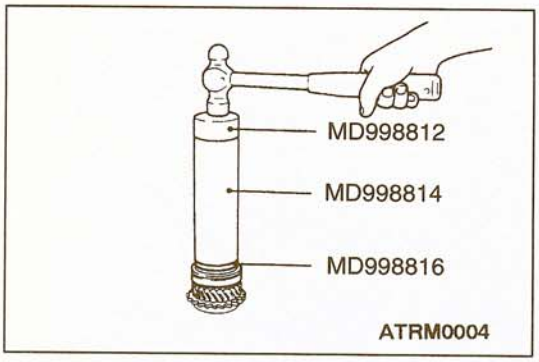


### ▶B◀ BALL BEARING INSTALLATION

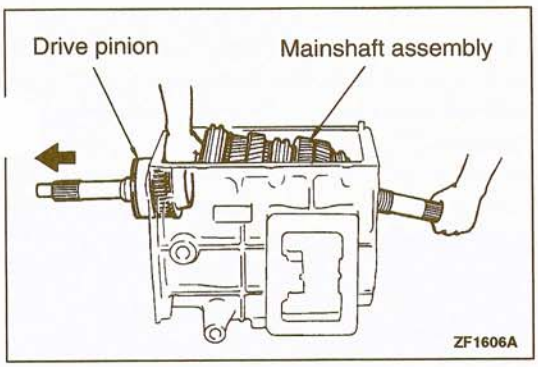


### ▶C◀ DRIVE PINION / PILOT BEARING / MAINSHAFT ASSEMBLY INSTALLATION

(1) Install the drive pinion to the transmission case, working from case inside and let it protrude from the case.
(2) Fit the snap ring in the ball bearing outer race groove.
(3) Insert the pilot bearing into the drive pinion rear hole.
(4) Install the mainshaft assembly to the case, working from case inside and insert its front end into the pilot bearing.
(5) Push in the drive pinion until the snap ring over the bearing comes into contact with the case front. When doing so, hold the mainshaft. If the front end of the mainshaft is disengaged from the pilot bearing, it can cause damage to the bearing.

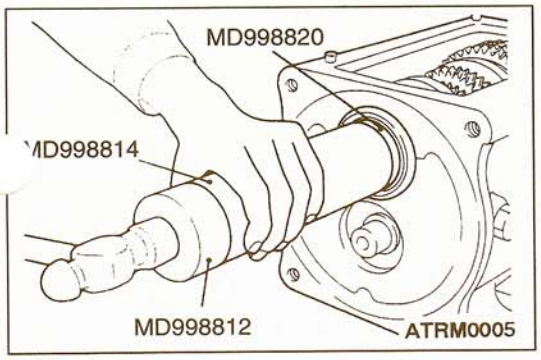


### ▶D◀ BALL BEARING INSTALLATION

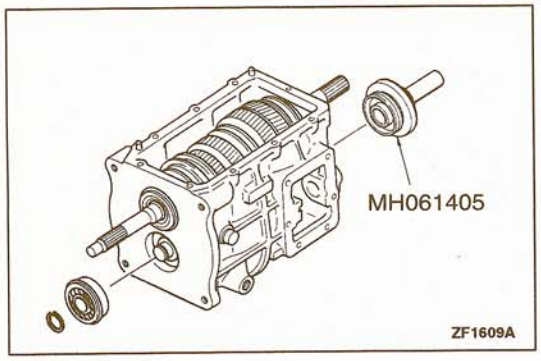


### ▶E◀ BALL BEARING INSTALLATION

(1) Fit the snap ring to the ball bearing outer race groove.
(2) Using the special tool, support the countershaft at the rear end.
(3) Using the special tool, install the ball bearing.
(4) Fit the snap ring to the countershaft front end groove.
(5) Remove the special tool.

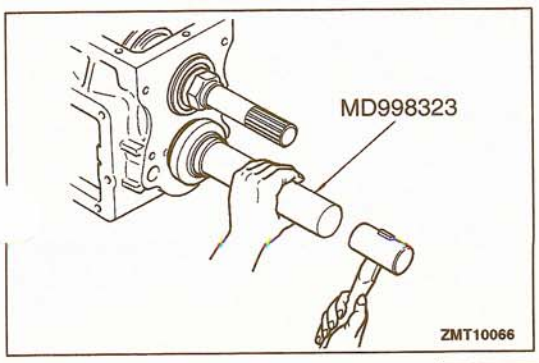


### ▶F◀ BALL BEARING INSTALLATION

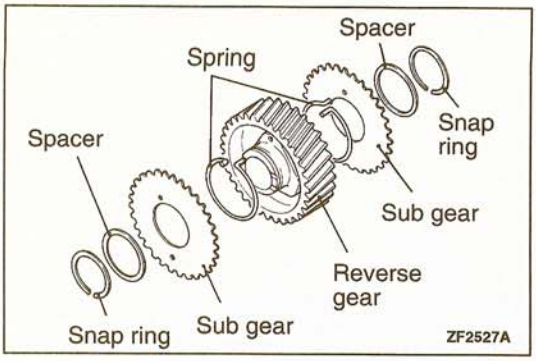


### ▶G◀ SUB GEAR INSTALLATION

(1) Install the spring so that the long end is directed toward the gear, and combine the sub gear and spacer into an assembly using the snap rings.
(2) Turn the sub gear to align all of the through holes.
(3) Secure the through holes with a screwdriver, etc., and install the sub gear to the transmission case.

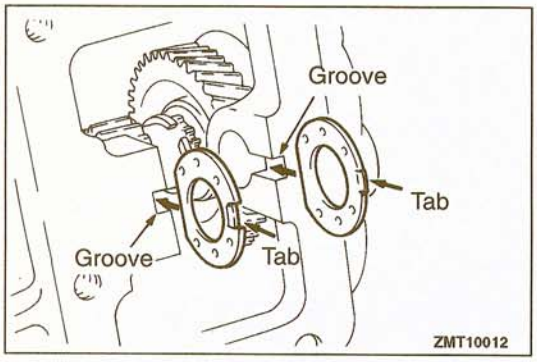


### ▶H◀ SIDE WASHERS INSTALLATION

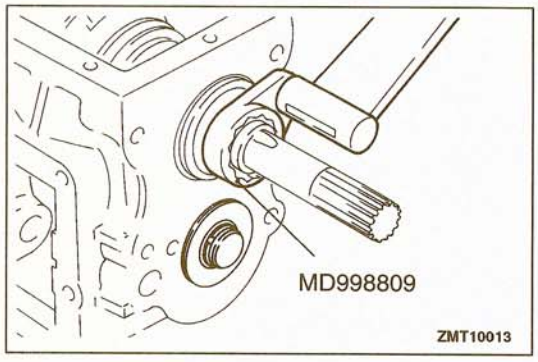


### ▶I◀ LOCKING NUT INSTALLATION

(1) Side the 1st-2nd gear synchronizer sleeve to the first speed side and the OD-R gear synchronizer sleeve to the reverse side for double meshing. This prevents the mainshaft from turning.
(2) Using the special tool, tighten the lock nut to specified torque.

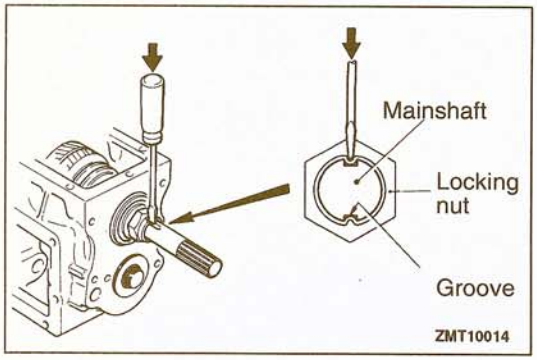


(3) Punch the lock nut into two grooves on the mainshaft.

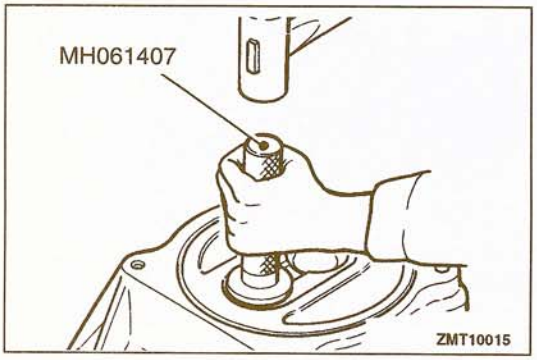


### ▶J◀ OIL SEAL INSTALLATION

(1) Using the special tool, drive the oil seal into the clutch housing.
(2) Apply specified grease to the oil seal lip.

**Specified grease:**
**Multipurpose grease SAE J310, NLGI No.2**

**TSB Revision**

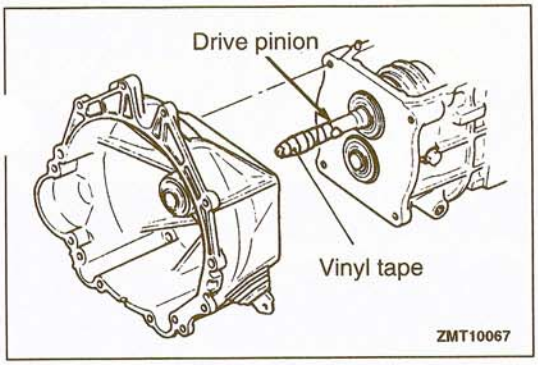


### ▶K◀ CLUTCH HOUSING INSTALLATION

(1) Apply specified sealant to the clutch housing on its surface that contacts the transmission case.

**Specified sealant:**
**Mitsubishi genuine sealant Part No.MD997740 or equivalent**

(2) Wind vinyl tape around the splined portion of the drive pinion to protect the oil seal against damage.
(3) Install the clutch housing to the transmission case and tighten bolts to specified torque.
(4) Remove the vinyl tape.

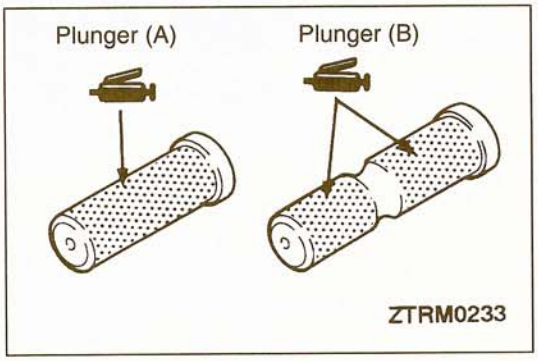


### ▶L◀ NEUTRAL RETURN PLUNGER (A) / NEUTRAL RETURN PLUNGER (B) INSTALLATION

Apply grease to the neutral return plungers (A) and (B) in the places shown in the illustration.

**Specified grease:**
**Multipurpose grease SAE J310, NLGI No.2**

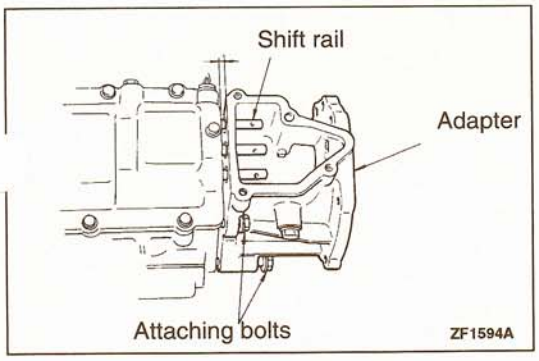


### ▶M◀ TRANSFER CASE ADAPTER / SHIFT JAWS INSTALLATION

(1) Apply specified sealant to the adapter on its surface that contacts the transmission case.

**Specified sealant:**
**Mitsubishi genuine sealant Part No.MD997740 or equivalent**

(2) Insert the shift rails into the shift rail holes of the transfer case adapter and install the adapter part way. If it is installed to the case completely, the shift jaws cannot be installed.

NOTE
When replacing the shift rails or the shift jaws, replace the shift rails and the shift jaws as a unit.

(3) Pre-coated bolts are used for the attaching bolts, so when reusing the bolts, apply sealant on the threads.

**Specified sealant:**
**3M STUD Locking No. 4170 or equivalent**

(4) Screw in adapter attaching bolts two pitches each.
(5) Install the three shift jaws to respective shift rails.
(6) Push the adapter into close contact with the case and tighten the six bolts to specified torque.

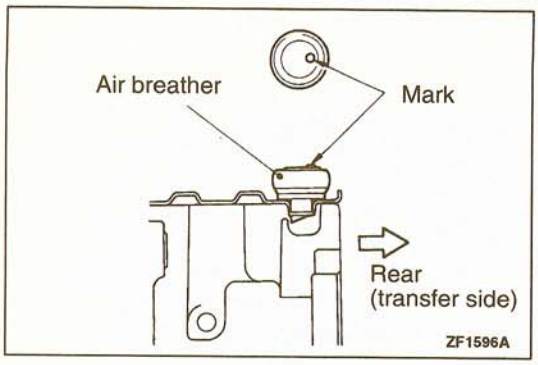


### ▶N◀ AIR BREATHER INSTALLATION

(1) Apply specified sealant to the press-fit portion of the air breather.

**Specified sealant:**
**Mitsubishi genuine sealant Part No.MD997740 or equivalent**

(2) Install the air breather with a mark toward rear.

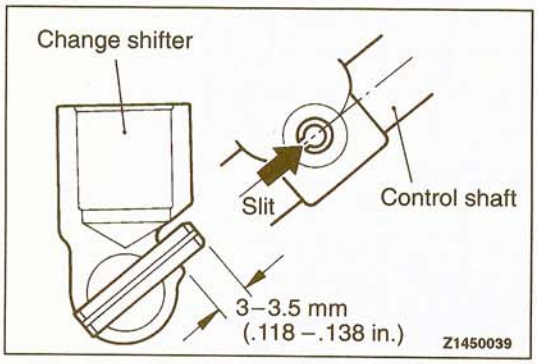


### ▶O◀ SPRING PIN INSTALLATION

(1) Drive the spring pin in using the pin punch.

**Caution**
**Do not reuse spring pin.**

(2) Drive the spring pin in with the slit in the spring pin parallel to the shaft center of the shift rail, so that the dimensions are as shown in the illustration.

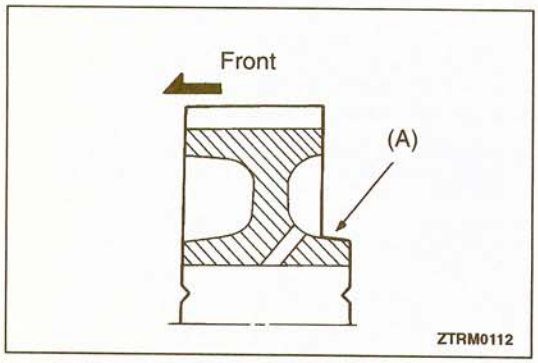


### ▶P◀ REVERSE GEAR INSTALLATION

Confirm the direction of reverse gear installation by observing the shape of portion (A) in the illustration.

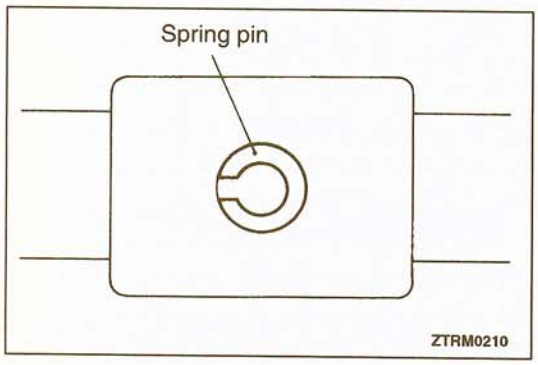


### ▶Q◀ SPRING PIN INSTALLATION

# MAINSHAFT

22200610026

## DISASSEMBLY AND REASSEMBLY

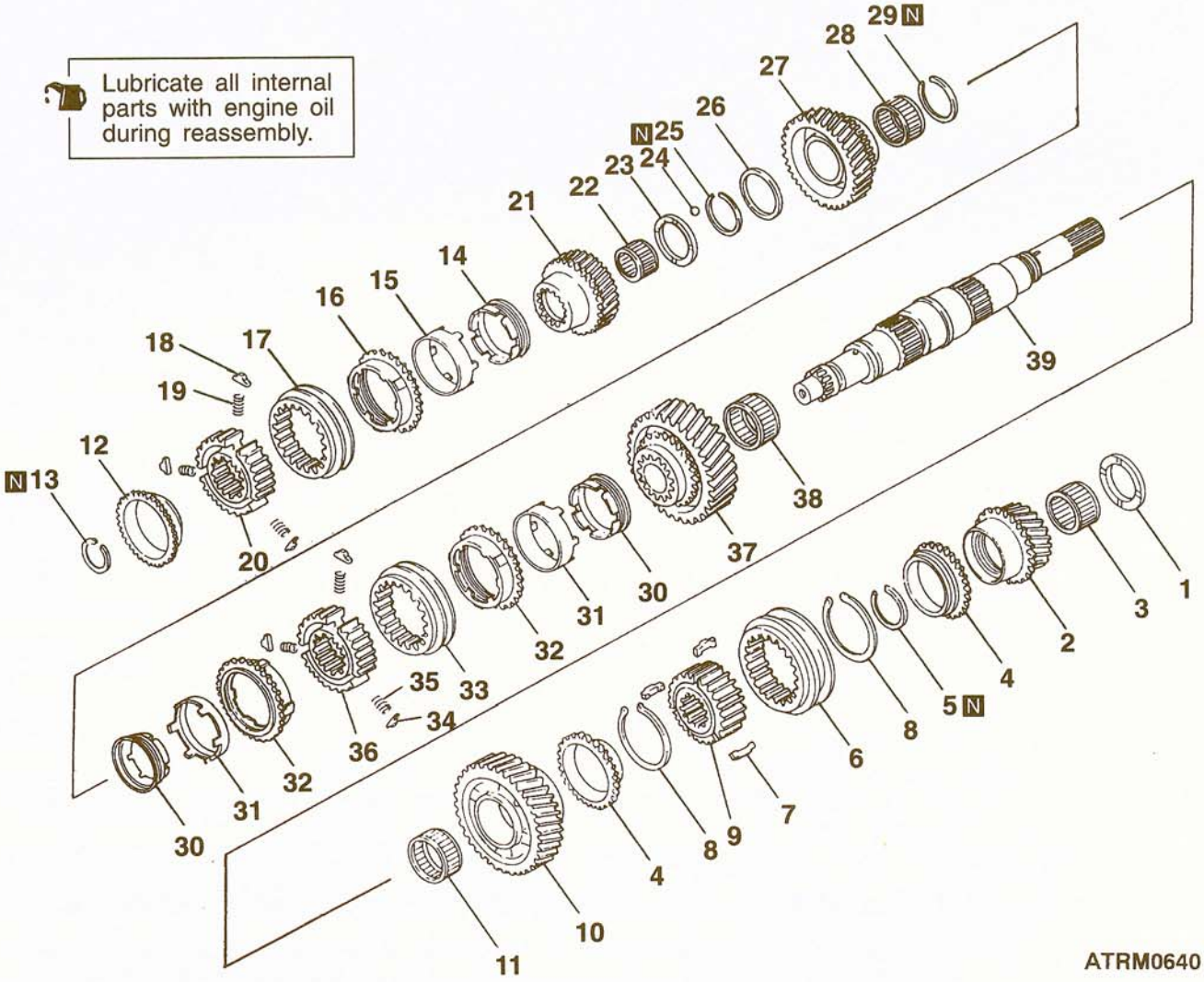


**Disassembly steps**

- ▶C◀ 1. Thrust washer No.3
- 2. Overdrive gear
- 3. Needle bearing
- 4. Synchronizer ring
- 5. Snap ring
- ▶B◀ 6. Synchronizer sleeve
- 7. Synchronizer key
- ▶A◀ 8. Synchronizer spring
- 9. Synchronizer hub
- 10. Reverse gear
- 11. Needle bearing
- 12. Synchronizer ring
- 13. Snap ring
- 14. Inner synchronizer ring
- 15. Synchronizer cone
- 16. Outer synchronizer ring
- ▶B◀ 17. Synchronizer sleeve
- 18. Synchronizer key
- 19. Synchronizer spring
- ◀A▶ 20. Synchronizer hub
- 21. Third gear
- 22. Needle bearing
- ▶C◀ 23. Thrust washer No.1
- 24. Steel ball
- 25. Snap ring
- ▶C◀ 26. Thrust washer No.2
- 27. Second gear
- 28. Needle bearing
- 29. Snap ring
- 30. Inner synchronizer ring
- 31. Synchronizer cone
- 32. Outer synchronizer ring
- ▶B◀ 33. Synchronizer sleeve
- 34. Synchronizer key
- 35. Synchronizer spring
- 36. Synchronizer hub
- 37. First gear
- 38. Needle bearing
- 39. Mainshaft

**TSB Revision**

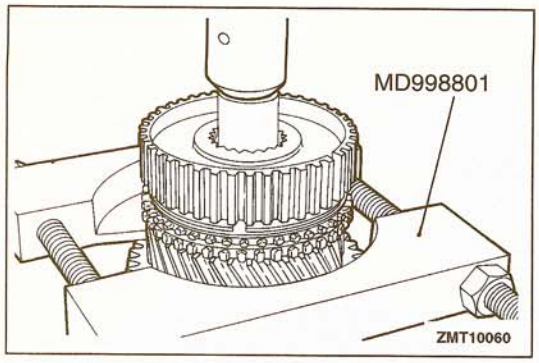


## DISASSEMBLY SERVICE POINT

### ◀A▶ SYNCHRONIZER HUB REMOVAL

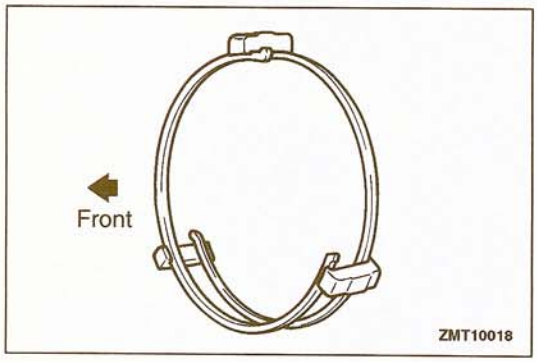


## REASSEMBLY SERVICE POINTS

### ▶A◀ SYNCHRONIZER SPRINGS INSTALLATION

(1) Note that the 1st-2nd synchronizer spring differs in shape from other synchronizer springs.
(2) Install the synchronizer spring in such a way that it will rest on the three synchronizer keys.
(3) When installing the synchronizer springs, make sure that the front and rear one are not faced in same direction.

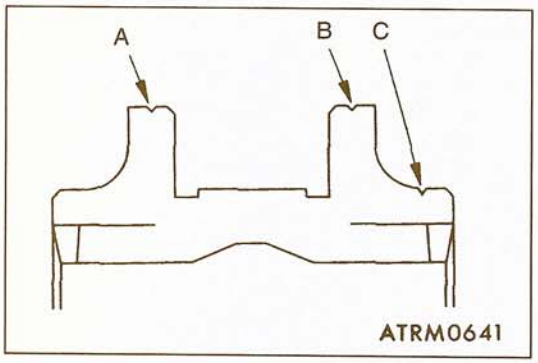


### ▶B◀ SYNCHRONIZER SLEEVES INSTALLATION

(1) The sections using the synchronizer sleeves are confirmed with the identification groove.

| Synchronizer sleeve usage sections | Identification groove position |
|---|---|
| First-Second, Third-Fourth | A, B, C |
| Overdrive-Reverse | A, B |

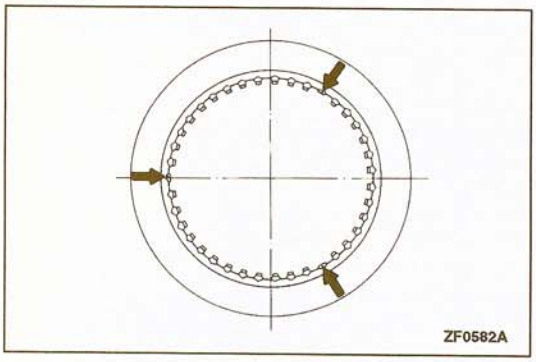


(2) Install the synchronizer sleeve with its low tooth portions at synchronizer key positions.

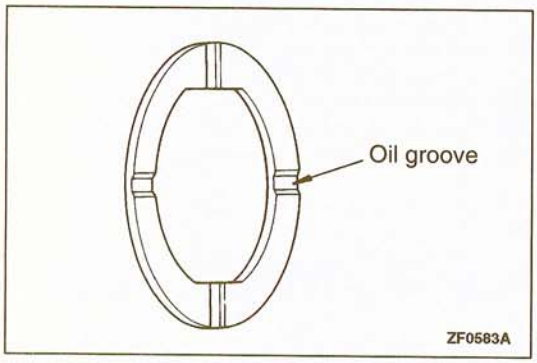


### ▶C◀ THRUST WASHERS INSTALLATION

Install the thrust washers with oil grooved side toward the gear.

TSB Revision

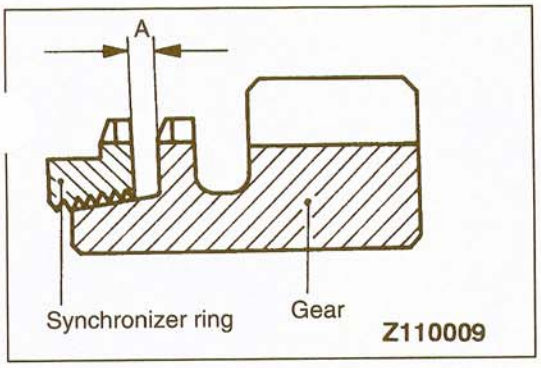


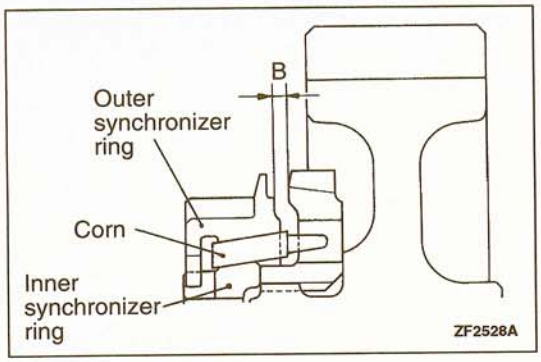


## INSPECTION

22200620012

### SYNCHRONIZER RING

**Caution**
**When the paper lining synchronizer ring is washed, manual transmission oil must be used.**

Install the inner and outer synchronizer rings and the cone to the gear, and measure dimension B shown in the illustration. If dimension B is smaller than the limit, replace the parts as a unit.

**Limit: 0.3 mm (.012 in.)**

# COUNTERSHAFT

22200730012

## DISASSEMBLY AND REASSEMBLY

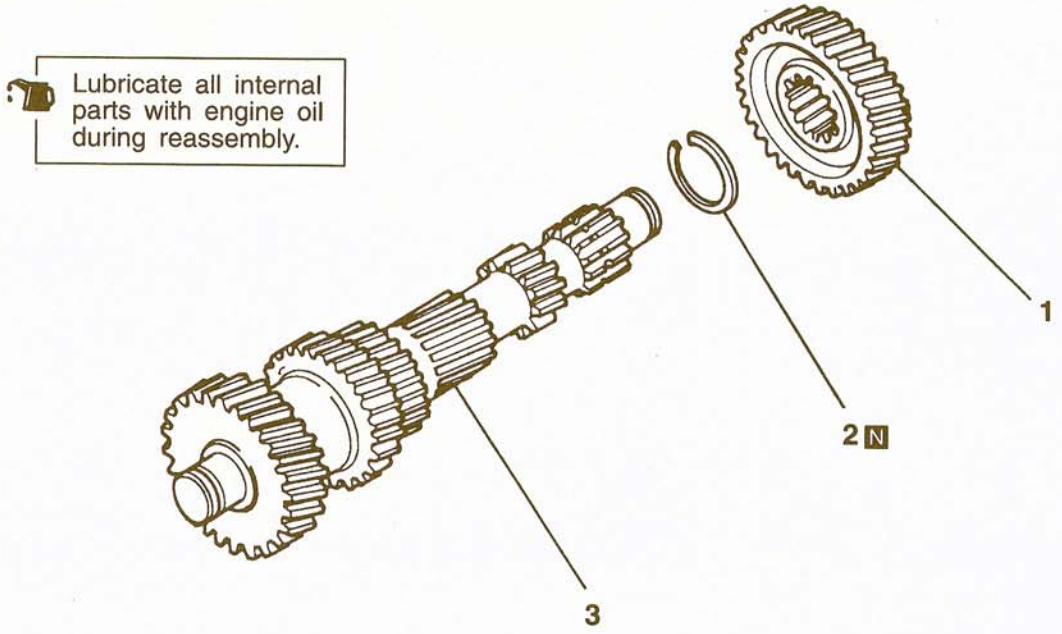


**Disassembly steps**

1. Overdrive gear
▶A◀ 2. Snap ring
3. Countershaft gear

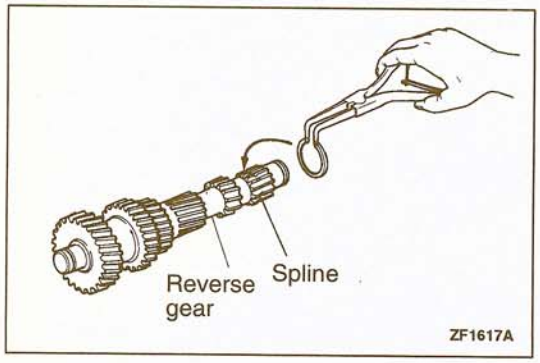


## REASSEMBLY SERVICE POINT

### ▶A◀ SNAP RING INSTALLATION

Do not fit the snap ring in its groove. Fit it on the bearing, beforehand, between the countershaft reverse gear and the spline.

NOTE
Install the countershaft in the transmission case before putting the snap ring in its groove.

# GEAR SHIFT CASE

22200850015

## DISASSEMBLY AND REASSEMBLY

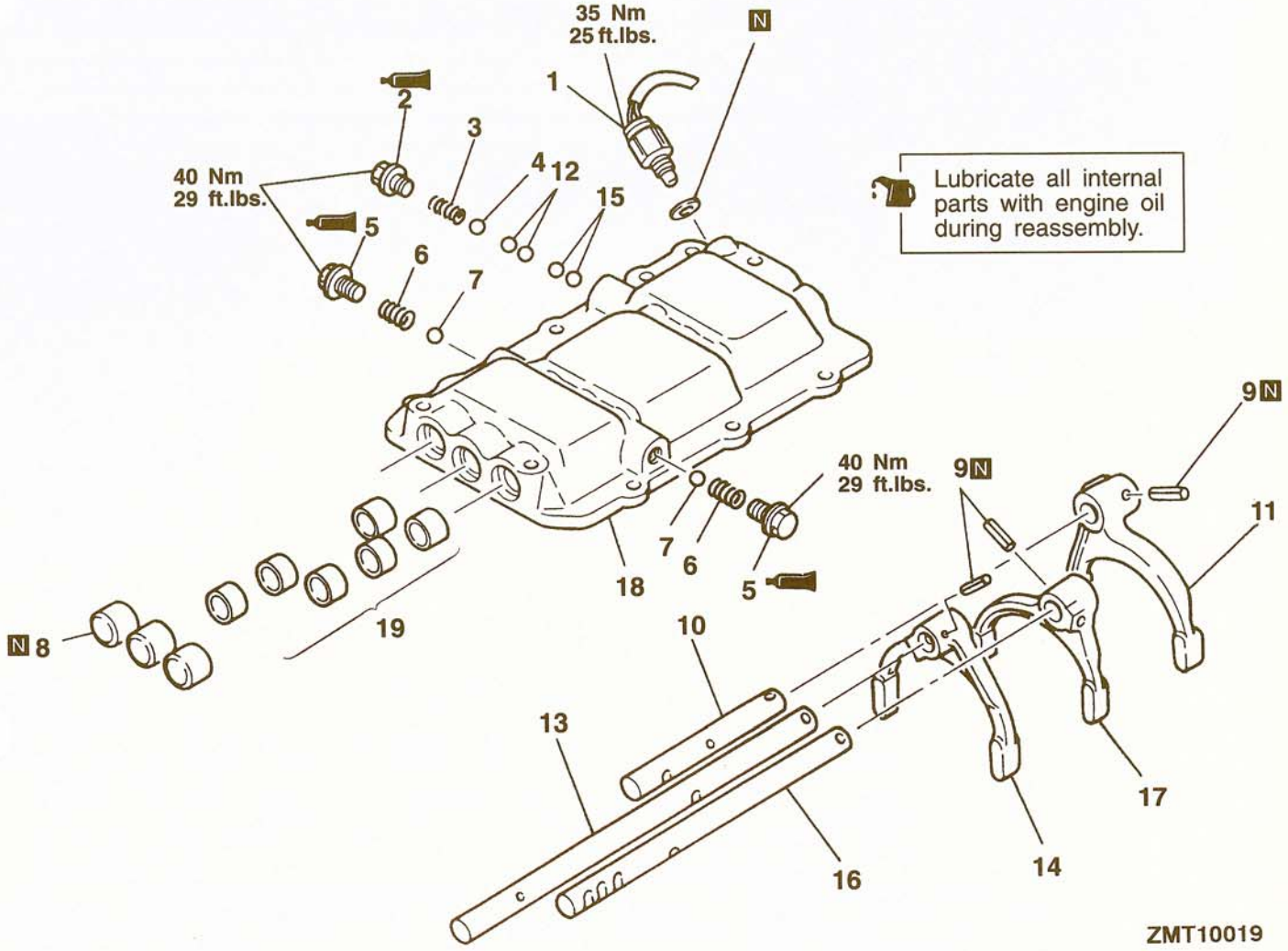


**Disassembly steps**

1. Backup light switch
▶E◀ 2. Screw plug
▶D◀ 3. Poppet spring
4. Steel ball
▶E◀ 5. Screw plug
▶D◀ 6. Poppet spring
7. Steel ball
8. Plug
▶C◀ 9. Spring pin
10. Fifth-reverse shift rail
11. Gear shift fork
▶B◀ 12. Steel ball
13. Third-fourth shift rail
14. Gear shift fork
▶B◀ 15. Steel ball
16. First-second shift rail
17. Gear shift fork
18. Gear shift case
▶A◀ 19. Teflon bushing

TSB Revision

## REASSEMBLY SERVICE POINTS

### ▶A◀ TEFLON BUSHING INSTALLATION

(1) Before reassembly, check the Teflon bushing in the shi rail.
(2) Replace the Teflon bushing if it is damaged or cracked. Teflon bushing can be pushed into position by a finger. Install the bushings at illustrated positions. Do not remove the bushing except when it is defective.

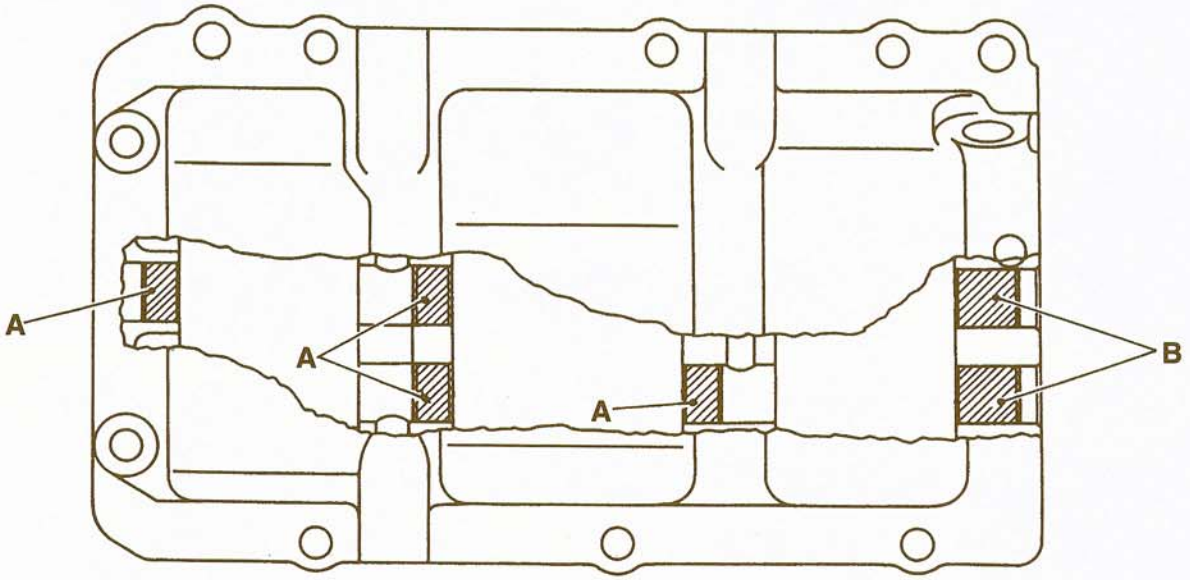


A: 12 mm long teflon bushing
B: 20 mm long teflon bushing

ZF1731A

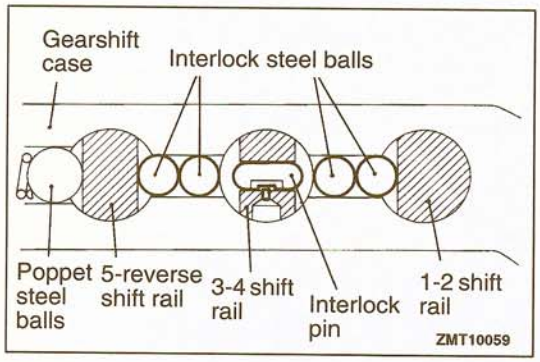


### ▶B◀ STEEL BALLS INSTALLATION

(1) Install the interlock steel balls, two at a time, in holes between the shift rails.
(2) Make sure that the interlock pin installed in the 3-4 shift rail moves smoothly.

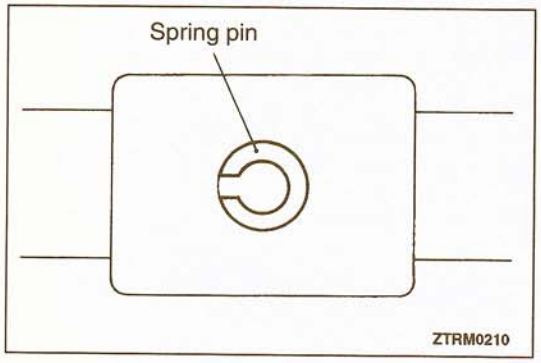


### ▶C◀ SPRING PINS INSTALLATION

TSB Revision

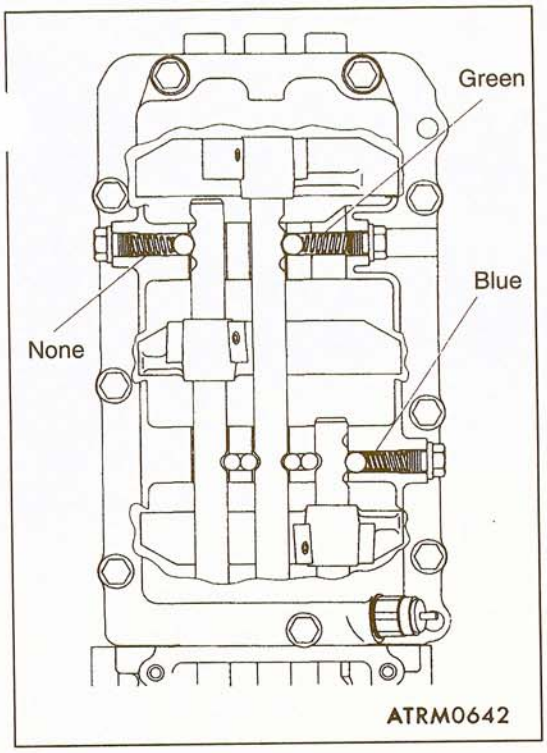


### ▶D◀ POPPET SPRINGS INSTALLATION

(1) The sections using the poppet springs can be determined with the identification colors. The length and spring constants of the poppet springs differ according to the usage sections, so take care not to mistaken them when installing.

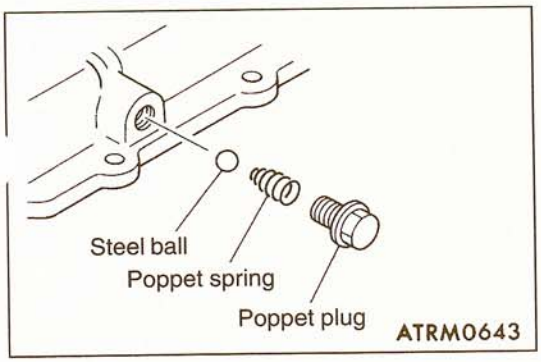


(2) When using tapered poppet springs, install so that the thin edge faces the steel ball side.

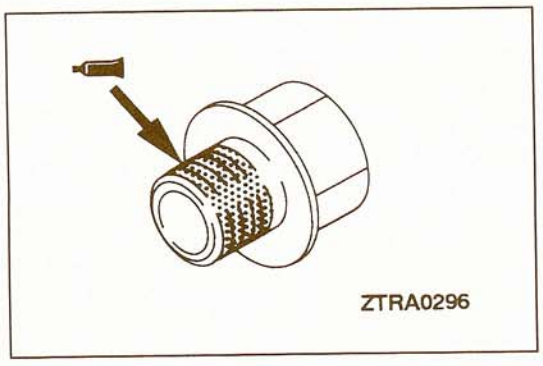


### ▶E◀ SCREW PLUGS INSTALLATION

Apply specified sealant to the screw plug.

**Specified sealant:**
**3M STUD Locking No. 4170 or equivalent**

# TRANSFER

22200880021

## DISASSEMBLY AND REASSEMBLY

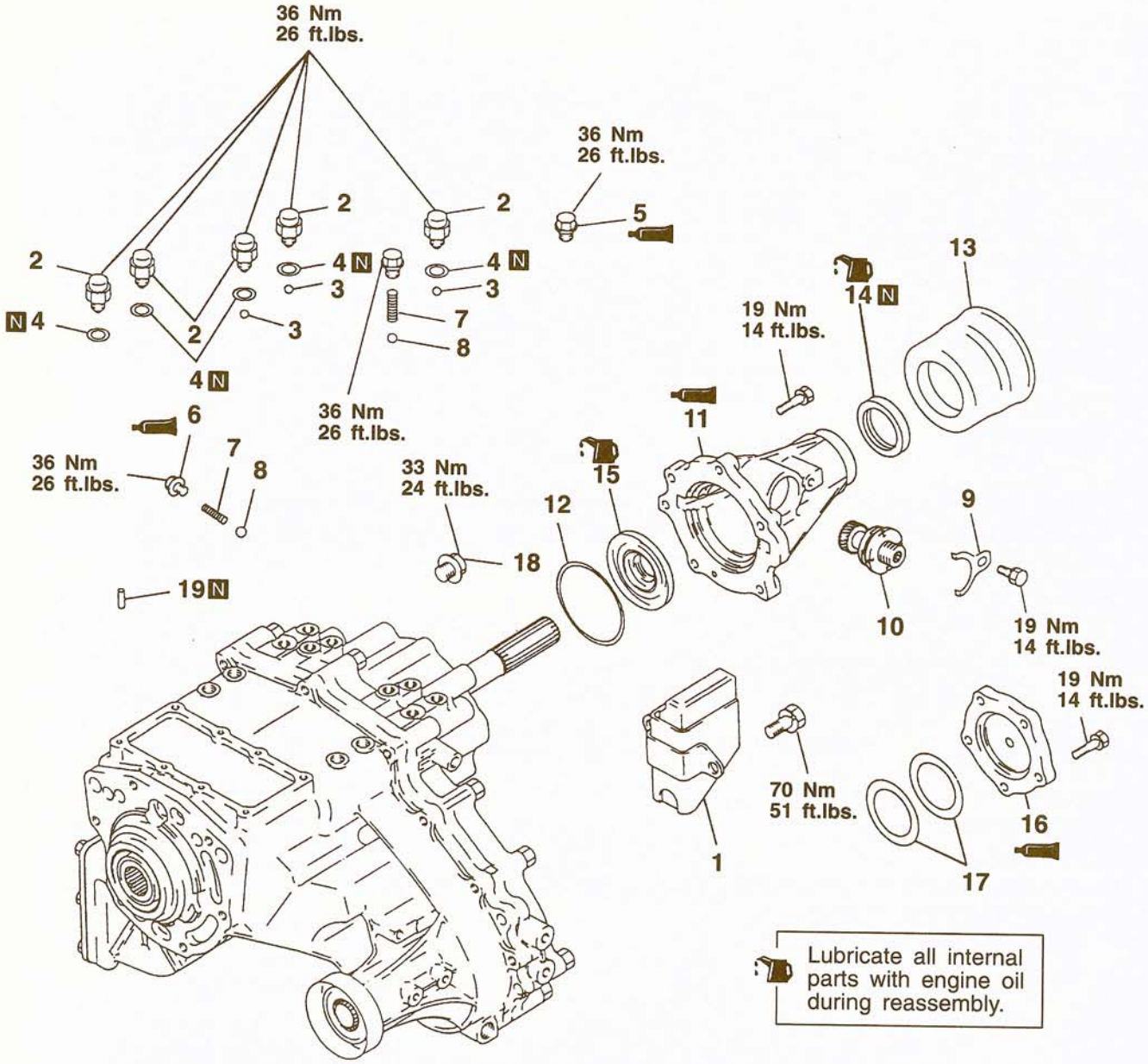


ATRM0780

**Disassembly steps**

1. Dynamic damper
▶U◀ 2. Detection switch
3. Steel ball
4. Gasket
▶T◀ 5. Plug
▶S◀ 6. Poppet plug
7. Poppet spring
8. Steel ball
9. Sleeve clamp
▶R◀ 10. Speedometer gear
▶Q◀ 11. Rear cover
▶P◀ 12. Spacer
13. Dust seal guard
▶O◀ 14. Oil seal
▶N◀ 15. Oil seal
▶M◀ 18. Cover
▶M◀ 19. Wave spring (Spacer)
20. H-L shift rail plug
▶L◀ 21. Spring pin for H-L shift fork

TSB Revision

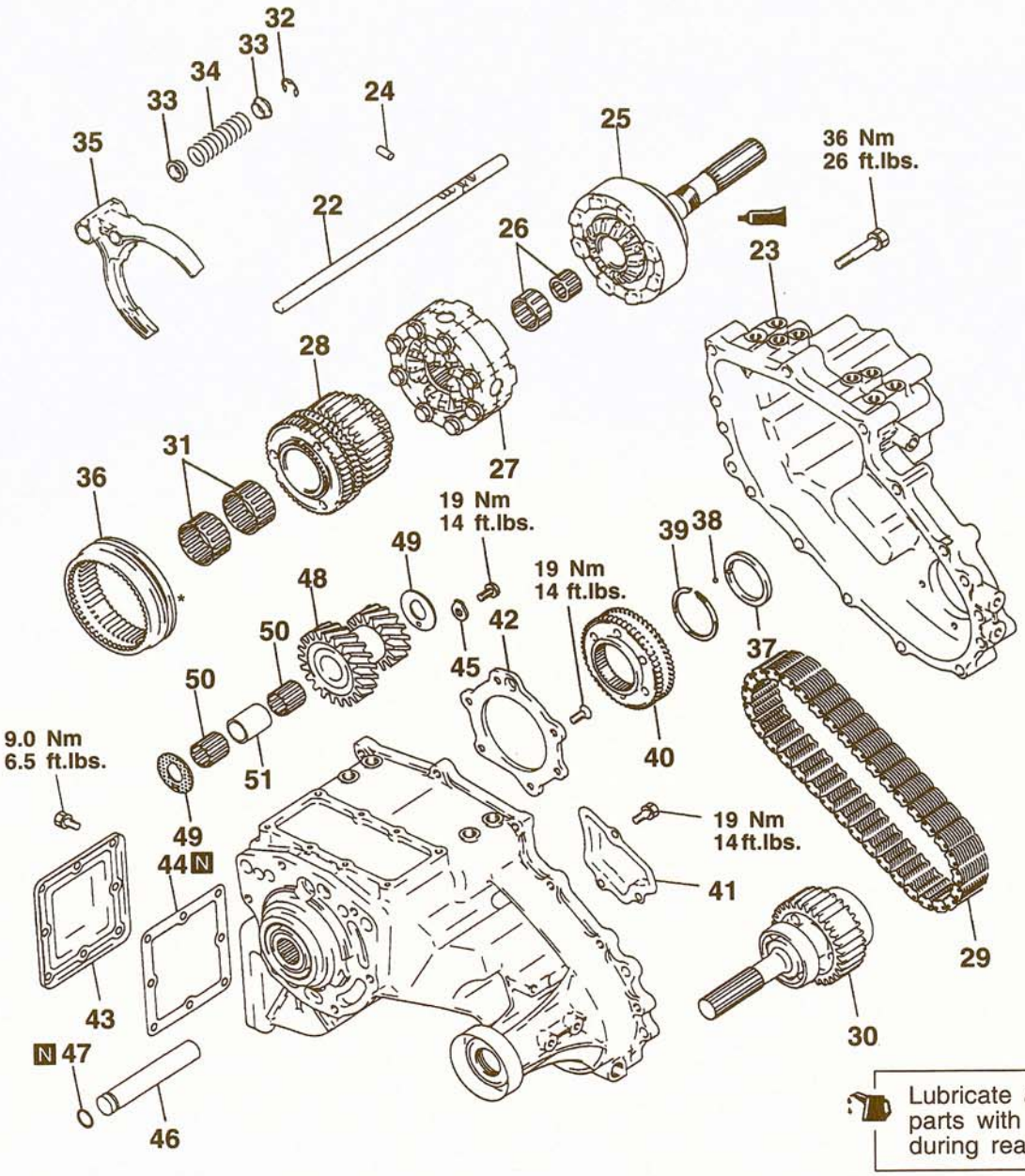


ATRM0781

**Disassembly steps**

◀A▶ ▶L◀ 22. H-L shift rail
◀A▶ ▶K◀ 23. Chain cover
▶K◀ 24. Interlock plunger
25. Rear output shaft assembly
26. Needle bearing
27. Center differential case assembly
◀D▶ ▶J◀ 28. 2-4WD synchronizer assembly
◀D▶ ▶J◀ 29. Chain
◀D▶ ▶J◀ 30. Front output shaft assembly
31. Needle bearing
32. Snap ring for 2-4WD shift rail
33. Spring seat
34. Spring
35. 2-4WD shift fork
36. 2-4WD synchronizer sleeve
37. Sleeve
38. Steel ball
▶I◀ 39. Snap ring
40. Differential lock hub
41. Oil dum cover
▶H◀ 42. Bearing retainer
43. Side cover
44. Side cover gasket
45. Lock plate
◀B▶ ▶G◀ 46. Transfer counter gear shaft
47. O-ring
48. Transfer counter gear
▶F◀ 49. Thrust washer
50. Needle bearing
51. Bearing spacer

**TSB Revision**

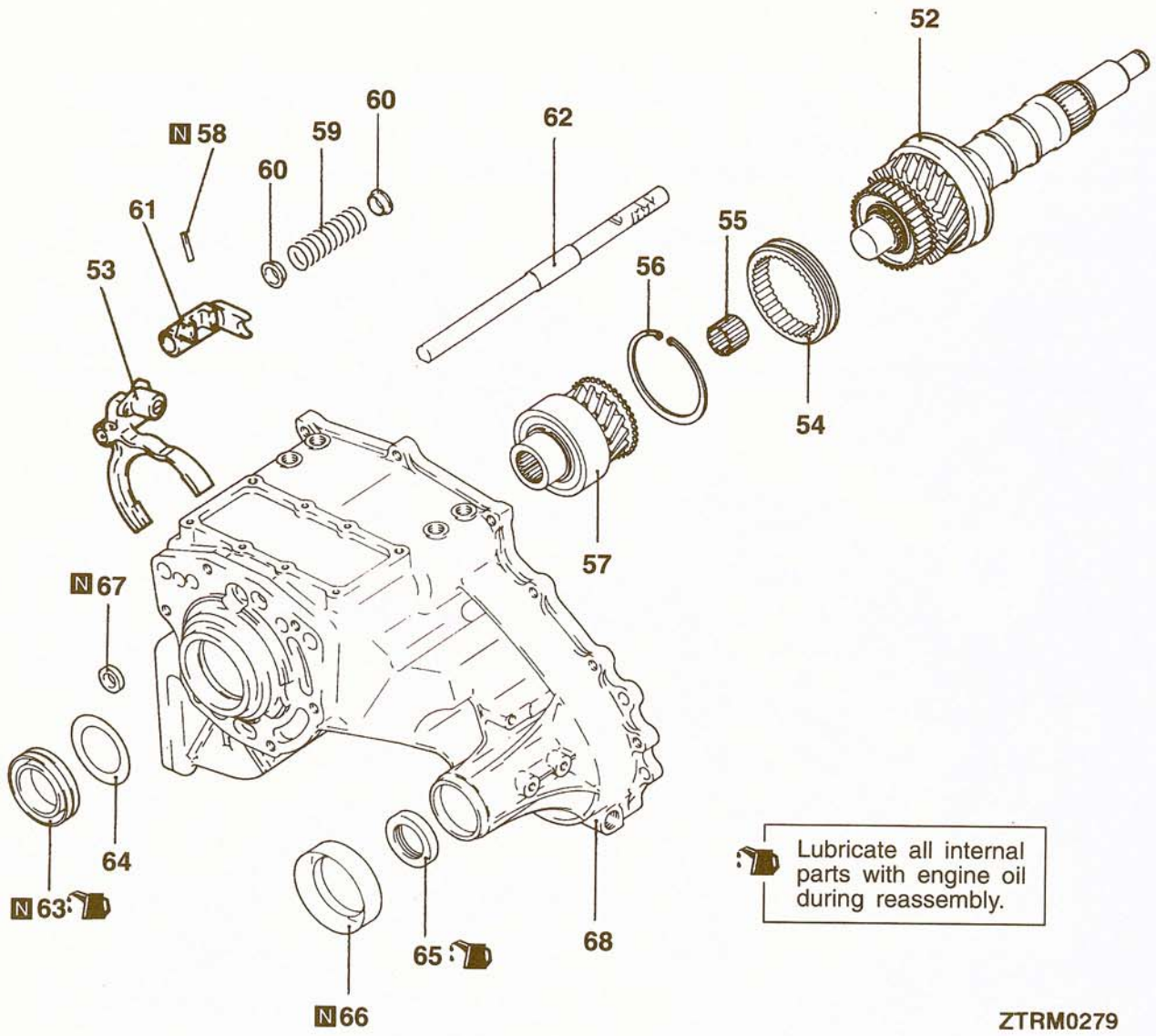


**Disassembly steps**

52. Transfer drive shaft assembly
53. H-L shift fork assembly
54. H-L clutch sleeve
55. Needle bearing
▶D◀ 56. Snap ring
57. Transfer input gear assembly
◀C▶ ▶E◀ 58. Spring pin for 2-4WD shift lug
▶E◀ 59. Spring
▶E◀ 60. Spring retainer
▶E◀ 61. 2-4WD shift lug
▶E◀ 62. 2-4WD shift rail
▶B◀ 63. Oil seal
64. Baffle plate
65. Dust seal guard
▶A◀ 66. Oil seal
▶C◀ 67. Oil seal
68. Transfer case

TSB Revision

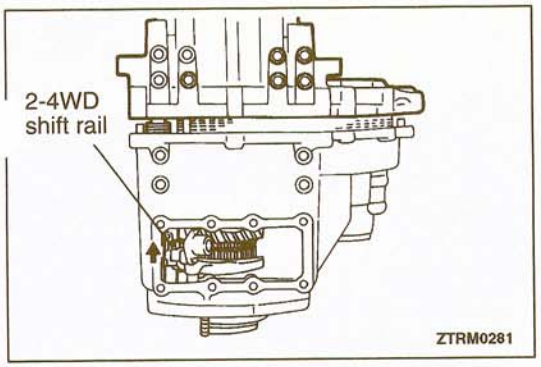


## DISASSEMBLY SERVICE POINTS

### ◀A▶ H-L SHIFT RAIL / CHAIN COVER REMOVAL

(1) Use a poppet spring to fix the H-L shift rail at the High side.
(2) Shift the 2-4WD shift rail to the 4WD position.

NOTE
If the 2-4WD shift rail is left in the 2WD position, the interlock will actuate, preventing removal of the chain cover.

(3) Remove the chain cover, and then remove the H-L shift rail.

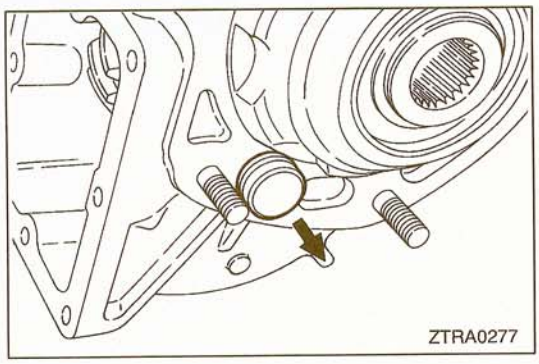


### ◀B▶ COUNTER GEAR SHAFT REMOVAL

The counter gear shaft should be pulled out forward the transmission case side.

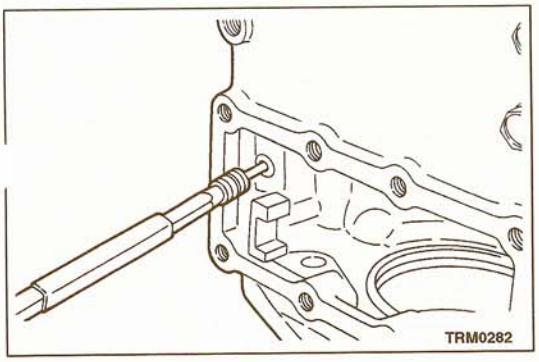


### ◀C▶ SPRING PIN REMOVAL

Use a pin punch or similar tool to tap out the spring pin.

**Caution**
**Remove the pin with care, as there is a danger that the spring may fly out.**

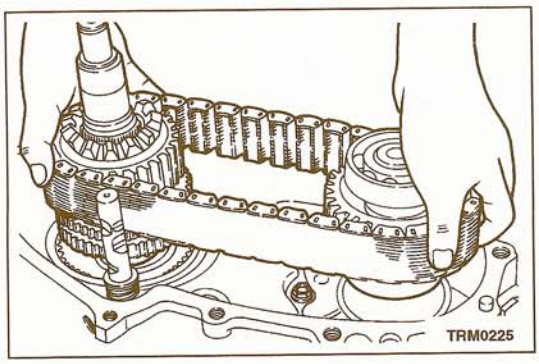


### ◀D▶ 2-4WD SYNCHRONIZER ASSEMBLY / CHAIN / FRONT OUTPUT SHAFT ASSEMBLY REMOVAL

Remove the 2-4WD synchronizer assembly, chain and front output shaft from the transmission as a unit.

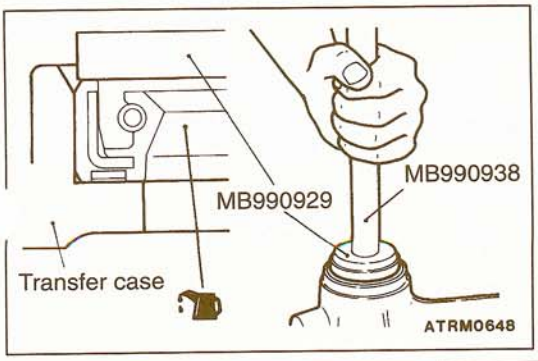


## REASSEMBLY SERVICE POINTS

### ▶A◀ OIL SEAL (FRONT OUTPUT SHAFT) INSTALLATION

Apply transmission oil to the lip of the oil seal and pressure insert it.

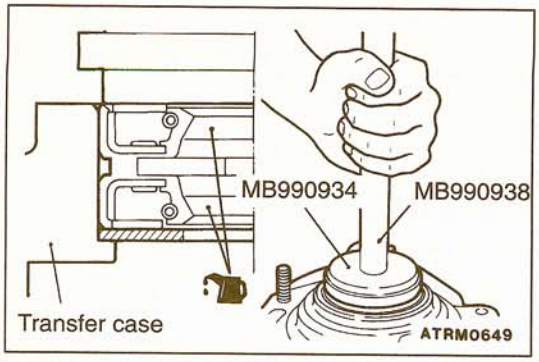


### ▶B◀ OIL SEAL (INPUT GEAR) INSTALLATION

Apply transmission oil to the lip of the oil seal and pressure insert it.

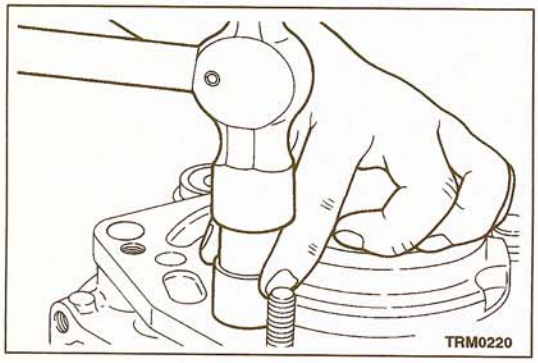


### ▶C◀ OIL SEAL INSTALLATION

Use a socket wrench or similar tool to install the oil seal.

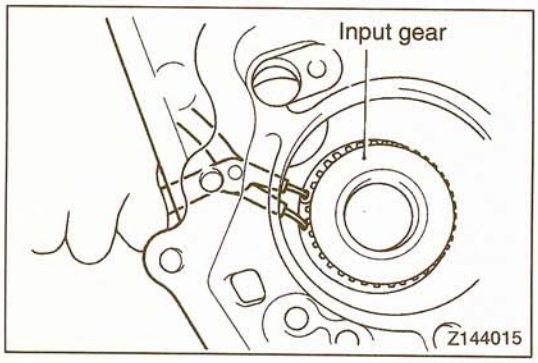


### ▶D◀ SNAP RING INSTALLATION

Select the thickest snap ring that will fit into the groove and install it.

**Standard value: 0–0.06 mm (0–.0024 in.)**

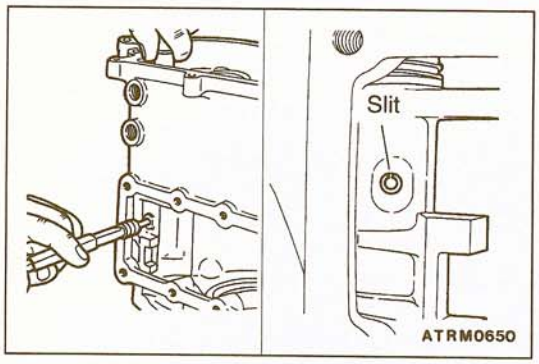


### ▶E◀ 2-4WD SHIFT RAIL / 2-4WD SHIFT LUG / SPRING RETAINER / SPRING / SPRING PIN INSTALLATION

(1) Install the spring retainer and spring to the shift rail, and set it to the shift lug inside the transfer case.
(2) Press the shift rail and align the shift lug and the spring pin hole of the shift rail, while being careful of the direction of the shift rail.
(3) While pressing the rail, tap in the spring pin so that the slit of the spring pin is facing the shaft centre of the shift rail.

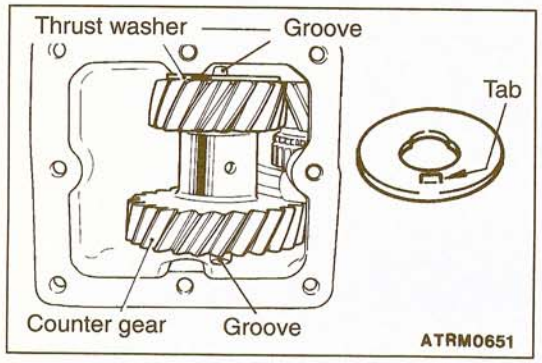


### ▶F◀ THRUST WASHER INSTALLATION

Install the thrust washer so that the tab fits into the groove of the transfer case.

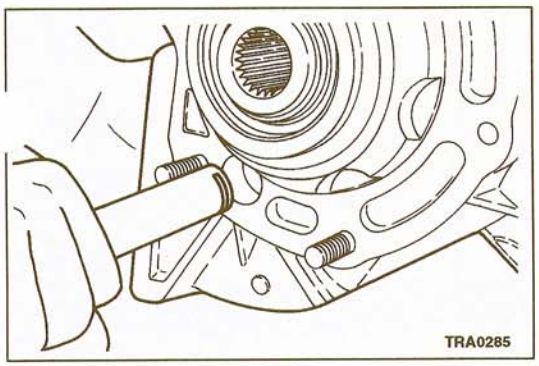


### ▶G◀ COUNTER GEAR SHAFT INSTALLATION

Insert the counter gear shaft from the transmission case side, being careful of the position of the lock plate groove.

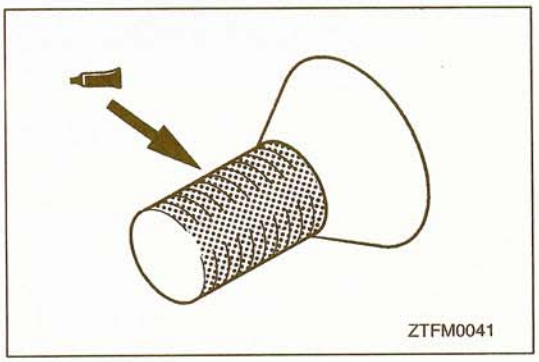


### ▶H◀ BEARING RETAINER INSTALLATION

A pre-coated bolt is used for the bearing retainer, so if it is being re-used, apply specified sealant to the thread section of the bearing retainer, and then install the bearing retainer.

**Specified adhesive:**
**3M STUD Locking No.4170 or equivalent**

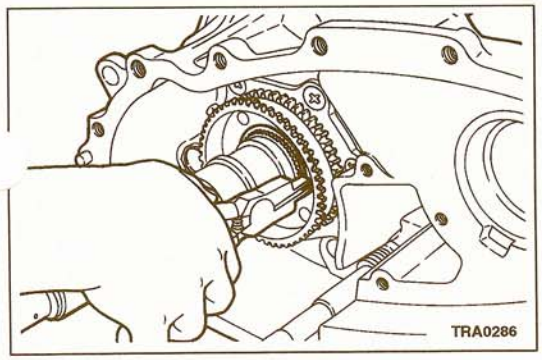


### ▶I◀ SNAP RING INSTALLATION

When installing the snap ring, select the one with the maximum thickness that can fit in the groove.

**Standard value:**
**0–0.08 mm (0–.0031 in.)**

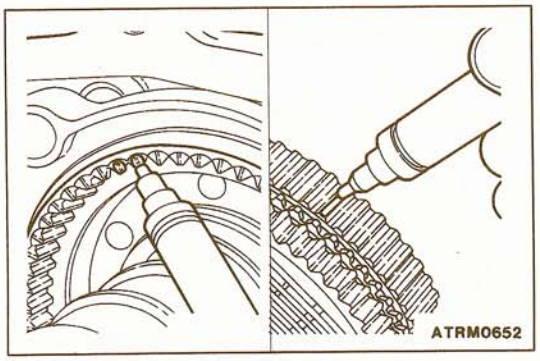


### ▶J◀ 2-4WD SYNCHRONIZER ASSEMBLY / CHAIN / FRONT OUTPUT SHAFT ASSEMBLY INSTALLATION

(1) Make a mark with white paint, etc., in the grooves of the 2-4WD synchronizer (3 places).
(2) Make a mark with white paint, etc., on the spline projections of the 2-4WD synchronizer sleeve (3 places).

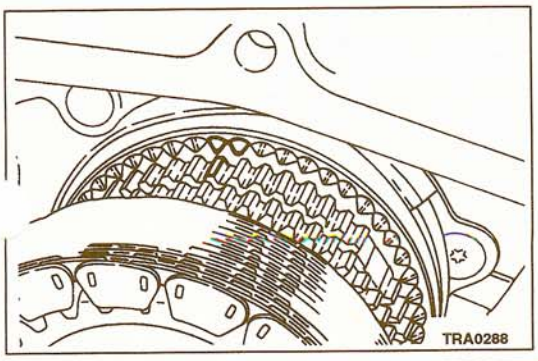


(3) Link the chain tightly onto the 2-4WD synchronizer and the front output shaft sprockets.
(4) Install both sprockets to the transfer case at the same time, while keeping them at the maximum distance apart.

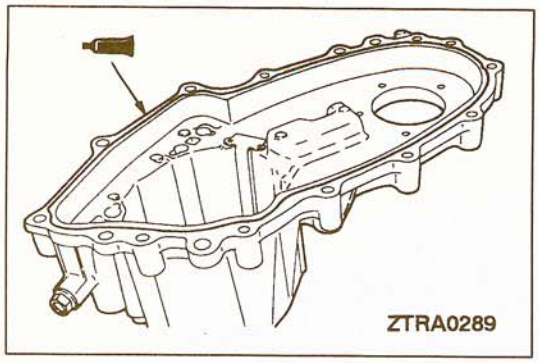


### ▶K◀ CHAIN COVER / INTERLOCK PLUNGER INSTALLATION

(1) Insert the interlock plunger in a position so that it does not interfere with the 2-4WD shift rail.
(2) Apply specified sealant to the chain cover, and then install the chain cover.

**Specified sealant:**
**3M ATD Part No. 8660 or equivalent**

**Caution**
**Apply the proper amount of sealant evenly.**

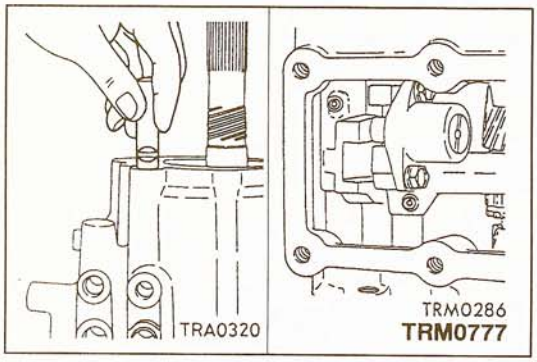


### ▶L◀ H-L SHIFT RAIL / SPRING PIN FOR H-L SHIFT FORK INSTALLATION

(1) Insert the H-L shift rail from the H-L shift rail hole, being careful of the direction of the shift rail.
(2) Align the spring pin holes on the shift rail and the shift fork, and tap in the spring pin so that the slit of the spring pin is facing the shaft centre of the shift rail.

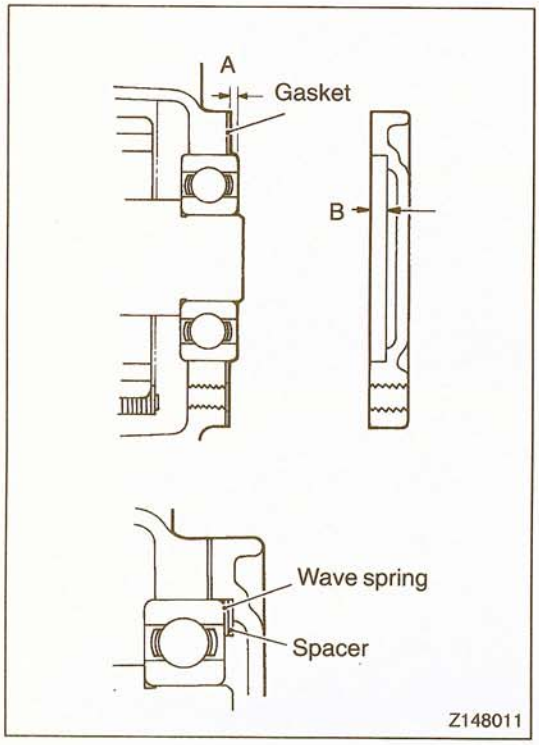


### ▶M◀ COVER / WAVE SPRING (SPACER) INSTALLATION

(1) Measure the amount of protrusion of the front output shaft rear bearing "A" and the amount of inset of the cover "B". If the value of "B" exceeds the value of "A" by 2 mm (.08 in.), add a spacer in between the wave spring and the cover. If the difference is less than 2 mm (.08 in.), the wave spring by itself is okay.
(2) Apply specified sealant to the cover and the thread section of the mounting bolt, and then install the cover.

**Specified sealant, adhesive:**
**3M ATD Part No. 8660 or equivalent: Cover**
**3M STUD Locking No. 4170 or equivalent: Bolt**

**Caution**
**Apply the proper amount of sealant evenly.**

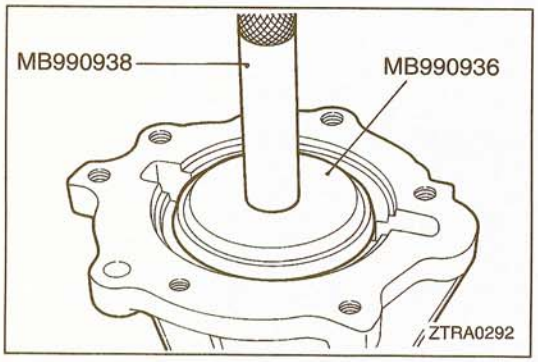


### ▶N◀ OIL SEAL INSTALLATION

TSB Revision

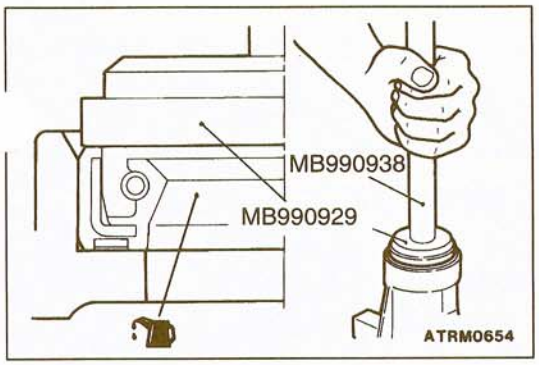


### ▶O◀OIL SEAL INSTALLATION

Apply transmission oil to the lip of the oil seal before press-fitting.

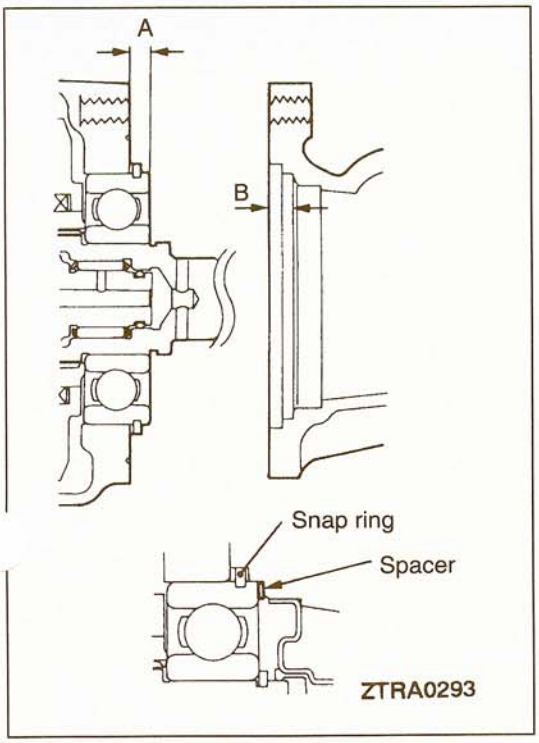


### ▶P◀SPACER INSTALLATION

Measure the amount of protrusion of the rear output shaft bearing "A" and the amount of inset of the two stages of the cover "B". Calculate the value "C" by subtracting "B" from "A", and then select a snap ring which adjusts the difference between the value of "C" and the thickness of the spacer to the standard value below.

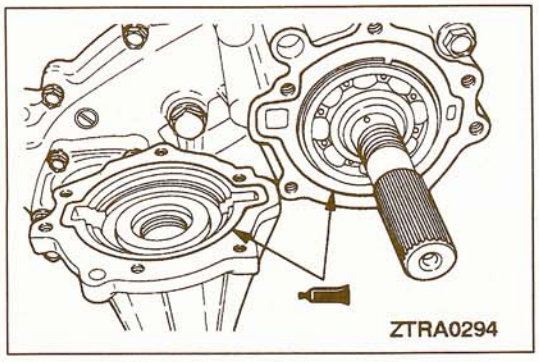


### ▶Q◀REAR COVER INSTALLATION

Apply specified sealant to the rear cover, and then install the cover.

**Specified sealant:**
**3M ATD Part No.8660 or equivalent**

**Caution**
**Apply the proper amount of sealant evenly.**

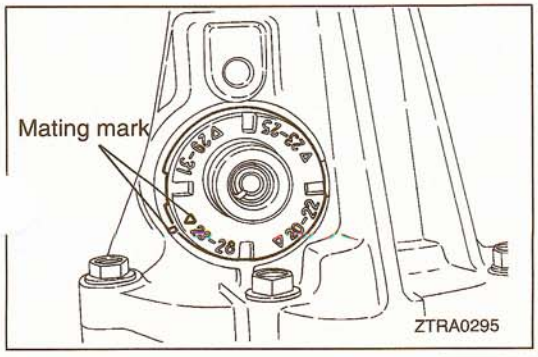


### ▶R◀SPEEDOMETER GEAR INSTALLATION

Match the mating marks to the number of teeth.

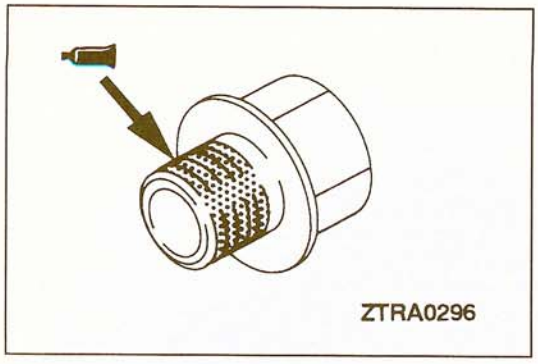


### ▶S◀ SEALANT APPLICATION TO POPPET PLUG

Apply specified sealant to the poppet plug, and then install the poppet plug.

**Specified sealant:**
**3M ATD Part No.8660 or equivalent**

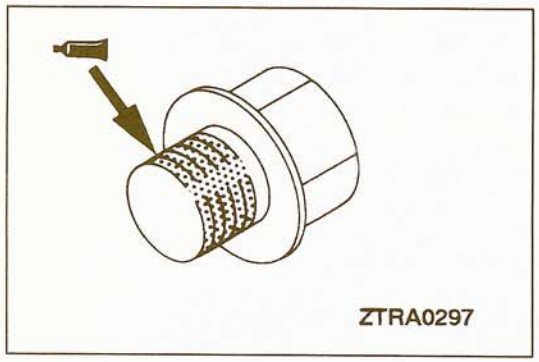


### ▶T◀ SEALANT APPLICATION TO PLUG

A pre-coated plug is used, so if it is being re-used, apply specified sealant to the thread section, and then install.

**Specified sealant:**
**3M ATD Part No.8660 or equivalent**

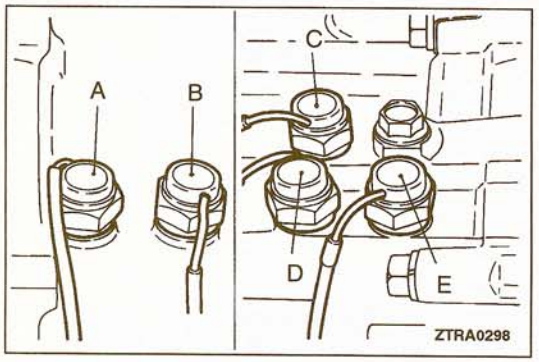


### ▶U◀ DETECTION SWITCH INSTALLATION

Be careful not to make a mistake when installing.

A: Ball built-in, brown connector
B: Ball built-in, black connector
C: Ball separate, brown connector
D: Ball separate, black connector
E: Ball separate, white connector

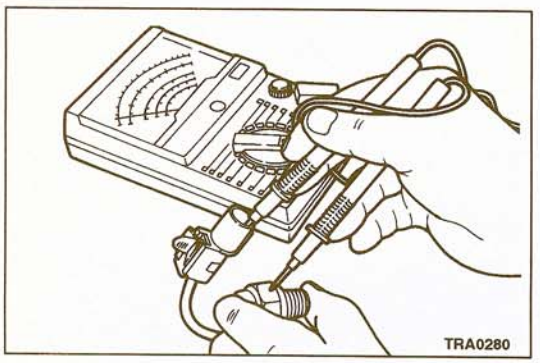


## INSPECTION

22200890017

### DETECTION SWITCH INSPECTION

Inspect the continuity between the connector terminal and the switch body.

| Switch condition | Continuity |
|---|---|
| Switch end pressed | No continuity |
| Switch end released | Continuity |

# H-L SHIFT FORK

22200970018

## DISASSEMBLY AND REASSEMBLY

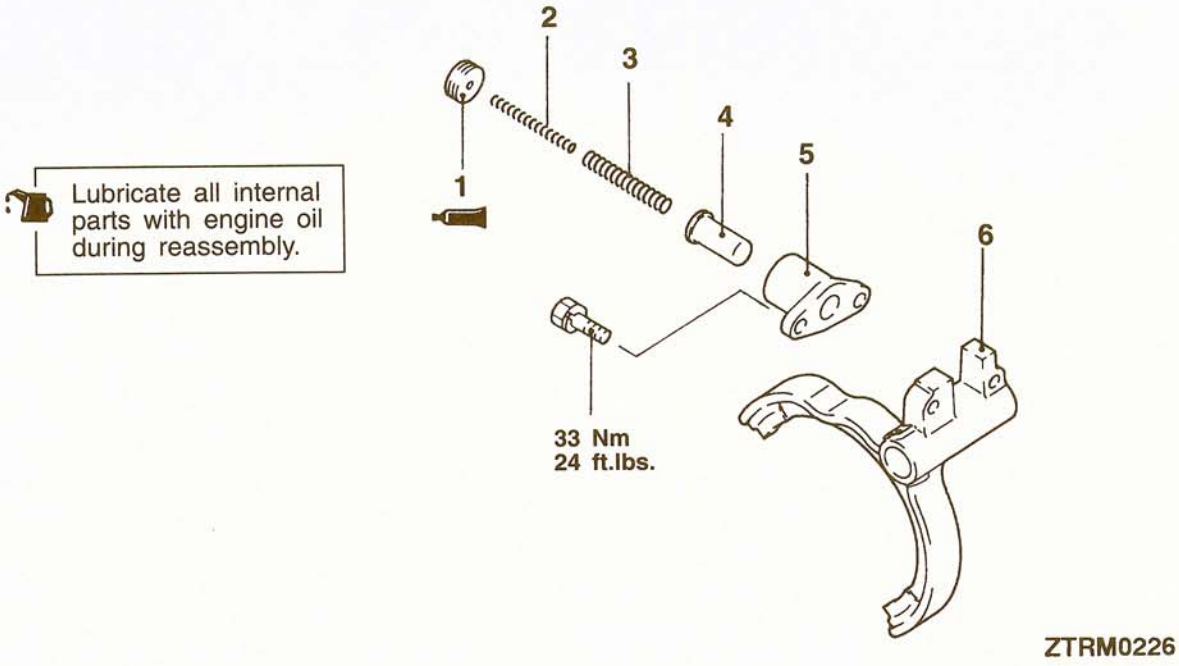


**Disassembly steps**

▶A◀ 1. Return spring plug
2. Return spring
3. Return spring
4. Select plunger
5. Plunger boss
6. H-L shift fork

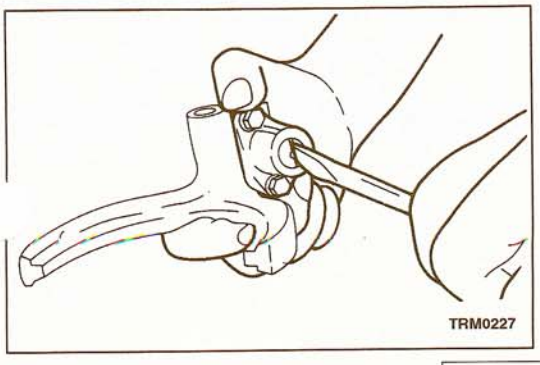


## REASSEMBLY SERVICE POINT

### ▶A◀ RETURN SPRING PLUG INSTALLATION

Apply specified sealant to the return spring plug, and screw in the plug until it is flush with the end of the plunger boss.

**Specified sealant:**
**3M Super Weatherstrip No.8001 or equivalent**

**TSB Revision**

# FRONT OUTPUT SHAFT

22201150046

## DISASSEMBLY AND REASSEMBLY

Lubricate all internal parts with engine oil during reassembly.

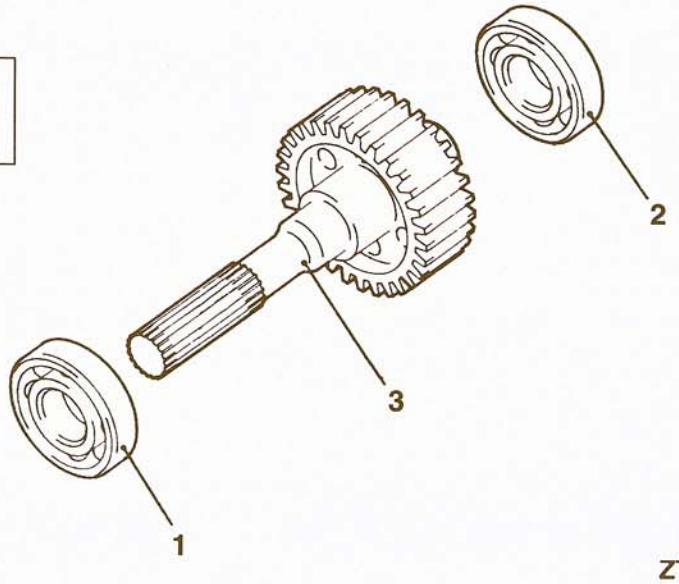


ZTRA0319

**Disassembly steps**

◀A▶ ▶A◀ 1. Ball bearing
◀A▶ ▶A◀ 2. Ball bearing
3. Front output shaft

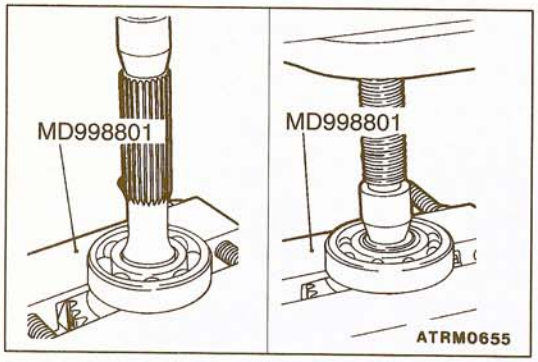


### DISASSEMBLY SERVICE POINT

◀A▶ BALL BEARING REMOVAL

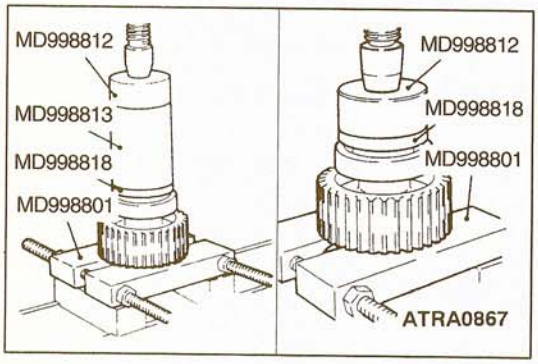


### REASSEMBLY SERVICE POINT

▶A◀ BALL BEARING INSTALLATION

TSB Revision

# REAR OUTPUT SHAFT

22201030012

## DISASSEMBLY AND REASSEMBLY

Lubricate all internal parts with engine oil during reassembly.

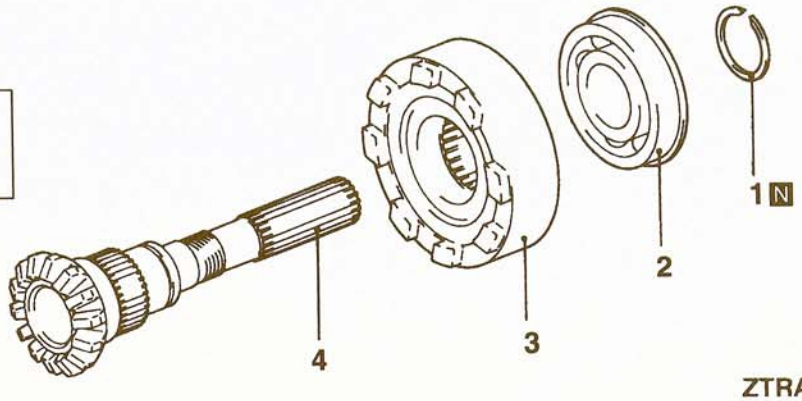


ZTRA0301

**Disassembly steps**

◀A▶ ▶B◀ ▶A◀
1. Snap ring
2. Ball bearing
3. Viscous coupling
4. Rear output shaft

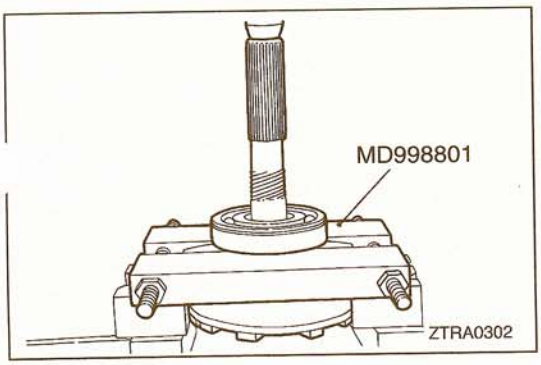


### DISASSEMBLY SERVICE POINT

**◀A▶ BALL BEARING REMOVAL**

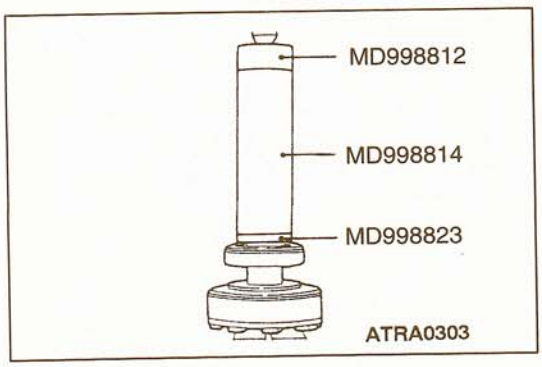


### REASSEMBLY SERVICE POINTS

**▶A◀ BALL BEARING INSTALLATION**

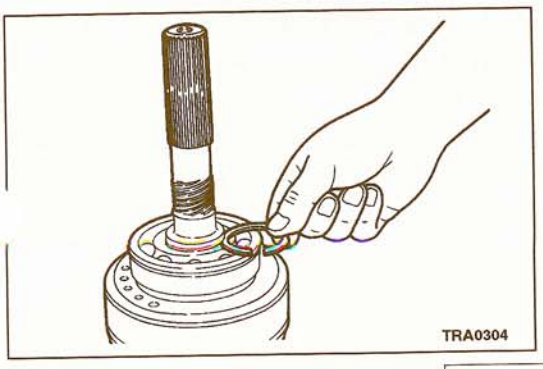


**▶B◀ SNAP RING INSTALLATION**

When installing the snap ring, select the one with the maximum thickness that can fit in the groove.

**Standard value: 0–0.08 mm (0–.0031 in.)**

TSB Revision

# CENTER DIFFERENTIAL CASE

22201060011

## DISASSEMBLY AND REASSEMBLY

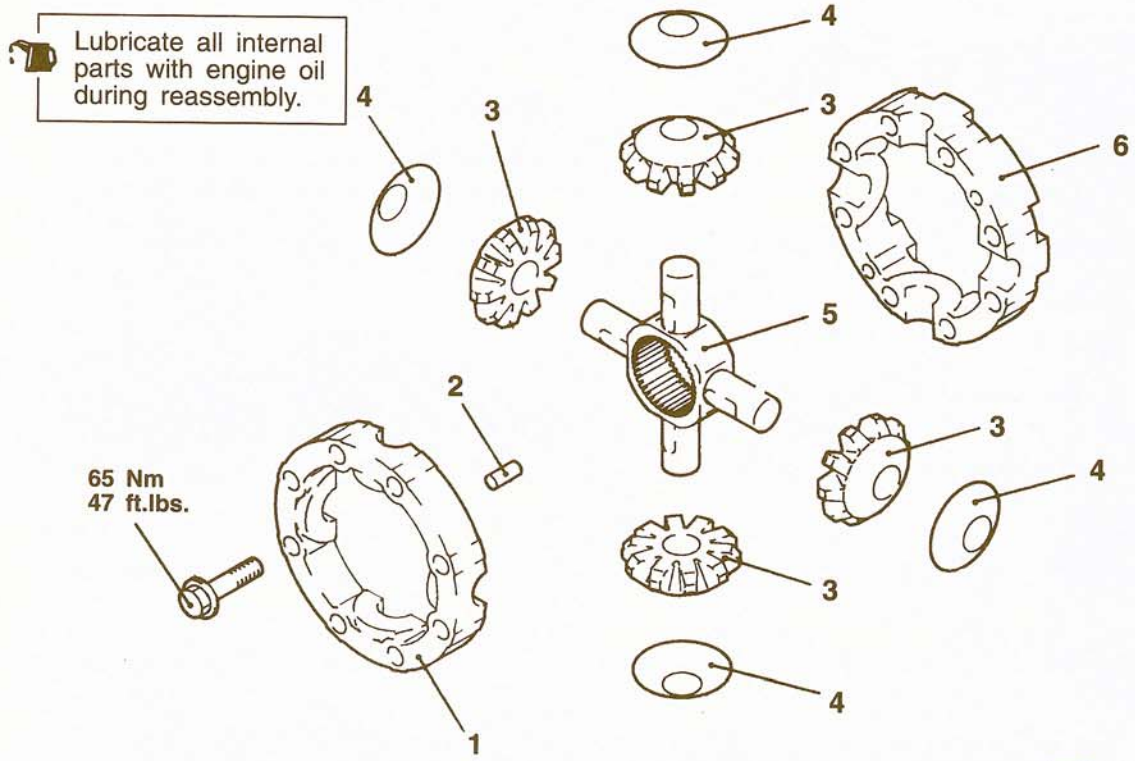


**Disassembly steps**

▶A◀ 1. Center differential case front
2. Dowel pin
3. Pinion
4. Thrust washer
5. Pinion shaft
6. Center differential case rear

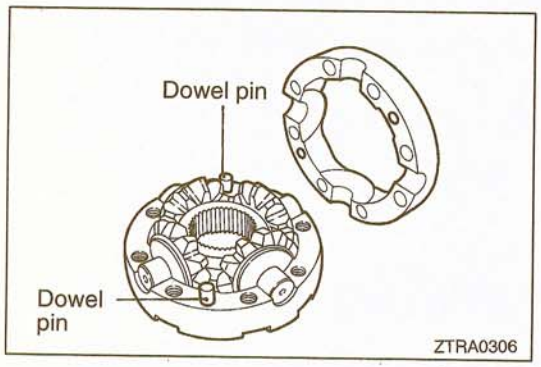


## REASSEMBLY SERVICE POINT

### ▶A◀ CENTER DIFFERENTIAL CASE FRONT INSTALLATION

Install so that the mating marks on the outside are aligned, being careful of the position of the dowel pin.

TSB Revision

# 2-4WD SYNCHRONIZER

22201090010

## DISASSEMBLY AND REASSEMBLY

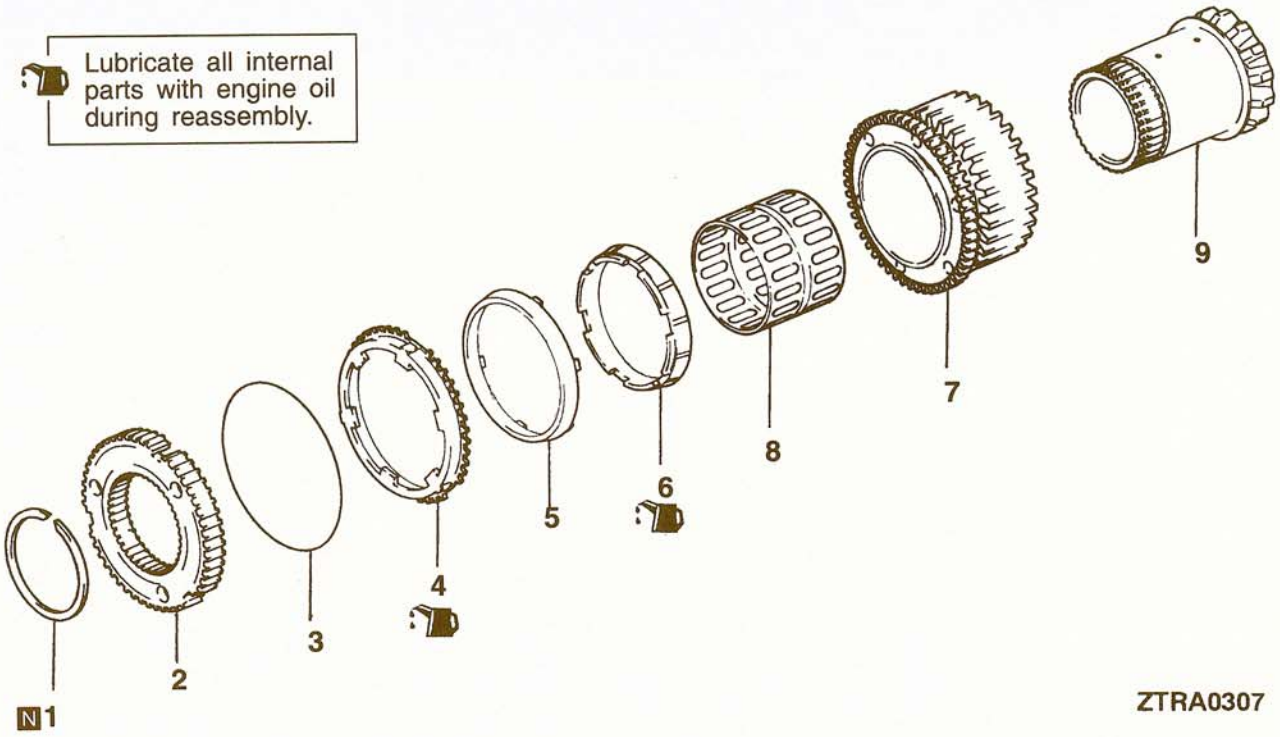


**Disassembly steps**

- ▶C◀ 1. Snap ring
- 2. 2-4WD synchronizer hub
- 3. Synchronizer spring
- ▶B◀ 4. Outer synchronizer ring
- 5. Synchronizer cone
- ▶A◀ 6. Inner synchronizer ring
- 7. Drive sprocket
- 8. Needle bearing
- 9. Front drive pinion

TSB Revision

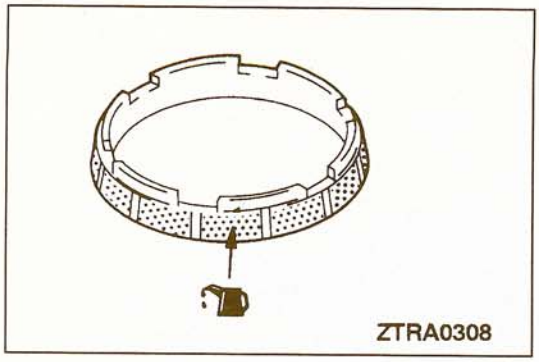
ZTRA0308

## REASSEMBLY SERVICE POINTS

### ▶A◀ INNER SYNCHRONIZER RING INSTALLATION

After applying transmission oil to the surface of the synchroni er ring cone, install the cone.

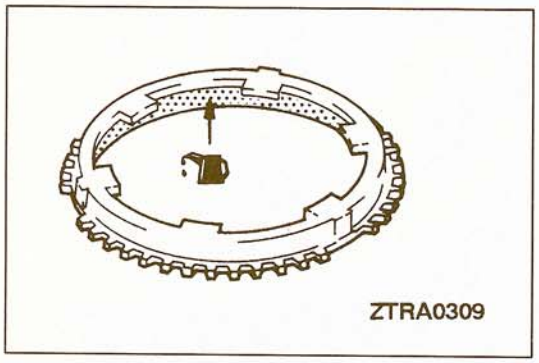
ZTRA0309

### ▶B◀ OUTER SYNCHRONIZER RING INSTALLATION

After applying transmission oil to the surface of the synchronizer ring cone, install the cone.

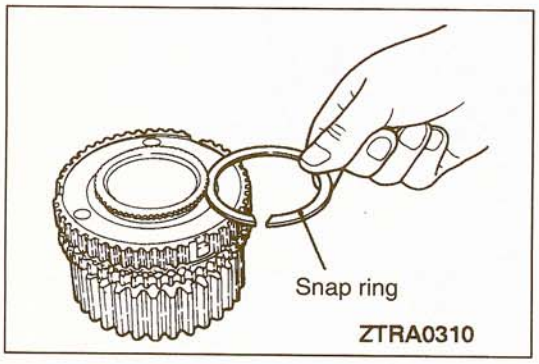

ZTRA0310

### ▶C◀ SNAP RING INSTALLATION

When installing the snap ring, select the one with the maximum thickness that can fit in the groove.

**Standard value: 0–0.08 mm (0–.0031 in.)**

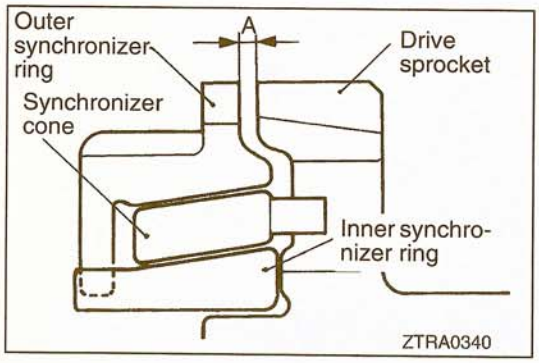

ZTRA0340

## INSPECTION

22201100010

### SYNCHRONIZER RING / SYNCHRONIZER CONE

Install the inner and outer synchronizer rings and the cone to the drive sprocket, and measure dimension A shown in the illustration. If dimension A is smaller than the limit, replace the part as a unit.

**Limit: 0.3 mm (.012 in.)**

NOTE
The scratches on the surface of the cone showing the direction of rotation are caused by the liner of the synchronizer ring. Therefore, if the above clearance is sufficient, it is not necessary to replace the parts.

# TRANSFER DRIVE SHAFT

22201120016

## DISASSEMBLY AND REASSEMBLY

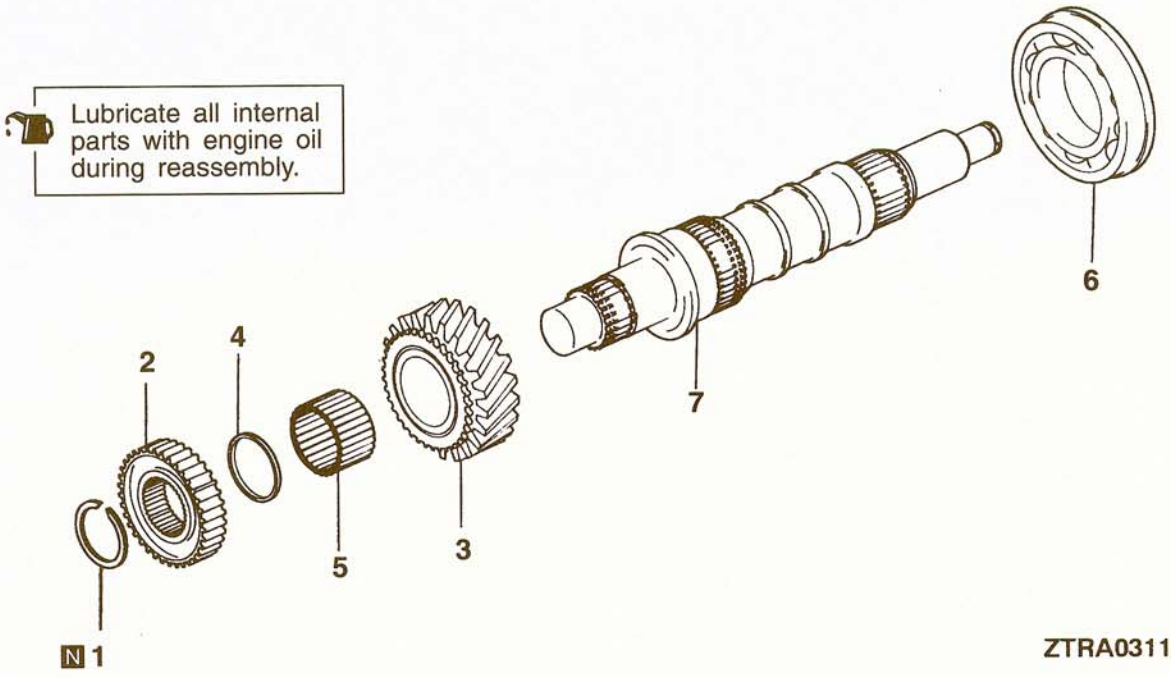


**Disassembly steps**

▶B◀ 1. Snap ring
2. H-L clutch hub
3. Low speed gear
4. Bearing spacer
5. Needle bearing
◀A▶ ▶A◀ 6. Ball bearing
7. Transfer drive shaft

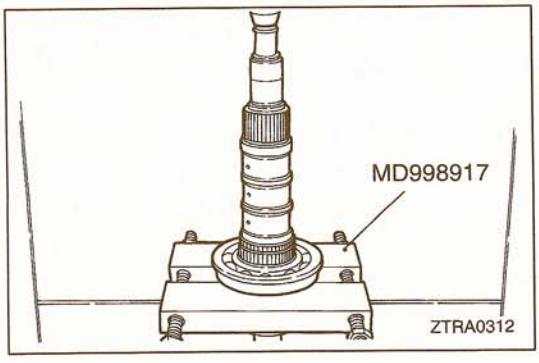


### DISASSEMBLY SERVICE POINT

◀A▶ BALL BEARING REMOVAL

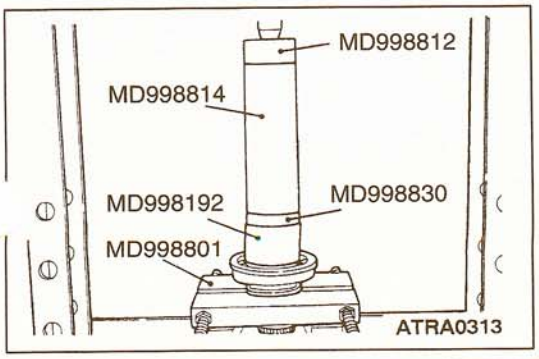


### REASSEMBLY SERVICE POINT

▶A◀ BALL BEARING INSTALLATION

TSB Revision

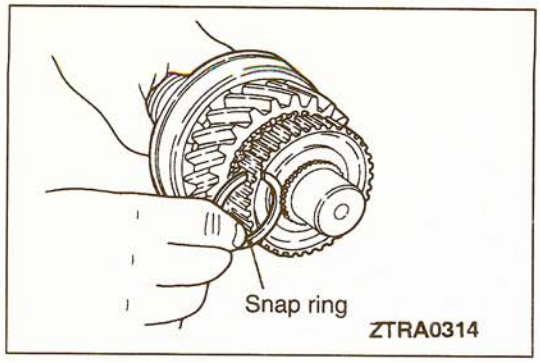


**▶B◀ SNAP RING INSTALLATION**

When installing the snap ring, select the one with the maximum thickness that can fit in the groove.

**Standard value: 0–0.08 mm (0–.0031 in.)**

# AUTOMATIC TRANSMISSION

## CONTENTS

23109000095

AUTOMATIC TRANSMISSION ..... 23A

AUTOMATIC TRANSMISSION OVERHAUL <V4AW2> ..... 23B

AUTOMATIC TRANSMISSION OVERHAUL <V4AW3> ..... 23C

NOTES

# AUTOMATIC TRANSMISSION

## CONTENTS

23109000101


**GENERAL INFORMATION ..... 2**

**LUBRICANTS ..... 3**

**ON-VEHICLE SERVICE ..... 41**

- Automatic Transmission Fluid Check ..... 41
- Automatic Transmission Fluid Replacement ... 41
- Automatic Transmission Fluid Temperature Switch Check ..... 48
- Center Differential Lock Detection Switch Check ..... 42
- Center Differential Lock Operation Detection Switch Check ..... 43
- Converter Stall Test ..... 53
- E.L.C. 4th Gear Automatic Transmission Control Component Layout <V4AW3> ..... 49
- 4WD Indicator Control Unit Check ..... 48
- 4WD Operation Detection Switch Check ..... 43
- High range/Low range Detection Switch Check ..... 43
- Hydraulic Circuit <V4AW2> ..... 58
- Hydraulic Circuit <V4AW3> ..... 70
- Hydraulic Pressure Test ..... 55
- Key Interlock Mechanism Check ..... 46
- Park/Neutral Position Switch and Control Cable Adjustment ..... 44
- Park/Neutral Position Switch Check ..... 43
- Selector Lever Operation Check ..... 45
- Shift Lock Mechanism Check ..... 47
- Throttle Cable Check and Adjustment ..... 41
- Throttle Cable Stopper Adjustment ..... 42
- Transfer Oil Check ..... 41
- Transfer Oil Replacement ..... 41
- Transfer Oil Seal Replacement ..... 47
- 2WD/4WD Detection Switch Check ..... 42
- V4AW3 Control Component Check ..... 51

**SEALANTS AND ADHESIVES ..... 4**

**SELECTOR LEVER ASSEMBLY ..... 82**

**SERVICE SPECIFICATIONS ..... 3**

**SPECIAL TOOLS ..... 4**

**TRANSMISSION AND TRANSFER ASSEMBLY ..... 87**

**TRANSMISSION CONTROL ..... 78**

**TRANSMISSION FLUID COOLER, HOSES AND PIPES ..... 85**

**TROUBLESHOOTING <V4AW2> ..... 5**

**TROUBLESHOOTING <V4AW3> ..... 10**

# GENERAL INFORMATION

23100010080

The automatic transmissions come in two models, namely, V4AW2 and V4AW3.

| Items | | Specifications | |
|---|---|---|---|
| Model | | V4AW2 | V4AW3 |
| Torque converter type | | With torque converter clutch | With torque converter clutch |
| Transmission type | | 4-speed full automatic | Electronically controlled 4-speed full automatic |
| Control elements | Clutch | Multiple disc type 3 sets | Multiple disc type 3 sets |
| | Brake | Multiple disc type 4 sets | Multiple disc type 3 sets |
| | One-way clutch | Sprag type 3 sets | Sprag type 3 sets |
| Gear ratio | 1st gear | 2.826 | 2.804 |
| | 2nd gear | 1.493 | 1.531 |
| | 3rd gear | 1.000 | 1.000 |
| | 4th gear | 0.730 | 0.754 |
| | Reverse | 2.703 | 2.393 |
| Oil pump type | | Gear type | Gear type |
| Oil-cooling system | | Air-cooled type and water-cooled type | Air-cooled type and water-cooled type |
| Transfer type | | Active Trac AWD | Active Trac AWD |
| Shift ratios | LOW | 1.925 | 1.925 |
| | HIGH | 1.000 | 1.000 |
| Speedometer gear ratio | | 25/8 | V4AW3-7-LIR ... 29/9<br>V4AW3-7-MGRL ... 27/9<br>V4AW3-7-MHRL ... 28/9 |

# SERVICE SPECIFICATIONS

23100030062

| Items | | V4AW2 | V4AW3 |
|---|---|---|---|
| Stall speed (r/min.) | | 2,100–2,400 | 2,100–2,600 |
| Governor pressure kPa (psi) | 1,000 rpm | 140–170 (19.9–24.2) | – |
| | 2,000 rpm | 250–290 (35.6–41.2) | – |
| | 3,000 rpm | 410–470 (58.3–66.8) | – |
| Line pressure kPa (psi) | D range When idling | 520–600 (74–85) | 430–490 (61–70) |
| | D range During stall | 1,100–1,300 (156–185) | 1,140–1,390 (162–198) |
| | R range When idling | 790–910 (112–129) | 520–620 (74–88) |
| | R range During stall | 1,600–2,000 (228–284) | 1,400–1,750 (199–249) |
| Transmission and transfer assembly | Distance between inner cable stopper and edge of dust cover mm (in.) | 0–1 (0–.04) | 0–1 (0–.04) |

# LUBRICANTS

23100040065

| Items | Specified lubricants | Quantity |
|---|---|---|
| Automatic transmission fluid | DIAMOND ATF SP, ATF DEXRON II or equivalent | Approx. 7.2 $dm^3$ (7.6 qts.) ... V4AW2 |
| | DIAMOND ATF SP, ATF DEXRON II or equivalent | Approx. 8.5 $dm^3$ (9.0 qts.) ... V4AW3 |
| Transfer oil | Hypoid gear oil SAE 75W-85W conforming to API classification GL-4 or higher | Approx. 2.3 $dm^3$ (2.4 qts.) ... V4AW2 |
| | Hypoid gear oil SAE 75W-85W conforming to API classification GL-4 or higher | Approx. 2.5 $dm^3$ (2.4 qts.) ... V4AW3 |
| Transfer control lever assembly O-ring | Hypoid gear oil SAE 75W-85W conforming to API classification GL-4 or higher | Small quantity |
| Transfer oil seal lip | Hypoid gear oil SAE 75W-90 or 75W-85W conforming to API classification GL-4 or higher | As required |
| Oil filler pipe O-ring | DIAMOND ATF SP, ATF DEXRON II or equivalent | As required |

## SEALANTS AND ADHESIVES

23100050013

| Items | | Specified sealants and adhesives |
|---|---|---|
| Transmission control | Transfer control lever assembly gasket | 3M ATD Part No. 8663 or equivalent |
| | Stopper plate gasket | 3M ATD Part No. 8663 or equivalent |
| | Transfer control lever assembly mounting bolt | 3M Stud Locking No. 4170 or equivalent |
| Transmission and transfer assembly | Control housing gasket | 3M ATD Part No. 8663 or equivalent |
| | Control housing mounting bolt | 3M Stud Locking No. 4170 or equivalent |

## SPECIAL TOOLS

23100060078

| Tool | Tool number and name | Supersession | Application |
|---|---|---|---|
|  | MD998330 (includes MD998331) Oil pressure gage (3,000 kPa, 427 psi) | MD998330-01 | Measurement of oil pressure |
|  | MD999563 (includes MD998331) Oil pressure gage (1,000 kPa, 142 psi) | MD998330-01 | |
| 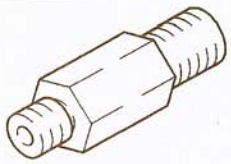 | MD998920 Adapter | MD998920 | Connection for oil pressure gage |
| 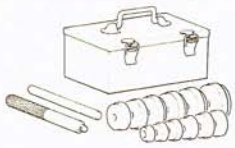 | MB990925 Bearing and oil seal installer set | MB990925-01 | Installation of oil seal MB990938, MB990928 (Refer to GROUP 22 – Special Tools.) |
| 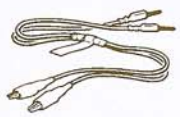 | MB991529 Diagnostic trouble code check terminal | MB991529 | Reading the diagnostic trouble codes |
|  | MB991502 Scan tool (MUT-II) | MB991502 | Checking of the diagnosis code |
|  | ROM pack | – | |

**TSB Revision**

# TROUBLESHOOTING <V4AW2>

23100070019

Automatic transmission malfunctions may be caused by the following conditions:
(1) Improper maintenance and adjustment
(2) Mechanical malfunctions
(3) Hydraulic malfunctions
(4) Poor engine performance

Troubleshooting in the event of any such malfunctions should begin by checking the fluid level, ATF condition, manual linkage adjustment, throttle control cable adjustment and other conditions for which deviation from standards can be readily known. Then, a road test should be carried out to determine whether or not the problem has been corrected or more diagnosis is necessary. If the problem still persists after these tests and corrections, hydraulic tests should be carried out for further troubleshooting.

## ROAD TEST

Prior to performing the road test, be sure to make basic checks including check and adjustment of fluid level and condition and adjustment of the throttle cable. For the road test, the transfer must be placed in the 2H (RWD-high) position. During the road test, various changes such as slips in transmission and shifting conditions are checked and hence the transmission operation at each shift position must have been checked.

## D RANGE TEST

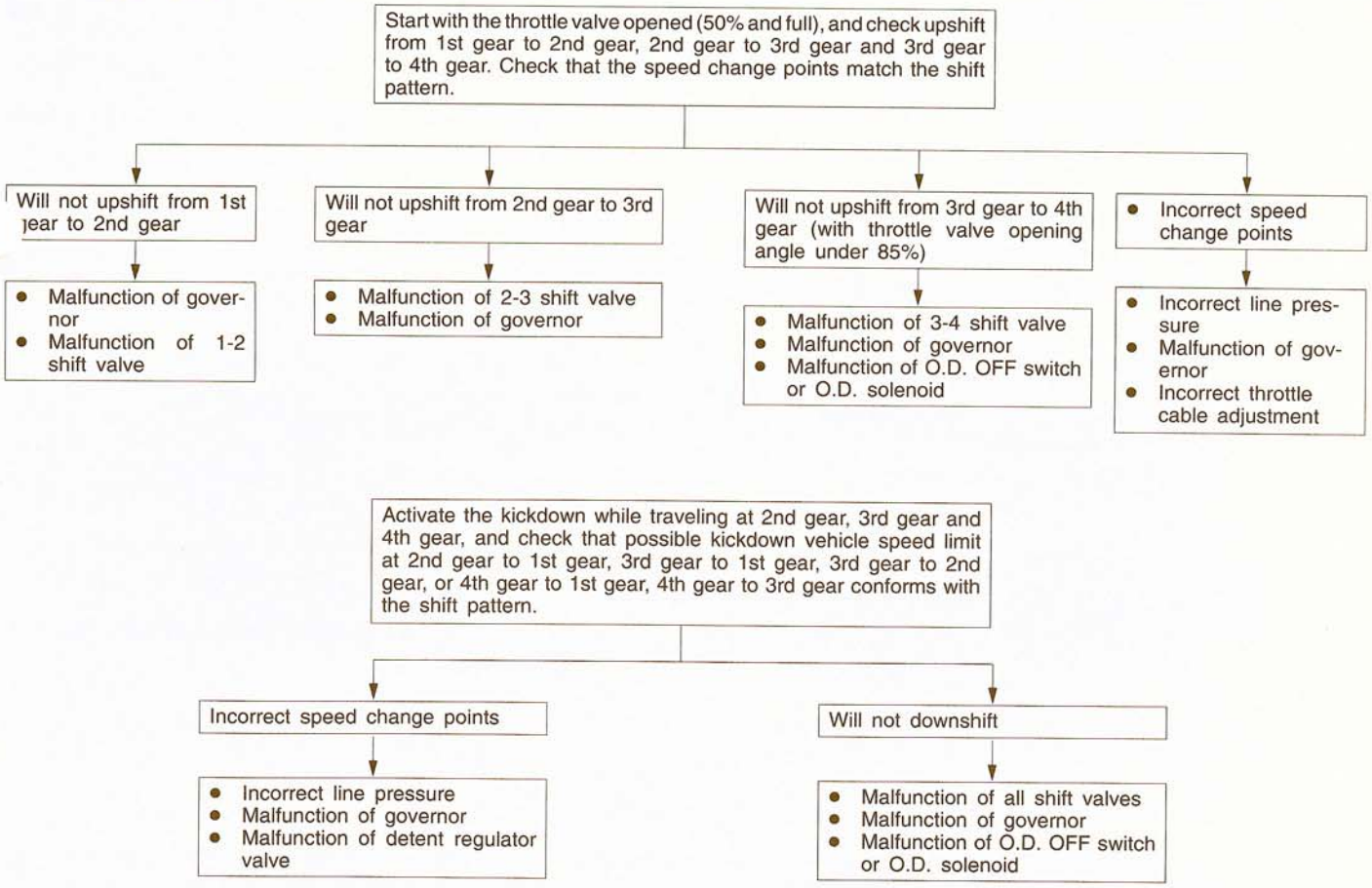

When traveling in 3rd gear or 4th gear, release the accelerator and shift the selector lever to L. Check that 3rd gear to 2nd gear or 4th gear to 3rd gear downshifting takes place immediately and 2nd gear to 1st gear downshifting conforms to the shift pattern.

- Incorrect speed change points
  - Incorrect throttle cable adjustment
  - Malfunction of governor
  - Incorrect line pressure
  - Malfunction of low-coast modulator valve
- Will not downshift from 2nd gear to 1st gear
  - Malfunction of 1-2 shift valve
  - Malfunction of Governor

When traveling in 3rd gear or 4th gear, shift the selector lever to 2 and L and check the engine brake function in each range.

- Engine brake will not function in 2nd range.
  - Malfunction of brake No. 1
- Engine brake will not function in L range.
  - Malfunction of brake No. 3

Check for abnormal noise(s) during acceleration and deceleration. Check for shocks when slipping and changing speed.

- Strong shock
  - High line pressure
  - Malfunction of accumulator
  - Malfunction of check ball

Check for abnormal noise(s) or vibration when traveling in 3rd gear or 4th gear.

- Strong abnormal noise and vibration
  - Incorrect torque converter installation
  - Malfunction of oil pump
  - Speed change gear wheel not meshing correctly
  - Incorrect drive plate installation

NOTE
Abnormal noises and vibrations are often caused by an unbalanced propeller shaft, differential, tire, torque converter, engine etc. Extremely thorough inspection is therefore required.

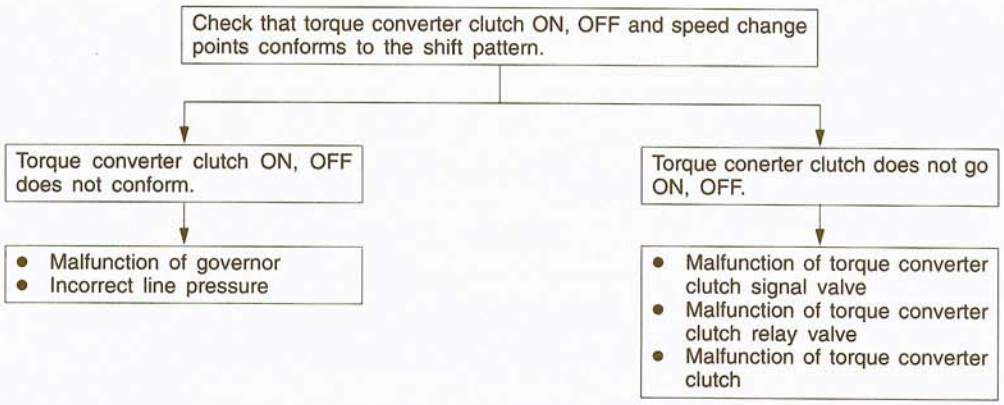


NOTE
(1) Determine the moment when the torque converter clutch turns on from decreased engine r/min. or by a slight shock back and forth.
(2) Determine the moment when the torque converter clutch turns off from increased engine r/min.
(3) Check the lock-up condition by pumping the accelerator slightly. If the engine r/min. rises in accordance with the throttle valve opening angle, the torque converter clutch is off, and if it does not, the clutch is on. (When the torque converter clutch is off, drive power is transferred through the fluid in the torque converter and therefore, when the accelerator pedal is depressed, slipping occurs inside the torque converter with a resulting large increase in engine r/min.)

## 2 RANGE TEST

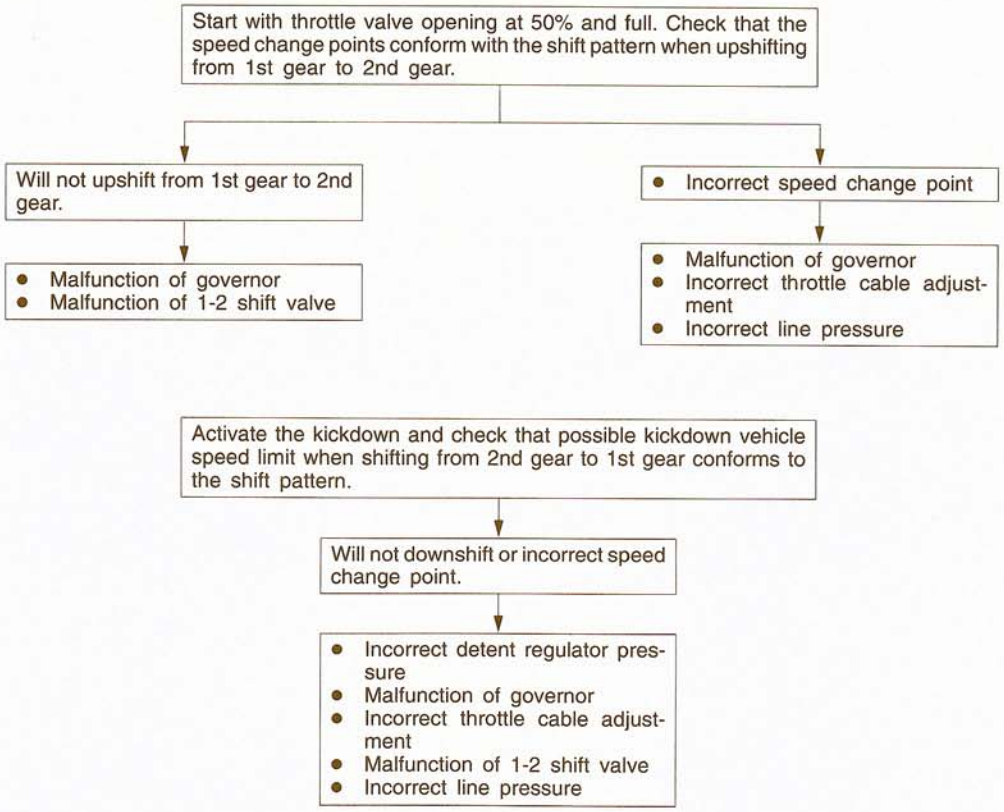

## L RANGE TEST

Check that it does not upshift to 2nd gear.

↓

Upshifts

↓

- Malfunction of low-coast modulator valve
- Malfunction of governor
- Low line pressure

## R RANGE TEST

Start the engine with the throttle valve fully open, and check for slippage.

↓

Slippage

↓

- Malfunction of brake No. 3
- Malfunction of O.D. clutch or direct clutch
- Malfunction of O.D. one-way clutch
- Low line pressure

## P RANGE TEST

Park the vehicle on an incline (more than 5°). Release the parking and service brakes and check that the vehicle does not move.

↓

Vehicle moves

↓

- Malfunction of park mechanism
- Incorrect shift lever adjustment

## SHIFT PATTERN

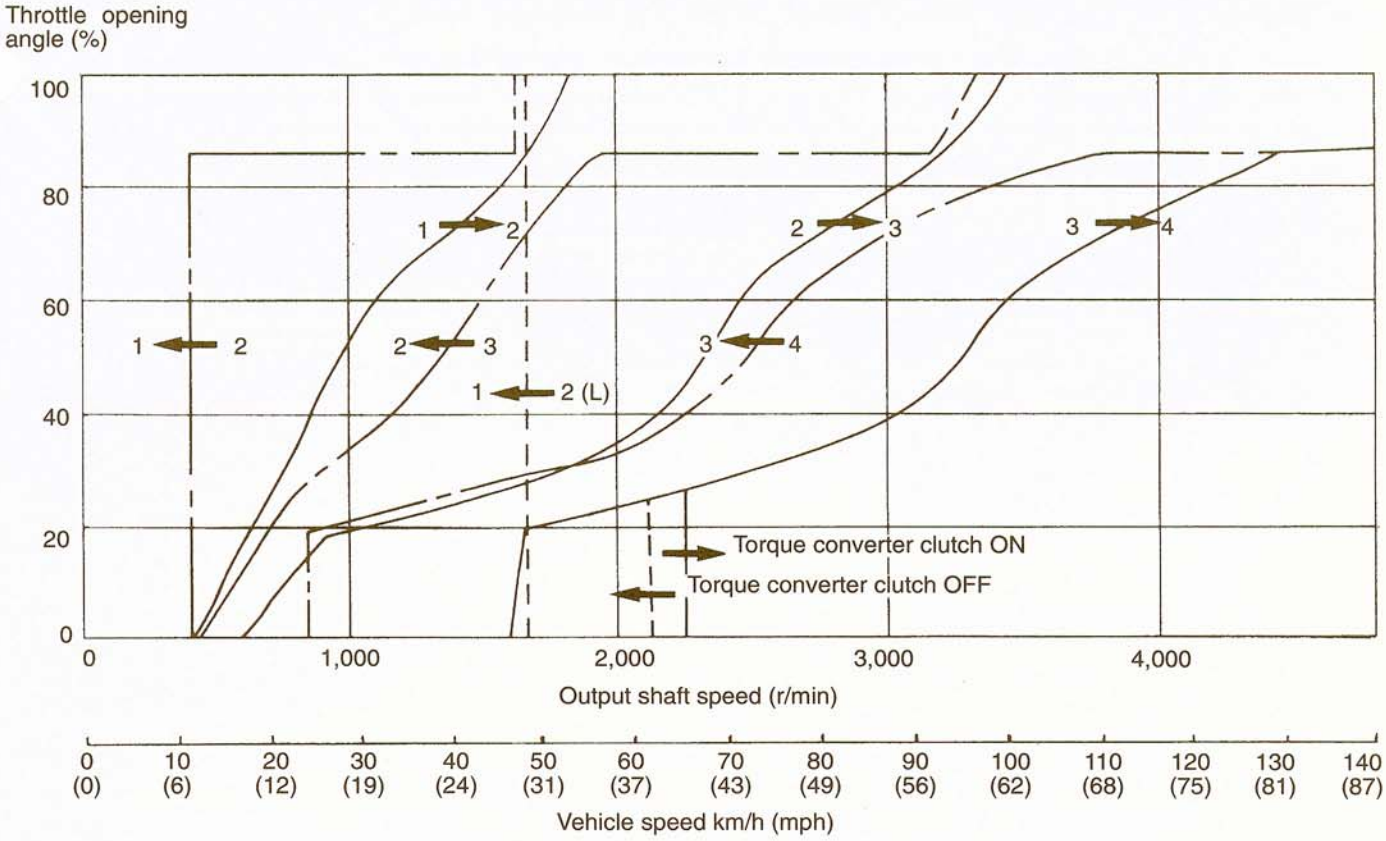


TRA0342

# TROUBLESHOOTING <V4AW3>

23100760077

## STANDARD FLOW OF DIAGNOSTIC TROUBLESHOOTING

Malfunctions of the 4 A/T system can be caused by malfunctions or incorrect adjustments of the electror. control system, hydraulic control system or A/T system or a combination of these.
Carry out troubleshooting by the following procedure in order to make effective diagnoses.

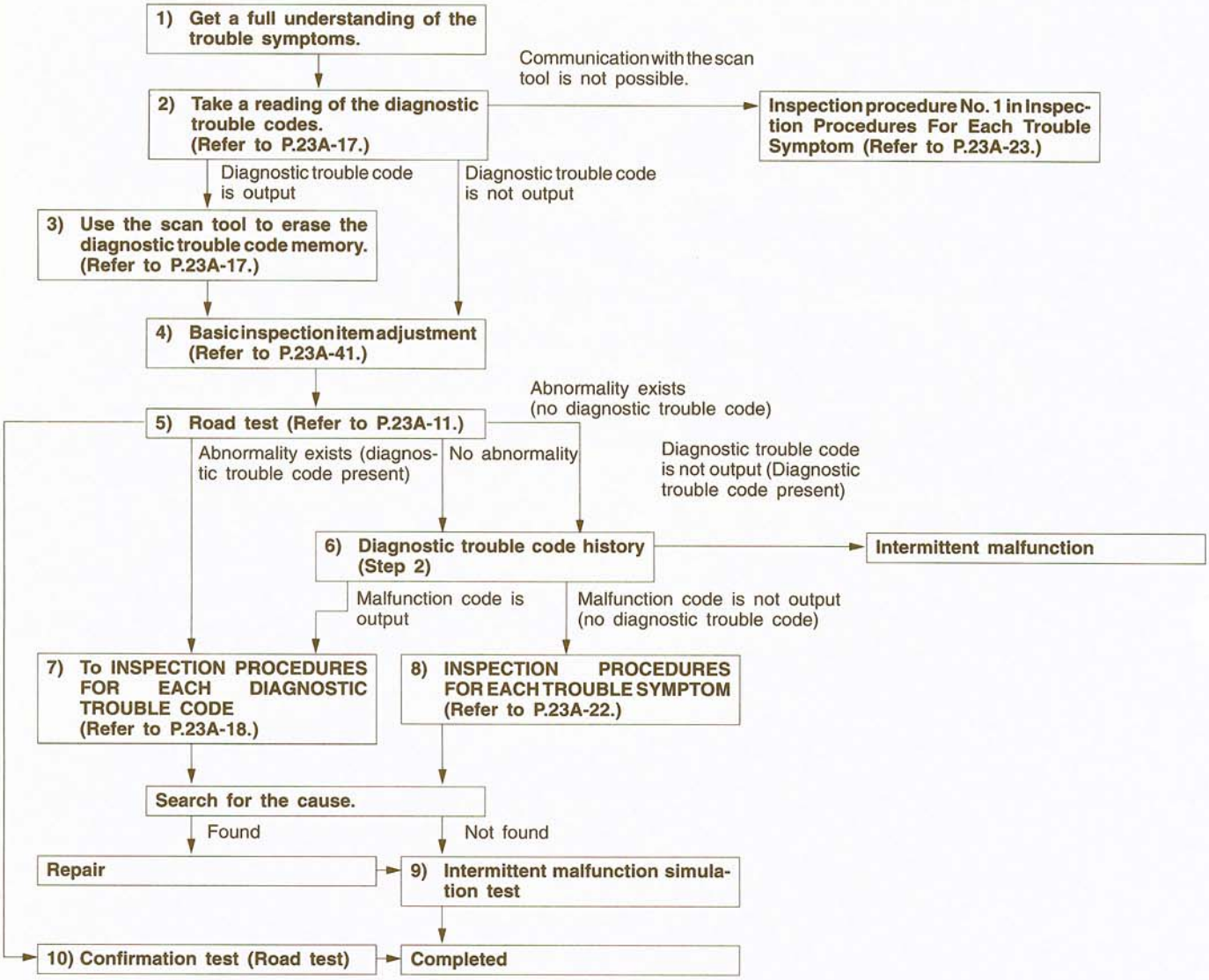


1) Get a full understanding of the conditions under which the trouble symptoms that the customer is complaining about occur, including frequency of occurrence.
2) Use the scan tool to read and make a note of the diagnostic trouble codes (including fail-safe codes). (Refer to P.23A-17.)
3) Erase the diagnostic trouble codes in order to carry out a road test. (Refer to P.23A-17.)
4) Carry out adjustment of the basic inspection items (ATF, TPS, park/neutral position switch, throttle cable, etc.). (Refer to P.23A-41.)
5) Carry out a road test. (Refer to P.23A-11.) Be sure to check that the basic inspection items and all diagnostic trouble codes and conditions of reoccurrence are covered during this test.
6) Check that the diagnostic trouble codes which were read before the road test (in step (2) above) are present.
7) Determine the probable cause from the Inspection Procedures For Each Diagnostic Trouble Code. (Refer to P.23A-18.)
8) Determine the probable cause from the Inspection Procedures For Each Trouble Symptom. (Refe to P.23A-22.)
9) Carry out a intermittent malfunction simulation test. (Refer to GROUP 00 – How To Use This Manual.)
10) After repairs are completed, carry out a road test to check that the malfunction has been repaired.

**TSB Revision**

## ROAD TEST (Transfer Lever Position: 4H Range)

23100780073

| Procedure | Conditions | Operation | Judgement value | Inspection item | Inspection procedure page |
|---|---|---|---|---|---|
| 1 | Ignition switch: ON<br>Engine: Stopped | Overdrive switch<br>(1) ON<br>(2) OFF | ★ Data List No. 35<br>(1) O.D.<br>(2) O.D.-OFF | Overdrive switch | Overdrive switch system (P.23A-33) |
| | | Pattern select switch<br>(1) Power<br>(2) Hold | ★ Data List No. 36<br>(1) Power<br>(2) Hold | Pattern select switch | Pattern select switch system (P.23A-33) |
| | | Selector lever position<br>(1) P<br>(2) R<br>(3) N<br>(4) D<br>(5) 2<br>(6) L | ★ Data List No. 37<br>(1) P, R, D<br>(2) P, R, D<br>(3) N<br>(4) P, R, D<br>(5) 2<br>(6) L | Park/neutral position switch | Park/neutral position switch system (P.23A-32) |
| | | Brake pedal<br>(1) Depressed<br>(2) Released | ★ Data List No. 28<br>(1) ON<br>(2) OFF | Stop lamp switch | Stop lamp switch system (P.23A-34) |
| 2 | Ignition switch: ST<br>Engine: Stopped | Engine starting test in P and N positions | Starting should be possible | Starting | Does not move forward or reverse (P.23A-24) |
| | | | | | Does not move forward only (P.23A-24) |
| | | | | | Does not move reverse only (P.23A-25) |
| | | | | | Malfunction of lock-up (P.23A-31) |
| 3 | Warming up | (1) When engine is cold | ★ Data List No. 29<br>(1) ON<br>(2) OFF | Engine coolant temperature switch | Engine coolant temperature switch system (P.23A-34) |
| | | (2) Drive for 15 minutes or more so that the ATF temperature becomes 70–90°C (158–194°F). | ★ Data List No. 15<br>(2) 70–90°C (158–194°F) | Oil temperature sensor | Oil temperature sensor system (P.23A-35) |
| 4 | Engine: Idling<br>Selector lever position: N | Accelerator pedal<br>(1) Fully closed<br>(2) Depressed<br>(3) Fully open (up to 2 seconds) | ★ Data List No. 11<br>(1) 0–5%<br>(2) Gradually rises (1)<br>(3) 85–100% | TPS | Code No. 11–TPS system (P.23A-19) |

| Procedure | Conditions | Operation | Judgement value | Inspection item | Inspection procedure page |
|---|---|---|---|---|---|
| 4 | Engine: Idling<br>Selector lever position: N | Selector lever operation<br>(1) N to D shift<br>(2) N to R shift | Should be no abnormal shifting shocks<br>Time lag should be within 2 seconds | Does not move | Does not move forward or reverse (P.23A-24) |
| | | | | | Does not move forward only. (P.23A-24) |
| | | | | | Does not reverse only (P.23A-25) |
| | | | | Shock | Large shocks (P.23A-29) |
| 5 | Engine: Idling (Vehicle stopped)<br>Selector lever position: D<br>Mode selection: Normal | Accelerator pedal<br>(1) Fully closed | ★ Data List No. 27<br>(1) 1st | Shift solenoid No. 1 | Code Nos. 41, 42–Shift solenoid No. 1 system (P.23A-20) |
| | | | | Shift solenoid No. 2 | Code Nos. 43, 44–Shift solenoid No. 2 system (P.23A-21) |
| 6 | Selector lever position: D<br>Mode selection:<br>Normal Overdrive: OFF | Engine<br>(1) Idling (Vehicle stopped)<br>(2) Driving at 10 km/h (6 mph)<br>(3) Driving at a constant speed of 50 km/h (31 mph) (20 seconds or more)<br>(4) Driving at a constant speed of 40 km/h (24 mph) with the selector lever in 2 range | ★ Data List No. 27<br>(1) 1st<br>(2) 1st<br>(3) 3rd<br>(4) 2nd | Shift solenoid No. 1 | Code Nos. 41, 42–Shift solenoid No. 1 system (P.23A-20) |
| | | | | Shift solenoid No. 2 | Code Nos. 43, 44–Shift solenoid No. 2 system (P.23A-21) |
| | | | ★ Data List No. 32<br>(1) 0 km/h (0 mph)<br>(2) 7–13 km/h (4–8 mph)<br>(3) 42–58 km/h (26–36 mph)<br>(4) 33–47 km/h (20–29 mph) | A/T speed sensor | A/T speed sensor system (P.23A-19) |
| | | | ★ Data List No. 41<br>(2) ON<br>(3) OFF<br>(4) ON | Shift solenoid No. 1 | Code Nos. 41, 42–Shift solenoid No. 1 system (P.23A-20) |
| | | | ★ Data List No. 43<br>(2) OFF<br>(3) ON<br>(4) ON | Shift solenoid No. 2 | Code Nos. 43, 44–Shift solenoid No. 2 system (P.23A-21) |
| | | | ★ Data List No. 47<br>(2) OFF<br>(3) ON<br>(3) Acceleration should be smooth with no abnormal vibration. | malfunction of lock-up solenoid when shifting | Code Nos. 47, 48–Lock-up solenoid (P.23A-21) |
| | | | | | Shifting point abnormality (P.23A-27) |
| | | | | | Slippage (vibration) (P.23A-30) |

TSB Revision 97-23-001

| Procedure | Conditions | Operation | Judgement value | Inspection item | Inspection procedure page |
|---|---|---|---|---|---|
| 7 | Selector lever position: D<br>Mode selection:<br>Normal Overdrive: ON | Engine<br>(1) Driving at a constant speed of 50 km/h (31 mph) (20 seconds or more) | ★ Data List No. 27<br>(1) 4 | Shift solenoid No. 1 | Code Nos. 41, 42 – Shift solenoid No. 1 system (P.23A-20) |
| | | | | Shift solenoid No. 2 | Code Nos. 43, 44 – Shift solenoid No. 2 system (P.23A-21) |
| | | | ★ Data List No. 41<br>(1) OFF | Shift solenoid No. 1 | Code Nos. 41, 42 – Shift solenoid No. 1 system (P.23A-20) |
| | | | ★ Data List No. 43<br>(1) OFF | Shift solenoid No. 2 | Code Nos. 43, 44 – Shift solenoid No. 2 system (P.23A-21) |
| 8 | Selector lever position: D<br>Mode selection:<br>Normal Overdrive: ON<br>• Carry out the same test with the mode selection at POWER and HOLD also. | Monitor scan tool data list Nos. 11, 27 and 32.<br>(1) TPS: Accelerate to 4th gear at opening angle of 30%.<br>(2) Slowly decelerate to a standstill.<br>(3) TPS: Accelerate to 4th gear at opening angle of 50%.<br>(4) At 50 km/h (30 mph) in 4th gear, turn the overdrive OFF.<br>(5) At 50 km/h (30 mph) in 3 range, move the selector lever to 2 range.<br>(6) At 20 km/h (12 mph) in 2 range, move the selector lever to L range. | (1), (2) and (3) should match the specified output shaft speed (vehicle speed), and there should be no abnormal shocks.<br>For (4), (5) and (6), downshifting should occur immediately after moving the lever. | Abnormality while shifting | Upshifting does not occur (P.23A-25) |
| | | | | | Downshifting does not occur (P.23A-26) |
| | | | | | Shifting point abnormality (P.23A-27) |
| | | | | | Upshifting occurs spontaneously (P.23A-27) |
| | | | | | Incorrect drive gear position (P.23A-28) |
| | | | | Malfunction while driving | Large shocks (P.23A-29) |
| | | | | | Slippage (vibration) (P.23A-30) |
| | | | | | Malfunction of lock-up (P.23A-31) |
| | | | | | Abnormal engine braking (P.23A-31) |

## SHIFT PATTERN

### <3.5L engine>
### Normal pattern

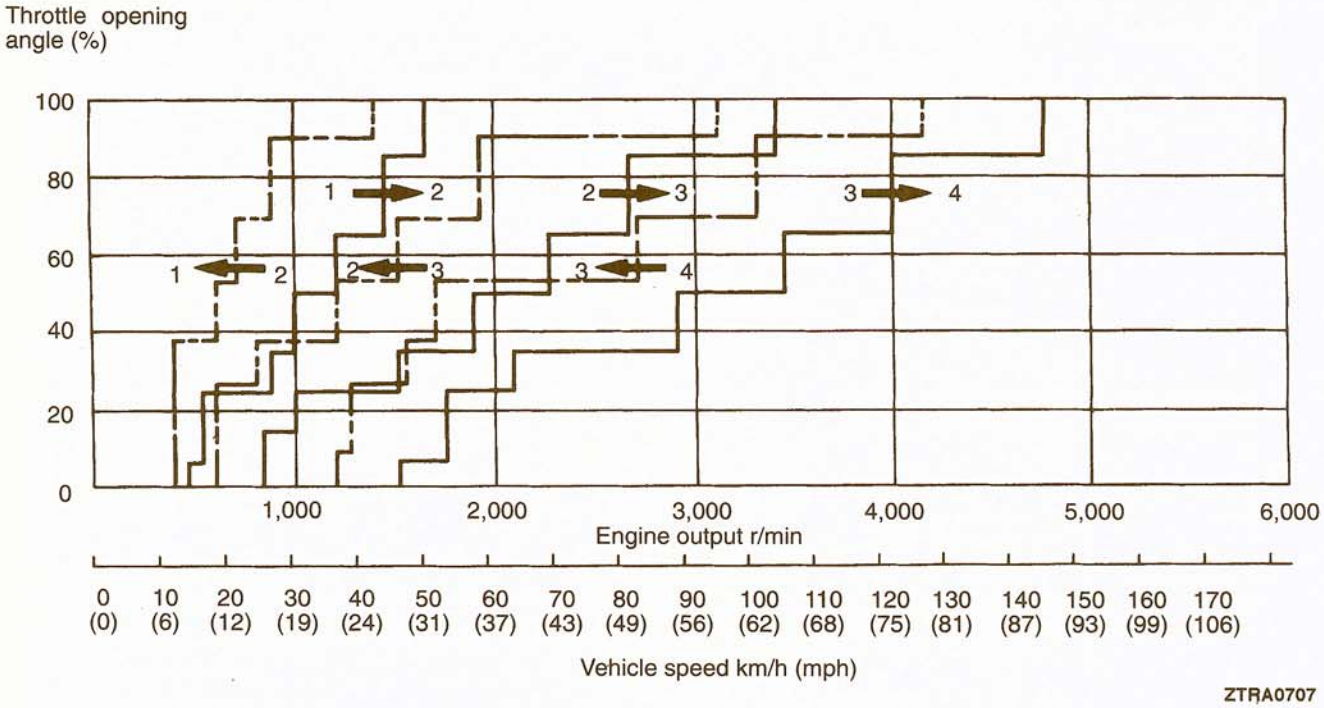


ZTRA0707

### Power pattern

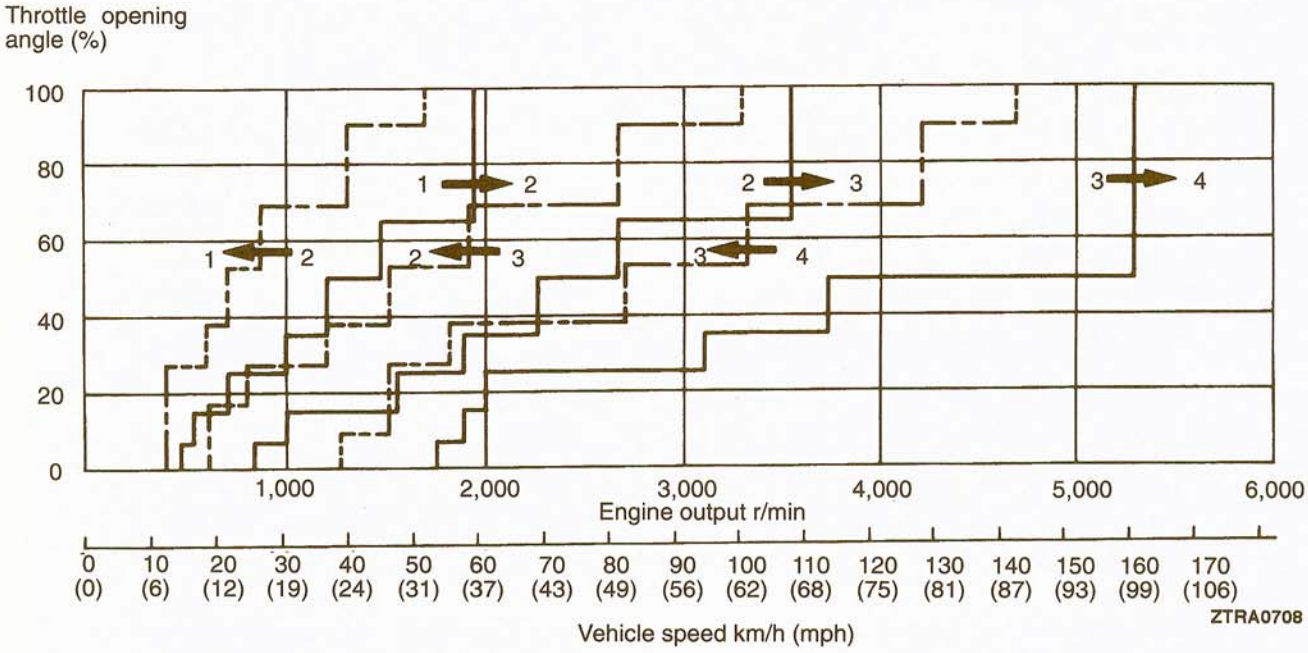


ZTRA0708

**TSB Revision**

## Hold pattern

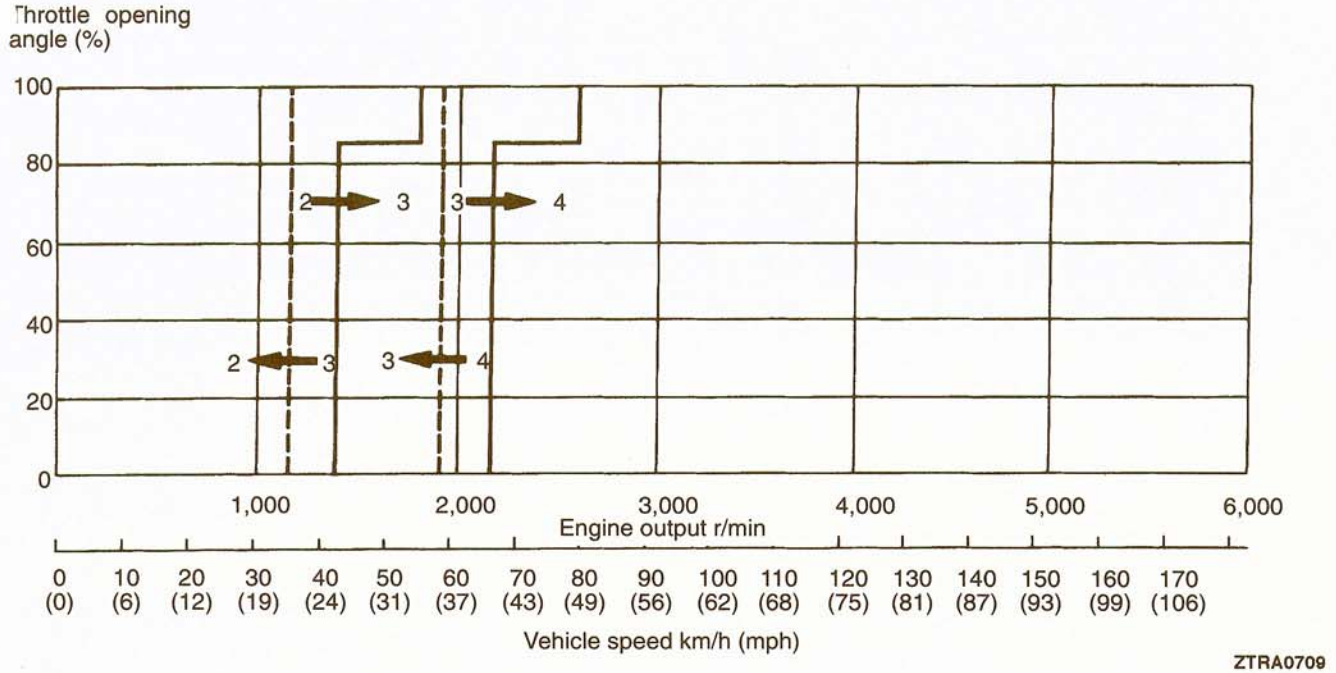


ZTRA0709

## <3.0L 24VALVE engine>
## Normal pattern

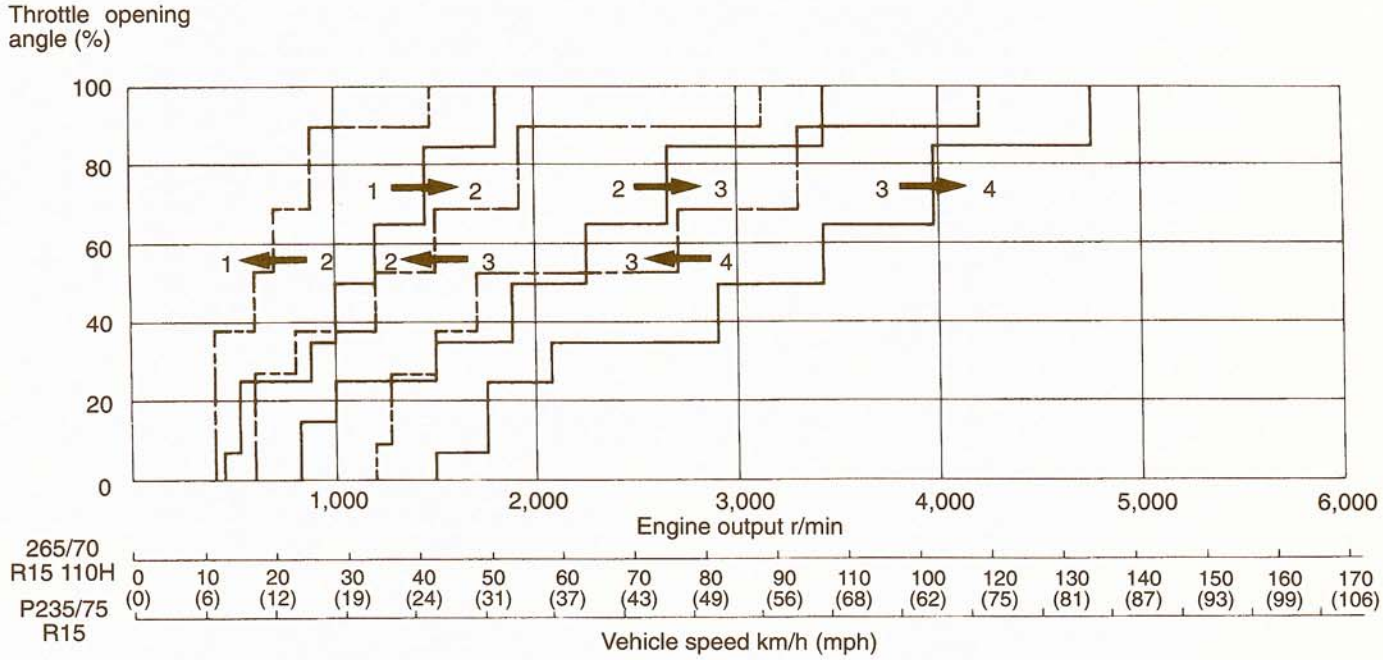


TRA0821

**TSB Revision**

## Power pattern

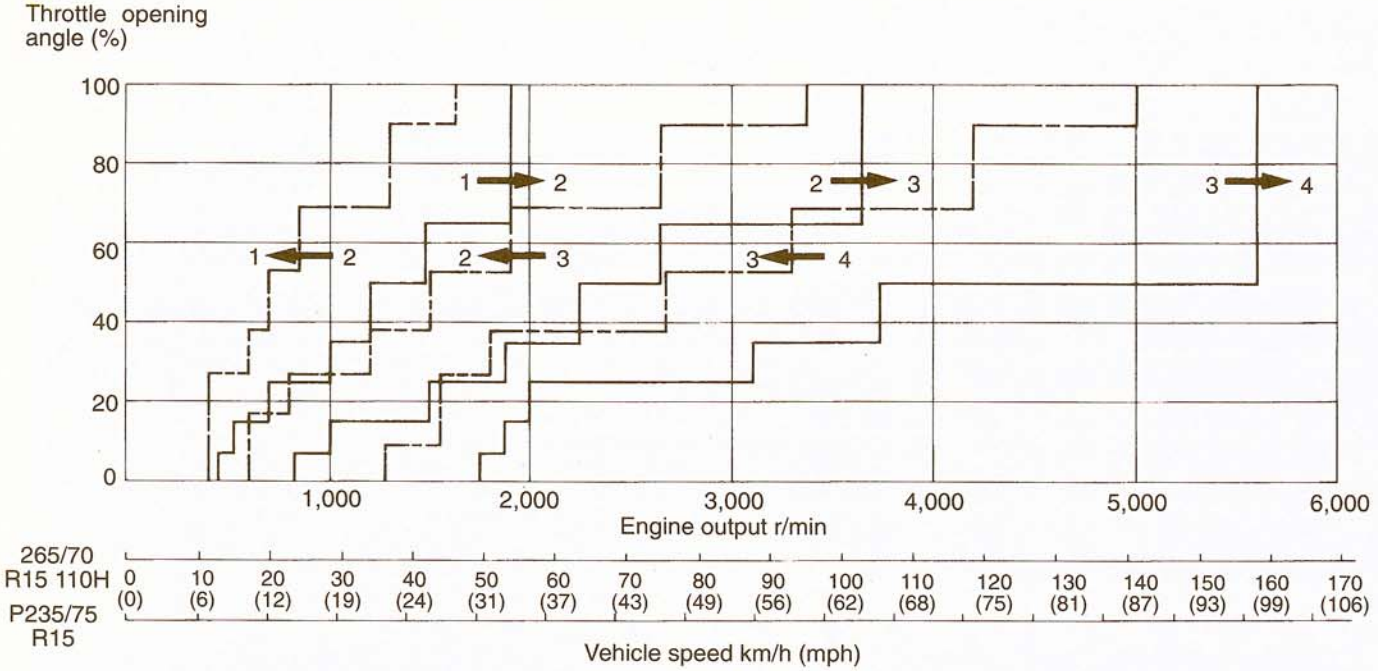


TRA0822

## Hold pattern

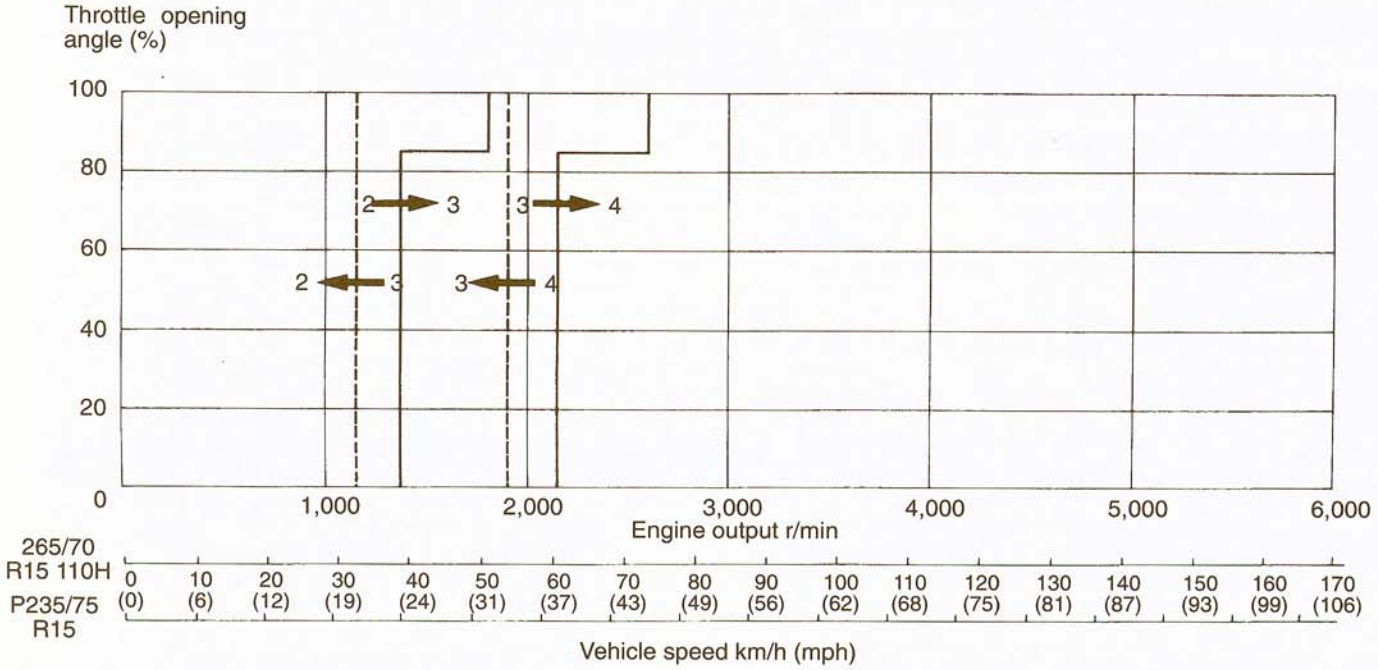


TRA0823

**TSB Revision**

## DIAGNOSTIC FUNCTIONS

23100770063

### PRECAUTIONS BEFORE SERVICE

(1) If the battery positive voltage is low, diagnostic trouble codes will not be output. Accordingly, check the battery before carrying out inspection.
(2) If the battery is disconnected or if the engine control module connector is disconnected, the diagnostic trouble code memory will be erased.
Accordingly, the battery should not be disconnected until reading of the diagnostic trouble codes has been completed.

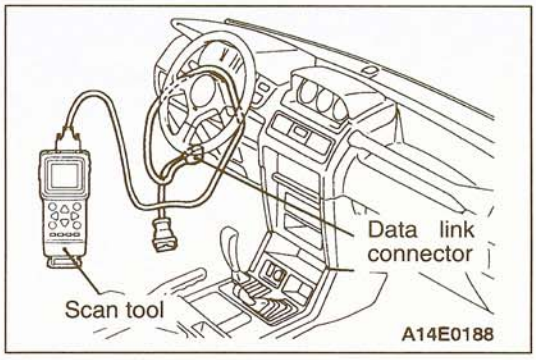


### READING THE DIAGNOSTIC TROUBLE CODES

**<When using the scan tool>**

**Caution**
**Turn the ignition switch OFF before connecting or disconnecting the scan tool.**

(1) Connect the scan tool to the data link connector.
(2) Turn the ignition switch to the ON position.
(3) Take a reading of the diagnostic trouble code output.
(4) Repair the malfunction location while referring to the Inspection Procedures For Each Diagnostic Trouble Code.
(5) Turn the ignition switch to OFF and then back to ON again.
(6) Erase the diagnostic trouble codes.
(7) Check that the diagnostic trouble code output is normal.

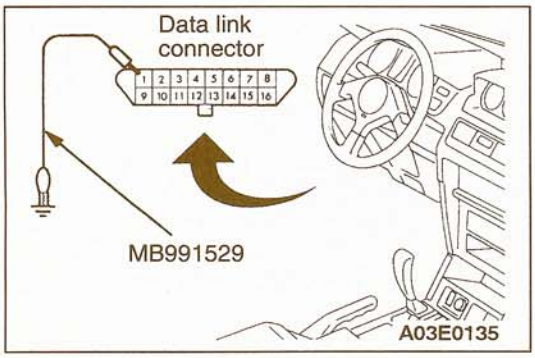


**<When using the oil temperature warning lamp>**

(1) Use the special tool (diagnostic trouble code check harness) to ground terminal No. 1 of the data link connector.
(2) Take a reading of the diagnostic trouble codes from the flashing of the oil temperature warning lamp.
(3) Repair the malfunction location while referring to the Chart Classified by Diagnostic Trouble Codes.
(4) Erase the diagnostic trouble codes by the following procedure.
    1) Turn the ignition switch to OFF.
    2) After disconnecting the battery cable from the negative battery terminal for 10 seconds or more, re-connect the cable.
    3) Turn the ignition switch to ON, take a reading of the diagnostic trouble code output and check that a normal code is output.
    4) After the engine has warmed up, run it at idle for about 10 minutes.

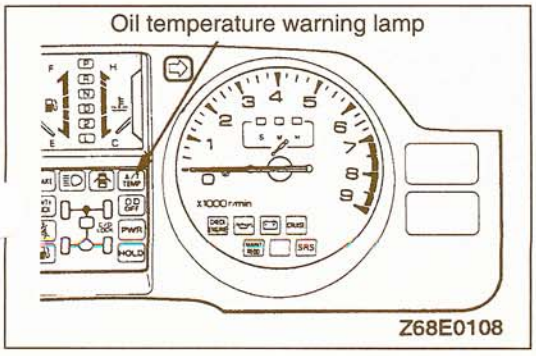

## UNDERSTANDING DIAGNOSIS RESULT BY THE OIL TEMPERATURE WARNING LAMP FLASHING

| Example of flashing when a diagnostic trouble code is output | Flashing when normal |
|---|---|
| For diagnostic trouble code No. 24<br> 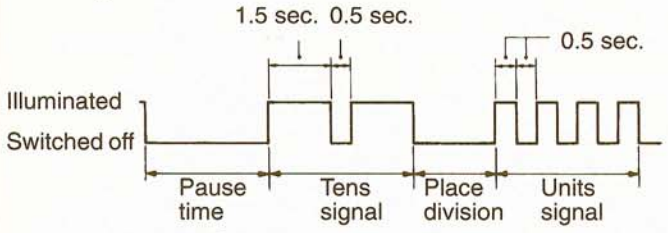 <br><br>Z6FU2060 | 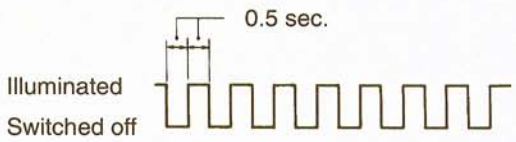 <br><br>Z6FU2061 |

NOTE
Other diagnostic trouble codes also are output by the flashing of the check warning lamp corresponding to the same code numbers as when using the scan tool.

## CHART CLASSIFIED BY DIAGNOSTIC TROUBLE CODES

23100790090

| Code | Diagnostic item | | Reference page |
|---|---|---|---|
| 11 | Throttle position sensor system | Malfunction of sensor<br>Open or short-circuit | 23A-19 |
| 32 | A/T speed sensor | Open circuit | 23A-19 |
| 38 | Vehicle speed sensor | Open circuit | 23A-20 |
| 41 | Shift solenoid No. 1 system | Open circuit | 23A-20 |
| 42 | Shift solenoid No. 1 system | Short-circuit | 23A-20 |
| 43 | Shift solenoid No. 2 system | Open circuit | 23A-21 |
| 44 | Shift solenoid No. 2 system | Short-circuit | 23A-21 |
| 47 | Lock-up solenoid system | Open circuit | 23A-21 |
| 48 | Lock-up solenoid system | Short-circuit | 23A-21 |

# INSPECTION PROCEDURES FOR EACH DIAGNOSTIC TROUBLE CODE

| Code No. 11 Throttle position sensor system | Probable cause |
|---|---|
| :omment]<br>, the TPS output becomes 4.95 V or more, TPS output is excessive, and if the TPS output becomes 0.09 V or less, TPS output is insufficient. In both cases, diagnostic trouble code No. 11 is output. | • Malfunction of throttle position sensor<br>• Malfunction of connector<br>• Malfunction of TCM |

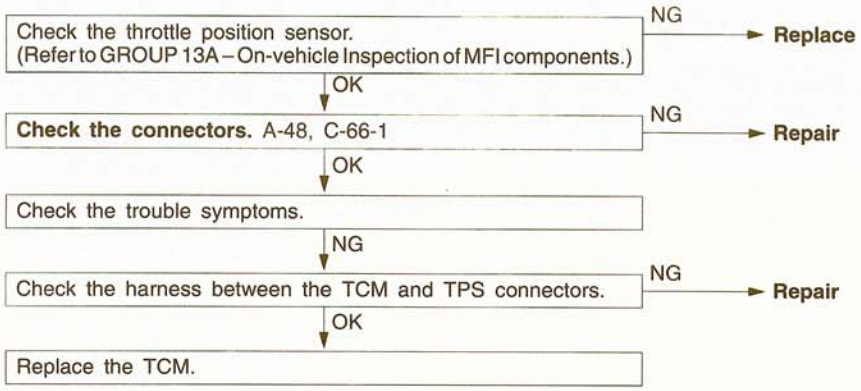


| Code No. 32 A/T speed sensor | Probable cause |
|---|---|
| [Comment]<br>If the vehicle moves 800 m or more while there is no output from the A/T speed sensor during the time that four pulses are input from the vehicle speed sensor, then there is judged to be an open circuit in the A/T speed sensor, and diagnostic trouble code No. 32 is output. | • Malfunction of A/T speed sensor<br>• Malfunction of connector<br>• Malfunction of sensor rotor<br>• Malfunction of TCM<br>• Noise generated |

★ : Refer to Transmission Overhaul.

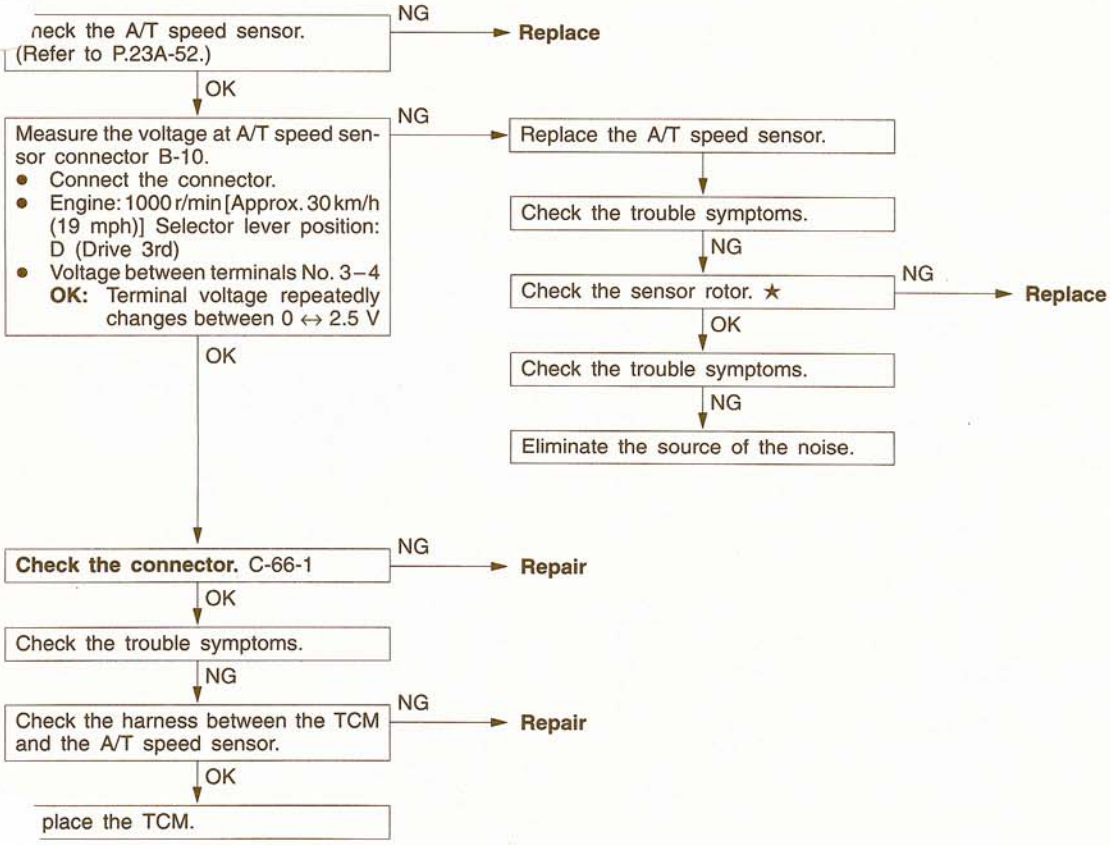

| Code No. 38 Vehicle speed sensor system | Probable cause |
|---|---|
| [Comment]<br>If the vehicle moves 800 m or more while there is no output from the vehicle speed sensor during the time that 13 pulses (when the transfer control lever is at HIGH) or 25 pulses (when the transfer control lever is at LOW) are input from the A/T speed sensor, then there is judged to be an open circuit in the vehicle speed sensor, and diagnostic trouble code No. 38 is output. | • Malfunction of vehicle speed sensor<br>• Malfunction of connector<br>• Malfunction of TCM |

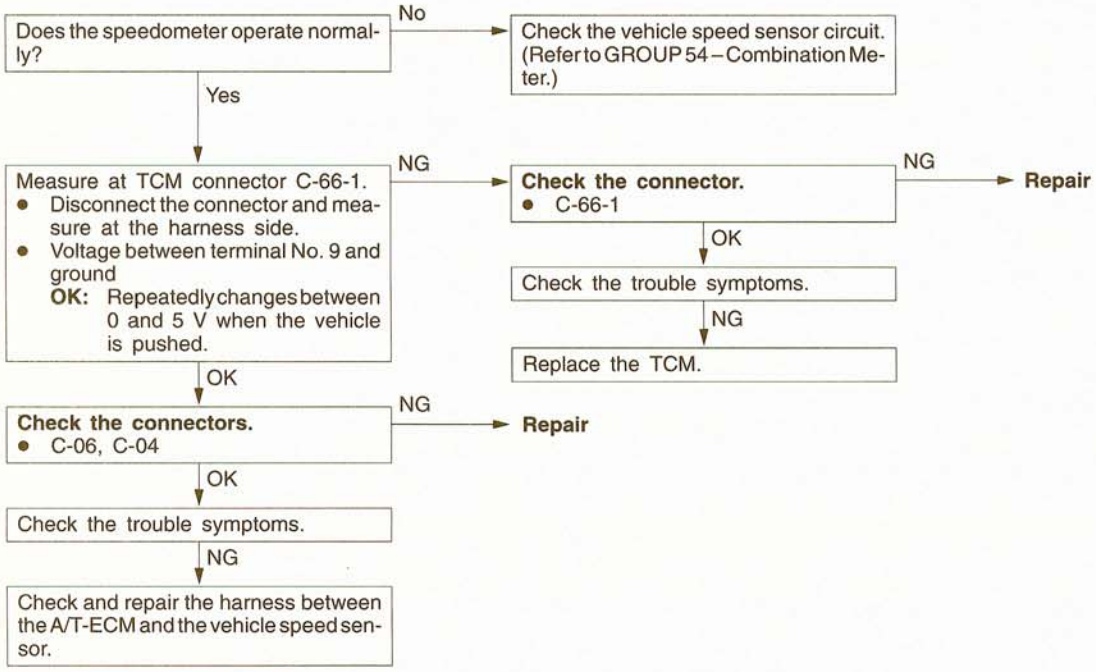


| Code Nos. 41, 42 Shift solenoid No. 1 system | Probable cause |
|---|---|
| [Comment]<br>If the resistance value of shift solenoid No. 1 is large, there is an open circuit in shift solenoid No. 1 and diagnostic trouble code No. 41 is output. If the resistance value is small, there is a short-circuit in shift solenoid No. 1 and diagnostic trouble code No. 42 is output. | • Malfunction of shift solenoid No. 1<br>• Malfunction of connector<br>• Malfunction of TCM |

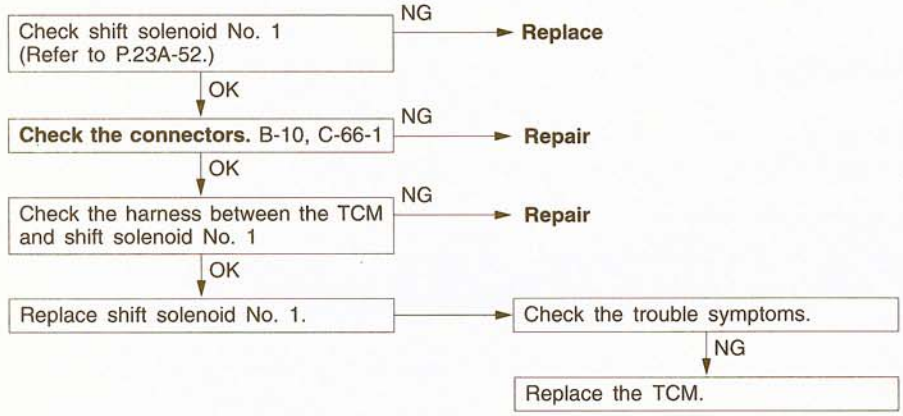


TSB Revision 97-23-001

| Code Nos. 43, 44 Shift solenoid No. 2 system | Probable cause |
|---|---|
| [Comment]<br>If the resistance value of shift solenoid No. 2 is large, there is an open circuit in shift solenoid No. 2 and diagnostic trouble code No. 43 is output. If the resistance value is small, there is a short-circuit in shift solenoid No. 2 and diagnostic trouble code No. 44 is output. | • Malfunction of shift solenoid No. 2<br>• Malfunction of connector<br>• Malfunction of TCM |

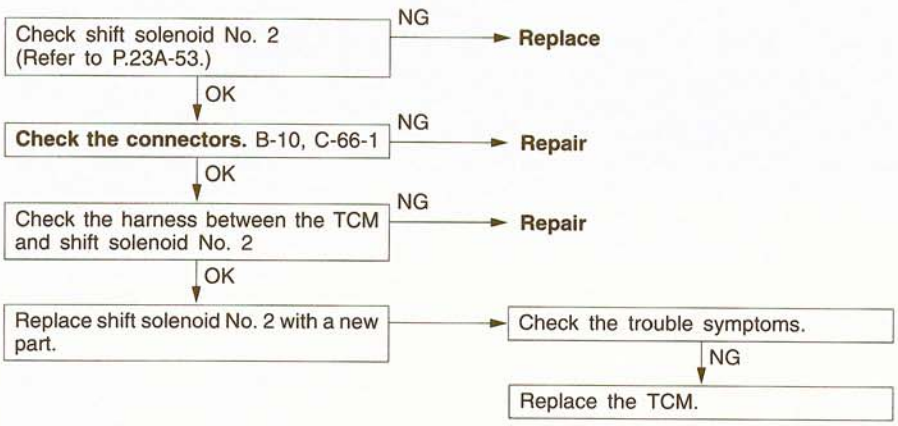


| Code Nos. 47, 48 Lock-up solenoid system | Probable cause |
|---|---|
| [Comment]<br>If the resistance value of the lock-up solenoid is large, there is an open circuit in the lock-up solenoid and diagnostic trouble code No. 47 is output. If the resistance value is small, there is a short-circuit in the lock-up solenoid and diagnostic trouble code No. 48 is output. | • Malfunction of lock-up solenoid<br>• Malfunction of connector<br>• Malfunction of TCM |

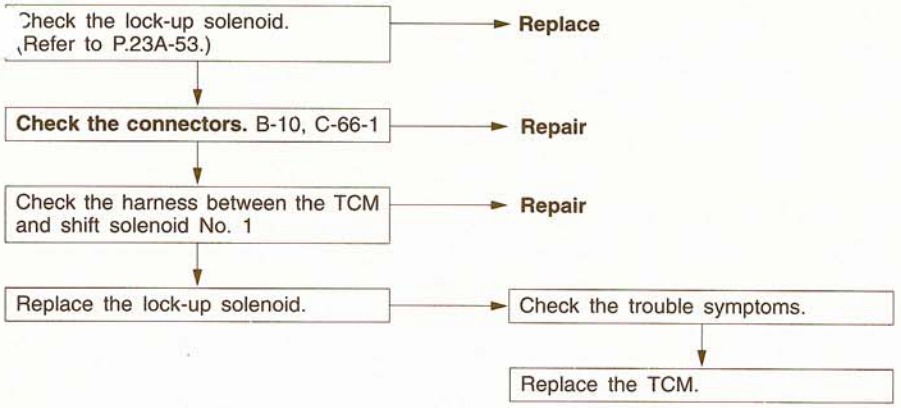

## CHART CLASSIFIED BY TROUBLE SYMPTOMS

23100800076

| Trouble symptom | | Inspection procedure No. | Reference page |
|---|---|---|---|
| Communication with the scan tool is not possible. | | 1 | 23A-23 |
| Does not move | Does not move forward or reverse | 2 | 23A-24 |
| | Does not move forward only | 3 | 23A-24 |
| | Does not reverse only | 4 | 23A-25 |
| Malfunction when shifting | Upshifting does not occur | 5 | 23A-25 |
| | Downshifting does not occur | 6 | 23A-26 |
| | Shifting point abnormality | 7 | 23A-27 |
| | Upshifting occurs spontaneously | 8 | 23A-27 |
| | Incorrect drive gear position | 9 | 23A-28 |
| Large shocks | | 10 | 23A-29 |
| Slippage (vibration) | | 11 | 23A-30 |
| Malfunction of lock-up | | 12 | 23A-31 |
| Abnormal engine braking | | 13 | 23A-31 |
| Electronic circuit systems | Park/neutral position switch system | 14 | 23A-32 |
| | Pattern select switch system | 15 | 23A-33 |
| | Overdrive switch system | 16 | 23A-33 |
| | Stop lamp switch system | 17 | 23A-34 |
| | Engine coolant temperature switch system | 18 | 23A-34 |
| | Oil temperature sensor system | 19 | 23A-35 |

# INSPECTION PROCEDURES FOR EACH TROUBLE SYMPTOM

## INSPECTION PROCEDURE 1

| ● Communication with the scan tool is not possible. | Probable cause |
|---|---|
| [Comment]<br>If communication with the scan tool is not possible, the cause is probably a malfunction in the on-board diagnostic system or the TCM is not functioning. | • Malfunction of on-board diagnostic system<br>• Malfunction of TCM power circuit<br>• Malfunction of TCM ground circuit<br>• Malfunction of TCM |

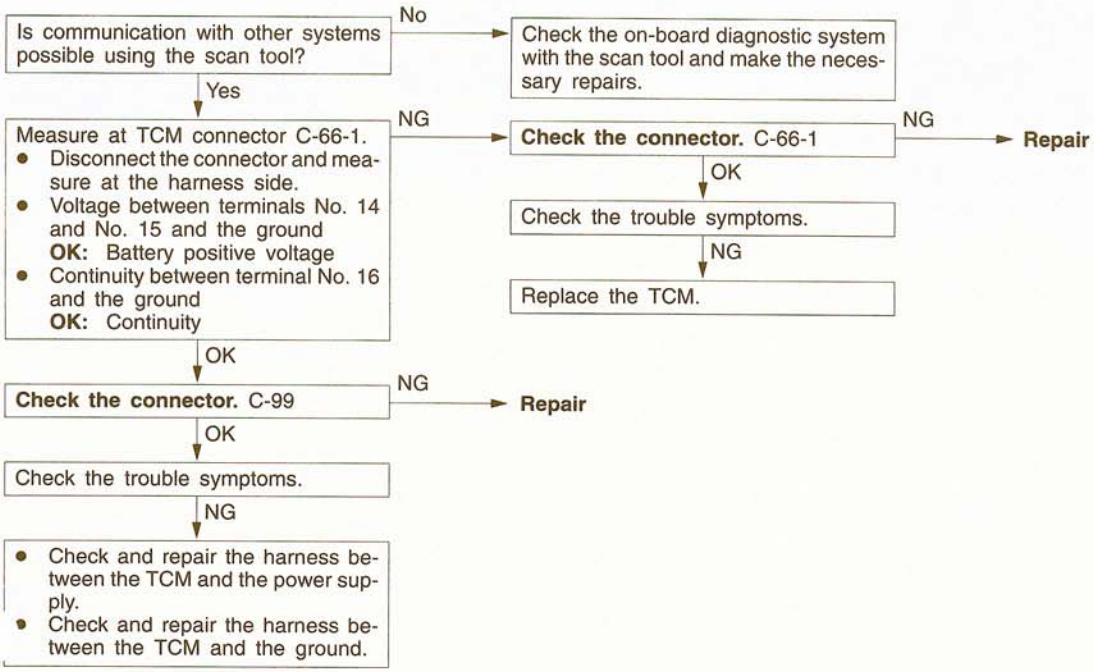

## INSPECTION PROCEDURE 2

| • Does not move forward or reverse | Probable cause |
|---|---|
| [Comment]<br>When the engine is idling, the vehicle does not move forward or back even if the selector lever is shifted from N to D, 2, L or R. In such cases, the cause is probably abnormal line pressure or a malfunction of the torque converter, oil pump, parking mechanism or the power train. | • Abnormal line pressure<br>• Malfunction of power train<br>• Malfunction of oil pump<br>• Malfunction of valve body<br>• Malfunction of parking mechanism<br>• Malfunction of torque converter |

★ : Refer to Transmission Overhaul.

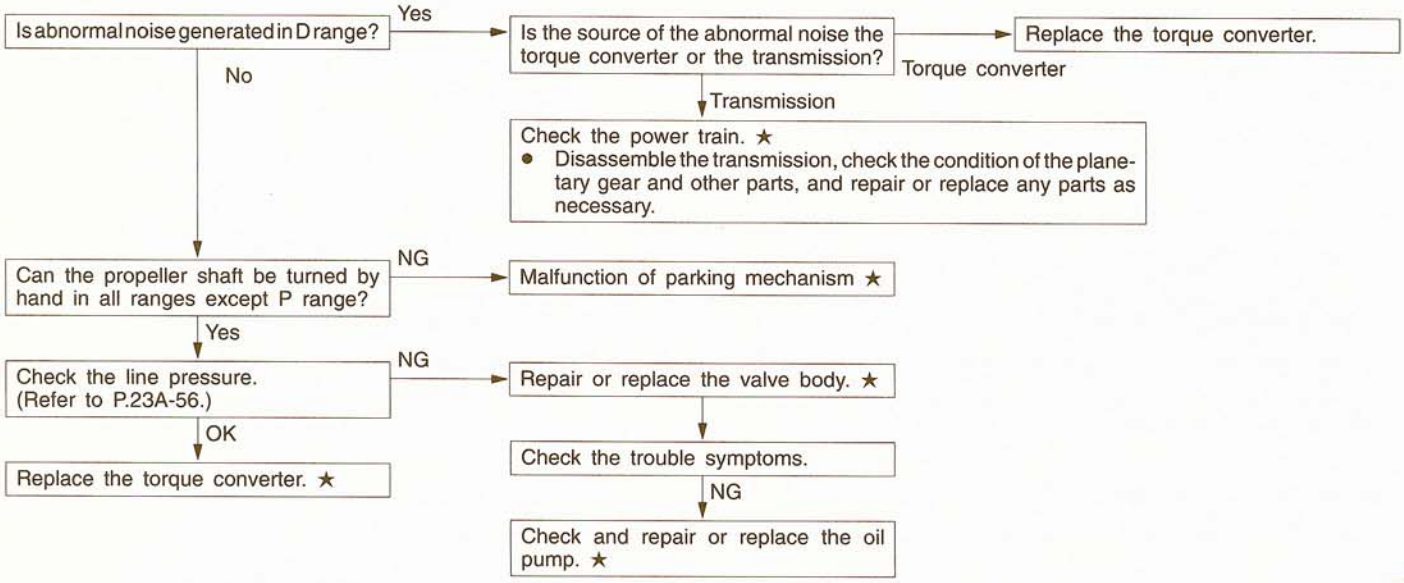


## INSPECTION PROCEDURE 3

| • Does not move forward only | Probable cause |
|---|---|
| [Comment]<br>When the engine is idling, the vehicle does not move forward even if the selector lever is shifted from N to D, 2 or L. In such cases, the cause is probably a malfunction of the clutch or brake. | • Malfunction of forward clutch<br>• Malfunction of direct clutch<br>• Malfunction of one-way clutch No. 2<br>• Malfunction of 2nd-coast brake<br>• Malfunction of 2nd brake<br>• Malfunction of 1st & reverse brake |

★ : Refer to Transmission Overhaul.

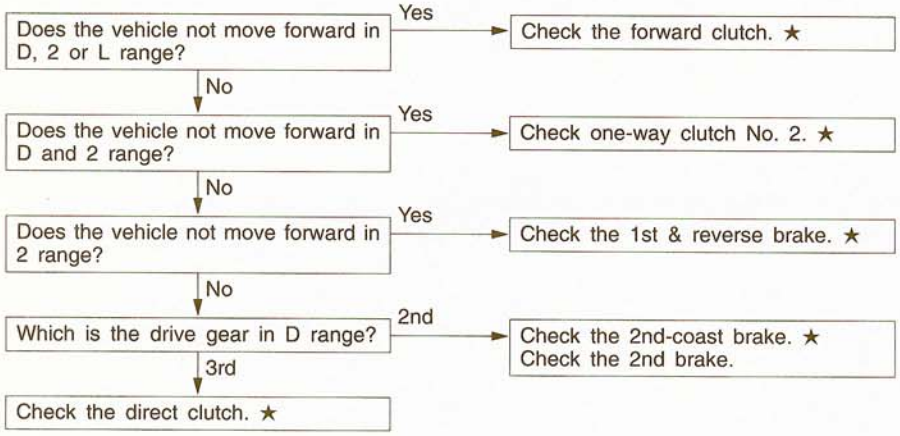


**TSB Revision**

## INSPECTION PROCEDURE 4

| • Does not reverse only | Probable cause |
|---|---|
| [Comment]<br>When the engine is idling, the vehicle does not reverse even if the selector lever is shifted from N to R. In such cases, the cause is probably a malfunction of a clutch, brake or the valve body. | • Malfunction of 2nd-coast brake<br>• Malfunction of direct clutch<br>• Malfunction of 1st & reverse brake<br>• Malfunction of valve body<br>• Malfunction of planetary gear |

★ : Refer to Transmission Overhaul.

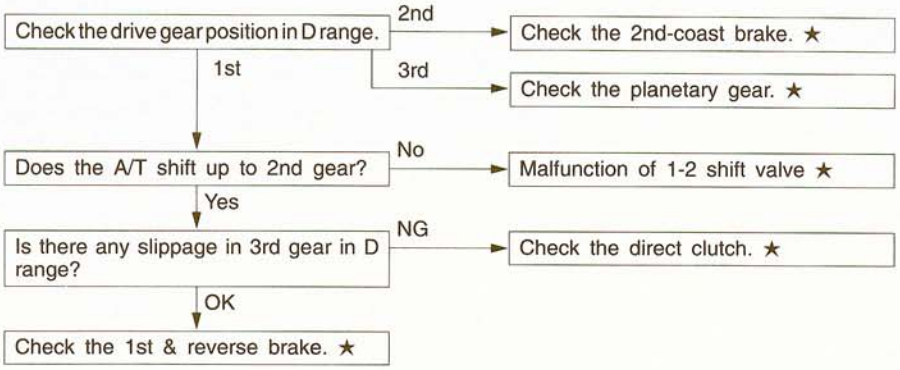


## INSPECTION PROCEDURE 5

| • Upshifting does not occur | Probable cause |
|---|---|
| [Comment]<br>Upshifting does not occur under conditions when upshifting should occur. Check shifting from 1st to 2nd, 2nd to 3rd and 3rd to 4th respectively. | • Shift solenoid<br>• TCM<br>• Power train internal parts |

★ : Refer to Transmission Overhaul.

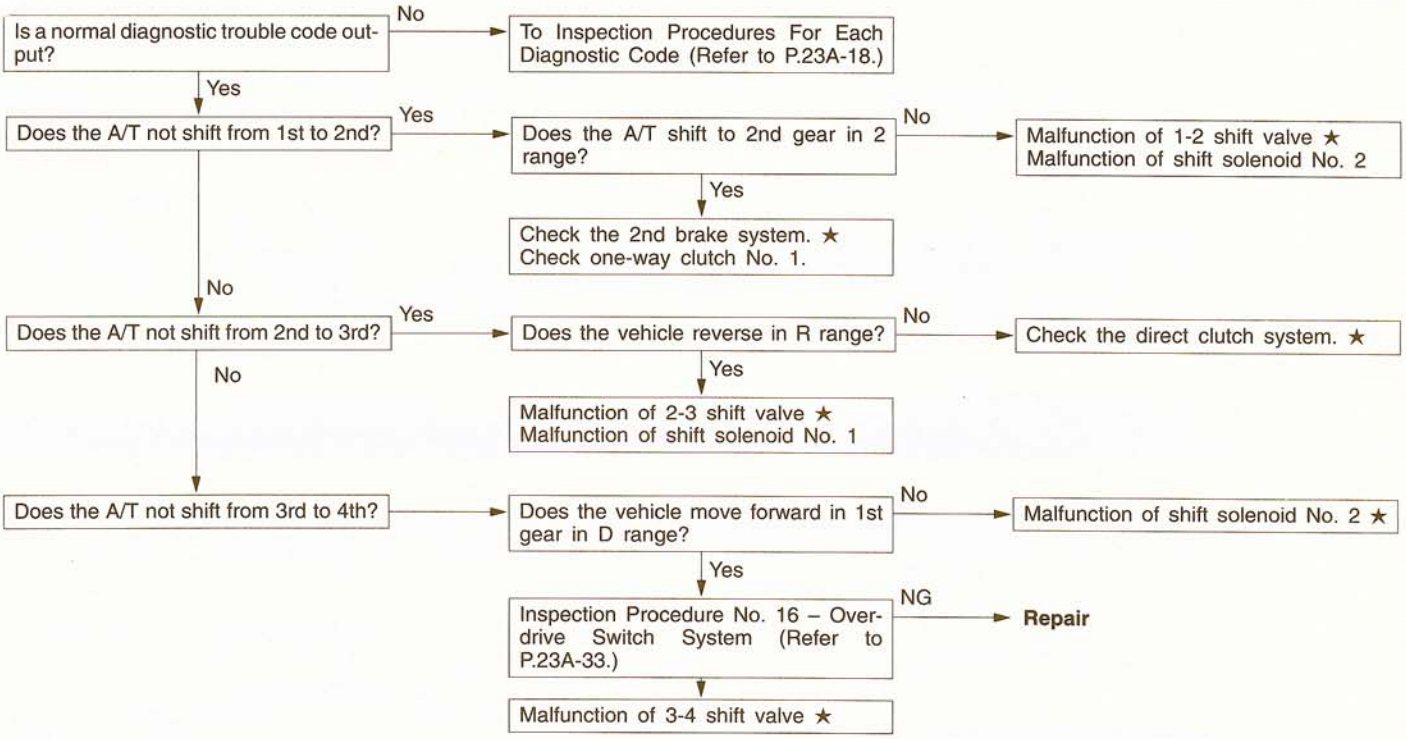


**TSB Revision**

## INSPECTION PROCEDURE 6

| • Downshifting does not occur | Probable cause |
|---|---|
| [Comment]<br>Downshifting does not occur under conditions when downshifting should occur. Check shifting from 2nd to 1st, 3rd to 2nd and 4th to 3rd respectively. | • Shift solenoid<br>• TCM<br>• Power train internal parts |

★ : Refer to Transmission Overhaul.

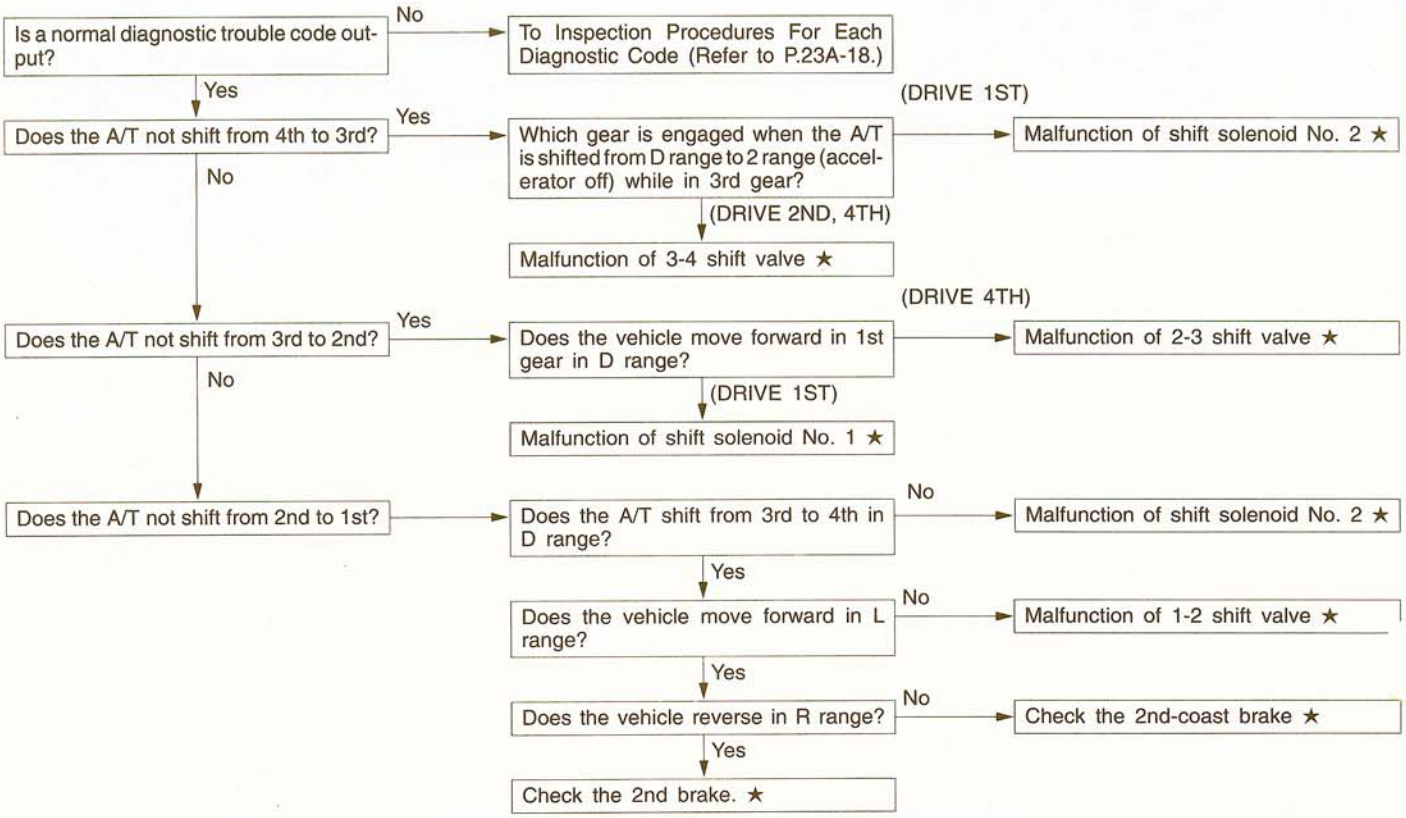


**TSB Revision**

## INSPECTION PROCEDURE 7

| • Shifting point abnormality | Probable cause |
|---|---|
| [Comment]<br>Shifting occurs at points which are different from the shift pattern. Note that the shift pattern will vary in different modes and at high oil temperatures. | • Throttle (lever) position sensor<br>• Vehicle speed sensor (Main)<br>• Oil temperature sensor<br>• Pattern select switch<br>• Engine coolant temperature switch<br>• TCM |

Is a normal diagnostic trouble code output?
- No → To Inspection Procedures For Each Diagnostic Trouble Code (Refer to P.23A-18.)
- Yes ↓

**MUT-II SERVICE DATA**
- 36 – Pattern select switch
  **OK:** Scan tool display and mode selected should match

- NG → Inspection Procedure No. 15 – Pattern select switch system (Refer to P.23A-33.)
- OK ↓

**MUT-II SERVICE DATA**
- 15 – Oil temperature sensor
  **OK:** 70–100°C(158–212°F)after engine has warmed up

- NG → Inspection Procedure No. 19 – Oil temperature sensor system (Refer to P.23A-35.)
- OK ↓

**MUT-II SERVICE DATA**
- 29 – Engine coolant temperature switch
  **OK:** Off when engine is cold and ON after engine has warmed up

- NG → Inspection Procedure No. 18 – Engine coolant temperature switch system (Refer to P.23A-34.)
- OK ↓

Replace the TCM.

## INSPECTION PROCEDURE 8

| • Upshifting occurs spontaneously | Probable cause |
|---|---|
| [Comment]<br>Upshifting occurs in ranges where upshifting should not occur, such as when in 2nd gear in L range, 3rd gear in 2 range or 4th gear in D range when the O.D. switch is off. | • Park/neutral position switch<br>• Overdrive switch<br>• TCM |

**MUT-II SERVICE DATA**
- 37 – Park/neutral position switch
  **OK:** Scan tool display and selector lever position should match

- NG → Inspection Procedure No. 14 – Park/neutral position switch system (Refer to P.23A-32.)
- OK ↓

**MUT-II SERVICE DATA**
- 35 – Overdrive switch
  **OK:** Scan tool display and mode selected should match

- NG → Inspection Procedure No. 16 – Overdrive switch system (Refer to P.23A-33.)
- OK ↓

Replace the TCM.

## INSPECTION PROCEDURE 9

| • Incorrect drive gear position | Probable cause |
|---|---|
| [Comment]<br>Vehicle starts off in 2nd, 3rd or 4th gear when in D range. Often occurs when starting off is not smooth. | • Park/neutral position switch<br>• Pattern select switch<br>• Direct clutch<br>• Planetary gear<br>• Valve body |

★ : Refer to Transmission Overhaul.

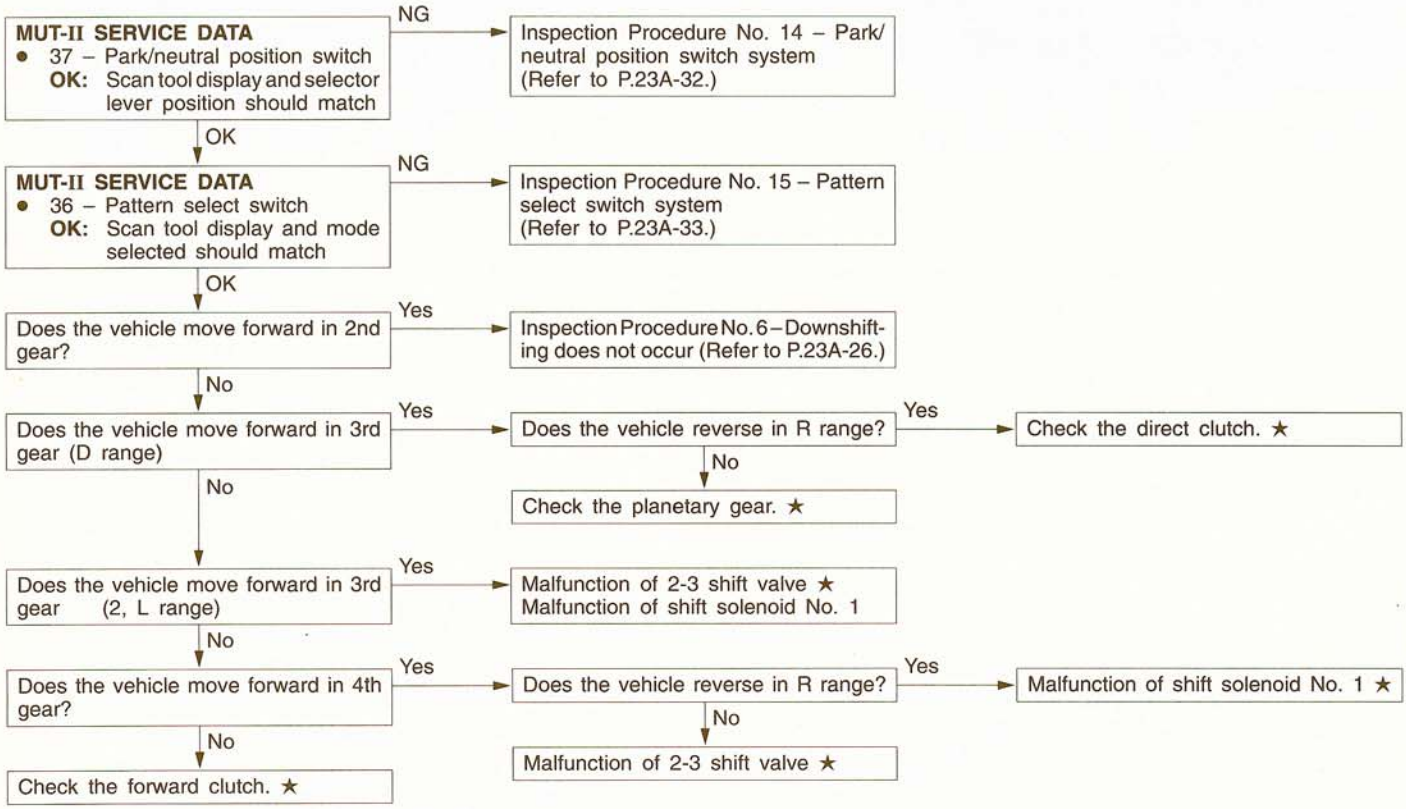


TSB Revision 97-23-001

## INSPECTION PROCEDURE 10

| • Large shocks | Probable cause |
|---|---|
| Comment]<br>Shocks accompany shifting from N to D, N to R and during each upshift and downshift. | • Direct clutch<br>• 1st & reverse brake<br>• Stop lamp switch<br>• Park/neutral position switch<br>• Forward clutch<br>• Valve body |

★ : Refer to Transmission Overhaul.

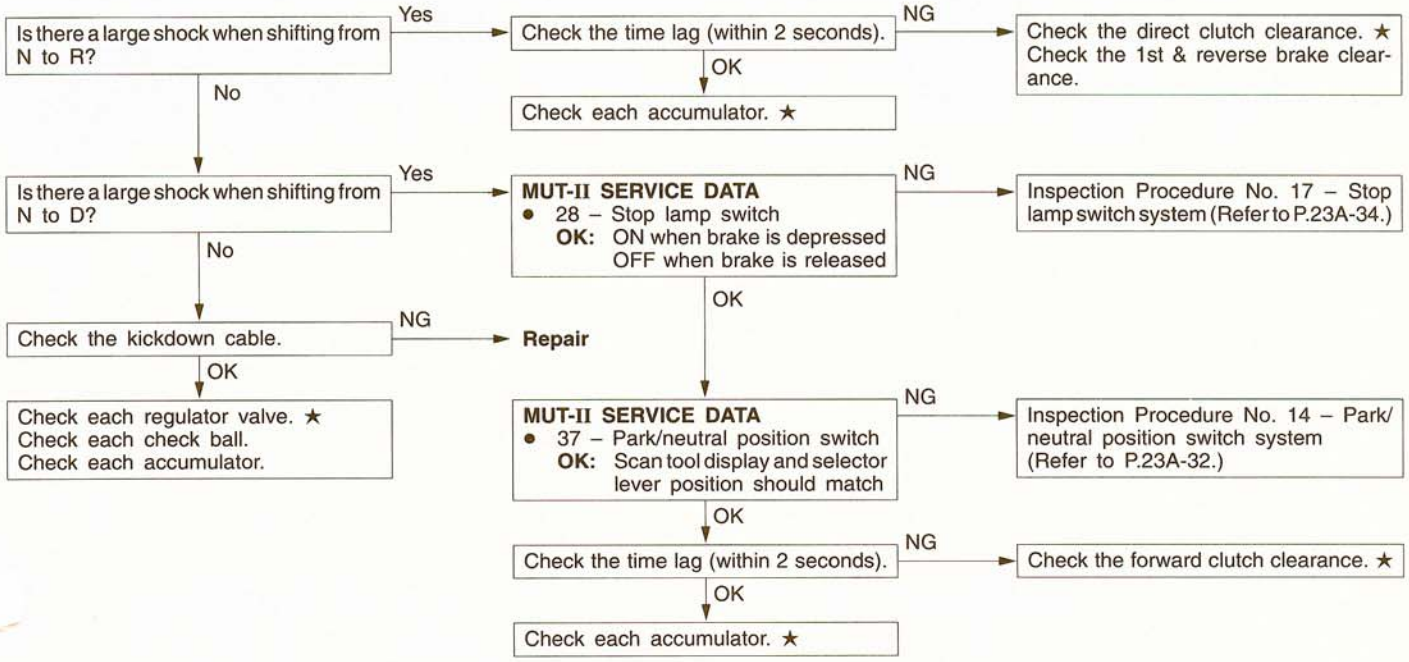

## INSPECTION PROCEDURE 11

| • Slippage (vibration) | Probable cause |
|---|---|
| [Comment]<br>Occurs when a clutch or brake does not fully engage due to low hydraulic pressure or a worn facing. Appears as vibration when the problem is slight. | • Torque converter<br>• Direct clutch<br>• Forward clutch<br>• 2nd-coast brake<br>• 2nd brake<br>• Overdrive brake |

★ : Refer to Transmission Overhaul.

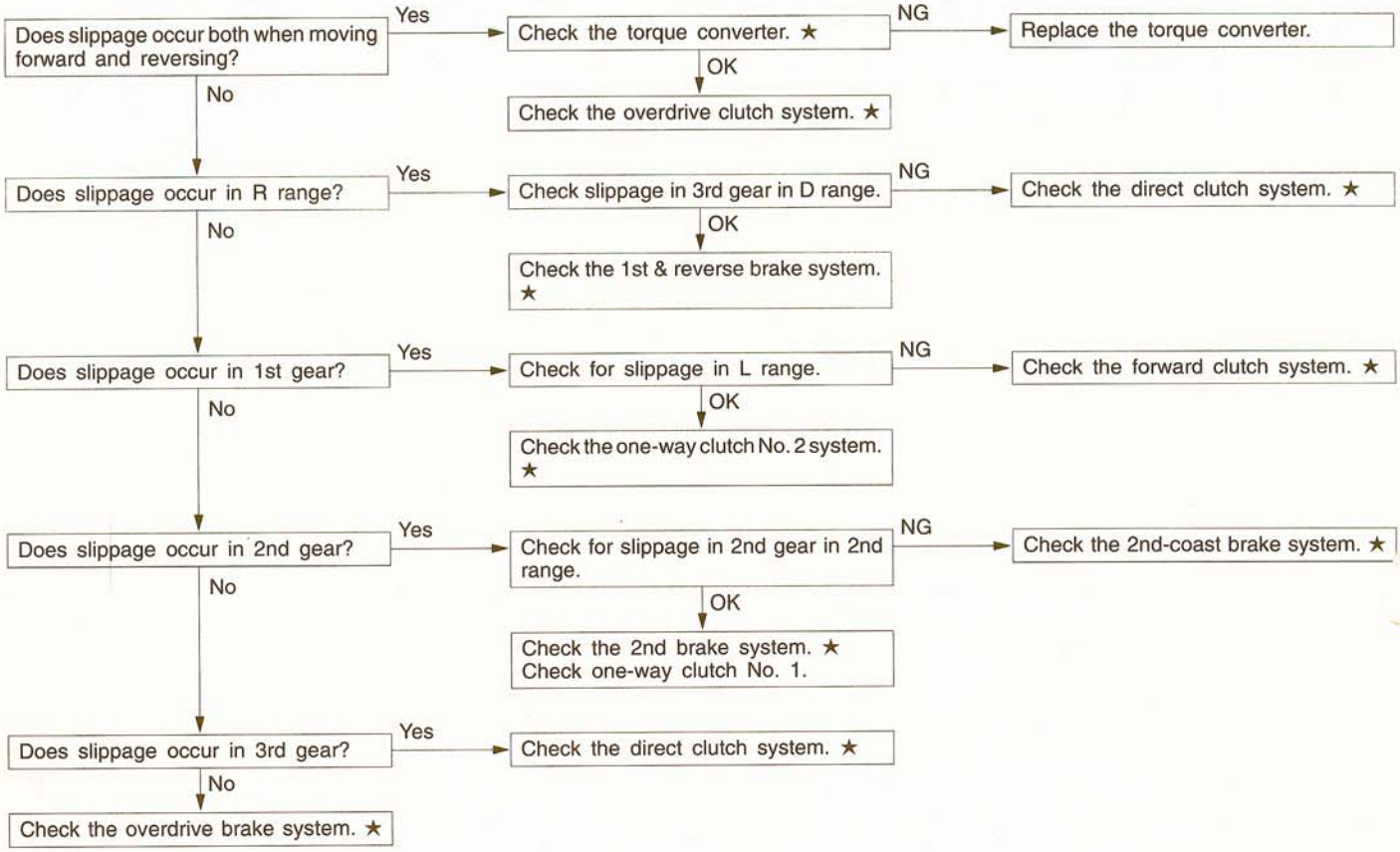


**TSB Revision**

## INSPECTION PROCEDURE 12

| • Malfunction of lock-up | Probable cause |
|---|---|
| [Comment]<br>When lock-up does not operate even though in the lock-up range, and also when lock-up is operating and the engine is idling but then stalls. | • Torque converter<br>• Valve body<br>• Oil temperature sensor<br>• Engine coolant temperature switch |

★ : Refer to Transmission Overhaul.

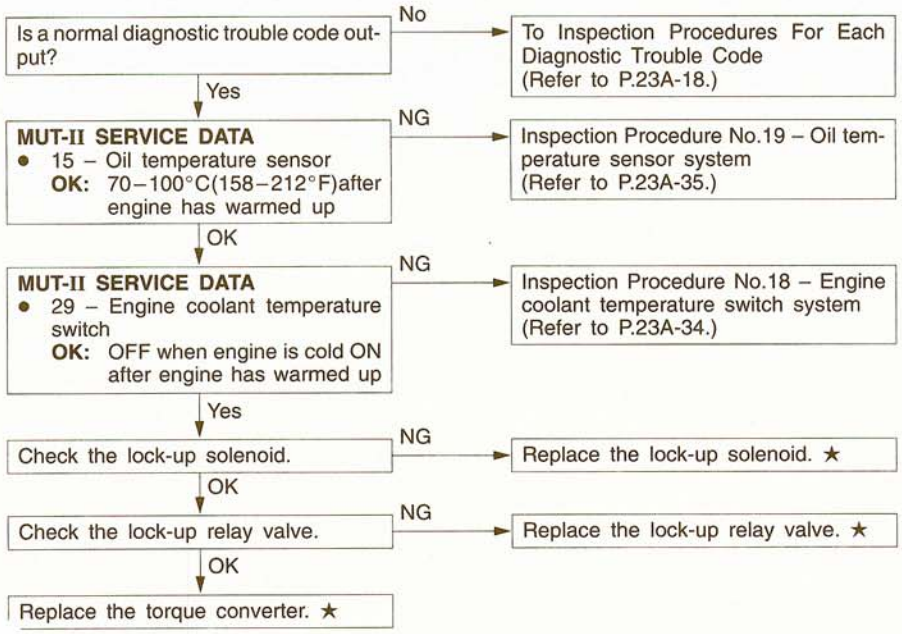


## INSPECTION PROCEDURE 13

| • Abnormal engine braking | Probable cause |
|---|---|
| [Comment]<br>Engine braking effectiveness is poor after downshifting has occurred. | • Overdrive clutch<br>• 1st & reverse brake<br>• 2nd-coast brake<br>• Valve body |

★ : Refer to Transmission Overhaul.

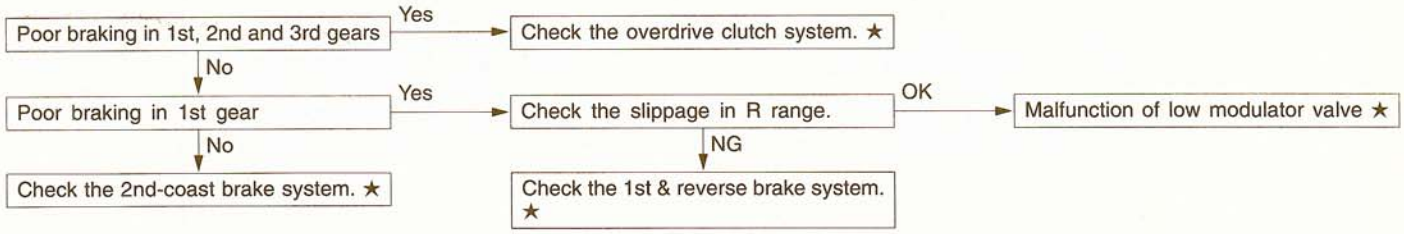

## INSPECTION PROCEDURE 14

| • Park/neutral position switch system | Probable cause |
|---|---|
| [Comment]<br>When up shifting to 4th gear does not occur if in D range (OD switch: ON), when lock-up does not operate even though in the lock-up range, and if the engine does not start in P or N range, the cause is probably a problem in the park/neutral position switch system. | • Malfunction of park/neutral position switch<br>• Malfunction of connector<br>• Malfunction of TCM |

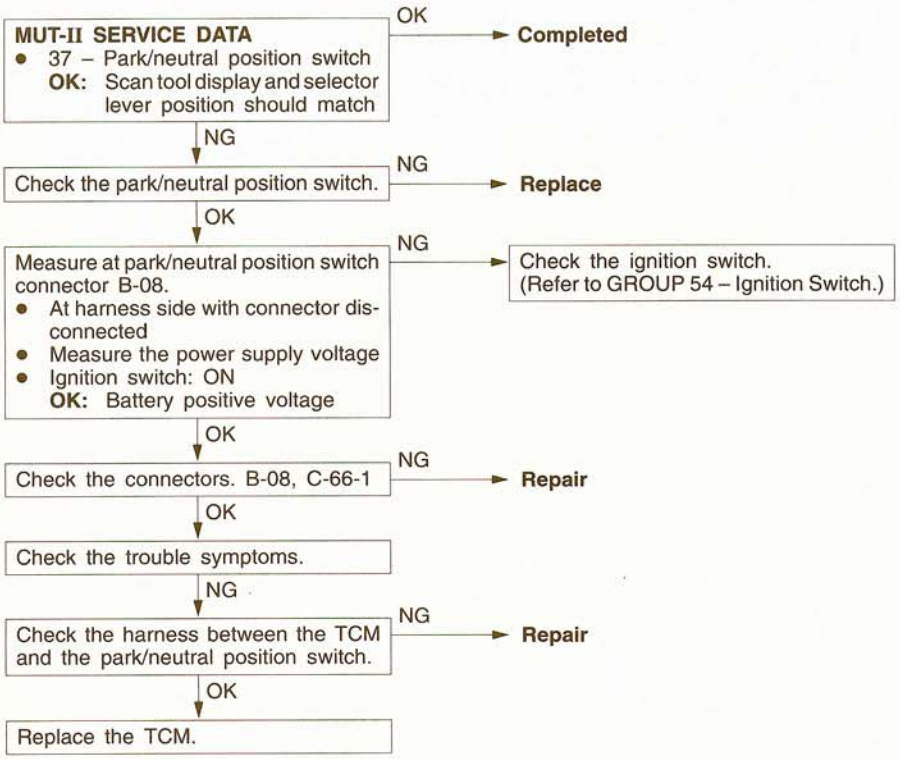

## INSPECTION PROCEDURE 15

| • Pattern select switch system | Probable cause |
|---|---|
| [Comment]<br>If the shift pattern does not change when the pattern select switch is operated, the cause is probably a malfunction of the pattern select switch. | • Malfunction of pattern select switch<br>• Malfunction of connector<br>• Malfunction of TCM |

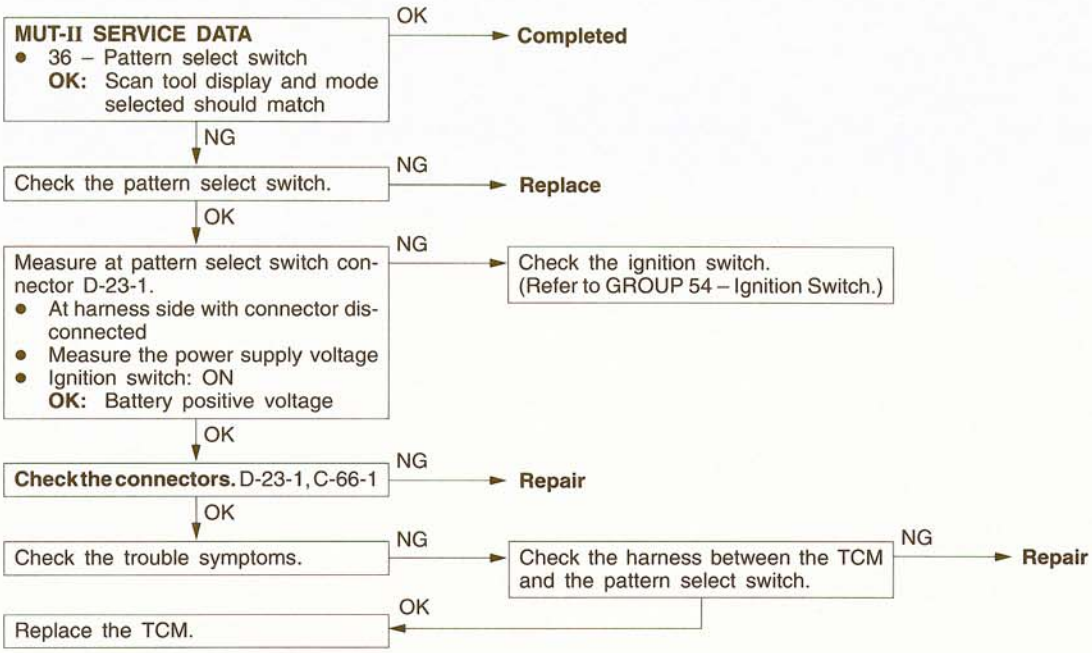


## 'NSPECTION PROCEDURE 16

| • Overdrive switch system | Probable cause |
|---|---|
| [Comment]<br>If downshifting does not occur when overdrive is turned off while driving in 4th gear, or if shifting to 4th gear is not possible, the cause is probably a problem in the overdrive switch system. | • Malfunction of overdrive switch<br>• Malfunction of connector<br>• Malfunction of TCM |

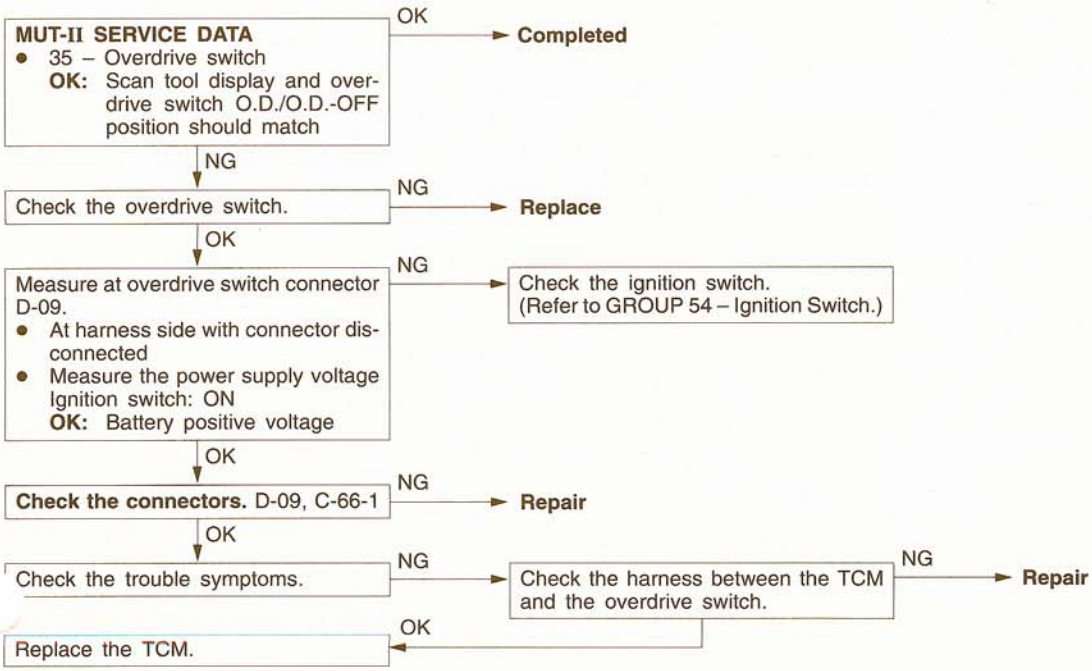


TSB Revision 97-23-001

## INSPECTION PROCEDURE 17

| • Stop lamp switch system | Probable cause |
|---|---|
| [Comment]<br>If large shocks occur during squat control, the cause is probably a problem with the stop lamp switch. | • Malfunction of stop lamp switch<br>• Malfunction of connector<br>• Malfunction of TCM |

**MUT-II SERVICE DATA**
- 28 – Stop lamp switch
  **OK:** On when the brake is depressed and off when the brake is released

No → Check the stop lamp switch. (Refer to GROUP 35A – Brake Pedal.)

Yes ↓

**Check the connectors.** C-62-3, C-66-1 — NG → **Repair**

OK ↓

Check the harness between the TCM and the stop lamp switch. — NG → **Repair**

OK ↓

Check the trouble symptoms.

NG ↓

Replace the TCM.

## INSPECTION PROCEDURE 18

| • Engine coolant temperature switch system | Probable cause |
|---|---|
| [Comment]<br>If there is insufficient output while the engine is cold, the cause is probably a malfunction of the engine coolant temperature switch. | • Malfunction of engine coolant temperature switch<br>• Malfunction of connector<br>• Malfunction of TCM |

**MUT-II SERVICE DATA**
- 29 – Engine coolant temperature switch
  **OK:** Off when engine is cold and ON after engine has warmed up

OK → **Completed**

NG ↓

Check the engine coolant temperature switch. (Refer to P.23A-52.) — NG → **Replace**

OK ↓

Measure at engine coolant temperature switch connector A-61.
- At harness side with connector disconnected
- Voltage between terminal No. 1 and ground (IG : ON)
  **OK:** Battery positive voltage

NG → **Check the connector.** C-66-1 — NG → **Repair**

OK ↓

Check the trouble symptoms.

NG ↓

Check the harness between the TCM and the engine coolant temperature switch. — NG → **Repair**

OK ↓

Replace the TCM.

OK ↓

**Check the connectors.** A-61, C-66-1

OK ↓

Check the trouble symptoms.

NG ↓

Check and repair the harness between the TCM and the engine coolant temperature switch.

**TSB Revision** 97-23-001

## INSPECTION PROCEDURE 19

| ● Oil temperature sensor system | Probable cause |
|---|---|
| Comment]<br>If the oil temperature warning lamp remains illuminated, the cause is probably a problem with the oil temperature sensor. | ● Malfunction of oil temperature sensor<br>● Malfunction of connector<br>● Malfunction of TCM |

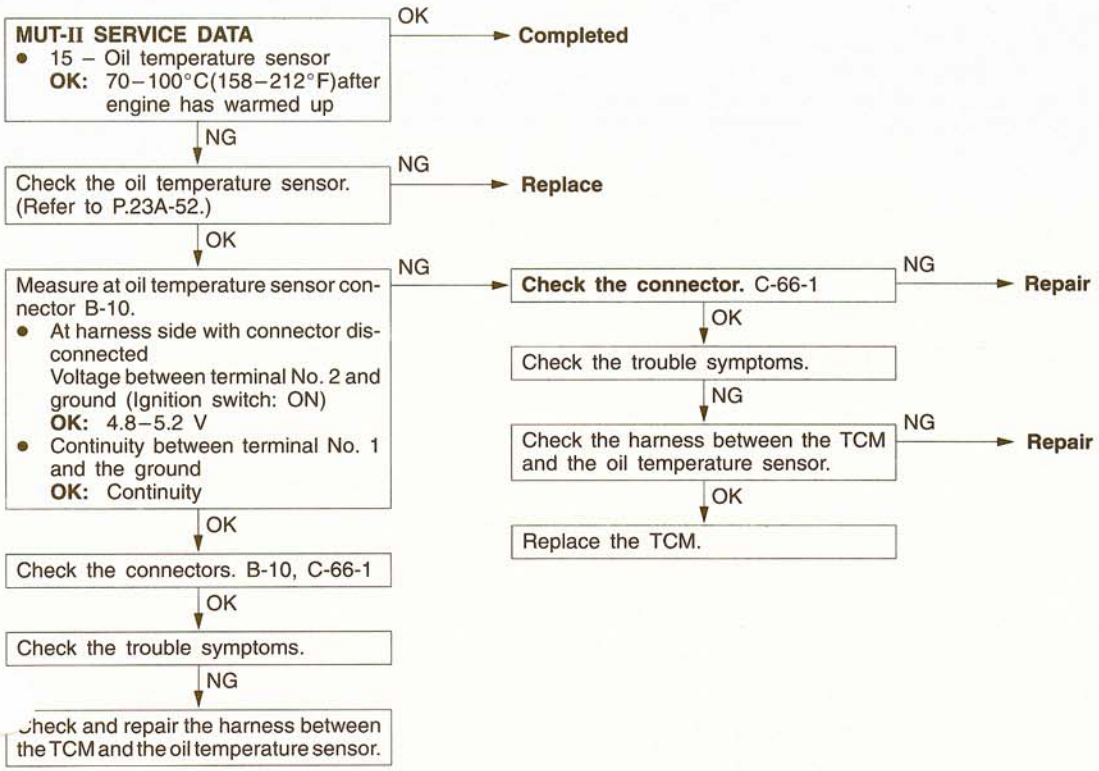

## SERVICE DATA REFERENCE TABLE

23100810062

| Item No. | Inspection item | Inspection conditions | | Normal value |
|---|---|---|---|---|
| 11 | Throttle position sensor | Accelerator pedal position<br>Engine: Idling<br>Selector lever position: N | Fully closed | 0–5% |
| | | | Depressed | Gradually rises from the above value |
| | | | Fully open (up to 2 seconds) | 85–100% |
| 15 | Oil temperature sensor | Warming up | Drive for 15 minutes or more so that the ATF temperature becomes 70–90°C (158–194°F). | Gradually rises to 70–90°C (158–194°F) |
| 27 | Shift position signal | Accelerator pedal position<br>Engine: Idling<br>(Vehicle stopped)<br>Selector lever position: D<br>Mode selection: Normal | Fully closed | 1st |
| | | | N to D shift | 1st to 3rd to 1st |
| | | Selector lever position: L<br>Mode selection: Normal | Idling (Vehicle stopped) | 1st |
| | | Selector lever position: 2<br>Mode selection: Normal | Idling (Vehicle stopped) | 1st |
| | | | Driving at 40 km/h (24 mph) (20 seconds or more) | 2 |
| 27 | Shift position signal | Selector lever position: D<br>Mode selection: Normal<br>Overdrive: OFF | Driving at a constant speed of 50 km/h (31 mph) (20 seconds or more) | 3rd |
| | | Selector lever position: D<br>Mode selection: Normal<br>Overdrive: ON | Driving at a constant speed of 50 km/h (31 mph) (20 seconds or more) | 4th |
| 28 | Stop lamp switch | Brake pedal position<br>Ignition switch: ON<br>Engine: Stopped | Depressed | ON |
| | | | Released | OFF |
| 29 | Engine coolant temperature switch | When engine changes from cold to warm | While engine is cold | OFF |
| | | | After engine has warmed up | ON |
| 32 | A/T speed sensor* | Selector lever position: D<br>Mode selection: Normal<br>Overdrive: ON | Driving at 30 km/h (19 mph) | 25–35 km/h (16–22 mph) |
| | | | Driving at 50 km/h (31 mph) | 42–58 km/h (26–36 mph) |
| 35 | Overdrive switch | Ignition switch: ON<br>Engine: Stopped | Overdrive switch: ON | O.D. |
| | | | Overdrive: OFF | O.D.–OFF |

* Transfer lever position: 4H Range

TSB Revision 97-23-001

| Item No. | Inspection item | Inspection conditions | | Normal value |
|---|---|---|---|---|
| 36 | Pattern select switch | Ignition switch: ON<br>Engine: Stopped | Pattern select switch Power mode | Power |
| | | | Pattern select switch Hold mode | Hold |
| | | | Pattern select switch Normal mode | Normal |
| 37 | Park/neutral position switch | Ignition switch: ON<br>Engine: Stopped | Selector lever position: P<br>Selector lever position: R<br>Selector lever position: N<br>Selector lever position: D<br>Selector lever position: 2<br>Selector lever position: L | P, R, D<br>P, R, D<br>N<br>P, R, D<br>2<br>L |
| 39 | Cruise control-ECM | Selector lever position: D<br>Mode selection: Normal | Auto-cruise control OFF | OFF |
| | | | Auto-cruise control ON [climbing at 50 km/h (31 mph)] | ON |
| 41 | Shift solenoid No. 1 | Selector lever position: D<br>Mode selection: Normal | Driving at 10 km/h (6 mph) (Drive 1st) | ON |
| | | | Driving at 50 km/h (31 mph) (Drive 4th) | OFF |
| 43 | Shift solenoid No. 2 | Selector lever position: D<br>Mode selection: Normal<br>Overdrive: OFF | Driving at 10 km/h (6 mph) (Drive 1st) | OFF |
| | | | Driving at 50 km/h (31 mph) (Drive 3rd) | ON |
| 47 | Lock-up solenoid | Selector lever position: D<br>Mode selection: Normal<br>Overdrive: ON | Driving at 10 km/h (6 mph) (Drive 1st) | OFF |
| | | | Driving at 50 km/h (31 mph) (Drive 4th) | ON |

## REFERENCE FOR FAIL-SAFE/BACKUP FUNCTIONS

23100830051

When malfunctions of the main sensors or actuators are detected by the on-board diagnostic, the vehicle is controlled by means of the pre-set control logic to maintain safe conditions for driving.

| Malfunctioning item | Control contents during malfunction |
|---|---|
| A/T speed sensor | When there is an open circuit in the A/T speed sensor, vehicle speed detection is switched to the output from the vehicle speed sensor in the speedometer to maintain vehicle control. |
| Park/neutral position switch | If there is an open circuit in the N, 2 or L signal line, driving is possible in the case of 2 and L (same as D range) so that control can be performed as if the range is D range, and driving is not possible in N range. If more than one of the 2, L or N signals are input, the order of priority for control is L to 2 to N. |
| Throttle position sensor | If the output is 0.09 V or less or 4.95 V or more, the throttle is fully closed and gear shifting control is carried out. |
| Lock-up solenoid | If a problem is detected, lock-up is stopped over the whole range and the solenoid is turned off to prevent the engine from stalling during idling. |
| Shift solenoid Nos. 1 and 2 | If a problem is detected, each solenoid stops operating and is turned off. The gear shifting logic when a problem is detected is given in the table below. |

| Selector lever position | Normal | | | If there is a malfunction of solenoid No. 1 | | | If there is a malfunction of solenoid No. 2 | | | If there is a malfunction of solenoid Nos. 1 and 2 | | |
|---|---|---|---|---|---|---|---|---|---|---|---|---|
| | Gear | S1 | S2 | Gear | S1 | S2 | Gear | S1 | S2 | Gear | S1 | S2 |
| D | 1 | ○ | × | 3 | | ×→○ | 1 | ○ | | O/D | | |
| | 2 | ○ | ○ | 3 | | ○ | O/D | ○→× | | O/D | | |
| | 3 | × | ○ | 3 | | ○ | O/D | × | | O/D | | |
| | O/D | × | × | O/D | | × | O/D | × | | O/D | | |
| 2 | 1 | ○ | × | 3 | | ×→○ | 1 | ○ | | 3 | | |
| | 2 | ○ | ○ | 3 | | ○ | 3 | ○→× | | 3 | | |
| | 3 | × | ○ | 3 | | ○ | 3 | × | | 3 | | |
| L | 1 | ○ | × | 1 | | × | 1 | ○ | | 1 | | |
| | 2 | ○ | ○ | 2 | | ○ | 1 | ○ | | 1 | | |

○: Energized (ON)
×: Not energized (OFF)

## A/T-ECM TERMINAL VOLTAGE REFERENCE CHART

23100840078

| Terminal No. | Inspection item | Inspection conditions | Standard value |
|---|---|---|---|
| 1 | Shift solenoid No. 1 | When in 1st or 2nd gear | System voltage |
| | | When in 3rd or 4th gear | 0 V |
| 2 | Shift solenoid No. 2 | When in 2nd or 3rd gear | System voltage |
| | | When in 1st or 4th gear | 0 V |
| 3 | Lock-up solenoid | When lock-up clutch is operating | System voltage |
| | | When lock-up clutch is not operating | 0 V |
| 4 | A/T speed sensor ground side | Ignition switch: OFF | 0 V |
| | | Ignition switch: ON | 2.5 V |
| 5 | Park/neutral position switch (N) | Selector lever position: N | System voltage |
| | | Selector lever position: Other than N | 0 V |
| 6 | Diagnostic output terminal | When scan tool is not connected | System voltage |
| 7 | HOLD mode signal | When HOLD mode is selected | System voltage |
| | | When a mode other than HOLD mode is selected | 0 V |
| 8 | Overdrive switch | Overdrive switch: ON (O.D.) | 0 V |
| | | Overdrive switch: OFF (O.D.–OFF) | System voltage |
| 9 | Vehicle speed sensor (Sub) | Vehicle: Slowly moving forward | Alternates between 0 ↔ approx. 5 V |
| 10 | A/T speed sensor output side | Vehicle: Stopped | Approx. 2.5 V |
| | | Vehicle: Moving forward | Other than 2.5 V |
| 11 | Cruise control signal | When cruise control is requested | 0 V |
| | | When cruise control is not requested | System voltage |
| 12 | Oil temperature sensor | ATF temperature: 120°C (248°F) | Approx. 1.9 V |
| | | ATF temperature: 150°C (302°F) | Approx. 1.1 V |
| 13 | Diagnostic test mode control terminal | — | — |
| 14 | Power supply | Ignition switch: ON | System voltage |
| | | Ignition switch: OFF | 0 V |
| 15 | Backup power supply | Ignition switch: OFF | System voltage |
| 16 | Ground | Engine: Idling | 0 V |
| 17 | Stop lamp switch | When brake pedal is depressed | 0 V |
| | | When brake pedal is released | System voltage |

| Terminal No. | Inspection item | Inspection conditions | Standard value |
|---|---|---|---|
| 18 | Park/neutral position switch (2) | Selector lever position: 2 | System voltage |
| | | Selector lever position: Other than 2 | 0 V |
| 19 | Park/neutral position switch (L) | Selector lever position: L | System voltage |
| | | Selector lever position: Other than L | 0 V |
| 20 | Oil temperature warning lamp | When normal | 0 V |
| | | Ignition switch: For 5 seconds after turning ON | System voltage |
| 21 | Power mode signal | When POWER mode is selected | System voltage |
| | | When a mode other than POWER mode is selected | 0 V |
| 22 | — | — | — |
| 23 | — | — | — |
| 24 | Engine coolant temperature signal | When engine coolant temperature is 30°C (86°F) | System voltage |
| | | When engine coolant temperature is 80°C (176°F) | 0 V |
| 25 | — | — | — |
| 26 | Throttle position sensor | Accelerator pedal: Fully closed | 0.3–1.0 V |
| | | Accelerator pedal: Fully open | 4.4–5.0 V |

# ON-VEHICLE SERVICE

23100090077

## AUTOMATIC TRANSMISSION FLUID CHECK

Refer to GROUP 00 – Maintenance Service.

## AUTOMATIC TRANSMISSION FLUID REPLACEMENT

23100100091

Refer to GROUP 00 – Maintenance Service.

## TRANSFER OIL CHECK

23100110056

Refer to GROUP 00 – Maintenance Service.

## TRANSFER OIL REPLACEMENT

23100120059

Refer to GROUP 00 – Maintenance Service.

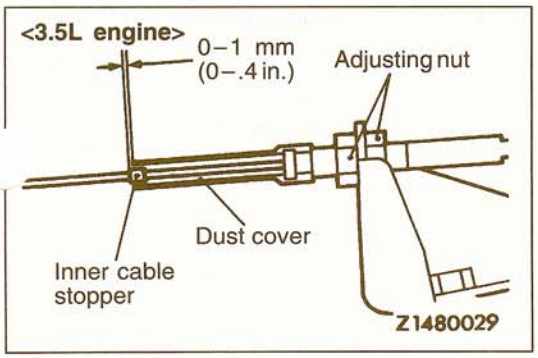


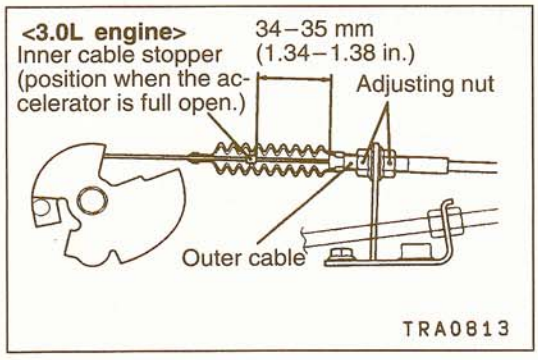


## THROTTLE CABLE CHECK AND ADJUSTMENT

23100280023

**<3.5L engine>**

(1) Check for defective or bent throttle lever or throttle cable bracket.
(2) With the accelerator depressed, check that the distance between the inner cable stopper and dust cover surface is within the standard value.

**Standard value: 0–1 mm (0–.4 in.)**

(3) If the distance is outside the standard value, adjust using the adjusting nut.

**<3.0L engine>**

(1) Make sure that the throttle lever and the bracket have no transformations.
(2) Remove the boot at the outer cable so that the inner cable stopper can be seen.
(3) Measure the dimension between the end of the inner cable stopper and that of the outer cable with throttle lever full open.

**Standard value: 34–35 mm (1.34–1.38 in.)**

(4) If the distance is outside the standard value, adjust using the adjusting nut.

## THROTTLE CABLE STOPPER ADJUSTMENT

23101040019

When replacing the old throttle cable with a new one, th throttle cable stopper will not be secured, and so you v need to secure it by the following procedure.

(1) Install the new throttle cable to the automatic transmission assembly so that it is routed correctly, and then secure it. (However, it should not be connected to the throttle body yet.)
(2) Remove the dust cover from the outer cable.
(3) Gently pull the inner cable with a force of approximately 2 N (.44 lbs.) to remove any slack from the cable.
(4) While pulling the cable, move the stopper until it is at the position shown in the illustration, and then crimp it to secure it in that position.
(5) Place the dust cover back over the outer cable.
(6) Connect the inner cable to the throttle body, and the carry out throttle cable adjustment. (Refer to P.23-42.)

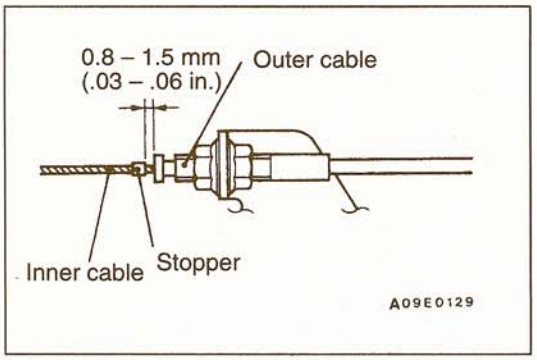


## CENTER DIFFERENTIAL LOCK DETECTION SWITCH CHECK

23100290019

Check for continuity between the brown connector terminal on the side of the transfer case and the transfer case.

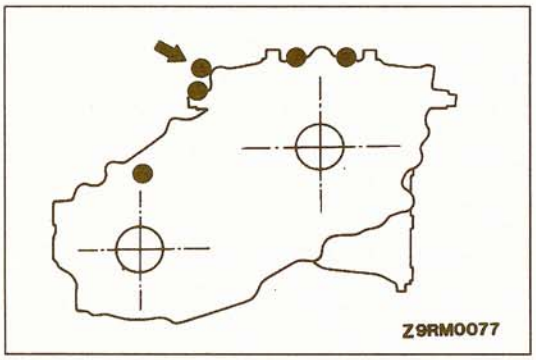


| Transfer control lever position | Continuity |
|---|---|
| 4H | No continuity |
| 4HLc | Continuity |

## 2WD/4WD DETECTION SWITCH CHECK

23100300019

Check for continuity between the black connector terminal on the side of the transfer case and the transfer case.

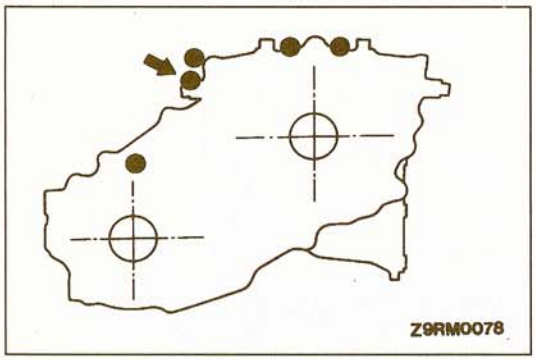


| Transfer control lever position | Continuity |
|---|---|
| 2H | Continuity |
| 4H | No continuity |

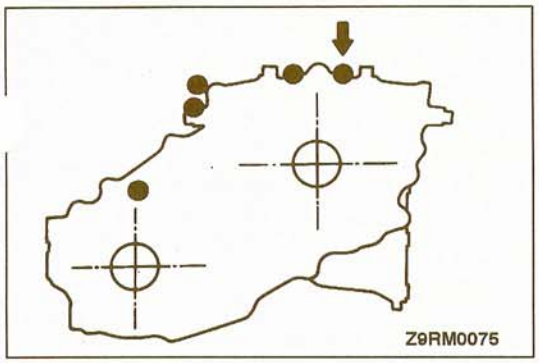


## CENTER DIFFERENTIAL LOCK OPERATION DETECTION SWITCH CHECK

23100310012

Check for continuity between the brown connector terminal on the top of the transfer case and the transfer case.

| Transfer control lever position | Continuity |
|---|---|
| 4H | No continuity |
| 4HLc | Continuity |

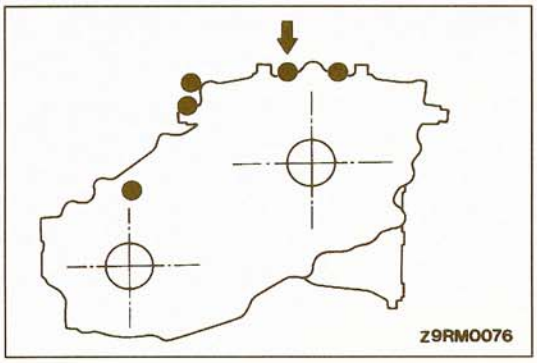


## 4WD OPERATION DETECTION SWITCH CHECK

23100320015

Check for continuity between the black connector terminal on the top of the transfer case and the transfer case.

| Transfer control lever position | Continuity |
|---|---|
| 2H | No continuity |
| 4H | Continuity |

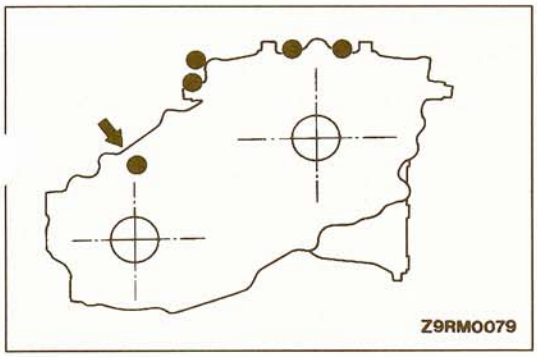


## HIGH RANGE/LOW RANGE DETECTION SWITCH CHECK

23100330018

Check for continuity between the white connector terminal on the side of the transfer case and the transfer case.

| Transfer control lever position | Continuity |
|---|---|
| 4HLc | Continuity |
| N (between 4HLc and 4LLc) | No continuity |
| 4LLc | Continuity |

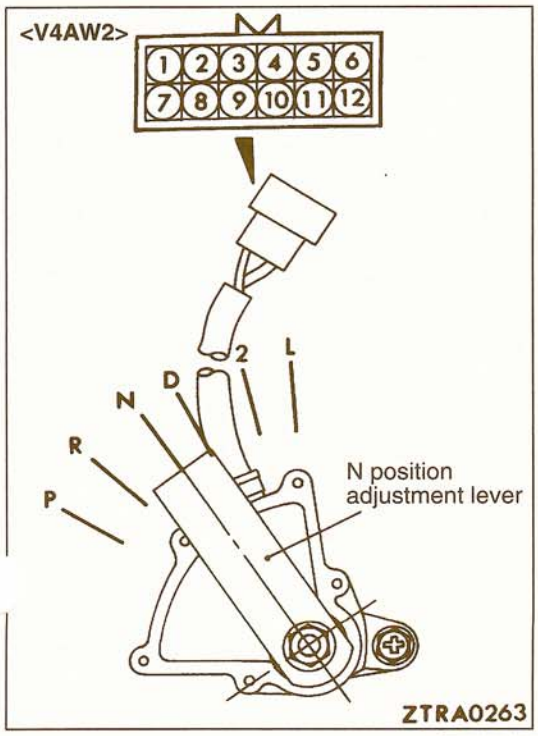


## PARK/NEUTRAL POSITION SWITCH CHECK

23100140116

**<V4AW2>**

| Item | Terminal No. | | | | | | | | |
|---|---|---|---|---|---|---|---|---|---|
| | 1 | 2 | 3 | 4 | 5 | 6 | 7 | 9 | 12 |
| P | | | | | | ○ | ○ | ○ | ○ |
| R | | | | | ○ | | | ○ | |
| N | | | | ○ | | | ○ | ○ | ○ |
| D | | | ○ | | | | | ○ | |
| 2 | ○ | | | | | | | ○ | |
| L | | ○ | | | | | | ○ | |

TSB Revision 97-23-001

<V4AW3>

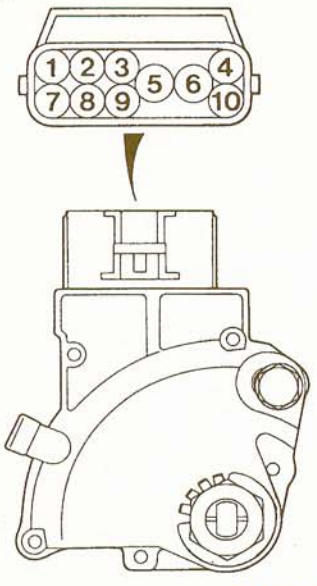


TRA0778

<V4AW3>

| Item | Terminal No. | | | | | | | | |
|---|---|---|---|---|---|---|---|---|---|
| | 1 | 2 | 3 | 5 | 6 | 7 | 8 | 9 | 10 |
| P | ○ | | | ○ | ○ | | | | ○ |
| R | ○ | | | | | | | ○ | |
| N | ○ | | | ○ | ○ | ○ | | | |
| D | ○ | | | | | | ○ | | |
| 2 | ○ | | ○ | | | | | | |
| L | ○ | ○ | | | | | | | |

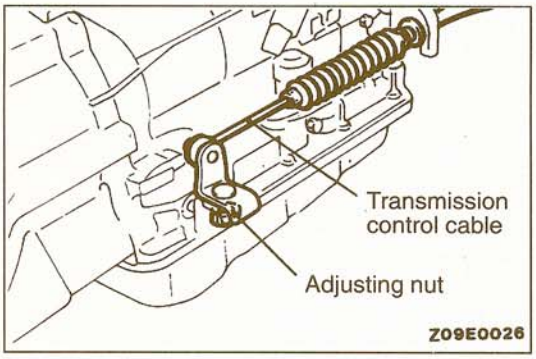


Z09E0026

## PARK/NEUTRAL POSITION SWITCH AND CONTROL CABLE ADJUSTMENT

23101030016

### PARK/NEUTRAL POSITION SWITCH

(1) Move the selector lever to the N position.
(2) Loosen the adjusting nut of the control cable.

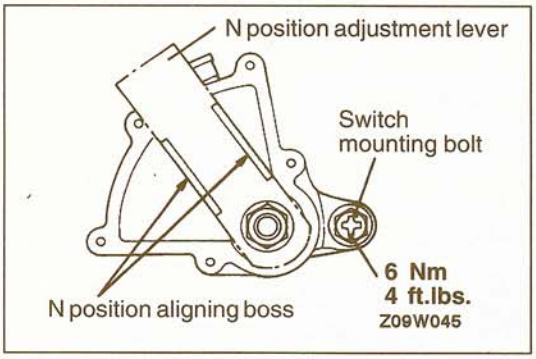


Z09W045

(3) Loosen the park/neutral position switch mounting bolt.
(4) Adjust by turning the park/neutral position switch so that the bosses for aligning the N position on the park/ neutral position switch are aligned with the N position adjustment lever.
(5) Tighten the park/neutral position switch mounting bolt to the specified torque.

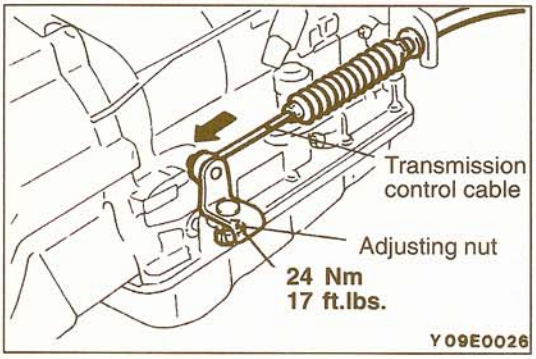


Y09E0026

(6) Gently pull the end of the transmission control cable in the direction of the arrow and tighten the adjusting nut to the specified torque.
(7) Check that the selector lever is in the N position.
(8) Check that each range on the transmission side operates and functions correctly for each position of the selector lever.

TSB Revision 98-23-012

### CONTROL CABLE

It is possible to confirm whether control cable is properly adjusted by checking whether the park/neutral position switch is performing well.

1. Apply the parking and service brakes fully.
2. Set the selector lever to the R position.
3. Turn the ignition key to the START position.
4. Slowly move the selector lever upward until it clicks as it fits into the notch of the P position. If the starter motor operates when the lever makes a click, P position is correct.
5. Then slowly move the selector lever to the N position by the same procedure as in the preceding paragraph. If the starter motor operates when the selector lever is at the N position, then the N position is correct.
6. Also check that the vehicle doesn't begin to move and the lever doesn't stop between P–R–N–D.
7. The control cable is properly adjusted if, as described above, the starter motor starts in both P range and N range.

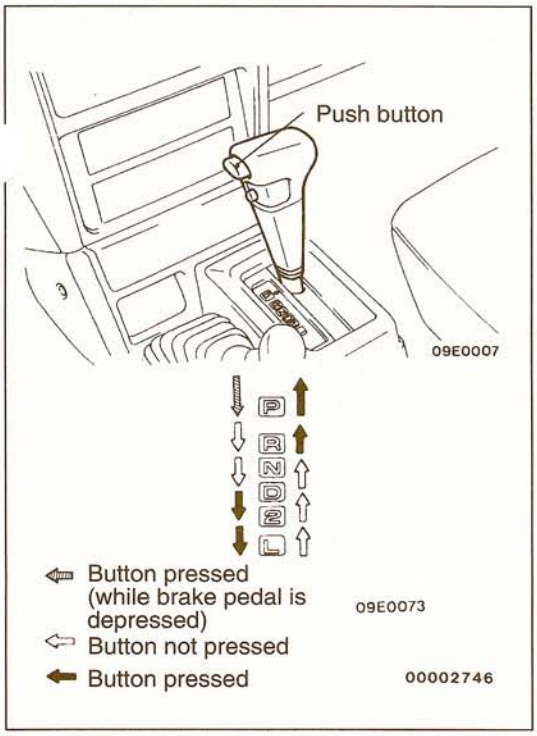


## SELECTOR LEVER OPERATION CHECK 23100130069

1. Move the selector lever to each position and check that the lever moves smoothly and is controlled. Check that the position indicator is correct.
2. Check that the selector lever can be moved to each position by button operation as shown in the illustration).
3. Start the engine and check that the vehicle moves forward when the selector lever is shifted from N to D, and moves backward when shifted to R.
4. If there is a malfunction of the shift lever, adjust the control cable and selector lever sleeve. Check for worn shift lever assembly sliding parts.

   NOTE
   To move the selector lever from the P position to any other position, first turn the ignition key to any position other than LOCK and depress the brake pedal.

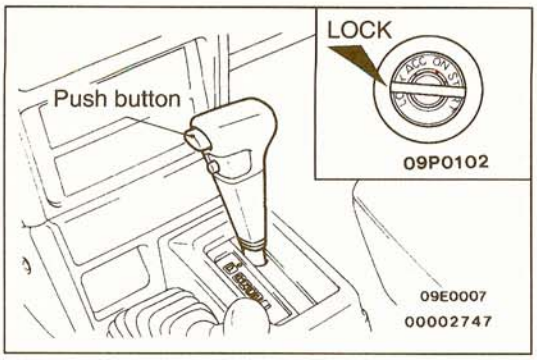


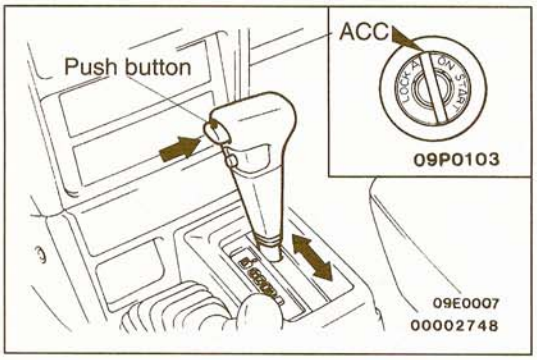


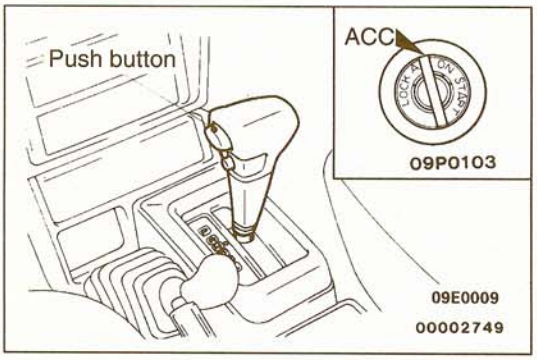


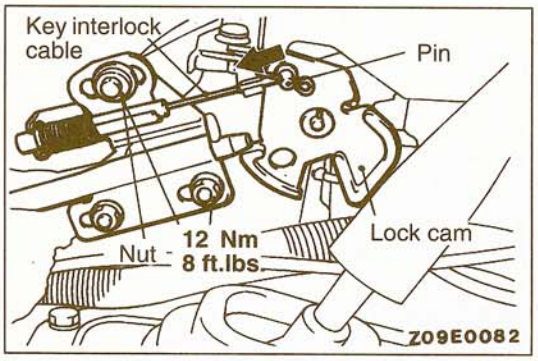


## KEY INTERLOCK MECHANISM CHECK 23200090056

Completely stop the vehicle and switch off the engine before making the check.

1. Check that the selector lever cannot be moved from ti P position to any other position under the following conditions.
   At the same time, check that the button cannot be pressed.

   **Ignition key position: LOCK or removed**
   **Brake pedal: Depressed**

2. Check that the selector lever can be moved smoothly from the position to any other position under the following conditions.
   Press the button a few times and check that the selector lever moves smoothly.

   **Ignition key position: ACC**
   **Brake pedal: Depressed**
   **Button pressed**

3. Check that the ignition key cannot be turned to the LOCK position at all positions of the selector lever other than P.
   Check that the ignition key turns smoothly to the LOCK position when the selector lever is set to the P positic and the button is released.
4. If the above checks are not okay, adjust the key interlock cable mechanism as follows.
   (1) Remove the front console assembly.
   (2) Move the selector lever to the P position.
   (3) Turn the ignition key to the LOCK position.
   (4) Loosen the nut clamping the key interlock cable.
   (5) Gently push the lock cam until the pin stops in the direction of the arrow, and then tighten the nut to the specified torque to clamp the key interlock cable.
   (6) Install the front console assembly.

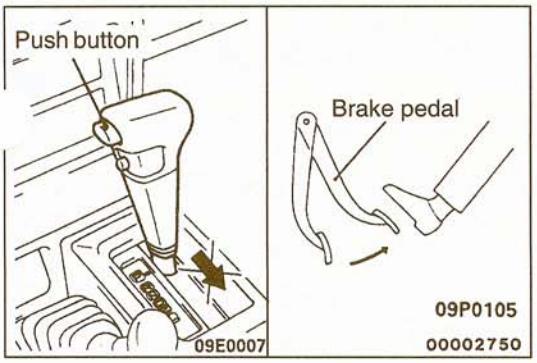


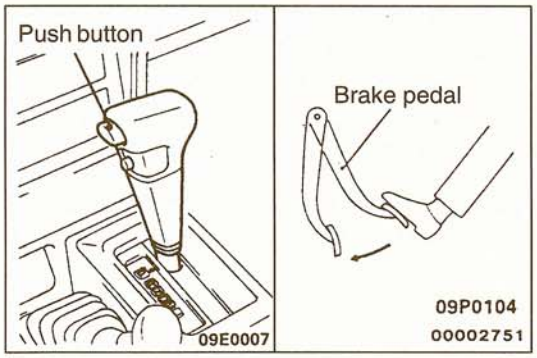


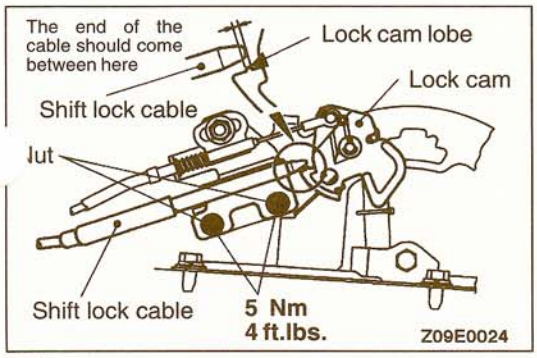


## SHIFT LOCK MECHANISM CHECK 23200100056

1. Check that the selector lever cannot be moved from the P position to any other position under the following conditions.

   **Ignition key position: ACC**
   **Brake pedal: Released**
   **Button pressed**

2. Check that the selector lever can be moved smoothly from the P position to other position under the following conditions.

   **Ignition key position: ACC**
   **Brake pedal: Depressed**
   **Button pressed**

3. Check that the selector lever can be moved smoothly from the R position to the P position under the following conditions.

   **Ignition key position: ACC**
   **Brake pedal: Released**
   **Button pressed**

4. If the above operations are defective, adjust the shift lock cable mechanism by the following procedure.
   (1) Remove the front console assembly. (Refer to GROUP 52A – Floor Console.)
   (2) Move the selector lever to the P position.
   (3) Loosen the nut clamping the shift lock cable.
   (4) Adjust the shift lock cable so that the end of the cable (red mark) comes between the lobe of the lock cam, and then tighten the nut to the specified torque to clamp the shift lock cable.
   (5) Install the front console assembly.

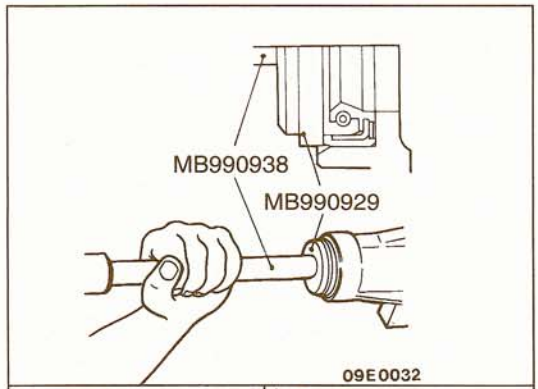


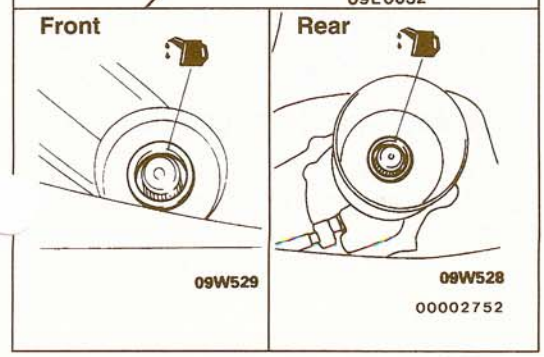


## TRANSFER OIL SEAL REPLACEMENT 23100220018

1. Disconnect the propeller shaft from the transfer. (Refer to GROUP 25 – Propeller Shaft.)
2. Use a flat-tip (–) screwdriver to remove the oil seal.
3. Use the special tool to tap the transfer oil seal into the transfer. Note the direction of installation of the transfer oil seal shown in the illustration.
4. Apply a coating of transmission oil to the lip of the oil seal.

   **Transmission oil:**
   **Hypoid gear oil SAE 75W-90W or 75W-85W conforming API GL-4 or higher**

## 4WD INDICATOR CONTROL UNIT CHECK

23100340011

Refer to GROUP 22A – On-vehicle Service.

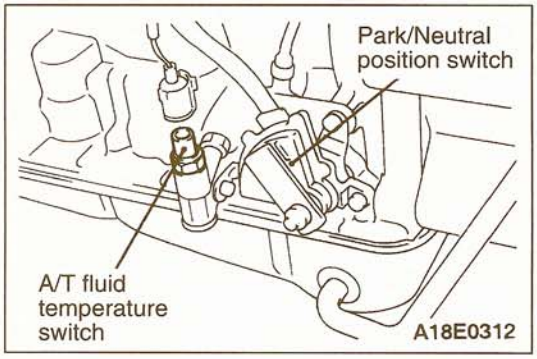


## AUTOMATIC TRANSMISSION FLUID TEMPERATURE SWITCH CHECK

23100350014

1. Remove the automatic transmission fluid temperature switch from the automatic transmission.

**Caution**
**Use care to prevent foreign materials from entering the automatic transmission fluid temperature switch mounting hole.**

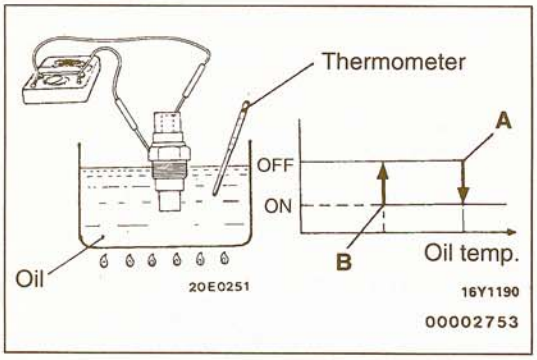


2. Immerse the automatic transmission fluid temperature switch in fluid up to the threaded portion as shown in the illustration.
3. Use a circuit tester or similar tool to check the continuity when oil temperature is changed.
The switch can be judged to be good if the condition are within the following ranges.

| Item | Temperature °C (°F) |
|---|---|
| Continuity (temperature at point A) | 143–151 (289–304) |
| No continuity (temperature at point B) | 125 (257) or less |

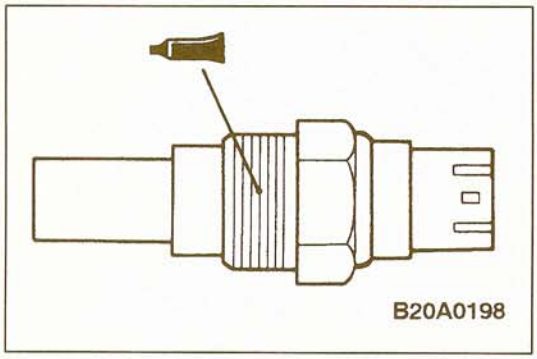


4. Apply a small amount of recommended sealant to the thread of the automatic transmission fluid temperature switch.

**Specified sealant: 3M ATD Part No. 8660 or equivalent**

5. Install the automatic transmission fluid temperature switch
6. Check the quantity of automatic transmission fluid.

**TSB Revision**

## E.L.C. 4TH GEAR AUTOMATIC TRANSMISSION CONTROL COMPONENT LAYOUT <V4AW3>

23100860067

| Name | Symbol | Name | Symbol |
|---|---|---|---|
| A/T speed sensor | E | Pattern select switch | K |
| Data link connector | G | Solenoids | D |
| Engine coolant temperature switch | F | Stop lamp switch | I |
| O.D. – OFF switch | J | TCM | H |
| Oil temperature sensor | B | Throttle position sensor | C |
| Park/neutral position switch | A | Vehicle speed sensor | L |

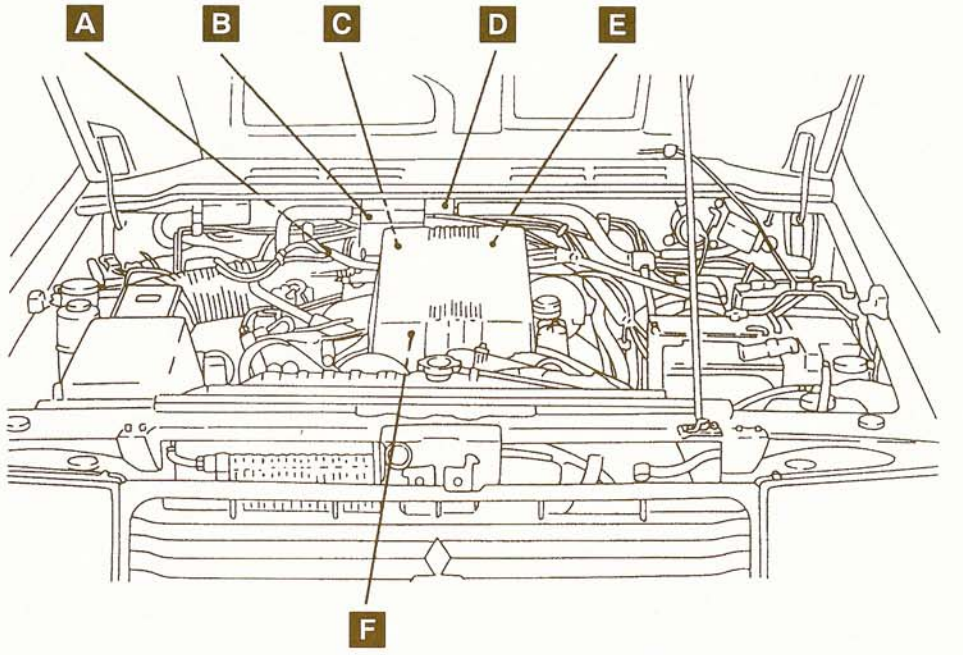


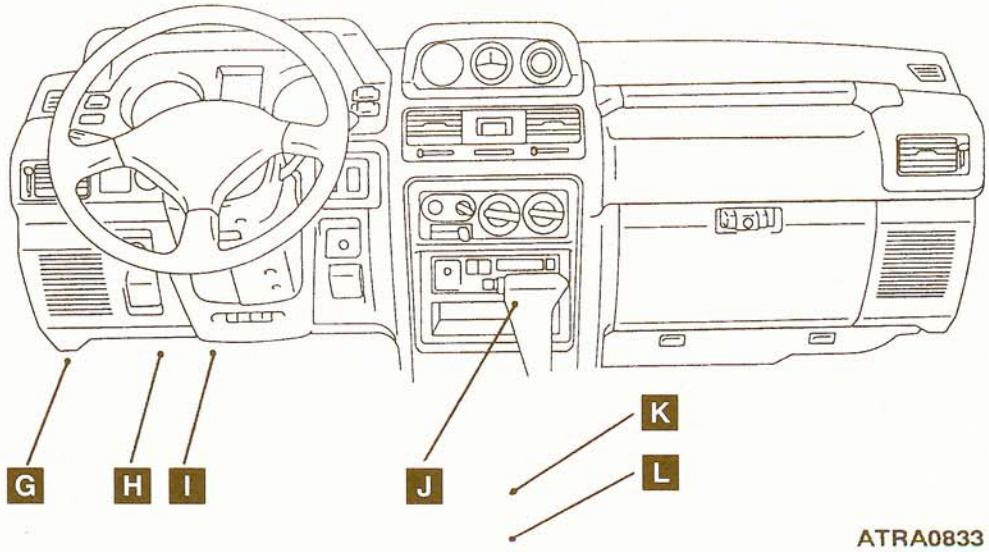


ATRA0833

TSB Revision 97-23-001

A

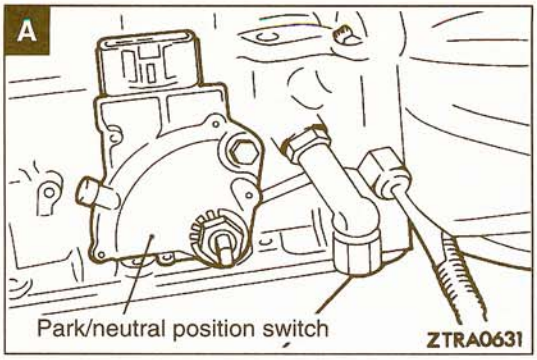


B

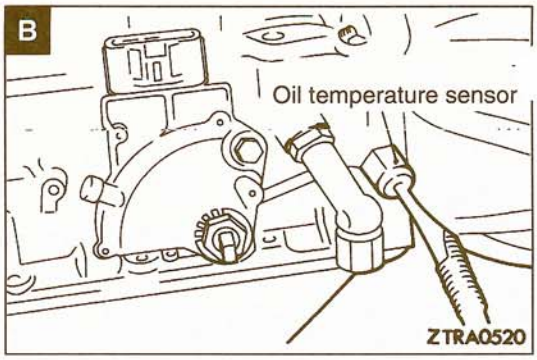


C

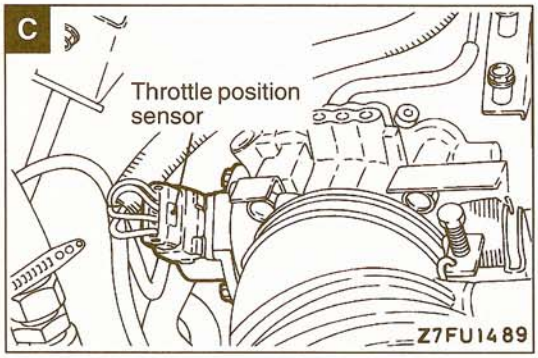


D

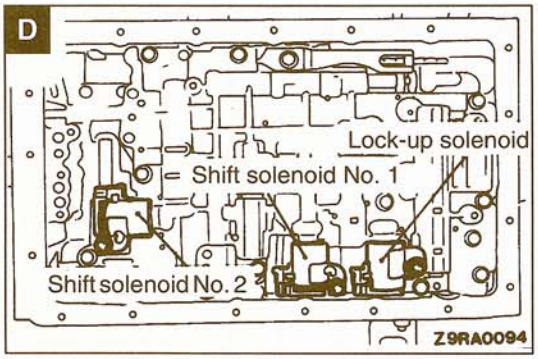


E

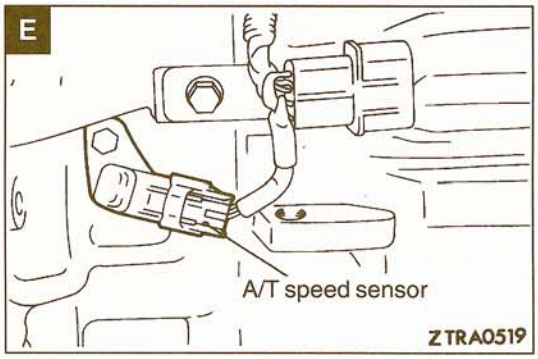


F

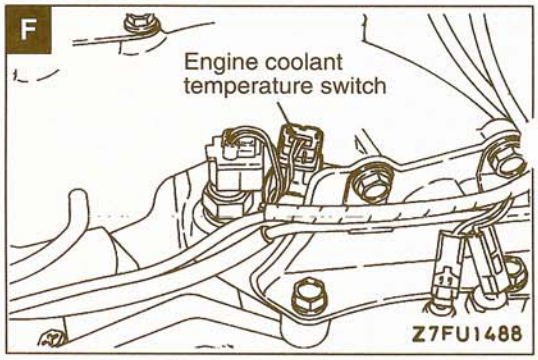


G

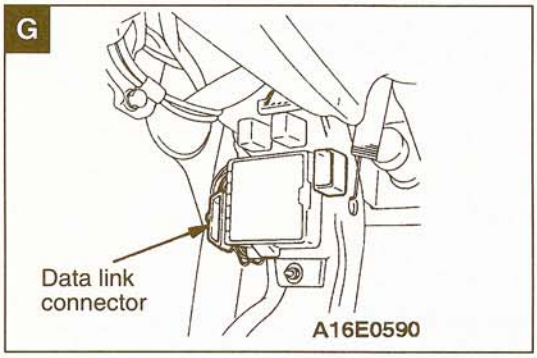


H

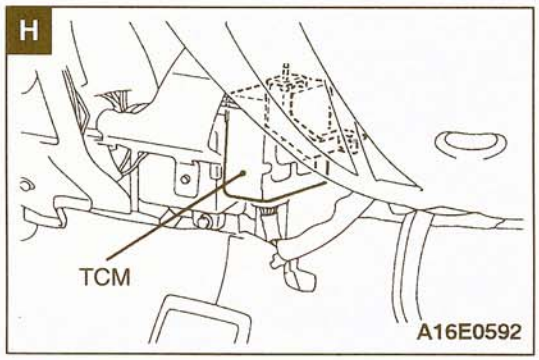


I

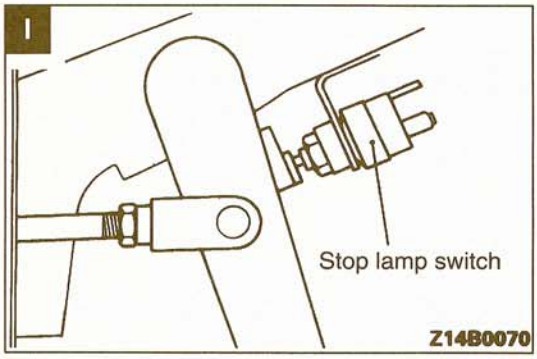


J

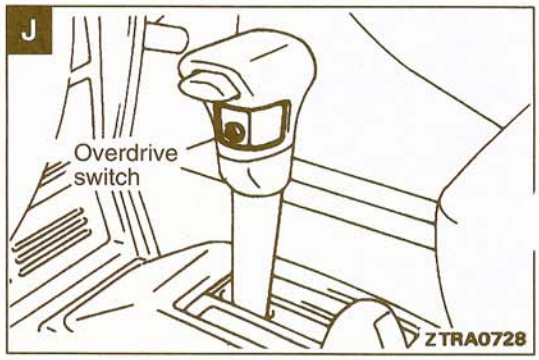


TSB Revision 97-23-001

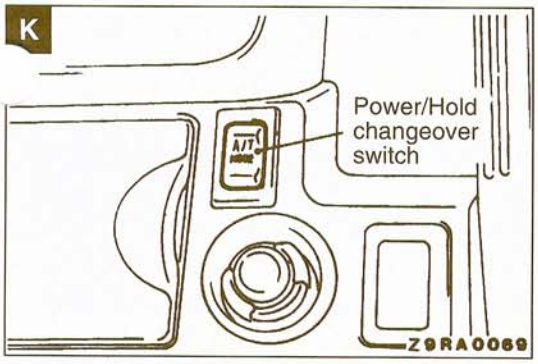


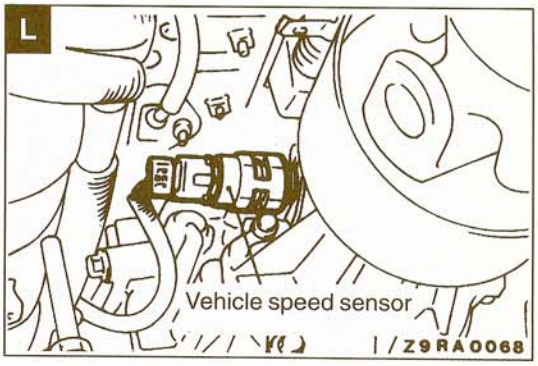


## V4AW3 CONTROL COMPONENT CHECK 23100390085

### THROTTLE POSITION SENSOR CHECK

Refer to GROUP 13A – On-vehicle Inspection of MFI components.

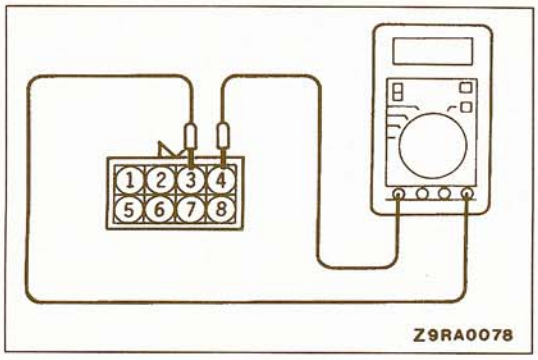


### A/T SPEED SENSOR CHECK 23100970012

(1) Disconnect the vehicle speed sensor connector.
(2) Measure the resistance between terminals No. 3–4 of the sensor-side connector.

**Standard value: 620±60 Ω [at 20°C (68°F)]**

(3) If the resistance is outside the standard value, replace the vehicle speed sensor.

### VEHICLE SPEED SENSOR CHECK 23100460090

Refer to GROUP 54 – On-vehicle Service.

### STOP LIGHT SWITCH CHECK 23101010010

Refer to GROUP 35A – Brake Pedal.

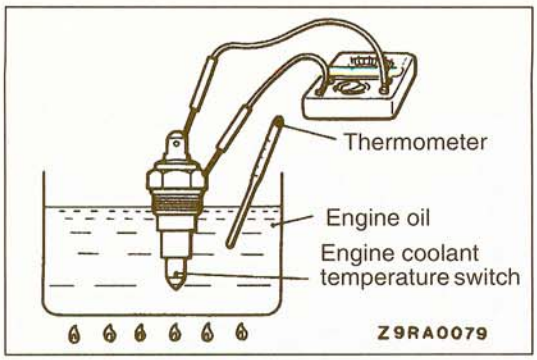


## ENGINE COOLANT TEMPERATURE SWITCH 23101020013

(1) Disconnect the engine coolant temperature switch connector.
(2) Check for continuity between the sensor connect terminal and the sensor body.

**Standard value:**

| Oil temperature | Continuity |
|---|---|
| 30°C (86°F) | No continuity |
| 60°C (140°F) | Continuity |

(2) Check for continuity between the sensor connector terminal and the sensor body.

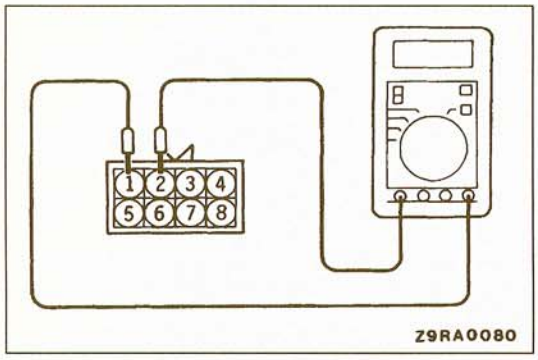


## OIL TEMPERATURE SENSOR CHECK 23100450066

(1) Disconnect the oil temperature sensor connector.
(2) Measure the resistances between terminals No. 1–2 of the oil temperature sensor connector and check that they match the values below.

**Standard value:**

| Oil temperature | Resistance value |
|---|---|
| 25°C (77°F) | 10 kΩ |
| 120°C (248°F) | 615 Ω |

(3) If the resistance is outside the standard value, replace the oil temperature sensor.

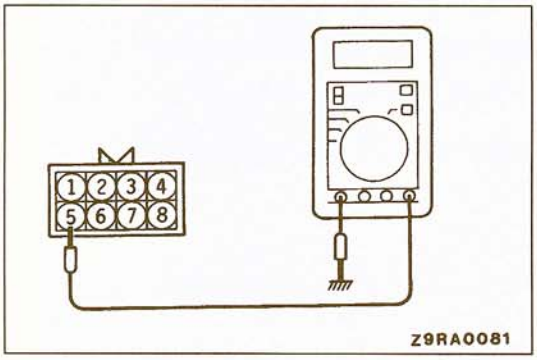


## SHIFT SOLENOID NO. 1 CHECK 23100980015

(1) Disconnect the shift solenoid connector.
(2) Measure the resistance between terminal No. 5 and the ground.

**Standard value: 13±2 Ω [at 25°C (77°F)]**

(3) If the resistance is outside the standard value, repla the solenoid assembly.

**TSB Revision** 97-73-001

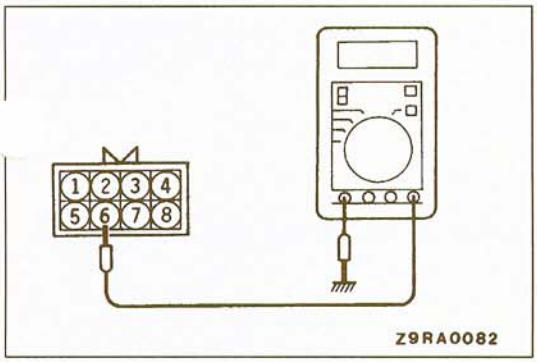


### SHIFT SOLENOID NO. 2 CHECK

23100990018

(1) Disconnect the shift solenoid connector.
(2) Measure the resistance between terminal No. 6 and the ground.

**Standard value: 13±2 Ω [at 25°C (77°F)]**

(3) If the resistance is outside the standard value, replace the solenoid assembly.

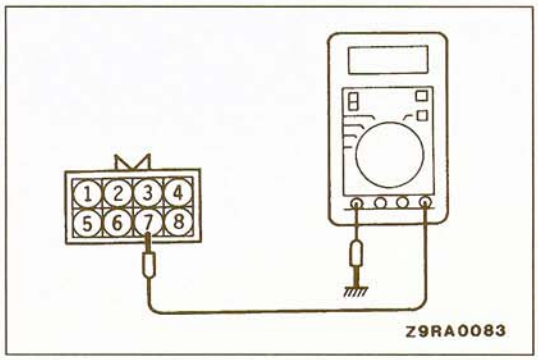


### LOCK-UP SOLENOID CHECK

23101000017

(1) Disconnect the lock-up solenoid connector.
(2) Measure the resistance between terminal No. 7 and the ground.

**Standard value: 13±2 Ω [at 25°C (77°F)]**

(3) If the resistance is outside the standard value, replace the solenoid assembly.

## CONVERTER STALL TEST

23100540077

In this test, the engine maximum speed when the torque converter stalls with the shift lever in the D or R position is measured to check operation the torque converter, stator and one-way clutch and check holding performance of the transmission clutch (including brake).

**Caution**
**Do not stand in front or at rear of the vehicle during this test.**

1. Check the transmission fluid level. The fluid temperature should be at the level after normal operation [50–80°C (122–176°F)]. The engine coolant temperature should also be at the level after normal operation [80–90°C (176–194°F)].
2. Apply chocks to the rear wheels (right and left).
3. Connect a tachometer.
4. Apply the parking and service brakes fully.
5. Start the engine.
6. With the selector lever in the D position, fully depress the accelerator pedal and take a reading of the engine maximum speed.

   **Standard value:**
   **2,100–2,400 rpm (V4AW2)**
   **2,100–2,600 rpm (V4AW3)**

   NOTE
   When doing so, do not keep the engine running with the throttle fully open for longer than necessary (5 seconds or more). If two or more stall tests are needed, move the selector lever to the N position and run it at idle for at about 1,000 rpm to allow the transmission fluid to cool before another stall test.
7. Move the selector lever to the R position and perform the test as above.

## JUDGEMENT OF STALL TEST RESULTS

### <V4AW2>

| | |
|---|---|
| Stall speeds in D and R range are equal to each other but are lower than the standard value. | (1) Engine output is low.<br>(2) Malfunction of stator one-way clutch |
| Stall speed in D range is higher than the standard value. | (1) O.D. clutch slippage.<br>(2) Malfunction of O.D. one-way clutch<br>(3) Forward clutch slippage<br>(4) Malfunction of one-way clutch No. 2<br>(5) Low line pressure |
| Stall speed in R range is higher than the standard value. | (1) O.D. clutch slippage.<br>(2) Malfunction of O.D. one-way clutch<br>(3) Direct clutch slippage<br>(4) Brake No. 3 slipping<br>(5) Low line pressure |

### <V4AW3>

| | |
|---|---|
| Stall speeds in each range are equal to each other but are lower than the standard value. | (1) Throttle valve is not fully open<br>(2) Insufficient engine output<br>(3) Malfunction of stator one-way clutch (Malfunction of torque converter could be the problem if the stall speed is lower than the standard value by 600 rpm or more) |
| Stall speeds in each range are equal to each other but are higher than the standard value. | (1) Low line pressure<br>(2) Fluid level is not at standard level (insufficient fluid)<br>(3) Malfunction of O.D. one-way clutch |
| Stall speed in D range is higher than the standard value | (1) Forward clutch slippage<br>(2) Malfunction of O.D. one-way clutch<br>(3) Malfunction of one-way clutch No. 2<br>(4) Low line pressure |
| Stall speed in R range is higher than the standard value | (1) Direct clutch slippage<br>(2) 1st & reverse brake slippage<br>(3) Low line pressure<br>(4) Malfunction of O.D. one-way clutch |

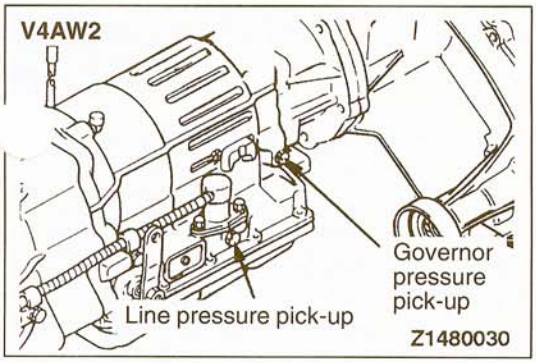


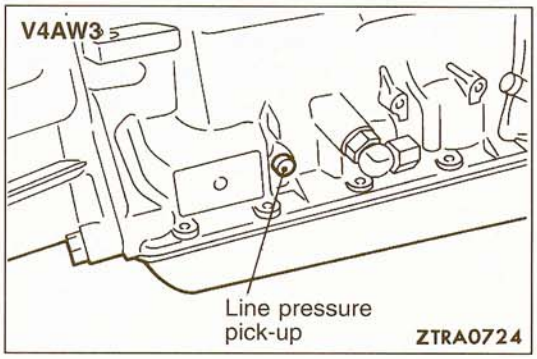


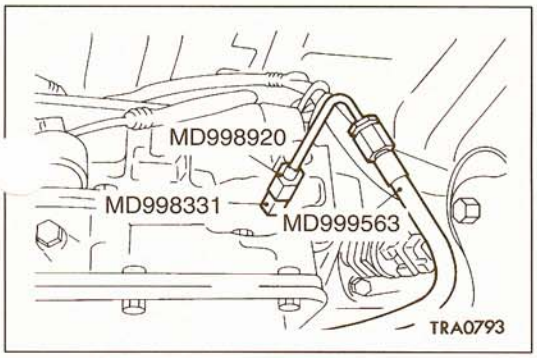


## HYDRAULIC PRESSURE TEST

23100550070

The hydraulic pressure tests (governor pressure and line pressure tests) are important in determining the causes of transmission failures.
Before conducting these tests, the fluid level and condition and throttle cable adjustment etc. must be checked for defects or abnormalities. When conducting the tests, the engine and transmission should be at the correct operating temperatures, [engine coolant water 80–90°C (176–194°F), transmission fluid 70–80°C (158–176°F)].

### GOVERNOR PRESSURE TEST (V4AW2 only)

1. Place the vehicle on a chassis dynamometer.
2. Remove the plug from the governor pressure take-off port.
3. Install the special tool as shown in the illustration and then place the meter inside the vehicle.

   NOTE
   If the adapter interferes with the extension housing, repair the tool as shown in the illustration.
4. Apply the parking brake.
5. Start the engine.
6. Release the parking brake.
7. Move the selector lever to the D position and measure governor pressure at each output shaft rpm.

**Standard value:**

| Output shaft speed (rpm) | Vehicle speed km/h (mph) | Governor pressure kPa (psi) |
|---|---|---|
| 1,000 | 28 (17) | 140–170 (19.9–24.2) |
| 2,000 | 56 (35) | 250–290 (35.6–41.2) |
| 3,200 | 90 (56) | 410–470 (58.3–66.8) |

### JUDGEMENT BY GOVERNOR PRESSURE

| | |
|---|---|
| Governor pressure is not within the standard value | • Incorrect line pressure<br>• Oil leak in governor circuit<br>• Malfunction of governor |

TSB Revision

## LINE PRESSURE TEST

1. Place the vehicle on a chassis dynamometer.
2. Remove the plug from the line pressure take-off port.
3. Install the special tool as shown in the illustration a then place the meter inside the vehicle.
4. Apply the parking brake.
5. Start the engine.
6. Move the selector lever to the D position.
7. Depress the brake pedal firmly with the left foot and operates the accelerator pedal with the right foot to measure the line pressure at each engine rpm. If the measured pressure is not at the standard pressure, check the adjustment of the throttle cable and readjust if necessary before conducting the test again.
8. Move the selector lever to the R position and test as above.

<V4AW2>

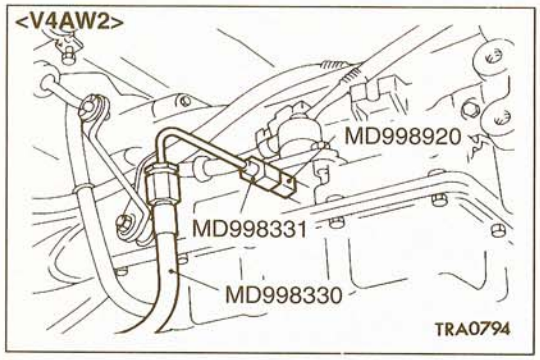


**Standard value:**

| | Line pressure kPa (psi) | |
|---|---|---|
| | D range | R range |
| At idle | 520–600 (74–85) | 790–910 (112–129) |
| At stall | 1,100–1,300 (156–185) | 1,600–2,000 (228–284) |

<V4AW3>

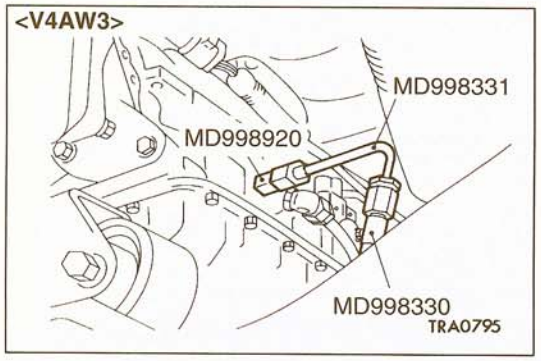


**Standard value:**

| | Line pressure kPa (psi) | |
|---|---|---|
| | D range | R range |
| At idle | 430–490 (61–70) | 520–620 (74–88) |
| At stall | 1,140–1,390 (162–198) | 1,400–1,750 (199–249) |

TSB Revision

## JUDGEMENT BY LINE PRESSURE

### <V4AW2>

| | |
|---|---|
| Hydraulic pressure in all ranges is higher than the standard value | (1) Malfunction of regulator valve |
| | (2) Malfunction of throttle valve |
| | (3) Incorrect throttle cable adjustment |
| Hydraulic pressure in all ranges is lower than the standard value | (1) Malfunction of oil pump |
| | (2) Malfunction of regulator valve |
| | (3) Malfunction of throttle valve |
| | (4) Incorrect throttle cable adjustment |
| | (5) Malfunction of O.D. clutch |
| Hydraulic pressure in D range is lower than the standard value. | (1) Large fluid leaks in D range hydraulic circuit |
| | (2) Malfunction of forward clutch |
| | (3) Malfunction of O.D. clutch |
| Hydraulic pressure in R range is lower than the standard value. | (1) Large fluid leaks in R range hydraulic circuit |
| | (2) Malfunction of brake No. 3 |
| | (3) Malfunction of direct clutch |
| | (4) Malfunction of O.D. clutch |

### <V4AW3>

| | |
|---|---|
| Hydraulic pressure in all ranges is higher than the standard value | (1) Malfunction of regulator valve |
| | (2) Malfunction of throttle valve |
| | (3) Incorrect throttle cable adjustment |
| Hydraulic pressure in all ranges is lower than the standard value | (1) Malfunction of oil pump |
| | (2) Malfunction of regulator valve |
| | (3) Malfunction of throttle valve |
| | (4) Incorrect throttle cable adjustment |
| | (5) Malfunction of O.D. direct clutch |
| Hydraulic pressure in D range is lower than the standard value | (1) Large fluid leaks in D range hydraulic circuit |
| | (2) Malfunction of forward clutch |
| | (3) Malfunction of O.D. direct clutch |
| Hydraulic pressure in R range is lower than the standard value | (1) Large fluid leaks in R range hydraulic circuit |
| | (2) Malfunction of 1st & reverse brake |
| | (3) Malfunction of direct clutch |
| | (4) Malfunction of O.D. direct clutch |

**TSB Revision**

## HYDRAULIC CIRCUIT <V4AW2>

23100880063

### N (NEUTRAL)

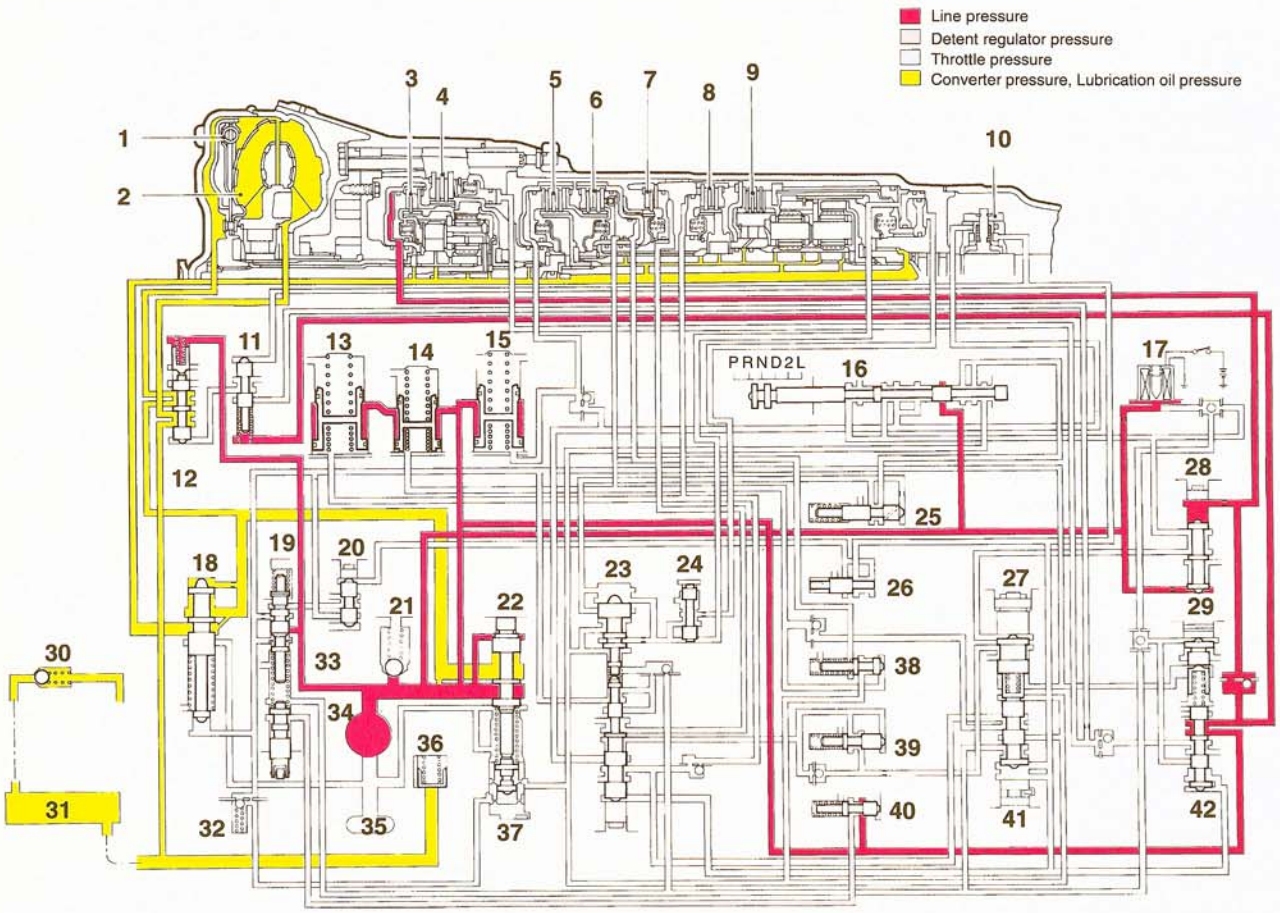


ZTRA0436

1. Lockup clutch
2. Torque converter
3. Overdrive clutch
4. Overdrive brake
5. Forward clutch
6. Direct clutch
7. Brake No. 1
8. Brake No. 2
9. Brake No. 3
10. Governor
11. Lockup signal valve
12. Lockup relay valve
13. Accumulator B2
14. Accumulator C2
15. Accumulator C1
16. Manual valve
17. OD solenoid valve
18. Secondary regulator valve
19. Throttle valve
20. Cut back valve
21. Pressure relief valve
22. Primary regulator valve
23. Low coast shift valve
24. Plug
25. Low coast modulator valve
26. Plug
27. Intermediate shift valve
28. D–2 down timing valve
29. Third coast shift valve
30. Oil cooler return ball
31. Oil cooler
32. Damping check ball
33. Down-shift plug
34. Oil pump
35. Strainer
36. Oil cooler by-pass valve
37. 1–2 shift valve
38. Reverse clutch sequence valve
39. Intermediate modulator valve
40. Detent regulator valve
41. 2–3 shift valve
42. 3–4 shift valve

**TSB Revision**

## P (PARKING)

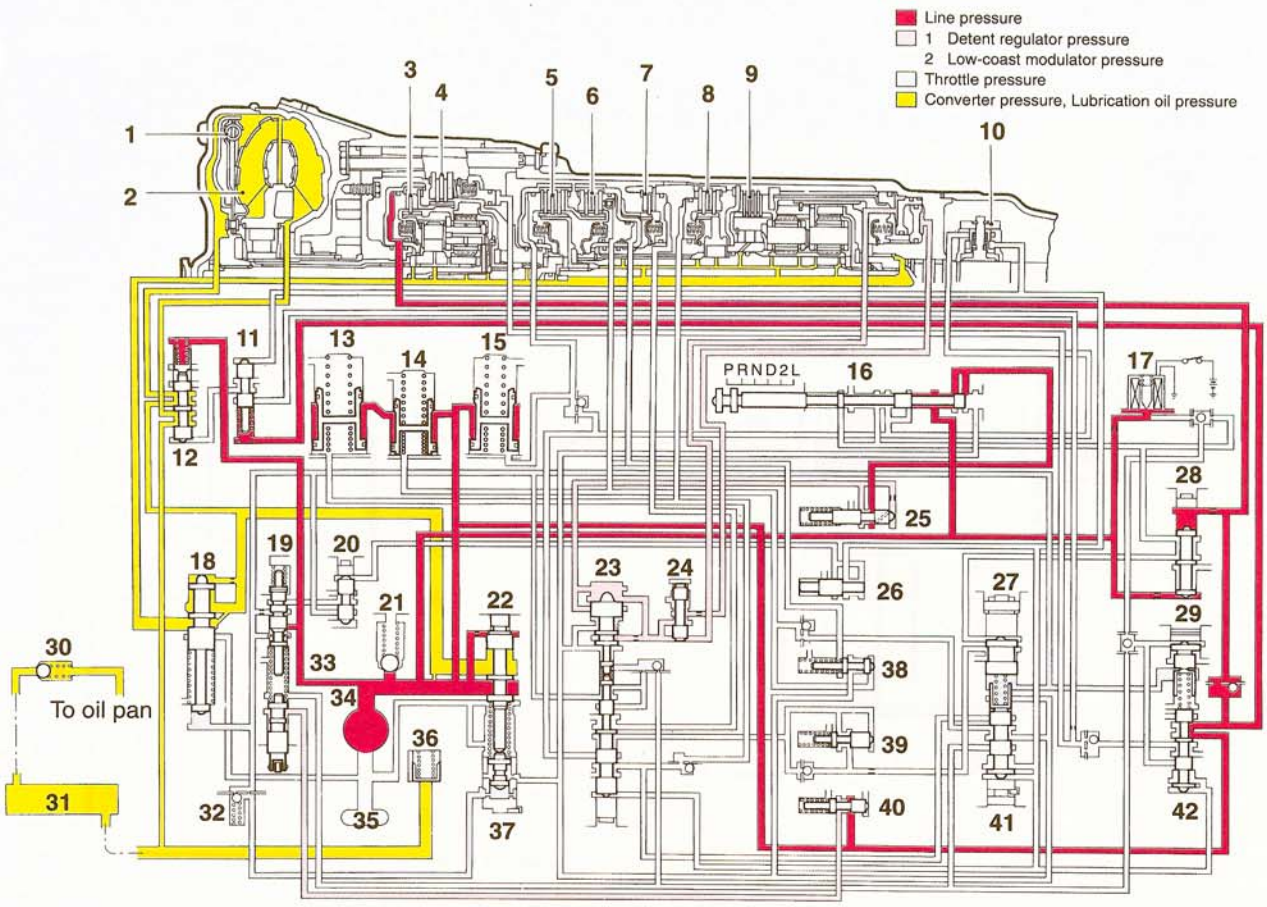


Z TRA0437

1. Lockup clutch
2. Torque converter
3. Overdrive clutch
4. Overdrive brake
5. Forward clutch
6. Direct clutch
7. Brake No. 1
8. Brake No. 2
9. Brake No. 3
10. Governor
11. Lockup signal valve
12. Lockup relay valve
13. Accumulator B2
14. Accumulator C2
15. Accumulator C1
16. Manual valve
17. OD solenoid valve
18. Secondary regulator valve
19. Throttle valve
20. Cut back valve
21. Pressure relief valve
22. Primary regulator valve
23. Low coast shift valve
24. Plug
25. Low coast modulator valve
26. Plug
27. Intermediate shift valve
28. D–2 down timing valve
29. Third coast shift valve
30. Oil cooler return ball
31. Oil cooler
32. Damping check ball
33. Down-shift plug
34. Oil pump
35. Strainer
36. Oil cooler by-pass valve
37. 1–2 shift valve
38. Reverse clutch sequence valve
39. Intermediate modulator valve
40. Detent regulator valve
41. 2–3 shift valve
42. 3–4 shift valve

**TSB Revision**

## D–1 (DRIVE 1ST)

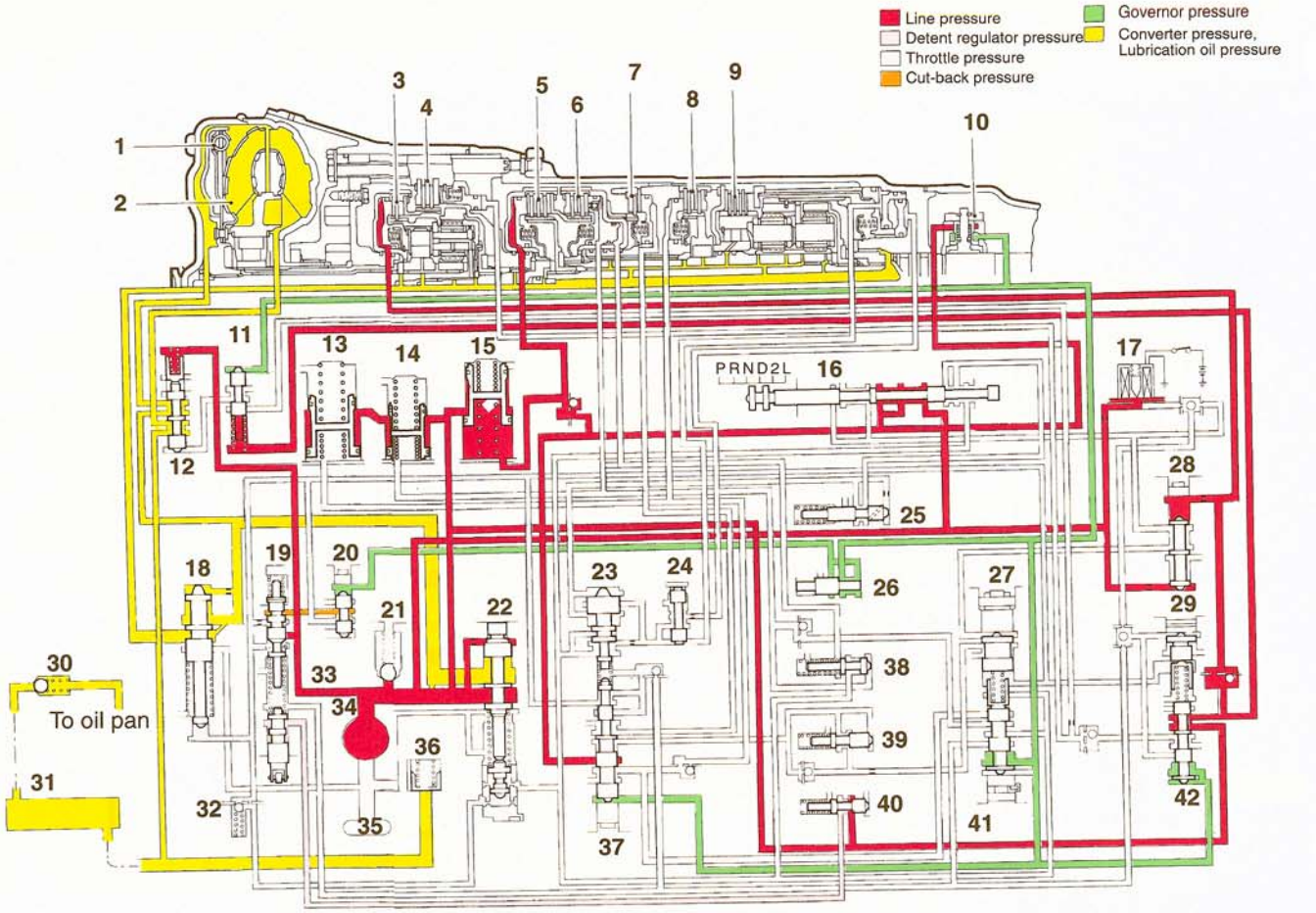


1. Lockup clutch
2. Torque converter
3. Overdrive clutch
4. Overdrive brake
5. Forward clutch
6. Direct clutch
7. Brake No. 1
8. Brake No. 2
9. Brake No. 3
10. Governor
11. Lockup signal valve
12. Lockup relay valve
13. Accumulator B2
14. Accumulator C2
15. Accumulator C1
16. Manual valve
17. OD solenoid valve
18. Secondary regulator valve
19. Throttle valve
20. Cut back valve
21. Pressure relief valve
22. Primary regulator valve
23. Low coast shift valve
24. Plug
25. Low coast modulator valve
26. Plug
27. Intermediate shift valve
28. D–2 down timing valve
29. Third coast shift valve
30. Oil cooler return ball
31. Oil cooler
32. Damping check ball
33. Down-shift plug
34. Oil pump
35. Strainer
36. Oil cooler by-pass valve
37. 1–2 shift valve
38. Reverse clutch sequence valve
39. Intermediate modulator valve
40. Detent regulator valve
41. 2–3 shift valve
42. 3–4 shift valve

**TSB Revision**

## D–2 (DRIVE 2ND)

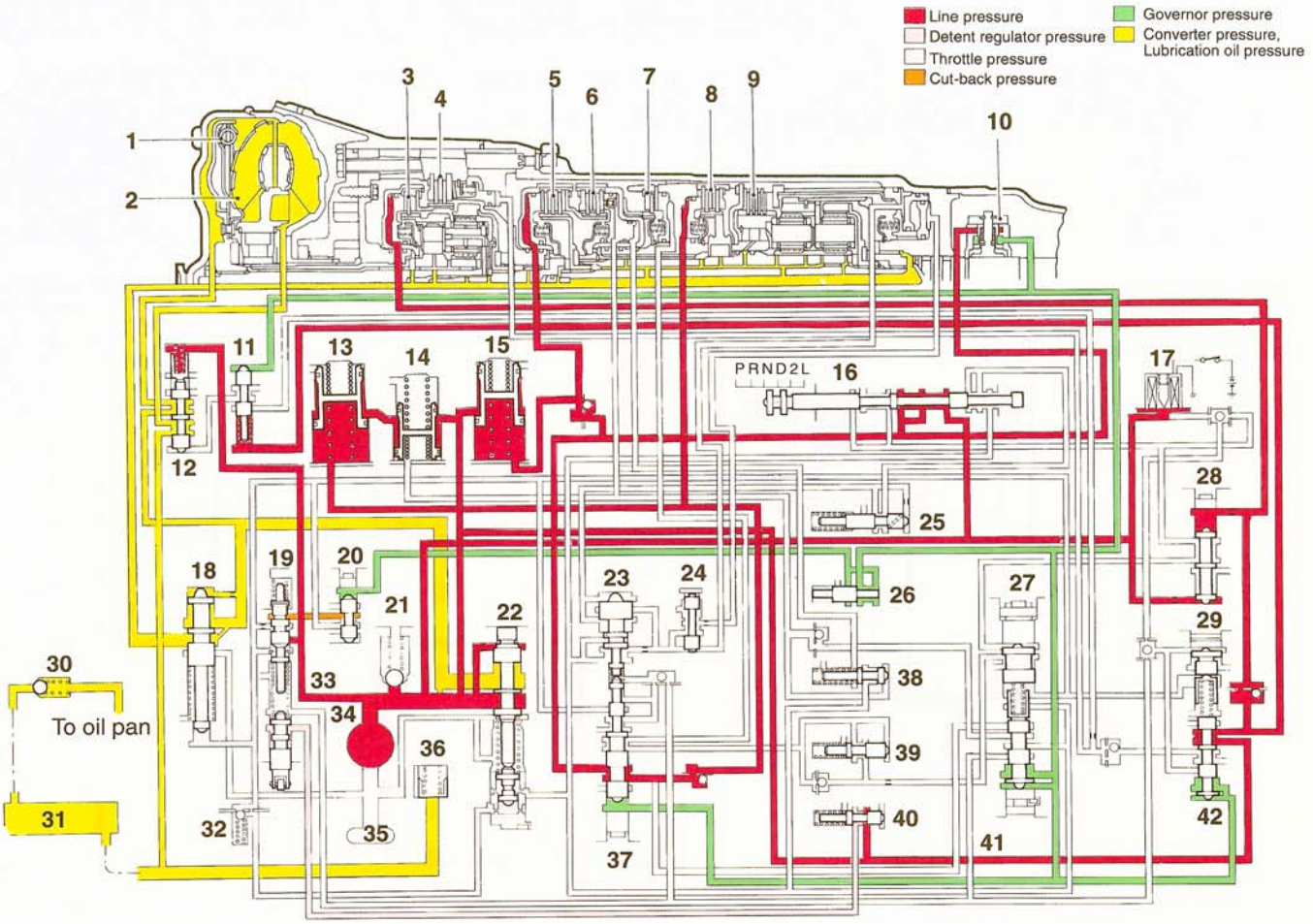


ZTRA0439

1. Lockup clutch
2. Torque converter
3. Overdrive clutch
4. Overdrive brake
5. Forward clutch
6. Direct clutch
7. Brake No. 1
8. Brake No. 2
9. Brake No. 3
10. Governor
11. Lockup signal valve
12. Lockup relay valve
13. Accumulator B2
14. Accumulator C2
15. Accumulator C1
16. Manual valve
17. OD solenoid valve
18. Secondary regulator valve
19. Throttle valve
20. Cut back valve
21. Pressure relief valve
22. Primary regulator valve
23. Low coast shift valve
24. Plug
25. Low coast modulator valve
26. Plug
27. Intermediate shift valve
28. D–2 down timing valve
29. Third coast shift valve
30. Oil cooler return ball
31. Oil cooler
32. Damping check ball
33. Down-shift plug
34. Oil pump
35. Strainer
36. Oil cooler by-pass valve
37. 1–2 shift valve
38. Reverse clutch sequence valve
39. Intermediate modulator valve
40. Detent regulator valve
41. 2–3 shift valve
42. 3–4 shift valve

**TSB Revision**

## D–3 (DRIVE 3RD)

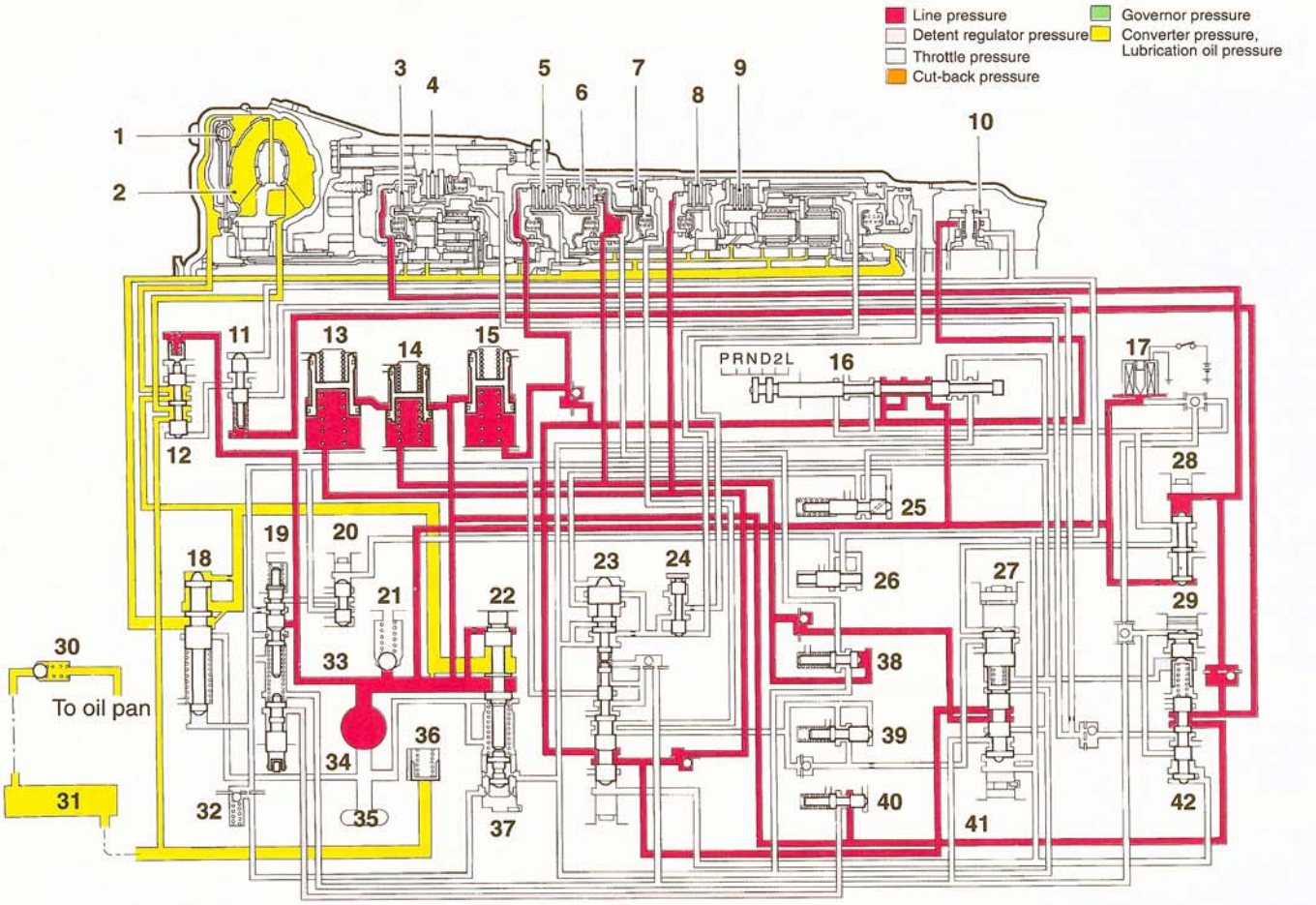


1. Lockup clutch
2. Torque converter
3. Overdrive clutch
4. Overdrive brake
5. Forward clutch
6. Direct clutch
7. Brake No. 1
8. Brake No. 2
9. Brake No. 3
10. Governor
11. Lockup signal valve
12. Lockup relay valve
13. Accumulator B2
14. Accumulator C2
15. Accumulator C1
16. Manual valve
17. OD solenoid valve
18. Secondary regulator valve
19. Throttle valve
20. Cut back valve
21. Pressure relief valve
22. Primary regulator valve
23. Low coast shift valve
24. Plug
25. Low coast modulator valve
26. Plug
27. Intermediate shift valve
28. D–2 down timing valve
29. Third coast shift valve
30. Oil cooler return ball
31. Oil cooler
32. Damping check ball
33. Down-shift plug
34. Oil pump
35. Strainer
36. Oil cooler by-pass valve
37. 1–2 shift valve
38. Reverse clutch sequence valve
39. Intermediate modulator valve
40. Detent regulator valve
41. 2–3 shift valve
42. 3–4 shift valve

**TSB Revision**

## D–4 (DRIVE 4TH)
## TORQUE CONVERTER CLUTCH: OFF

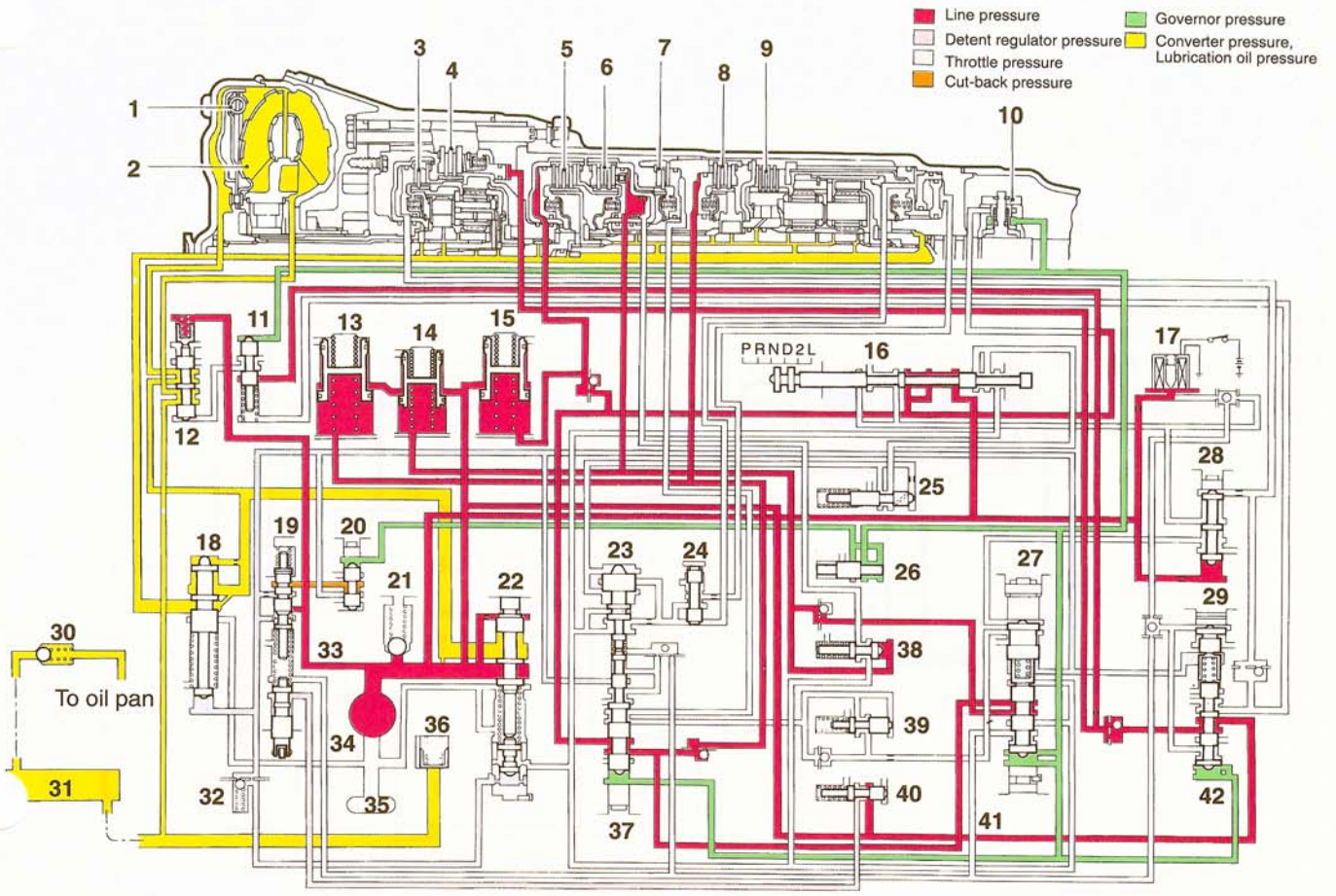


ZTRA0441

1. Lockup clutch
2. Torque converter
3. Overdrive clutch
4. Overdrive brake
5. Forward clutch
6. Direct clutch
7. Brake No. 1
8. Brake No. 2
9. Brake No. 3
10. Governor
11. Lockup signal valve
12. Lockup relay valve
13. Accumulator B2
14. Accumulator C2
15. Accumulator C1
16. Manual valve
17. OD solenoid valve
18. Secondary regulator valve
19. Throttle valve
20. Cut back valve
21. Pressure relief valve
22. Primary regulator valve
23. Low coast shift valve
24. Plug
25. Low coast modulator valve
26. Plug
27. Intermediate shift valve
28. D–2 down timing valve
29. Third coast shift valve
30. Oil cooler return ball
31. Oil cooler
32. Damping check ball
33. Down-shift plug
34. Oil pump
35. Strainer
36. Oil cooler by-pass valve
37. 1–2 shift valve
38. Reverse clutch sequence valve
39. Intermediate modulator valve
40. Detent regulator valve
41. 2–3 shift valve
42. 3–4 shift valve

**TSB Revision**

## D–4 (DRIVE 4TH)
## TORQUE CONVERTER CLUTCH: ON

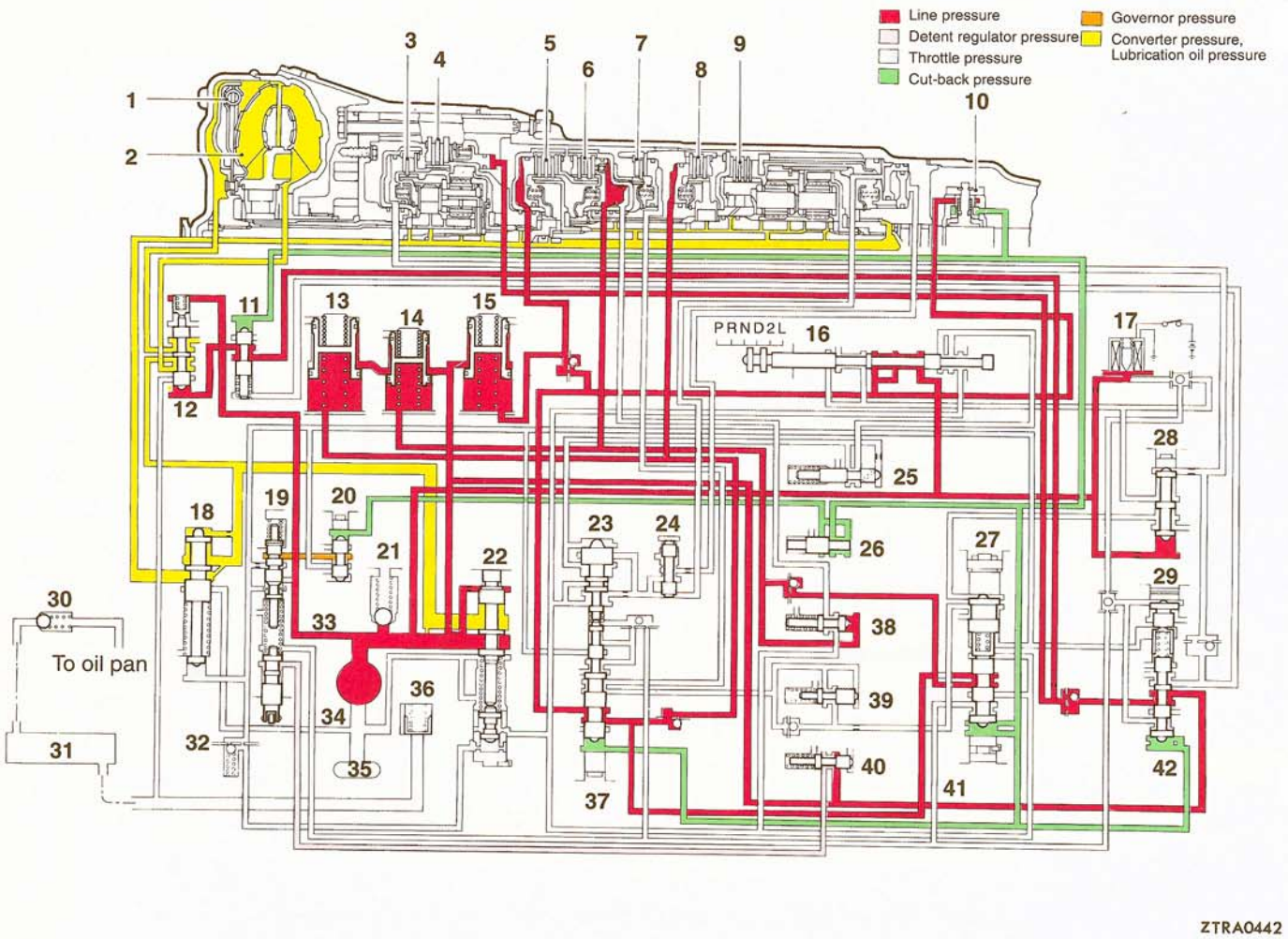


ZTRA0442

1. Lockup clutch
2. Torque converter
3. Overdrive clutch
4. Overdrive brake
5. Forward clutch
6. Direct clutch
7. Brake No. 1
8. Brake No. 2
9. Brake No. 3
10. Governor
11. Lockup signal valve
12. Lockup relay valve
13. Accumulator B2
14. Accumulator C2
15. Accumulator C1
16. Manual valve
17. OD solenoid valve
18. Secondary regulator valve
19. Throttle valve
20. Cut back valve
21. Pressure relief valve
22. Primary regulator valve
23. Low coast shift valve
24. Plug
25. Low coast modulator valve
26. Plug
27. Intermediate shift valve
28. D–2 down timing valve
29. Third coast shift valve
30. Oil cooler return ball
31. Oil cooler
32. Damping check ball
33. Down-shift plug
34. Oil pump
35. Strainer
36. Oil cooler by-pass valve
37. 1–2 shift valve
38. Reverse clutch sequence valve
39. Intermediate modulator valve
40. Detent regulator valve
41. 2–3 shift valve
42. 3–4 shift valve

**TSB Revision**

## D–K/D (DRIVE KICK DOWN)
## 4TH → 3RD

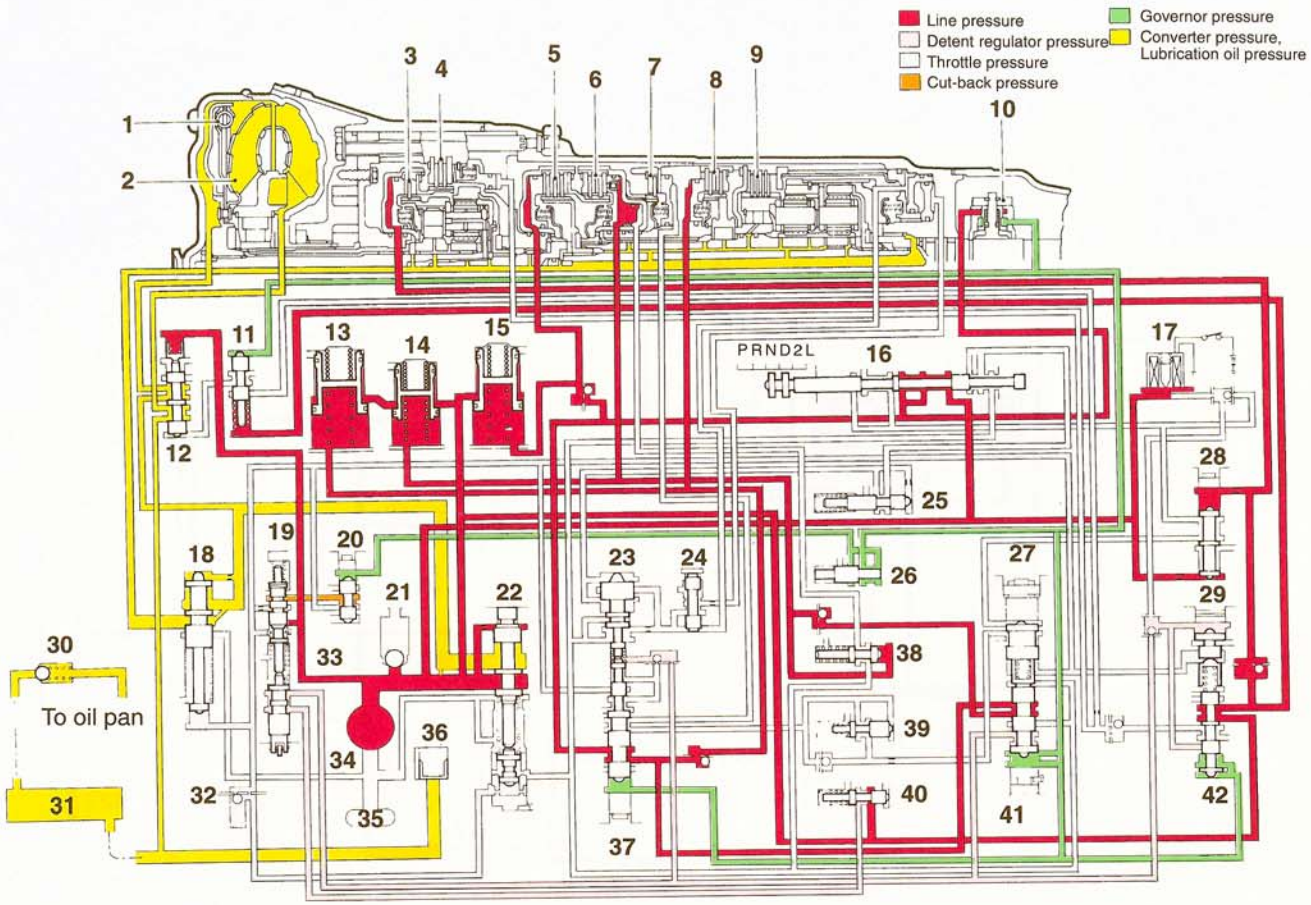


ZTRA0443

1. Lockup clutch
2. Torque converter
3. Overdrive clutch
4. Overdrive brake
5. Forward clutch
6. Direct clutch
7. Brake No. 1
8. Brake No. 2
9. Brake No. 3
10. Governor
11. Lockup signal valve
12. Lockup relay valve
13. Accumulator B2
14. Accumulator C2
15. Accumulator C1
16. Manual valve
17. OD solenoid valve
18. Secondary regulator valve
19. Throttle valve
20. Cut back valve
21. Pressure relief valve
22. Primary regulator valve
23. Low coast shift valve
24. Plug
25. Low coast modulator valve
26. Plug
27. Intermediate shift valve
28. D–2 down timing valve
29. Third coast shift valve
30. Oil cooler return ball
31. Oil cooler
32. Damping check ball
33. Down-shift plug
34. Oil pump
35. Strainer
36. Oil cooler by-pass valve
37. 1–2 shift valve
38. Reverse clutch sequence valve
39. Intermediate modulator valve
40. Detent regulator valve
41. 2–3 shift valve
42. 3–4 shift valve

**TSB Revision**

## D–3 (DRIVE 3RD)
## OVERDRIVE SWITCH: OFF

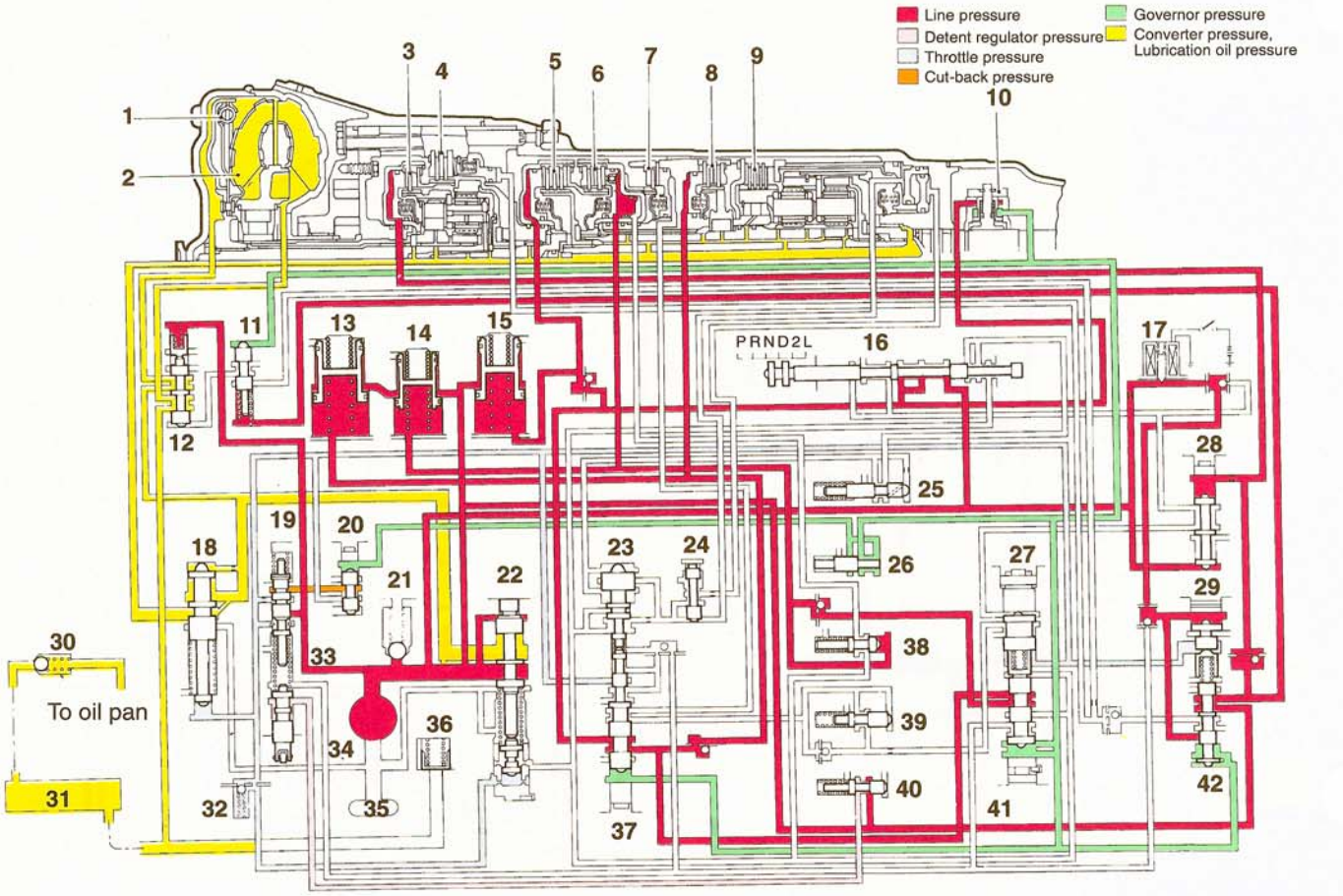


ZTRA0444

1. Lockup clutch
2. Torque converter
3. Overdrive clutch
4. Overdrive brake
5. Forward clutch
6. Direct clutch
7. Brake No. 1
8. Brake No. 2
9. Brake No. 3
10. Governor
11. Lockup signal valve
12. Lockup relay valve
13. Accumulator B2
14. Accumulator C2
15. Accumulator C1
16. Manual valve
17. OD solenoid valve
18. Secondary regulator valve
19. Throttle valve
20. Cut back valve
21. Pressure relief valve
22. Primary regulator valve
23. Low coast shift valve
24. Plug
25. Low coast modulator valve
26. Plug
27. Intermediate shift valve
28. D–2 down timing valve
29. Third coast shift valve
30. Oil cooler return ball
31. Oil cooler
32. Damping check ball
33. Down-shift plug
34. Oil pump
35. Strainer
36. Oil cooler by-pass valve
37. 1–2 shift valve
38. Reverse clutch sequence valve
39. Intermediate modulator valve
40. Detent regulator valve
41. 2–3 shift valve
42. 3–4 shift valve

**TSB Revision**

## 2–2 (SECOND 2ND)

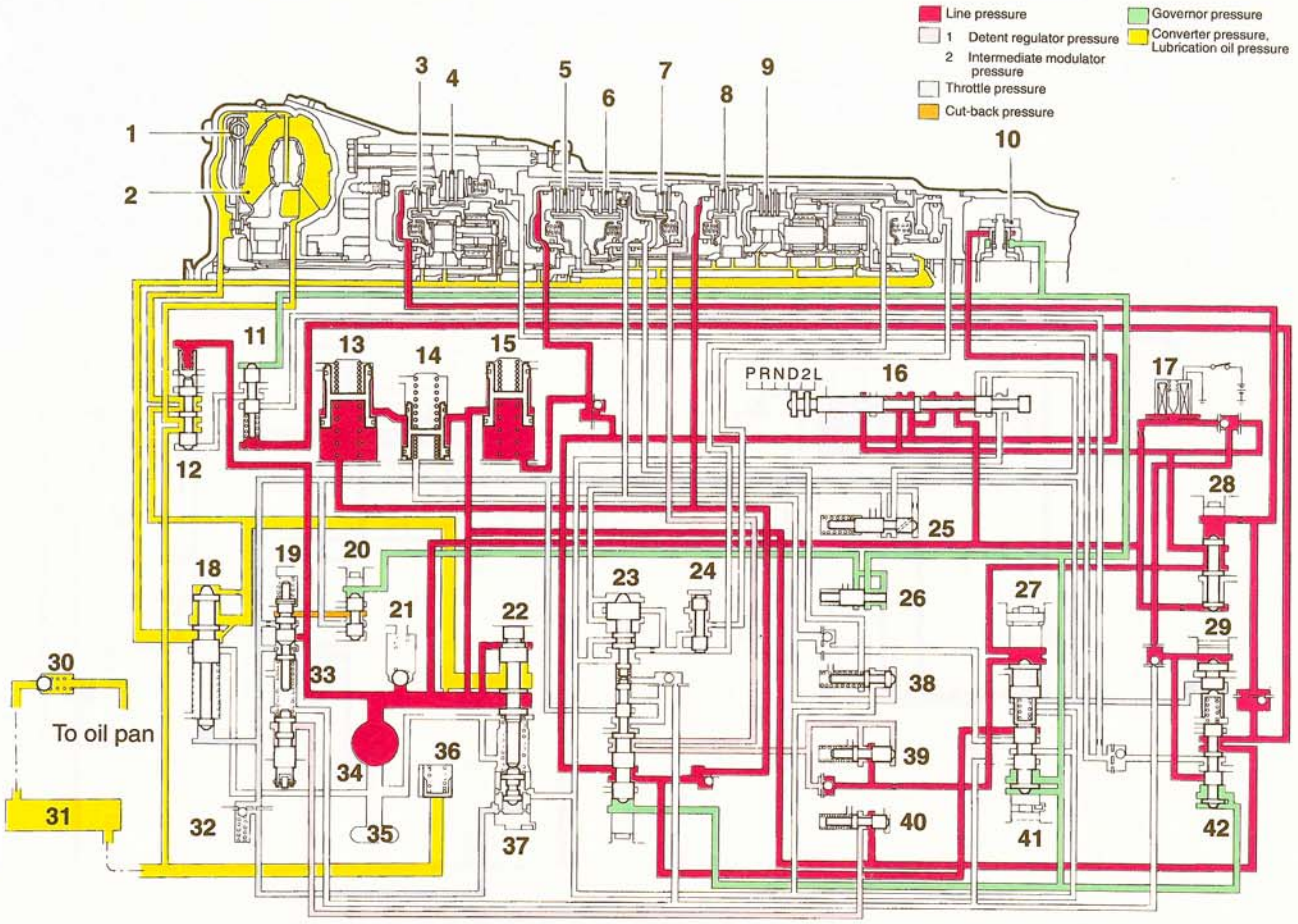


ZTRA0445

1. Lockup clutch
2. Torque converter
3. Overdrive clutch
4. Overdrive brake
5. Forward clutch
6. Direct clutch
7. Brake No. 1
8. Brake No. 2
9. Brake No. 3
10. Governor
11. Lockup signal valve
12. Lockup relay valve
13. Accumulator B2
14. Accumulator C2
15. Accumulator C1
16. Manual valve
17. OD solenoid valve
18. Secondary regulator valve
19. Throttle valve
20. Cut back valve
21. Pressure relief valve
22. Primary regulator valve
23. Low coast shift valve
24. Plug
25. Low coast modulator valve
26. Plug
27. Intermediate shift valve
28. D–2 down timing valve
29. Third coast shift valve
30. Oil cooler return ball
31. Oil cooler
32. Damping check ball
33. Down-shift plug
34. Oil pump
35. Strainer
36. Oil cooler by-pass valve
37. 1–2 shift valve
38. Reverse clutch sequence valve
39. Intermediate modulator valve
40. Detent regulator valve
41. 2–3 shift valve
42. 3–4 shift valve

**TSB Revision**

## L (LOCKUP)

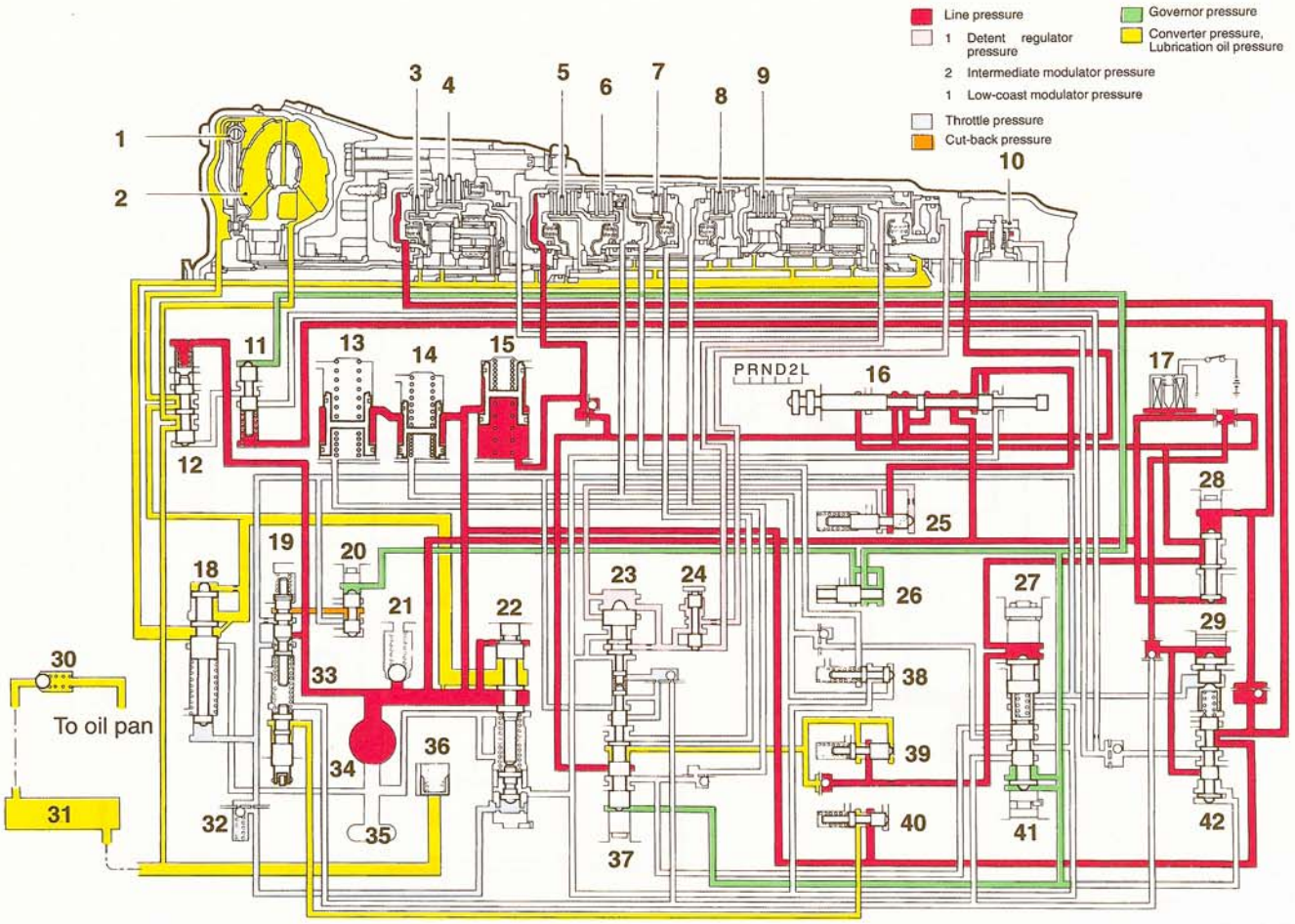


1. Lockup clutch
2. Torque converter
3. Overdrive clutch
4. Overdrive brake
5. Forward clutch
6. Direct clutch
7. Brake No. 1
8. Brake No. 2
9. Brake No. 3
10. Governor
11. Lockup signal valve
12. Lockup relay valve
13. Accumulator B2
14. Accumulator C2
15. Accumulator C1
16. Manual valve
17. OD solenoid valve
18. Secondary regulator valve
19. Throttle valve
20. Cut back valve
21. Pressure relief valve
22. Primary regulator valve
23. Low coast shift valve
24. Plug
25. Low coast modulator valve
26. Plug
27. Intermediate shift valve
28. D–2 down timing valve
29. Third coast shift valve
30. Oil cooler return ball
31. Oil cooler
32. Damping check ball
33. Down-shift plug
34. Oil pump
35. Strainer
36. Oil cooler by-pass valve
37. 1–2 shift valve
38. Reverse clutch sequence valve
39. Intermediate modulator valve
40. Detent regulator valve
41. 2–3 shift valve
42. 3–4 shift valve

**TSB Revision**

## R (REVERSE)

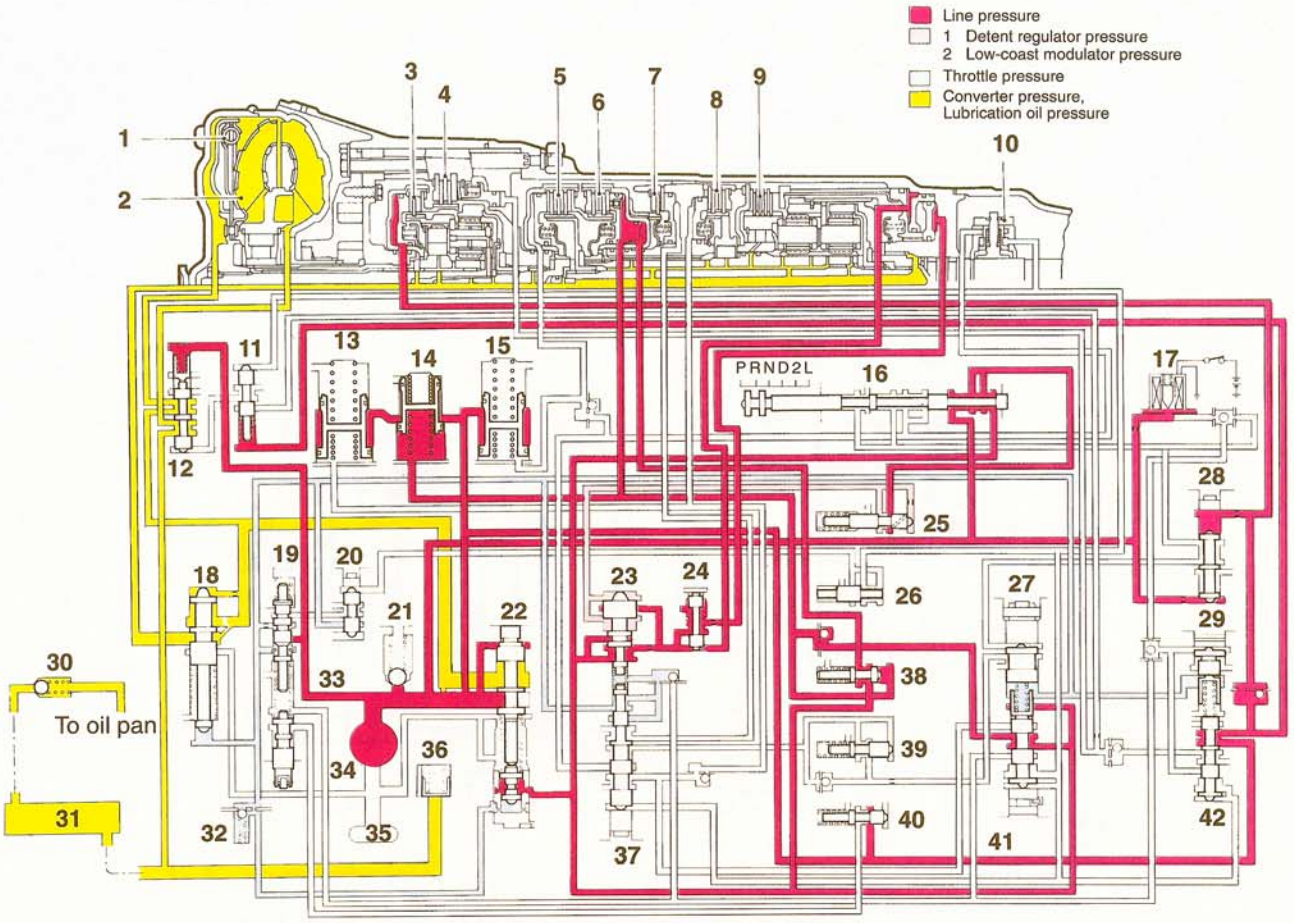


ZTRA0447

1. Lockup clutch
2. Torque converter
3. Overdrive clutch
4. Overdrive brake
5. Forward clutch
6. Direct clutch
7. Brake No. 1
8. Brake No. 2
9. Brake No. 3
10. Governor
11. Lockup signal valve
12. Lockup relay valve
13. Accumulator B2
14. Accumulator C2
15. Accumulator C1
16. Manual valve
17. OD solenoid valve
18. Secondary regulator valve
19. Throttle valve
20. Cut back valve
21. Pressure relief valve
22. Primary regulator valve
23. Low coast shift valve
24. Plug
25. Low coast modulator valve
26. Plug
27. Intermediate shift valve
28. D–2 down timing valve
29. Third coast shift valve
30. Oil cooler return ball
31. Oil cooler
32. Damping check ball
33. Down-shift plug
34. Oil pump
35. Strainer
36. Oil cooler by-pass valve
37. 1–2 shift valve
38. Reverse clutch sequence valve
39. Intermediate modulator valve
40. Detent regulator valve
41. 2–3 shift valve
42. 3–4 shift valve

**TSB Revision**

## HYDRAULIC CIRCUIT <V4AW3>

### R (REVERSE)

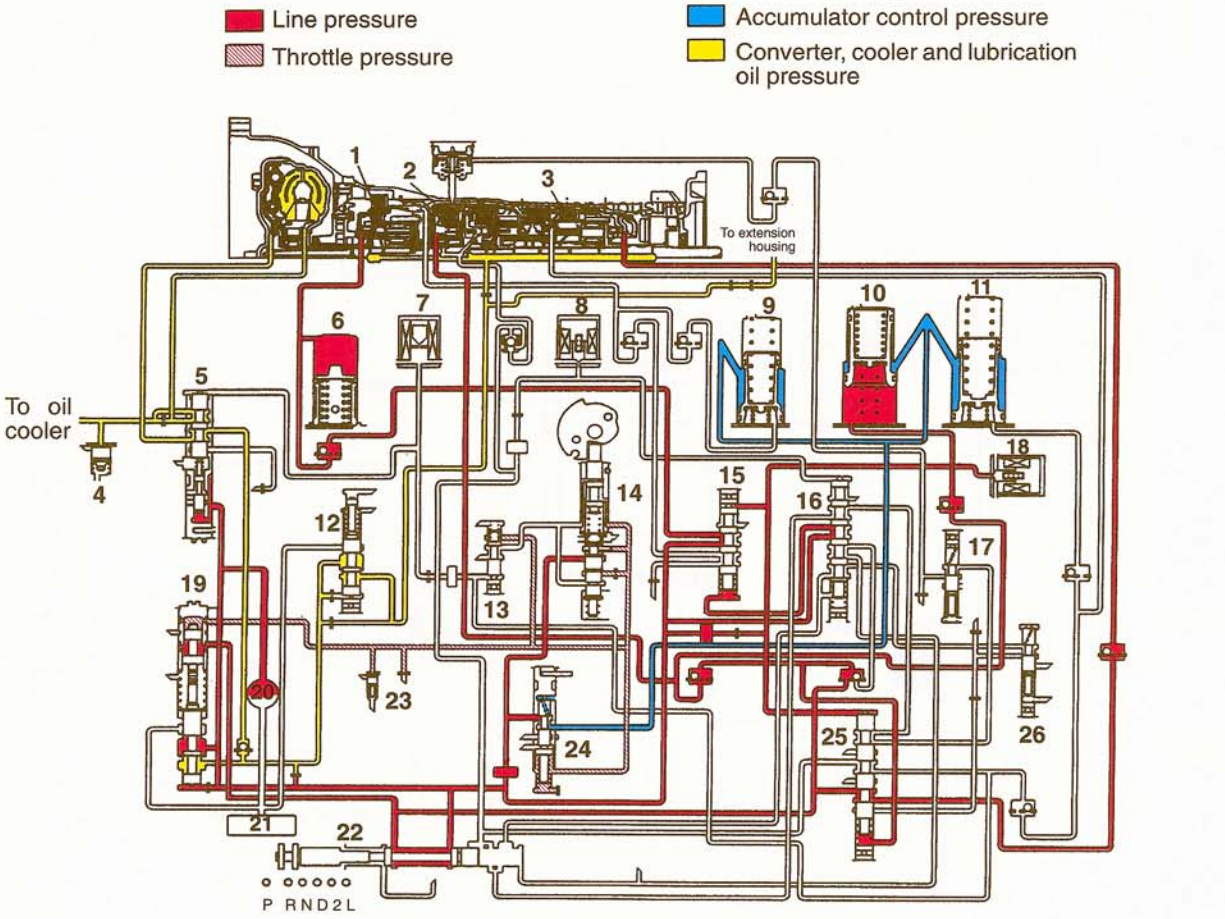


1. Overdrive direct clutch
2. Direct clutch
3. 1st & Rev. brake
4. Cooler by-pass valve
5. Torque converter clutch relay valve
6. C0 Accumulator
7. Lockup solenoid
8. Shift solenoid No. 1
9. B0 Accumulator
10. C2 Accumulator
11. B2 Accumulator
12. Secondary regulator valve
13. Cut back valve
14. Throttle valve
15. 3–4 shift valve
16. 2–3 shift valve
17. 2nd coast modulator valve
18. Shift solenoid No. 2
19. Primary regulator valve
20. Oil pump
21. Strainer
22. Manual valve
23. Pressure release
24. Accumulator control valve
25. 1–2 shift valve
26. Low coast modulator valve

**TSB Revision**

## D–1 (DRIVE 1ST)

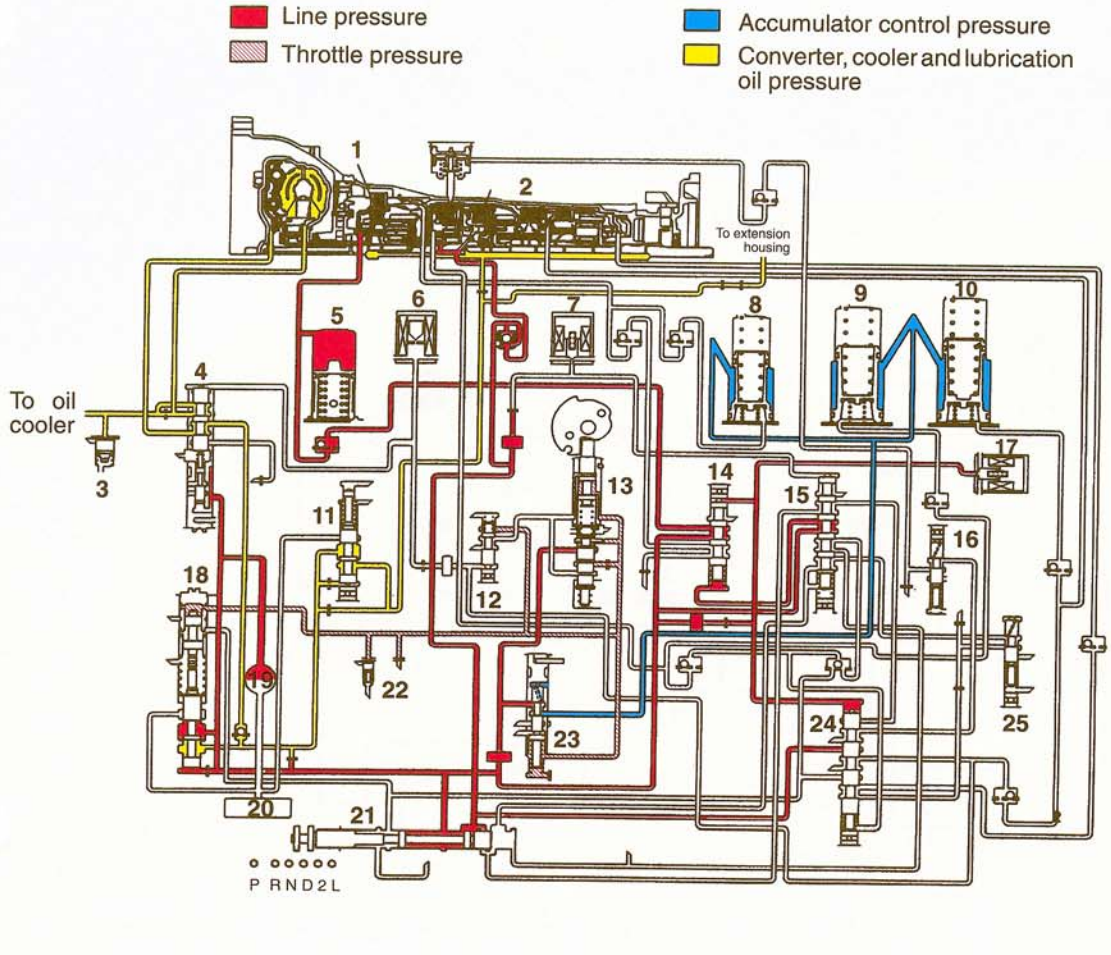


1. Overdrive direct clutch
2. Forward clutch
3. Cooler by-pass valve
4. Torque converter clutch relay valve
5. C0 Accumulator
6. Lockup solenoid
7. Shift solenoid No. 1
8. B0 Accumulator
9. C2 Accumulator
10. B2 Accumulator
11. Secondary regulator valve
12. Cut back valve
13. Throttle valve
14. 3–4 shift valve
15. 2–3 shift valve
16. 2nd coast modulator valve
17. Shift solenoid No. 2
18. Primary regulator valve
19. Oil pump
20. Strainer
21. Manual valve
22. Pressure release
23. Accumulator control valve
24. 1–2 shift valve
25. Low coast modulator valve

## D–2 (DRIVE 2ND)

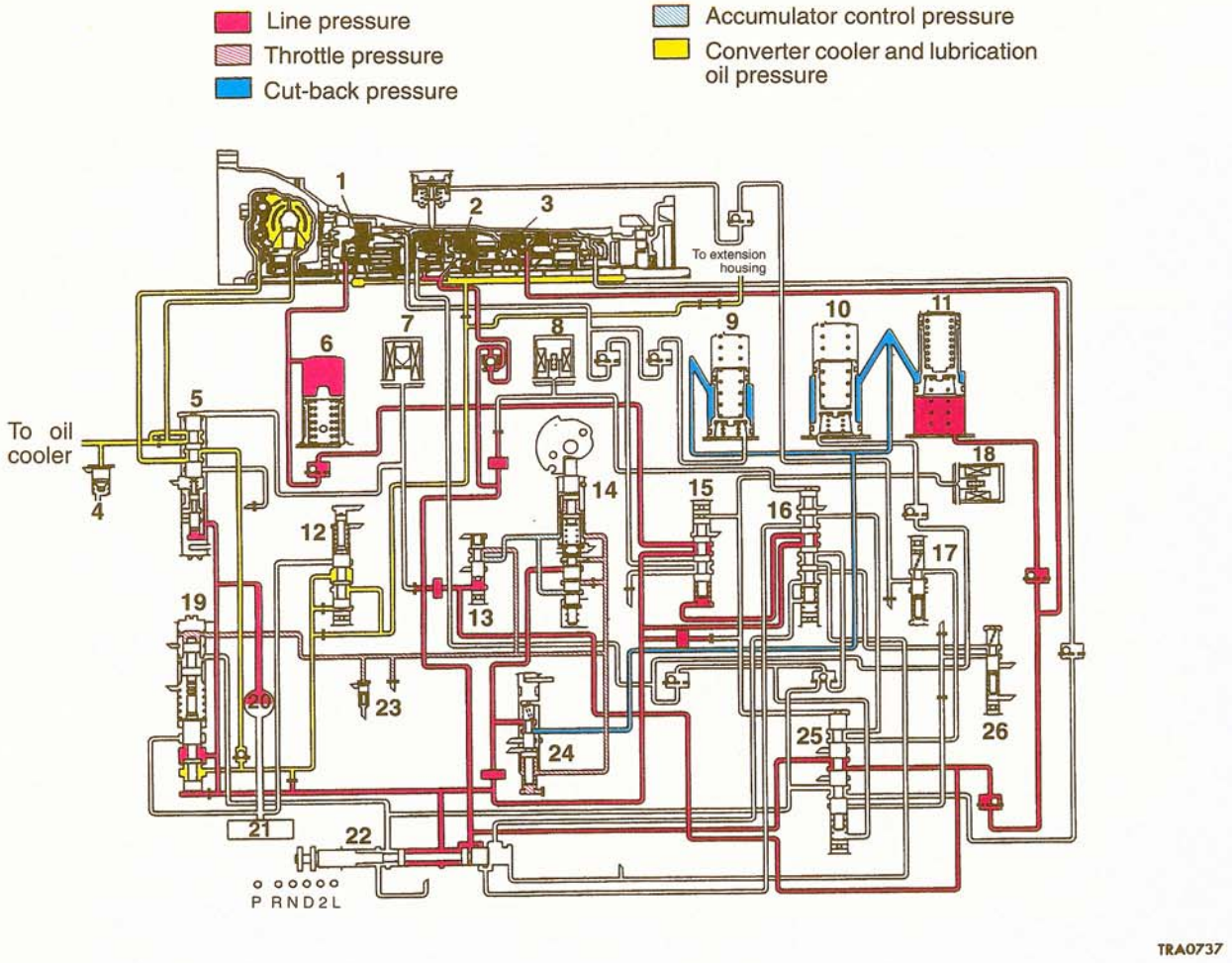


1. Overdrive direct clutch
2. Forward clutch
3. 2nd brake
4. Cooler by-pass valve
5. Torque converter clutch relay valve
6. C0 Accumulator
7. Lockup solenoid
8. Shift solenoid No. 1
9. B0 Accumulator
10. C2 Accumulator
11. B2 Accumulator
12. Secondary regulator valve
13. Cut back valve
14. Throttle valve
15. 3–4 shift valve
16. 2–3 shift valve
17. 2nd coast modulator valve
18. Shift solenoid No. 2
19. Primary regulator valve
20. Oil pump
21. Strainer
22. Manual valve
23. Pressure release
24. Accumulator control valve
25. 1–2 shift valve
26. Low coast modulator valve

## D–3 (DRIVE 3RD)

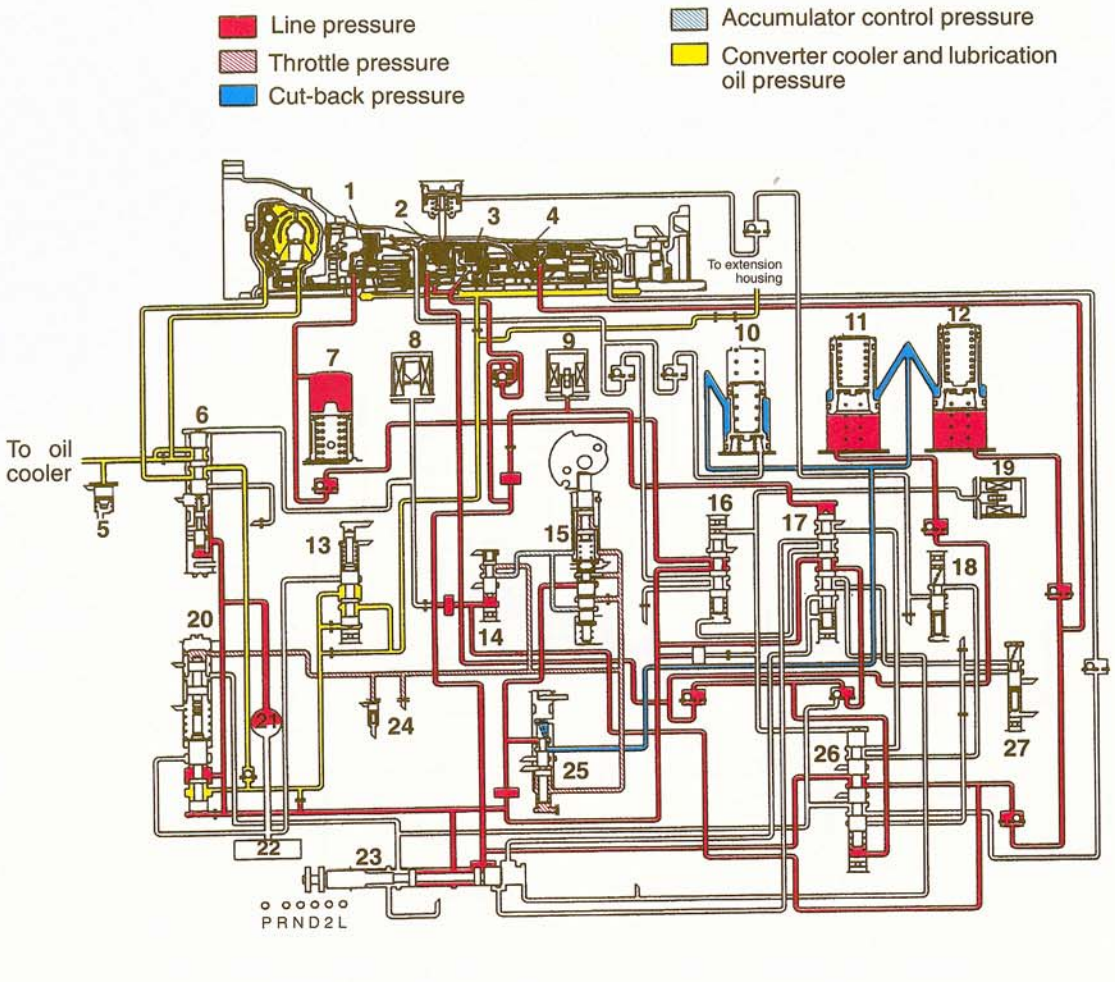


1. Overdrive direct clutch
2. Direct clutch
3. Forward clutch
4. 1st & Rev. brake
5. Cooler by-pass valve
6. Torque converter clutch relay valve
7. C0 Accumulator
8. Lockup solenoid
9. Shift solenoid No. 1
10. B0 Accumulator
11. C2 Accumulator
12. B2 Accumulator
13. Secondary regulator valve
14. Cut back valve
15. Throttle valve
16. 3–4 shift valve
17. 2–3 shift valve
18. 2nd coast modulator valve
19. Shift solenoid No. 2
20. Primary regulator valve
21. Oil pump
22. Strainer
23. Manual valve
24. Pressure release
25. Accumulator control valve
26. 1–2 shift valve
27. Low coast modulator valve

## D–4 (DRIVE 4TH) LOCK UP

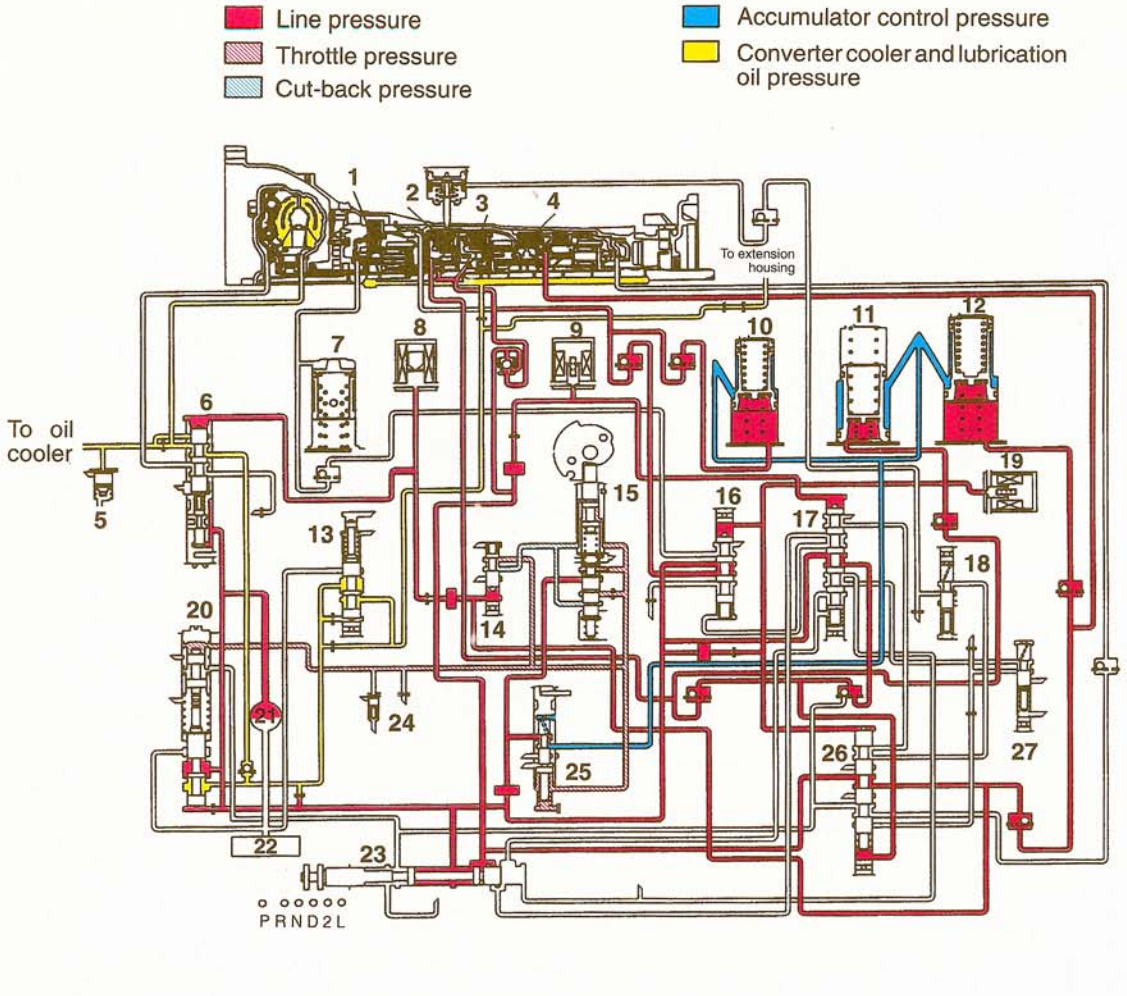


1. Overdrive direct clutch
2. Direct clutch
3. Forward clutch
4. 1st & Rev. brake
5. Cooler by-pass valve
6. Torque converter clutch relay valve
7. C0 Accumulator
8. Lockup solenoid
9. Shift solenoid No. 1
10. B0 Accumulator
11. C2 Accumulator
12. B2 Accumulator
13. Secondary regulator valve
14. Cut back valve
15. Throttle valve
16. 3–4 shift valve
17. 2–3 shift valve
18. 2nd coast modulator valve
19. Shift solenoid No. 2
20. Primary regulator valve
21. Oil pump
22. Strainer
23. Manual valve
24. Pressure release
25. Accumulator control valve
26. 1–2 shift valve
27. Low coast modulator valve

**TSB Revision**

## 2–1 (SECOND 1ST)

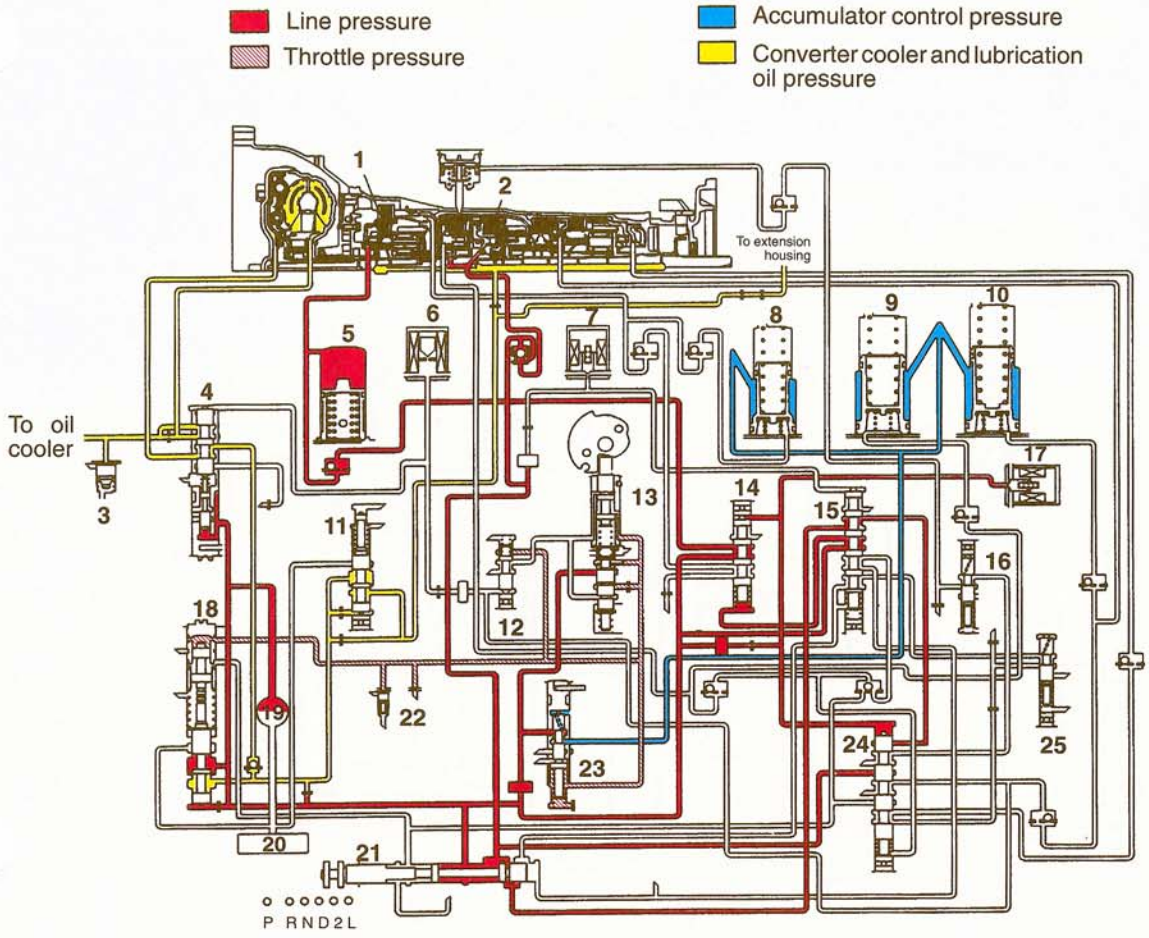


1. Overdrive direct clutch
2. Forward clutch
3. Cooler by-pass valve
4. Torque converter clutch relay valve
5. C0 Accumulator
6. Lockup solenoid
7. Shift solenoid No. 1
8. B0 Accumulator
9. C2 Accumulator
10. B2 Accumulator
11. Secondary regulator valve
12. Cut back valve
13. Throttle valve
14. 3–4 shift valve
15. 2–3 shift valve
16. 2nd coast modulator valve
17. Shift solenoid No. 2
18. Primary regulator valve
19. Oil pump
20. Strainer
21. Manual valve
22. Pressure release
23. Accumulator control valve
24. 1–2 shift valve
25. Low coast modulator valve

## 2–2 (SECOND 2ND)

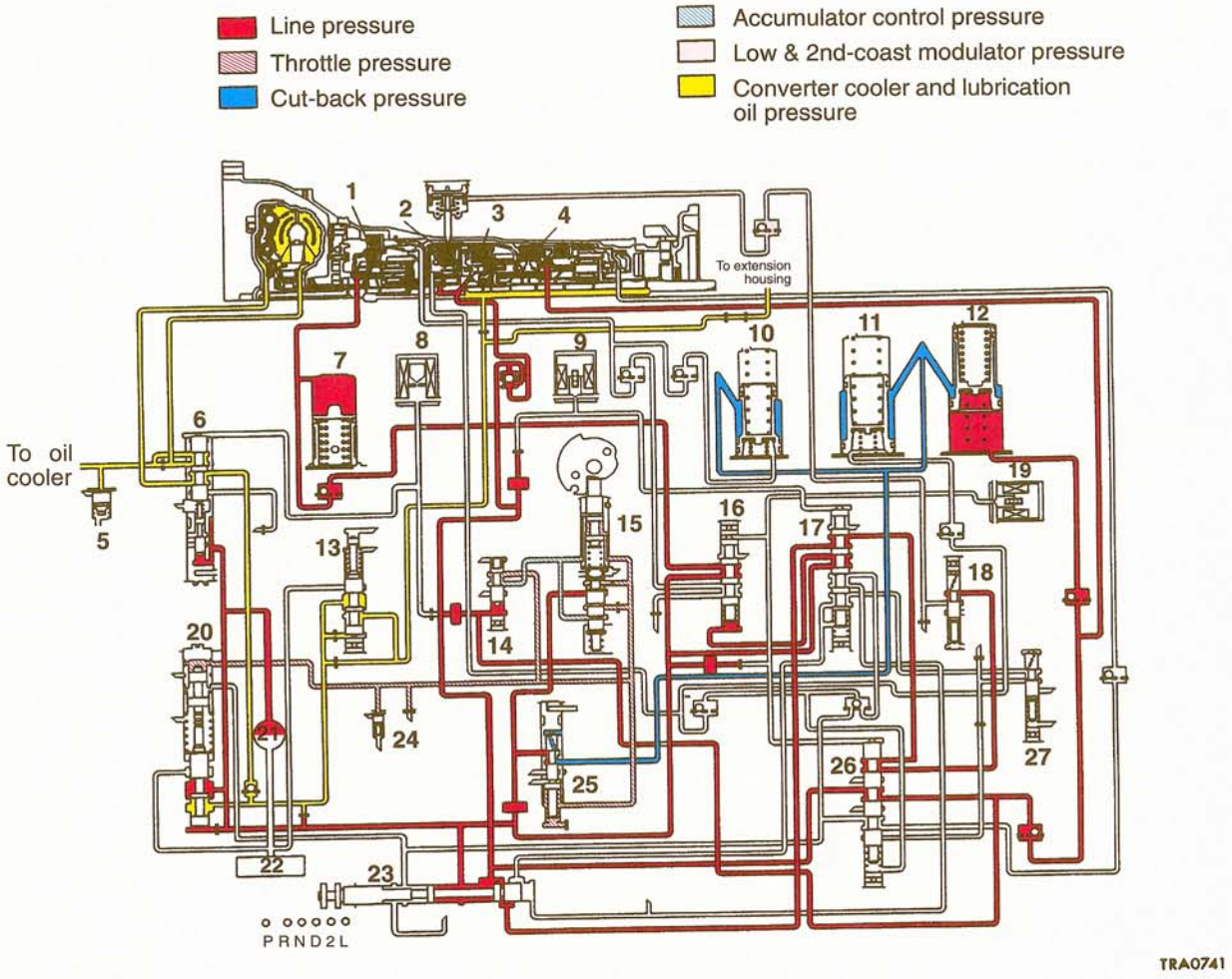


1. Overdrive direct clutch
2. Direct clutch
3. Forward clutch
4. 1st & Rev. brake
5. Cooler by-pass valve
6. Torque converter clutch relay valve
7. C0 Accumulator
8. Lockup solenoid
9. Shift solenoid No. 1
10. B0 Accumulator
11. C2 Accumulator
12. B2 Accumulator
13. Secondary regulator valve
14. Cut back valve
15. Throttle valve
16. 3–4 shift valve
17. 2–3 shift valve
18. 2nd coast modulator valve
19. Shift solenoid No. 2
20. Primary regulator valve
21. Oil pump
22. Strainer
23. Manual valve
24. Pressure release
25. Accumulator control valve
26. 1–2 shift valve
27. Low coast modulator valve

**TSB Revision**

## L (1ST)

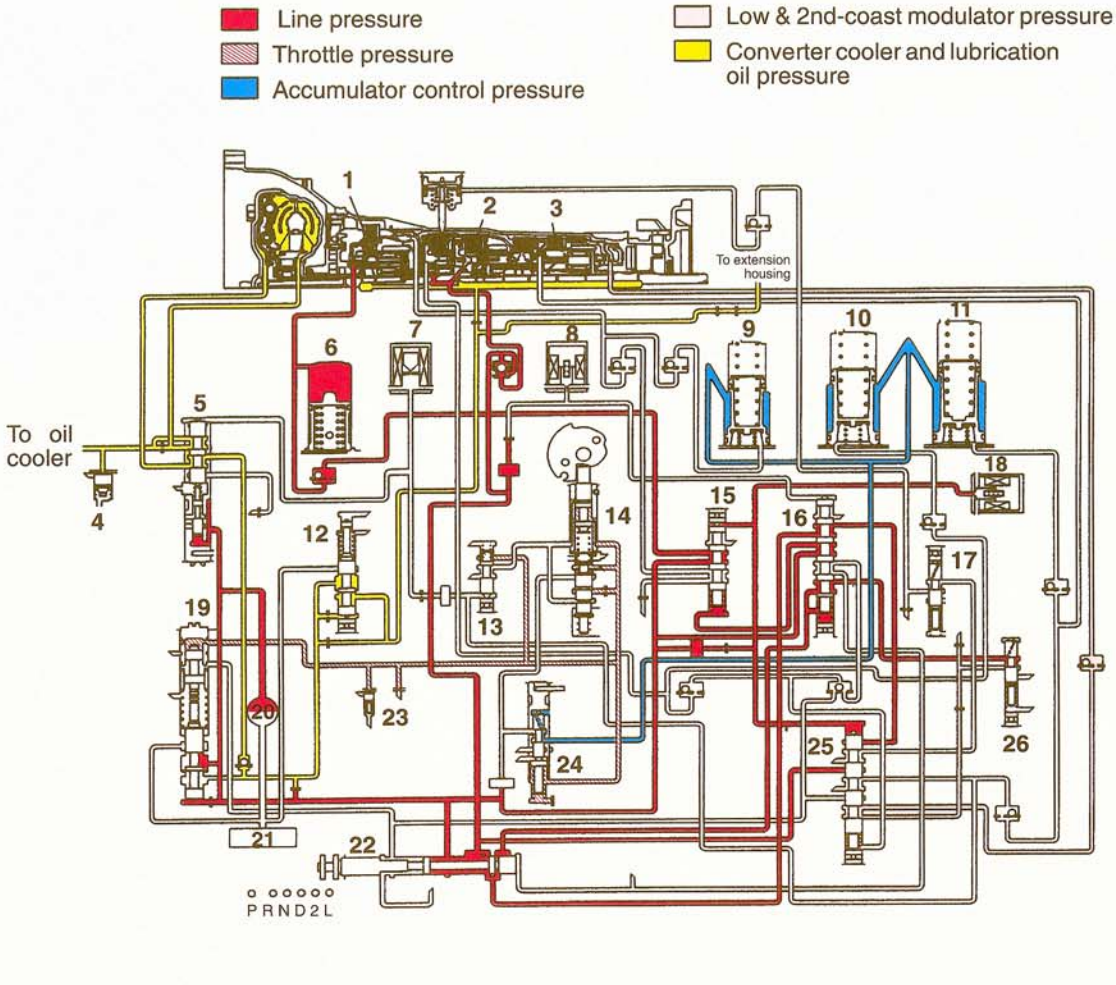


1. Overdrive direct clutch
2. Forward clutch
3. 1st & Rev. brake
4. Cooler by-pass valve
5. Torque converter clutch relay valve
6. C0 Accumulator
7. Lockup solenoid
8. Shift solenoid No. 1
9. B0 Accumulator
10. C2 Accumulator
11. B2 Accumulator
12. Secondary regulator valve
13. Cut back valve
14. Throttle valve
15. 3–4 shift valve
16. 2–3 shift valve
17. 2nd coast modulator valve
18. Shift solenoid No. 2
19. Primary regulator valve
20. Oil pump
21. Strainer
22. Manual valve
23. Pressure release
24. Accumulator control valve
25. 1–2 shift valve
26. Low coast modulator valve

# TRANSMISSION CONTROL

23100660070

## REMOVAL AND INSTALLATION

**Pre-removal and Post-installation Operation**
- Front Console Assembly Removal and Installation (Refer to GROUP 52A – Floor Console.)

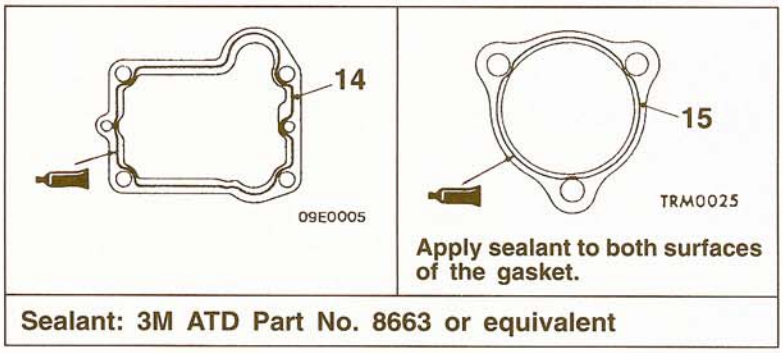


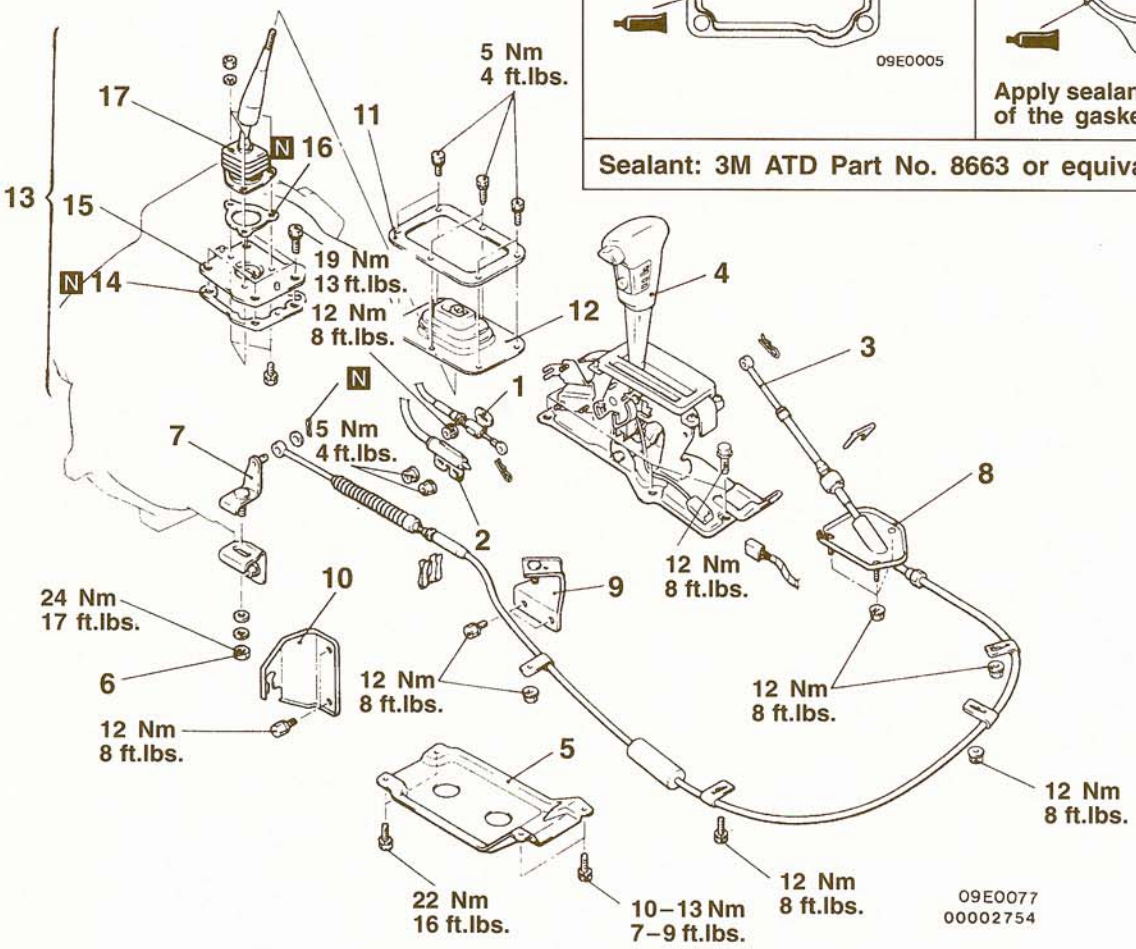


**Selector lever assembly removal steps**

- ▶G◀ 1. Key-interlock cable connection (Selector lever assembly side)
- ▶F◀ 2. Shift-lock cable connection (Selector lever assembly side)
- ▶E◀ 3. Transmission control cable connection (Selector lever assembly side)
- 4. Selector lever assembly

**Transmission control cable removal steps**

- ▶E◀ 3. Transmission control cable connection (Selector lever assembly side)
- 5. Transfer case protector
- 6. Transmission control cable assembly connection (transmission side)
- 7. Transmission control upper lever
- 8. Transmission control cable
- 9. Cable bracket
- 10. Cable end bracket

**Transfer control lever assembly removal steps**

- 11. Retainer
- 12. Control lever boot
- ◀A▶ ▶D◀ 13. Transfer control lever assembly
- 14. Gasket
- 15. Stopper plate
- 16. Gasket
- 17. Transfer control lever

**TSB Revision**

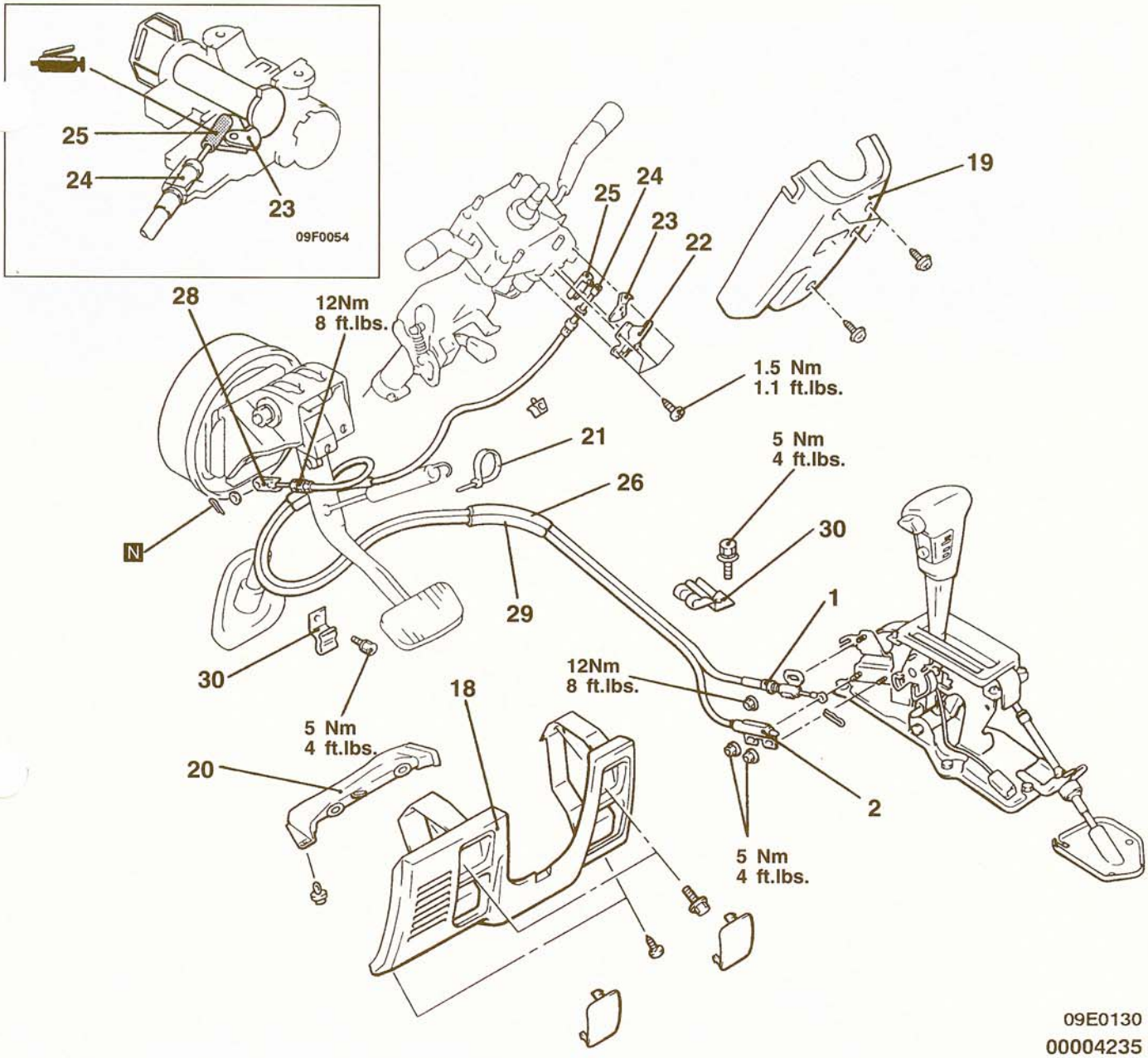


**Key-interlock cable removal steps**

- ▶G◀ 1. Key-interlock cable connection (Selector lever assembly side)
- 18. Instrument panel under cover
- 19. Column cover lower
- 20. Foot shower duct (left side)
- ▶C◀ 21. Cable band
- 22. Cover
- ▶B◀ 23. Cam lever
- ▶B◀ 24. Key-interlock cable connection (Steering lock assembly side)
- ▶B◀ 25. Slide lever
- 26. Key-interlock cable
- 27. Cable guide
- 30. Clamp

**Shift lock cable removal steps**

- ▶F◀ 2. Shift lock cable connection (Selector lever assembly side)
- 18. Instrument panel under cover
- 19. Column cover lower
- 20. Foot shower duct (left side)
- ▶C◀ 21. Cable band
- ▶A◀ 28. Shift lock cable connection (Brake pedal side)
- 29. Shift lock cable
- 30. Clamp

**TSB Revision**

## REMOVAL SERVICE POINT

### ◀A▶ TRANSFER CONTROL LEVER ASSEMBLY REMOVAL

When removing the transfer control lever assembly, mc the transfer control lever to the 2H (2 wheel drive-high range) position.

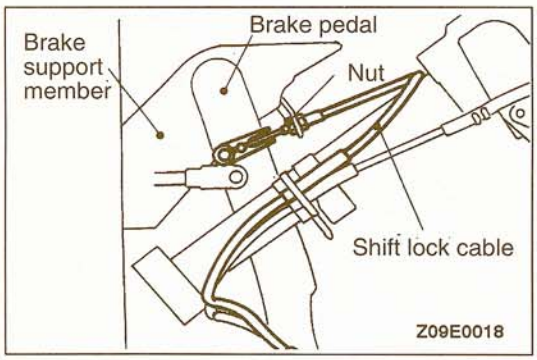


## INSTALLATION SERVICE POINTS

### ▶A◀ SHIFT LOCK CABLE CONNECTION (BRAKE PEDAL SIDE)

(1) Install the shift lock cable to the brake pedal, and clamp the brake support member with the nut.
(2) Route the shift lock cable correctly.

**Caution**
**Do not change the routing of the shift lock cable to the selector lever assembly.**

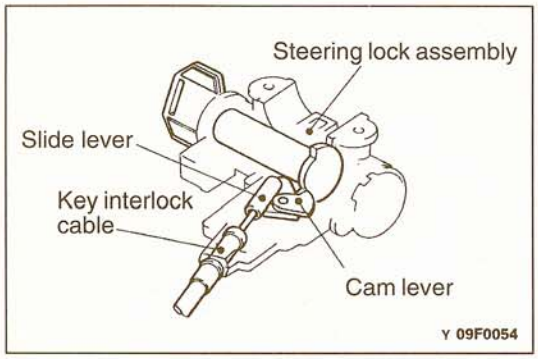


### ▶B◀ SLIDE LEVER/KEY INTERLOCK CABLE (STEERING LOCK ASSEMBLY SIDE)/CAM LEVER INSTALLATION

(1) Place the ignition key at the LOCK position or keep it removed.
(2) Install the slide lever, key interlock cable and cam lev to the steering lock assembly as shown in the illustration.

**Caution**
**Do not change the routing of the key interlock cable to the selector lever assembly.**

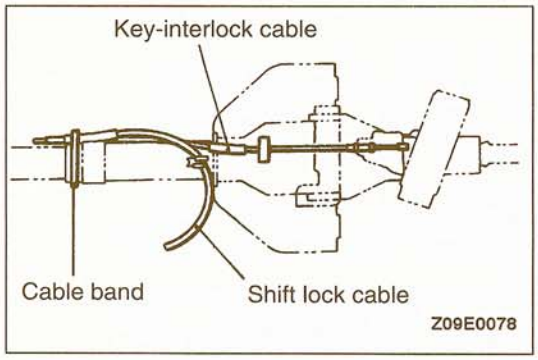


### ▶C◀ CABLE BAND INSTALLATION

Place the shift lock cable and key interlock cable as shown in the illustration, and clamp them with the cable band.

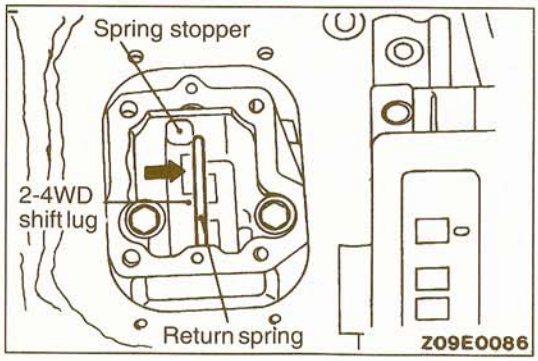


### ▶D◀ TRANSFER CONTROL LEVER ASSEMBLY INSTALLATION

(1) Remove the adhesive which is sticking to the transfer control lever assembly mounting bolts.
(2) Use a tap (M8×1.25) to remove the adhesive which is sticking to the screw mounting holes in the transfer control lever assembly.
(3) Check that the return spring is set to the spring stopper of the 2-4WD shift lug, and then install the control lever in the position shown by the arrow.
(4) Apply specified adhesive to the threads of the le assembly mounting bolts, and then tighten the trans control lever.

**Specified adhesive:**
**3M Stud Locking No. 4170 or equivalent**

**TSB Revision**

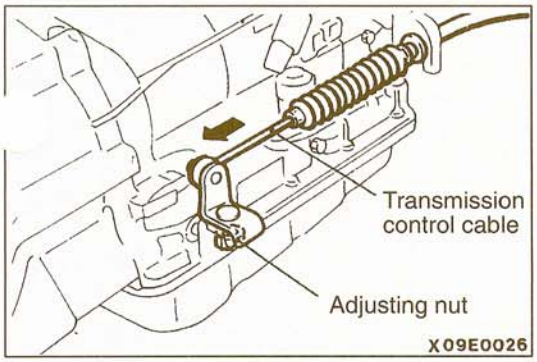


### ▶E◀ TRANSMISSION CONTROL CABLE INSTALLATION (SELECTOR LEVER ASSEMBLY SIDE)

After installing the transmission control cable, adjust it by the following procedure.
(1) Move the selector lever to the N position.
(2) Loosen the adjusting nut, gently pull the end of the transmission control cable in the direction of the arrow and then tighten the adjusting nut to the specified torque.

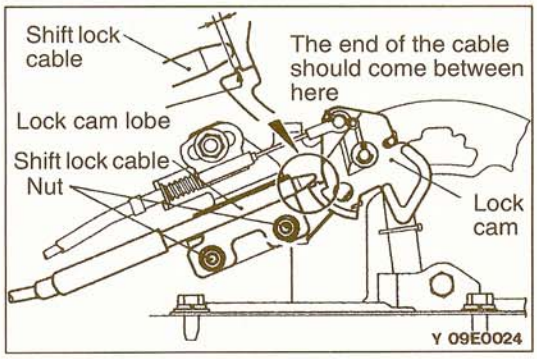


### ▶F◀ SHIFT LOCK CABLE INSTALLATION (SELECTOR LEVER ASSEMBLY SIDE)

(1) Move the selector lever to the P position.
(2) Adjust the shift lock cable so that the end of the cable (red mark) is at the position shown in the illustration, and then tighten the nut to the specified torque to clamp the shift lock cable.
(3) After installing the shift lock cable, check the shift lock mechanism. (Refer to P.23-47.)

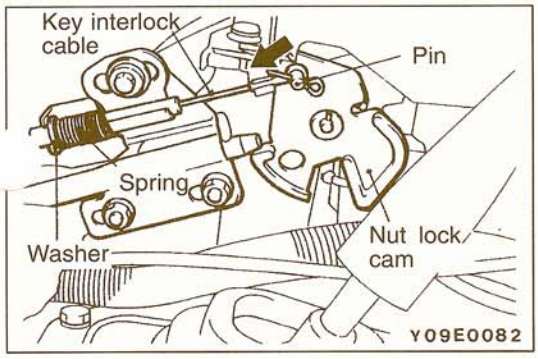


### ▶G◀ KEY INTERLOCK CABLE INSTALLATION (SELECTOR LEVER ASSEMBLY SIDE)

(1) Move the selector lever to the P position.
(2) Install the spring and washer that are inserted onto the key interlock cable as shown in the illustration.
(3) Gently push the lock cam until the pin stops in the direction of the arrow, and then tighten the nut to the specified torque to clamp the key interlock cable.
(4) After installing the key interlock cable, check the key interlock mechanism. (Refer to P.23-46.)

## INSPECTION

23100670028

- Check the transmission control cable assembly for function and for damage.
- Check the outer cable (key interlock cable, shift lock cable) for damage and check the spring for breakage and correct tension.
- Check the inner cable (key interlock cable, shift lock cable) for elongation.

# SELECTOR LEVER ASSEMBLY

23100680069

## DISASSEMBLY AND REASSEMBLY

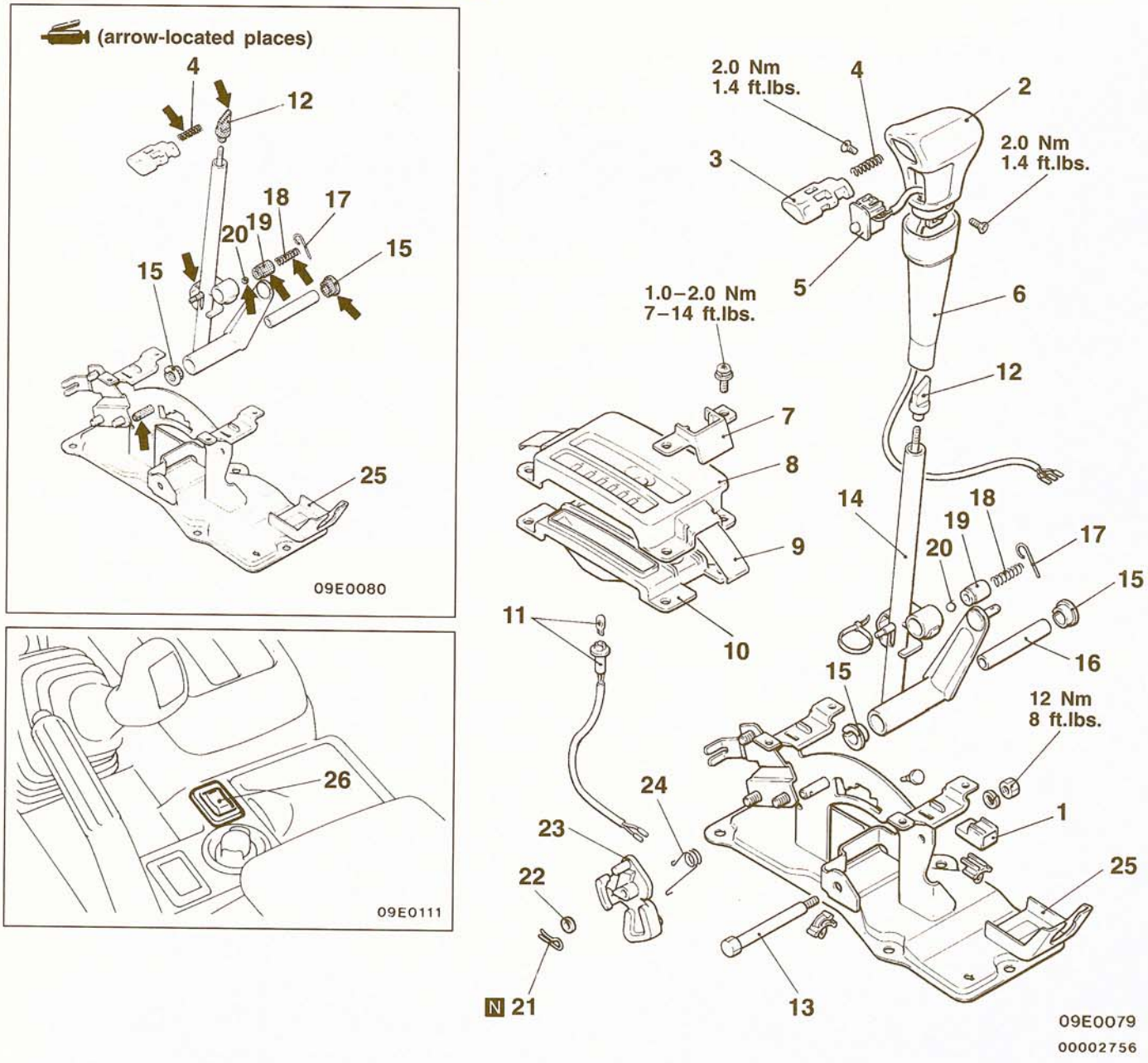


**Removal steps**

◀A▶ 1. Overdrive switch/position light switch connector case
◀B▶ 2. Selector knob
3. Push button
4. Spring
◀C▶ 5. Overdrive switch
6. Knob cover
7. Guide
8. Upper panel
9. Slider
10. Lower panel
11. Position indicator light assembly
▶A◀ 12. Sleeve
13. Bolt
14. Selector lever assembly
15. Bushing
16. Pipe
17. Pin
18. Spring
19. Support
20. Steel ball
21. Snap pin
22. Washer
23. Lock cam
24. Spring
25. Bracket assembly
26. Pattern select switch (3.0L-24 VALVE engine, 3.5L engine)

TSB Revision

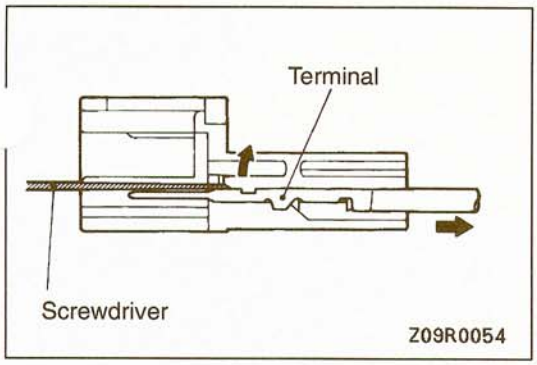


## DISASSEMBLY SERVICE POINTS

### ◀A▶ OVERDRIVE SWITCH/POSITION LIGHT SWITCH CONNECTOR CASE REMOVAL

Use a flat-tip (–) screwdriver or similar tool to remove the overdrive switch/position light connector case from the terminal.

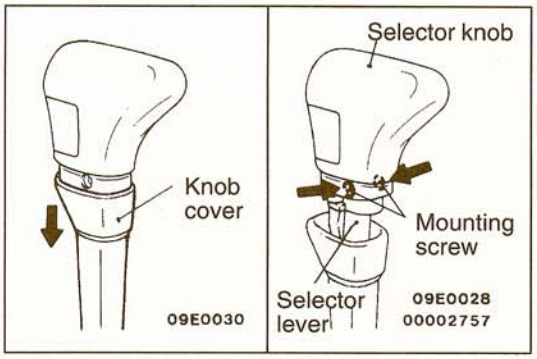


### ◀B▶ SELECTOR KNOB REMOVAL

(1) Press the knob cover downwards.
(2) Remove the front and back mounting screws, and then remove the selector knob from the selector lever.

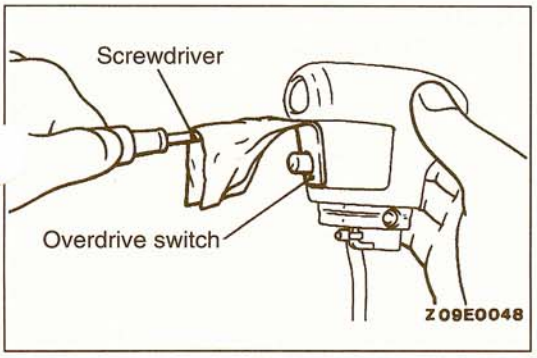


### ◀C▶ OVERDRIVE SWITCH REMOVAL

Use a flat-tip (–) screwdriver or similar tool to remove the overdrive switch.

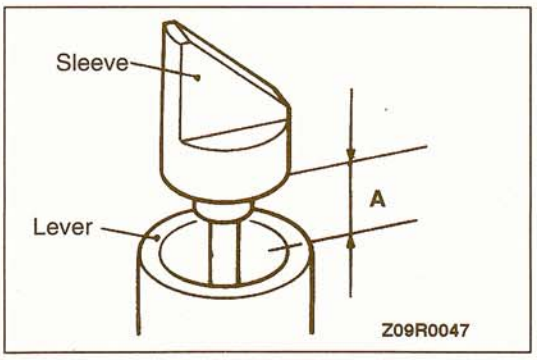


## REASSEMBLY SERVICE POINTS

### ▶A◀ SLEEVE INSTALLATION

Move the selector lever to the N position and adjust the sleeve by turning it so that the distance A between the sleeve and the tip of the lever is at the standard value.

**Standard value (A): 18.2–18.9 mm (.717–.744 in.)**

## INSPECTION

23100690048

- Check the detent plate for wear.
- Check the bushing for wear or damage.
- Check the spring for damage or deterioration.

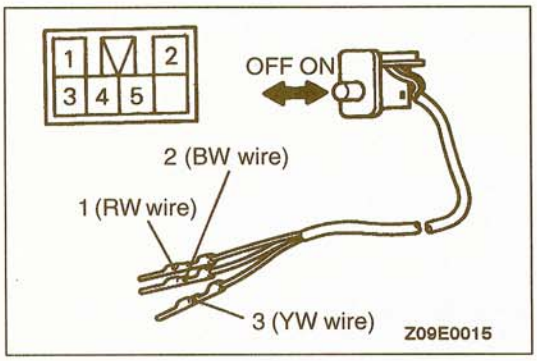


### OVERDRIVE SWITCH

Check for continuity between the terminals when the switch is turned off and on.

| Switch position | Terminal | | |
|---|---|---|---|
| | 3 | 4 | 5 |
| O.D. ON | ○ | | ○ |
| O.D. OFF | ○ | ○ | |

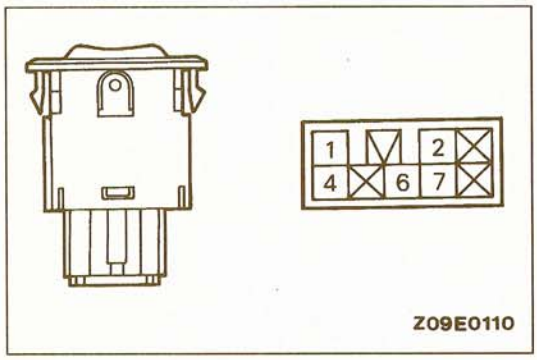


### PATTERN SELECT SWITCH (3.0L-24 VALVE engine, 3.5L engine)

| Switch position | Terminal | | | | | |
|---|---|---|---|---|---|---|
| | 1 | 2 | 6 | 4 | | 7 |
| HOLD | ○ | ○ | | ○ | ○ | ○ |
| POWER | ○ | | ○ | | | |

# TRANSMISSION FLUID COOLER, HOSES AND PIPES

23100710041

## REMOVAL AND INSTALLATION

**Pre-removal and Post-installation Operations**
- Under Cover and Under Skid Plate Removal and Installation
- Automatic Transmission Fluid Bleeding and Supplying. (Refer to GROUP 00 – Maintenance Service.)

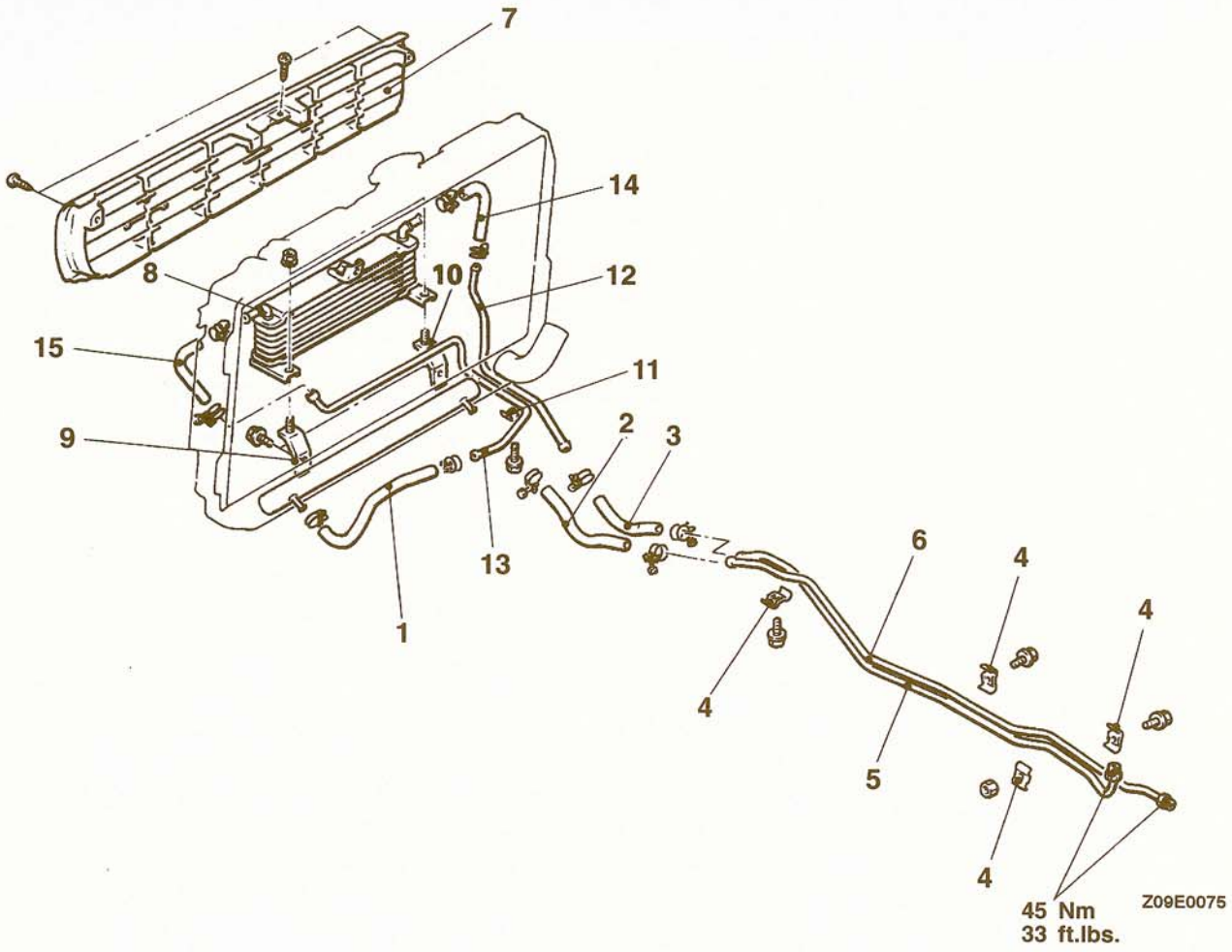


▶C◀ 1. Hose A
▶C◀ 2. Hose B
▶C◀ 3. Hose C

**Feed pipe A and return pipe A removal steps**

▶B◀ 4. Clamp
▶B◀ 5. Feed pipe A
▶B◀ 6. Return pipe A

**Fluid cooler assembly removal steps**

7. Radiator grille
8. Fluid cooler assembly
9. Fluid cooler bracket (L.H.)
10. Fluid cooler bracket (R.H.)

**Feed pipe B and return pipe B removal steps**

7. Radiator grille
11. Clamp
▶A◀ 12. Feed pipe B
▶A◀ 13. Return pipe B

**Hose D and hose E removal steps**

7. Radiator grille
▶A◀ 14. Hose D
▶A◀ 15. Hose E

**TSB Revision**

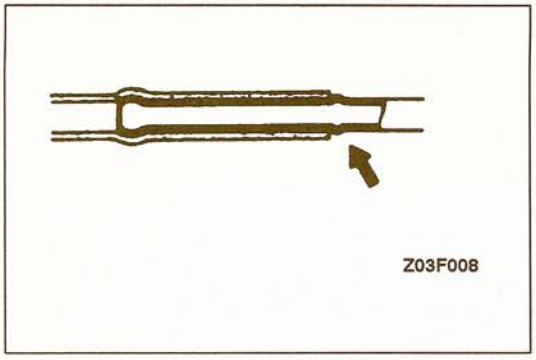


## INSTALLATION SERVICE POINTS

### ▶A◀ HOSE E/HOSE D/RETURN PIPE B/FEED PIPE B INSTALLATION

When connecting hoses to pipes with a stepped part, insert securely as far as the stepped part.

### ▶B◀ RETURN PIPE A/FEED PIPE A/CLAMP INSTALLATION

(1) Provisionally tighten the return pipe A and feed pipe A flare nuts to the transmission and transfer, and after clamping the pipes with each clamp, fully tighten the flare nuts.
Also, tighten all of the clamps, starting with those that are the closest to the transmission and transfer assembly.
(2) When connecting the pipes to the hoses, insert securely as far as the stepped part.

### ▶C◀ HOSE C/HOSE B/HOSE A INSTALLATION

When connecting the pipes to the hoses, insert securely as far as the stepped part.

## INSPECTION

23100720037

- Check the hose and pipe for crack, damage and clogging.
- Check for rusted or clogged radiator oil cooler.
- Check the fluid cooler fins for bends, damage or foreign materials.

TSB Revision

# TRANSMISSION AND TRANSFER ASSEMBLY

23100630019

## REMOVAL AND INSTALLATION

<3.0L-12 VALVE engine>

**Pre-removal and Post-installation Operation**
- Transfer Control Lever Assembly Removal and Installation (Refer to P.23A-82.)
- Transfer Case Protector Removal and Installation
- Front Exhaust Pipe Removal and Installation
- Automatic Transmission Fluid Draining and Supplying (Refer to GROUP 00 – Maintenance Service.)
- Transfer Oil Draining and Supplying (Refer to GROUP 00 – Maintenance Service.)
- Front and Rear Propeller Shaft Removal and Installation (Refer to GROUP 25 – Propeller Shaft.)

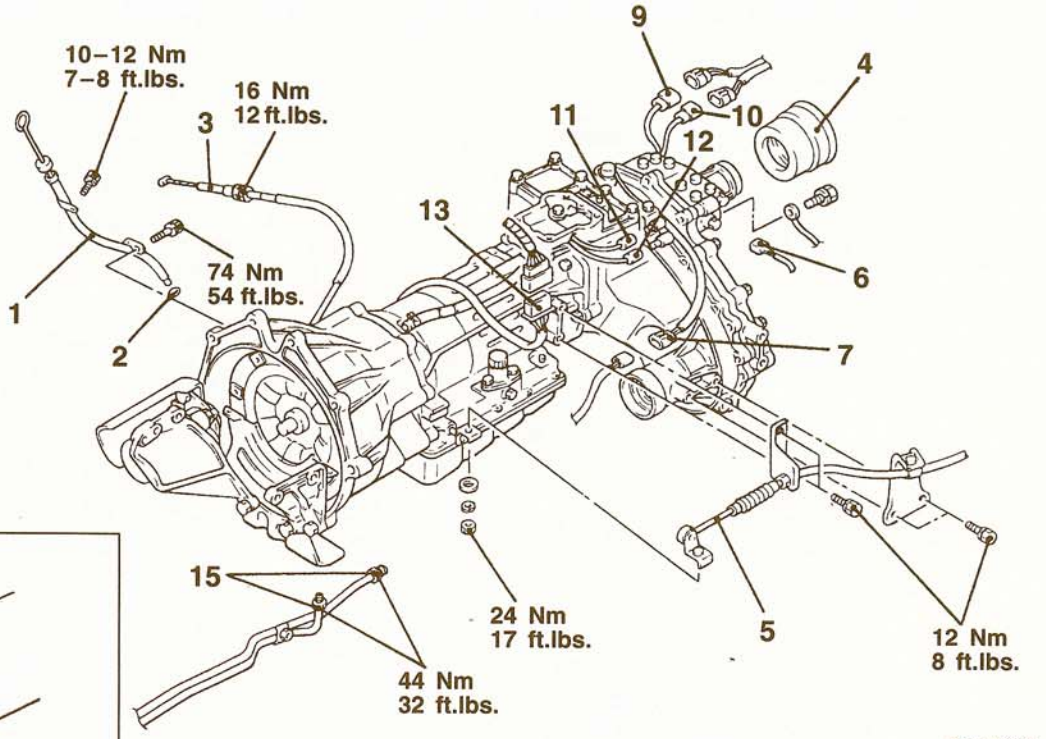


09E0132

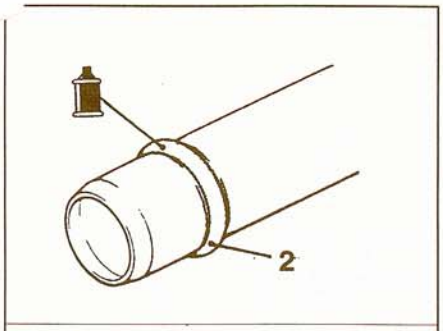


**Fluid:**
**DIAMOND ATF SP , ATF DEXRON II or equivalent**

00004240

**Removal steps**

1. Fluid filler pipe
2. O-ring
- ▶D◀ 3. Throttle cable connection
4. Dust seal guard
- ▶C◀ 5. Transmission control cable connection
6. Speed sensor connector
7. High range/Low range detection switch connector
9. 4WD operation detection switch connector
10. Center differential lock operation detection switch connector
11. Center differential lock detection switch connector
12. 2WD/4WD detection switch connector
13. Park/Neutral position switch connector
15. Fluid cooler pipe connection

**TSB Revision**

| | Nm | ft.lbs. | O.D. × Length mm (in.) | Bolt identification |
|---|---|---|---|---|
| A | 75 | 54 | "7" 12 × 40 (.5 × 1.6) | "7" D × L |
| B | 88 | 65 | "7" 12 × 55 (.5 × 2.2) | |
| C | 30 | 22 | "7" 10 × 55 (.4 × 2.2) | |
| D | 35 | 26 | "7" 10 × 40 (.4 × 1.6) | |
| E | 74 | 54 | "7" 12 × 35 (.5 × 1.4) | |
| F | 41 | 31 | "7" 10 × 30 (.4 × 1.2) | |
| G | 74 | 54 | "7" 12 × 50 (.5 × 2.0) | "7" D × L |

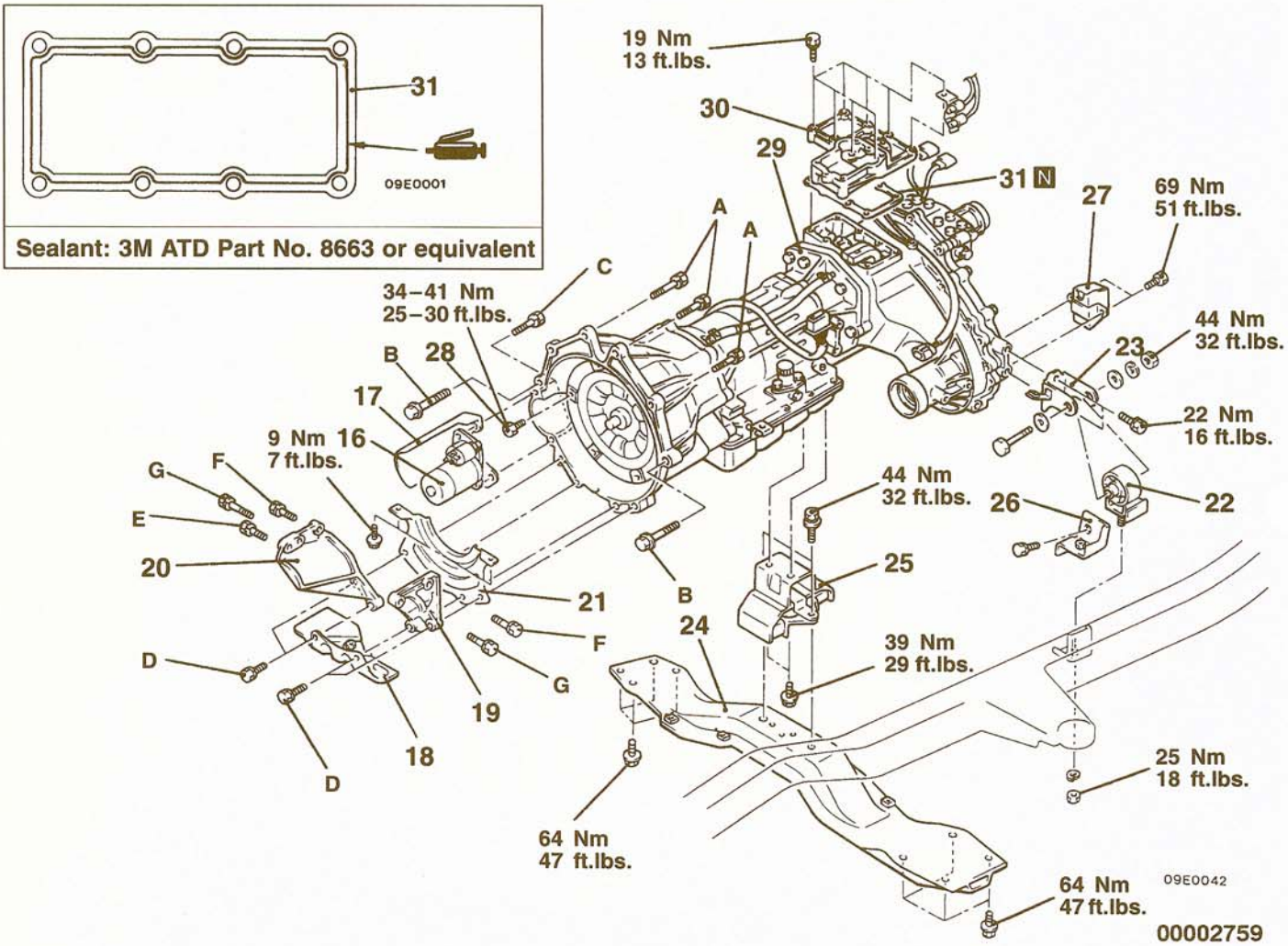


16. Starter motor
17. Starter cover
18. Heat protector
19. Transmission stay (L.H.)
20. Transmission stay (R.H.)
21. Bell housing cover
◀A▶ 22. Transfer roll stopper
23. Transfer mounting bracket
24. No. 2 crossmember
25. Engine mount rear insulator
26. Transfer case protector bracket
◀B▶ 27. Mass damper
◀B▶ 28. Torque converter connecting bolt
▶B◀ 29. Transmission and transfer assembly
▶A◀ 30. Control housing
31. Gasket

TSB Revision 96-23-011

## <3.0L-24VALVE engine, 3.5L engine>

**Pre-removal and Post-installation Operation**
- Transfer Control Lever Assembly Removal and Installation (Refer to P.23A-82.)
- Front Exhaust Pipe Removal and Installation
- Automatic Transmission Fluid Draining and Supplying (Refer to GROUP 00 – Maintenance Service.)
- Transfer Oil Draining and Supplying (Refer to GROUP 00 – Maintenance Service.)
- Front and Rear Propeller Shaft Removal and Installation (Refer to GROUP 25 – Propeller Shaft.)

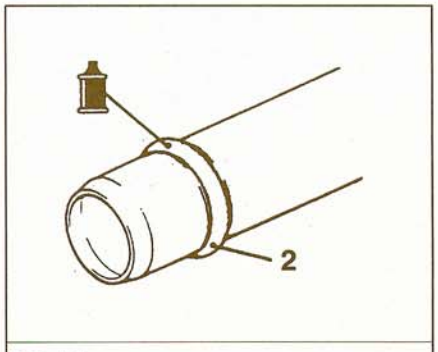


**Fluid:**
**DIAMOND ATF SP, ATF DEXRON II or equivalent**

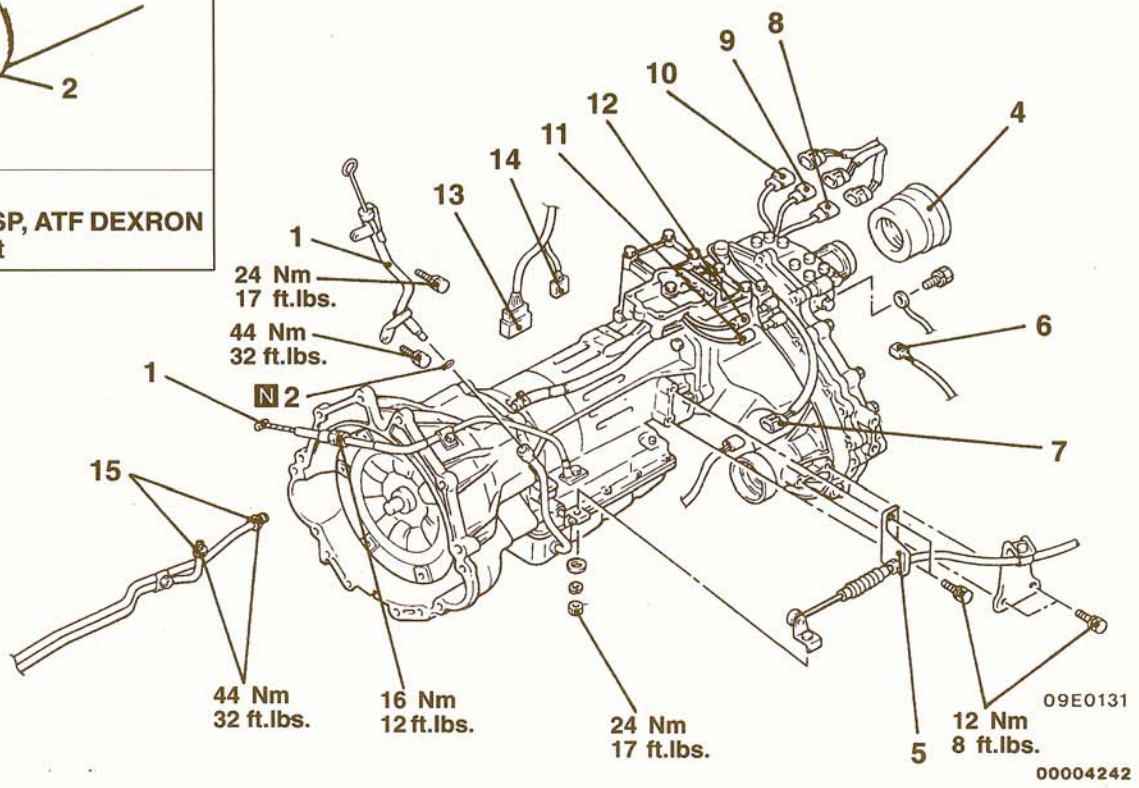


**Removal steps**
1. Fluid filler pipe
2. O-ring
3. ▶D◀ Throttle cable connectin
4. Dust seal guard
5. ▶C◀ Transmission control cable connection
6. Speed sensor connector
7. High range/Low range detection switch connector
8. Low range operation detection switch
9. 4WD operation detection switch connector
10. Center differential lock operation detection switch connector
11. Center differential lock detection switch connector
12. 2WD/4WD detection switch connector
13. Park/Neutral position switch connector
14. Solenoid valve connector
15. Connection for fluid cooler pipe

**TSB Revision**

| | Nm | ft.lbs. | O.D. × Length mm (in.) | Bolt identification |
|---|---|---|---|---|
| A | 74 | 54 | "7" 12 × 40 (.5 × 1.6) | "7" D × L 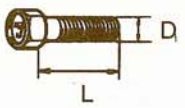 Z09Y512 |
| B | 88 | 65 | "7" 12 × 55 (.5 × 2.2) | |
| C | 30 | 22 | "7" 10 × 55 (.4 × 2.2) | |
| D | 35 | 26 | "7" 10 × 40 (.4 × 1.6) | |

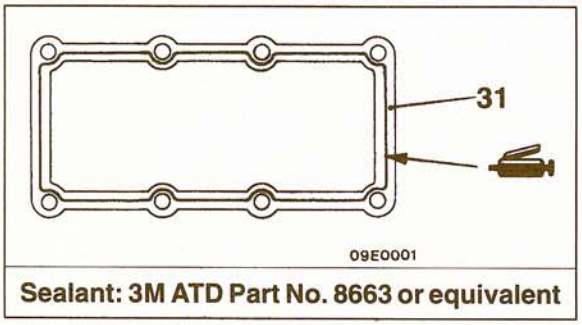


Sealant: 3M ATD Part No. 8663 or equivalent




16. Starter motor
17. Starter cover
18. Heat protector
24. No. 2 crossmember
26. Engine rear mount bracket
27. Mass damper

◀B▶ ◀B▶ ▶B◀ 28. Torque converter connecting bolt
29. Transmission and transfer assembly
▶A◀ 30. Control housing
31. Gasket

TSB Revision

## REMOVAL SERVICE POINTS

### ◀A▶ TRANSFER ROLL STOPPER REMOVAL

Before removing the transfer roll stopper, support the transmission and transfer assembly with a transmission jack.

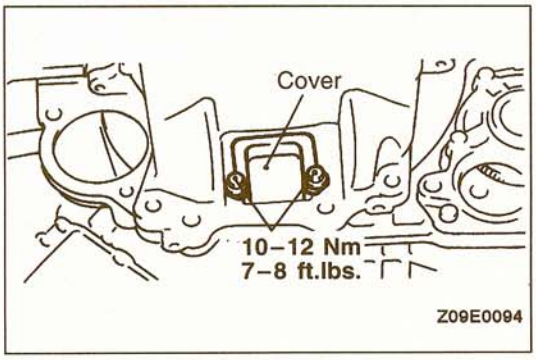


### ◀B▶ TORQUE CONVERTER CONNECTING BOLT/ TRANSMISSION AND TRANSFER ASSEMBLY REMOVAL

(1) Remove the cover from the oil pan upper. <3.0L-24 VALVE engine, 3.5L engine>
(2) Remove the connecting bolts (6 places) while turning the crankshaft.
(3) Gently lower the rear section of the transmission and transfer assembly to remove the assembly from the engine.

**Caution**
**When removing the transmission and transfer assembly, push the torque converter over to the transmission and transfer assembly side so it does not remain on the engine side.**

(4) Next, tilt the front section of the transmission and transfer assembly downwards and gently lower it, being careful that the rear section of the transfer does not touch the No. 4 crossmember.

## INSTALLATION SERVICE POINTS

### ▶A◀ CONTROL HOUSING INSTALLATION

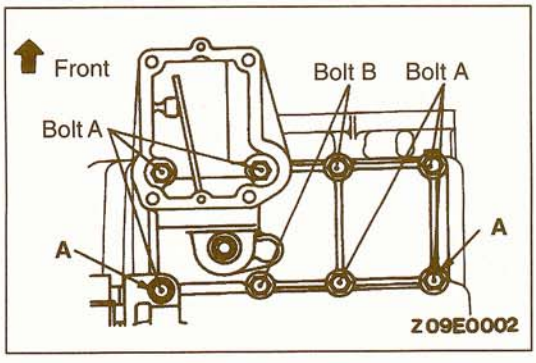


(1) Remove the adhesive which is sticking to the bolts attached to section A.
(2) Use a tap (M8×1.25) to remove the adhesive which is sticking to the screw holes (section A).
(3) Apply specified adhesive to the threads of the mounting bolts (section A).

**Specified adhesive:**
**3M Stud Locking No. 4170 or equivalent**

(4) The dimensions of the mounting bolts vary according to their mounting locations, so do not confuse them when installing.

| Bolt to be used | O.D.×Length mm (in.) | Bolt identification |
|---|---|---|
| A | "7" 8×25 (.3×1.0) | "7" D X L  Z09Y512 |
| B | "7" 8×257(.3×1.0) <Reamer bolt> | |



TSB Revision

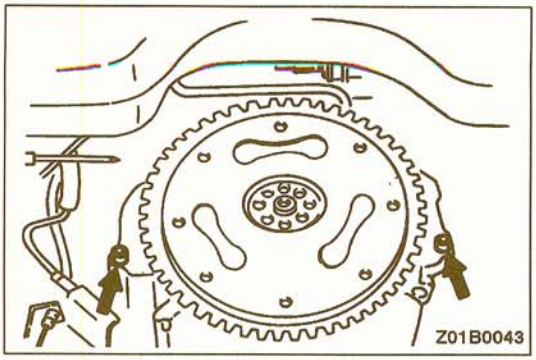


### ▶B◀ TRANSMISSION AND TRANSFER ASSEMBLY INSTALLATION

Align the engine transmission mounting bolt holes with the transmission and transfer assembly as shown in the illustration, and then connect the transmission and transfer assembly to the engine.

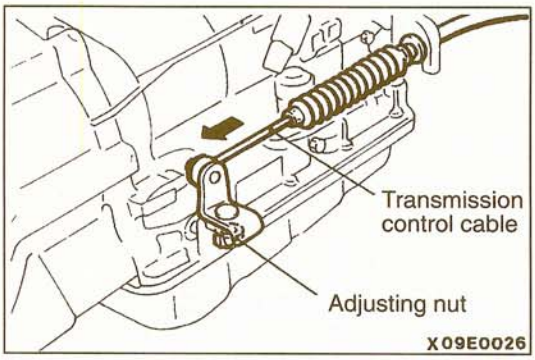


### ▶C◀ TRANSMISSION CONTROL CABLE INSTALLATION

After installing the transmission control cable, adjust it by the following procedure.

(1) Move the selector lever to the N position.
(2) Loosen the adjusting nut, gently pull the end of the transmission control cable in the direction of the arrow and then tighten the adjusting nut to the specified torque.

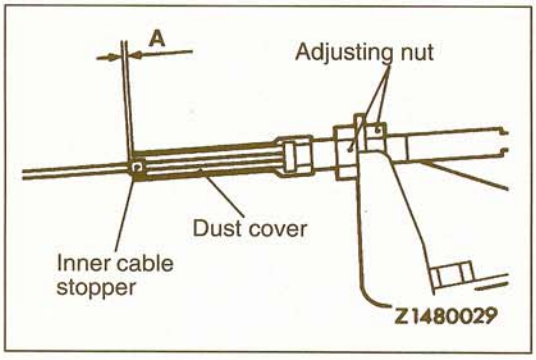


### ▶D◀ THROTTLE CABLE INSTALLATION

After installing the throttle cable, adjust it by the following procedure.

Open the throttle lever completely and adjust the cable with the adjusting nut so that the distance between the inner cable stopper and the dust cover end is at the standard value.

**Standard value (A): 0–1 mm (0–.04 in.)**

# AUTOMATIC TRANSMISSION OVERHAUL <V4AW2>

## CONTENTS

23309000091


BRAKE NO. 3 PISTON ..... 47
CENTER DIFFERENTIAL CASE ..... 81
CENTER SUPPORT ..... 41
DIRECT CLUTCH ..... 39
FORWARD CLUTCH ..... 37
FRONT OUTPUT SHAFT ..... 86
FRONT PLANETARY GEAR ..... 45
GENERAL INFORMATION ..... 2
GOVERNOR ..... 48
INPUT GEAR ..... 87
LOWER VALVE BODY ..... 54
OIL PUMP ..... 30
OVERDRIVE BRAKE ..... 35
OVERDRIVE CLUTCH ..... 32
OVERDRIVE PLANETARY GEAR ..... 34
REAR OUTPUT SHAFT ..... 80
REAR PLANETARY GEAR AND OUTPUT SHAFT ..... 46
SPECIAL TOOLS ..... 12
SPECIFICATIONS ..... 5
- Accumulator Piston and Spring Identification .. 8
- Adjustment Snap Rings and Spacers ..... 10
- Gear Ratio Table ..... 5
- Torque Specifications ..... 9
- Transmission Model Table ..... 5
- Sealants ..... 11
- Service Specifications ..... 6
- Valve Body Spring Identification ..... 7

SPEEDOMETER GEAR ..... 88
TRANSFER ..... 71
TRANSFER DRIVE SHAFT ..... 84
TRANSMISSION ..... 15
2-4WD SYNCHRONIZER ..... 82
UPPER FRONT VALVE BODY ..... 63
UPPER REAR VALVE BODY ..... 66
VALVE BODY ..... 50

# GENERAL INFORMATION

23300010079

**Precautions to be taken when disassembling and reassembling the transmission**

- Because the automatic transmission is composed of component parts of an especially high degre of precision, these parts should be very carefully handled during disassembly and assembly so as not to scar or scratch them.
- A rubber mat should be placed on the workbench, and it should always be kept clean.
- During disassembly, cloth gloves or shop towels should not be used. If such items must be used, either use articles made of nylon, or use paper towels.
- All disassembled parts must be thoroughly cleaned.
  Metal parts may be cleaned with ordinary detergents, but must be thoroughly air dried.
- Clean the clutch disc, resin thrust plate and rubber parts by using ATF (automatic transmission fluid), being very careful that dust, dirt, etc. do not adhere to them.
- Do not reuse gaskets, oil seals, or rubber parts.
  Replace such parts with new ones at every reassembly. The O-ring of the oil level gauge need not be replaced.
- Do not use grease other than petrolatum jelly.
- Apply ATF to friction components, rotating parts, and sliding parts before installation.
- Do not apply sealer or adhesive to gaskets.
- When a bushing must be replaced, replace the assembly in which it is incorporated.
- If the transmission main unit is damaged, also disassemble and clean the cooler system.

## SECTIONAL VIEW

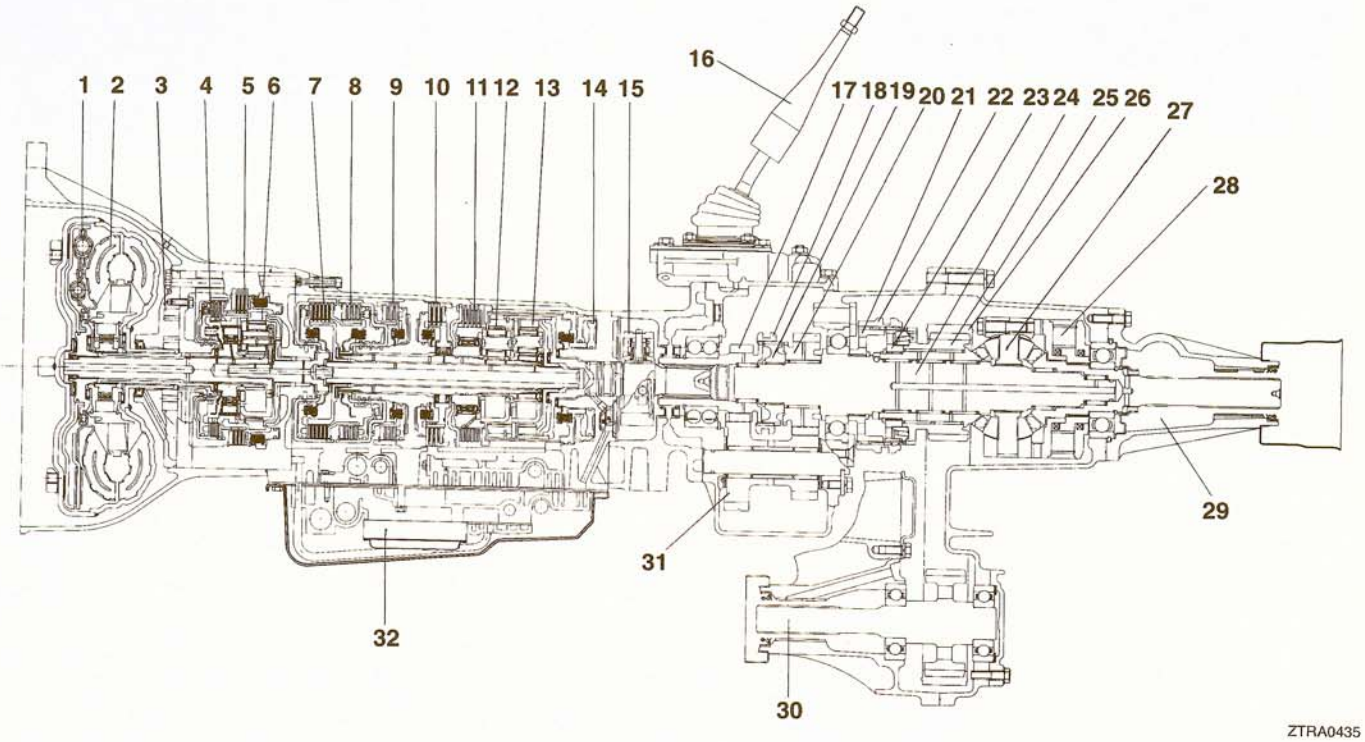


1. Lockup clutch
2. Torque converter
3. Oil pump
4. Overdrive clutch
5. Overdrive brake
6. Overdrive planetary gear
7. Forward clutch
8. Direct clutch
9. Brake No. 1
10. Brake No. 2
11. Brake No. 3
12. Front planetary gear
13. Rear planetary gear
14. Brake No. 3 piston
15. Governor
16. Transfer control lever
17. Input gear
18. High-low sleeve
19. High-low hub
20. Low speed gear
21. Differential lock hub
22. 2WD-4WD synchronizer sleeve
23. 2WD-4WD hub
24. Transfer drive shaft
25. Drive sprocket
26. Chain
27. Center differential
28. Viscous coupling
29. Rear output shaft
30. Front output shaft
31. Counter gear
32. Valve body

**TSB Revision**

## HYDRAULIC CONTROL SYSTEM

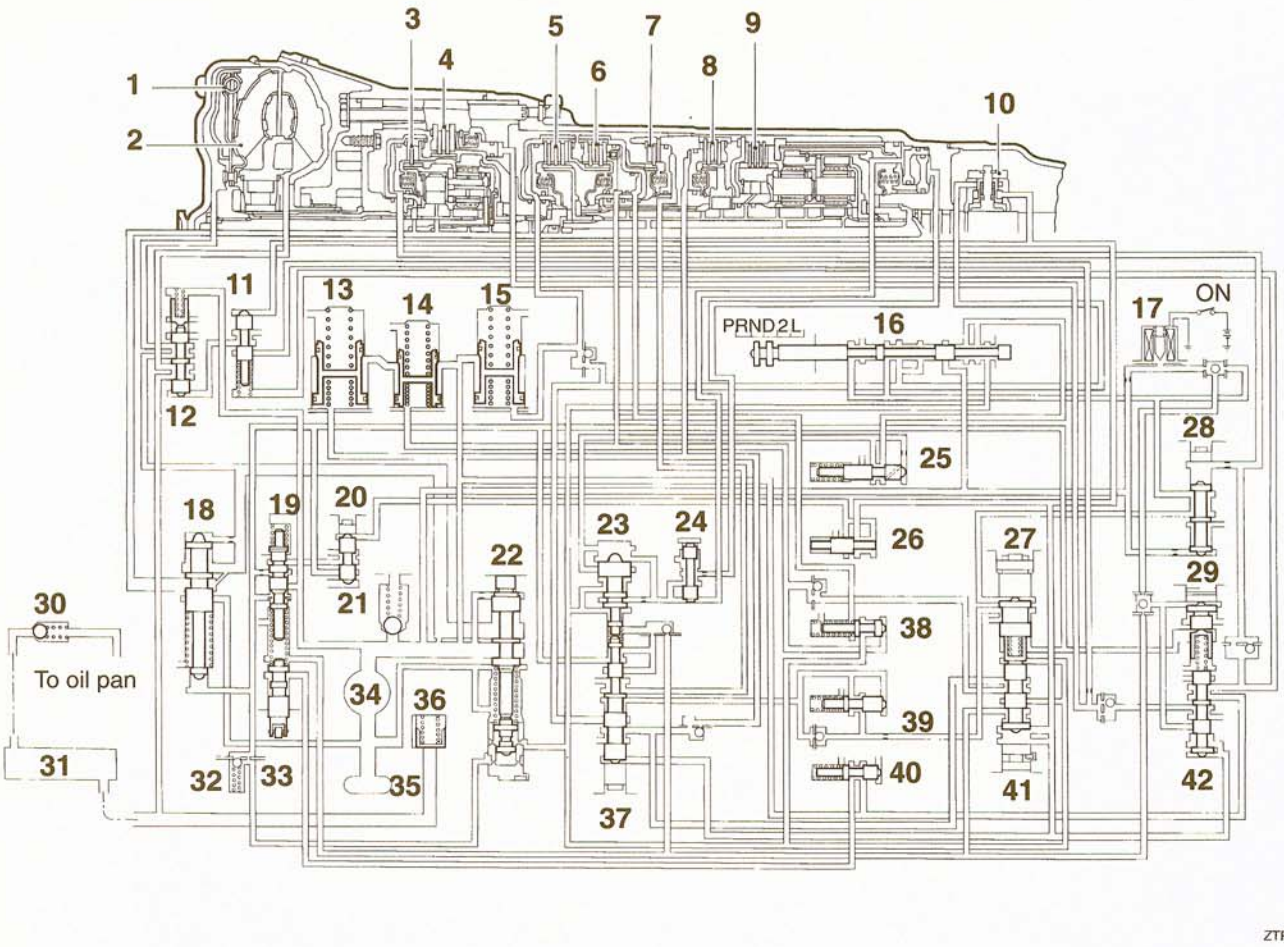


ZTRA0436

1. Lockup clutch
2. Torque converter
3. Overdrive clutch
4. Overdrive brake
5. Forward clutch
6. Direct clutch
7. Brake No. 1
8. Brake No. 2
9. Brake No. 3
10. Governor
11. Lockup signal valve
12. Lockup relay valve
13. Accumulator $B_2$
14. Accumulator $C_2$
15. Accumulator $C_1$
16. Manual valve
17. OD solenoid valve
18. Secondary regulator valve
19. Throttle valve
20. Cut back valve
21. Pressure relief valve
22. Primary regulator valve
23. Low coast shift valve
24. Plug
25. Low coast modulator valve
26. Plug
27. Intermediate shift valve
28. D-2 down timing valve
29. Third coast shift valve
30. Oil cooler return ball
31. Oil cooler
32. Damping check ball
33. Down shift plug
34. Oil pump
35. Strainer
36. Oil cooler by-pass valve
37. 1-2 shift valve
38. Reverse clutch sequence valve
39. Intermediate modulator valve
40. Detent regulator valve
41. 2-3 shift valve
42. 3-4 shift valve

**TSB Revision**

# SPECIFICATIONS

23300020089

## TRANSMISSION MODEL TABLE

| Transmission model | Gear ratio | Lockup clutch | Speedometer gear ratio | Vehicle model | Engine model |
|---|---|---|---|---|---|
| V4AW2-7-LEL | A | × | 25/8 | V43W | 6G72 |

## GEAR RATIO TABLE

23302280010

| | Gear ratio | A |
|---|---|---|
| Transmission | 1st | 2.826 |
| | 2nd | 1.493 |
| | 3rd | 1.000 |
| | 4th | 0.730 |
| | Reverse | 2.703 |
| Transfer | High | 1.000 |
| | Low | 1.925 |

## SERVICE SPECIFICATIONS

23300030099

### Transmission

mm (in.)

| Items | Standard value | Limit |
|---|---|---|
| Input shaft end play | 0.3 – 0.9<br>(.012 – .035) | – |
| Oil pump side clearance | 0.02 – 0.05<br>(.0008 – .0020) | 0.1<br>(.004) |
| Overdrive clutch piston stroke ($C_0$) | 1.92 – 2.64<br>(.0756 – .1039) | – |
| Forward clutch piston stroke ($C_1$) | 1.43 – 2.93<br>(.0562 – .1153) | – |
| Direct clutch piston stroke ($C_2$) | 0.91 – 1.99<br>(.0358 – .0783) | – |
| Overdrive brake clearance ($B_0$) | 0.65 – 2.21<br>(.0256 – .0870) | – |
| No. 1 brake piston stroke ($B_1$) | 0.80 – 1.73<br>(.0315 – .0681) | – |
| No. 2 brake piston stroke ($B_2$) | 1.01 – 2.25<br>(.0398 – .0886) | – |
| No. 3 brake clearance ($B_3$) | 0.61 – 2.64<br>(.0240 – .1039) | – |
| Stator support bushing bore (Front) | 21.501 – 21.527<br>(.8465 – .8475) | 21.577<br>(.8495) |
| Stator support bushing bore (Rear) | 23.025 – 23.051<br>(.9065 – .9075) | 23.101<br>(.9095) |
| Oil pump body bushing bore | 38.113 – 38.138<br>(1.5005 – 1.5015) | 38.188<br>(1.5035) |
| Overdrive sun gear bushing bore (Front and Rear) | 23.062 – 23.088<br>(.9080 – .9090) | 23.138<br>(.9109) |
| Overdrive input shaft bushing bore | 11.200 – 11.221<br>(.4409 – .4418) | 11.271<br>(.4437) |
| Sun gear bushing bore (Front and Rear) | 21.501 – 21.527<br>(.8465 – .8475) | 21.577<br>(.8495) |
| Center support bushing bore | 36.386 – 36.411<br>(1.4325 – 1.4335) | 36.461<br>(1.4355) |
| Transmission case bushing bore | 38.113 – 38.138<br>(1.5005 – 1.5015) | 38.188<br>(1.5035) |
| Output shaft bushing bore | 18.001 – 18.026<br>(.7087 – .7097) | 18.076<br>(.7117) |
| Extension housing bushing bore | 39.636 – 39.661<br>(1.5605 – 1.5615) | 39.711<br>(1.5634) |

**TSB Revision**

**Transfer**

mm (in.)

| Items | Standard value | Limit |
|---|---|---|
| H-L clutch hub end play | 0 – 0.08<br>(0 – .0031) | – |
| Input gear bearing end play | 0 – 0.06<br>(0 – .0024) | – |
| Input gear end play | 0 – 0.06<br>(0 – .0024) | – |
| Rear output shaft end play | 0 – 0.1<br>(0 – .004) | – |
| Differential lock hub end play | 0 – 0.08<br>(0 – .0031) | – |
| 2-4WD synchronizer hub end play | 0 – 0.08<br>(0 – .0031) | – |
| Rear output shaft bearing end play | 0 – 0.08<br>(0 – .0031) | – |
| Clearance between outer synchronizer ring back surface and drive sprocket | – | 0.3<br>(.012) |

## VALVE BODY SPRING IDENTIFICATION

mm (in.)

| Spring | | Free height | Outside diameter | Number of loops | Wire diameter | Identification color |
|---|---|---|---|---|---|---|
| **Upper front valve body** | Throttle valve spring | 21.94<br>(.864) | 8.58<br>(.338) | 8 | 0.71<br>(.028) | None |
| | Kickdown valve spring | 39.76<br>(1.565) | 10.83<br>(.426) | 11.5 | 1.2<br>(.047) | Purple |
| | Secondary regulator valve spring | 71.27<br>(2.806) | 17.43<br>(.686) | 15 | 1.93<br>(.076) | Green |
| **Upper rear valve body** | Intermediate modulator valve spring | 35.43<br>(1.395) | 8.80<br>(.346) | 14.4 | 0.9<br>(.035) | Red |
| | Reverse clutch sequence valve spring | 37.55<br>(1.478) | 9.2<br>(.362) | 14 | 1.2<br>(.047) | Red |
| | Low coast modulator valve spring | 42.35<br>(1.667) | 9.24<br>(.364) | 15 | 0.84<br>(.033) | None |
| | 2-3 shift valve spring | 35.10<br>(1.382) | 8.96<br>(.353) | 12.5 | 0.76<br>(.030) | White |
| | Detent regulator valve spring | 31.39<br>(1.236) | 8.85<br>(.348) | 13.5 | 0.9<br>(.035) | Orange |

mm (in.)

| Spring | | Free height | Outside diameter | Number of loops | Wire diameter | Identification color |
|---|---|---|---|---|---|---|
| Lower valve body | 1-2 shift valve spring | 34.62 (1.363) | 7.56 (.298) | 13 | 0.56 (.022) | None |
| | 3-4 shift valve spring | 35.18 (1.385) | 10.6 (.417) | 14.5 | 1.10 (.043) | Green |
| | Pressure relief valve spring | 32.14 (1.265) | 13.14 (.517) | 9 | 2.03 (.080) | None |
| | Oil cooler bypass valve spring | 28.9 (1.138) | 13.8 (.543) | 6.5 | 1.60 (.063) | Orange |
| | Primary regulator valve spring | 59.59 (2.346) | 17.02 (.670) | 10.5 | 1.7 (.067) | Light blue |
| | Damping check valve spring | 20.00 (.787) | 4.97 (.196) | 16 | 0.40 (.016) | None |
| | Lock-up signal valve spring | 46.0 (1.811) | 9.7 (.382) | 14.5 | 1.00 (.039) | Yellow |
| | Lock-up relay valve spring | 18.5 (.728) | 5.2 (.205) | 13 | 0.55 (.022) | White |

## ACCUMULATOR PISTON AND SPRING IDENTIFICATION

### Accumulator piston OD × Length

mm (in.)

| | |
|---|---|
| $C_1$ | 31.8 × 49.5 (1.252 × 1.949) |
| $C_2$ | 31.8 × 45.0 (1.252 × 1.772) |
| $B_2$ | 34.8 × 48.5 (1.512 × 1.909) |

### Accumulator piston spring

mm (in.)

| Spring | | | Free height | Outside diameter | Number of loops | Wire diameter | Identification color |
|---|---|---|---|---|---|---|---|
| $C_1$ | Twin | No. 1 Upper | 29.4 (1.157) | 12.7 (.5) | 6.1 | 1.2 (.047) | Pink |
| | | No. 2 Lower | 57.2 (2.252) | 17.5 (.689) | 17.3 | 1.9 (.075) | Pink |
| $C_2$ | Twin | No. 1 Upper | 30.0 (1.181) | 15.5 (.610) | 6.15 | 1.8 (.071) | None |
| | | No. 2 Lower | 43.56 (1.715) | 14.3 (.563) | 9.45 | 1.8 (.071) | Blue |
| $B_2$ | Twin | No. 1 Upper | 35.13 (1.383) | 16.16 (.636) | 6 | 1.3 (.051) | Red |
| | | No. 2 Lower | 55.18 (2.172) | 22.39 (.881) | 11.75 | 2.9 (.114) | Orange |

**TSB Revision**

## TORQUE SPECIFICATIONS

23302310016

| Items | | Nm | ft.lbs. |
|---|---|---|---|
| Transmission | Converter housing installation bolts 10 mm (.39 in.) dia. bolt | 35 | 25 |
| | Converter housing installation bolts 12 mm (.47 in.) dia. bolt | 58 | 42 |
| | Oil pump assembly installation bolt | 22 | 16 |
| | Oil pump body and cover-tightening bolt | 7.5 | 5.4 |
| | Center support installation bolt | 26 | 19 |
| | Adapter installation bolt | 35 | 25 |
| | Cover plate installation screw | 7.5 | 5.4 |
| | All bolts of valve body | 5.5 | 4.0 |
| | Throttle cam installation bolt | 7.5 | 5.4 |
| | Valve body assembly installation bolt | 10 | 7.2 |
| | Oil screen installation bolt | 5.5 | 4.0 |
| | Parking cam plate installation bolt | 7.5 | 5.4 |
| | Oil pan installation bolt | 4.5 | 3.3 |
| | Plug (for hydraulic test) | 7.5 | 5.4 |
| | Oil pan drain plug | 21 | 15 |
| | Overdrive solenoid valve installation bolt | 13 | 9 |
| | Plug | 13 | 9 |
| | Manual lever installation nut | 16 | 12 |
| Transfer | Transfer case installation bolt | 36 | 26 |
| | Transfer case installation nut | 36 | 26 |
| | Chain cover bolt | 36 | 26 |
| | Side cover bolt | 9 | 6.5 |
| | Rear cover bolt | 36 | 26 |
| | Cover bolt | 19 | 14 |
| | Control housing bolt | 19 | 14 |
| | Oil filler plug | 33 | 24 |
| | Drain plug | 33 | 24 |
| | Select plug | 33 | 24 |
| | Locking plate bolt | 19 | 14 |
| | Rear output shaft lock nut | 115 | 83 |
| | Speedometer gear clamp bolt | 19 | 14 |
| | Detection switch | 36 | 26 |
| | Poppet plug | 36 | 26 |
| | H-L shift rail plug | 33 | 24 |
| | Oil dam cover | 9 | 6.5 |
| | Bearing retainer | 19 | 14 |
| | Dynamic damper | 70 | 51 |
| | Center differential case front | 65 | 47 |

**TSB Revision**

## ADJUSTMENT SNAP RINGS AND SPACERS

23302300013

| Part name | Thickness mm (in.) | Identification symbol | Part No. |
|---|---|---|---|
| **Transfer**<br>Snap ring<br>(For adjustment of input gear bearing) | 2.30 (.091) | – | MD704199 |
| | 2.35 (.093) | Red | MD704200 |
| | 2.40 (.094) | White | MD704201 |
| | 2.45 (.096) | Blue | MD704202 |
| | 2.50 (.098) | Green | MD704203 |
| Snap ring<br>(For adjustment of input gear assembly) | 2.70 (.106) | Purple | MD704204 |
| | 2.75 (.108) | Pink | MD704205 |
| | 2.80 (.110) | Yellow | MD704206 |
| | 2.85 (.112) | White | MD704207 |
| | 2.90 (.114) | Blue | MD704208 |
| Snap ring<br>(For adjustment of H-L clutch hub) | 2.14 (.084) | – | MD704212 |
| | 2.21 (.087) | Yellow | MD704213 |
| | 2.28 (.090) | White | MD704214 |
| | 2.35 (.093) | Blue | MD704215 |
| | 1.42 (.095) | Red | MD704216 |
| Spacer<br>(For adjustment of rear output shaft, center differential end play) | 0.84 (.033) | 84 | MD734326 |
| | 0.93 (.037) | 93 | MD734327 |
| | 1.02 (.040) | 02 | MD734328 |
| | 1.11 (.044) | 11 | MD734329 |
| | 1.20 (.047) | 20 | MD734330 |
| | 1.29 (.051) | 29 | MD734331 |
| | 1.38 (.054) | 38 | MD734332 |
| | 1.47 (.058) | 47 | MD734333 |
| | 1.56 (.061) | 56 | MD734334 |
| | 1.65 (.065) | 65 | MD734335 |
| | 1.74 (.069) | 74 | MD734336 |
| | 1.83 (.072) | 83 | MD734337 |
| | 1.92 (.076) | 92 | MD734338 |
| | 2.01 (.079) | 01 | MD734339 |

**TSB Revision**

| Part name | Thickness mm (in.) | Identification symbol | Part No. |
|---|---|---|---|
| Snap ring (For adjustment of rear output shaft bearing end play) | 2.26 (.089) | – | MD734311 |
| | 2.33 (.092) | Red | MD734312 |
| | 2.40 (.094) | White | MD734313 |
| | 2.47 (.097) | Blue | MD734314 |
| Snap ring (For adjustment of 2-4WD synchronizer hub end play) | 2.56 (.101) | – | MD738393 |
| | 2.63 (.104) | Red | MD738394 |
| | 2.70 (.106) | White | MD738395 |
| | 2.77 (.109) | Blue | MD738396 |
| | 2.84 (.112) | Yellow | MD738397 |
| Snap ring (For adjustment of differential lock hub end play) | 2.56 (.101) | – | MD738386 |
| | 2.63 (.104) | Red | MD738387 |
| | 2.70 (.106) | White | MD738888 |
| | 2.77 (.109) | Blue | MD738389 |
| | 2.84 (.112) | Yellow | MD738390 |
| | 2.91 (.115) | Green | MD738391 |
| | 2.98 (.117) | Purple | MD738392 |

## SEALANTS

23300050026

| Items | | Specified sealants and adhesives | Quantity |
|---|---|---|---|
| **Transmission** | Oil pump bolt (threads) | 3M ATD Part No. 8660 or equivalent | As required |
| **Transfer** | Adapter gasket (both sides) | Mitsubishi genuine sealant Part No. MD997740 or equivalent | As required |
| | Chain cover | Mitsubishi genuine sealant Part No. MD997740 or equivalent | As required |
| | Rear cover | Mitsubishi genuine sealant Part No. MD997740 or equivalent | As required |
| | Cover | Mitsubishi genuine sealant Part No. MD997740 or equivalent | As required |
| | Poppet plug | 3M ATD Part No. 8660 or equivalent | As required |
| | Plug | 3M ATD Part No. 8660 or equivalent | As required |
| | Bolt (threads) | 3M STUD Locking No. 4170 or equivalent | As required |

**TSB Revision**

## SPECIAL TOOLS

23300060081

| Tool | Tool number and name | Supersession | Application |
|---|---|---|---|
|  | MB990929<br>Installer adapter | MB990929 | Installation of the oil seal |
|  | MB990936<br>Installer adapter | MB990936 | Installation of the oil seal |
|  | MB990938<br>Installer bar | MB990938 | Installation of the oil seal |
|  | MD998192<br>Counter gear bearing puller | MD998192 | Installation of the bearing |
|  | MD998211<br>Retainer | MD998211 | Use with MD998903, MD998904 |
|  | MD998212<br>Oil pump puller | MD998212 | Removal of oil pump |
| 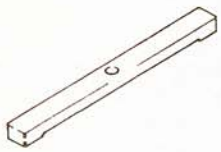 | MD998217<br>Gauge | MD998217 | Check of quality of assembly condition |
| 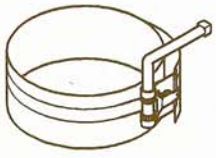 | MD998335<br>Oil pump band | MD998335-01 | Assembly of oil pump |

**TSB Revision**

| Tool | Tool number and name | Supersession | Application |
|---|---|---|---|
| 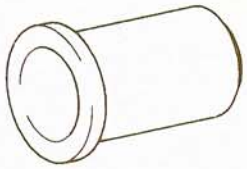 | MD998382<br>Counter shaft front oil seal installer | MD998382-01 | Installation of oil pump oil seal |
| 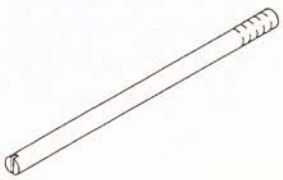 | MD998412<br>Guide | MD998412 | Installation of oil pump |
| 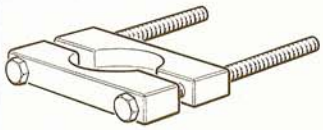 | MD998801<br>Bearing remover | MD998801 | Removal of bearing |
|  | MD998812<br>Installer cap | GENERAL SERVICE TOOL | Use with installer handle and adapter |
|  | MD998813<br>Installer-100 | GENERAL SERVICE TOOL | Use with installer cap and adapter |
|  | MD998814<br>Installer-200 | MIT304180 | Use with installer cap and adapter |
|  | MD998815<br>Installer adapter (26) | GENERAL SERVICE TOOL | Installation of the bearing |
|  | MD998823<br>Installer adapter (48) | GENERAL SERVICE TOOL | |

| Tool | Tool number and name | Supersession | Application |
|---|---|---|---|
|  | MD998824<br>Installer adapter (50) | GENERAL SERVICE TOOL | Installation of the bearing |
|  | MD998830<br>Installer adapter (66) | MD998830-01 | |
| 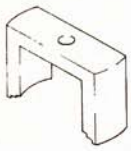 | MD998903<br>Spring compressor | MD998903-01 | Disassembly and assembly of No. 3 brake spring<br>Use with MD998211 and MD998904 |
| 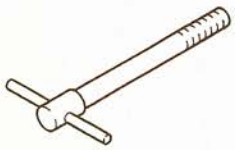 | MD998904<br>Bolt | MD998904 | Disassembly and assembly of No. 3 brake spring<br>Use with MD998211 and MD998903 |
| 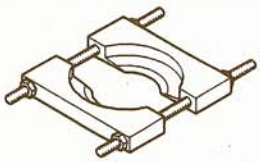 | MD998917<br>Bearing remover | MD998917-01 | Removal of bearing |
| ——— | ———<br>Base assembly | 34607 | ——— |
| ——— | ———<br>Holding fixture | MIT53425 | ——— |

# TRANSMISSION

23300820016

## DISASSEMBLY

**Caution**

1. **When removing the transmission assembly from the vehicle, use care so that the oil pan is not hit by the transmission jack.**
2. **The automatic transmission is built of accurately machined parts which should be handled during disassembly with utmost care to prevent damage.**
3. **When separating light alloy metal parts such as the case, do not pry with a screwdriver but tap lightly with a soft headed hammer (plastic hammer).**
4. **Place rubber mat on the work bench and keep it clean.**
5. **During disassembly, do not wear cloth gloves or use rags. If necessary, use nylon cloth or paper towel.**
6. **Clean all parts that have been disassembled. Ordinary detergent may be used for cleaning metallic parts but after washing, be sure to dry with air.**
7. **Wash the clutch disc, brake disc, resin and rubber parts in ATF (automatic transmission fluid) and keep them free from dust.**
8. **If the transmission itself is damaged, disassemble and clean the cooler system.**

(1) Remove sand and dirt from the outside of the transmission.
(2) Remove the transfer.
(3) Place the transmission assembly on a bench with the oil pan down.

**Caution**
**Do not place the assembly with the oil pan up before the oil pan is removed. This is necessary to prevent foreign matter in the oil pan from entering the valve body.**

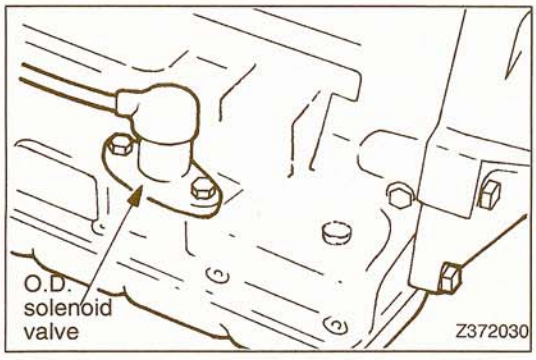


(4) Remove the torque converter.
(5) Remove the O.D. solenoid valve.

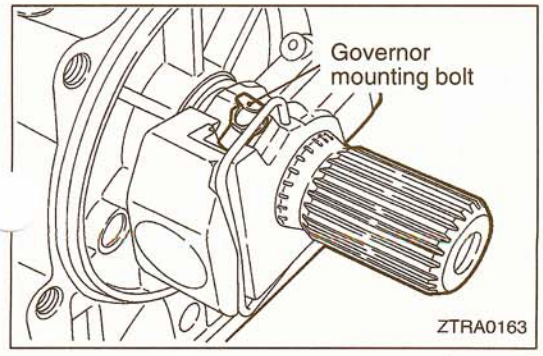


(6) Remove the adapter and gasket, and remove the oil seal from the adapter.
(7) Remove the governor mounting bolt.

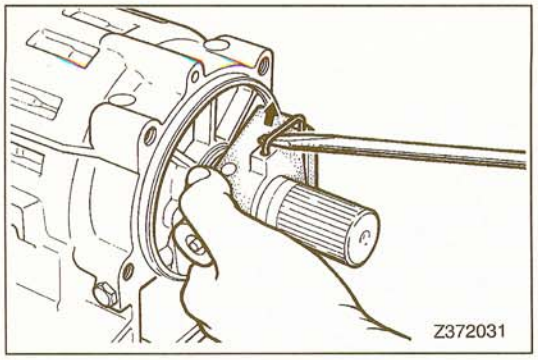


(8) Lift up the governor retaining ring lightly by a screwdriver and remove the governor assembly from the output shaft.

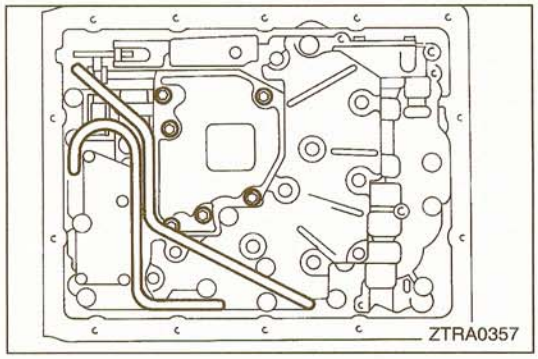


(9) With the oil pan down, remove the oil pan bolts and then remove the oil pan and gasket.
(10) Place the assembly with the valve body up.
(11) Remove the oil pipe, prying with a screwdriver and using care not to cause deformation.
(12) Remove the oil screen and spacer.

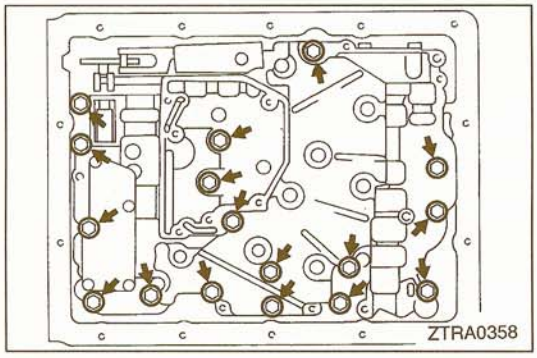


(13) Remove 17 bolts attaching the valve body assembly.

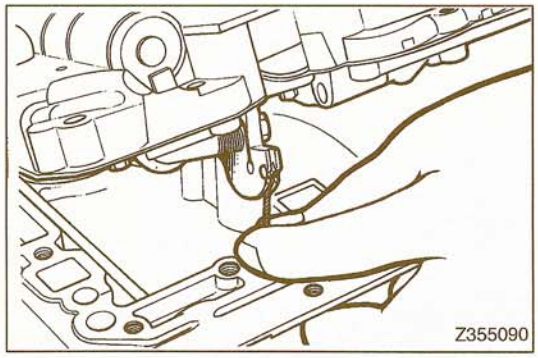


(14) Raise the valve body assembly slowly and remove the throttle inner cable from the throttle cam. Then, remove the valve body assembly.

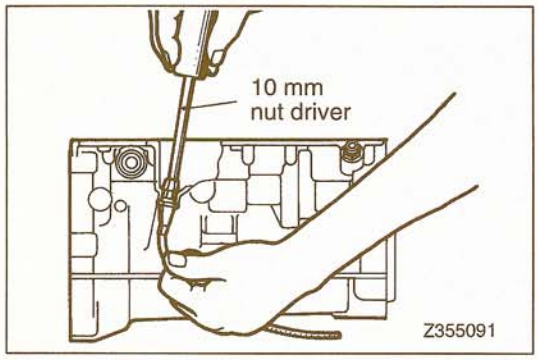


(15) Push the throttle cable adapter to disconnect the throttle cable from the case.

**TSB Revision**

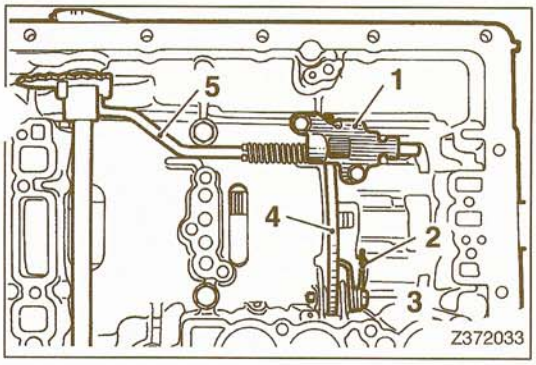


(16) Remove the plate 1 and parking pawl torsion spring 2. Then, pull out pivot pin 3 and remove parking pawl 4. Remove parking rod 5 from the manual valve detent lever.

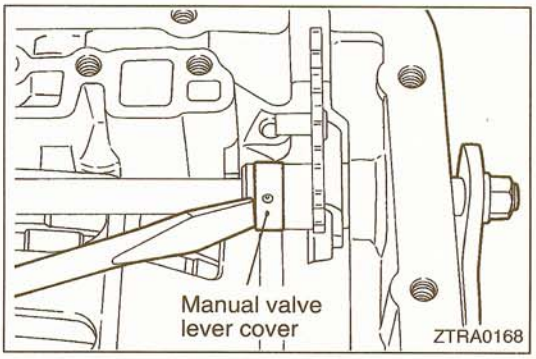


(17) Using a screwdriver, move the manual valve lever cover.

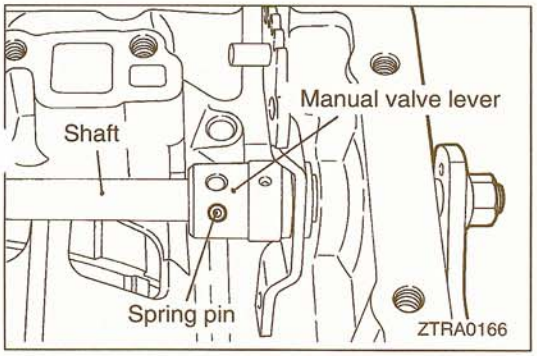


(18) Drive out spring pin, and then remove shaft and manual valve lever.
(19) Remove the oil seal from the manual valve shaft using a screwdriver.
When installing the oil seal, do so evenly.

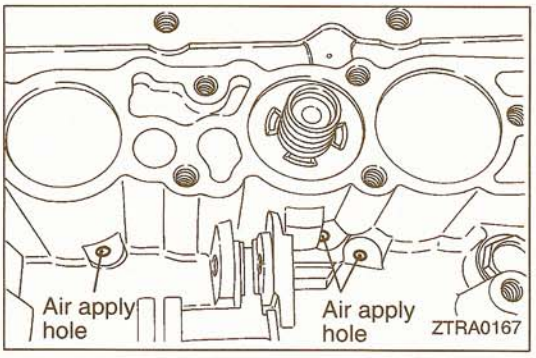


(20) Remove the accumulator piston by blowing air from the illustrated position.

**Caution**
**Use care as the piston and fluid pops and gushes out. Pistons for $B_2$, $C_2$, and $C_1$ have been installed from the front to rear in the order shown. Store the removed pistons and springs arranged in this order.**

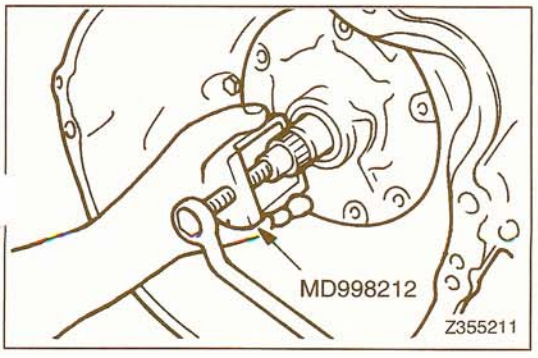


(21) Remove the oil pump attaching bolts.
(22) Remove the oil pump by using the special tool.
(23) Remove the converter housing attaching bolts.
(24) Holding the O.D. input shaft by hand, remove the converter housing.

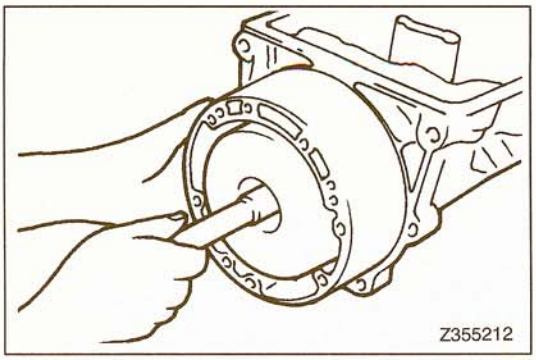


(25) Remove the O.D. input shaft, planetary gear and O.D. clutch assembly from the O.D. case.
(26) Separate the O.D. clutch from the O.D. planetary gear.

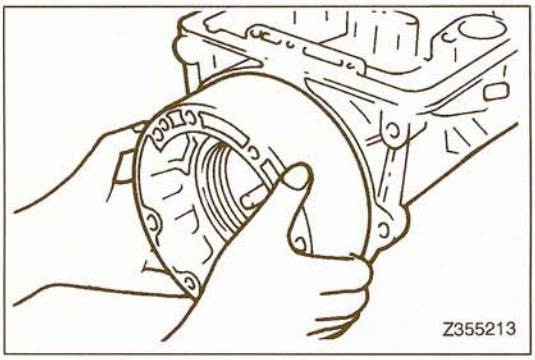


(27) Remove the O.D. case assembly.

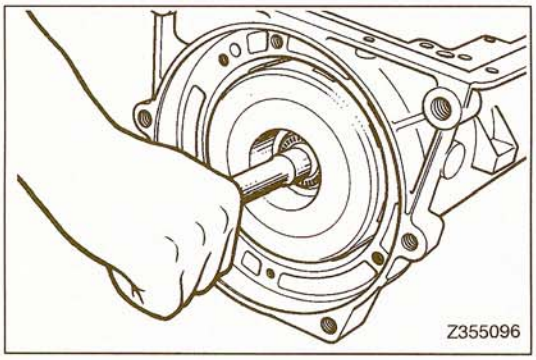


(28) Remove the forward clutch assembly.

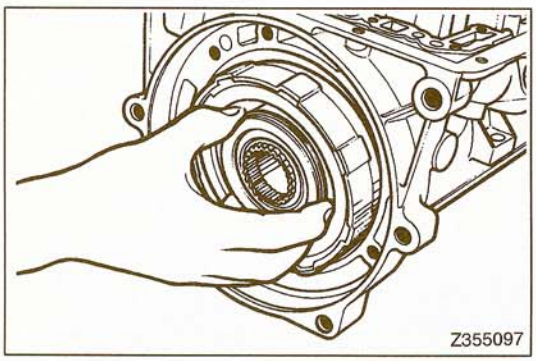


(29) Remove the direct clutch assembly.

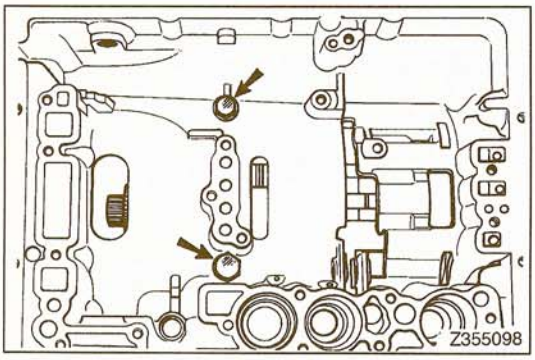


(30) Remove the two center support attaching bolts.

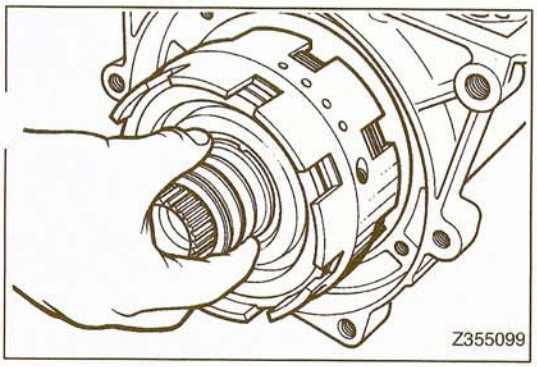


(31) Remove the center support and sun gear assembly together from the case.

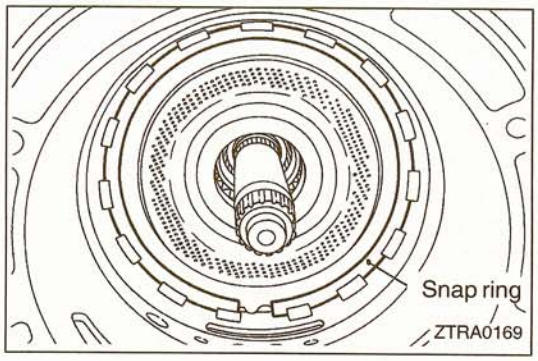


(32) Remove the snap ring from the front planetary carrier by using a screwdriver.

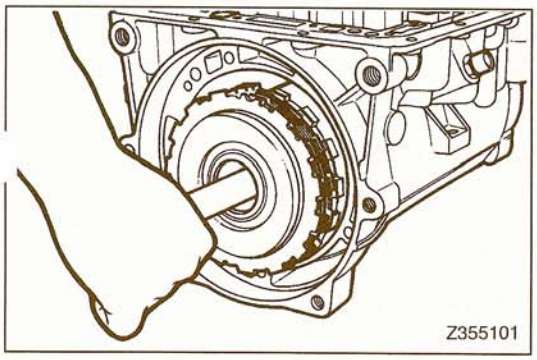


(33) Holding the intermediate shaft, remove the carrier assembly from the case.
(34) Remove the No. 3 brake tube.

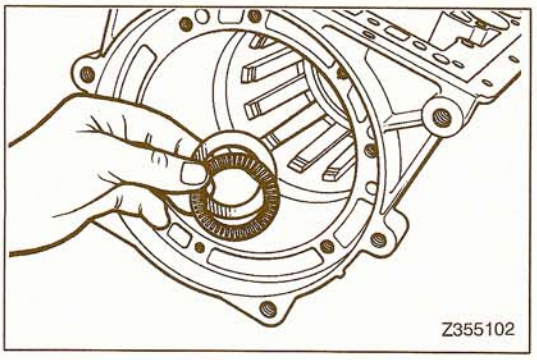


(35) Remove the output shaft thrust bearing and race from the case.

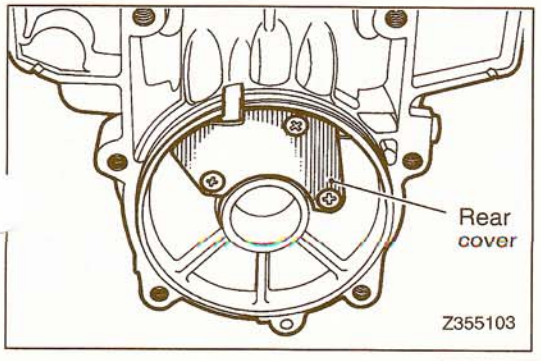


(36) Remove the rear cover and rear cover gasket.

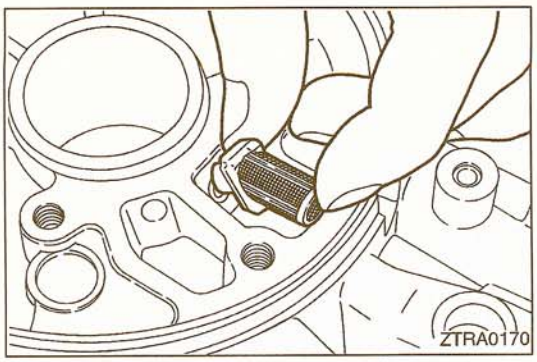


(37) Remove the filter.

## REASSEMBLY

**Caution**

1. **The automatic transmission is built of accurately machined parts which should be handled during reassembly with utmost care to prevent damage. Damaged parts could cause fluid leaks or affect performance. Check the parts carefully before reassembly.**
2. **Clean all parts that are to be reassembled. Ordinary detergent may be used for cleaning metallic parts but after washing, be sure to dry well with air.**
3. **Wash the clutch disc, resin thrust plate and rubber parts in ATF and keep them free from dust.**
4. **Do not reuse gasket, oil seal and other rubber parts. At reassembly, replace them with new ones.**
5. **Never use grease other than petrolatum or industrial petrolatum.**
6. **Apply ATF to friction elements, rotating parts and sliding parts before installation.**
7. **New clutch disc and brake disc should be immersed in ATF for more than two hours before installation.**
8. **Do not apply sealer or adhesive to gaskets.**
9. **When bushing must be replaced, replace assembly which includes it.**
10. **Tighten parts to specified torque.**

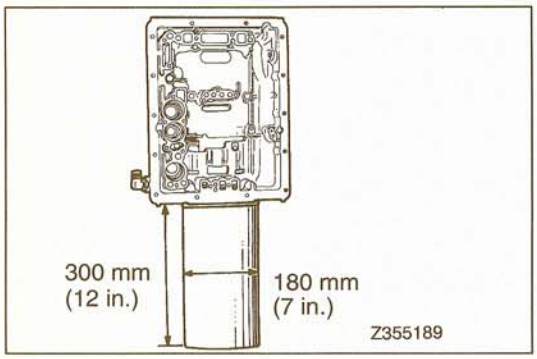


(1) Place the transmission case on a cylinder as illustrated. Use of a cylinder measuring 300 mm (12 in.) long and 180 mm (7 in.) in diameter is recommended. Place shock absorbing material between the case and the cylinder to prevent damage to the case.

**TSB Revision**

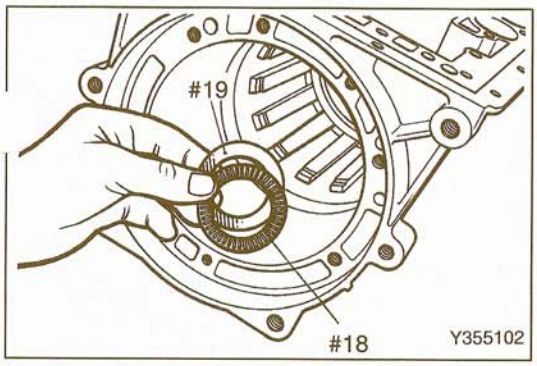


(2) Install output shaft thrust bearing race #19 and thrust bearing #18 in the case.

**Caution**
**When installing the thrust bearing and race, note their direction, referring to the illustration.**

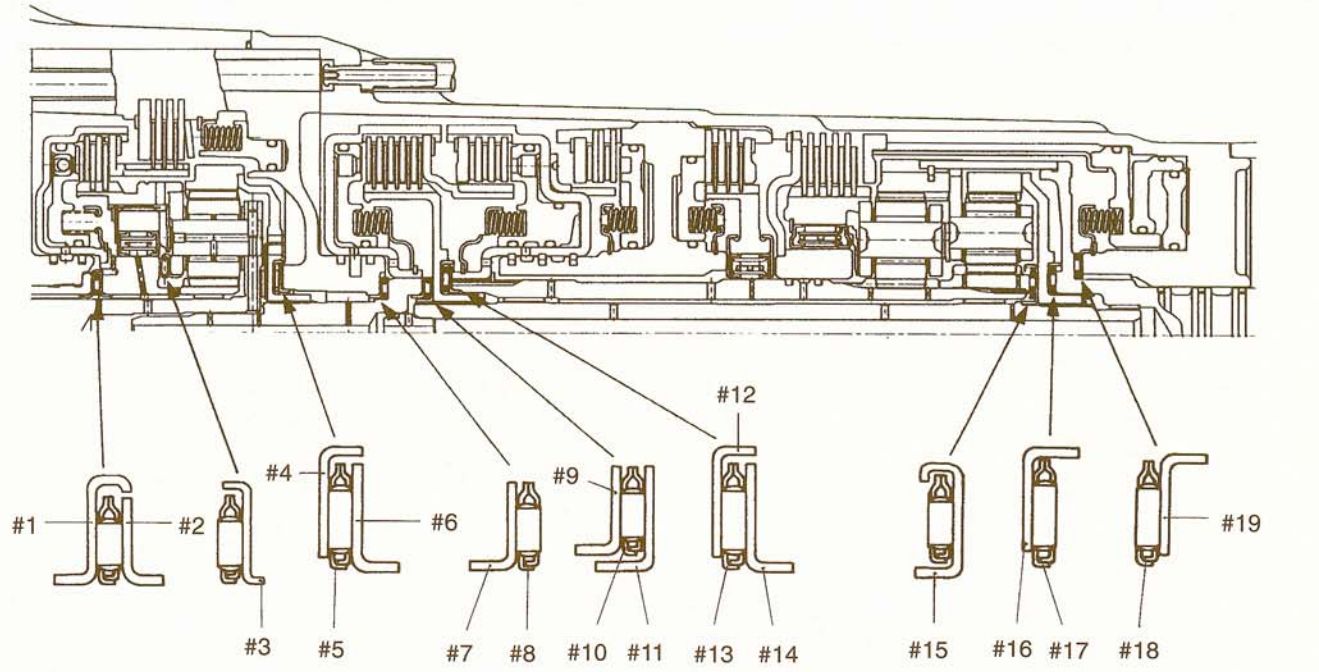


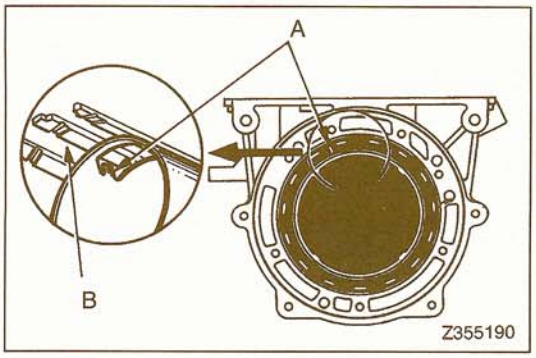


(3) Install the apply tube in the case. Make sure that the pawl at the end of the tube is inserted to inside of the piston.

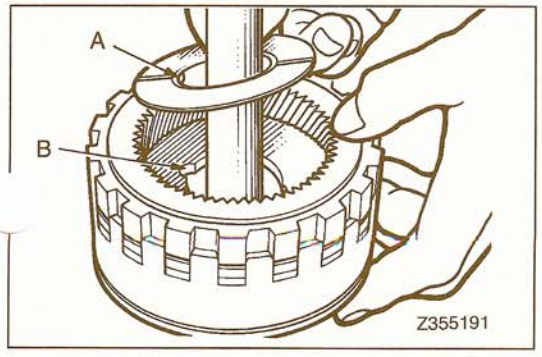


(4) Install the thrust washer on the planetary carrier, seating its pawl (A) securely in the (B) of the carrier.

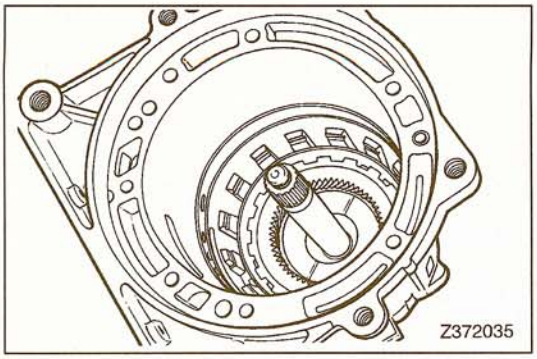


(5) Install the rear planetary gear and output shaft assembly in the case. Insert slowly and taking care not to hit at the bearing.

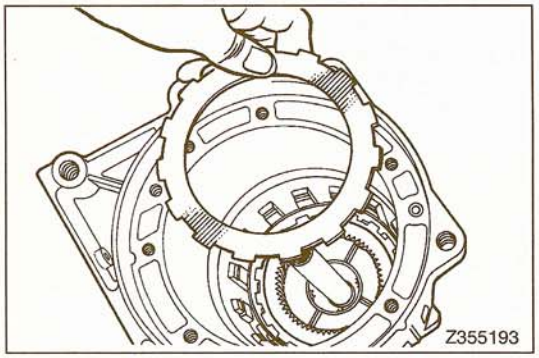


(6) Install the backing plate in the case. Insert firmly until it comes into contact with the apply tube.

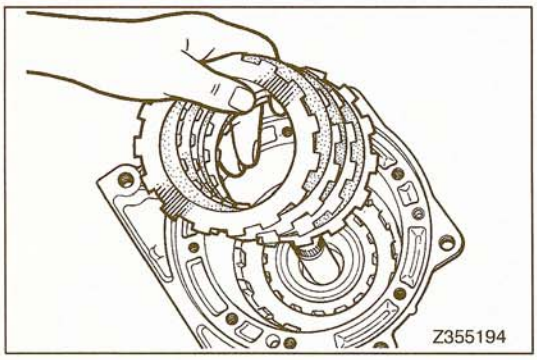


(7) Apply grease to the thrust washer and attach it to the front planetary gear carrier. Then install the front planetary gear assembly in the ring gear.
(8) Install the clutch discs and plates alternately in this order on the backing plate.

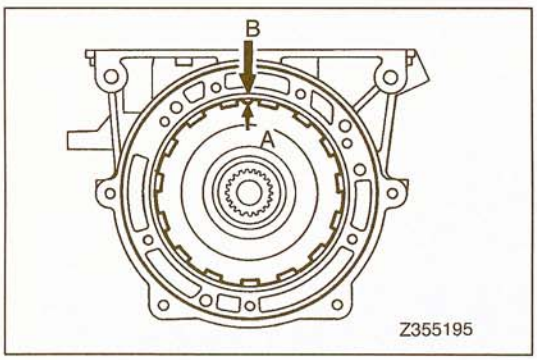


(9) Place the transmission case on a bench with the oil pan mounting surface up.
(10) Insert the sun gear in the one-way clutch inner race and install the assembly in the case, aligning (A) of the one-way clutch inner race with (B) of the case. If the inner race is hard to engage, turn the sun gear while holding the front planetary ring gear. Then, holding the one-way clutch inner race, remove the sun gear. Fit the removed sun gear to the center support.

**Caution**
**Check the snap ring end gap position to make sure that the carrier is seated completely.**

(11) Install the snap ring.

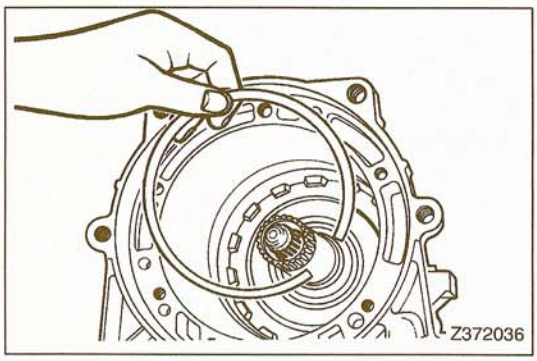

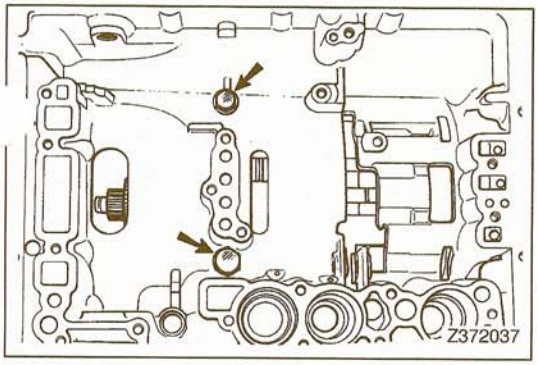


(12) Install the center support assembly in the case, checking correct seating of the one-way clutch on the center support and pushing the center support while pulling the sun gear. The center support will not be installed completely in the case if the one-way clutch is floating.

(13) Pushing the center support backward, tighten the bolts alternately on side (A) in about 7 Nm (5 ft.lbs.) increments. Finally tighten to specified torque.

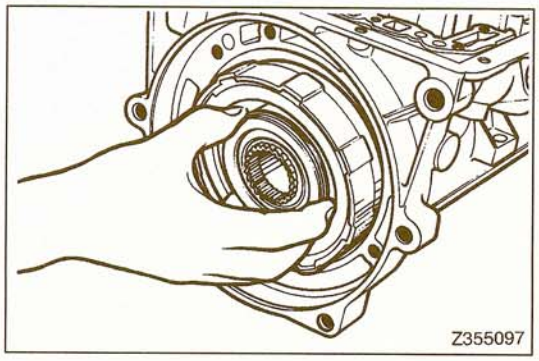


(14) Install the direct clutch assembly.

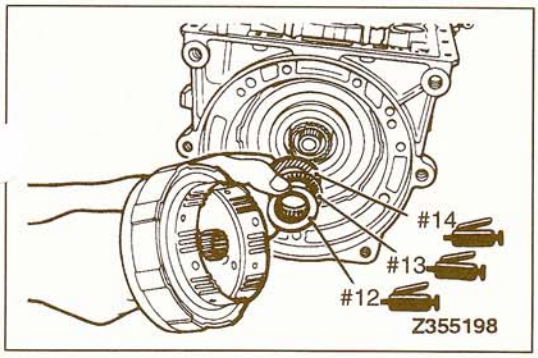


(15) Attach thrust race #12, bearing #13 and thrust race #14 onto the rear of the forward clutch hub using petrolatum and noting the direction of the thrust bearing race.

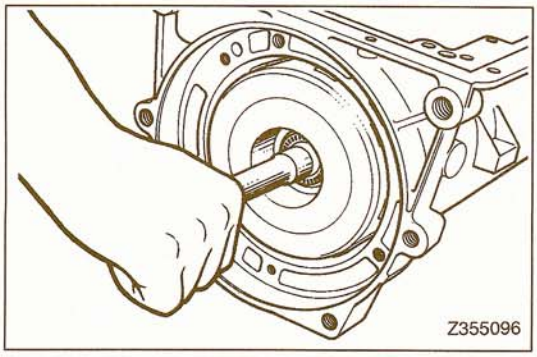


(16) Install the forward clutch assembly, using care not to drop the thrust bearing attached in the step above.

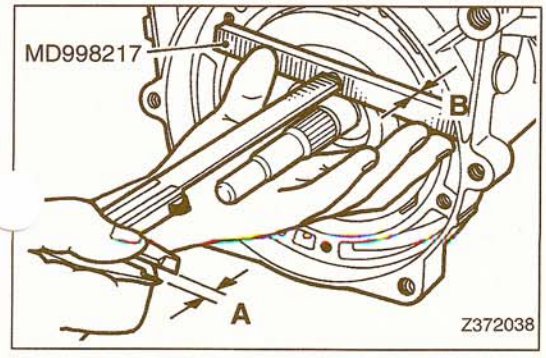


(17) Check that the forward clutch has been installed completely by using the special tool.
Measured value (A) – gauge thickness (B) = forward clutch installation height

**Standard value: Approx. 1.5 mm (.059 in.)**

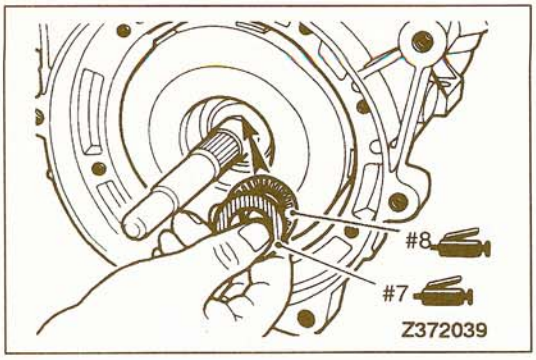


(18) Attach thrust bearing #8 and race #7 to the forward clutch using petrolatum and noting the direction of the thrust bearing race.

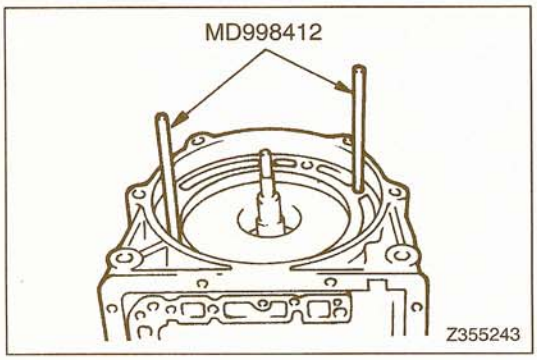


(19) Install special tool in the transmission case.

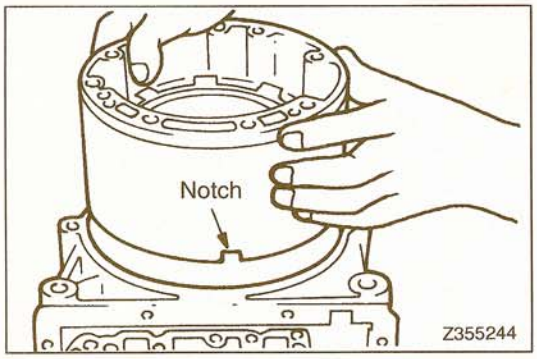


(20) Along the guides, install the O.D. case assembly in the transmission case, positioning the O.D. case notch as illustrated.

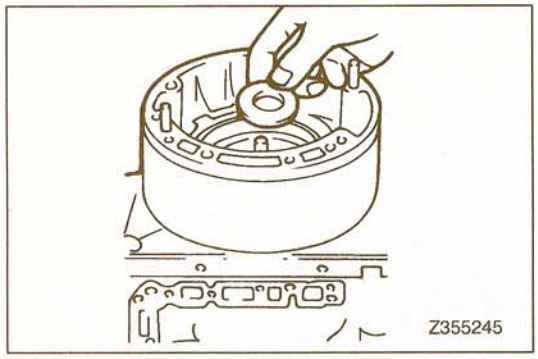


(21) Install the thrust washer on the O.D. planetary gear.

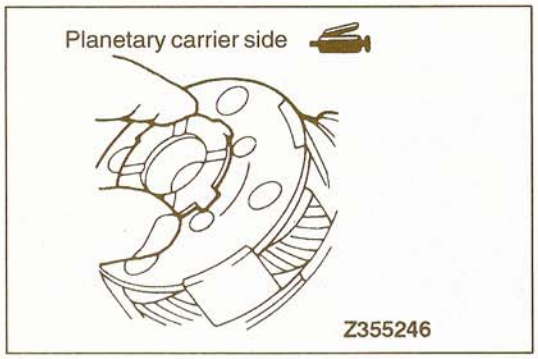


(22) Apply petrolatum to the rear of the O.D. planetary carrier and attach the thrust washer thereon.

**TSB Revision**

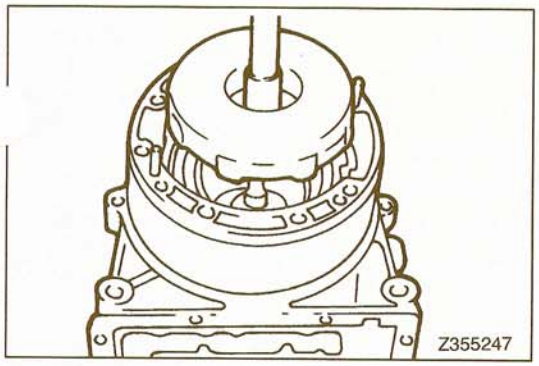


(23) Install the O.D. clutch and planetary gear assembly with the thrust washer in the case slowly.

NOTE
Align the O.D. case clutch disc lugs.

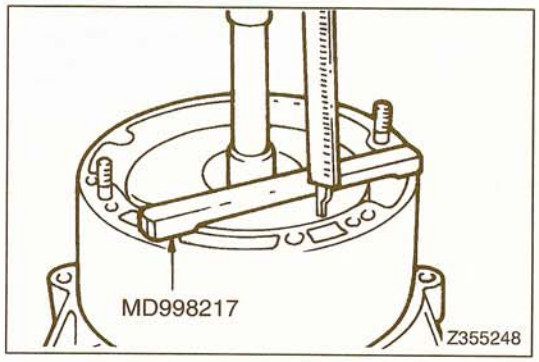


(24) Check that the O.D. clutch and planetary gear set assembly has been installed completely by using the special tool.
Measured value – gauge thickness = O.D. clutch assembly installed height

**Standard value: Approx. 2 mm (.08 in.)**

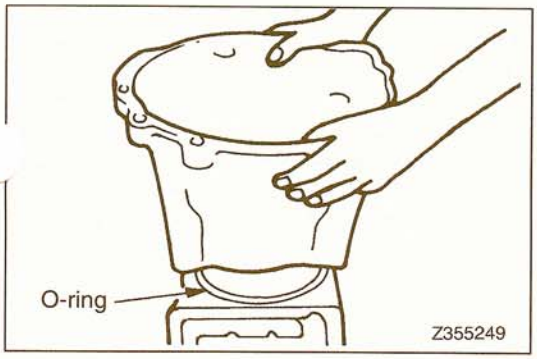


(25) Install the O-ring at illustrated position and then install the converter housing.

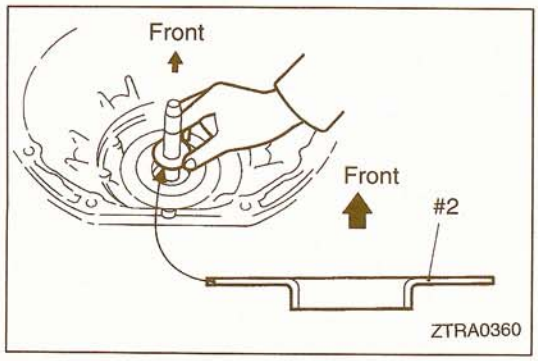


(26) Install race #2 over the O.D. input shaft.

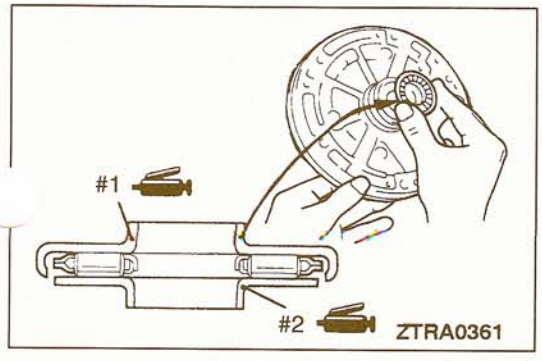


(27) Apply petrolatum to the oil pump and install thrust race and bearing #1.

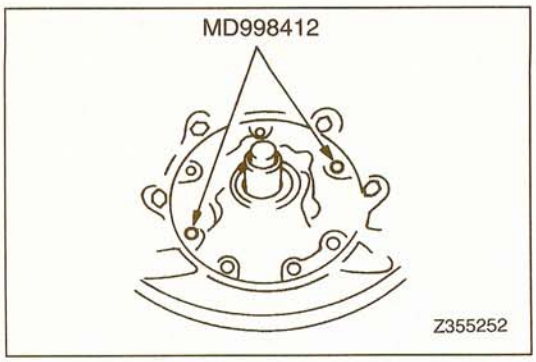


(28) Install the oil pump slowly by using the special tools.
(29) Apply sealer to the set bolts and tighten them uniformly and little by little. Check input shaft end play and check that the shaft turns lightly.

**Specified sealant: 3M ATD Part No. 8660 or equivalent**

(30) Tighten the oil pump assembly attaching bolts to specified torque and check the input shaft end play.

**Standard value: 0.3–0.9 mm (.012–.035 in.)**

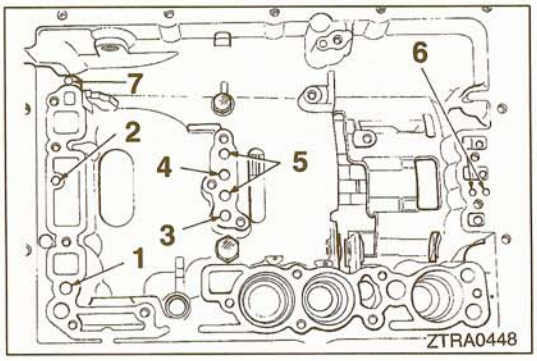


(31) Supply low pressure air to each circuit and check operation by operating noise.

1. O.D. clutch
2. Forward clutch
3. Brake No. 1
4. Brake No. 2
5. Direct clutch
6. Brake No. 3
7. O.D. brake

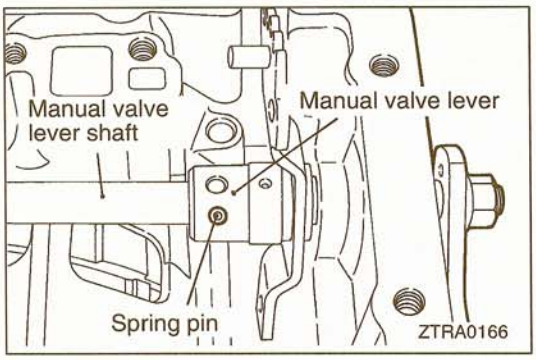


(32) Install the parking rod assembly on manual valve lever and insert manual valve lever shaft in the case. Then, drive in slotted spring pin.

**Caution**
1. **Be sure to use a new slotted spring pin.**
2. **Install the slotted spring pin in such a way that its end protrudes approx. 1 mm (.4 in.) from the lever.**

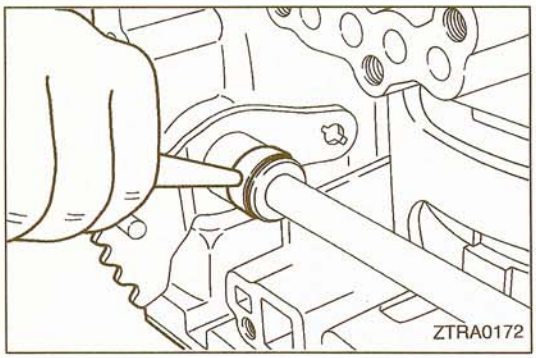


(33) Align the staking hole in the manual valve lever with the indentation in cover and stake the cover using a punch.

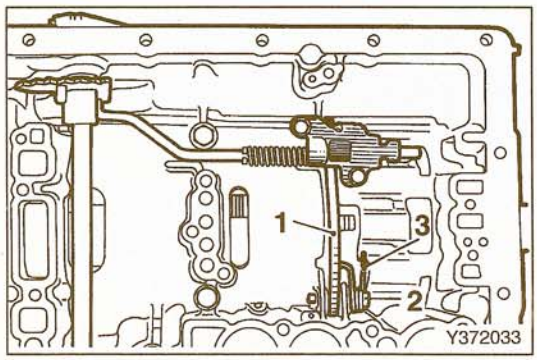


(34) Place parking pawl 1 in the case and install pivot pin 2 and spring 3.

**TSB Revision**

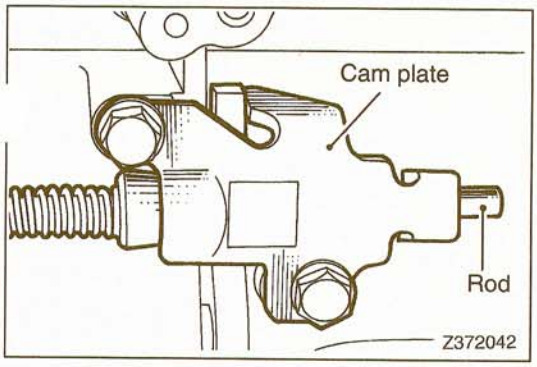


(35) Install the cam plate, making sure that the parking rod assembly protrudes from the cam plate.

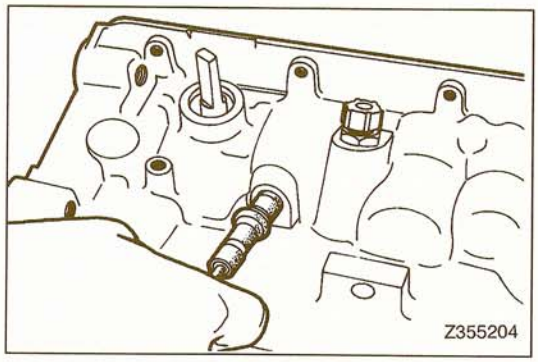


(36) Insert the throttle cable in the case, using care not to damage the O-ring.

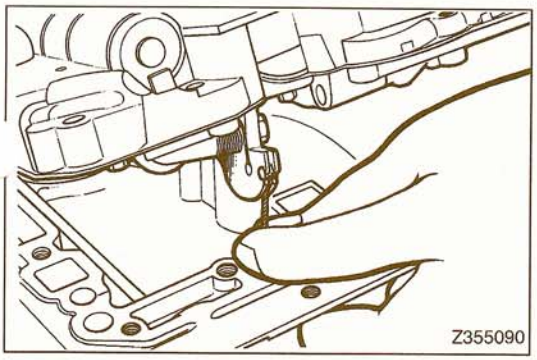


(37) Install accumulator pistons and springs; No. 1 (B2), No. 2 (C2) and No. 3 (C1) from front side.

NOTE
For identification of accumulator springs, refer to P.23D-8.

(38) Install throttle cable to the throttle cam of the valve body assembly.

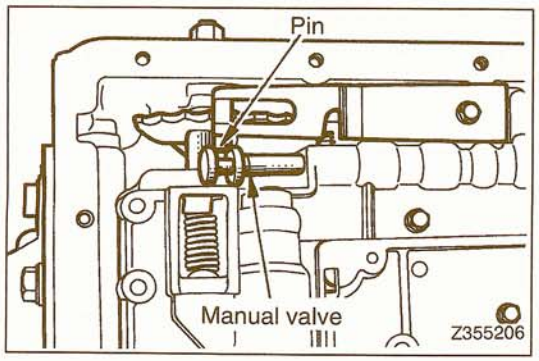


(39) Install two or three valve body attaching bolts temporarily and place the manual valve lever pin in the manual valve groove.

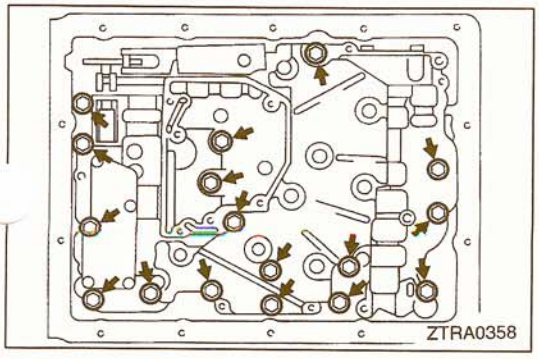


(40) Install 17 valve body attaching bolts and tighten uniformly to specified torque.

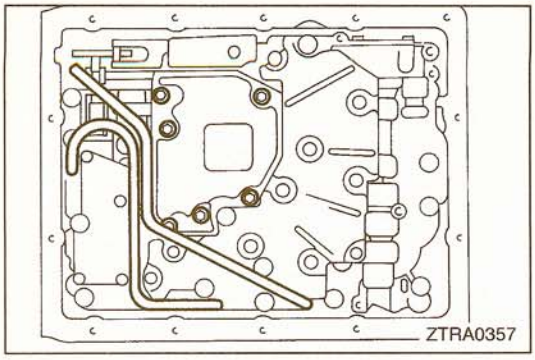


(41)Install the oil screen and spacer.
(42)Shift to "L" and "P" to check that the detent spring roller is completely seated in each portion of the detent lever
(43)Install the oil pipe.

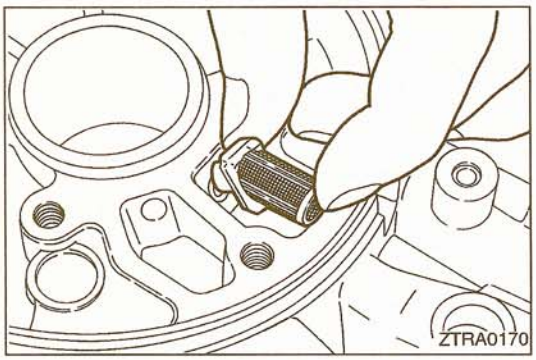


(44)Attach the magnet to the oil pan (to area directly below the oil screen).
(45)Install the oil pan with oil pan gasket attached. First tighten 14 bolts temporarily and then tighten to specified torque uniformly.
(46)Install the filter.

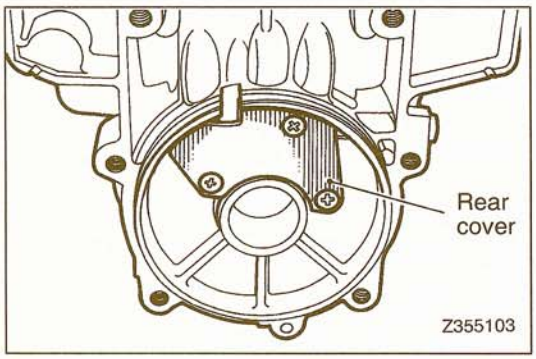


(47)Install the rear cover on the transmission rear with a rear cover gasket.

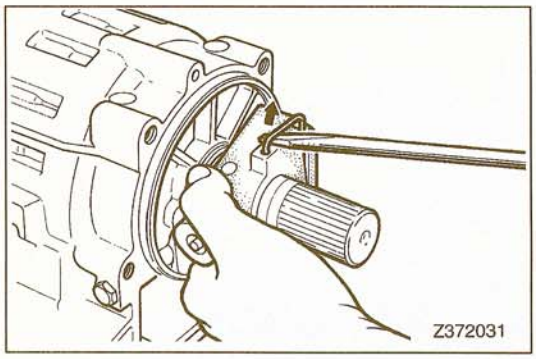


(48)Insert a slot screwdriver between the governor retaining ring and governor body and install the governor to the output shaft.

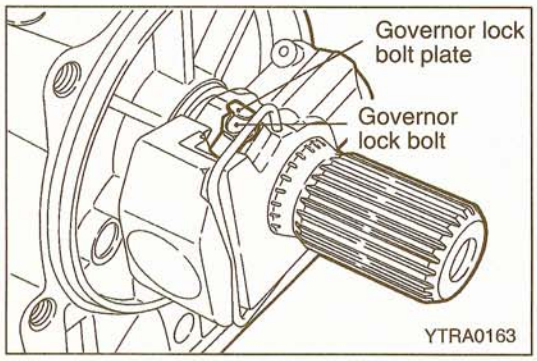


(49)Stake the plate on the governor lock bolt.

TSB Revision

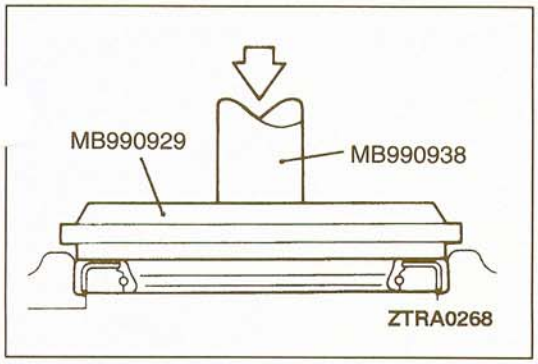


(50) Using a special tool, install an oil seal on the adaptor. After installation, pack the lips with grease.

(51) Apply a sealant to both sides of the adaptor gasket.

**Specified sealant:**
**Mitsubishi genuine sealant Part No. 997740 or equivalent**

**Caution**
**Squeeze the sealant out evenly to make sure that it is not broken or excessively supplied.**

(52) Install the adapter and gasket.

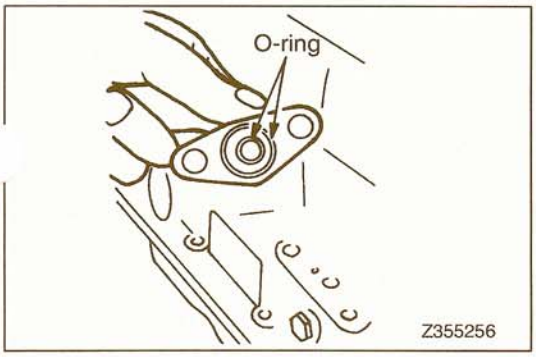


(53) Install the O.D. solenoid.

**Caution**
**Be sure to use two O-rings.**

(54) Install torque converter to transmission.
(55) Install the transfer assembly.

# OIL PUMP

23300850015

## DISASSEMBLY AND REASSEMBLY

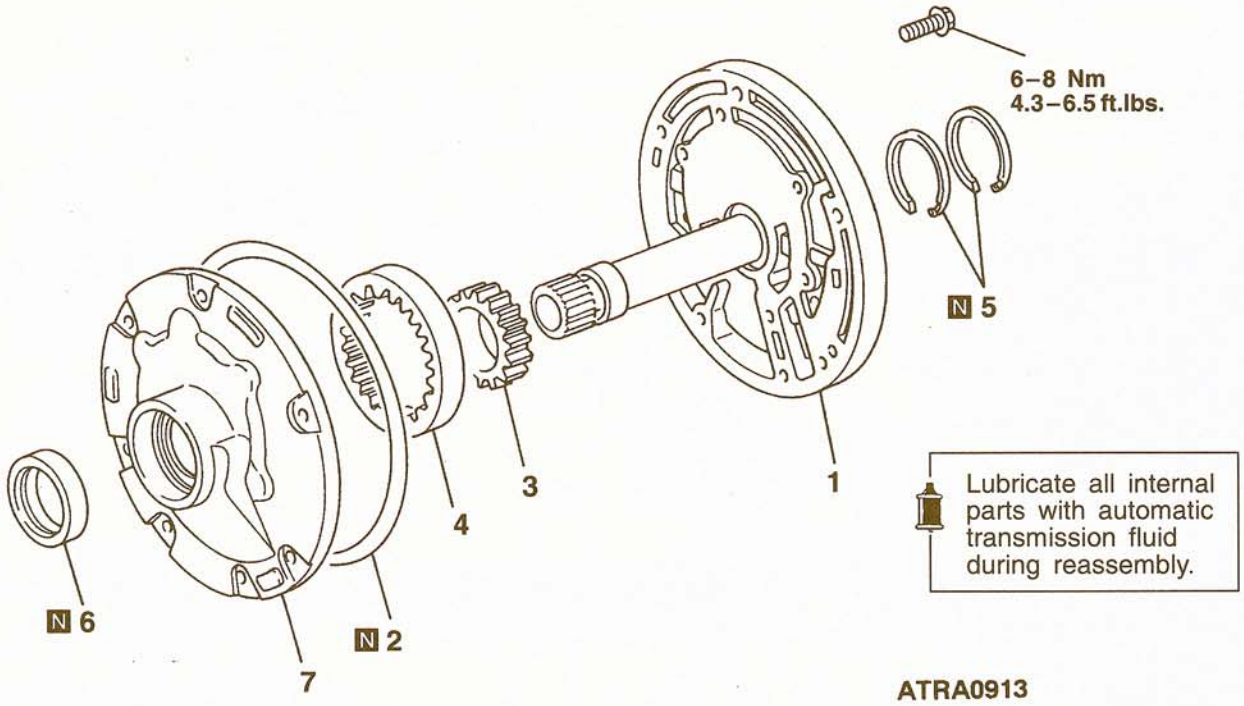


**Disassembly steps**

- ▶D◀ 1. Stator support
- 2. O-ring
- ◀A▶ ▶C◀ 3. Oil pump drive gear
- ◀A▶ ▶C◀ 4. Oil pump driven gear
- ▶B◀ 5. Seal ring
- ▶A◀ 6. Oil seal
- 7. Oil pump body

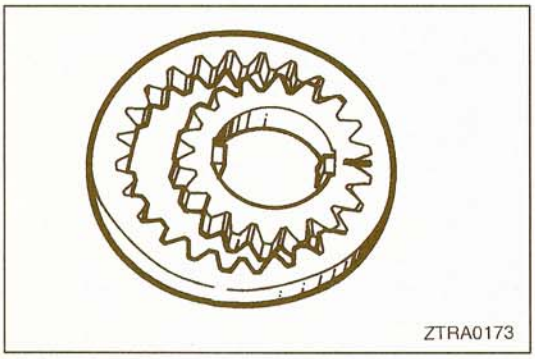


## DISASSEMBLY SERVICE POINT

### ◀A▶ OIL PUMP DRIVE GEAR / OIL PUMP DRIVEN GEAR REMOVAL

(1) Take out the oil pump drive gear and driven gear from the pump body. Put mating marks on the side of removed gears for their reassembly in correct direction. (Use felt marker or equivalent.)

TSB Revision

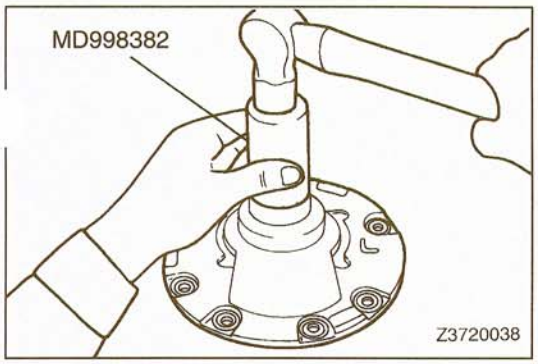


## REASSEMBLY SERVICE POINTS

### ▶A◀ OIL SEAL INSTALLATION

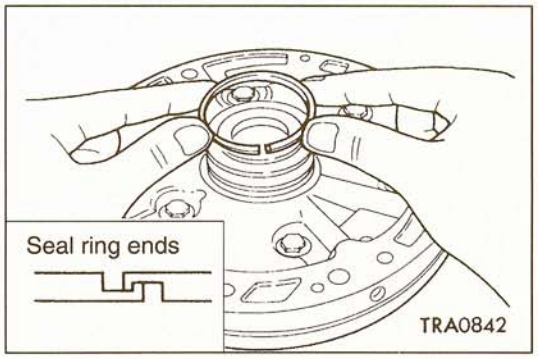


### ▶B◀ SEAL RINGS INSTALLATION

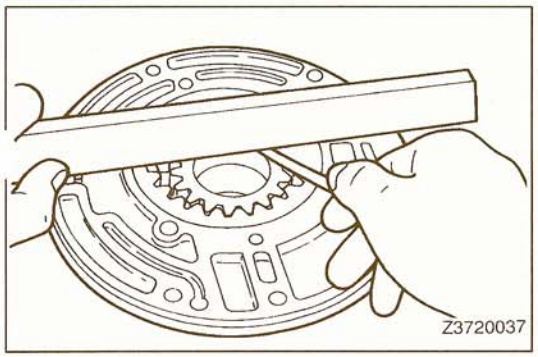


### ▶C◀ OIL PUMP DRIVEN GEAR / OIL PUMP DRIVE GEAR INSTALLATION

(1) Install the driven and drive gears on the oil pump body in correct directions according to the marks put during disassembly.
(2) Using a steel straightedge and a feeler gauge, measure the side clearance of drive and driven gears.

**Standard value: 0.02–0.05 mm (.0008–.0020 in.)**

**Limit: 0.1 mm (.004 in.)**

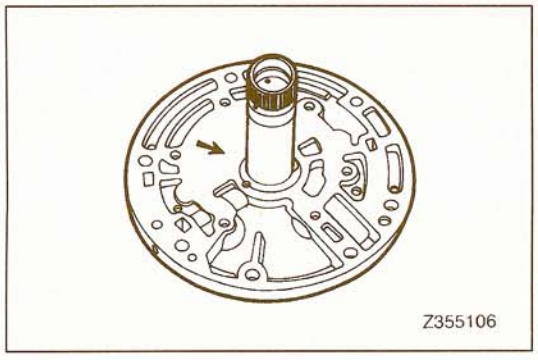


### ▶D◀ STATOR SUPPORT INSTALLATION

(1) Damage or wear of the stator support surface in contact with the oil pump gear (indicated by arrow).

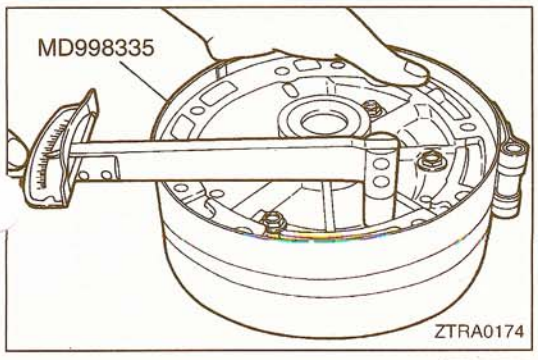


(2) Assemble the body and stator support and tighten the six bolts finger-tight.
(3) Tighten outside of the cover and support by using the special tool.
(4) Tighten the bolts to specified torque.

# OVERDRIVE CLUTCH

23300880014

## DISASSEMBLY AND REASSEMBLY

Lubricate all internal parts with automatic transmission fluid during reassembly.

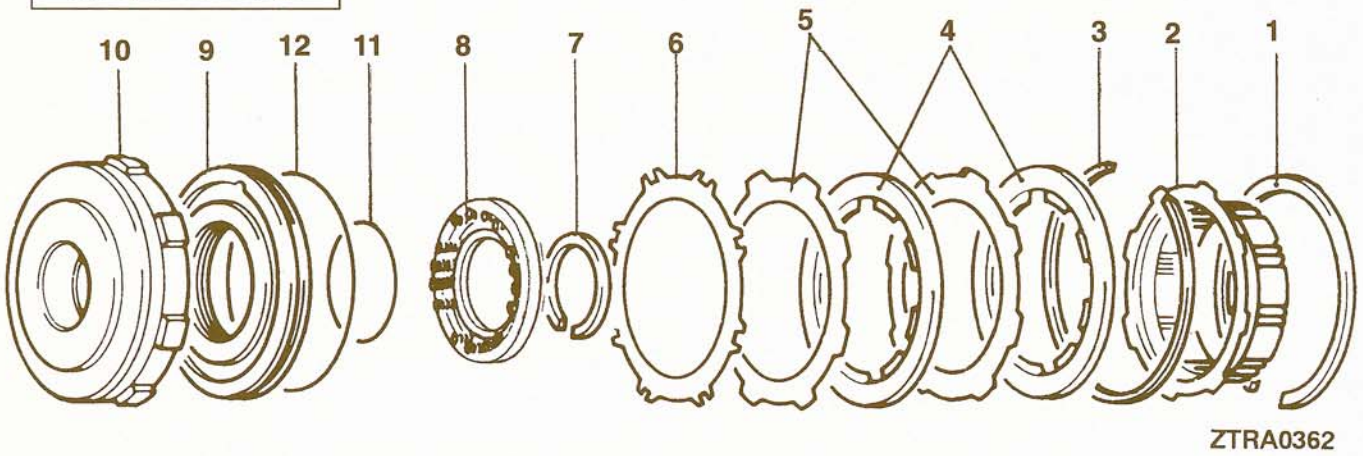


ZTRA0362

**Disassembly steps**

1. Snap ring No. 2
2. OD brake hub
3. ▶D◀ Snap ring No. 1
4. ▶C◀ Clutch disc
5. ▶C◀ Clutch plate
6. ▶C◀ Cushion plate
7. ◀A▶ ▶B◀ Snap ring
8. Return spring assembly
9. ◀B▶ ▶A◀ O.D. clutch piston
10. O.D. clutch cylinder
11. O-ring
12. O-ring

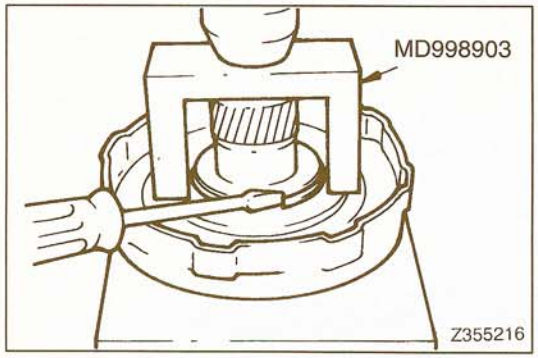


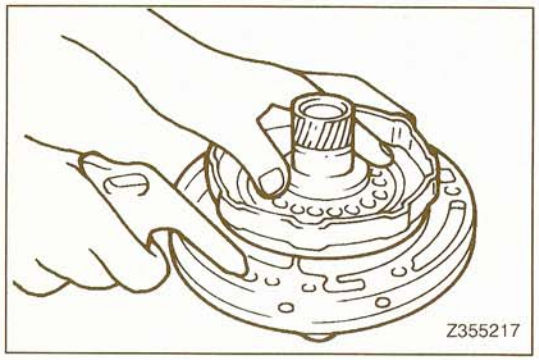


## DISASSEMBLY SERVICE POINTS

### ◀A▶ SNAP RING REMOVAL

(1) Compress the spring and remove the snap ring by using the special tool.

### ◀B▶ OVERDRIVE CLUTCH PISTON REMOVAL

(1) Install the O.D. clutch cylinder on the oil pump and blow air into the oil pump oil hole to remove the piston.

TSB Revision

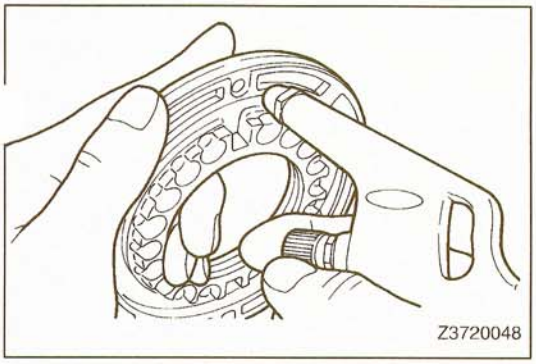


## REASSEMBLY SERVICE POINTS

### ▶A◀ OVERDRIVE CLUTCH PISTON INSPECTION

(1) Check that the check ball is free by shaking the piston.
(2) Check that the valve does not leak by applying low-pressure compressed air.

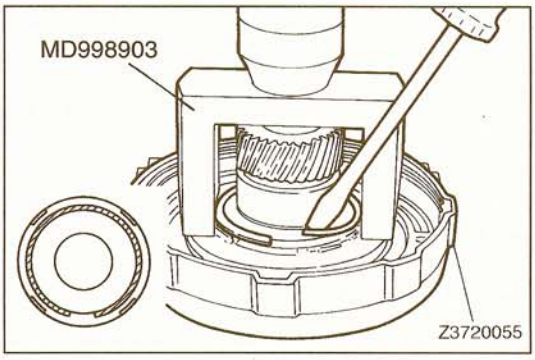


### ▶B◀ SNAP RING INSTALLATION

(1) Place the special tool on the spring retainer, and compress the springs on shop press.
(2) Install the snap ring with a screwdriver.
Be sure the end gap of the snap ring is not aligned with the spring retainer claw.

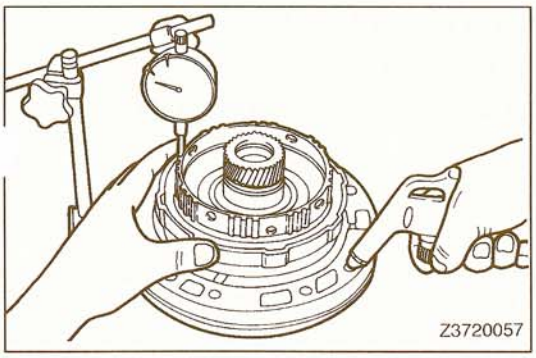


### ▶C◀ OVERDRIVE CLUTCH STROKE INSPECTION

(1) Place the cushion plate, clutch plates, and clutch discs into the cylinder.
(2) Install the overdrive brake hub and snap ring No. 2 (the wider one). Do not install snap ring No. 1 (the narrower one).
(3) Install the overdrive clutch cylinder onto the oil pump body.
(4) Using a dial indicator, measure the stroke applying and releasing the compressed air (400–800 kPa, 58–116 psi) as shown.

**Standard value: 1.92–2.64 mm (.0756–.1039 in.)**

(5) Remove snap ring No. 2 and overdrive brake hub.

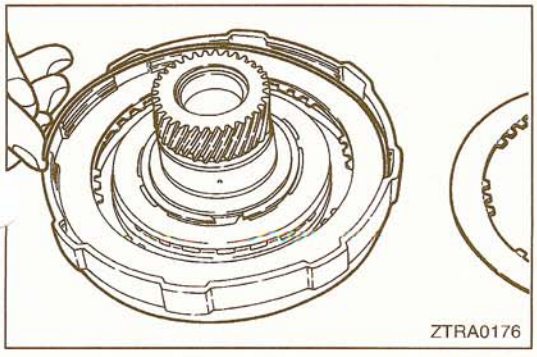


### ▶D◀ SNAP RING NO. 1 INSTALLATION

NOTE
To make the job easier, first remove one clutch disc, fit snap ring No. 1 into position, then reinstall the clutch disc back again.

# OVERDRIVE PLANETARY GEAR

23300910010

## DISASSEMBLY AND REASSEMBLY

Lubricate all internal parts with automatic transmission fluid during reassembly.

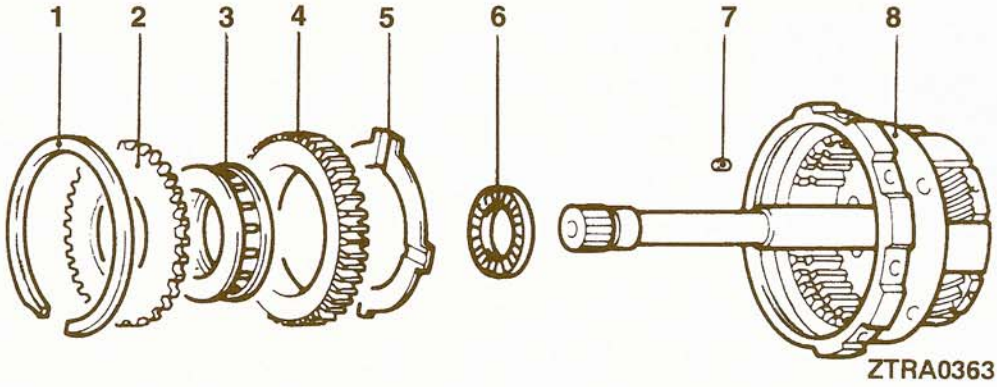


**Disassembly steps**

1. Snap ring No. 3
2. One-way clutch retainer
- ▶B◀ 3. One-way clutch outer race
- ▶B◀ 4. One-way clutch assembly
- ▶A◀ 5. Thrust washer
6. Thrust bearing #3
7. Pinion shaft plug (4)
8. O.D. planetary gear

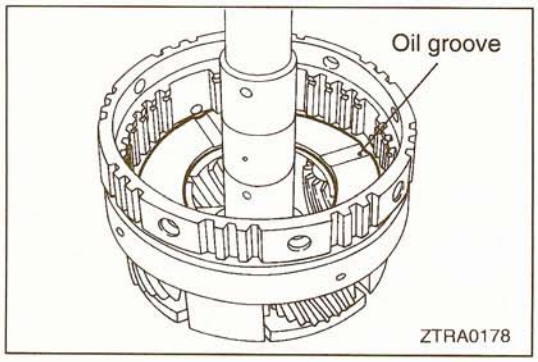


## REASSEMBLY SERVICE POINTS

### ▶A◀ THRUST WASHER INSTALLATION

(1) Install the thrust washer so that its oil groove faces up.

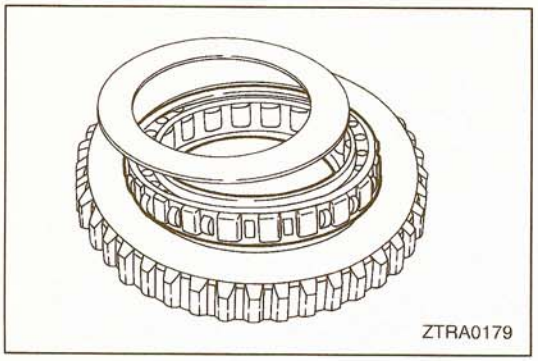


### ▶B◀ ONE-WAY CLUTCH REASSEMBLY

(1) Reassemble the one-way clutch assembly so that it is oriented as shown.

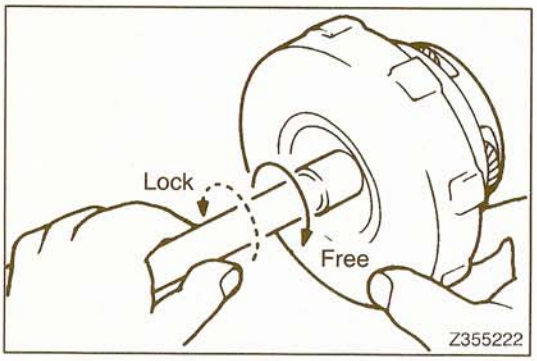


## INSPECTION

23300920013

### ONE-WAY CLUTCH

(1) With the clutch cylinder held by hand, turn the input shaft clockwise to see that the shaft turns smoothly and turn it counterclockwise to see that the shaft is locked.

TSB Revision

# OVERDRIVE BRAKE

23300940019

## DISASSEMBLY AND REASSEMBLY

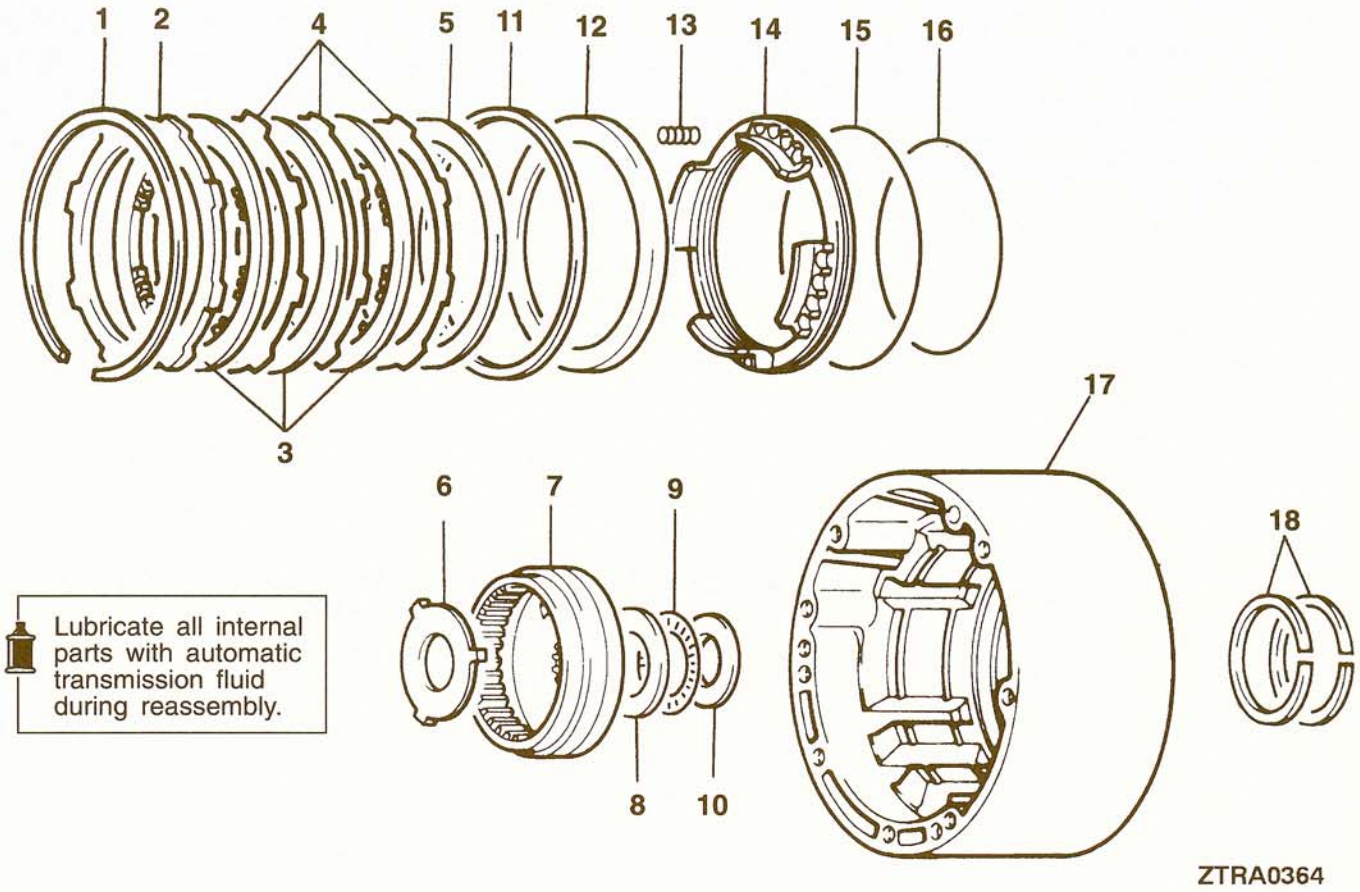


**Disassembly steps**

- ▶D◀ 1. Snap ring
- ▶C◀ 2. Flange
- ▶C◀ 3. Brake disc
- ▶C◀ 4. Brake plate
- ▶C◀ 5. Cushion plate
- 6. Thrust race
- 7. Planetary ring gear
- ▶B◀ 8. Thrust bearing race #4
- ▶B◀ 9. Thrust bearing #5
- ▶B◀ 10. Thrust bearing race #6
- ▶A◀ 11. Snap ring
- ▶A◀ 12. Spring retainer
- ▶A◀ 13. Return spring
- ◀A▶ 14. Brake piston
- 15. O-ring
- 16. O-ring
- 17. O.D. case
- 18. Seal ring

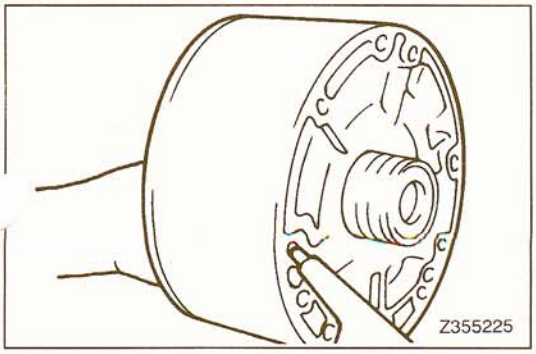


## DISASSEMBLY SERVICE POINT

### ◀A▶ BRAKE PISTON REMOVAL

(1) Blow air into the O.D. case through the oil hole to remove the piston.

TSB Revision

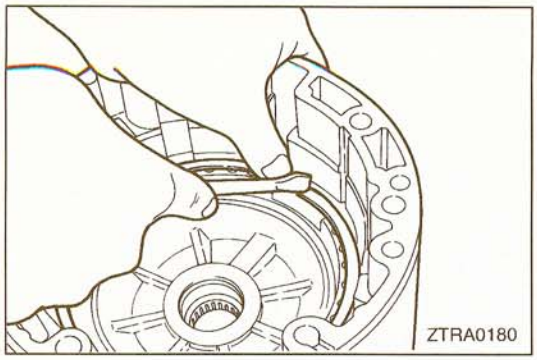


## REASSEMBLY SERVICE POINTS

### ▶A◀ RETURN SPRING, SPRING RETAINER AND SNAP RING INSTALLATION

(1) Fit the spring into the piston carefully not allowing the spring to tilt.
(2) Holding the retainer with your fingers, fit the snap ring into the groove in the O.D. case.

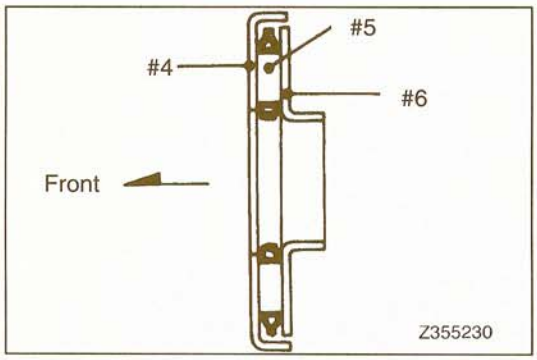


### ▶B◀ THRUST BEARING RACE #4, THRUST BEARING #5 AND THRUST BEARING RACE #6 INSTALLATION

(1) Make sure that thrust bearing races #4 and #6 and thrust bearing #5 face as shown when they are installed.

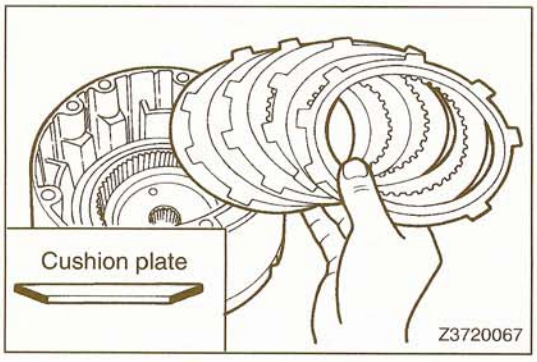


### ▶C◀ CUSHION PLATE, BRAKE PLATE, BRAKE DISC AND FLANGE INSTALLATION

(1) Make sure that the cushion plate and flange face the correct direction when installed.

Cushion plate: rounded end down
Flange: flat end down

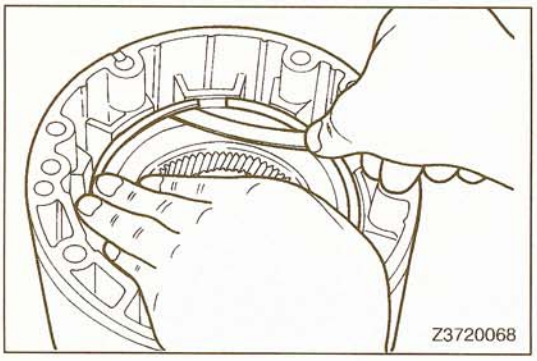


### ▶D◀ OVERDRIVE BRAKE CLEARANCE INSPECTION

(1) Measure the distance between snap ring and flange with feeler gauge to check the brake clearance.

**Standard value: 0.65–2.21 mm (.0256–.0870 in.)**

# FORWARD CLUTCH

23301030012

## DISASSEMBLY AND REASSEMBLY

Lubricate all internal parts with automatic transmission fluid during reassembly.

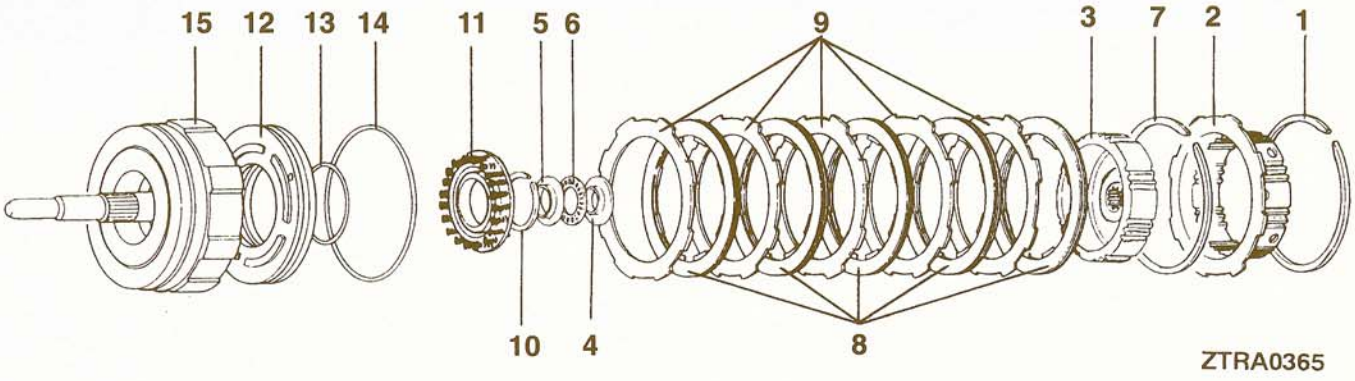


**Disassembly steps**

- ▶E◀ 1. Snap ring
- 2. Direct clutch hub
- 3. Forward clutch hub
- 4. Thrust bearing race #11
- 5. Thrust bearing #10
- 6. Thrust bearing race #9
- ▶D◀ 7. Snap ring
- ▶C◀ 8. Clutch disc
- ▶C◀ 9. Clutch plate
- ◀A▶ ▶B◀ 10. Snap ring
- 11. Return spring assembly
- ◀B▶ ▶A◀ 12. Forward clutch piston
- 13. O-ring
- 14. O-ring
- 15. Forward clutch cylinder assembly

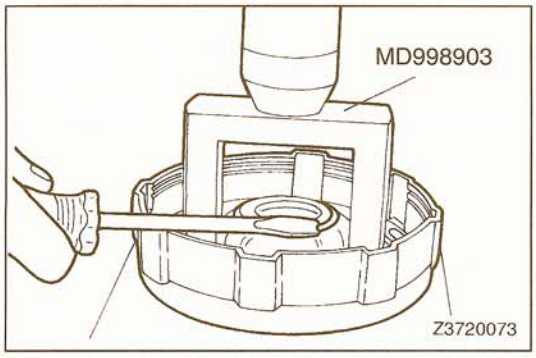


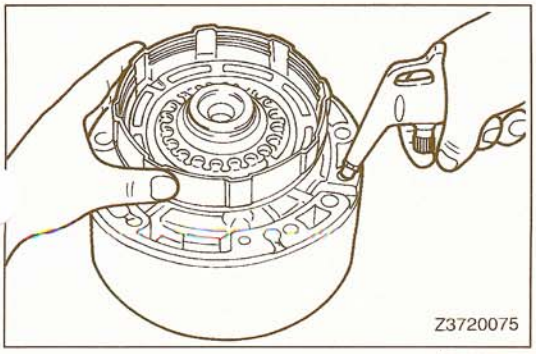


## DISASSEMBLY SERVICE POINTS

### ◀A▶ SNAP RING REMOVAL

(1) Place the front clutch cylinder on a press bench and compress the clutch return spring by using the special tool. Remove the snap ring.

### ◀B▶ FORWARD CLUTCH PISTON REMOVAL

(1) Assemble the forward clutch cylinder and piston on the overdrive case and force out the piston by compressed air.

TSB Revision

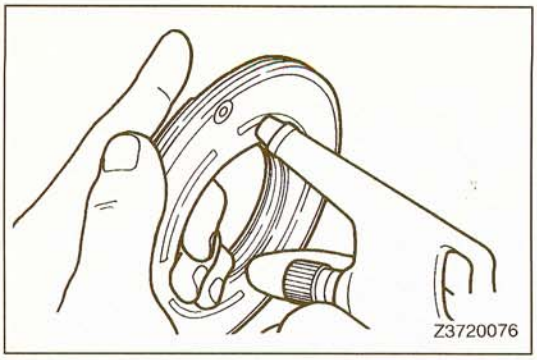


## REASSEMBLY SERVICE POINTS

### ▶A◀ FORWARD CLUTCH PISTON INSPECTION

(1) Check that check ball is free by shaking the forward clutc piston.
(2) Check that the valve does not leak by applying low-pressure compressed air.

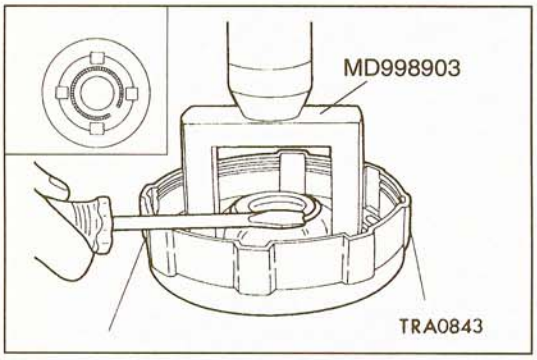


### ▶B◀ SNAP RING INSTALLATION

(1) Set the special tool on the spring retainer, and compress the springs on a shop press.
(2) Install the snap ring using a screwdriver.
Be sure the end gap of snap ring is not aligned with the spring retainer claw.

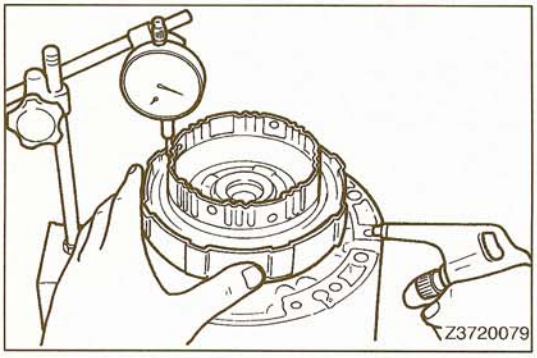


### ▶C◀ FORWARD CLUTCH PISTON STROKE INSPECTION

(1) Install the clutch plates and discs alternately. Do not install the snap ring (thinner) yet.
(2) Install the direct clutch hub and snap ring (thicker).
(3) Install the forward clutch cylinder assembly onto the overdrive case.
Using a dial indicator, measure the stroke applying and releasing the compressed air (400–800 kPa, 58–116 psi).

**Standard value: 1.43–2.93 mm (.0562–.1153 in.)**

(4) After the check, remove the snap ring and direct clutch hub.

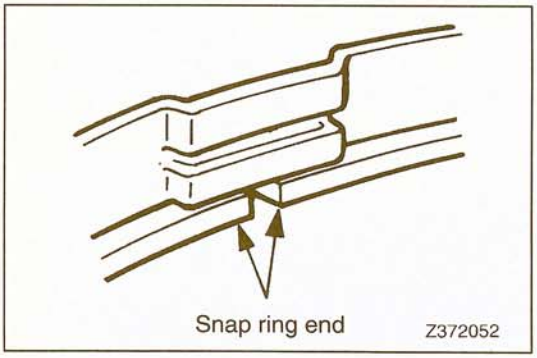


### ▶D◀ SNAP RING INSTALLATION

(1) With one clutch disc removed, fit the snap ring into position.
(2) The snap ring should be located with its ends as illustrated.
(3) Reinstall the clutch disc which has been removed in step (1).

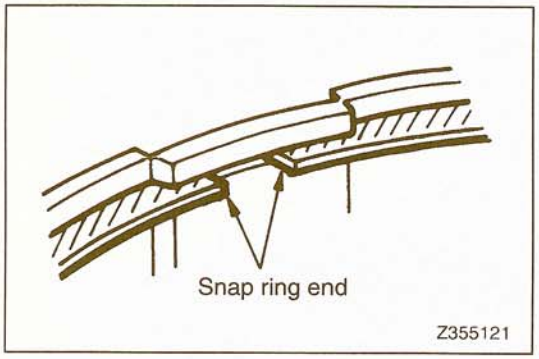


### ▶E◀ SNAP RING INSTALLATION

(1) Install the snap ring so that its ends are located as shown on the left.

# DIRECT CLUTCH

23300970018

## DISASSEMBLY AND REASSEMBLY

Lubricate all internal parts with automatic transmission fluid during reassembly.

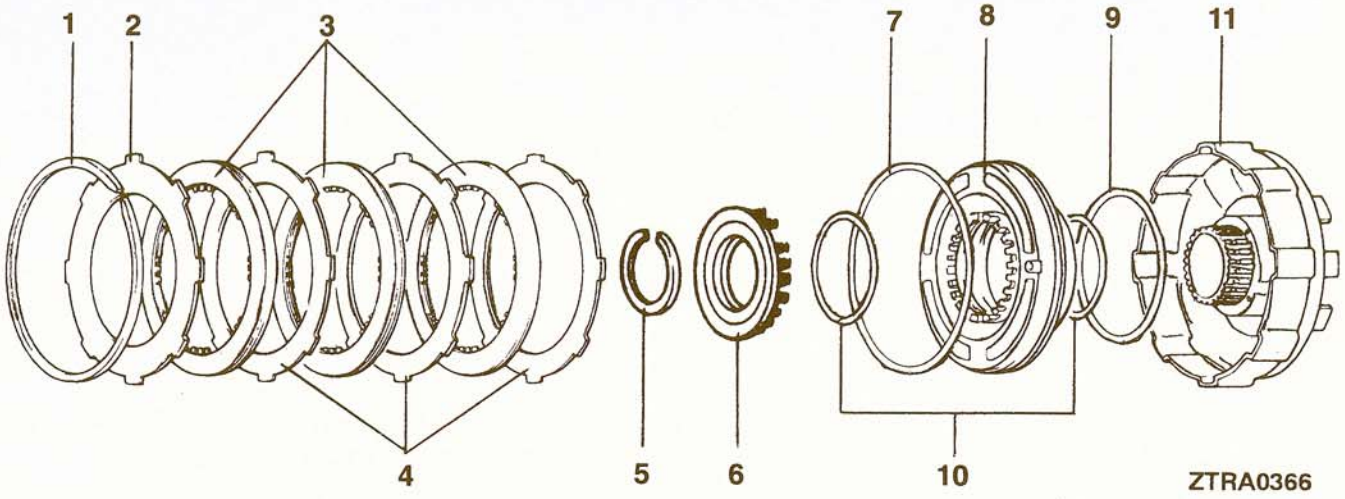


**Disassembly steps**

- ▶C◀ 1. Snap ring
- ▶C◀ 2. Flange
- ▶C◀ 3. Clutch disc
- ▶C◀ 4. Clutch plate
- ◀A▶ ▶B◀ 5. Snap ring
- 6. Return spring assembly
- ◀B▶ ▶A◀ 7. Direct clutch piston
- 8. O-ring
- 9. O-ring
- 10. O-ring
- 11. Direct clutch cylinder

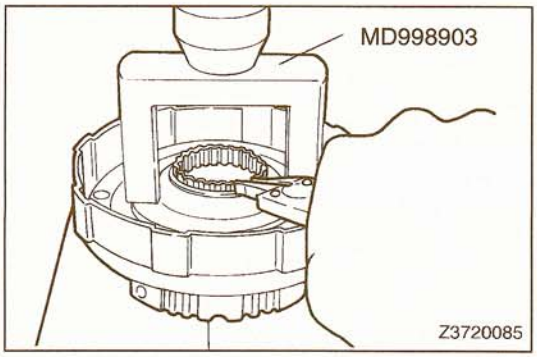


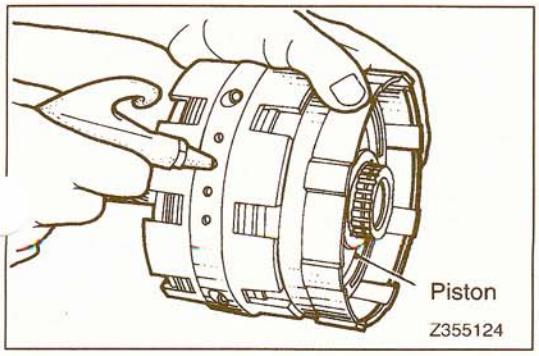


## DISASSEMBLY SERVICE POINTS

### ◀A▶ SNAP RING REMOVAL

(1) Place the rear clutch on a press bench, compress the return spring by using the special tool to remove the snap ring.

### ◀B▶ DIRECT CLUTCH PISTON REMOVAL

(1) Install the clutch cylinder in the center support and blow air through the oil hole of the center support to remove the piston from the cylinder.

TSB Revision

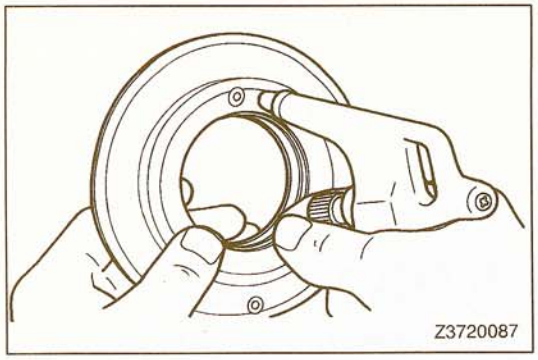


## REASSEMBLY SERVICE POINTS

### ▶A◀ DIRECT CLUTCH PISTON INSPECTION

(1) Check that the check ball is free by shaking each pistc
(2) Check that the valve does not leak by applying low-pre. sure compressed air.

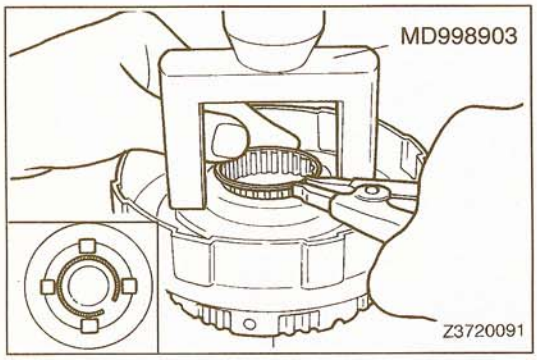


### ▶B◀ SNAP RING INSTALLATION

(1) Compress the return spring, fit the snap ring by using the special tool.
(2) Be sure the end gap of the snap ring is not aligned with the spring retainer claw.

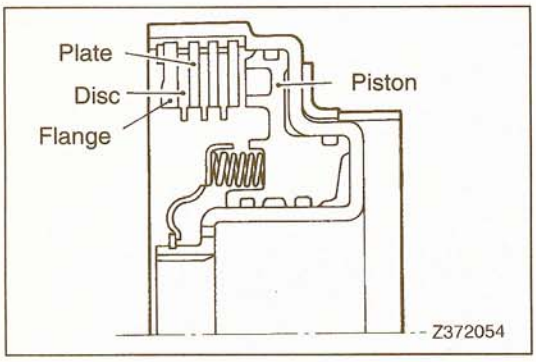


### ▶C◀ CLUTCH PLATE, CLUTCH DISC, FLANGE AND SNAP RING INSTALLATION

(1) Make sure that the flat end of the flange faces down.

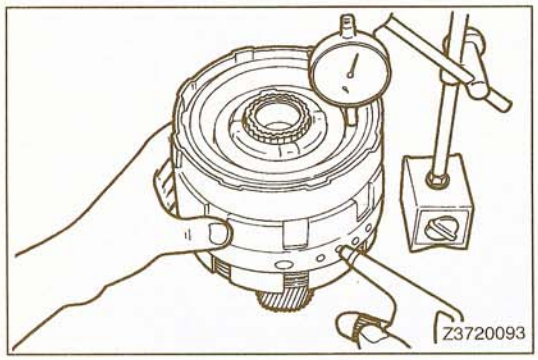


(2) Install the direct clutch onto the center support. Using a dial indicator, measure the stroke applying and releasing the compressed air (400–800 kPa, 58–116 psi) as shown.

**Standard value: 0.91–1.99 mm (.0358–.0783 in.)**

# CENTER SUPPORT

23301000013

## DISASSEMBLY AND REASSEMBLY

Lubricate all internal parts with automatic transmission fluid during reassembly.

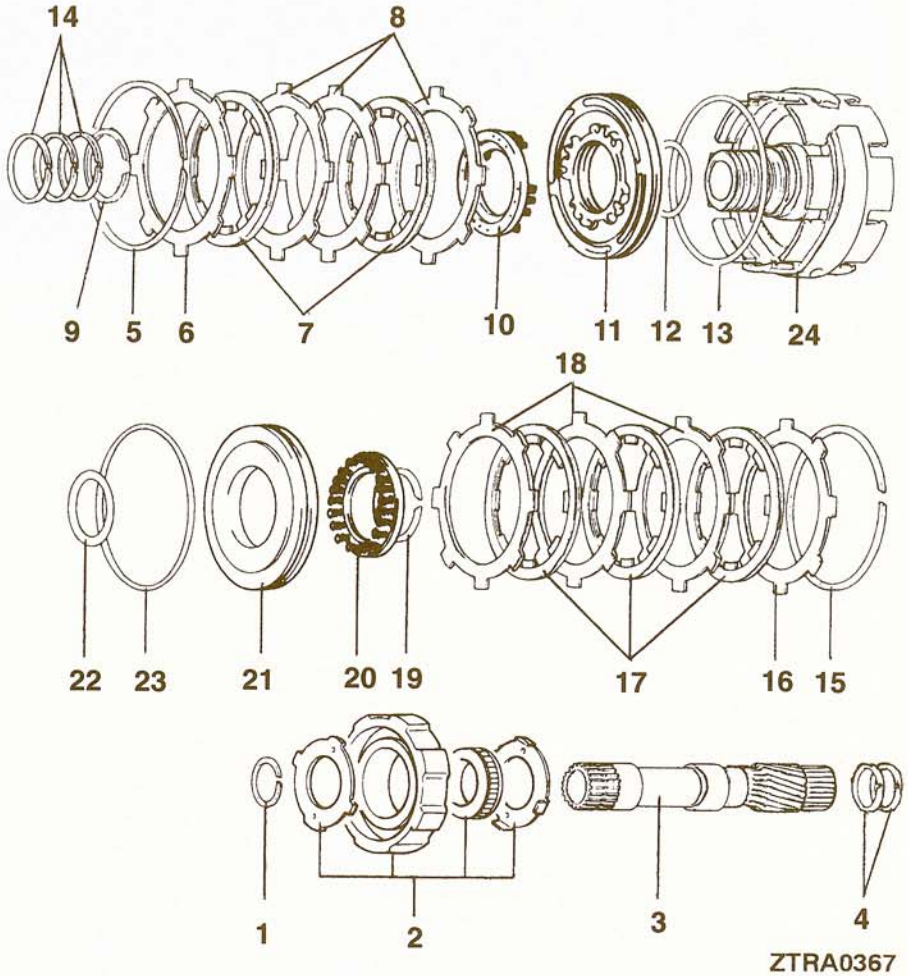


ZTRA0367

**Disassembly steps**

1. Snap ring
2. ▶E◀ One-way clutch assembly
3. Planetary sun gear
4. Seal ring
5. ▶D◀ Snap ring
6. ▶D◀ Flange
7. ▶D◀ Brake disc
8. ▶D◀ Brake plate
9. ◀A▶ ▶C◀ Snap ring
10. Return spring assembly
11. ◀B▶ No. 1 brake piston
12. O-ring
13. O-ring
14. Seal ring
15. ◀C▶ ▶B◀ Snap ring
16. ▶B◀ Flange
17. ▶B◀ Brake disc
18. ▶B◀ Brake plate
19. ◀C▶ ▶A◀ Snap ring
20. Return spring assembly
21. ◀D▶ No. 2 brake piston
22. O-ring
23. O-ring
24. Center support

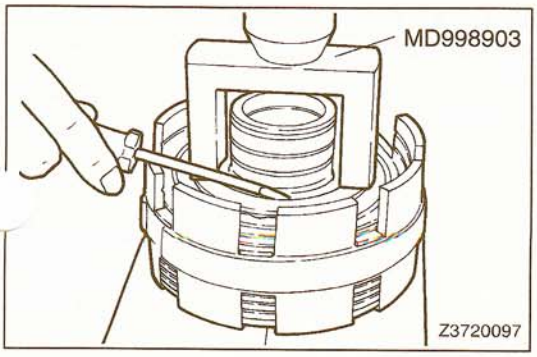


## DISASSEMBLY SERVICE POINTS

### ◀A▶ SNAP RING REMOVAL

(1) Set the special tool on the spring retainer and compress the springs with a shop press.
Using a screwdriver, remove the snap ring.

TSB Revision

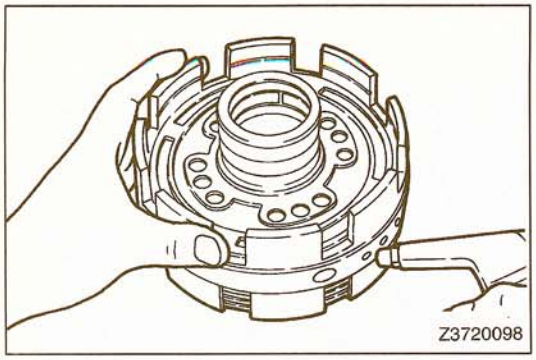


### ◀B▶ NO. 1 BRAKE PISTON REMOVAL

(1) Blow compressed air through the center support oil hole to remove the No. 1 brake piston.

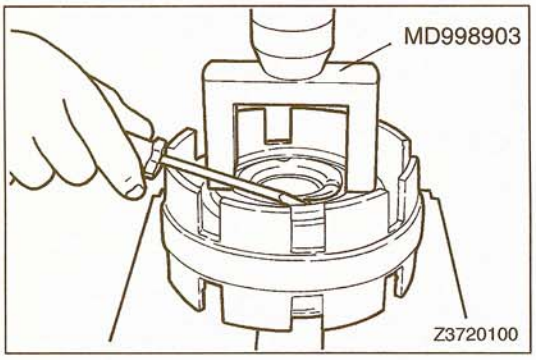


### ◀C▶ SNAP RING REMOVAL

(1) Set the special tool on the spring retainer and compress the springs with a shop press.
Using a screwdriver, remove the snap ring.

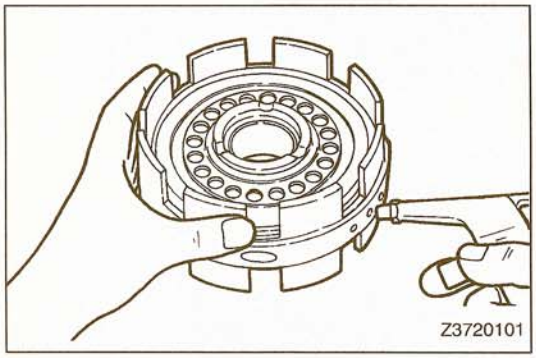


### ◀D▶ NO. 2 BRAKE PISTON REMOVAL

(1) Blow compressed air through the center support oil hole to remove the No. 2 brake piston.

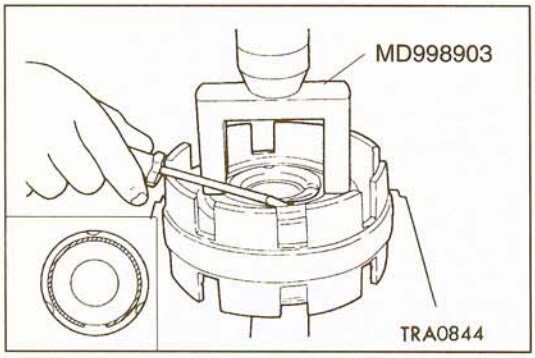


## REASSEMBLY SERVICE POINTS

### ▶A◀ SNAP RING INSTALLATION

(1) Set the special tool on the spring retainer, and compress the springs on a shop press.
Install the snap ring with a screwdriver.
Be sure the end gap of the snap ring is not aligned with the spring retainer claw.

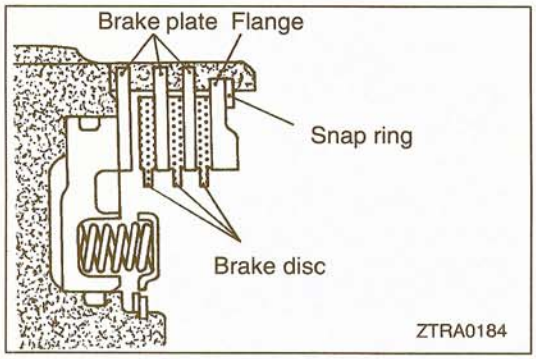


### ▶B◀ BRAKE PLATE, BRAKE DISC, FLANGE AND SNAP RING INSTALLATION

(1) Make sure that the flat end of the flange faces down.

TSB Revision

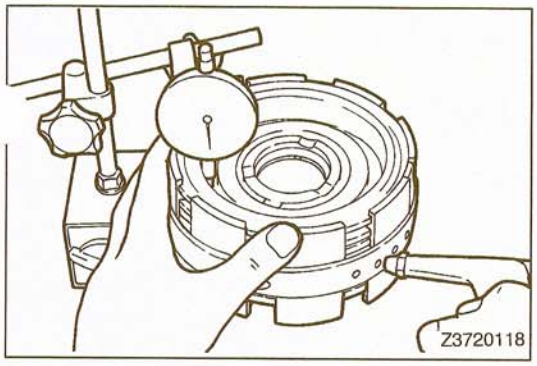


(2) Using a dial indicator, measure the stroke applying and releasing the compressed air (400–800 kPa, 58–116 psi) as shown.

**Standard value: 1.01–2.25 mm (.0398–.0886 in.)**

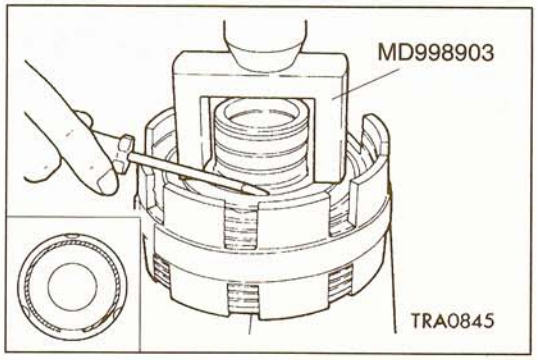


### ▶C◀ SNAP RING INSTALLATION

(1) Set the special tool on the spring retainer, and compress the springs on a shop press.
Install the snap ring with a screwdriver.
Be sure the end gap of the snap ring is not aligned with the spring retainer claw.

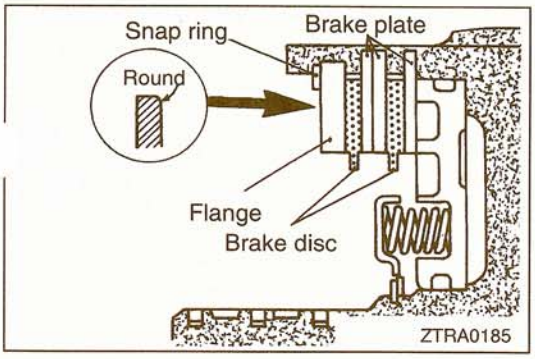


### ▶D◀ BRAKE PLATE, BRAKE DISC, FLANGE AND SNAP RING INSTALLATION

(1) Make sure the brake plates are installed in the correct order and the round edge of the flange faces down.

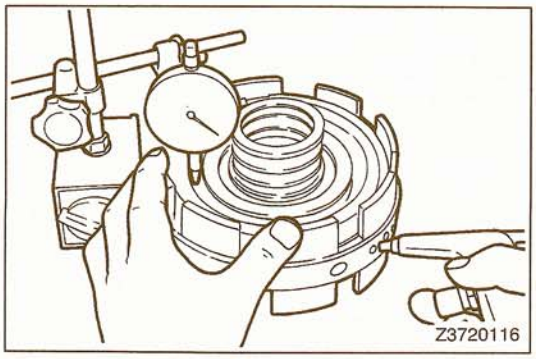


(2) Using a dial indicator, measure the stroke applying and releasing the compressed air (400–800 kPa, 58–116 psi) as shown.

**Standard value: 0.80–1.73 mm (.0315–.0681 in.)**

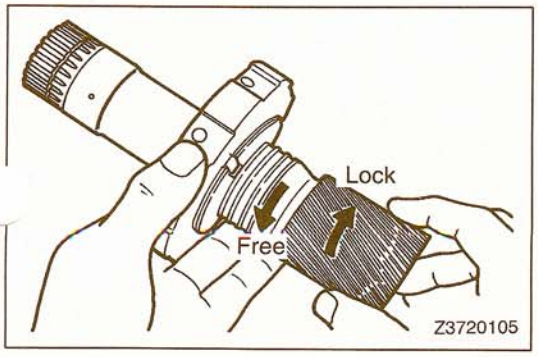


### ▶E◀ ONE-WAY CLUTCH ASSEMBLY INSPECTION

(1) Hold the No. 2 brake hub and turn the planetary sun gear.
The sun gear should turn freely counterclockwise and should lock clockwise.
If the one-way clutch does not operate properly, replace it.

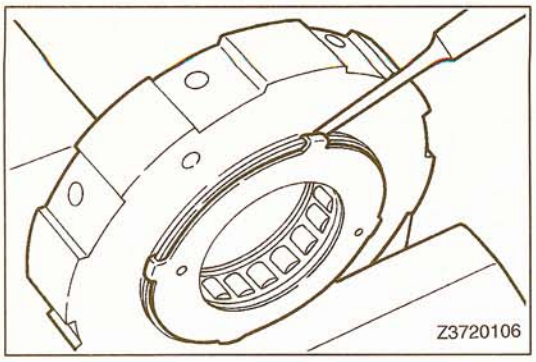


(2) If necessary, replace the one-way clutch:
  (a) Bend the tabs back with a tapered punch.
  (b) Pry off the retainer with a screwdriver. Leave th other retainer on the hub.
  (c) Remove the one-way clutch.

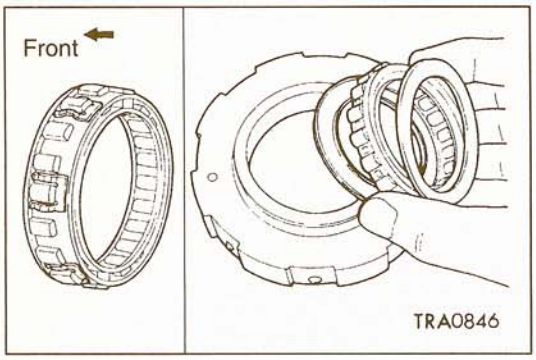


(d) Install the one-way clutch into the brake hub facing the spring cage toward the front.

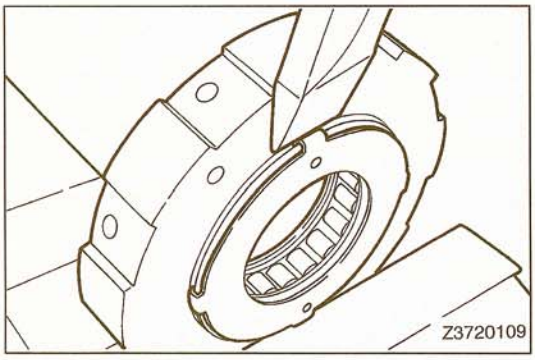


(e) Hold the brake hub in vise with soft jaws, and bend the tabs with a chisel.
(f) Check to make sure that the retainer is centered.

# FRONT PLANETARY GEAR

23301060011

## DISASSEMBLY AND REASSEMBLY

Lubricate all internal parts with automatic transmission fluid during reassembly.

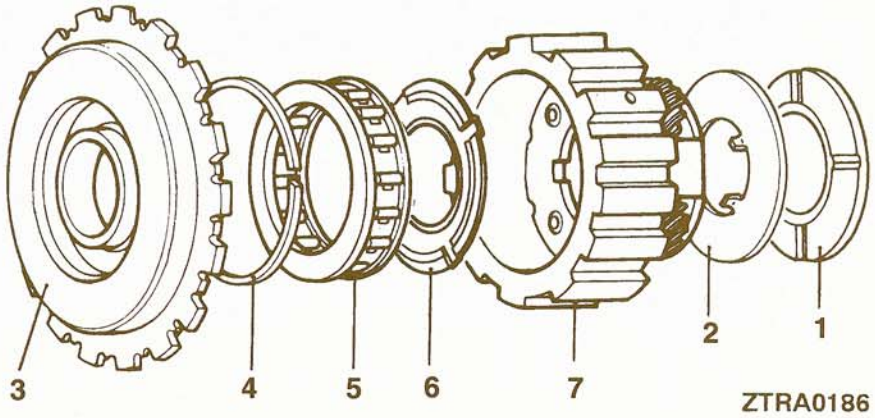


**Disassembly steps**

1. Thrust washer (nylon washer)
2. Thrust washer (steel washer)
▶C◀ 3. One-way clutch inner race
4. Retaining ring
▶B◀ 5. One-way clutch
▶A◀ 6. Thrust washer (nylon washer)
7. Front planetary gear

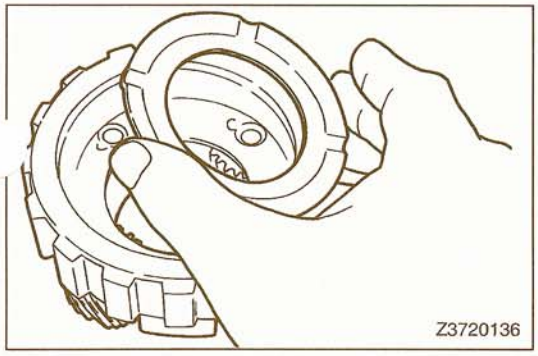


## REASSEMBLY SERVICE POINTS

### ▶A◀ THRUST WASHER INSTALLATION

(1) Install the thrust washer so that its oil grooves face up.

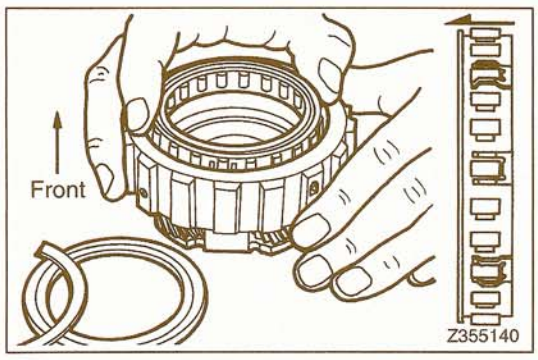


### ▶B◀ ONE-WAY CLUTCH INSTALLATION

(1) Install the one-way clutch into the front planetary gear, ensuring the one-way clutch facing the correct direction.

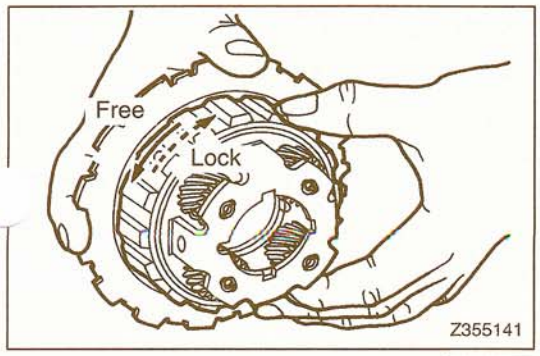


### ▶C◀ ONE-WAY CLUTCH INSPECTION

(1) Fix the inner race and check that the front planetary gear turns smoothly when rotated counterclockwise and that it locks securely when rotated clockwise.

**TSB Revision**

# REAR PLANETARY GEAR AND OUTPUT SHAFT

23301070010

## DISASSEMBLY AND REASSEMBLY

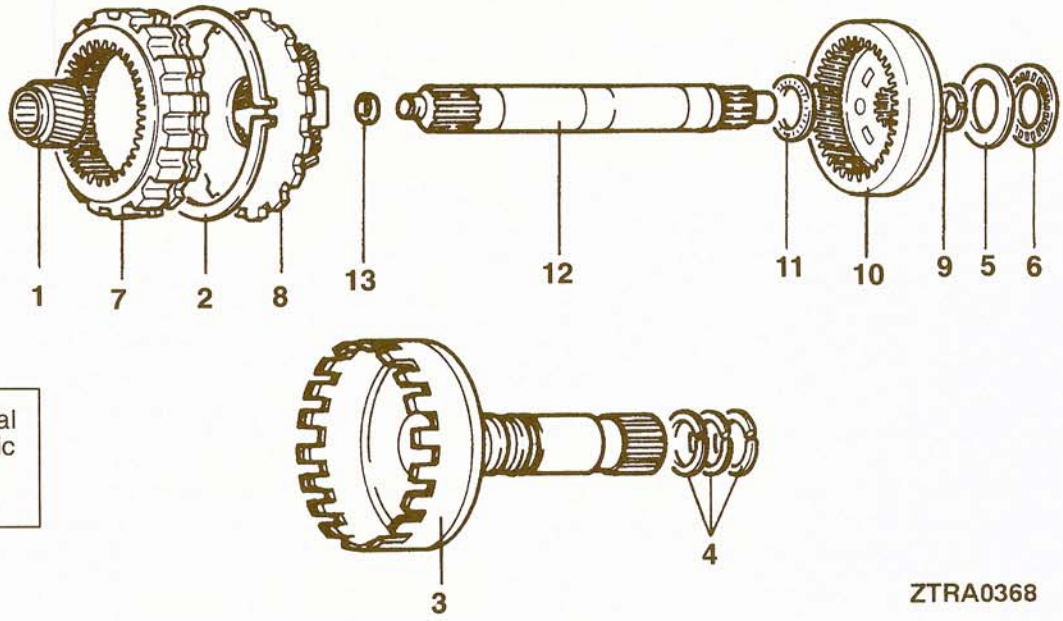


Lubricate all internal parts with automatic transmission fluid during reassembly.

**Disassembly steps**

1. Planetary sun gear
2. ▶A◀ Retaining ring
3. Output shaft assembly
4. Seal ring
5. Thrust bearing race #16
6. Thrust bearing #17
7. Front planetary ring gear
8. Rear planetary gear
9. ◀A▶ Split ring
10. Rear planetary ring gear
11. Thrust bearing #15
12. Intermediate shaft
13. O-ring

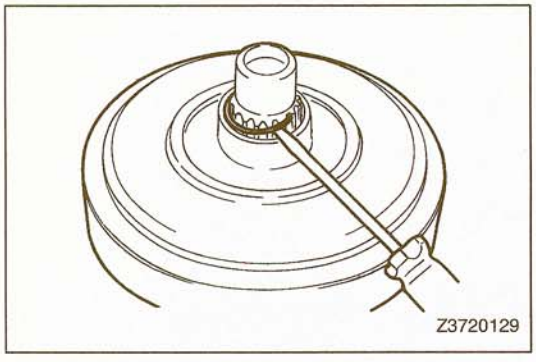


## DISASSEMBLY SERVICE POINT

### ◀A▶ SPLIT RING REMOVAL

(1) Remove the split ring using a screwdriver as shown.

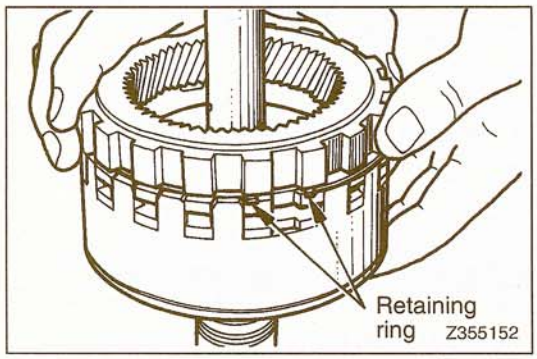


## REASSEMBLY SERVICE POINT

### ▶A◀ RETAINING RING INSTALLATION

(1) Install the snap ring on the front planetary ring gear.
(2) Set the front planetary ring gear on the output shaft drum. Align the ends of the snap ring with the wide gap between the teeth.
(3) While pushing down the front planetary ring gear, squeeze the snap ring ends to install it into the groove.

TSB Revision

# BRAKE NO. 3 PISTON

23301120016

## DISASSEMBLY AND REASSEMBLY

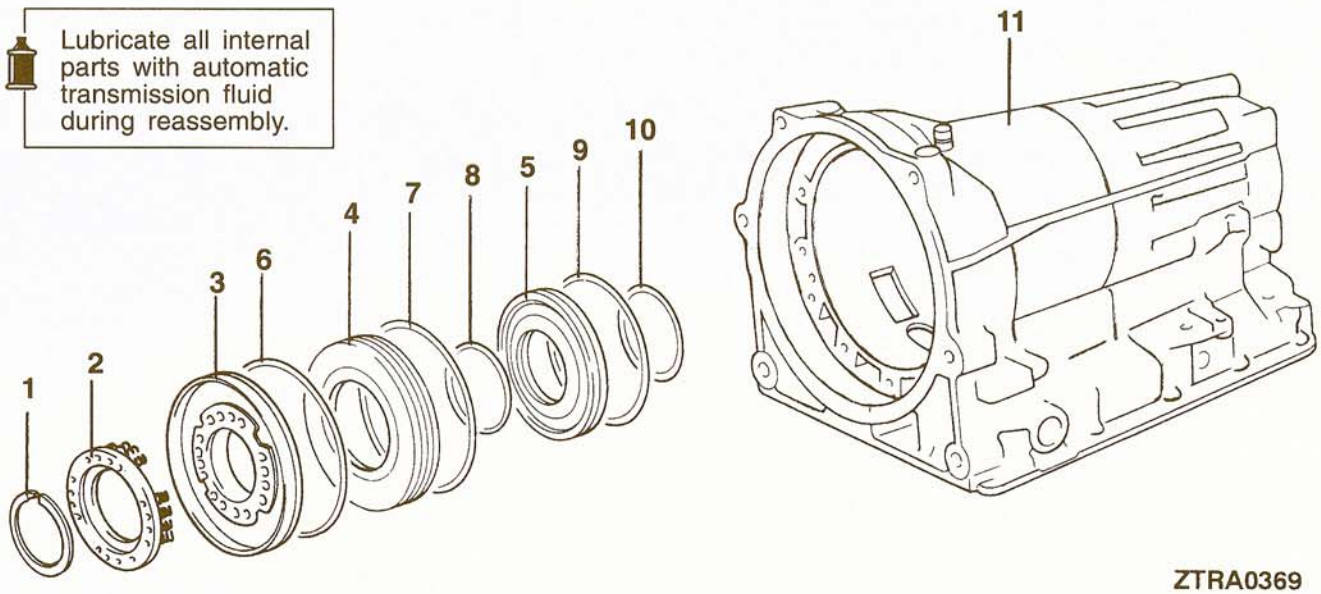


ZTRA0369

**Disassembly steps**

◀A▶ ▶A◀ 1. Snap ring
2. Return spring assembly
◀B▶ 3. Brake No. 3 primary piston
◀B▶ 4. Reaction sleeve
◀B▶ 5. Brake No. 3 secondary piston
6. O-ring
7. O-ring
8. O-ring
9. O-ring
10. O-ring
11. Transmission case

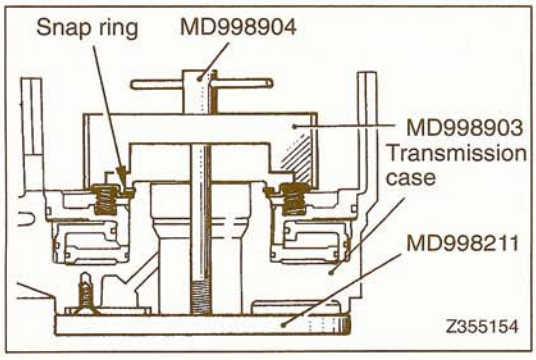


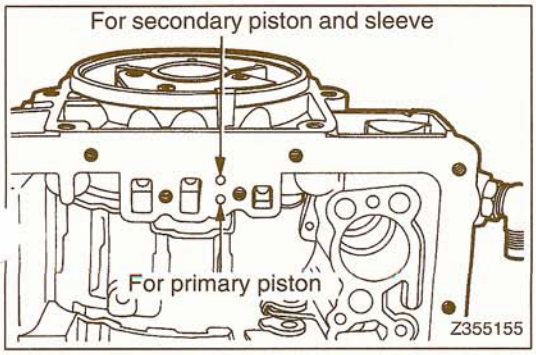


## DISASSEMBLY SERVICE POINTS

### ◀A▶ SNAP RING REMOVAL

(1) Compress the spring and remove the snap ring by using the special tools.

### ◀B▶ PRIMARY PISTON, REACTION SLEEVE AND SECONDARY PISTON REMOVAL

(1) With the front end down, place the transmission case on a workbench. Place several clean shop rags under the case to catch the piston and sleeve. Apply compressed air to the primary and secondary piston oil holes to force the piston and sleeve out.

TSB Revision

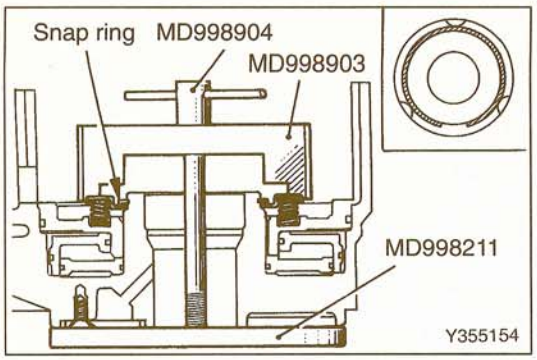


## REASSEMBLY SERVICE POINT

### ▶A◀ SNAP RING INSTALLATION

(1) Compress the springs and fit the snap ring by using th special tools.
(2) Push the snap ring by hand into place. Visually check to make sure it is fully seated and centered by the three lugs on the spring retainer.

# GOVERNOR

23301150015

## DISASSEMBLY AND REASSEMBLY

Lubricate all internal parts with automatic transmission fluid during reassembly.

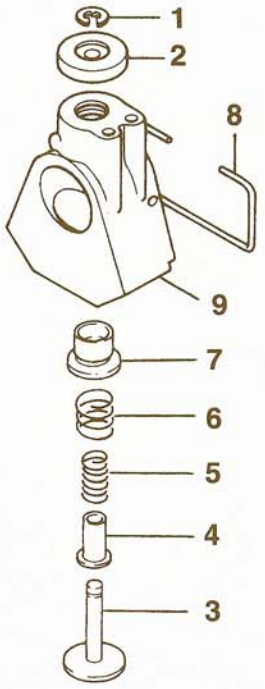


Z372066

**Disassembly steps**

1. E-ring
2. Governor weight
3. Governor valve shaft
4. Secondary weight
5. Inner governor spring
6. Outer governor spring
7. Governor valve
8. Governor retaining ring
9. Governor body

◀A▶ ▶B◀ ▶A◀

TSB Revision

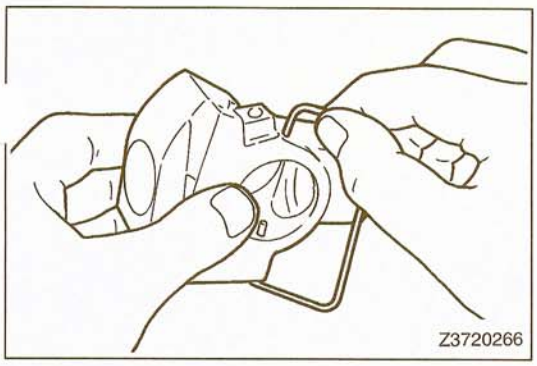


## DISASSEMBLY SERVICE POINT

### ◀A▶ GOVERNOR RETAINING RING REMOVAL

(1) Remove the governor retaining ring with its end which is not through the governor body first. Use care not to damage the governor body.

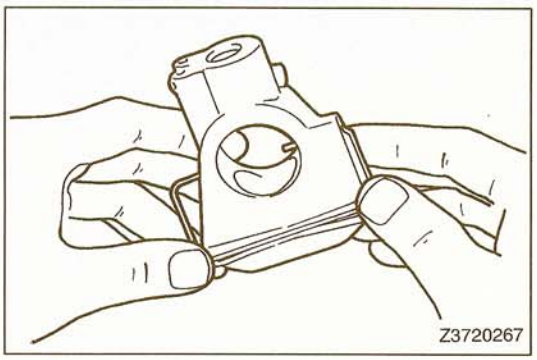


## REASSEMBLY SERVICE POINTS

### ▶A◀ GOVERNOR RETAINING RING INSTALLATION

(1) Fit the end of the governor retaining ring which goes through the governor body first.

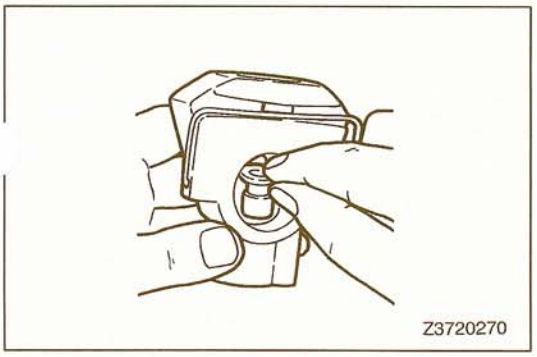


### ▶B◀ GOVERNOR VALVE INSTALLATION

(1) Insert the governor valve into the hole in the output shaft with care not to damage the governor valve.

# VALVE BODY

23301210010

## DISASSEMBLY AND REASSEMBLY

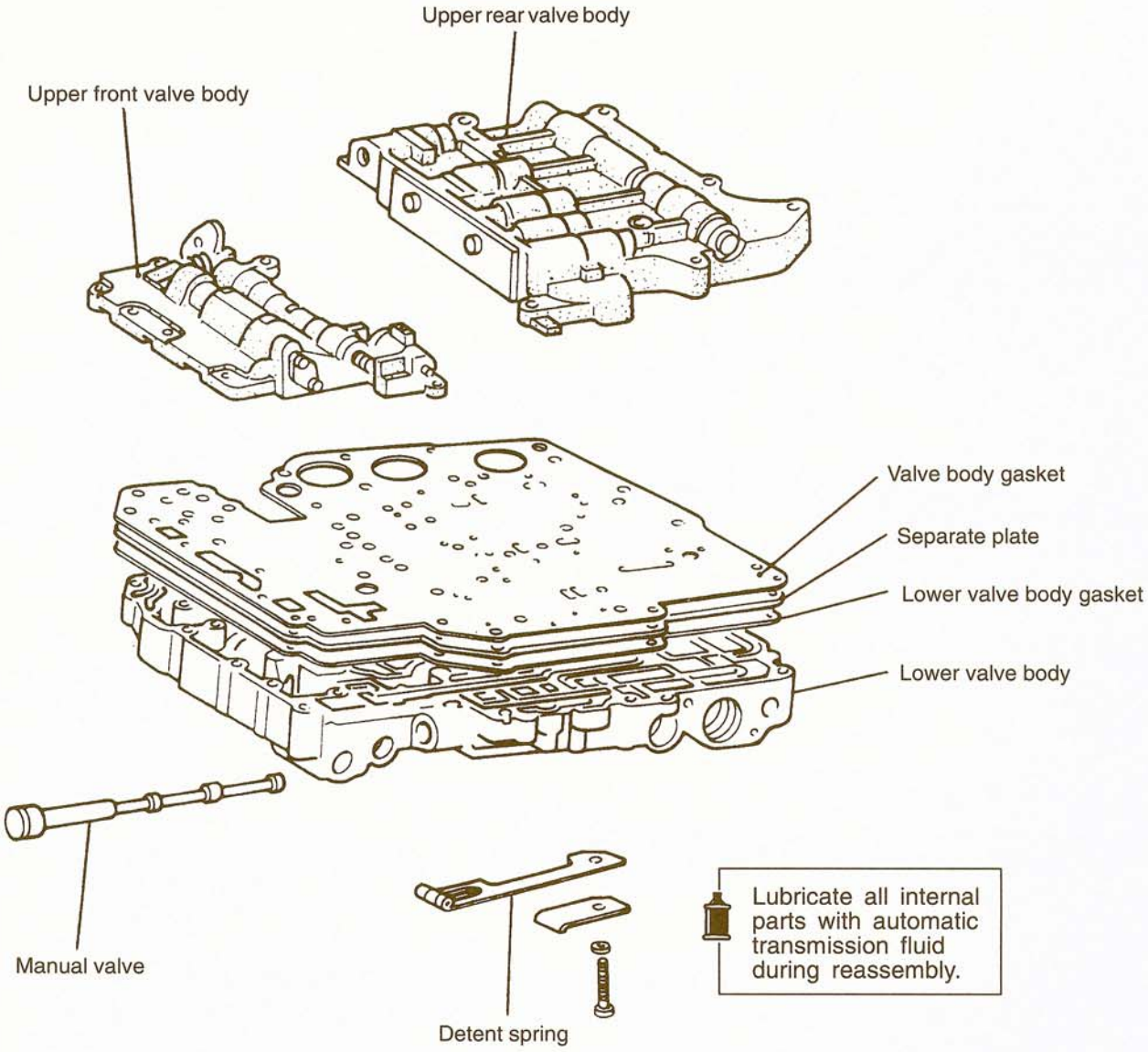


Z3720355

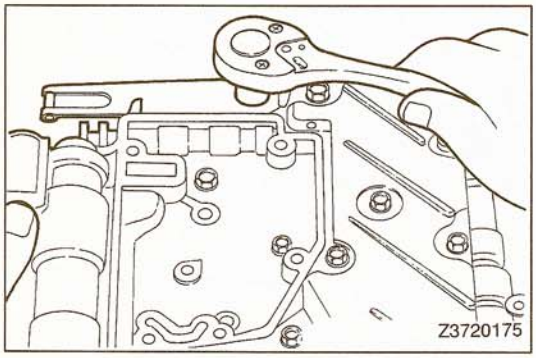


### DISASSEMBLY

(1) Remove the detent spring.
(2) Remove the manual valve.

TSB Revision

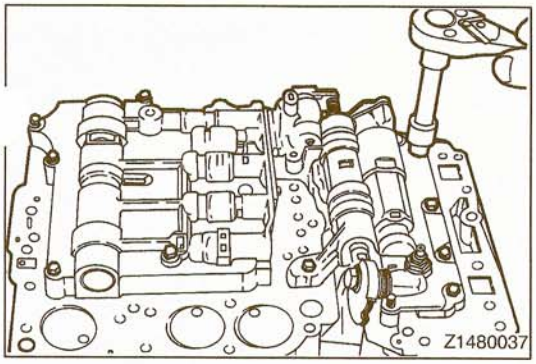


(3) Turn the valve body assembly upside down and remove the 10 bolts from the upper front and upper rear valve bodies.

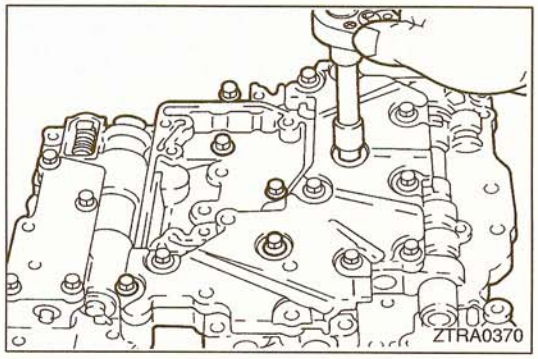


(4) Turn over the assembly and remove the set bolts from the lower valve body.

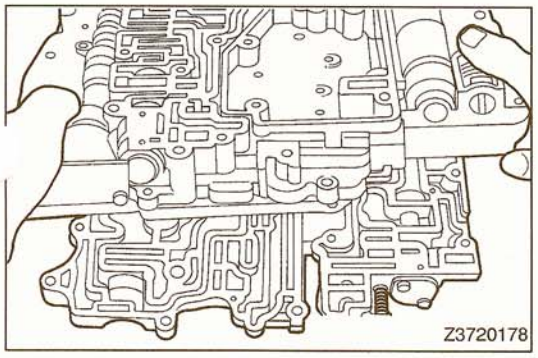


(5) Remove the lower valve body and plate by lifting them up together.

**Caution**
**Use care not to drop the check valve and ball.**

## REASSEMBLY

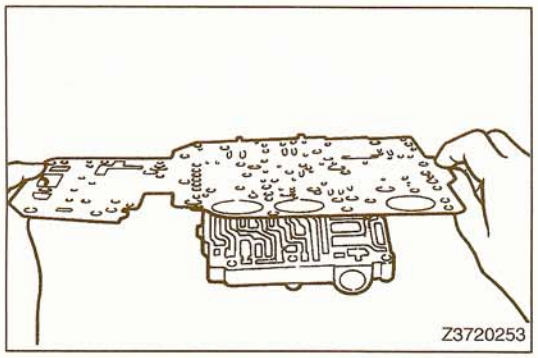


(1) Put a new gasket on the upper rear valve body. Before installations, make sure that the new gasket matches with the old gasket. Align the gasket with the lower right-hand corner.

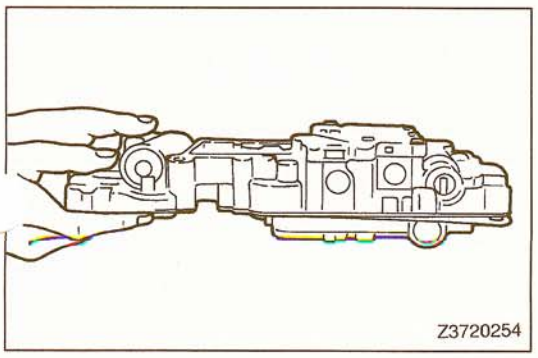


(2) Place the lower valve body with plate on the upper rear valve body with the R.H. side corners in alignment.

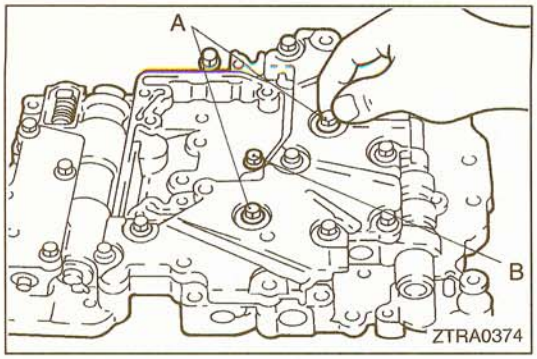


(3) Use three bolts to loosely tighten the upper rear valve body to the lower valve body.

NOTE
The length of each bolt is as shown below.

| | |
|---|---|
| A | 52 mm (2.05 in.) |
| B | 28 mm (1.10 in.) |

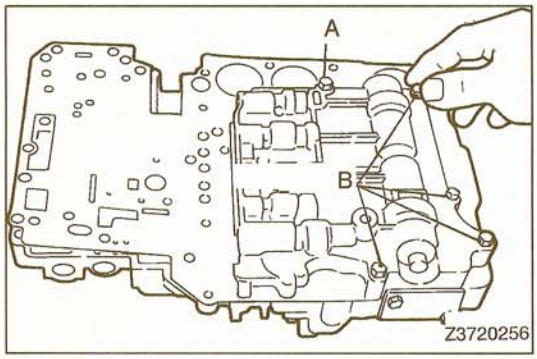


(4) Turn the valve body assembly upside down, check the gasket for alignment and then tighten the five bolts in the upper rear valve body.

NOTE
The length of each bolt is as shown below.

| | |
|---|---|
| A | 35 mm (1.38 in.) |
| B | 28 mm (1.10 in.) |

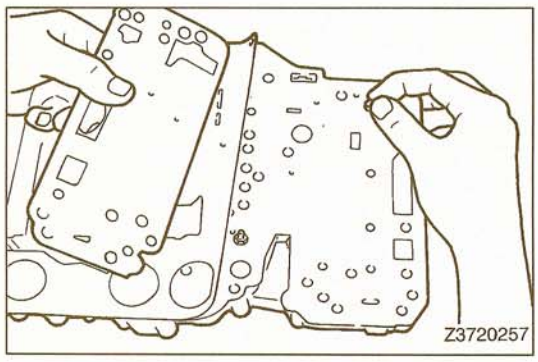


(5) Remove the loosely tightened bolt from the plate.

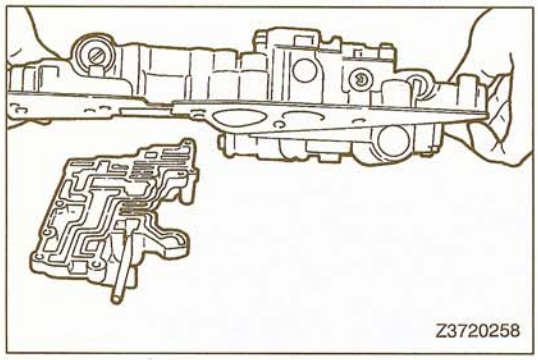


(6) Put the lower and upper rear valve body assemblies on the upper front valve body.

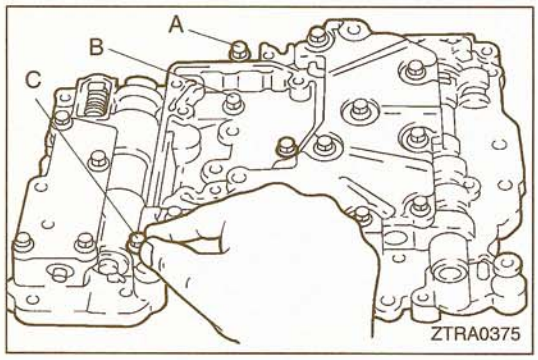


(7) Tighten the lower valve body set bolts by hand to secure the upper front valve body.

NOTE
The length of each bolt is as shown below.

| | |
|---|---|
| A | 22 mm (.87 in.) |
| B | 28 mm (1.10 in.) |
| C | 52 mm (2.05 in.) |

**TSB Revision**

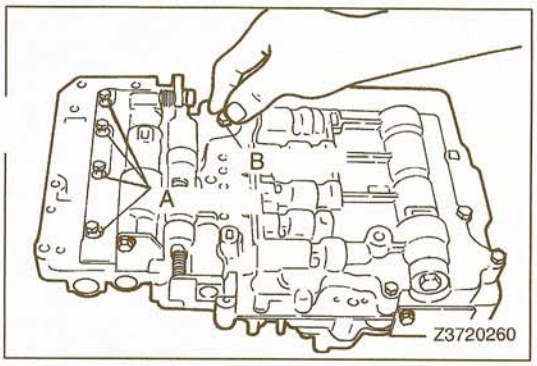


(8) Turn the valve body assembly upside down and tighten the five bolts in the upper front valve body by hand.

NOTE
The length of each bolt is as shown below.

| | |
|---|---|
| A | 18 mm (.71 in.) |
| B | 22 mm (.87 in.) |

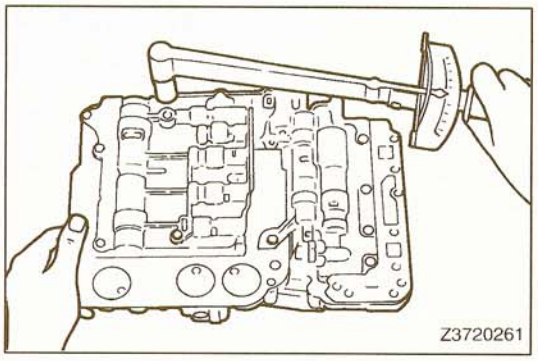


(9) Make sure again that the gaskets are in alignment. Tighten the upper front valve body and upper rear valve body bolts to specified torque.

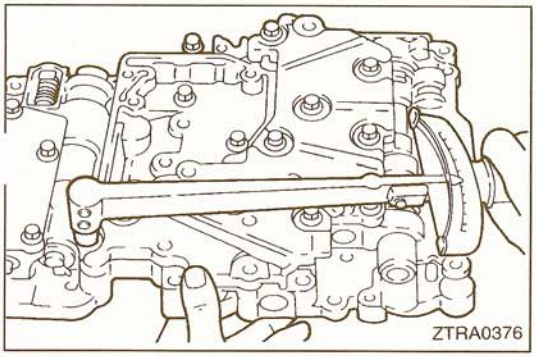


(10) Turn over the assembly and tighten the lower valve body bolts to specified torque.

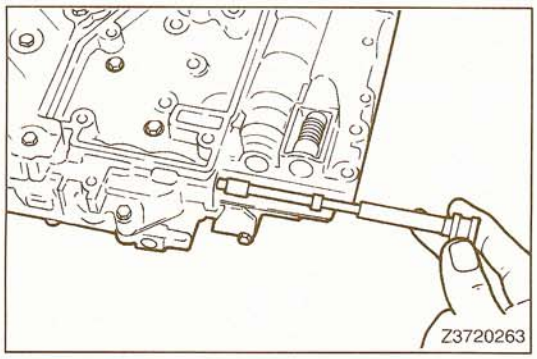


(11) Insert the manual valve in the valve body.

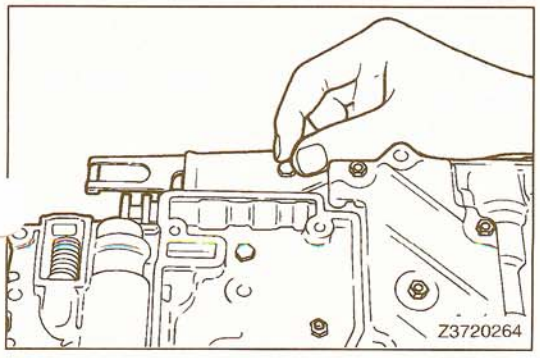


(12) Install the detent spring and tighten the bolts to specified torque.

# LOWER VALVE BODY

23301240019

## DISASSEMBLY AND REASSEMBLY

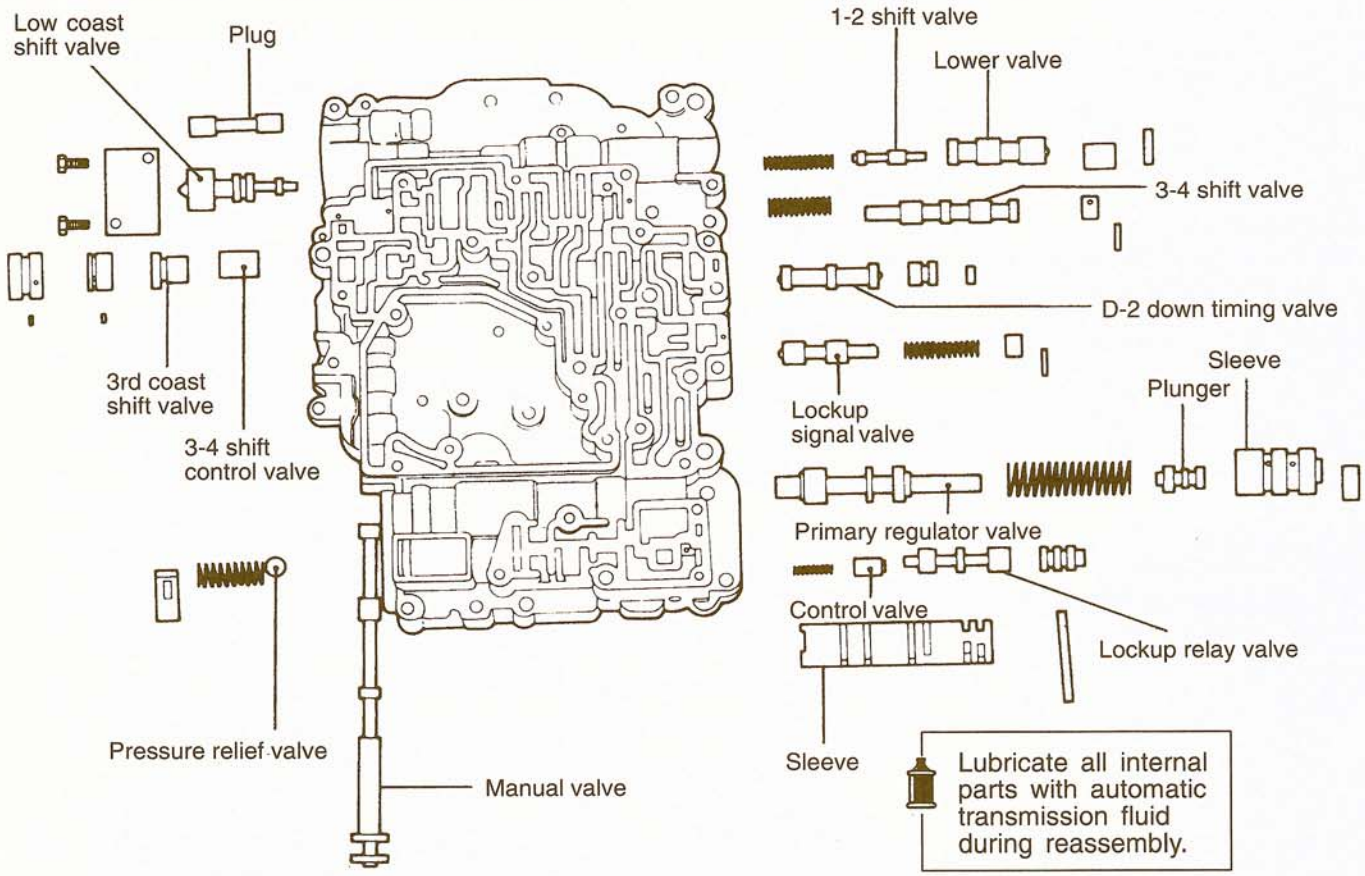


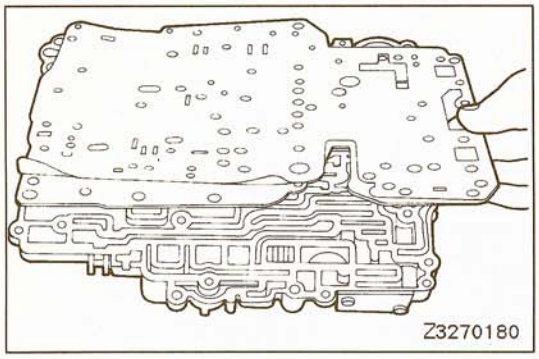


### DISASSEMBLY

(1) Remove the lower valve body plate and gaskets.

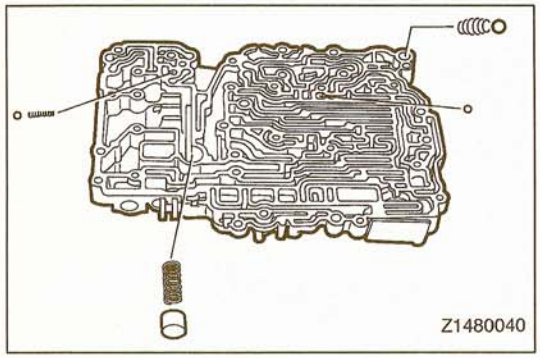


(2) Remove the check balls, damping check ball, spring, oil cooler return ball, spring, oil cooler bypass valve and spring.

**TSB Revision**

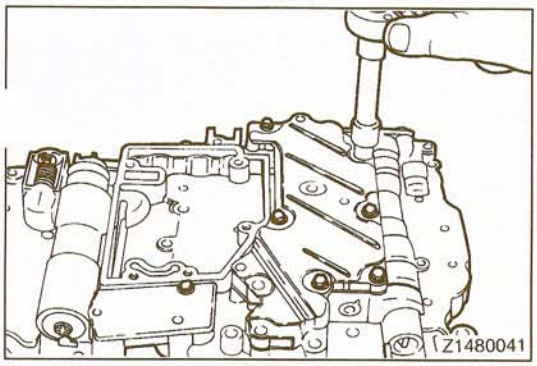


(3) Turn assembly over, remove the set bolt and remove the lower body cover, plate and gaskets.

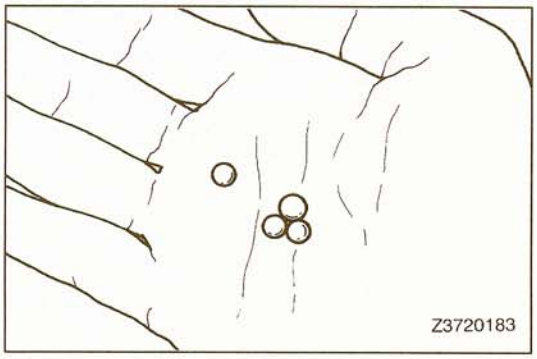


(4) Remove the four check balls, being careful not to scratch the grooves. Keep the balls together to prevent losing them.

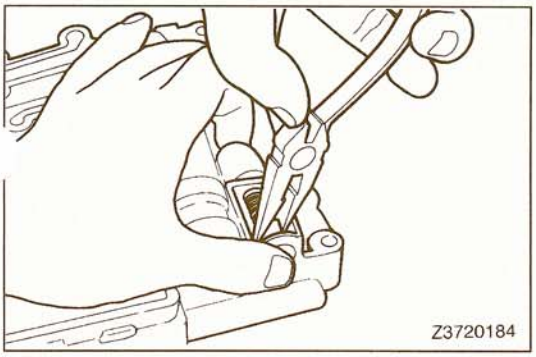


(5) Remove the retainer from the pressure relief valve assembly.

**Caution**
**Cover the spring by hand. Then, with needlenose pliers, slowly pull out the spring seat, being careful not to bend the spring.**

(6) Remove the pressure relief spring and ball.

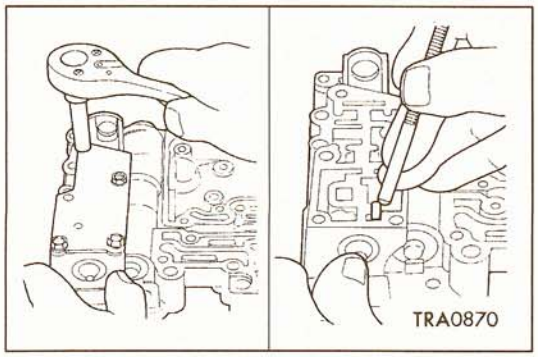


(7) Remove the plate and gasket.
(8) Remove the lock-up relay valve:
  (a) Remove the plug retainer and plug.

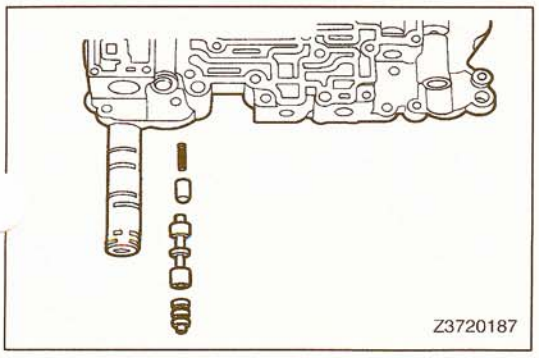


  (b) Remove the sleeve with the lock-up relay valve, control valve and spring in it.

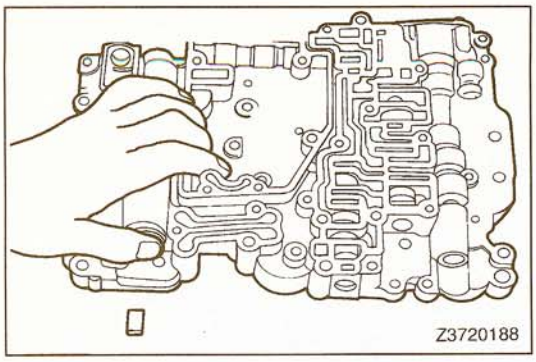


(9) Remove the valve retainer from the primary regulator valve.

**Caution**
**Highly compressed spring inside – keep away fro face.**

To remove the retainer, hold it with valve body side face down, and press in on the valve sleeve. Retainer will drop out. Slowly relieve spring compression.

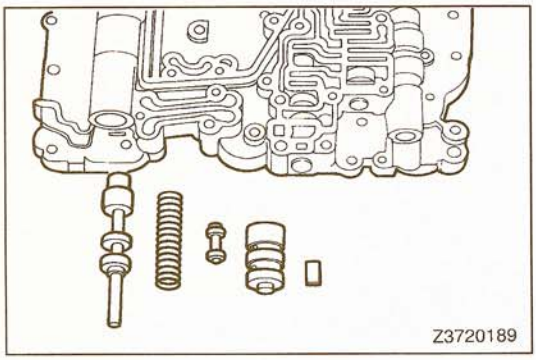


(10) Remove the sleeve, plunger, spring and primary regulator valve.

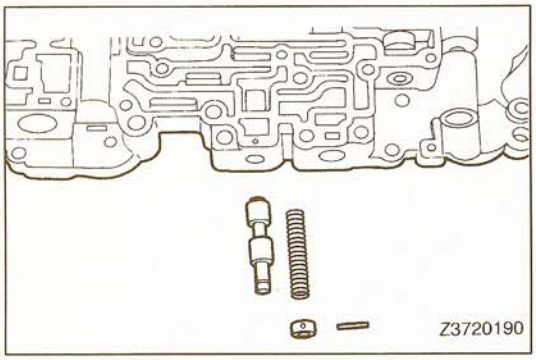


(11) Remove the locating pin for lock-up signal valve.
(12) Remove the plug, spring and lock-up signal valve.

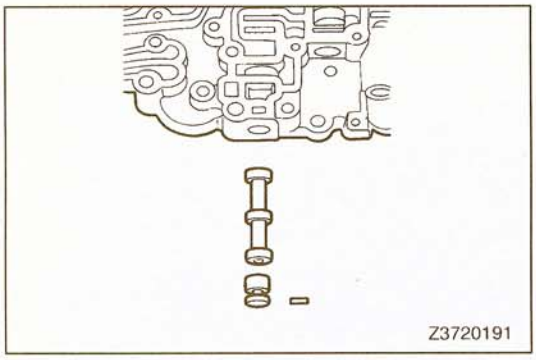


(13) Remove the valve retainer for D-2 down timing valve.
(14) Remove the plug and D-2 down timing valve.

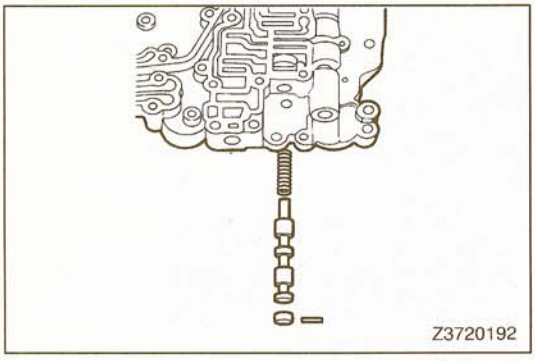


(15) Remove the locating pin for 3-4 shift valve.
(16) Remove the plug, 3-4 shift valve and spring.

**TSB Revision**

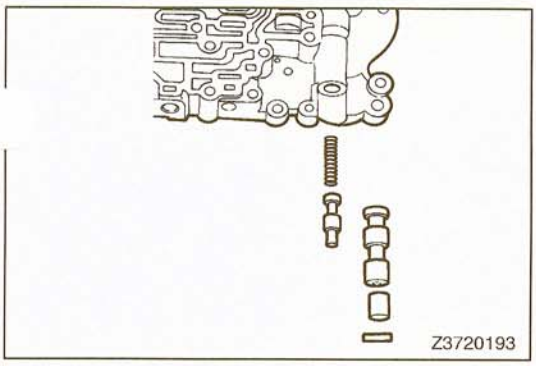


(17)Remove the valve retainer for 1-2 shift valve.
(18)Remove the plug, 1-2 shift valve and spring.

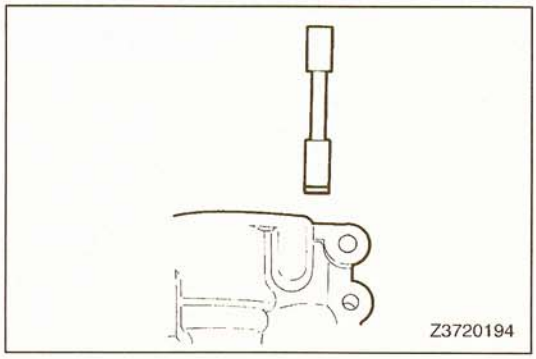


(19)Remove the cover plate.
(20)Remove the plug.

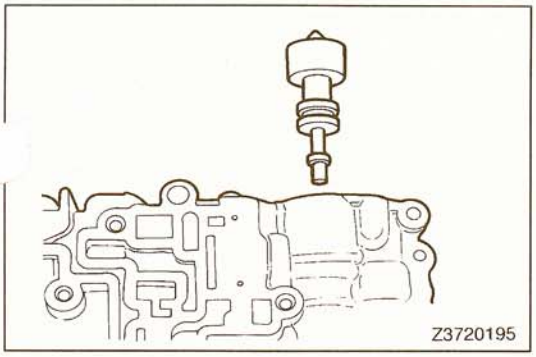


(21)Remove the low-coast shift valve.

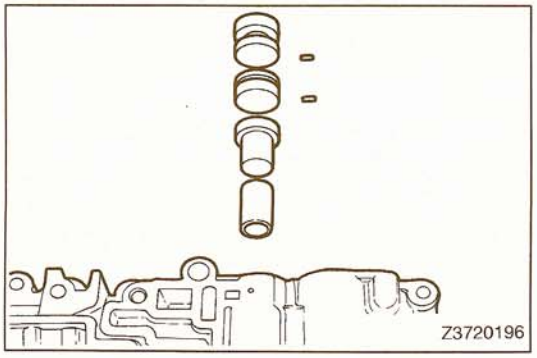


(22)Remove the locating pins for 3rd-coast shift valve.
(23)Remove the 3rd-coast shift valve and 3-4 shift control valve.

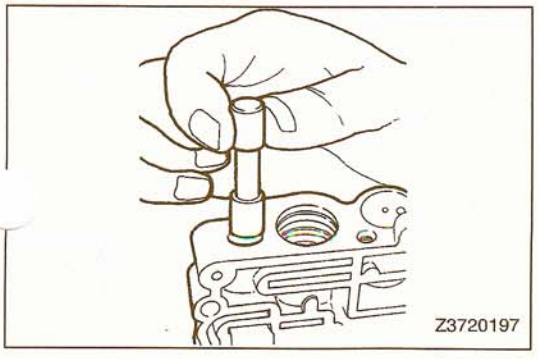


## REASSEMBLY

(1) Install the plug.

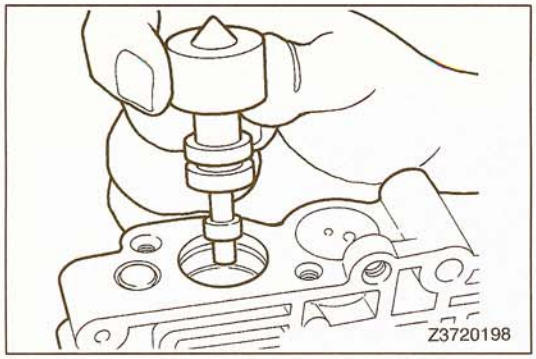


(2) Install the low-coast shift valve carefully, inserting the smaller end first.

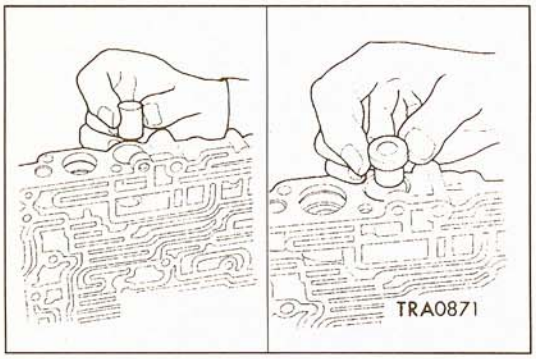


(3) Install the 3-4 shift control valve and 3rd-coast shift valve:
  (a) Insert the 3-4 coast shift valve with the cup side first.
  (b) Insert the 3rd-coast valve with the smaller end first.

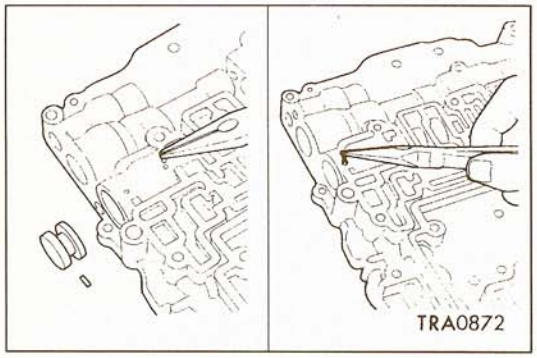


(4) Install the two plugs and locating pins:
  (a) Insert the 3rd-coast shift valve inside plug with the thicker face end first.
  (b) Using needle-nose pliers, insert the locating pin.
  (c) Insert the outside plug, and then the locating pin.

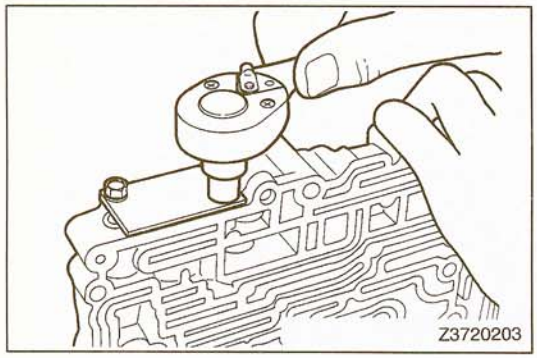


(5) Install the low-coast shift valve cover.

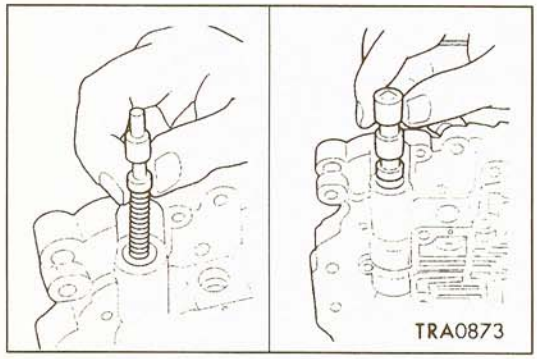


(6) Set the valve body on edge and carefully insert the spring, 1-2 shift upper valve, lower valve and plug.
(7) Install the 1-2 shift valve retainer.

TSB Revision

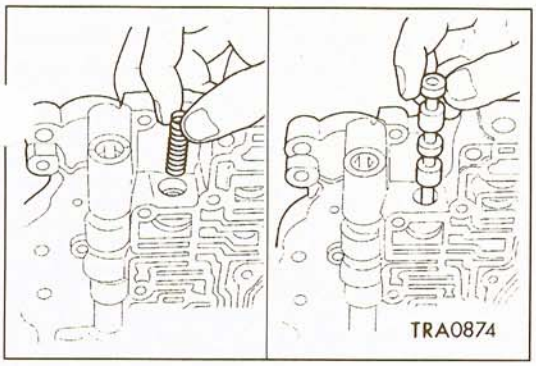


(8) Set the valve body on edge and carefully insert the spring, 3-4 shift valve (small end first) and plug.
(9) Install the locating pin of 3-4 shift valve.

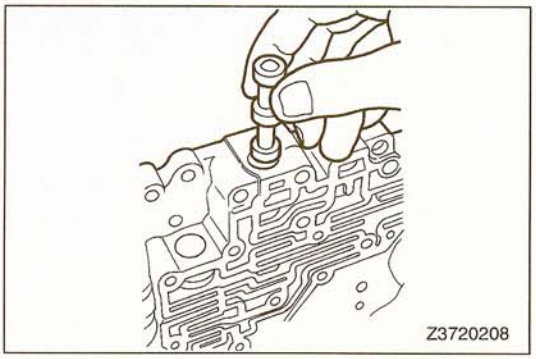


(10) Insert the D-2 down timing valve with the smaller end first and then the plug with the larger end first.
(11) Install the D-2 down timing valve retainer.

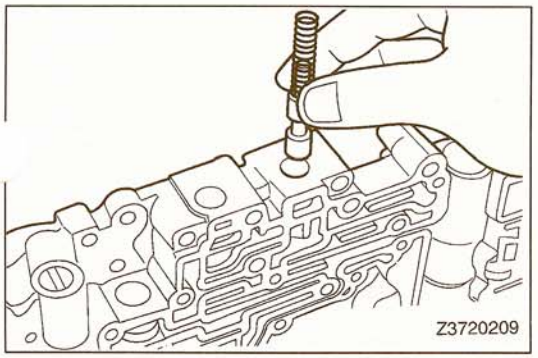


(12) Install the lockup signal valve (with its big end down), spring and plug (with its small end down).
(13) Install the lockup signal valve locating pin.

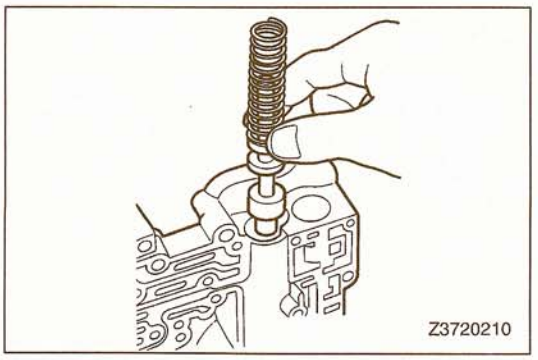


(14) Insert the primary regulator valve and spring into the valve body.

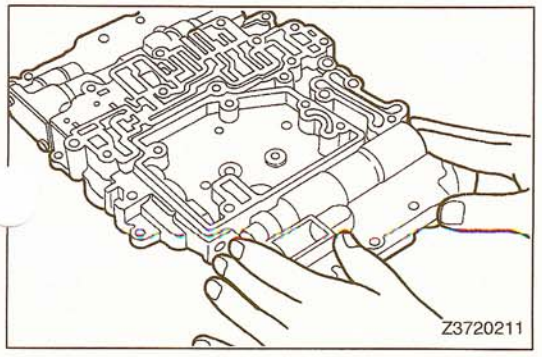


(15) Make sure that the valve is properly located.

NOTE
Be sure to see that the primary regulator valve surface is flush with the valve body surface.

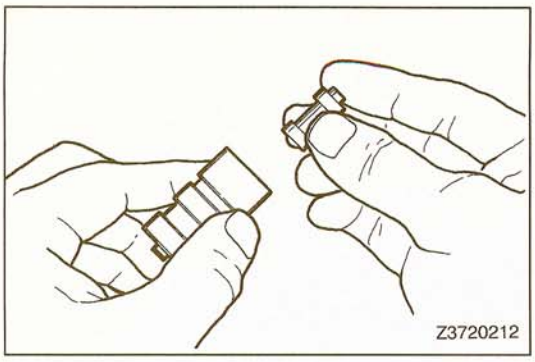


(16) Insert the primary regulator valve plunger in the sleeve. Be sure to insert the rounded end first and make sure that the plunger is fully inserted until it is drawn into the sleeve.
(17) Insert the sleeve together with the plunger.
(18) Install the valve retainer.

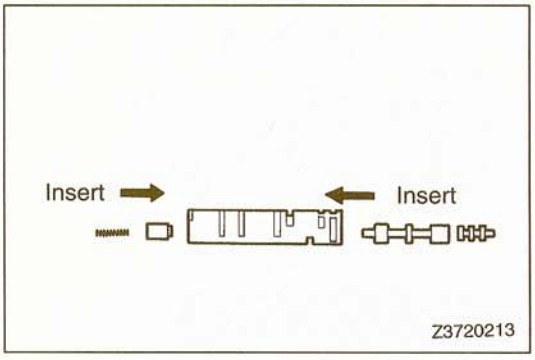


(19) Install the lock-up relay valve:
  (a) Assemble the spring, lock-up relay control valve, lock-up relay valve and valve into the sleeve.

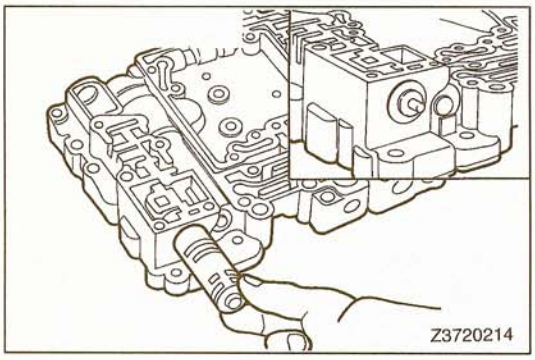


  (b) Insert the sleeve in the hole.

NOTE
Be sure to insert the sleeve with its smaller void up as shown in the illustration.

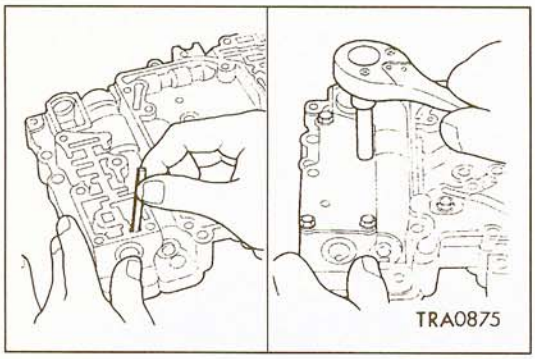


  (c) Install the plug retainer.
(20) Install the plate together with the gasket and tighten the four bolts.

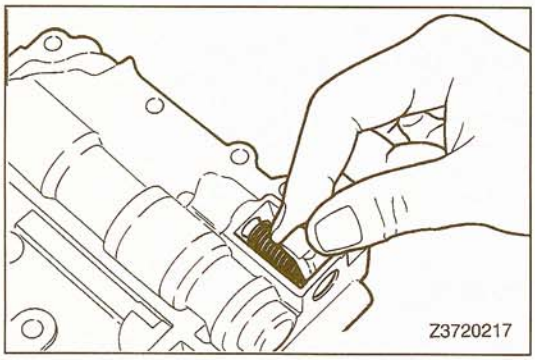


(21) Install the pressure relief valve, spring and retainer.

**TSB Revision**

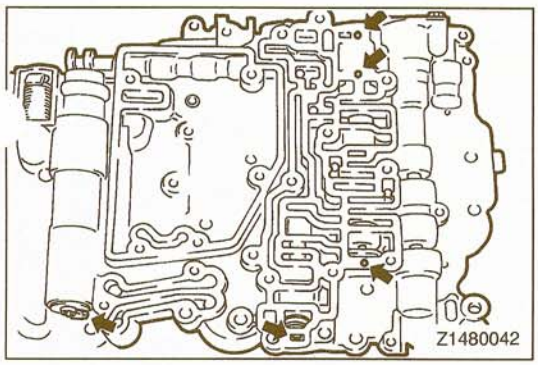


(22)Check the retainer and locating pin to make sure that the retainer and pin are properly installed.

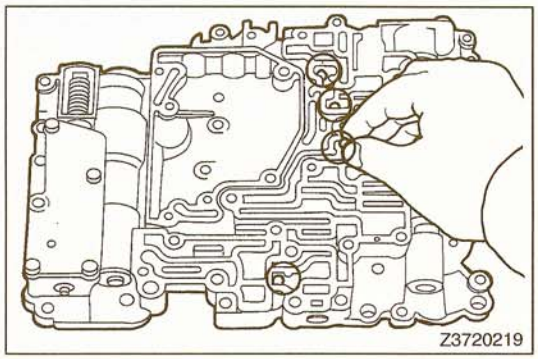


(23)Install the four check balls.

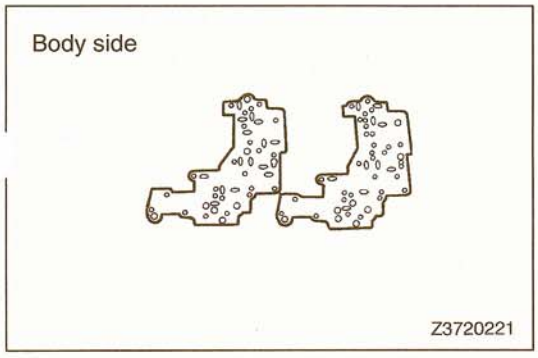


(24)Install the lower valve body cover by the following sequence.

Gasket (upper) → plate → gasket (lower) → cover

NOTE
The upper gasket is not interchangeable with the lower gasket.

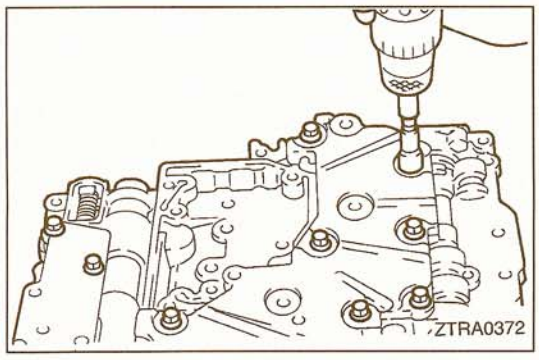


(25)Install the lower body cover set bolts.

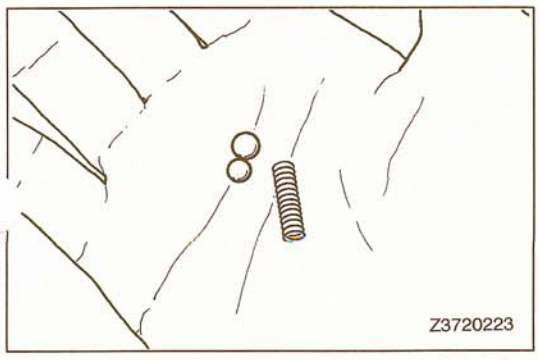


(26)Identify the check balls and springs.
Note that the two rubber check balls differ in size. A larger ball is installed on the damping side of the spring.

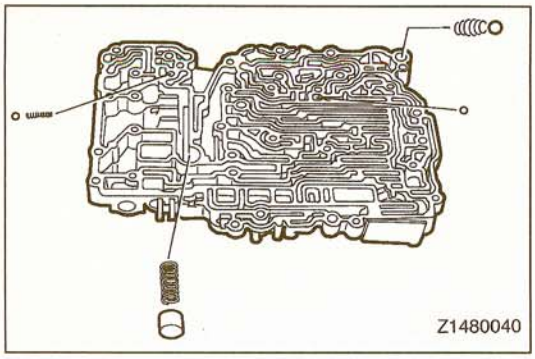


(27) Install the check ball, damping check ball, spring, oil cooler return ball, spring, oil cooler bypass valve and spring.

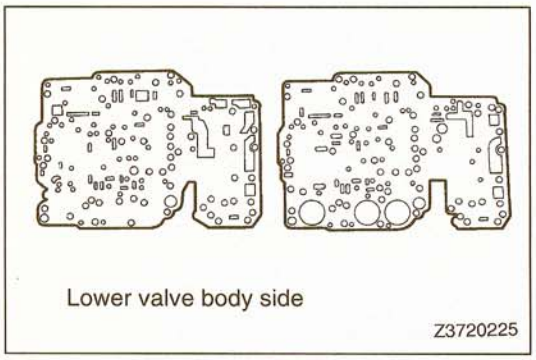


(28) Install the valve body gaskets.
The two gaskets are not interchangeable with each other.

**Caution**
**When replacing the gasket, make sure that a new gasket matches with the old gasket.**

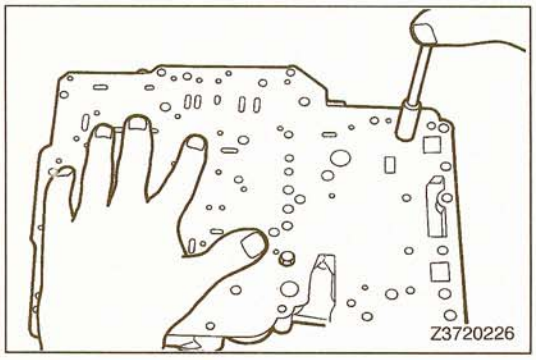


(29) Install the separator plate.
Set the plate in the specified location.
Finger tighten the two oil strainer mounting bolts so that the check valve floated by spring force may be held by the plate.

## INSPECTION

23301250012

### VALVE SPRING

Check the spring for damage, rust and permanent set. Measure the free length of the spring. If it is below the standard value, replace the spring. (Refer to Spring Identification Table.)

# UPPER FRONT VALVE BODY

23301270018

## DISASSEMBLY AND REASSEMBLY

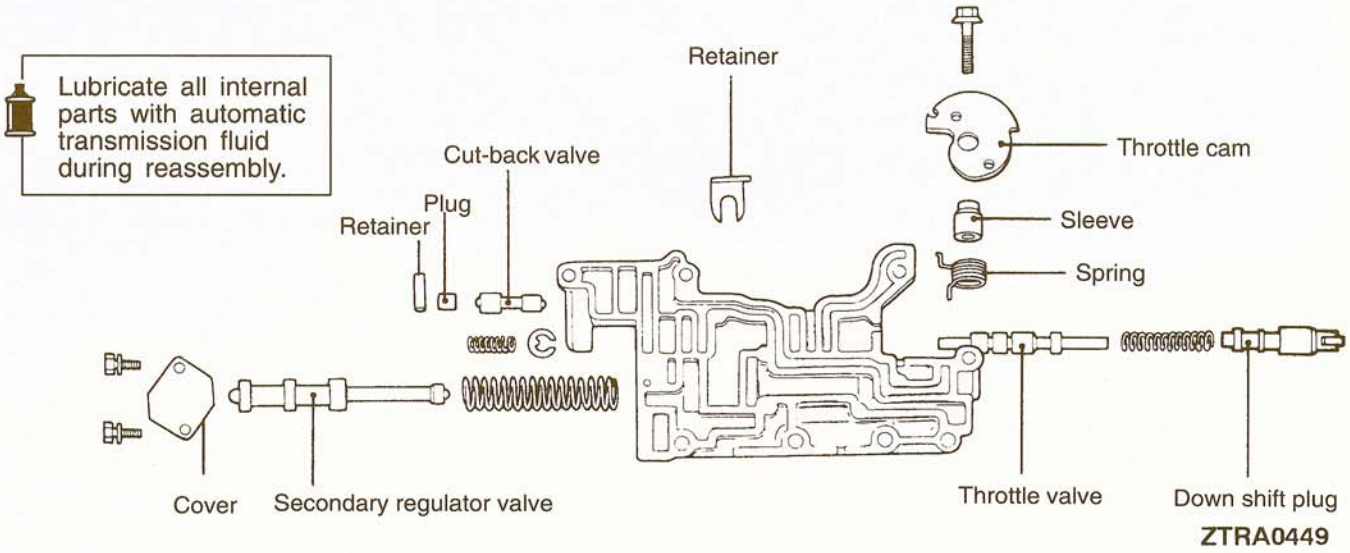


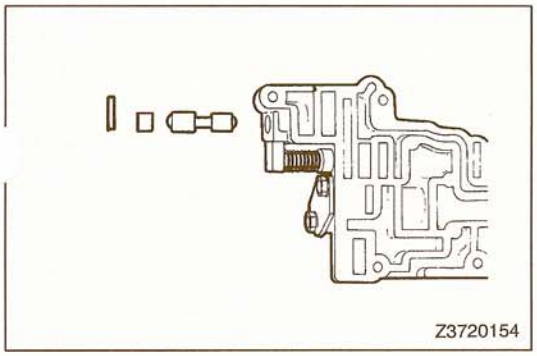


### DISASSEMBLY

(1) Remove the retainer, plug and cut-back valve.

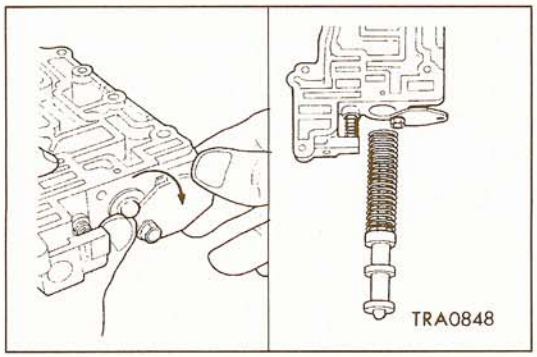


(2) Remove the secondary regulator valve and spring as follows:

(a) Remove one cover mounting bolt and loose the other bolt slightly. Rotate the cover slowly until the valve is visible, and hold with a finger.

**Caution**
**As the spring has a strong force, be sure to prevent the valve from jumping out.**

(b) Remove the valve and spring.
(c) Remove the bolt and cover.

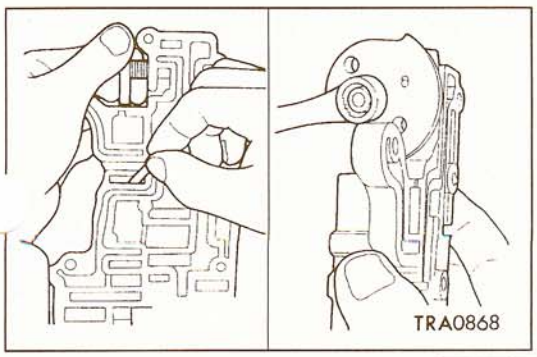


(3) Rotate the throttle cam, press-fit the downshift plug into the valve body, insert the cutback valve plug retainer in the illustrated position and hold the throttle valve.
(4) Remove the throttle cam spring.

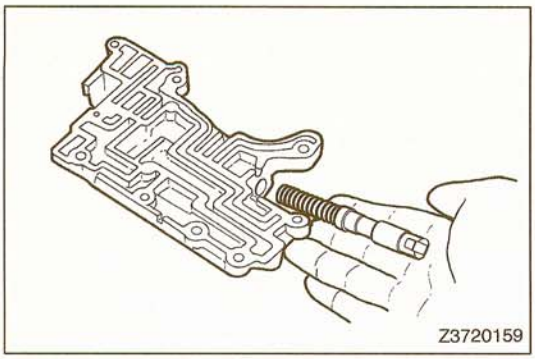


(5) Pull out the retainer inserted in (3) above and remove the downshift plug and spring.

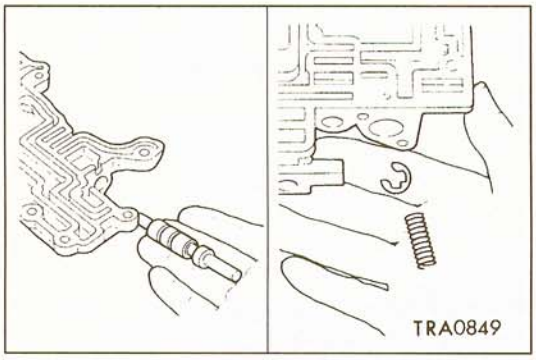


(6) Pull out the throttle valve retainer and remove the throttle valve and spring.

## REASSEMBLY

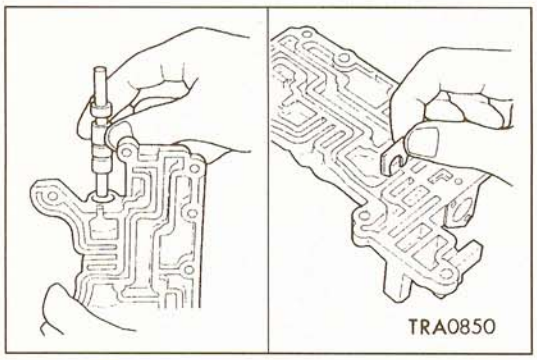


(1) Insert the throttle valve fully in the hole made in the valve body.
(2) Coat the throttle valve retainer with petrolatum and insert it in the illustrated position.

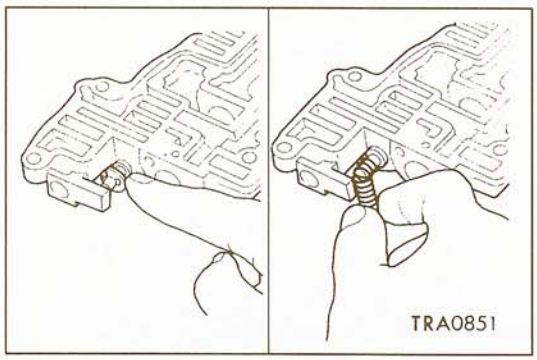


(3) Install the spring to the end of the throttle valve.

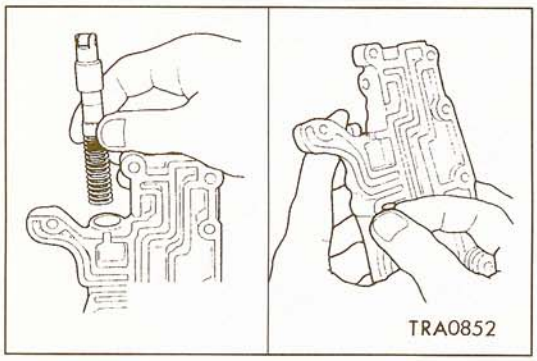


(4) Install the spring and downshift plug.
(5) Press-fit the downshift plug and insert the cutback valve plug retainer in the illustrated location.

TSB Revision

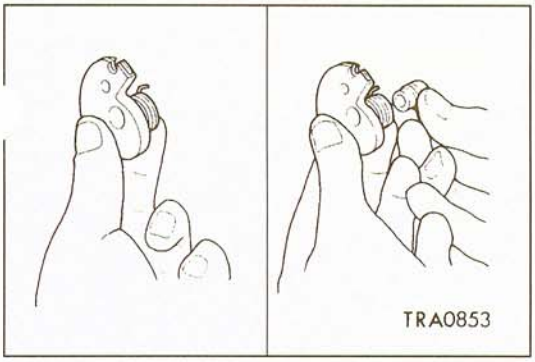


(6) Install the spring with its end hooked in the hole in the cam.
(7) Insert the sleeve.

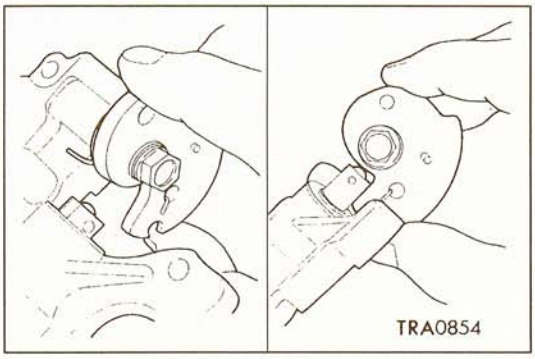


(8) Install the throttle cam to the valve body. Make sure that the spring end is properly hooked.
(9) Remove the valve plug retainer inserted in (5) above.

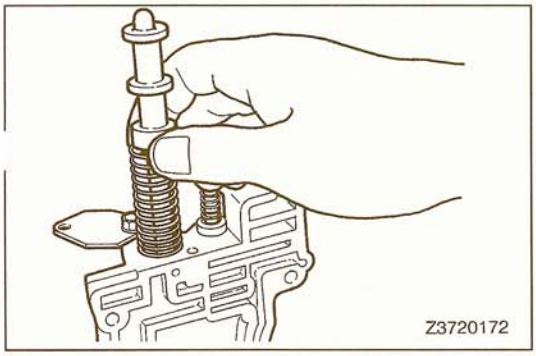


(10) Install the secondary regulator valve as follows:
  (a) Use one bolt to install the cover.
  (b) Install the spring and secondary regulator valve.
  (c) Press-fit the valve and rotate the cover to close.
  (d) Install the other bolt and tighten to specified torque.

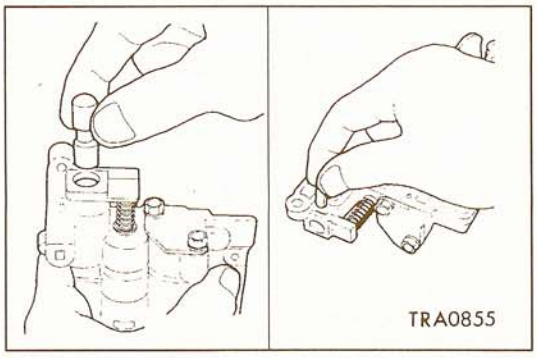


(11) Insert the cutback valve and plug.
(12) Coat the retainer with petrolatum and insert it in the illustrated location.

## INSPECTION

2330128001

(1) Check the valve spring for damage, rust and permanent set. Measure the free length of the spring. If it is below the standard value, replace the spring. (Refer to Spring Identification Table.)

# UPPER REAR VALVE BODY

23301300014

## DISASSEMBLY AND REASSEMBLY

Lubricate all internal parts with automatic transmission fluid during reassembly.

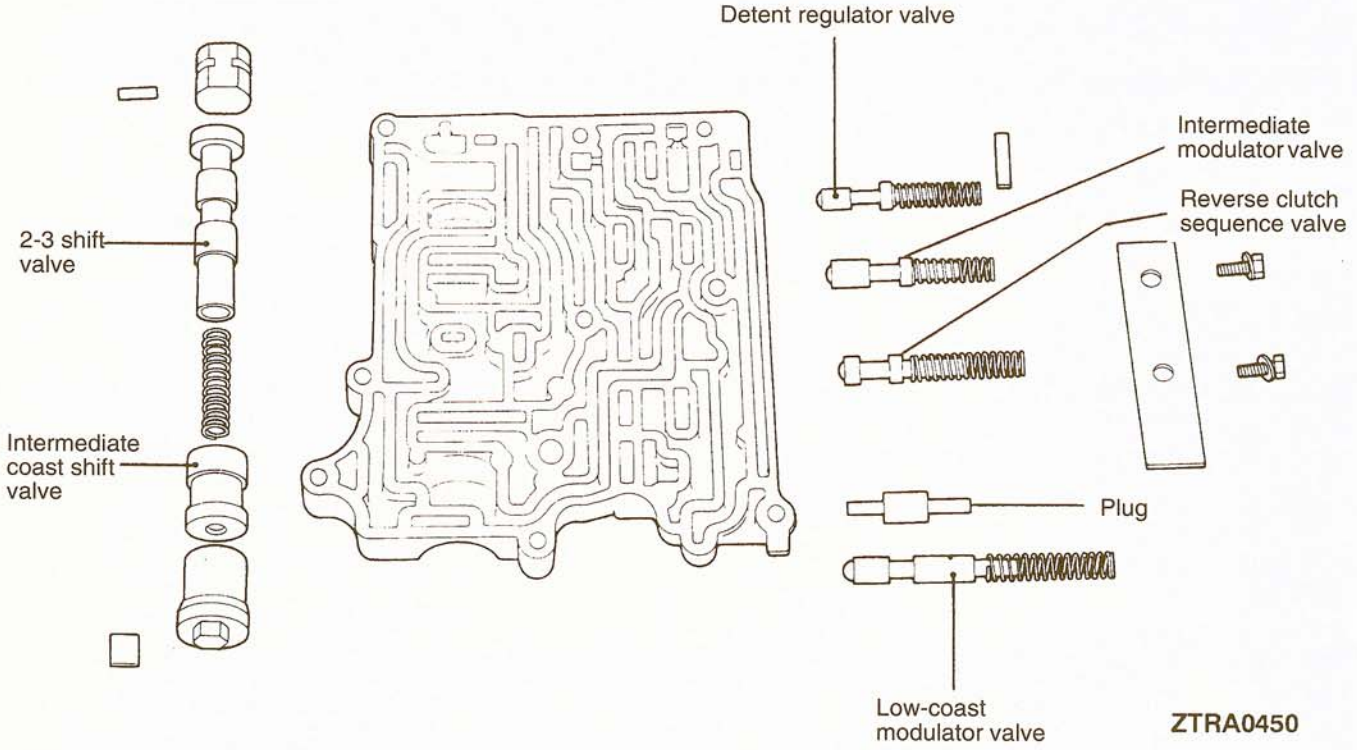


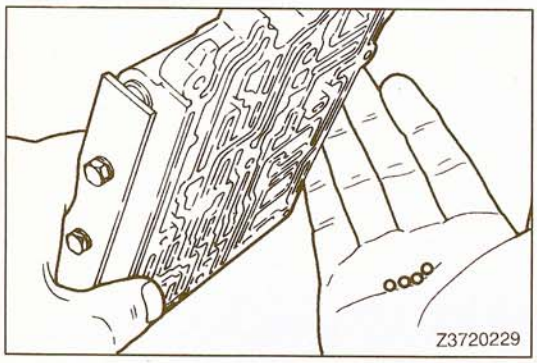


### DISASSEMBLY

(1) Use tweezers to remove the check balls (three rubber balls and one steel ball).

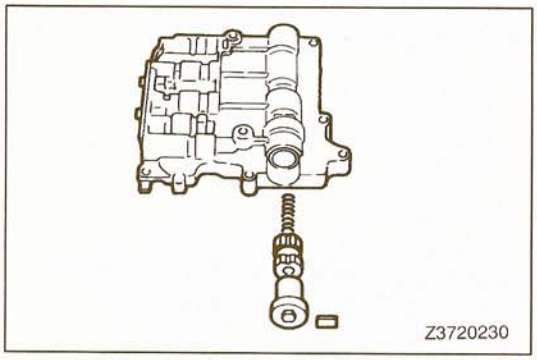


(2) Remove the valve retainer from the intermediate-coast shift valve.
(3) Remove the plug, intermediate-coast shift valve and spring.

TSB Revision

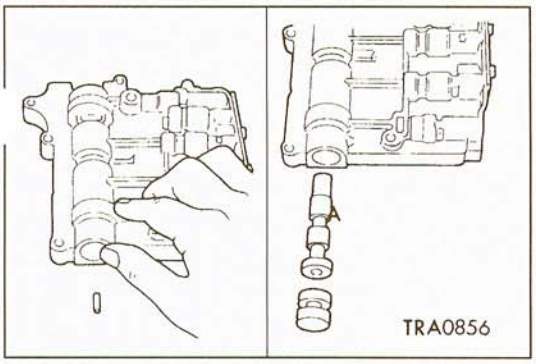


(4) Remove the 2-3 shift valve as follows:
  (a) Remove the valve retainer from the 2-3 shift valve.
  (b) Remove the plug and 2-3 shift valve.

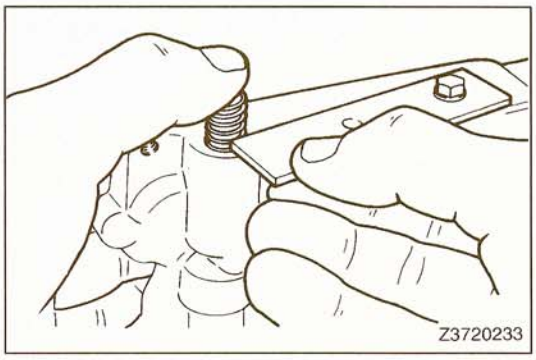


(5) Of the two bolts, remove the one which is installed on the low-coast modulator valve side, from the rear valve cover.
(6) Slide the cover slightly to remove the low-coast modulator valve only.

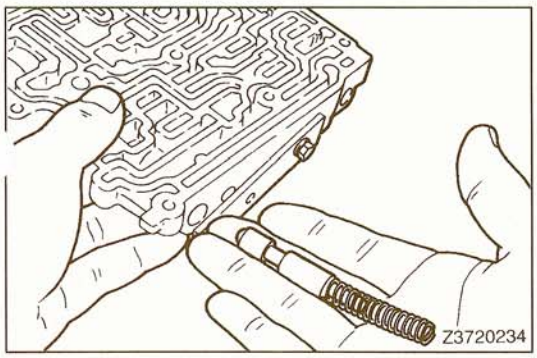


(7) Remove the spring and low-coast modulator valve.

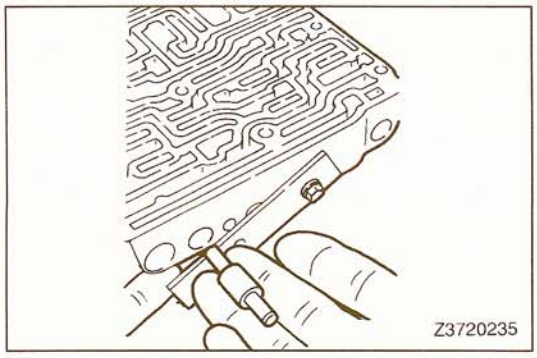


(8) Slide the cover further to remove the plug.

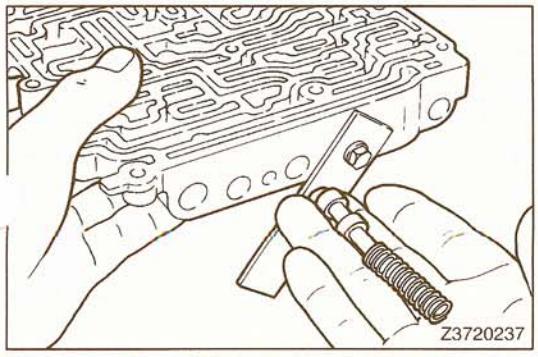


(9) Rotate the cover still further to remove the spring and reverse clutch sequence valve.

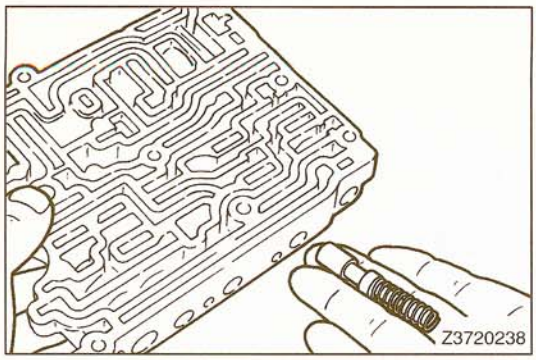


(10) Remove the rear cover, spring and intermediate modulator valve.

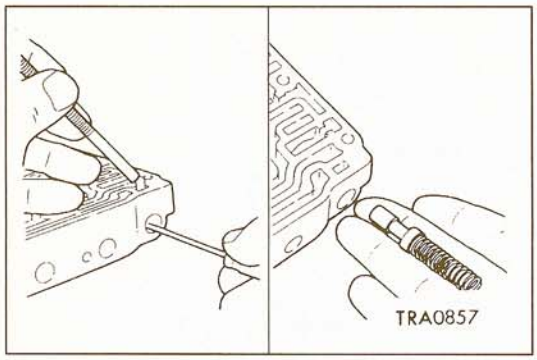


(11) Remove the valve retainer from the detent regulator valve.
(12) Remove the spring and detent regulator valve.

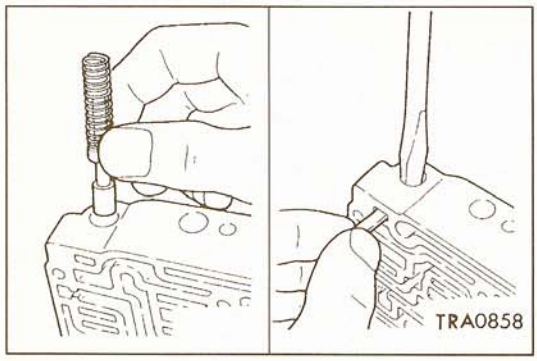


## REASSEMBLY

(1) Install the detent regulator valve, spring and retainer as follows:
Insert the valve (with its rounded end down) and spring in the hole. Fit the large screwdriver on the spring end. Then compress the spring to install the retainer in the specified location.

NOTE
Make sure that the retainer is installed over the entire end of the spring.

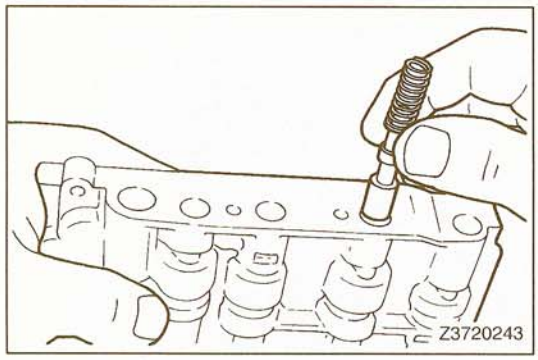


(2) Insert the intermediate modulator valve and spring. Be sure to insert the valve with its rounded end down.

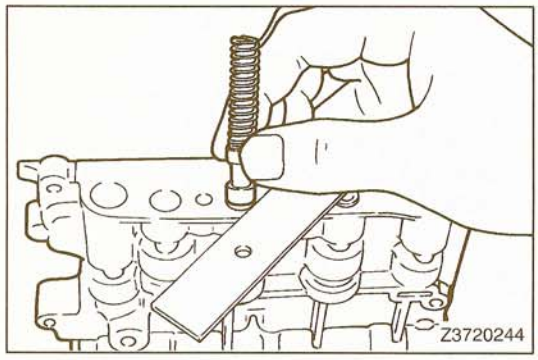


(3) Put the rear valve cover in place and loosely tighten the bolt on the intermediate modulator valve side.
(4) Insert the reverse clutch sequence valve and spring. Be sure to insert the valve with its rounded end down.

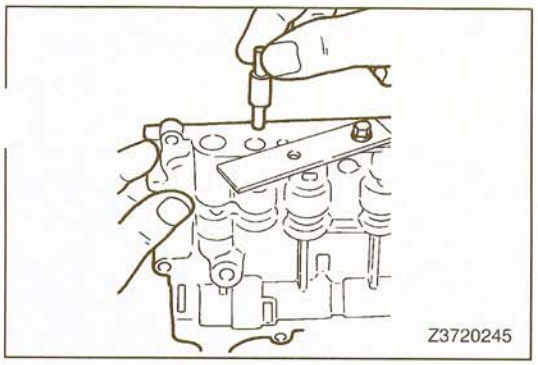


(5) Insert the plug.

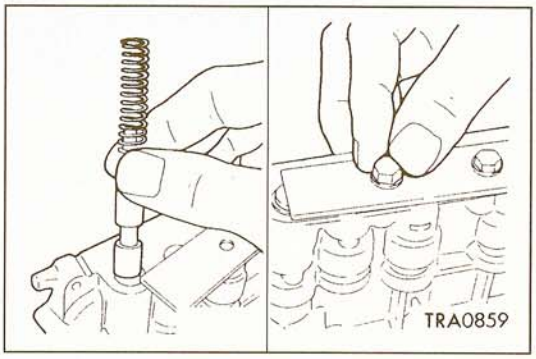


(6) Insert the low-coast modulator valve and spring. Be sure to insert the valve with its rounded end down.
(7) Install the other rear valve cover bolt and tighten both bolts.

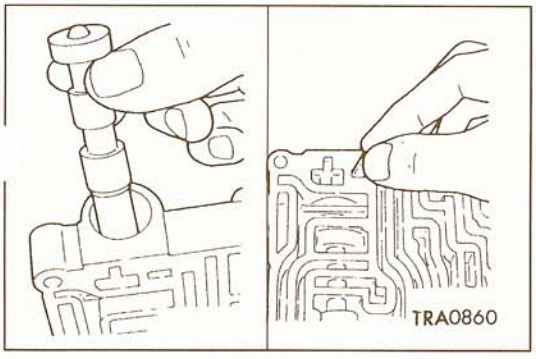


(8) Insert the 2-3 shift valve as follows:
  (a) Insert the 2-3 shift valve with its small end down. Then, insert the plug.

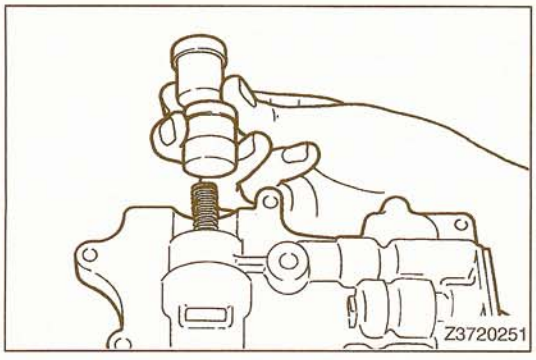


(9) Insert the spring and intermediate-coast shift valve in the hole. Be sure to install the valve with its rounded end down.
(10) Insert the valve and retainer.

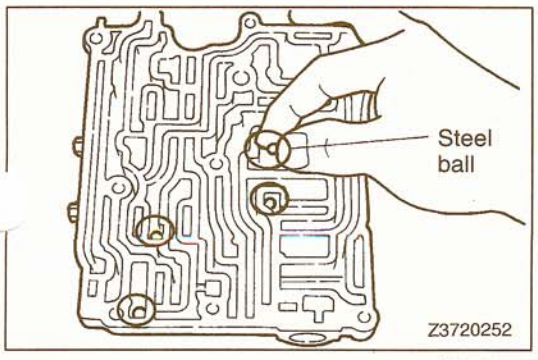


(11) Install the steel ball in the location shown in the illustration. The three rubber balls are identical and may be installed in any location.

## INSPECTION

23301310017

(1) Check the valve spring for damage, rust and permanent set. Measure the free length of the spring. If it is belo the standard value, replace the spring. (Refer to Sprir Identification Table.)

# TRANSFER

23301330020

## DISASSEMBLY AND REASSEMBLY

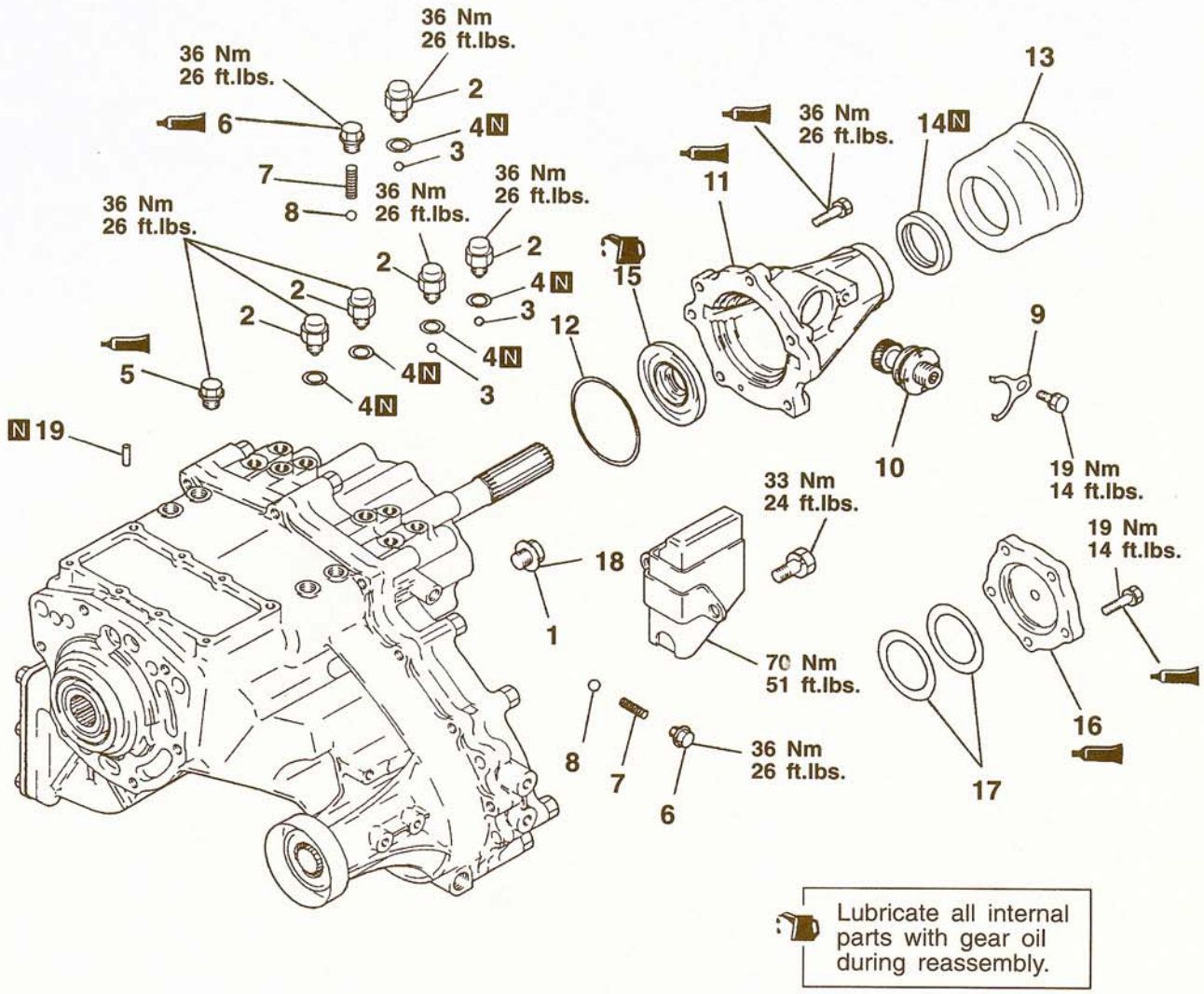


ATRA0914

**Disassembly steps**

1. Dynamic damper
▶S◀ 2. Detecting switch
3. Steel ball
4. Gasket
▶R◀ 5. Plug
▶Q◀ 6. Poppet plug
7. Poppet spring
8. Steel ball
9. Sleeve damp
▶P◀ 10. Speedometer gear
▶O◀ 11. Rear cover
▶O◀ 12. Spacer
13. Dust seal guard
▶N◀ 14. Oil seal
▶M◀ 15. Oil seal
▶L◀ 16. Cover
▶L◀ 17. Wave spring (Spacer)
18. H-L shift rail plug
▶K◀ 19. Spring pin (H-L shift fork)

TSB Revision

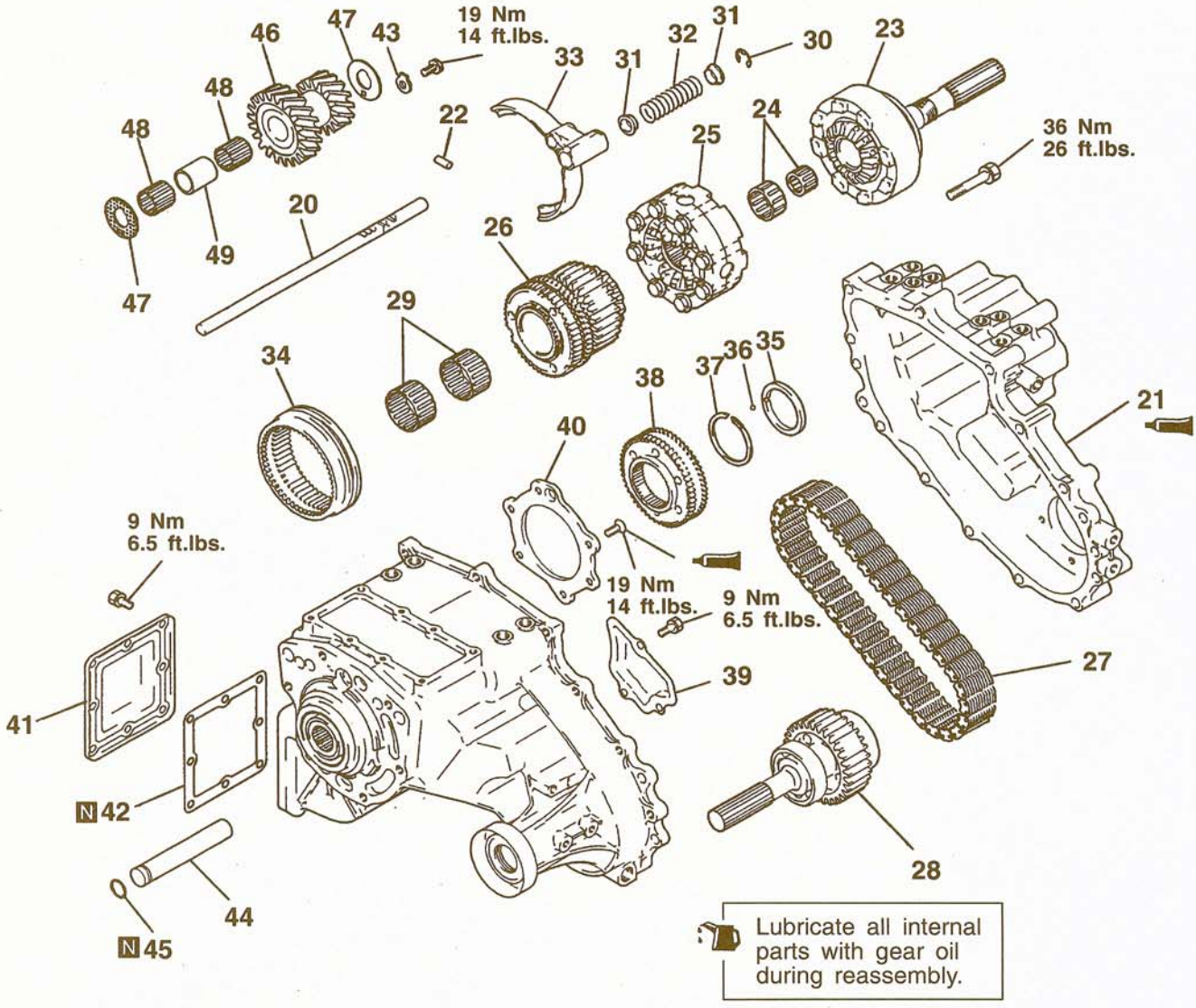


**Disassembly steps**

- ◀A▶ ▶K◀ 20. H-L shift rail
- ◀A▶ ▶J◀ 21. Chain cover
- ▶J◀ 22. Interlock plunger
- 23. Rear output shaft
- 24. Needle bearing
- 25. Center differential case
- ◀B▶ ▶I◀ 26. 2-4WD synchronizer
- ◀B▶ ▶I◀ 27. Chain
- ◀B▶ ▶I◀ 28. Front output shaft
- 29. Needle bearing
- 30. Snap ring (2-4WD shift rail)
- 31. Spring seat
- 32. Spring
- 33. 2-4WD shift fork
- 34. 2-4WD synchronizer sleeve
- 35. Sleeve
- 36. Steel ball
- ▶H◀ 37. Snap ring
- 38. Differential lock hub
- 39. Oil dam cover
- ▶G◀ 40. Bearing retainer
- 41. Side cover
- 42. Side cover gasket
- 43. Lock plate
- ◀C▶ ▶F◀ 44. Counter gear shaft
- 45. O-ring
- 46. Counter gear
- ▶E◀ 47. Thrust washer
- 48. Needle bearing
- 49. Bearing spacer

**TSB Revision**

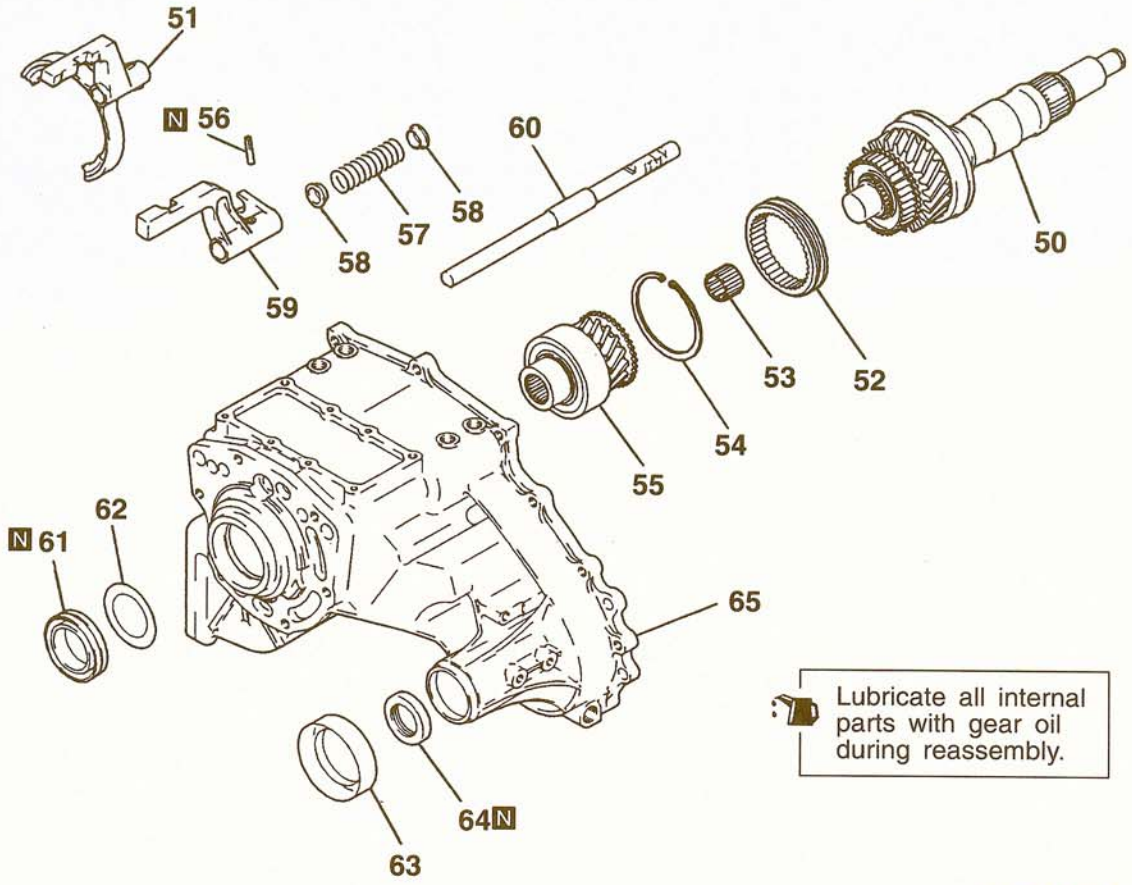


ATRA0916

**Disassembly steps**

50. Drive shaft
51. H-L shift fork
52. H-L clutch sleeve
53. Needle bearing
▶D◀ 54. Snap ring
55. Input gear
▶C◀ 56. Spring pin (2-4WD shift lug)
▶C◀ 57. Spring
▶C◀ 58. Spring retainer
▶C◀ 59. 2-4WD shift lug
▶C◀ 60. 2-4WD shift rail
▶B◀ 61. Oil seal (Input gear)
62. Baffle plate
63. Dust seal guard
▶A◀ 64. Oil seal (Front output shaft)
65. Transfer case

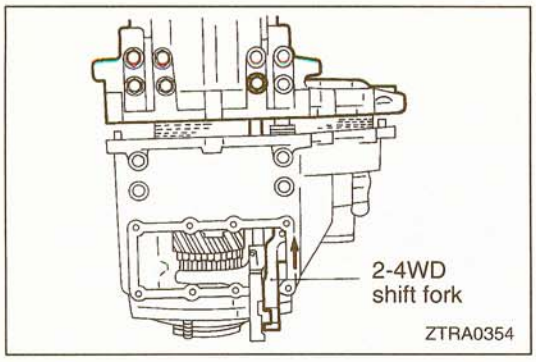


## DISASSEMBLY SERVICE POINTS

### ◀A▶ H-L SHIFT RAIL, CHAIN COVER REMOVAL

(1) Using the poppet spring, secure the H-L shift rail to th High side.
(2) Place the 2-4WD shift rail in the AWD position.

NOTE
Leaving the 2-4WD shift rail in the RWD position will operate the interlock, preventing removal of the chain cover.

(3) Remove the chain cover and remove the H-L shift rail.

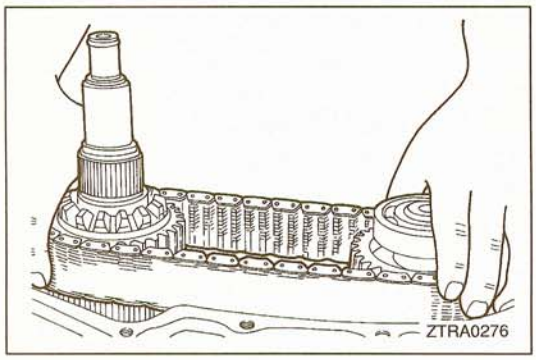


### ◀B▶ 2-4WD SYNCHRONIZER, CHAIN FRONT OUTPUT SHAFT REMOVAL

(1) Remove the 2-4WD synchronizer, front output shaft and chain together.

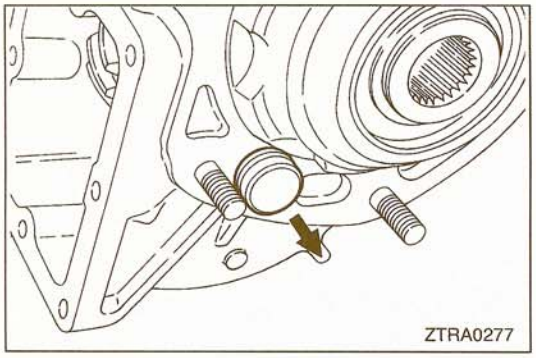


### ◀C▶ COUNTER GEAR SHAFT REMOVAL

(1) Pull out the counter gear shaft toward the transmission case side.

## REASSEMBLY SERVICE POINTS

### ▶A◀ OIL SEAL (FRONT OUTPUT SHAFT) INSTALLATION

(1) Apply transmission oil to the lip of the oil seal before press-fitting.

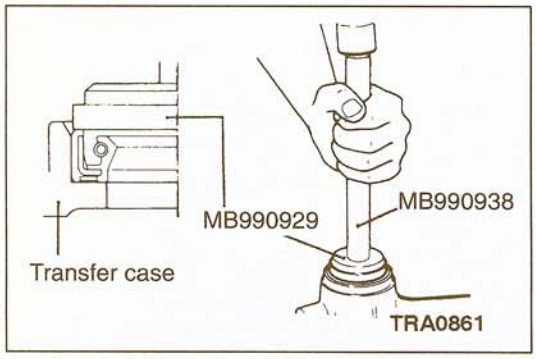


### ▶B◀ OIL SEAL (INPUT GEAR) INSTALLATION

(1) Apply transmission oil to the lip of the oil seal before press-fitting.

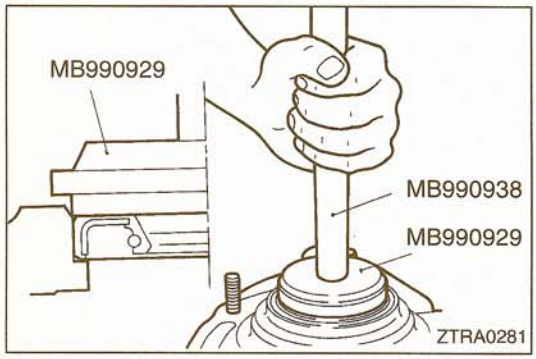


TSB Revision

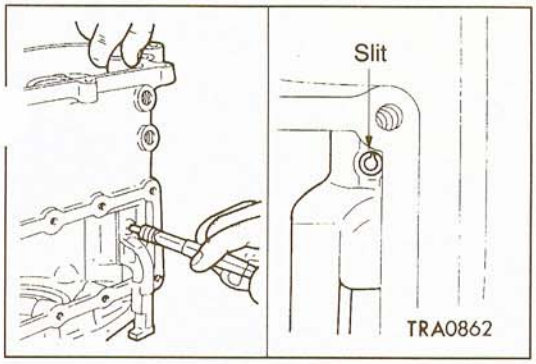


### ▶C◀ 2-4WD SHIFT RAIL, 2-4WD SHIFT LUG, SPRING RETAINER, SPRING, SPRING PIN FOR 2-4WD SHIFT LUG INSTALLATION

(1) Install the spring retainer and spring to the shift rail and set the rail to the shift lug at the inside of the transfer case.
(2) With attention paid to the direction of the shift rail, push the rail to align the spring pin holes in the shift lug and shift rail.
(3) With the rail kept pushed, drive the spring pin so that its slit may face the shift rail center line.

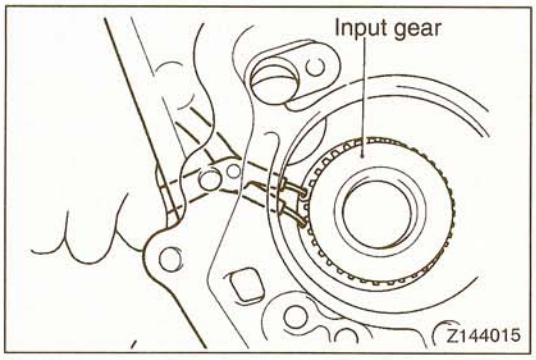


### ▶D◀ SNAP RING INSTALLATION

(1) Select the thickest snap ring that will fit into the groove and install it.

**Standard value: 0–0.06 mm (0–.0024 in.)**

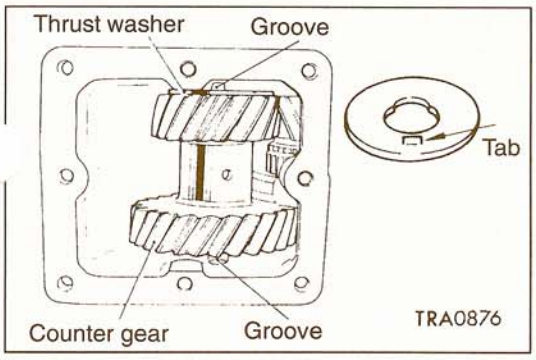


### ▶E◀ THRUST WASHER INSTALLATION

(1) Install the thrust washer with its tab fitted in the groove of the transfer case.

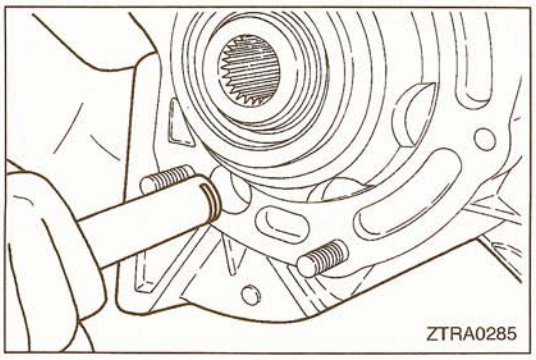


### ▶F◀ COUNTER GEAR SHAFT INSTALLATION

(1) With attention paid to the location of the lock plate groove, insert the transfer counter gear shaft from the transmission case side.

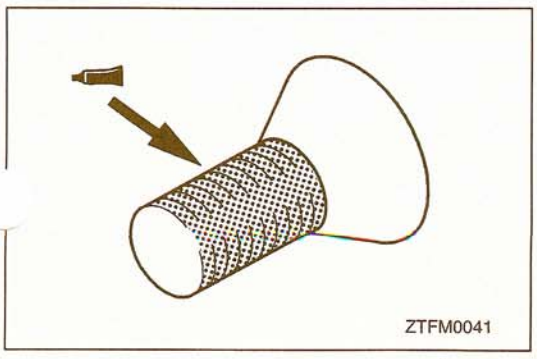


### ▶G◀ BEARING RETAINER INSTALLATION

(1) To reuse the bearing retainer bolts, apply sealant to bolts.

**Specified adhesive:**
**3M STUD Locking No. 4170 or equivalent**

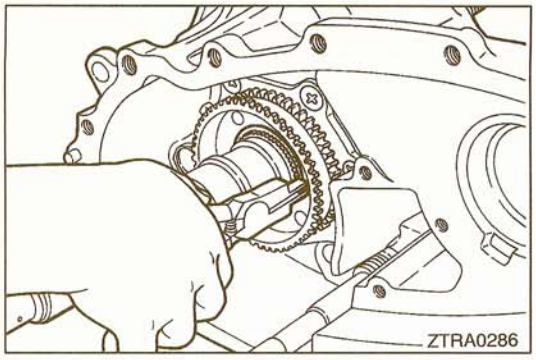


### ▶H◀ SNAP RING INSTALLATION

(1) Select and install the thickest snap ring that will fit in the groove.

**Standard value: 0–0.08 mm (0–.0031 in.)**

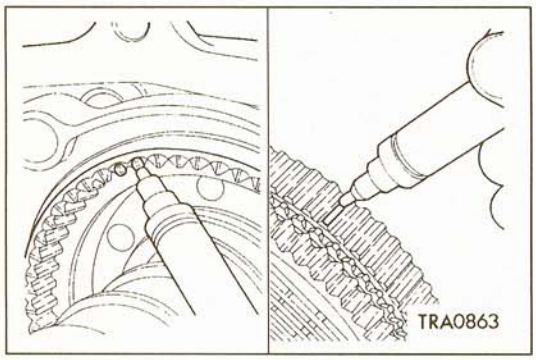


### ▶I◀ 2-4WD SYNCHRONIZER, CHAIN, FRONT OUTPUT SHAFT INSTALLATION

(1) Mark the three deep grooves of the 2-4WD synchronizer with white paint or the like.
(2) Mark the three projections of the 2-4WD synchronizer sleeve spline with white paint or the like.

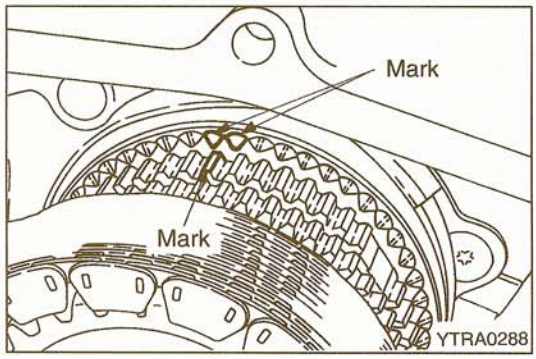


(3) Install the chain exactly to the 2-4WD synchronizer and front output shaft sprockets.
(4) With the two sprockets spaced as apart as possible, install them to the transfer case simultaneously.

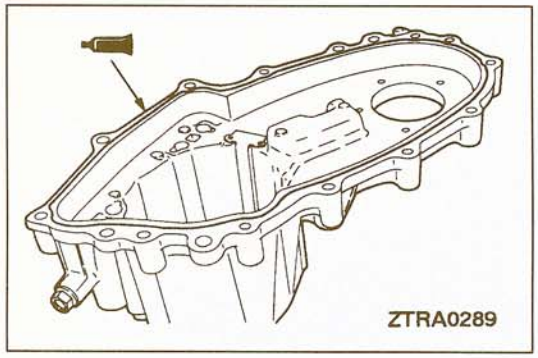


### ▶J◀ CHAIN COVER, INTERLOCK PLUNGER INSTALLATION

(1) Insert the interlock plunger without interfering with the 2-4WD shift rail.
(2) Apply sealant to the chain cover and install the cover.

**Specified sealant:**
**Mitsubishi genuine sealant Part No. 997740 or equivalent**

NOTE
Be sure to press out the sealant uniformly without a break so as not to cause a spill-over after installation.

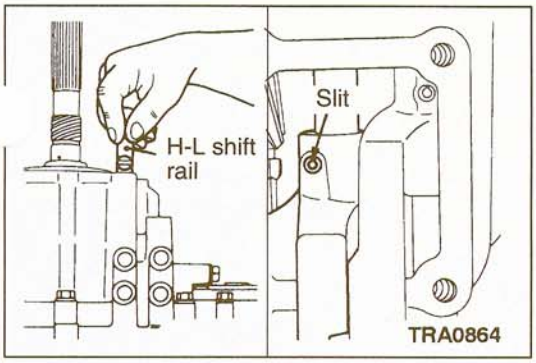


### ▶K◀ H-L SHIFT RAIL, SPRING PIN FOR H-L SHIFT FORK INSTALLATION

(1) With attention paid to its direction, insert the H-L shift rail through the H-L shift rail plug hole.
(2) Align the spring pin hole of the shift rail with that of the shift fork and drive the spring pin with its slit facing the shift rail center line.

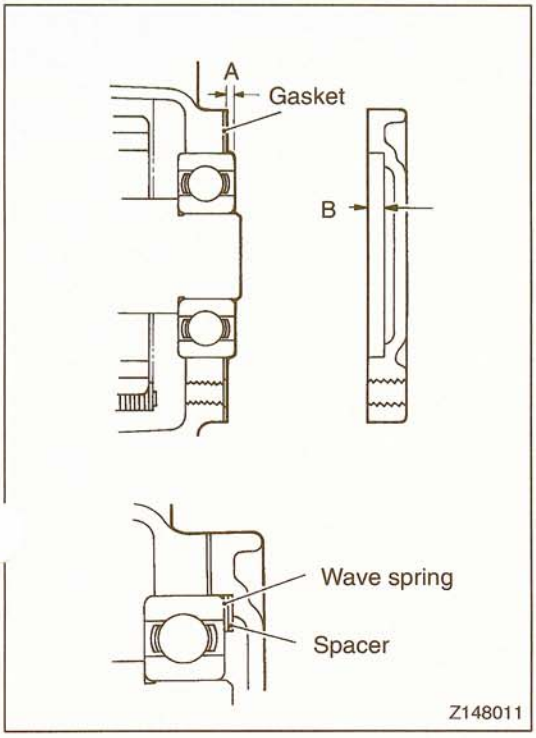


### ▶L◀ COVER, WAVE SPRING (SPACER) INSTALLATION

(1) Measure the front output shaft rear bearing projection (A in the illustration) and cover recess (B in the illustration). If B exceeds A more than 2 mm (.08 in.), insert an additional spacer between the wave spring and the cover. If not, no spacer is required.
(2) Apply sealant to the cover and the mounting bolt thread and install.

**Specified sealant:**
**Cover**
**Mitsubishi genuine sealant Part No. 997740 or equivalent**
**Bolt**
**3M STUD Locking No. 4170 or equivalent**

NOTE
Be sure to press out the sealant uniformly without a break so as not to cause a spill-over after installation.

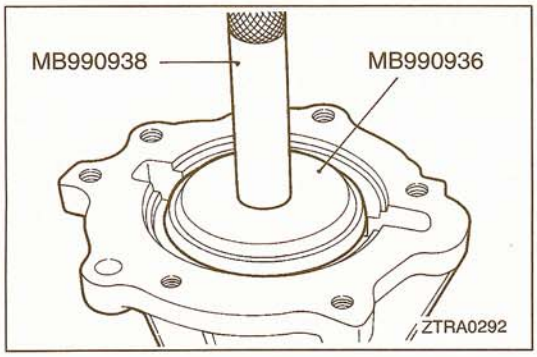


### ▶M◀ OIL SEAL INSTALLATION

(1) Apply transmission oil to the lip of the oil seal before press-fitting.

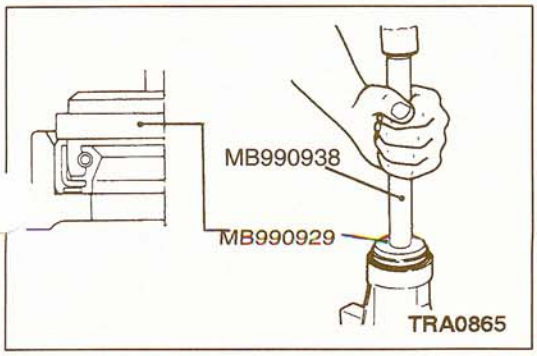


### ▶N◀ OIL SEAL INSTALLATION

(1) Apply transmission oil to the lip of the oil seal before press-fitting.

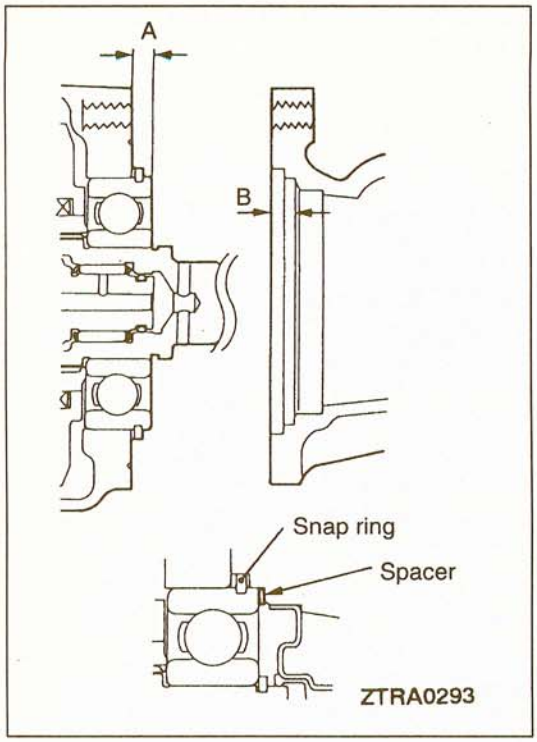


### ▶O◀ SPACER, REAR COVER INSTALLATION

(1) Measure the protrusion of the rear output shaft bearing (A in the illustration), and the second recess (B in the illustration). Calculate C by subtracting A from B.
Then select spacer so that difference between C and spacer thickness may attain the following standard value.

**Standard value: 0–0.1 mm (0–.004 in.)**

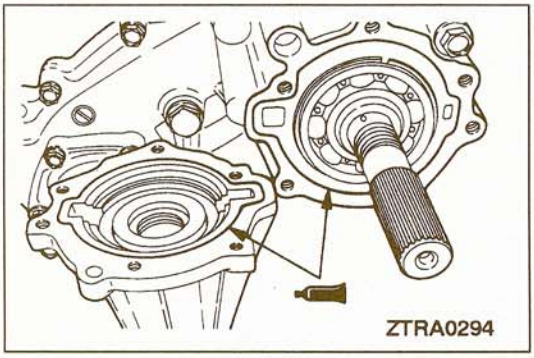


(2) Apply sealant to the rear cover and its mounting bolt thread before installation.

**Specified sealant:**
**Cover**
**Mitsubishi genuine sealant Part No. 99774 or equivalent**
**Bolt**
**3M STUD Locking No. 4170 or equivalent**

NOTE
Be sure to press out the sealant uniformly without a break or so as not to cause a spill-over after installation.

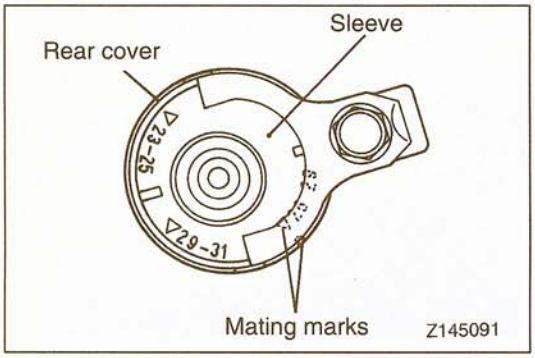


### ▶P◀ SPEEDOMETER GEAR INSTALLATION

(1) Match the mating marks to the number of teeth.

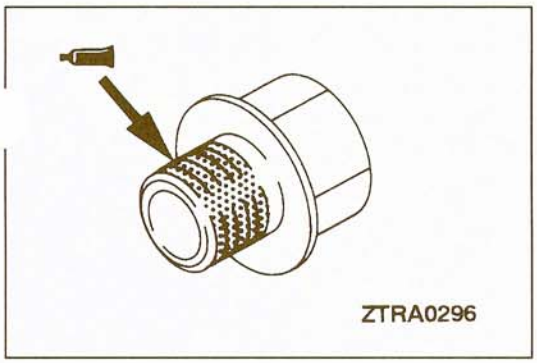


### ▶Q◀POPPET PLUG INSTALLATION

(1) Apply sealant to the poppet plug before installation.

**Specified sealant:**
**3M ATD Part No. 8660 or equivalent**

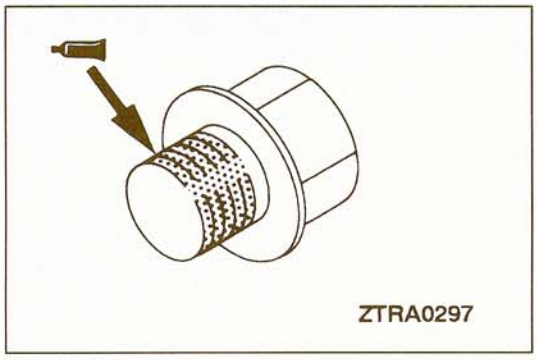


### ▶R◀PLUG INSTALLATION

(1) When the plug is reused, apply sealant to the plug before installation.

**Specified sealant:**
**3M ATD Part No. 8660 or equivalent**

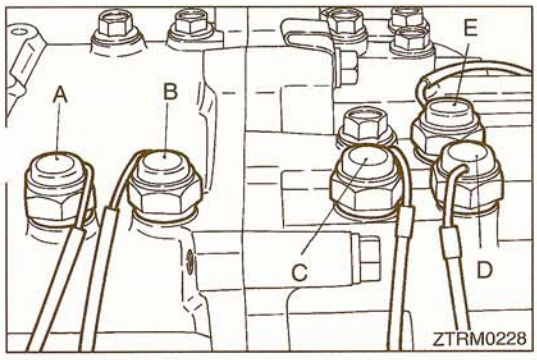


### ▶S◀DETECTING SWITCH INSTALLATION

(1) Install the detecting switches to their respective positions correctly.

A: with ball incorporated and having brown connector
B: with ball incorporated and having black connector
C: with ball separated and having brown connector
D: with ball separated and having black connector
E: with ball separated and having white connector

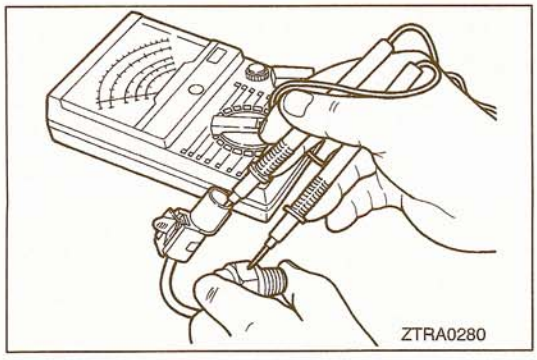


## INSPECTION

23301340016

### Detecting switch inspection

(1) Check for continuity between the connector terminal and the switch body.

| Switch condition | Continuity |
|---|---|
| Push switch end | Not provided |
| Release switch end | Provided |

# REAR OUTPUT SHAFT

23301360012

## DISASSEMBLY AND REASSEMBLY

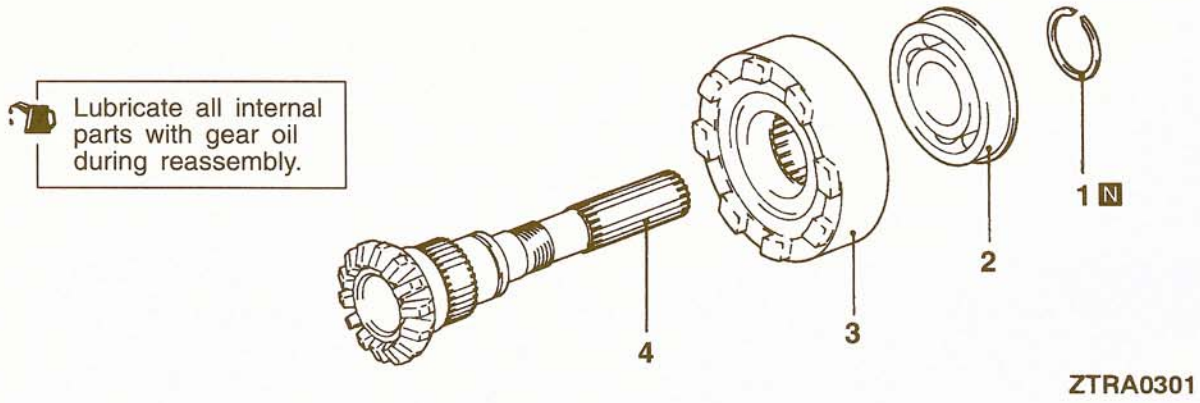


**Disassembly steps**

◀A▶ ▶B◀ 1. Snap ring
◀A▶ ▶A◀ 2. Ball bearing
3. Viscous coupling
4. Rear output shaft

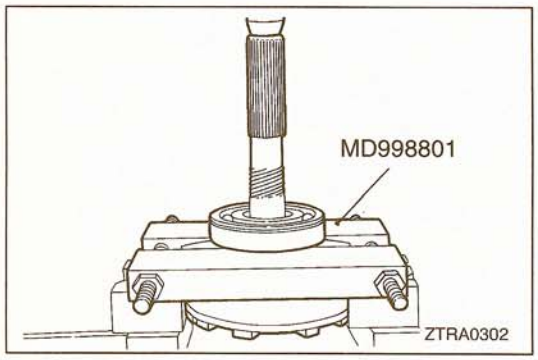


### DISASSEMBLY SERVICE POINT

**◀A▶ BALL BEARING REMOVAL**

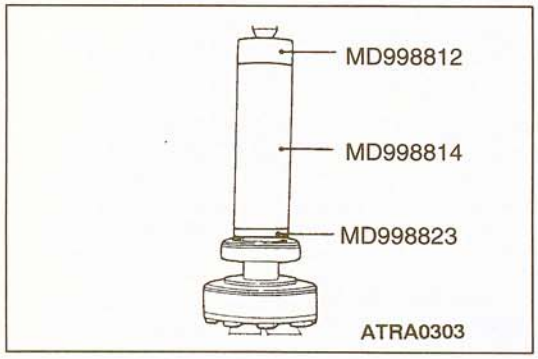


### REASSEMBLY SERVICE POINTS

**▶A◀ BALL BEARING INSTALLATION**

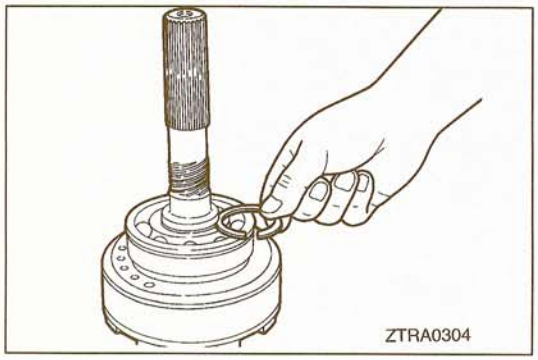


**▶B◀ SNAP RING INSTALLATION**

(1) Select and install the thickest snap ring that will fit in the snap ring groove.

**Standard value: 0–0.08 mm (0–.0031 in.)**

**TSB Revision**

# CENTER DIFFERENTIAL CASE

23301390011

## DISASSEMBLY AND REASSEMBLY

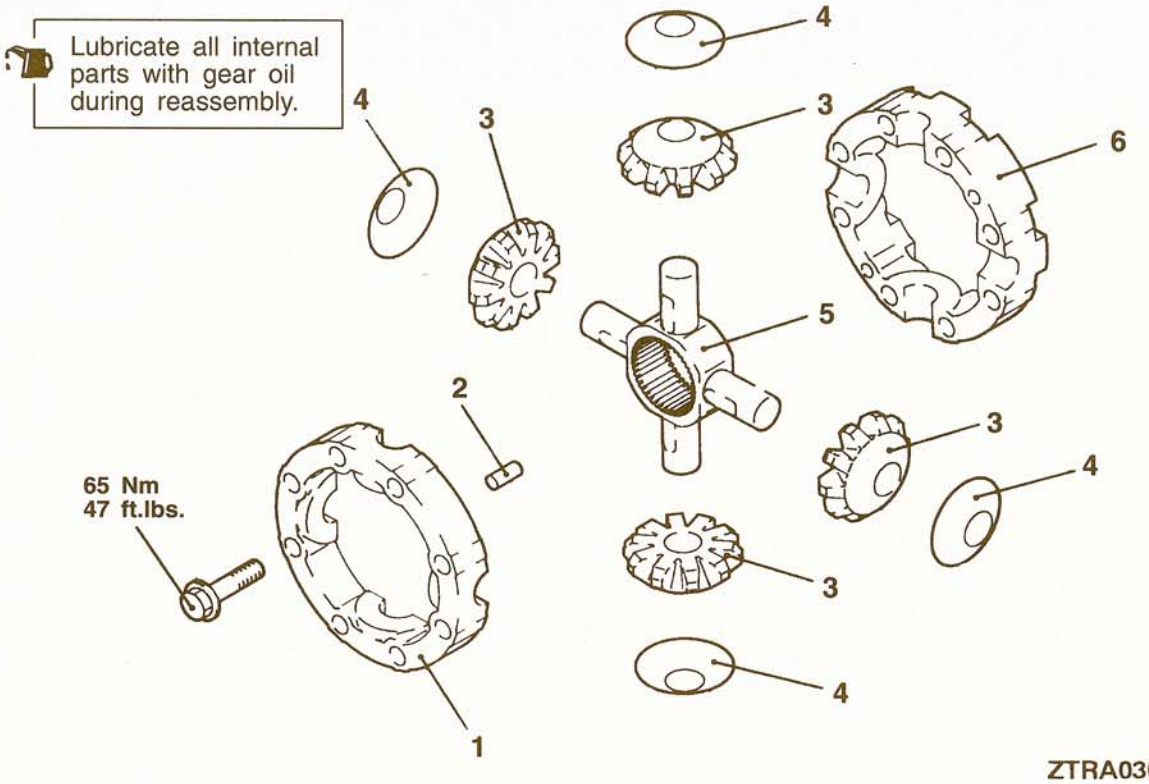


**Disassembly steps**

▶A◀ 1. Center differential case front
2. Dowel pin
3. Pinion
4. Thrust washer
5. Pinion shaft
6. Center differential case rear

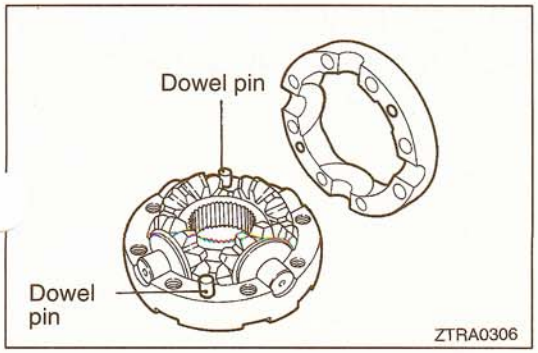


## REASSEMBLY SERVICE POINT

### ▶A◀ CENTER DIFFERENTIAL CASE INSTALLATION

(1) Assemble the front and rear center differential cases together with attention paid to the dowel pin position and with the match marks on the outer circumferences in alignment.

TSB Revision

# 2-4WD SYNCHRONIZER

23301420017

## DISASSEMBLY AND REASSEMBLY




ZTRA0307

**Disassembly steps**

- ▶C◀ 1. Snap ring
- 2. 2-4WD synchronizer hub
- 3. Synchronizer spring
- ▶B◀ 4. Outer synchronizer ring
- 5. Synchronizer center cone
- ▶A◀ 6. Inner synchronizer ring
- 7. Drive sprocket
- 8. Needle bearing
- 9. Front drive pinion

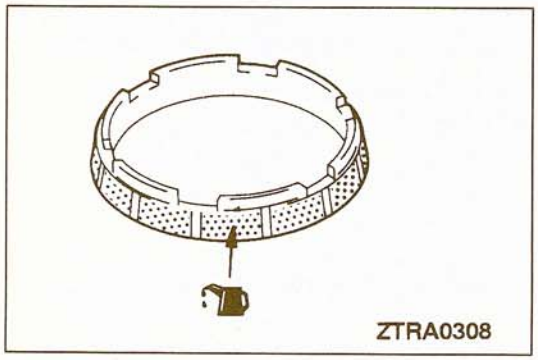

ZTRA0308

## REASSEMBLY SERVICE POINTS

### ▶A◀ INNER SYNCHRONIZER RING INSTALLATION

(1) Apply transmission fluid to the cone contacting surface of the synchronizer ring.

TSB Revision

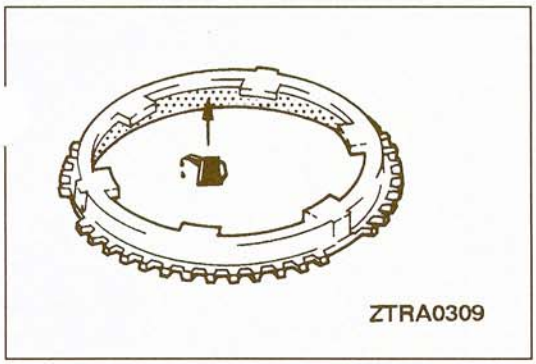


### ▶B◀ OUTER SYNCHRONIZER RING INSTALLATION

(1) Apply transmission fluid to the cone contacting surface of the synchronizer ring.

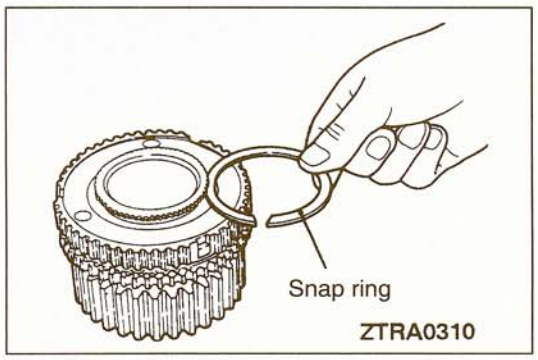


### ▶C◀ SNAP RING INSTALLATION

(1) Select and install the thickest snap ring that will fit in the groove.

**Standard value: 0–0.08 mm (0–.0031 in.)**

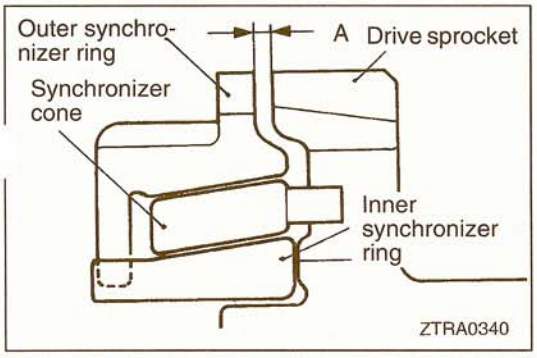


## INSPECTION

23301430010

### SYNCHRONIZER RING, SYNCHRONIZER CONE

(1) Install the inner and outer synchronizer rings and cone to the drive sprocket, and measure the dimension A in the illustration. If the dimension A is below the limit, replace the parts as a set.

**Limit: 0.3 mm (.012 in.)**

NOTE
The scratches found on the cone surface in the direction of rotation are caused by the liner of the synchronizer ring. Therefore, no replacement is required as long as the abovementioned clearance is maintained.

# TRANSFER DRIVE SHAFT

23301450016

## DISASSEMBLY AND REASSEMBLY

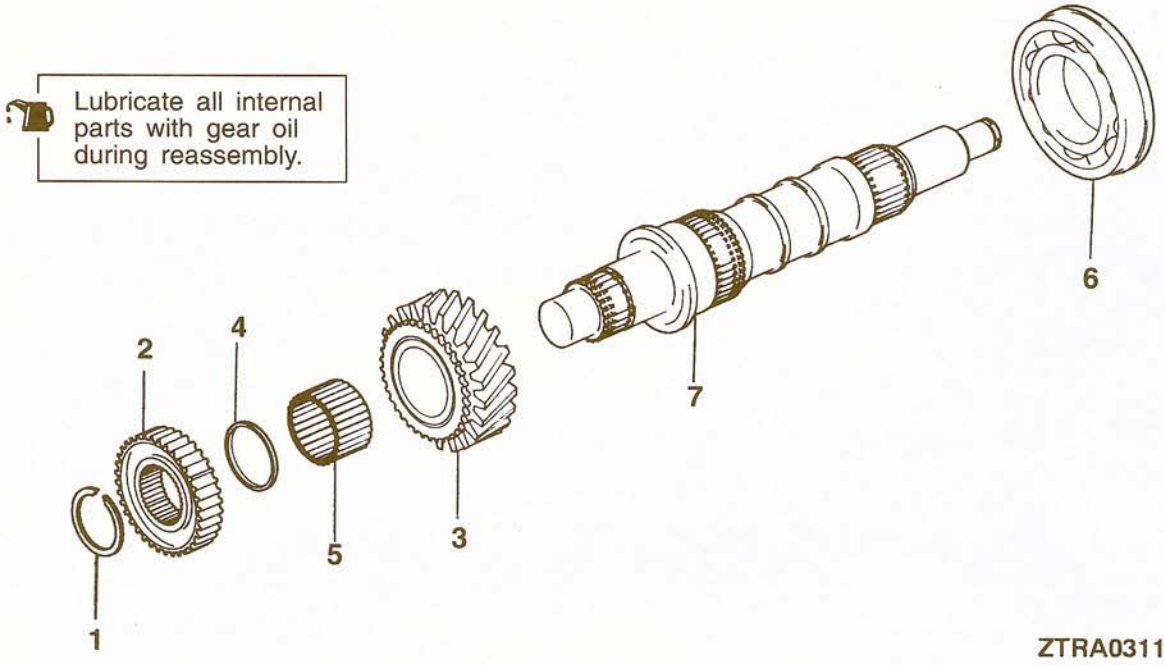


**Disassembly steps**

▶B◀ 1. Snap ring
2. H-L clutch hub
3. Low speed gear
4. Bearing spacer
5. Needle bearing
◀A▶ ▶A◀ 6. Ball bearing
7. Transfer drive shaft

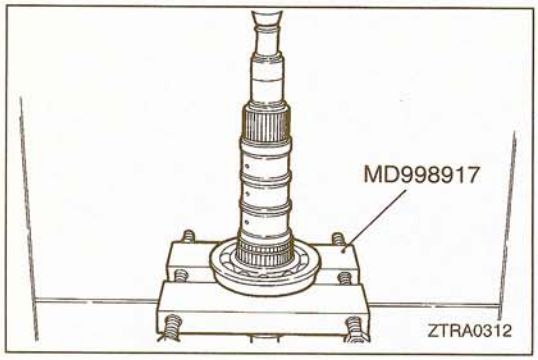


### DISASSEMBLY SERVICE POINT

◀A▶ BALL BEARING REMOVAL

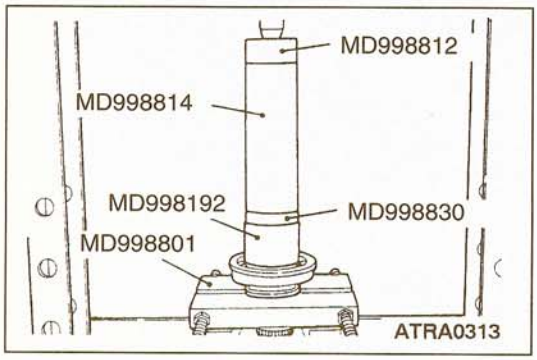


### REASSEMBLY SERVICE POINTS

▶A◀ BALL BEARING INSTALLATION

TSB Revision

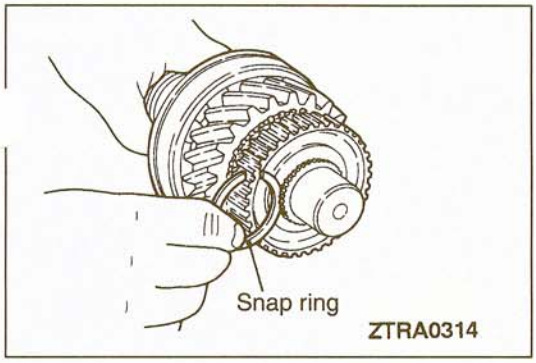


**▶B◀ SNAP RING INSTALLATION**

(1) Select and install the thickest snap ring that will fit in the groove.

**Standard value: 0–0.08 mm (0–.0031 in.)**

# FRONT OUTPUT SHAFT

23301480015

## DISASSEMBLY AND REASSEMBLY

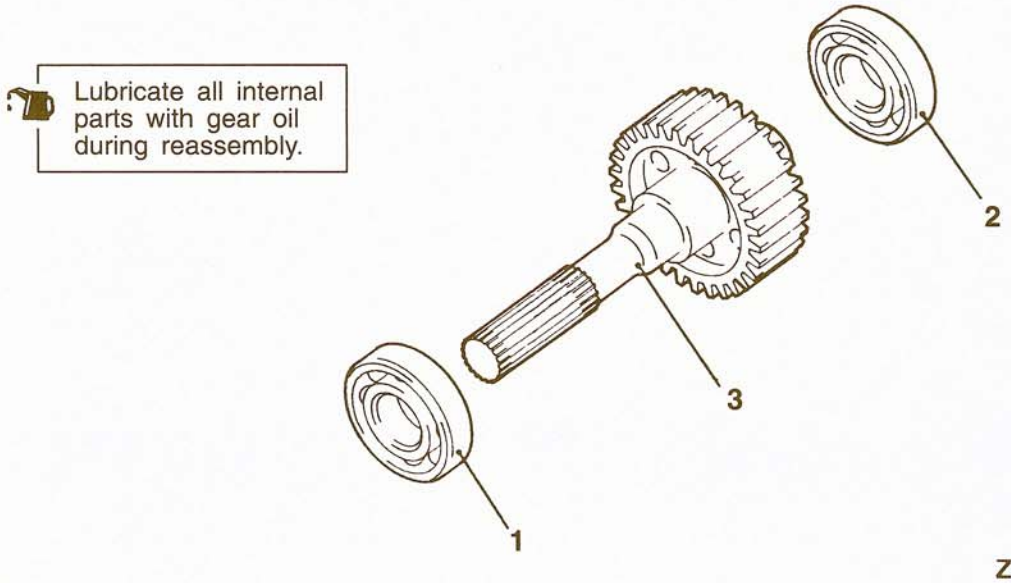


**Disassembly steps**

◀A▶ ▶A◀ 1. Ball bearing
◀A▶ ▶A◀ 2. Ball bearing
3. Front output shaft

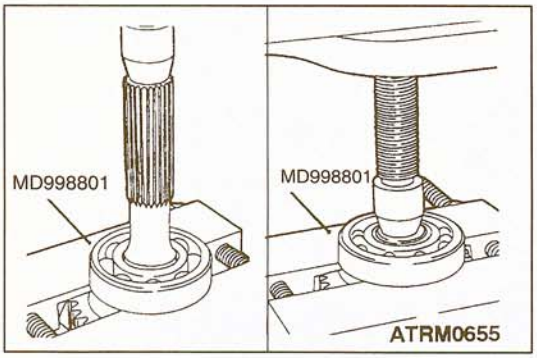


### DISASSEMBLY SERVICE POINT

◀A▶ BALL BEARING REMOVAL

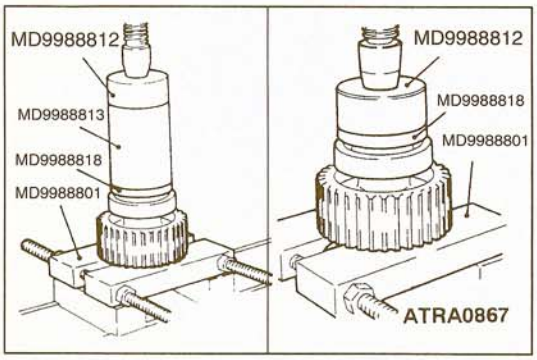


### REASSEMBLY SERVICE POINT

▶A◀ BALL BEARING INSTALLATION

TSB Revision

# INPUT GEAR

23301510011

## DISASSEMBLY AND REASSEMBLY

Lubricate all internal parts with gear oil during reassembly.

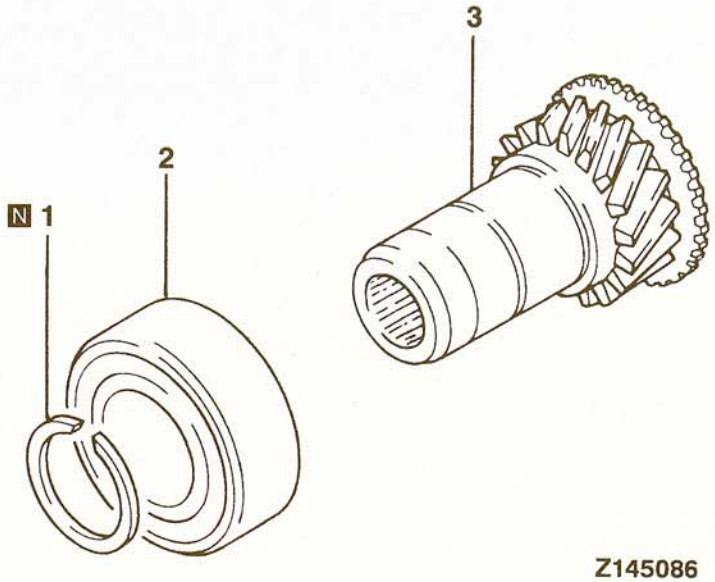


Z145086

**Disassembly steps**

▶B◀ 1. Snap ring
◀A▶ ▶A◀ 2. Bearing
3. Input gear

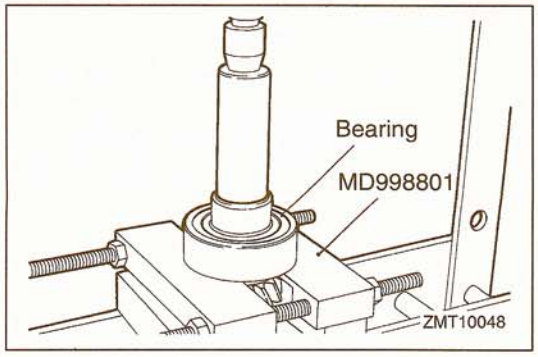


### DISASSEMBLY SERVICE POINT

◀A▶ BEARING REMOVAL

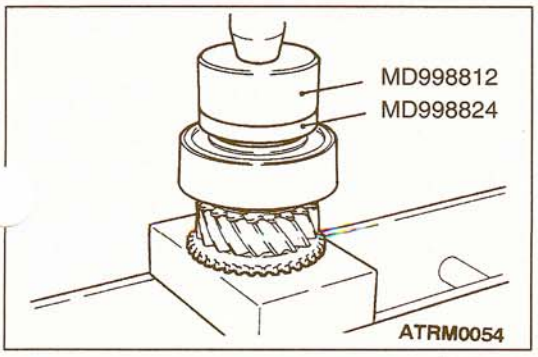


### REASSEMBLY SERVICE POINTS

▶A◀ BEARING INSTALLATION

TSB Revision

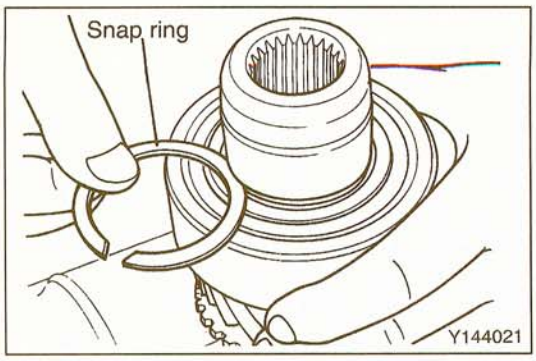


### ▶B◀ SNAP RING INSTALLATION

(1) Select the thickest snap ring that will fit into the groove in the front end of the input gear and install it.

**Standard value: 0–0.06 mm (0–.0024 in.)**

## SPEEDOMETER GEAR

23301570019

### DISASSEMBLY AND REASSEMBLY

Lubricate all internal parts with gear oil during reassembly.

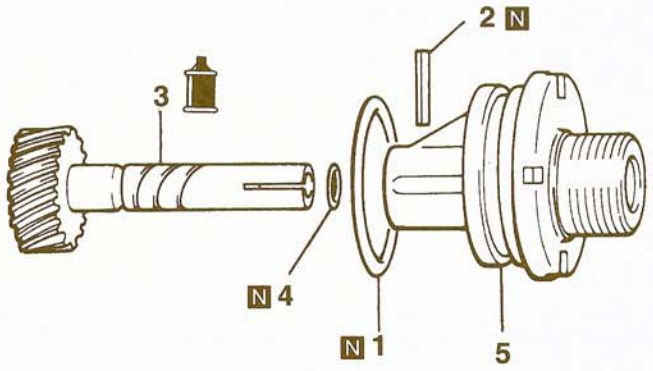


**Disassembly steps**

1. O-ring
▶B◀ 2. Spring pin
▶A◀ 3. Speedometer driven gear
4. O-ring
5. Sleeve

### REASSEMBLY SERVICE POINTS

### ▶A◀ SPEEDOMETER DRIVEN GEAR INSTALLATION

(1) Apply a thin coat of gear oil to the shaft of the speedometer driven gear.

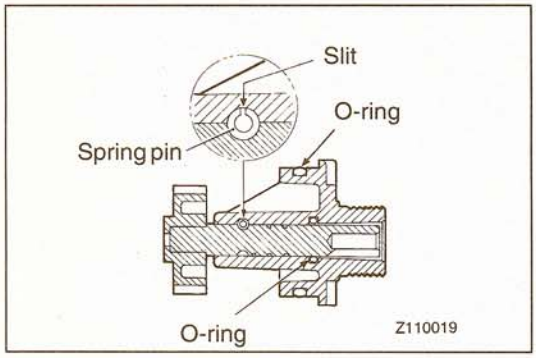


### ▶B◀ SPRING PIN INSTALLATION

(1) Drive the spring pin into position so that its slit faces the direction shown in the illustration.

TSB Revision

# AUTOMATIC TRANSMISSION OVERHAUL <V4AW3>

## CONTENTS

23309000114


CENTER DIFFERENTIAL CASE ..... 106
COUNTERSHAFT GEAR ..... 102
DIRECT CLUTCH ..... 53
FORWARD CLUTCH ..... 56
FRONT OUTPUT SHAFT ..... 109
FRONT PLANETARY GEAR ..... 59
GENERAL INFORMATION ..... 2
LOWER VALVE BODY ..... 85
OIL PUMP ..... 46
OVERDRIVE PLANETARY GEAR AND OVERDRIVE DIRECT CLUTCH ..... 48
OVERDRIVE SUPPORT ..... 51
PLANETARY SUN GEAR AND ONE-WAY CLUTCH No.1 ..... 60
REAR OUTPUT SHAFT ..... 107
REAR PLANETARY GEAR, OUTPUT SHAFT AND FIRST & REVERSE BRAKE ..... 64
SECOND BRAKE ..... 62
SECOND COAST BRAKE PISTON ..... 69
SPECIAL TOOLS ..... 11
SPECIFICATIONS ..... 5
- Accumulator Piston Spring Identification ..... 7
- Adjustment Snap Rings and Spacers ..... 9
- Gear Ratio Table ..... 5
- Sealants ..... 11
- Service Specifications ..... 5
- Torque Specifications ..... 8
- Transmission Model Table ..... 5
- Valve Body Spring Identification ..... 7

SPEEDOMETER GEAR ..... 110
TRANSFER ..... 90
TRANSFER CASE PLATE ..... 100
TRANSFER DRIVE SHAFT ..... 108
TRANSFER INPUT GEAR ..... 101
TRANSMISSION ..... 17
TRANSMISSION AND TRANSFER ..... 15
2-4WD SYNCHRONIZER ..... 104
UPPER VALVE BODY ..... 76
VALVE BODY ..... 70

# GENERAL INFORMATION

23300010086

**Precautions to be taken when disassembling and reassembling the transmission**

- Because the automatic transmission is composed of component parts of an especially high degre of precision, these parts should be very carefully handled during disassembly and assembly so as not to scar or scratch them.
- A rubber mat should be placed on the workbench, and it should always be kept clean.
- During disassembly, cloth gloves or shop towels should not be used. If such items must be used, either use articles made of nylon, or use paper towels.
- All disassembled parts must be thoroughly cleaned.
  Metal parts may be cleaned with ordinary detergents, but must be thoroughly air dried.
- Clean the clutch disc, resin thrust plate and rubber parts by using ATF (automatic transmission fluid), being very careful that dust, dirt, etc. do not adhere to them.
- Do not reuse gaskets, oil seals, or rubber parts.
  Replace such parts with new ones at every ressembly. The O-ring of the oil level gauge need not be replaced.
- Do not use grease other than petrolatum jelly.
- Apply ATF to friction components, rotating parts, and sliding parts before installation.
- Do not apply sealer or adhesive to gaskets.
- When a bushing must be replaced, replace the assembly in which it is incorporated.
- If the transmission main unit is damaged, also disassemble and clean the cooler system.

## SECTIONAL VIEW

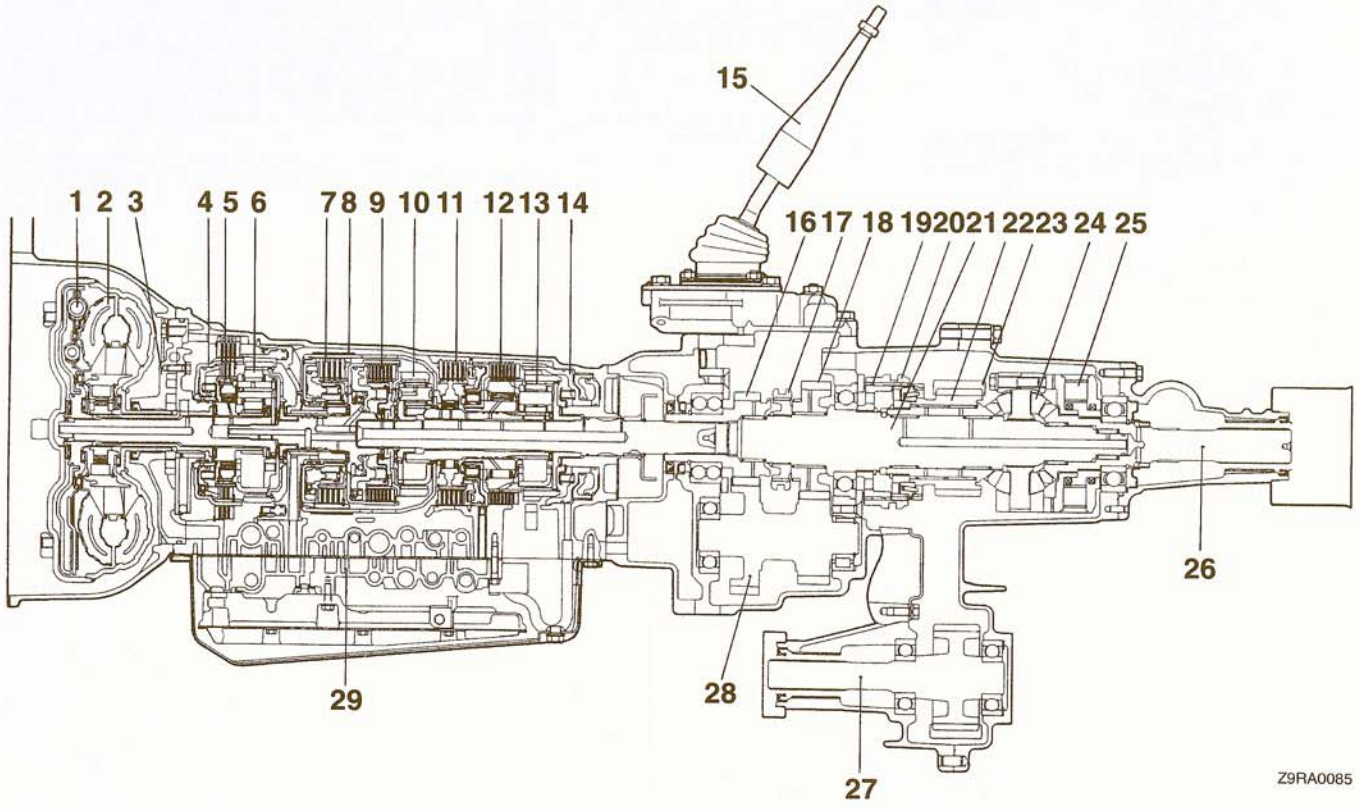


1. Torque converter clutch
2. Torque converter
3. Oil pump
4. Overdrive clutch
5. Overdrive brake
6. Overdrive planetary gear
7. Direct clutch
8. Second coast brake
9. Forward clutch
10. Front planetary gear
11. Second brake
12. First & reverse brake
13. Rear planetary gear
14. First & reverse brake piston
15. Transfer control lever
16. Input gear
17. High-low clutch
18. Low speed gear
19. Differential lock hub
20. 2-4WD synchronizer sleeve
21. Transfer drive shaft
22. Drive sprocket
23. Chain
24. Center differential
25. Viscous coupling
26. Rear output shaft
27. Front output shaft
28. Counter gear
29. Valve body

**TSB Revision**

## HYDRAULIC CONTROL SYSTEM

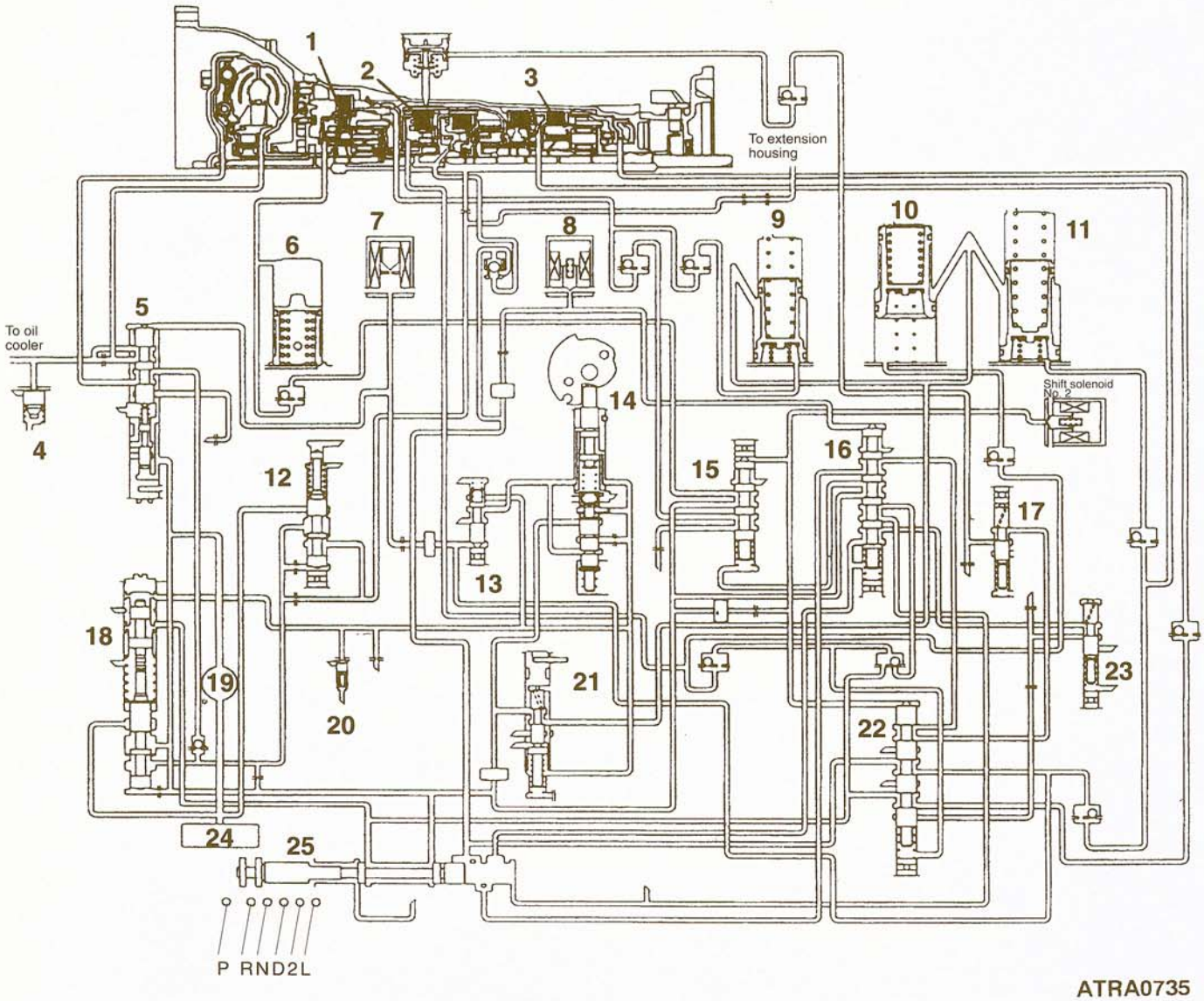


ATRA0735

1. Overdrive direct clutch
2. Direct clutch
3. 1st & Rev. brake
4. Cooler bypass valve
5. Torque converter clutch relay valve
6. $C_0$ accumulator
7. Lock-up solenoid
8. Shift solenoid No.1
9. $B_0$ accumulator
10. $C_2$ accumulator
11. $B_2$ accumulator
12. Secondary regulator valve
13. Cut back valve
14. Throttle valve
15. 3-4 shift valve
16. 2-3 shift valve
17. Second coast modulator valve
18. Primary regulator valve
19. Oil pump
20. Pressure release
21. Accumulator control valve
22. 1-2 shift valve
23. Low coast modulator valve
24. Strainer
25. Manual valve

**TSB Revision**

# SPECIFICATIONS

23300020102

## TRANSMISSION MODEL TABLE

| Transmission model | Gear ratio | Torque converter clutch | VCU | Speedometer gear ratio | Vehicle model | Engine model |
|---|---|---|---|---|---|---|
| V4AW3-7-LIR | A | × | × | 25/8 | V43W | 6G72 |
| V4AW3-7-MGRL | A | × | × | 27/9 | V45W | 6G74 |
| V4AW3-7-MHRL | A | × | × | 28/9 | V45W | 6G74 |

## GEAR RATIO TABLE

23302280027

| Items | | A |
|---|---|---|
| Transmission | 1st | 2.804 |
| | 2nd | 1.531 |
| | 3rd | 1.000 |
| | 4th | 0.754 |
| | Reverse | 2.393 |
| Transfer | High | 1.000 |
| | Low | 1.900 |

## SERVICE SPECIFICATIONS

23300030105

mm (in.)

| Items | | Standard value | Limit |
|---|---|---|---|
| **Transmission** | Clearance between snap ring and flange | 0.70–1.22 (.0275–.0480) | – |
| | Clearance between snap ring and flange | 0.62–1.98 (.0244–.0779) | – |
| | Second brake piston stroke | 1.5–3.0 (.059–.118) | – |
| | Output shaft end play | 0.27–0.86 (.0106–.0339) | – |
| | Torque converter housing clearance | 31.1 or more (1.22 or more) | – |
| | Oil pump body clearance | 0.07–0.15 (.0028–.0059) | 0.3 (.012) |
| | Oil pump tip clearance | 0.11–0.14 (.0043–.0055) | 0.3 (.012) |
| | Oil pump side clearance | 0.02–0.05 (.0008–.0020) | 0.3 (.012) |
| | Overdrive direct clutch disc thickness | – | 1.84 (.0724) |

| Items | | Standard value | Limit |
|---|---|---|---|
| Transmission | Overdrive direct clutch return spring free length | Approx. 15.8 (Approx. .622) | – |
| | Overdrive direct piston stroke | 1.85–2.15 (.0728–.0846) | – |
| | Overdrive support assembly return spring free length | Approx. 18.6 (Approx. .732) | – |
| | Direct clutch disc thickness | – | 1.84 (.0724) |
| | Direct clutch return spring free length | Approx. 19.8 (Approx. .780) | – |
| | Direct clutch piston stroke | 1.37–1.67 (.0539–.0657) | – |
| | Forward clutch disc thickness | – | 1.84 (.0724) |
| | Forward clutch return spring free length | Approx. 11.55 (Approx. .4547) | – |
| | Forward clutch piston stroke | 2.90–4.29 (.1141–.1689) | – |
| | Second brake assembly return spring free length | Approx. 15.05 (Approx. .5925) | – |
| | First & reverse brake disc thickness | – | 1.51 (.0594) |
| | First & reverse brake return spring free length | Approx. 13.09 (Approx. .5154) | – |
| | Oil pump body busing ID | – | 38.18 (1.503) |
| | Oil pump stator shaft bushing ID (Front) | – | 21.57 (.849) |
| | Oil pump stator shaft bushing ID (Rear) | – | 27.07 (1.066) |
| | Overdrive direct clutch drum bushing ID | – | 27.11 (1.067) |
| | Overdrive planetary gear bushing ID | – | 11.27 (.444) |
| | Direct clutch drum bushing ID | – | 53.97 (2.125) |
| | Forward clutch drum bushing ID | – | 24.07 (.948) |
| | Front planetary ring gear bushing ID | – | 24.07 (.948) |
| | Planetary sun gear bushing ID | – | 24.07 (.948) |
| Transfer | H-L clutch hub end play | 0–0.08 (0–.0031) | – |
| | Input gear bearing end play | 0–0.06 (0–.0024) | – |
| | Center differential end play | 0.025–0.150 (.00098–.00591) | – |
| | Differential lock hub end play | 0–0.08 (0–.0031) | – |
| | 2-4WD synchronizer hub end play | 0–0.08 (0–.0031) | – |
| | Rear output shaft bearing end play | 0–0.08 (0–.0031) | – |
| | Countershaft gear end play | 0–0.15 (0–.0059) | – |
| | Countershaft gear bearing end play | 0–0.08 (0–.0031) | – |
| | Clearance between outer synchronizer ring back side and drive sprocket | – | 0.3 (.012) |

TSB Revision 98-23-011

## VALVE BODY SPRING IDENTIFICATION

23302290013

mm (in.)

| Spring | | Free height | Outside diameter | Number of loops | Wire diameter |
|---|---|---|---|---|---|
| Lower valve body | 1-2 shift valve spring | 30.8 (1.213) | 9.7 (.381) | 8.5 | 0.9 (.035) |
| | Primary regulator valve spring | 62.3 (2.453) | 18.6 (.732) | 12.5 | 1.7 (.067) |
| | Accumulator control valve spring | 33.9 (1.335) | 8.8 (.346) | 10.0 | 0.8 (.031) |
| | Check valve spring | 17.53 (.6902) | 12.1 (.476) | 3.2 | 1.1 (.043) |
| | Relief valve spring | 11.2 (.441) | 6.4 (.252) | 7.5 | 0.9 (.035) |
| Upper valve body | Downshift valve | 27.3 (1.075) | 8.7 (.343) | 10.5 | 1.0 (.039) |
| | Throttle valve | 20.6 (.811) | 9.2 (.362) | 7.5 | 0.7 (.028) |
| | 3-4 shift valve | 30.8 (1.213) | 9.7 (.381) | 8.5 | 0.9 (.035) |
| | Second coast modulator valve | 30.9 (1.217) | 8.6 (.339) | 9.5 | 1.1 (.043) |
| | Lock-up relay valve | 21.4 (.843) | 5.5 (.217) | 15.5 | 0.6 (.024) |
| | Secondary regulator valve | 30.9 (1.217) | 11.2 (.441) | 8.5 | 1.5 (.059) |
| | Cut back valve | 21.8 (.858) | 6.0 (.236) | 11.5 | 0.6 (.024) |
| | 2-3 shift valve | 30.8 (1.213) | 9.7 (.381) | 8.5 | 0.9 (.035) |
| | Low coast modulator valve | 30.4 (1.197) | 8.3 (.327) | 8.5 | 0.8 (.031) |

## ACCUMULATOR PISTON SPRING IDENTIFICATION

23302430019

mm (in.)

| Spring | | Free height | Outside diameter | Number of loops | Wire diameter |
|---|---|---|---|---|---|
| $C_0$ | Outer spring 1 | 74.6 (2.937) | 20.9 (.823) | 12.3 | 2.3 (.091) |
| | Outer spring 2 | 46.1 (1.811) | 14.0 (.551) | 12.5 | 2.2 (.087) |
| $C_2$ | Outer spring <6G72> | 24.0 (.945) | 12.0 (.472) | 5.4 | 1.7 (.067) |
| | Outer spring <6G74> | 20.0 (.787) | 12.1 (.476) | 4.5 | 1.7 (.067) |
| | Inner spring <6G74> | 70.2 (2.764) | 20.2 (.795) | 10.1 | 2.3 (.091) |
| | Inner spring 1 <6G72> | 64.0 (2.520) | 20.2 (.795) | 10.3 | 2.2 (.087) |
| | Inner spring 2 <6G72> | 42.1 (1.657) | 14.7 (.579) | 9.25 | 2.5 (.098) |
| $B_0$ | Outer spring | 14.5 (.571) | 13.0 (.512) | 3.0 | 2.1 (.083) |
| | Inner spring | 62.0 (2.441) | 16.0 (.630) | 11.9 | 2.1 (.083) |

**TSB Revision**

| Spring | | Free height | Outside diameter | Number of loops | Wire diameter |
|---|---|---|---|---|---|
| $B_2$ | Outer spring <6G72> | 23.0 (.906) | 14.0 (.551) | 4.9 | 2.0 (.079) |
| | Outer spring <6G74> | 22.0 (.886) | 14.0 (.551) | 5.2 | 1.9 (.075) |
| | Inner spring <6G72> | 70.5 (2.776) | 19.7 (.776) | 12.9 | 2.7 (.106) |
| | Inner spring <6G74> | 72.6 (2.858) | 19.9 (.783) | 12.5 | 2.8 (.110) |

## TORQUE SPECIFICATIONS

23302310023

| Items | | Nm | ft.lbs. |
|---|---|---|---|
| Transmission | Transmission case | 36 | 26 |
| | Case adapter | 36 | 26 |
| | Transmission control shaft lever | 16 | 12 |
| | Parking lock rod | 7 | 5 |
| | Speed sensor | 16 | 12 |
| | O/D support mounting bolt | 26 | 19 |
| | Oil pump | 22 | 16 |
| | Throttle cable | 6 | 4.3 |
| | Valve body mounting bolt | 10 | 7.2 |
| | Transmission wire | 6 | 4.3 |
| | Oil strainer | 10 | 7.2 |
| | Oil screen | 7 | 5 |
| | Oil pan | 8 | 5.8 |
| | Drain plug | 21 | 15 |
| | Oil temperature sensor | 15 | 11 |
| | Converter housing 10 mm (.39 in.) diameter bolt | 35 | 25 |
| | Converter housing 12 mm (.47 in.) diameter bolt | 58 | 42 |
| | Park/neutral position switch bolt | 13 | 9 |
| | Park/neutral position switch nut | 4 | 2.9 |
| | Oil pump stator | 8 | 5.8 |
| | Valve body upper bolt | 7 | 5 |
| | Manual detent spring | 10 | 7.2 |
| | Throttle valve cam | 10 | 7.2 |
| | Shift solenoid No.1 | 10 | 7.2 |
| | Shift solenoid No.2 | 10 | 7.2 |
| | Lock up solenoid | 10 | 7.2 |

**TSB Revision**

| Items | | Nm | ft.lbs. |
|---|---|---|---|
| Transfer | Rear cover | 19 | 14 |
| | Chain cover | 36 | 26 |
| | Center differential case | 65 | 47 |
| | Bearing retainer | 19 | 14 |
| | Oil pool cover | 9 | 6.5 |
| | Lock plate | 19 | 14 |
| | Detection switch | 36 | 26 |
| | Plug | 36 | 26 |
| | Poppet plug | 36 | 26 |
| | H-L shift rail plug | 33 | 24 |
| | Dynamic damper | 70 | 51 |
| | Side cover | 9 | 6.5 |
| | Sleeve clamp | 19 | 14 |

## ADJUSTMENT SNAP RINGS AND SPACERS

23302300020

| Part name | Thickness mm (in.) | Identification symbol | Part No. |
|---|---|---|---|
| Snap ring (For adjustment of input gear bearing end play) | 2.30 (.091) | – | MD704199 |
| | 2.35 (.093) | Red | MD704200 |
| | 2.40 (.094) | White | MD704201 |
| | 2.45 (.096) | Blue | MD704202 |
| | 2.50 (.098) | Green | MD704203 |
| Snap ring (For adjustment of H-L clutch hub end play) | 2.18 (.086) | Blue | MR110983 |
| | 2.25 (.089) | – | MR110984 |
| | 2.32 (.091) | Brown | MR110985 |
| | 2.39 (.094) | White | MR110986 |
| Snap ring (For adjustment of differential lock hub end play) | 2.56 (.101) | – | MD738386 |
| | 2.63 (.104) | Red | MD738387 |
| | 2.70 (.106) | White | MD738388 |
| | 2.77 (.109) | Blue | MD738389 |
| | 2.84 (.112) | Yellow | MD738390 |
| | 2.91 (.115) | Green | MD738391 |
| | 2.98 (.117) | Purple | MD738392 |

| Part name | Thickness mm (in.) | Identification symbol | Part No. |
|---|---|---|---|
| Snap ring (For adjustment of 2-4WD synchronizer hub end play) | 2.56 (.101) | – | MD738393 |
| | 2.63 (.104) | Red | MD738394 |
| | 2.70 (.106) | White | MD738395 |
| | 2.77 (.109) | Blue | MD738396 |
| | 2.84 (.112) | Yellow | MD738397 |
| Snap ring (For adjustment of transfer counter gear bearing end play) | 1.48 (.058) | Blue | MB919176 |
| | 1.62 (.064) | – | MB919177 |
| Spacer (For adjustment of transfer counter gear end play) | 1.77 (.070) | – | MB896728 |
| | 1.91 (.0752) | Blue | MB896729 |
| | 2.05 (.0807) | Brown | MB896730 |
| | 2.19 (.0862) | White | MB896731 |
| | 2.33 (.0917) | Red | MB896732 |
| Snap ring (For adjustment of rear output shaft bearing end play) | 2.26 (.089) | – | MD734311 |
| | 2.33 (.092) | Red | MD734312 |
| | 2.40 (.094) | White | MD734313 |
| | 2.47 (.097) | Blue | MD734314 |
| Spacer (For adjustment of center differential end play) | 0.84 (.033) | 84 | MD734326 |
| | 0.93 (.037) | 93 | MD734327 |
| | 1.02 (.040) | 02 | MD734328 |
| | 1.11 (.044) | 11 | MD734329 |
| | 1.20 (.047) | 20 | MD734330 |
| | 1.29 (.051) | 29 | MD734331 |
| | 1.38 (.054) | 38 | MD734332 |
| | 1.47 (.058) | 47 | MD734333 |
| | 1.56 (.061) | 56 | MD734334 |
| | 1.65 (.065) | 65 | MD734335 |
| | 1.74 (.069) | 74 | MD734336 |
| | 1.83 (.072) | 83 | MD734337 |
| | 1.92 (.076) | 92 | MD734338 |
| | 2.01 (.079) | 01 | MD734339 |

**TSB Revision**

## SEALANTS

23300050033

| Items | | Specified sealants and adhesives | Quantity |
|---|---|---|---|
| **Transmission** | Oil pan | Threebond Seal Packing 1281 | As required |
| **Transfer** | Adapter gasket (transmission sides) | Threebond Seal Packing 1281 | As required |
| | Adapter gasket (transfer sides) | Mitsubishi genuine sealant Part No. MD997740 or equivalent | As required |
| | Chain cover | Mitsubishi genuine sealant Part No. MD997740 or equivalent | As required |
| | Rear cover | Mitsubishi genuine sealant Part No. MD997740 or equivalent | As required |
| | Transfer case plate | Mitsubishi genuine sealant Part No. MD997740 or equivalent | As required |
| | Poppet plug | 3M ATD Part No. 8660 or equivalent | As required |
| | Plug | 3M ATD Part No. 8660 or equivalent | As required |
| | Bolt (threads) | 3M STUD Locking 4170 or equivalent | As required |

## SPECIAL TOOLS

23300060098

| Tool | Tool number and name | Supersession | Application |
|---|---|---|---|
|  | MB990929 Installer adapter | MB990929 | Installation of the oil seal |
|  | MB990936 Installer adapter | MB990936 | Installation of the oil seal |
|  | MB990938 Installer bar | MB990938 | Installation of the oil seal |

**TSB Revision**

| Tool | Tool number and name | Supersession | Application |
|---|---|---|---|
| 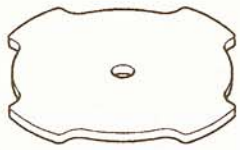 | MB991556<br>Spring compressor | — | Removal and installation of O/D support snap ring |
|  | MD998192<br>Counter gear bearing puller | MD998192 | Installation of the bearing |
| 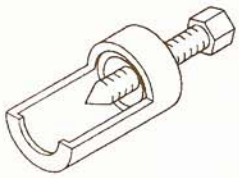 | MD998212<br>Oil pump puller | MD998212 | Removal of oil pump |
| 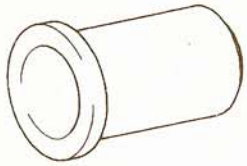 | MD998382<br>Countershaft front oil seal installer | MD998382-01 | Installation of oil pump oil seal |
|  | MD998727<br>Oil pan remover | — | Removal of oil pan |
| 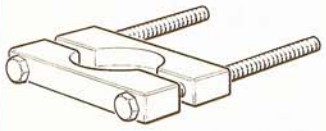 | MD998801<br>Bearing remover | MD998801 | Removal of bearing |
|  | MD998812<br>Installer cap | GENERAL SERVICE TOOL | Use with installer handle and adapter |

| Tool | Tool number and name | Supersession | Application |
|---|---|---|---|
|  | MD998813<br>Installer-100 | GENERAL SERVICE TOOL | Use with installer cap and adapter |
| 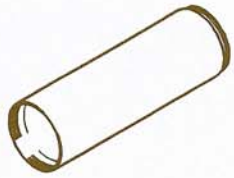 | MD998814<br>Installer-200 | MIT304180 | Use with installer cap and adapter |
|  | MD998818<br>Installer adapter (38) | GENERAL SERVICE TOOL | Installation of the bearing |
|  | MD998819<br>Installer adapter (40) | GENERAL SERVICE TOOL | |
|  | MD998821<br>Installer adapter (44) | GENERAL SERVICE TOOL | |
|  | MD998823<br>Installer adapter (48) | GENERAL SERVICE TOOL | |
|  | MD998824<br>Installer adapter (50) | GENERAL SERVICE TOOL | |

| Tool | Tool number and name | Supersession | Application |
|---|---|---|---|
|  | MD998829<br>Installer adapter (60) | MD998829-01 | Installation of the bearing |
|  | MD998830<br>Installer adapter (66) | MD998830-01 | |
| 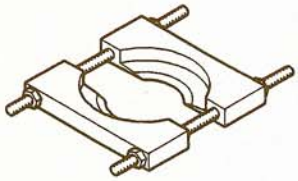 | MD998917<br>Bearing remover | MD998917-01 | Removal of bearing |
| 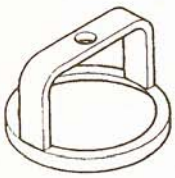 | MD998921<br>Spring compressor | — | Removal and installation of snap ring for O/D direct clutch, direct clutch, forward clutch and first & reverse brake |
| 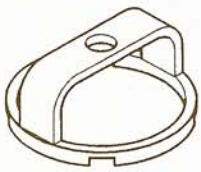 | MD998923<br>Spring compressor | — | Removal and installation of second brake snap ring |
|  | MD998924<br>Spring ring compressor retainer | — | Used with MD998921, MD998922 and MD998923 |

# TRANSMISSION AND TRANSFER

23302330012

## DISASSEMBLY AND REASSEMBLY

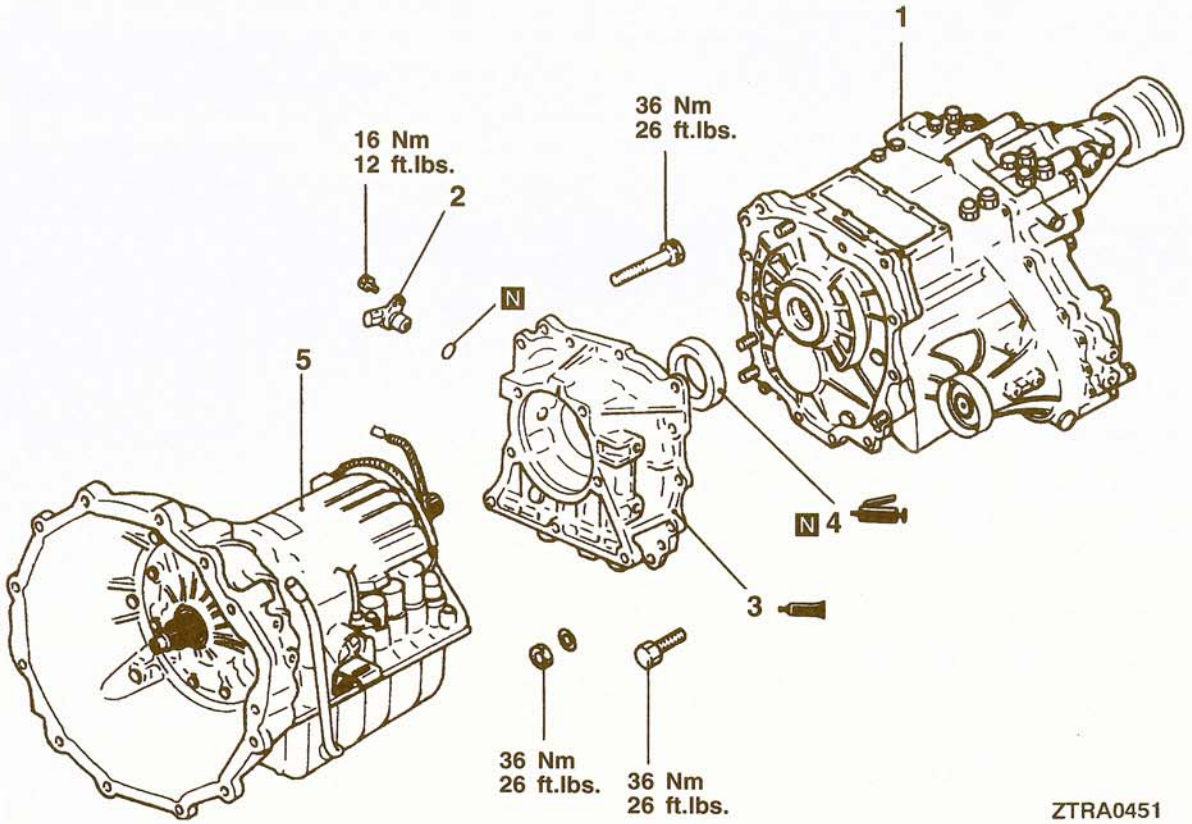


**Disassemly steps**

1. Transfer assembly
2. Speed sensor

▶B◀ 3. Transfer case adapter
▶A◀ 4. Oil seal
5. Transmission assembly

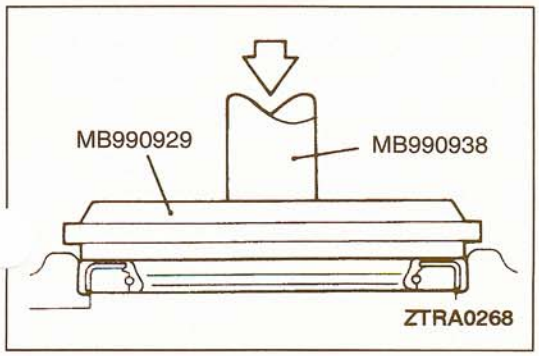


## REASSEMBLY SERVICE POINTS

### ▶A◀ OIL SEAL INSTALLATION

(1) Using the special tool, install an oil seal on the adapter, and then pack the oil seal lips with grease.

TSB Revision

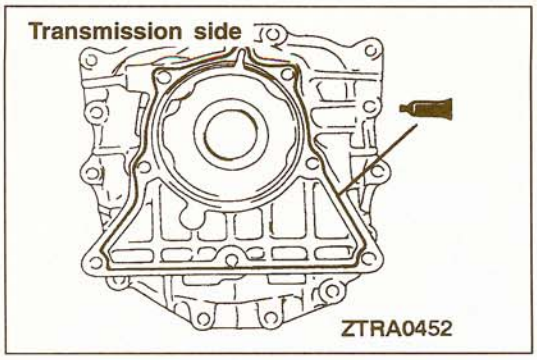


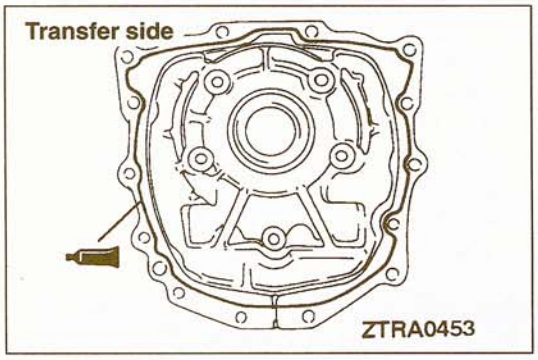


**▶B◀ TRANSFER CASE ADAPTER INSTALLATION**

**Specified sealant:**
**Threebond Seal Packing 1281: Transmission side**
**Mitsubishi genuine sealant Part No. MD997740 or equivalent: Transfer side**

**Caution**
**Squeeze the sealant out evenly to make sure that it is not broken or excessively supplied.**

# TRANSMISSION

23300820023

## DISASSEMBLY

**Caution**

1. **When removing the transmission assembly from the vehicle, care must be taken to make sure that the oil pan is not struck by the transmission jack.**
2. **The automatic transmission is composed of component parts of an especially high degree of precision. Therefore, handle these component parts very carefully during disassembly so as not to scar or scratch them.**
3. **When separating cases and other parts made of light alloys from the junctions, lightly hit them with a soft hammer (plastic hammer) if it is difficult to release them. Don't jimmy them free using a screwdriver or the like.**
4. **Replace a rubber mat on the workbench so that it may always be kept clean.**
5. **During disassembly, do not use cloth gloves or shop towels. If such items are required, use either articles made of nylon or paper towels.**
6. **Clean all disassembled parts thoroughly. Metal parts may be cleaned with ordinary detergents, but must be thoroughly air-dried.**
7. **Clean the clutch discs, brake discs, and other resin and rubber parts by using ATF (automatic transmission fluid), being very careful that dust, dirt, etc. do not adhere to them.**
8. **If the transmission proper is damaged, also disassemble and clean the cooler system.**

(1) Remove sand, mud, etc. from the exterior of the transmission.

(2) Place the transmission assembly on a bench with the oil pan down.

**Caution**

**Do not place the assembly with the oil pan up before the oil pan is removed. This is necessary to prevent foreign matter in the oil pan from entering the valve body.**

(3) Remove the torque converter.

(4) Remove the oil level gauge and oil filler tube. Remove the O-rings from the oil filler tube.

(5) Remove the harness connector bracket and throttle cable clamp.

(6) Remove the control shaft lever.

(7) Unlock the lock washer and remove the park/neutral position switch. Remove the lock washer and grommet.

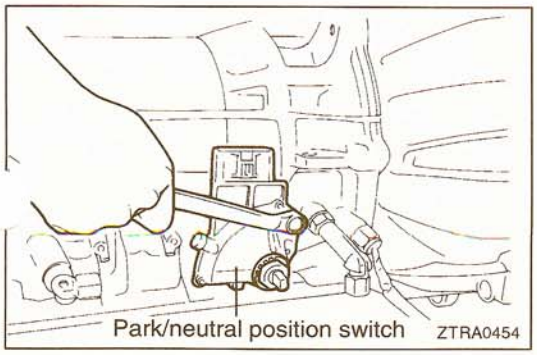

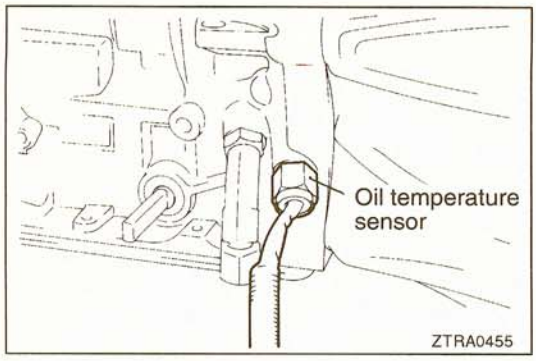


(8) Remove the oil temperature sensor.

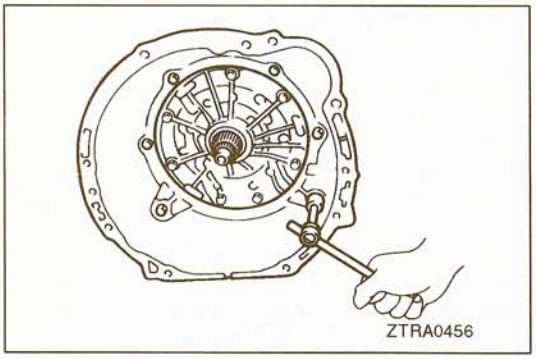


(9) Remove the torque converter housing.

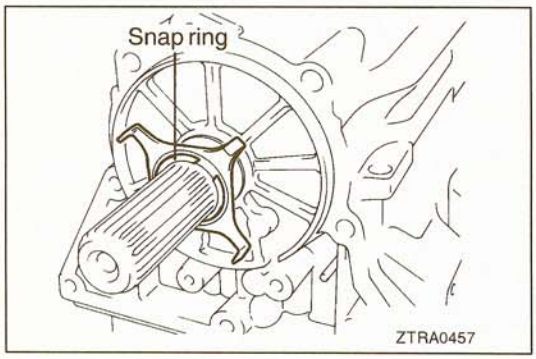


(10) Remove the snap ring. Remove the sensor rotor and then the key.

**Caution**
**Be careful not to bend the blades of the sensor rotor**

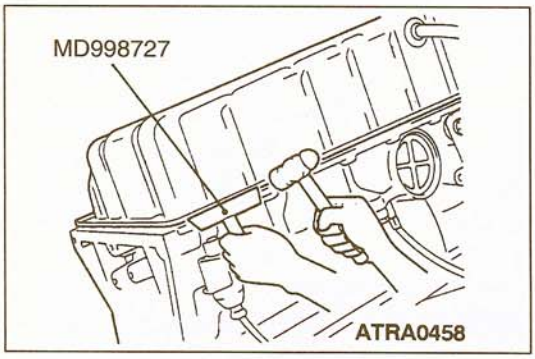


(11) Remove the 19 oil pan bolts and use the special tool (oil pan remover) to remove the oil pan.

**Caution**
**Drive in the special tool carefully so as not to deform the oil pan.**

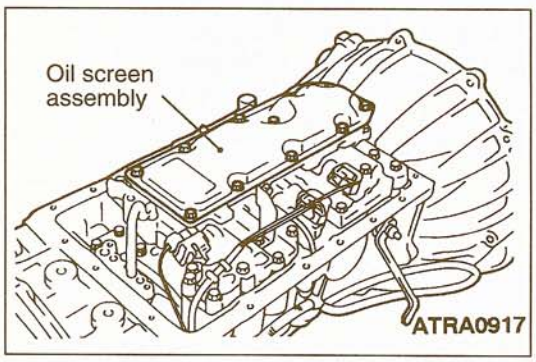


(12) Remove the 11 bolts and then remove the oil screen assembly and gasket.

**TSB Revision**

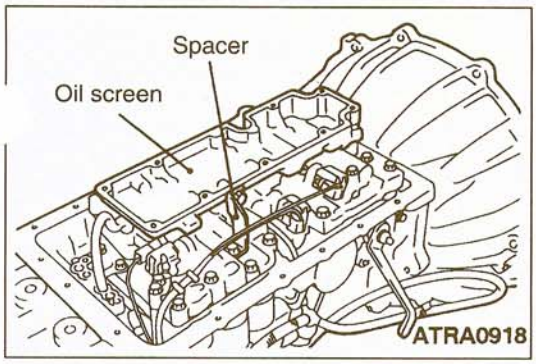


(13)Remove the 5 bolts and then remove the spacer and oil screen.
(14)Remove the two gaskets.

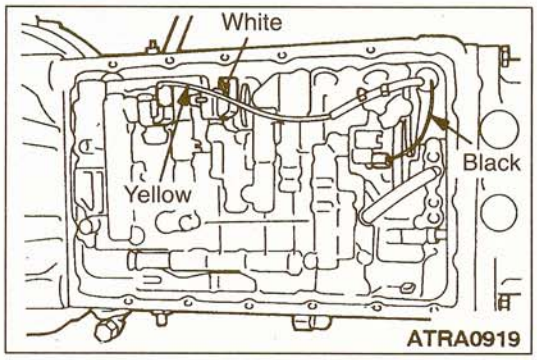


(15)Separate the 3 transmission solenoid connectors.

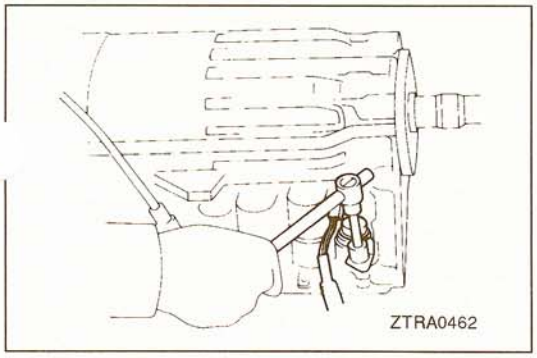


(16)Remove the grommet stopper plate from the transmission case and then remove the transmission wire.
(17)Remove the O-ring from the grommet.

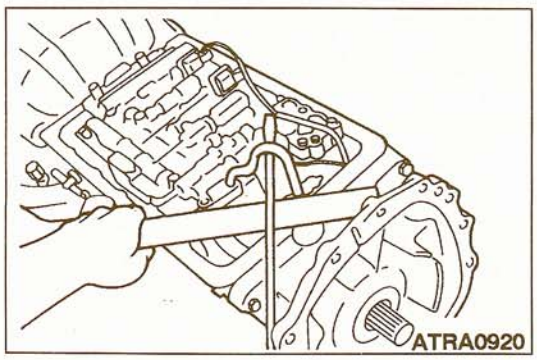


(18)Using a screwdriver, wood piece, etc., remove the first & reverse brake tube.

**Caution**
**Be careful not to deform the brake tube.**

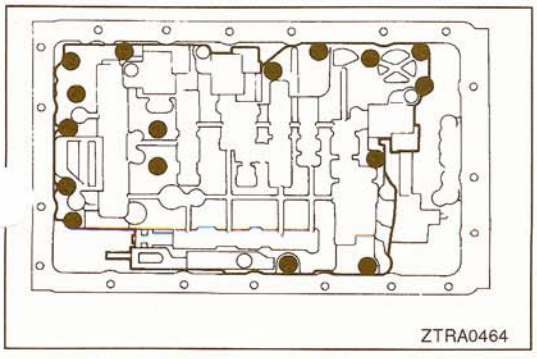


(19)Remove the 16 mounting bolts from the valve body.

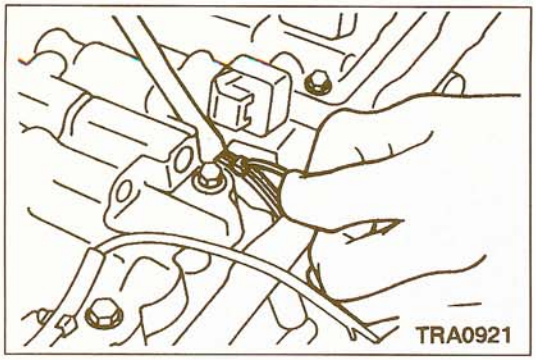


(20) Remove the throttle cable from the throttle cam. Then, remove the valve body.

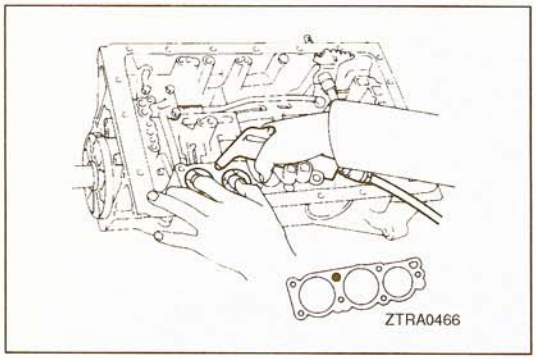


(21) Remove the two springs from the $C_0$ accumulator piston.
(22) Remove the check ball body and spring.
(23) Remove the $B_2$ and $C_2$ accumulator pistons and two springs by blowing air slowly from the illustrated oil hole.

NOTE
Both $B_2$ and $C_2$ pistons can be released by blowing air while pushing the $B_2$ piston stronger.

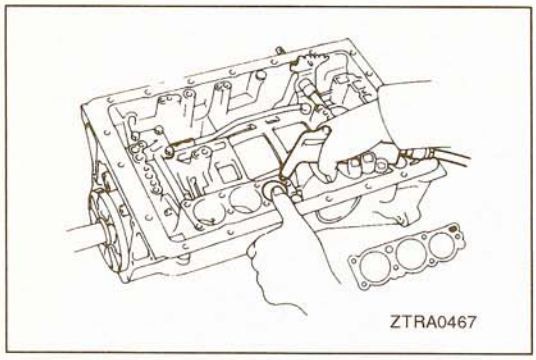


(24) Remove the $B_0$ accumulator piston and spring by blowing air slowly from the illustrated oil hole.

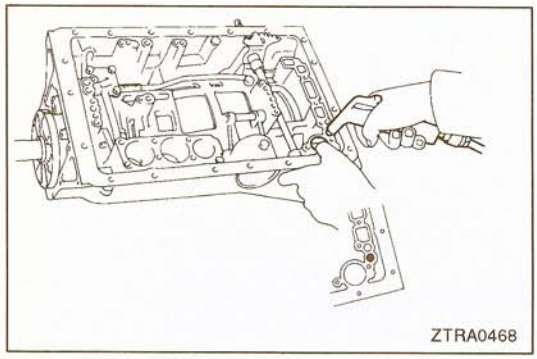


(25) Remove the $C_0$ accumulator piston and spring by blowing air slowly from the illustrated oil hole.
(26) Remove the O-ring from each piston.

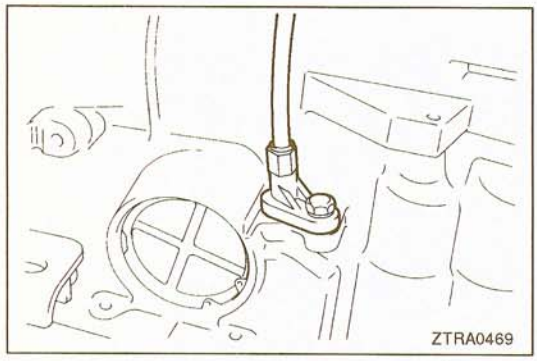


(27) Remove the bolt. Pull out the throttle cable while holding the retainer.
(28) Remove the O-ring from the throttle cable.

**TSB Revision**

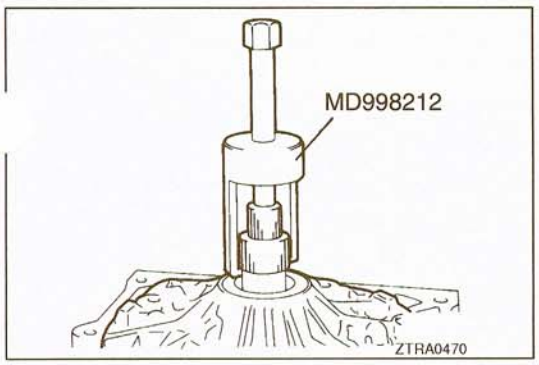


(29) Remove the 7 bolts attaching the oil pump.
(30) Using the special tool (oil pump puller), remove the oil pump.

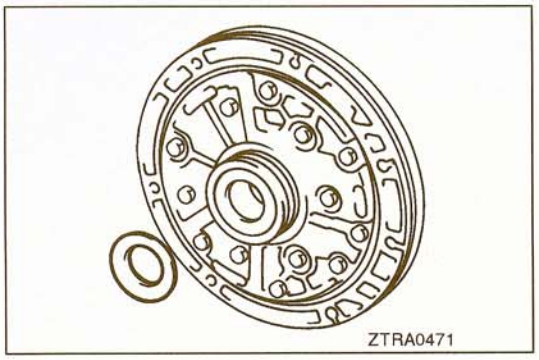


(31) Remove the race from the rear side of the oil pump.

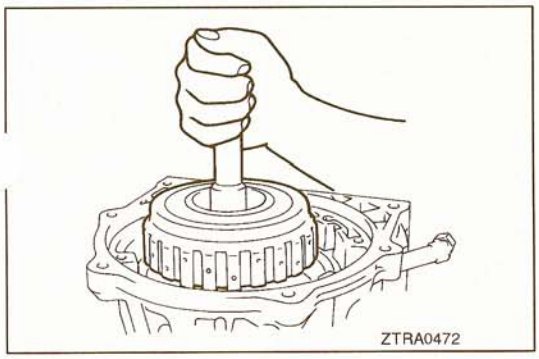


(32) Holding the input shaft by hand, remove the overdrive planetary gear assembly and overdrive direct clutch assembly.

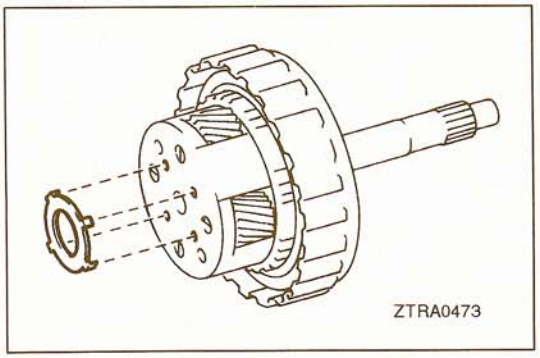


(33) Remove the race from the rear side of the overdrive planetary gear.

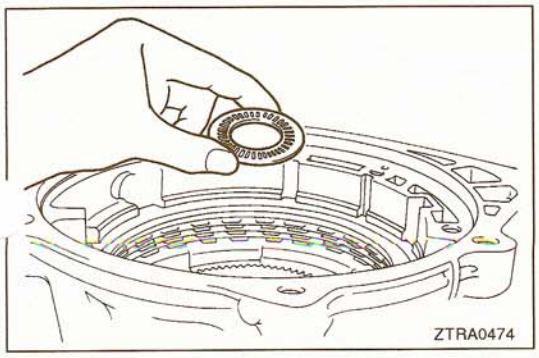


(34) Remove the bearing and race.

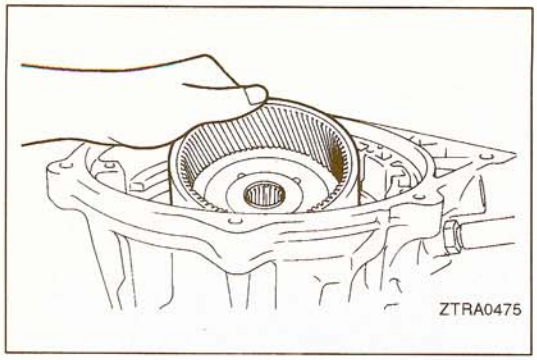


(35)Remove the overdrive planetary ring gear.

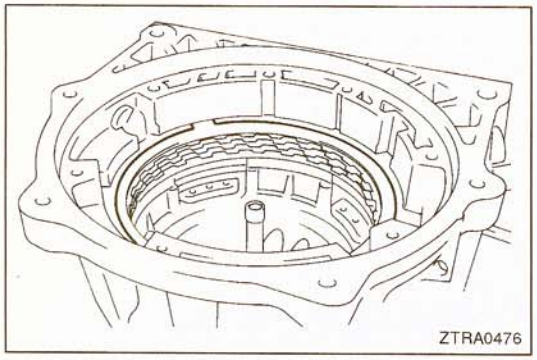


(36)Remove the snap ring.

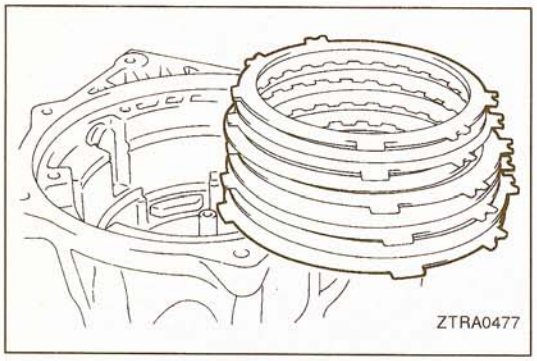


(37)Remove the two flanges, four discs and three plates of the overdrive brake.

NOTE
Remember the direction in which the brake flanges have been installed.

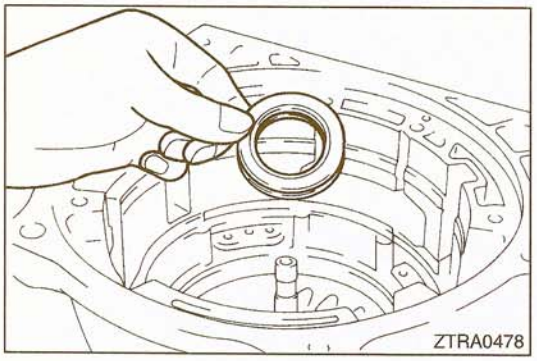


(38)Remove the race and bearing.

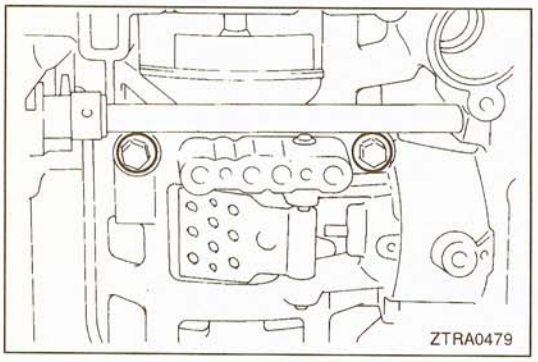


(39)Remove the two bolts attaching the overdrive support.

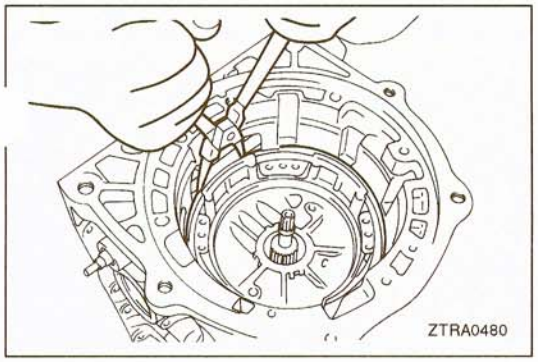


(40) Remove the snap ring.

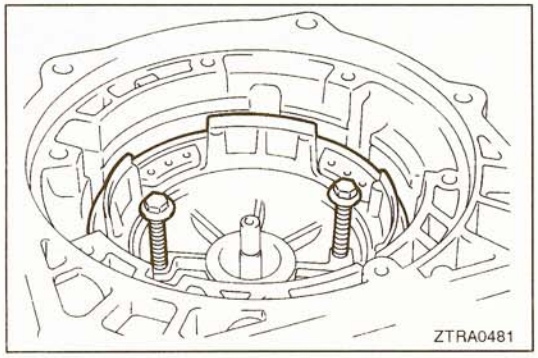


(41) Remove the overdrive support assembly by making use of the two overdrive support mounting bolts.

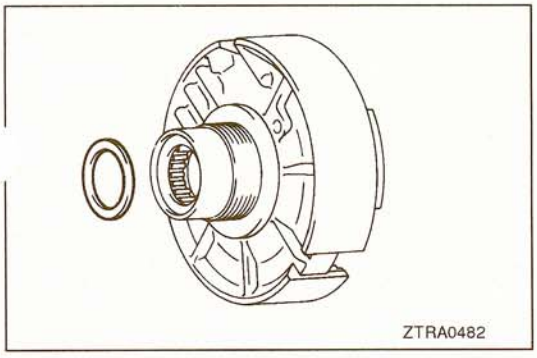


(42) Remove the race from the rear side of the overdrive support assembly.

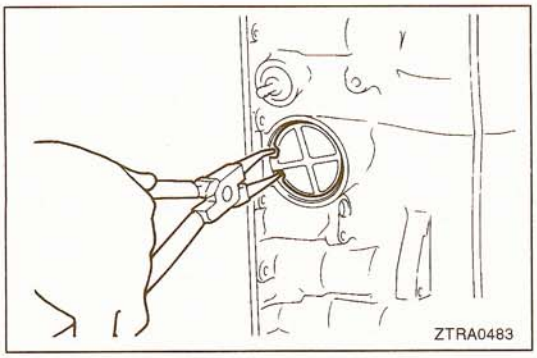


(43) Remove the snap ring from the second coast brake piston.

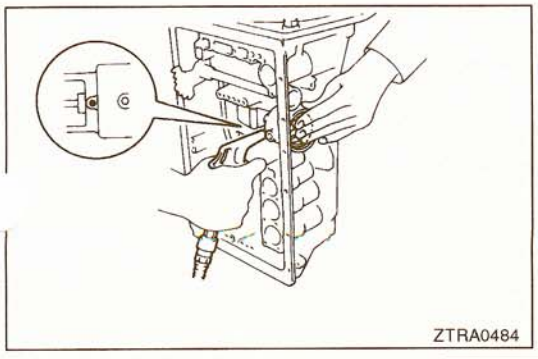


(44) Remove the second coast brake cover, piston assembly and spring by blowing air slowly from the illustrated oil hole.

**Caution**
**Use a shop towel, etc. to prevent the cover and fluid from popping and gushing out.**

(45) Remove the two O-rings from the piston cover.

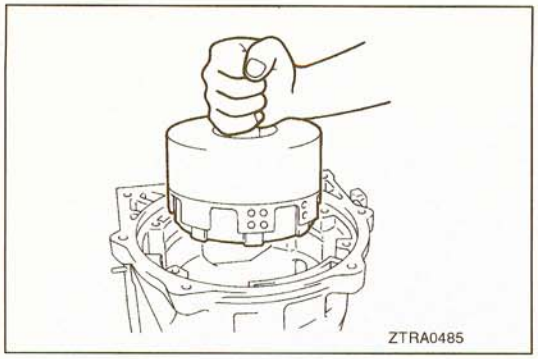


(46)Holding the input shaft of the forward clutch, remove the forward clutch assembly and direct clutch assembly.

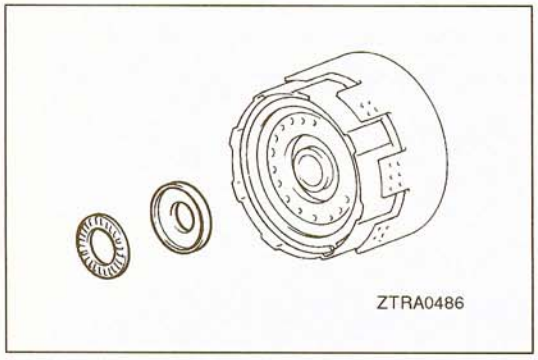


(47)Remove the race and bearing from the rear side of the forward clutch assembly.

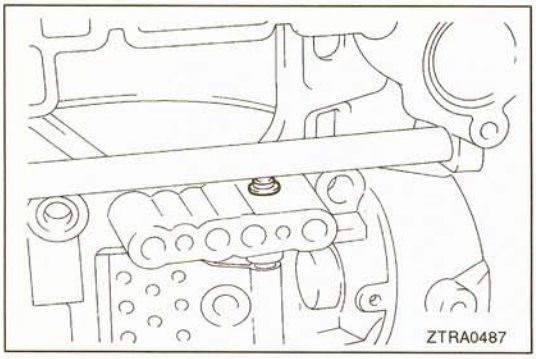


(48)Push the E-ring out of position and pull out the pin downward. Then remove the second coast brake band.
(49)Remove the E-ring from the pin.

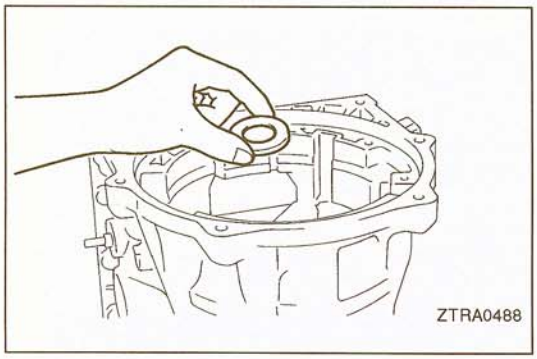


(50)Remove the race.

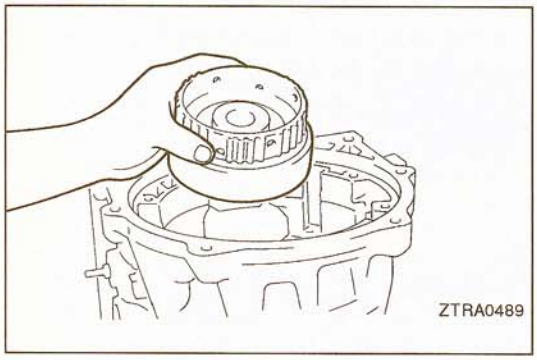


(51)Remove the front planetary ring gear.

**TSB Revision**

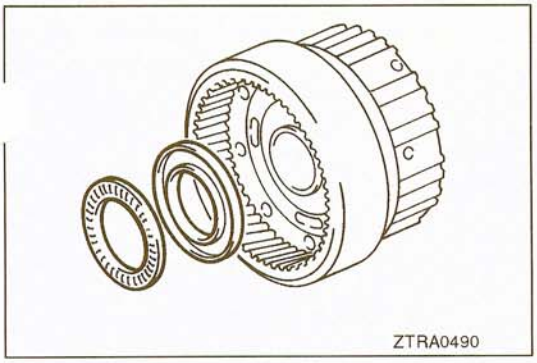


(52) Remove the race and bearing from the rear side of the front planetary ring gear.

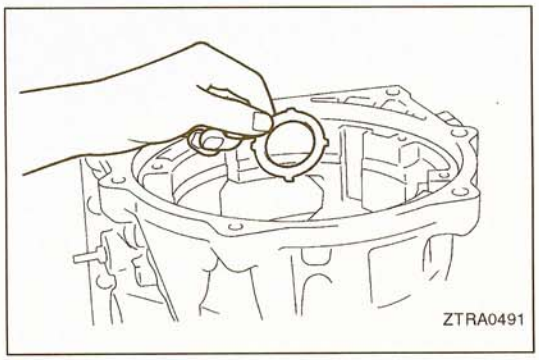


(53) Remove the race.

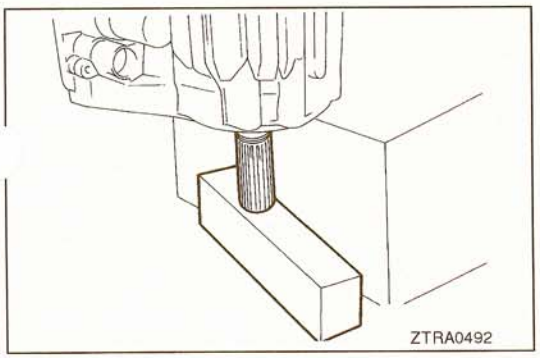


(54) Use wood pieces or the like so as to push the output shaft a little toward the front side.

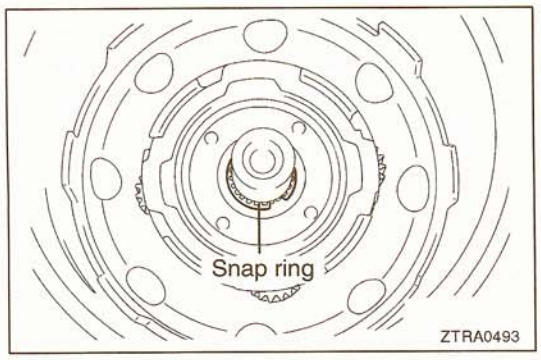


(55) Remove the snap ring.

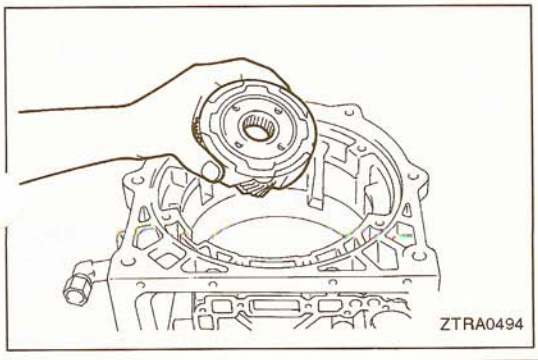


(56) Remove the front planetary gear assembly.
(57) Remove the bearing.

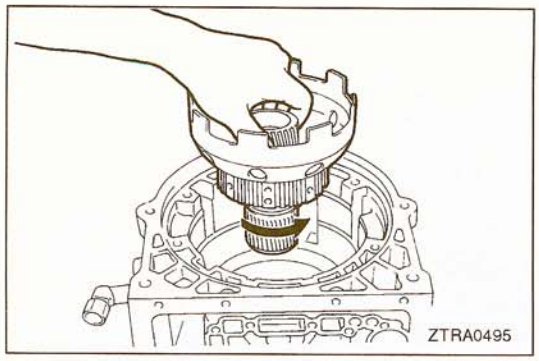


(58) Rotate the sun gear input drum counterclockwise to remove it together with the one-way clutch assembly.

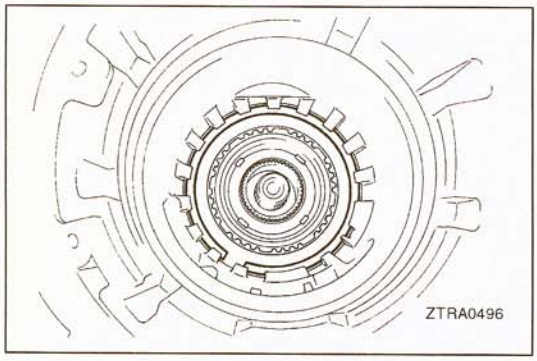


(59) Remove the snap ring.

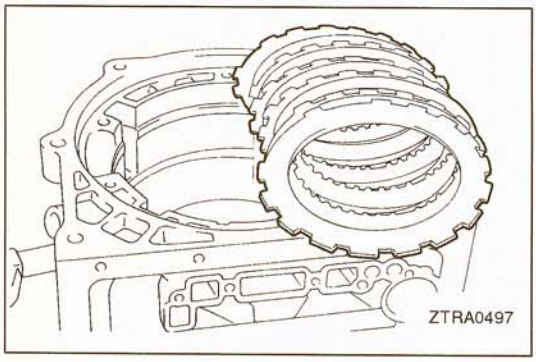


(60) Remove the flange, five discs and five plates of the flange.

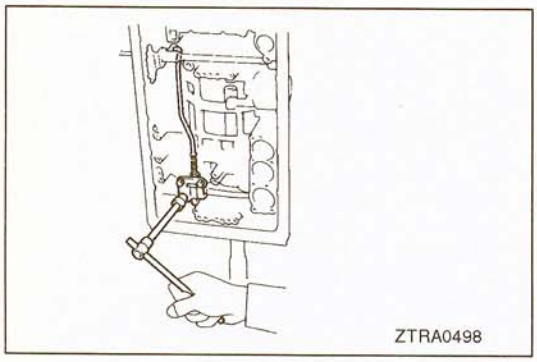


(61) Remove the three bolts and then remove the parking lock pawl bracket.

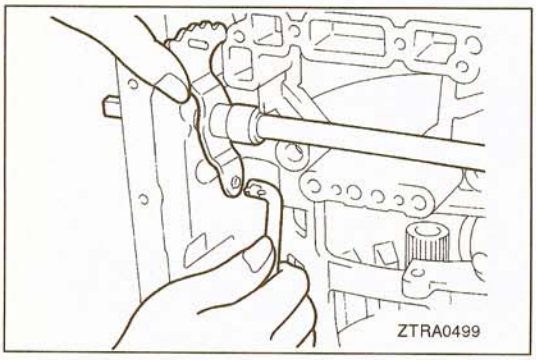


(62) Remove the parking lock rod from the manual valve lever.

TSB Revision

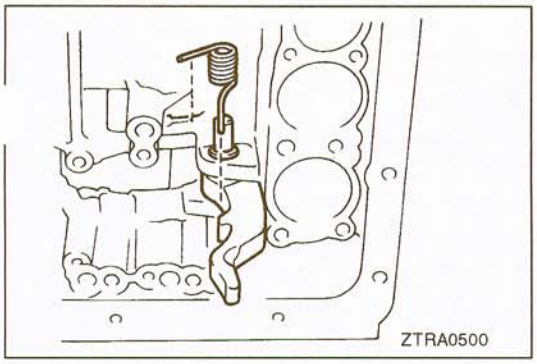


(63) Remove the spring, parking lock pawl shaft and pawl.
(64) Remove the E-ring from the parking lock pawl shaft.

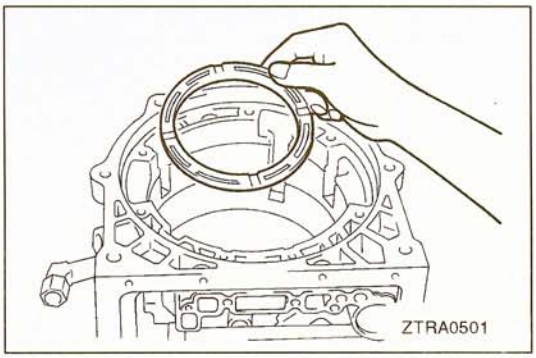


(65) Remove the second brake piston sleeve.

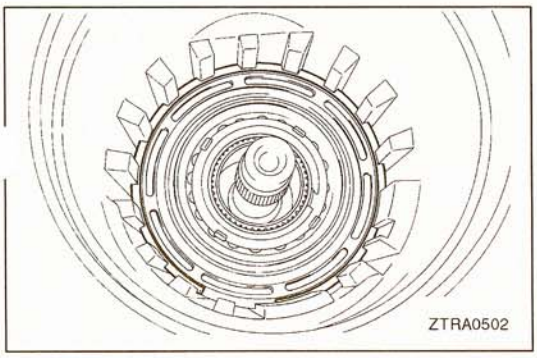


(66) Remove the snap ring.

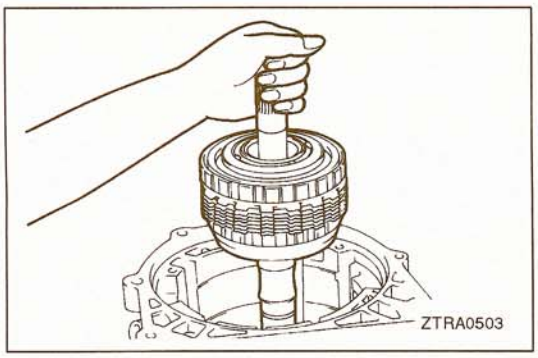


(67) Remove the output shaft, second brake drum sub-assembly and rear planetary gear assembly together.

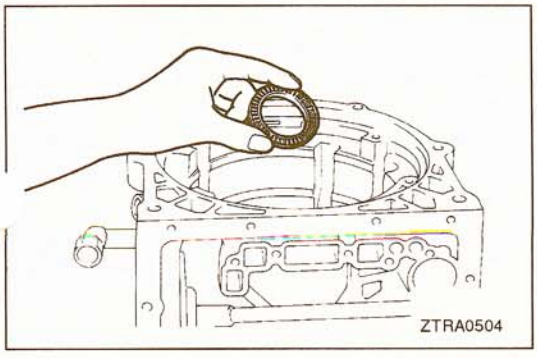


(68) Remove the bearing with the attached race from the transmission case.

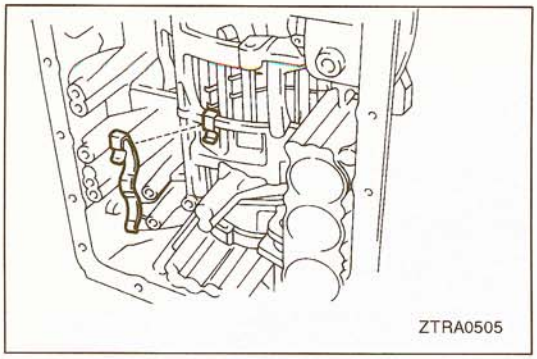


(69)Remove the leaf spring from the transmission case.

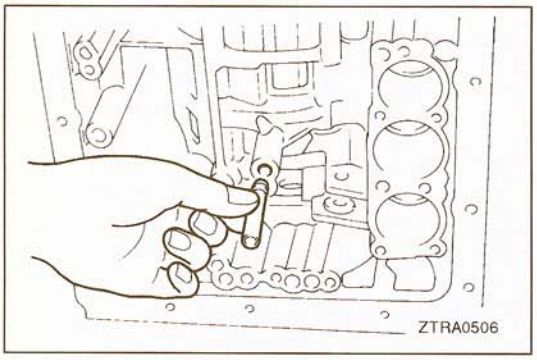


(70)Remove the brake drum gasket.

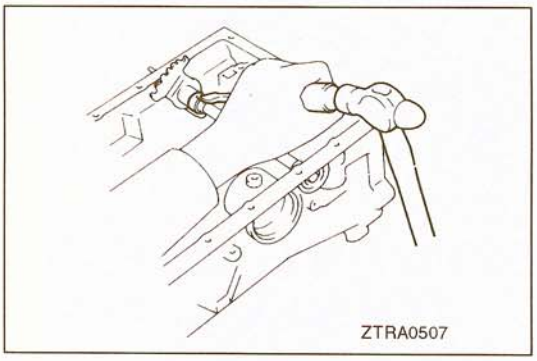


(71)Using a screwdriver, etc., unstake the spacer.

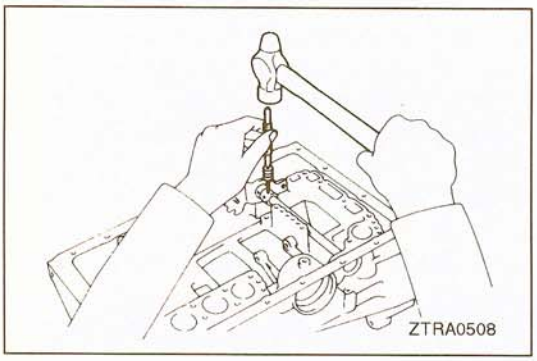


(72)Using a pin punch, drive out the slotted spring pin.
(73)Pull out the manual valve lever shaft and remove the manual valve lever.
(74)Remove the spacer from the manual valve lever.

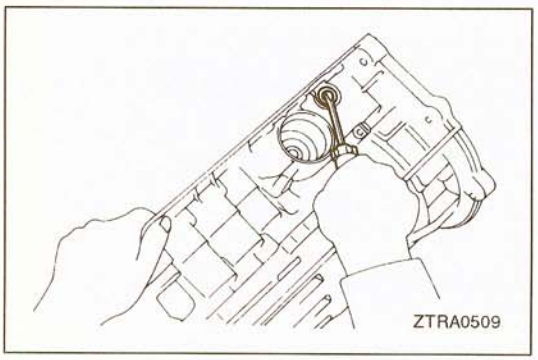


(75)Remove the two oil seals from the manual valve lever shaft.

**TSB Revision**

## REASSEMBLY

**Caution**

1. **The automatic transmission is composed of component parts of an especially high degree of precision. During reassembly, therefore, handle these component parts very carefully so as not to scar or scratch them.**
   **Damage may cause fluid leakage and degeneration in performance. Check each part carefully before installation.**
2. **Clean all parts thoroughly before reassembly. Metal parts may be cleaned with ordinary detergents, but must be thoroughly air-dried.**
3. **Clean the clutch discs, brake discs, resin thrust plates and rubber parts by using ATF (automatic transmission fluid), being very careful that dust, dirt, etc. do not adhere to them.**
4. **Do not reuse gaskets, oil seals, or other rubber parts. Be sure to replace them with new ones.**
5. **Do not use grease other than petrolatum jelly.**
6. **Apply ATF to friction components, rotating parts, and sliding parts before installation.**
7. **Dip the new clutch discs and brake discs in ATF for at least two hours before installation.**
8. **Do not apply sealer or adhesive to gaskets.**
9. **When a bushing must be replaced, replace the assembly in which it is incorporated.**
10. **Tighten each component to the specified torque.**

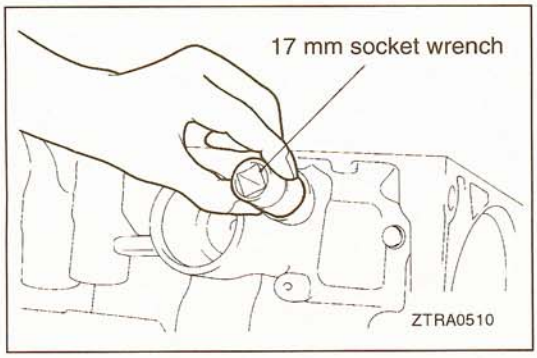


(1) Using an appropriate socket wrench, etc., drive in the two oil seals until they are flush with the end face of the transmission case.

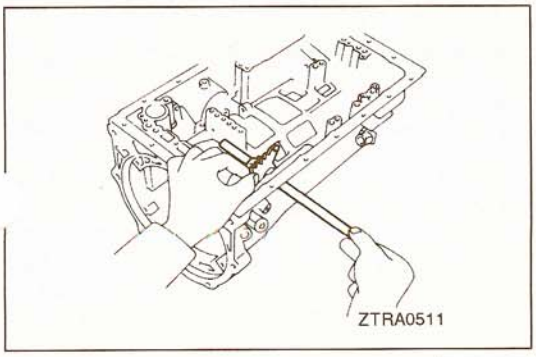


(2) Install a new spacer to the manual valve lever.
(3) Install the manual valve lever and shaft in the transmission case.

**TSB Revision**

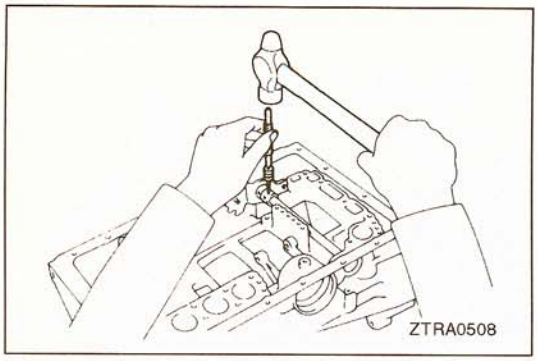


(4) Align the hole in the manual valve lever with that in the shaft and drive in a new slotted spring pin to fix them.

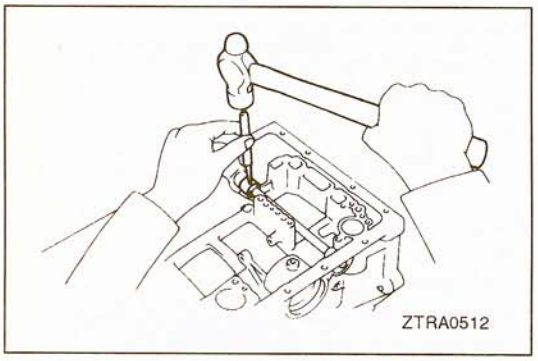


(5) Align the indentation in the manual valve lever with the spacer hole and stake it firmly using a punch.
(6) Check that the manual valve lever shaft rotates smoothly.
(7) Place wood pieces (used in disassembly) below the transmission case to prevent the output shaft from dropping.

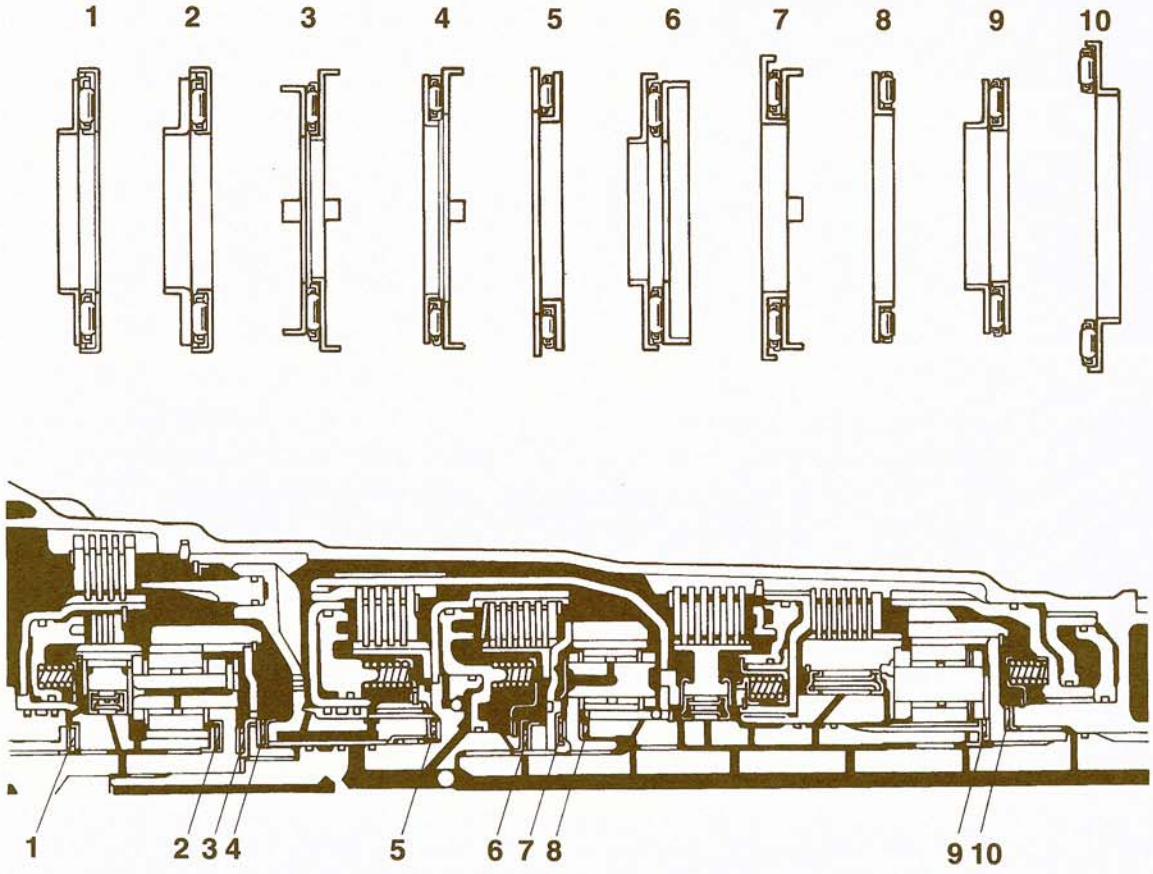


ZTRA0513

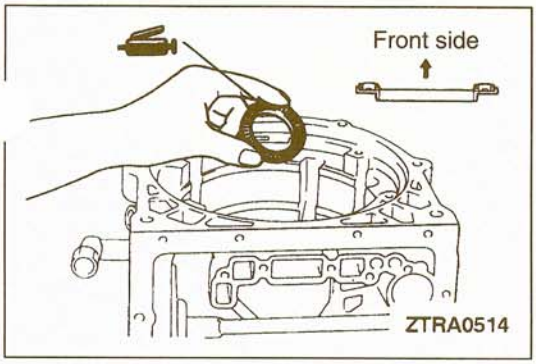


(8) Apply petrolatum to the bearing with race [57.7mm (2.272 in.) in outer diameter and 39.2 mm (1.543 in.) in inner diameter] and attach it in the transmission case.

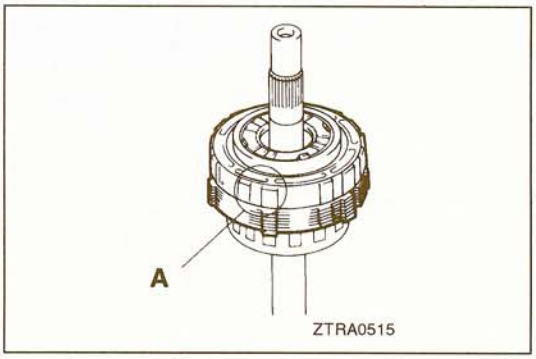


(9) As illustrated, align the lugs of the flange, disc, plate and second brake drum.

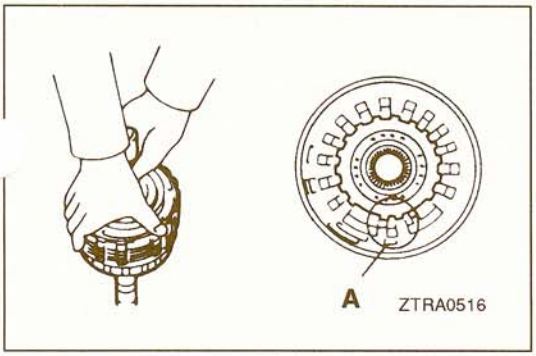


(10) Align the portion A illustrated in step (9) with the portion A of the transmission case. Install the output shaft, second brake drum sub assembly and rear planetary gear assembly together.

NOTE
While holding the input shaft, push the second brake drum.

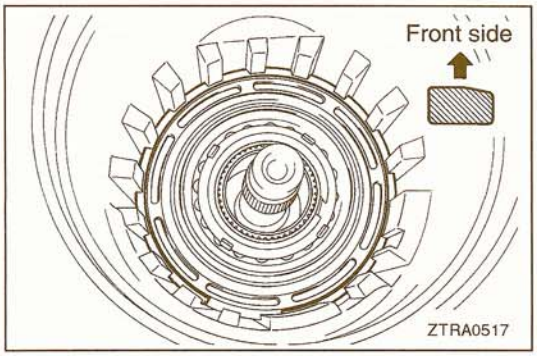


(11) Install the snap ring along the groove.

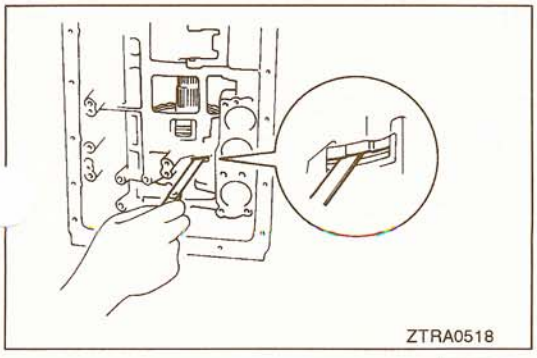


(12) Check the clearance between the second brake drum and the plate inserting a feeler gauge from the service hole on the valve body side.

**Standard value: 0.70–1.22 mm (.0275–.0480 in.)**

If the clearance is not within this range, the second brake drum may have not be installed properly. In this case, reinstall it and check the clearance again.

**TSB Revision**

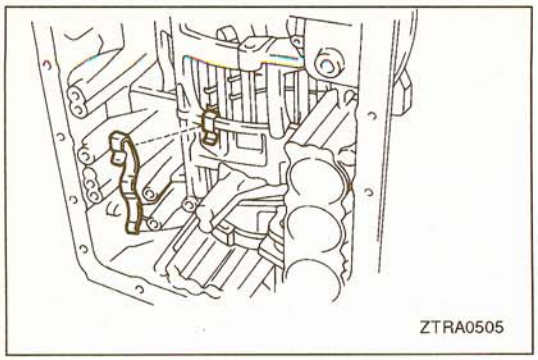


(13)Install the leaf spring.

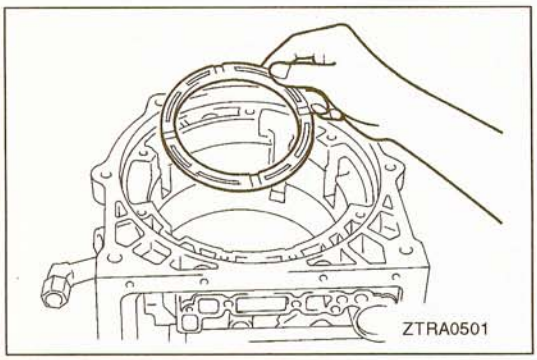


(14)With the indented side of the second brake piston sleeve up, install it firmly.
(15)Check that the thrust washer No.2 is installed on the second brake drum.

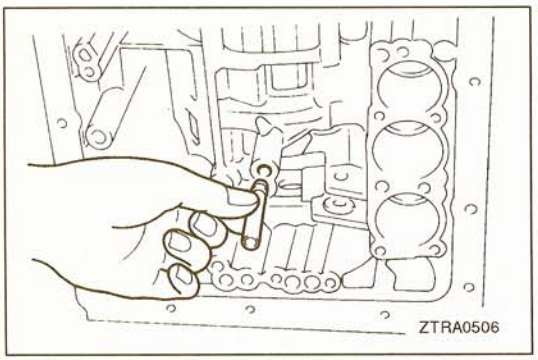


(16)Apply ATF to the new brake drum gasket and install it from the valve body side.

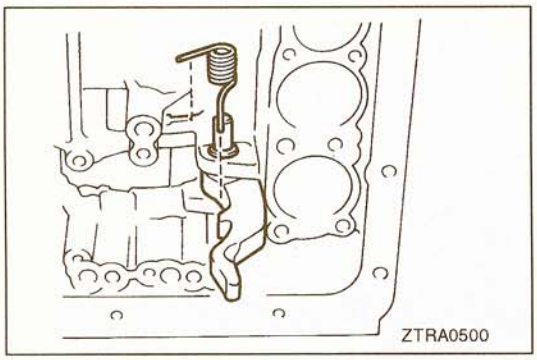


(17)Install the E-ring to the parking lock pawl shaft.
(18)Install the parking lock pawl, shaft and spring.

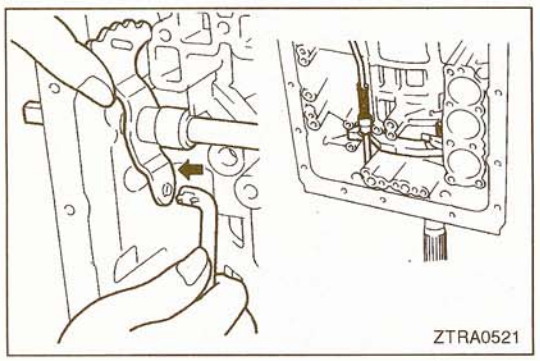


(19)Install the parking lock rod to the manual valve lever and place it on the lock pawl.
(20)With three bolts, install the parking lock pawl bracket.

**TSB Revision**

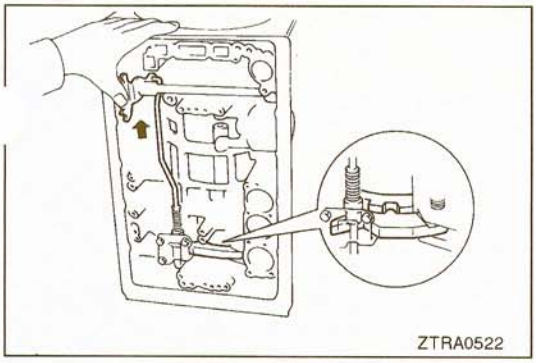


(21) By shifting the manual valve lever toward the P range, check that the lock pawl locks the planetary ring gear.

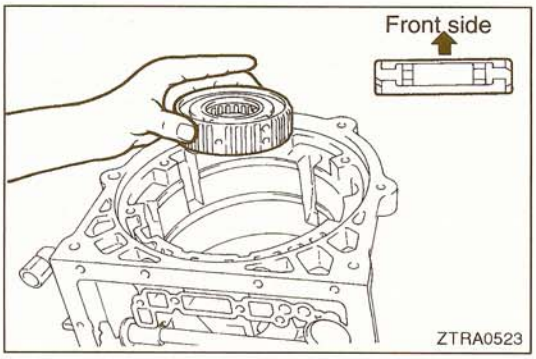


(22) Install the one-way clutch assembly in the illustrated direction.

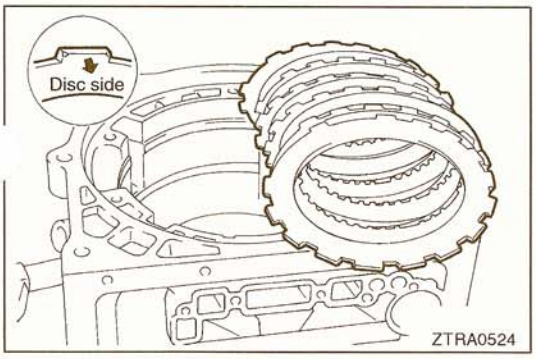


(23) Install the 1.8 mm (.070 in.) plate and then install the five discs and four 2.5 mm (.098 in.) plates alternately.
(24) Install the brake flange.

NOTE
The 1.8 mm (.070 in.) plate and the brake flange must be installed in such a way that their chamfers face the disc side.

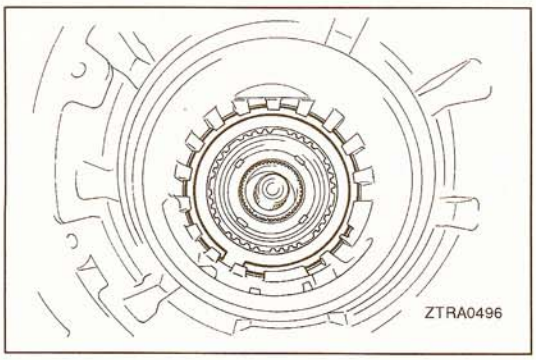


(25) Install the snap ring.

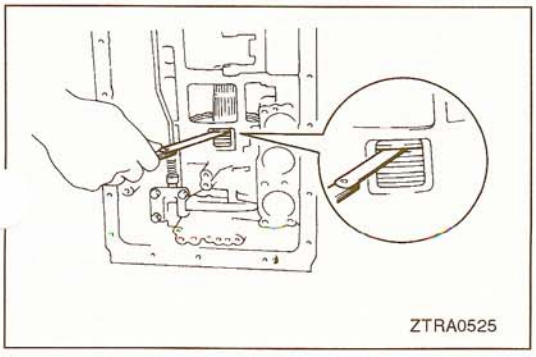


(26) Check the clearance between the snap ring and flange by inserting a feeler gauge from the service hole on the valve body side.

**Standard value: 0.62–1.98 mm (.0244–.0779 in.)**

If the clearance is not within this range, an improper installation is suspected. In this case, reassemble and check the clearance again.

**TSB Revision**

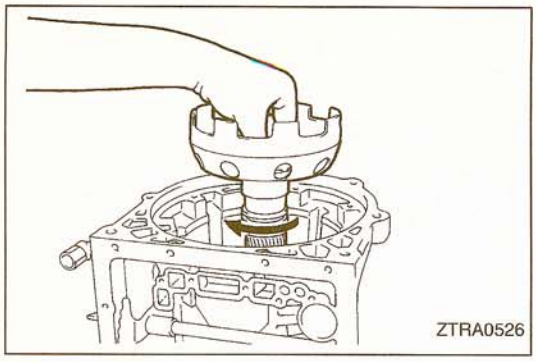


(27) Check that the one-way clutch No.1 washer is installed to the sun gear input drum. Push in the sun gear input drum fully while rotating it clockwise.

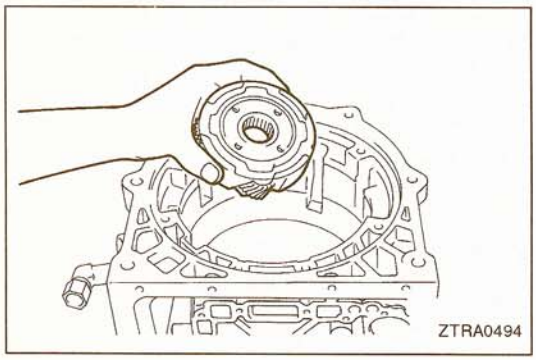


(28) Check that the race and bearing are installed to the rear side of the front planetary gear. Install the planetary gear assembly to the sun gear.

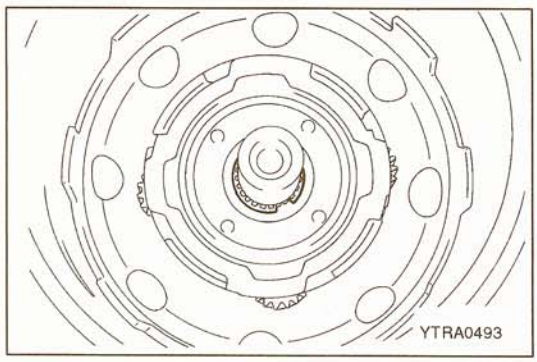


(29) While pushing the output shaft to the front side, install a new snap ring [23.7 mm (.933 in.) in inner diameter] to the output shaft.

**Caution**
**Do not open the snap ring more than necessary.**

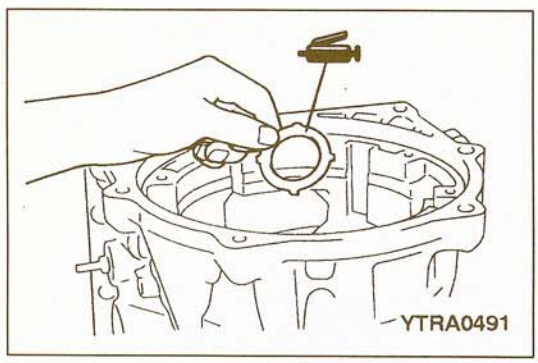


(30) Apply petrolatum to the race [47.8 mm (1.882 in.) in outer diameter and 34.3 mm (1.350 in.) in inner diameter]. Aligning its four lugs with the holes in the planetary gear assembly, install it thereon.

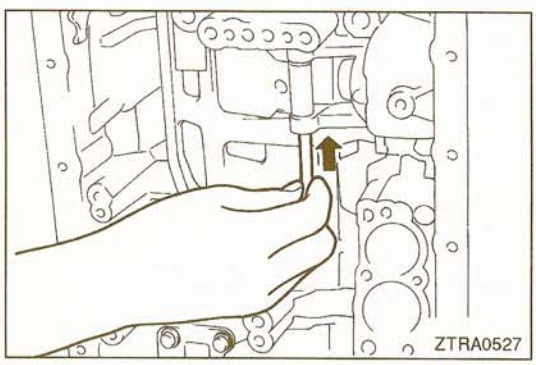


(31) Insert the second coast brake band in the transmission case.
(32) Attach a new E-ring to one side of the pin and install it through the second coast brake band.

**TSB Revision**

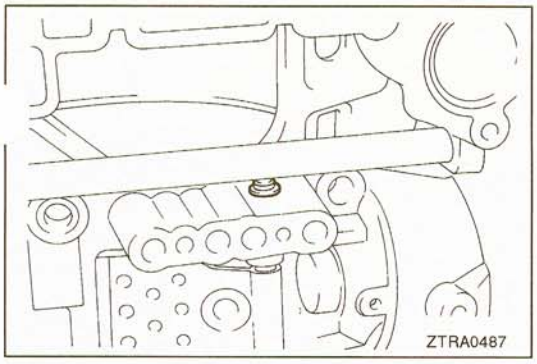


(33) Attach a new E-ring to the upper side of the pin.

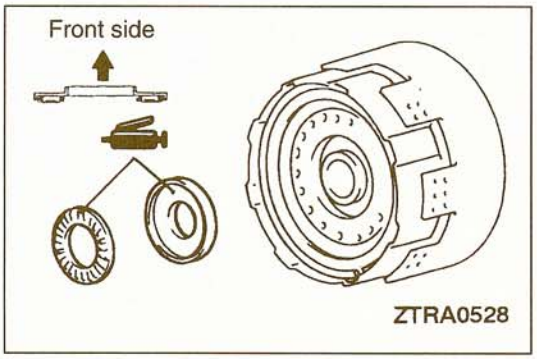


(34) Apply petrolatum to the front side race [48.9 mm (1.925 in.) in outer diameter and 26.0 mm (1.024 in.) in inner diameter] and bearing [46.7 mm (1.839 in.) in outer diameter and 26.0 mm (1.024 in.) in inner diameter] and install them to the rear side of the forward clutch.

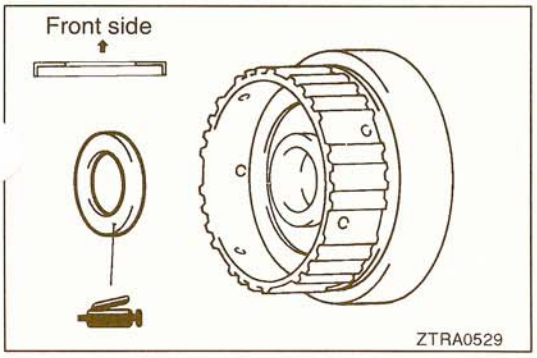


(35) Apply petrolatum to the rear side race [47.0 mm (1.850 in.) in outer diameter and 26.8 mm (1.055 in.) in inner diameter] and install it to the front side of the front planetary ring gear.

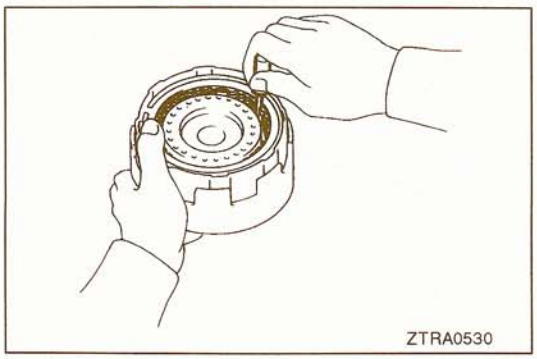


(36) Using a screwdriver, align the forward clutch disc lugs.

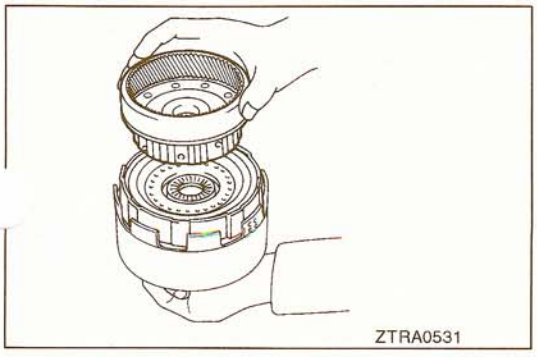


(37) Install the front planetary ring gear to the forward clutch assembly by lightly pushing and rotating it.

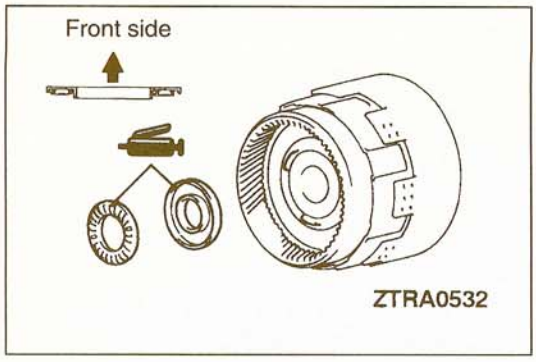


(38) Apply petrolatum to the race [53.6 mm (2.110 in.) in outer diameter and 30.6 mm (1.205 in.) in inner diameter] and bearing [47.4 mm (1.866 in.) in outer diameter and 32.6 mm (1.283 in.) in inner diameter] and install them to th ring gear.

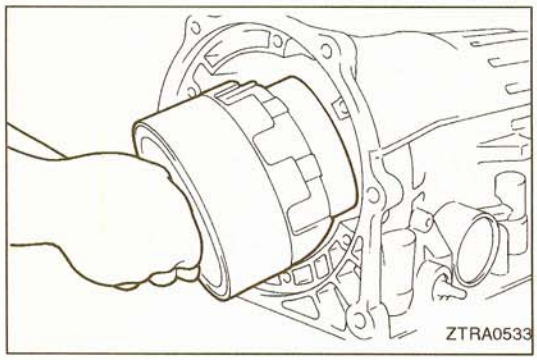


(39) Install the direct clutch assembly, forward clutch assembly and ring gear together in the transmission case.

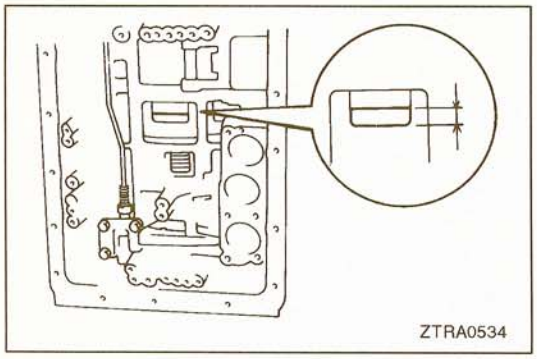


(40) Using a caliper, check the clearance between the sun gear input drum and the lug edge of the direct clutch drum.

**Reference value: 5.3–7.3 mm (.209–.287 in.)**

If the clearance is not within this range, the direct clutch, forward clutch and ring gear may have not be installed properly. In this case, reinstall them and check the clearance again.

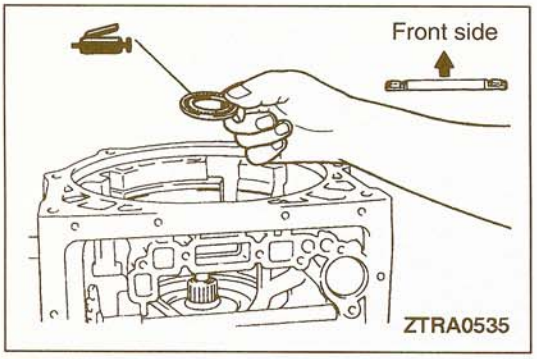


(41) Apply petrolatum to the bearing with race [47.6 mm (1.874 in.) in outer diameter and 33.7 mm (1.327 in.) in inner diameter] and slide it over the input shaft of the forward clutch.

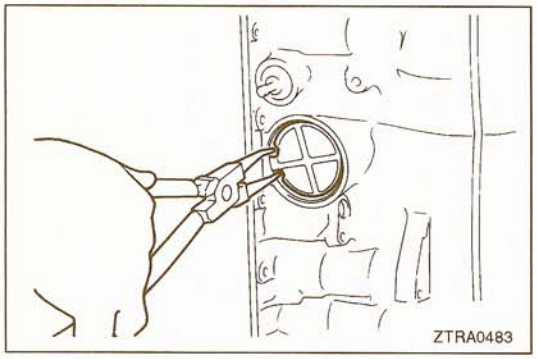


(42) Apply ATF to two new O-rings and attach them to the piston cover.
(43) Install the spring, piston assembly and piston cover.
(44) Install the snap ring.

**TSB Revision**

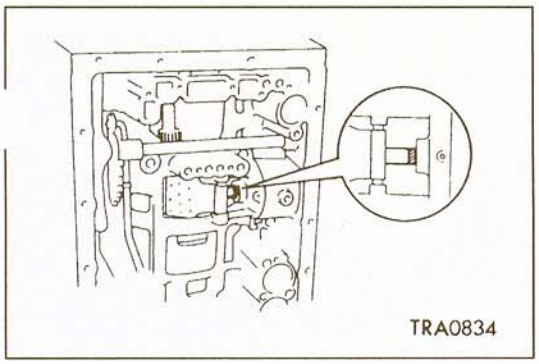


(45)Apply minium on the second coast brake piston rod.

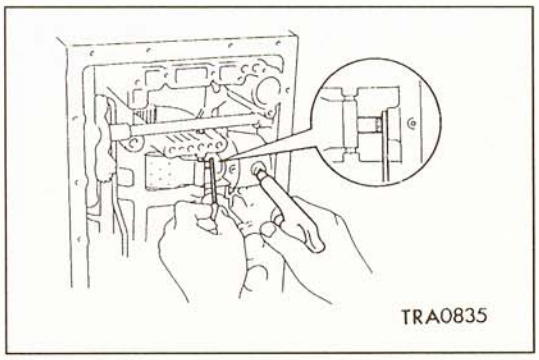


(46)Apply air pressure (400–800 kPa, 56–113 psi) to the oil hole shown in the illustration, and measure the stroke of the second coast brake piston using wire gauges.

**Standard value: 1.5–3.0 mm (.059–.118 in.)**

NOTE
Measure the stroke several times and take an average.

(47)If the stroke is out of specification, reinstall the piston and measure the piston stroke again.

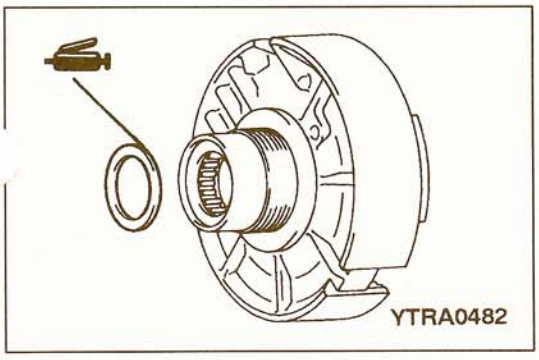


(48)Check that the clutch drum thrust washer is attached to the rear side of the overdrive support.

(49)Apply petrolatum to the race [50.9 mm (2.00 in.) in outer diameter and 36.8 mm (1.449 in.) in inner diameter] and attach it to the rear side of the overdrive support.

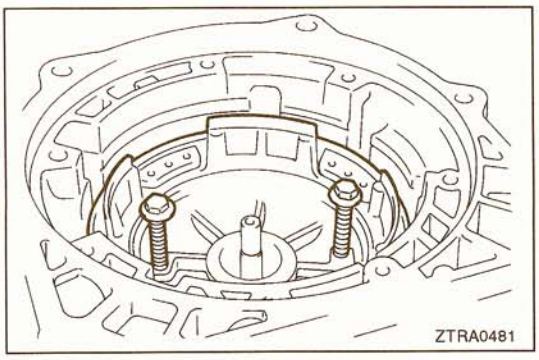


(50)While aligning the oil hole and bolt hole of the overdrive support with the bolt holes in the the transmission case using the two overdrive support attaching bolts, insert the overdrive support in the transmission case toward the valve body side.

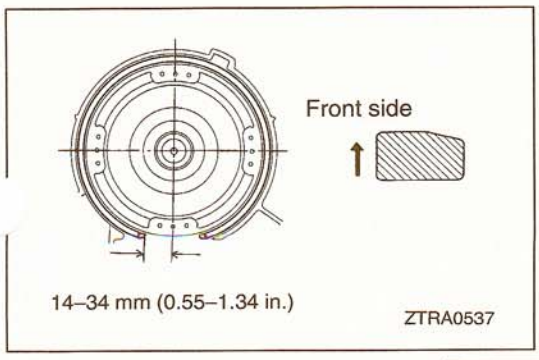


(51)Install the snap ring as illustrated.

**Standard value: 14–34 mm (.55–1.34 in.)**

**TSB Revision**

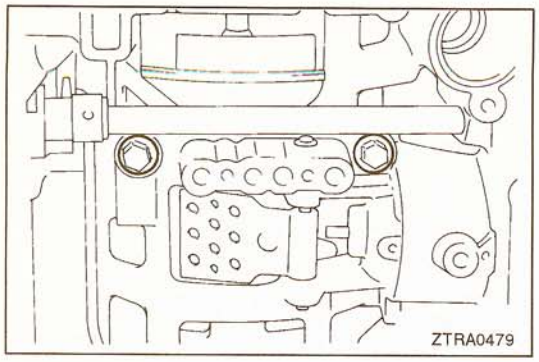


(52) Alternately tighten the two overdrive support attaching bolts uniformly and little by little.

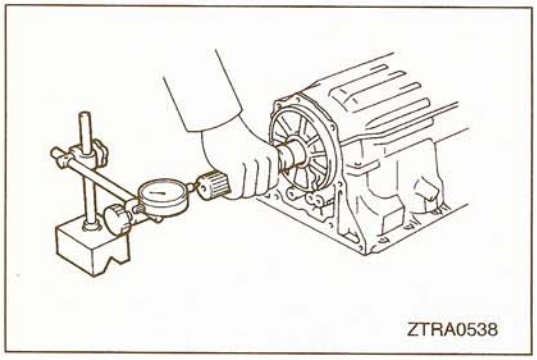


(53) Apply a dial gauge to the end of the output shaft and check its end play.

**Standard value: 0.27–0.86 mm (.0106–.0339 in.)**

(54) Check that the output shaft rotates smoothly.

NOTE
Check that the output shaft is not in the parking state.

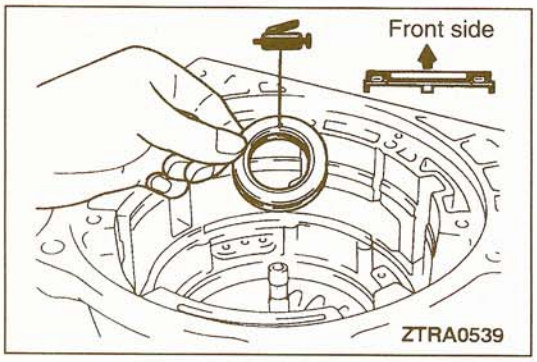


(55) Apply petrolatum to the races [58.8 mm (2.315 in.) in outer diameter and 37.2 mm (1.465 in.) in inner diameter] and bearing [51.1 mm (2.012 in.) in outer diameter and 33.7 mm (1.327 in.) in inner diameter]. Aligning the four bearing lugs with the overdrive support notches, attac' the bearing and then the races to the overdrive suppor.

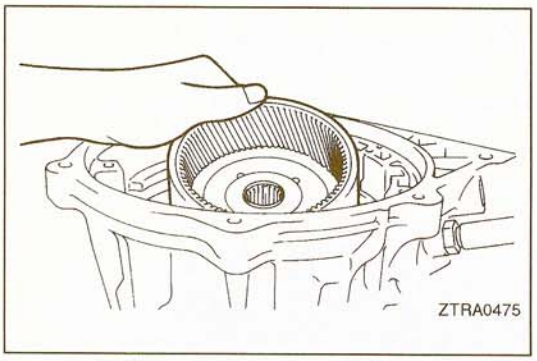


(56) Install the overdrive planetary ring gear.

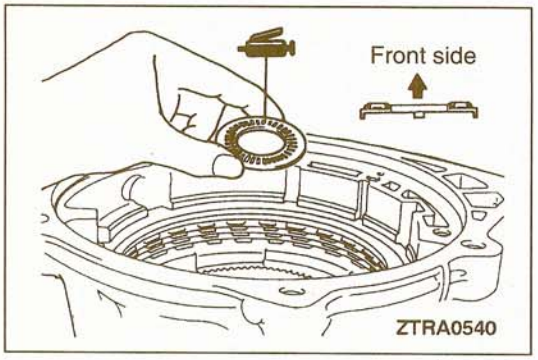


(57) Apply petrolatum to the race [47.8 mm (1.882 in.) in outer diameter and 24.2 mm (.953 in.) in inner diameter] and bearing [46.8 mm (1.843 in.) in outer diameter and 26.0 mm (1.024 in.) in inner diameter]. Aligning the four bearing lugs with the holes of the ring gear, attach the race and bearing to the gear.

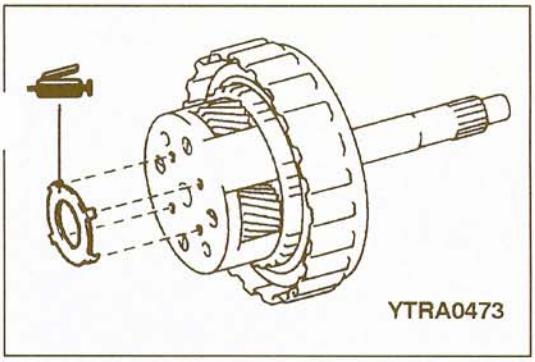


(58) Apply petrolatum to the race [41.8 mm (1.646 in.) in outer diameter and 27.3 mm (1.075 in.) in inner diameter]. Aligning the four race lugs with the holes of the overdrive planetary gear, attach it to the gear.

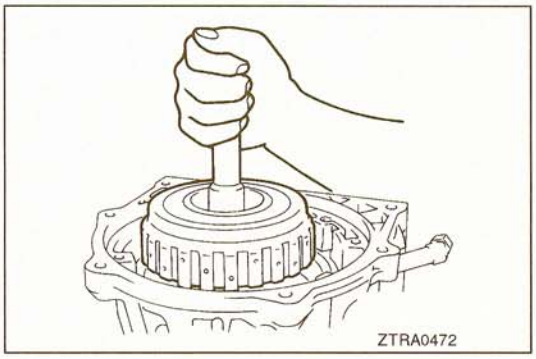


(59) Holding the input shaft, install the overdrive planetary gear assembly and overdrive direct clutch assembly together.

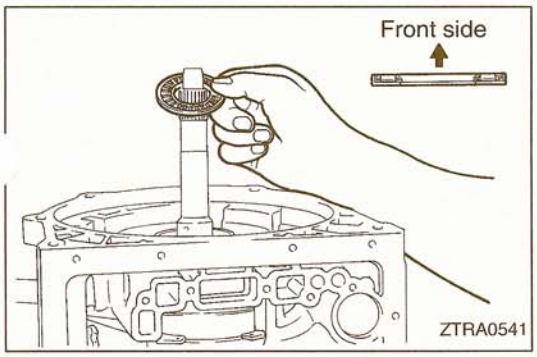


(60) Install the race with bearing [50.2 mm (1.976 in.) in outer diameter and 28.9 mm (1.138 in.) in inner diameter] through the input shaft.

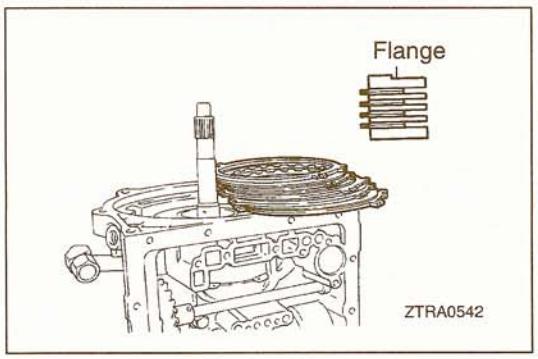


(61) Install one 4.0 mm (.157 in.) thickness flange in such a way that its chamfer faces the disc side. Install the four discs and three plates alternately. Install the other flange in the illustrated direction.

**Caution**
**When the 4.0 mm (.157 in.) flange is used also on the front side, its chamfer must also face the disc side.**

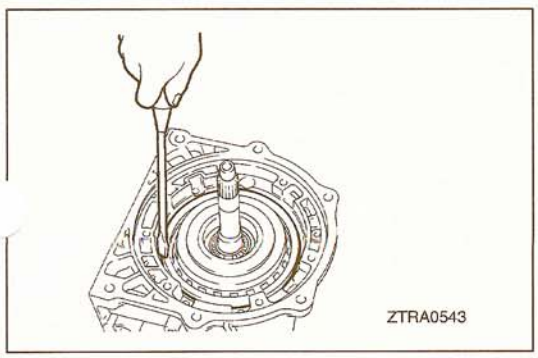


(62) Install the snap ring.

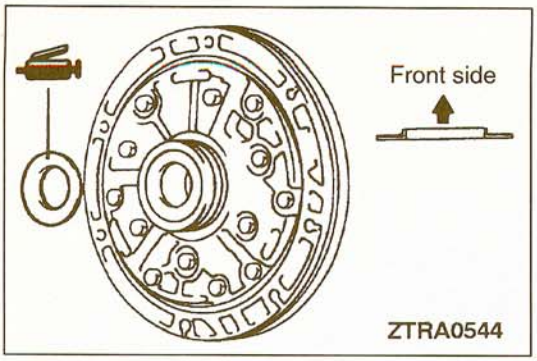


(63) Apply petrolatum to the race [47.3 mm (1.862 in.) in outer diameter and 28.1 mm (1.106 in.) in inner diameter] and attach it to the rear side of the oil pump.

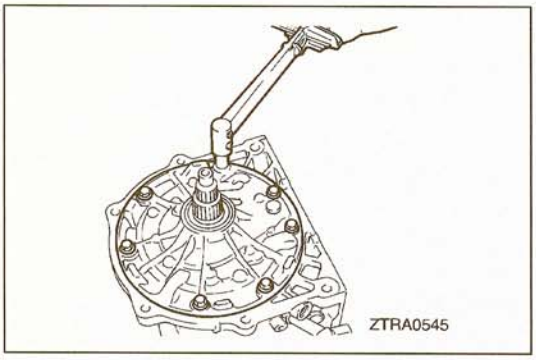


(64) Align the bolt holes in the oil pump with those in the transmission case.
(65) Install the oil pump by hitting at its upper face lightly and uniformly with a plastic hammer. Then, fix it by tightening the seven bolts uniformly and little by little.

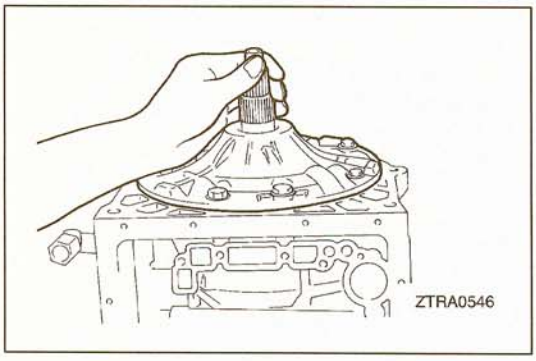


(66) Check that the input shaft rotates smoothly.

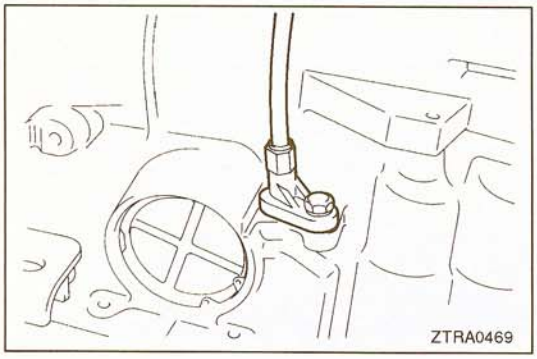


(67) Apply ATF to a new O-ring and attach it to the throttle cable.
(68) Install the throttle cable to the transmission case.

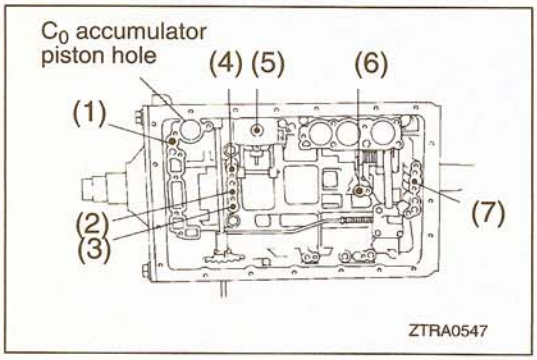


(69) Blow air in each illustrated oil hole to check for operation noise.
(1) Overdrive direct clutch
(2) Direct clutch
(3) Forward clutch
(4) Overdrive brake
(5) Second coast brake
(6) Second brake
(7) First & reverse brake

**Caution**
**When checking the overdrive direct clutch, close the $C_0$ accumulator piston hole.**

If no operation noise is recognized, disassemble the structure and check if each part is installed properly.

**TSB Revision**

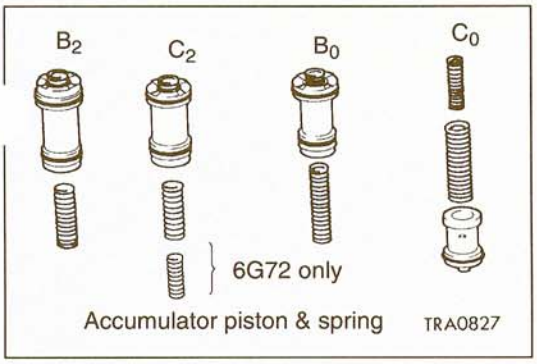


(70)Apply ATF to the new O-rings.
(71)Install the spring, accumulator piston.

### Accumulator piston

mm (in.)

| Place | Outer diameter | Length |
|---|---|---|
| $B_2$ | 36.9 (1.453) | 62.5 (2.461) |
| $C_2$ | 36.9 (1.453) | 56.6 (2.228) |
| $B_0$ | 31.9 (1.256) | 52.0 (2.047) |
| $C_0$ | 29.9 (1.177) | 44.0 (1.732) |

[Reference]
Each piston has an identification code ($B_2$, $C_2$, $B_0$ or $C_0$), indicating the accumulator to which it is to be installed.

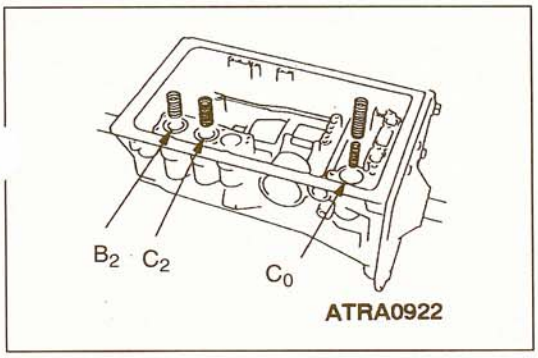


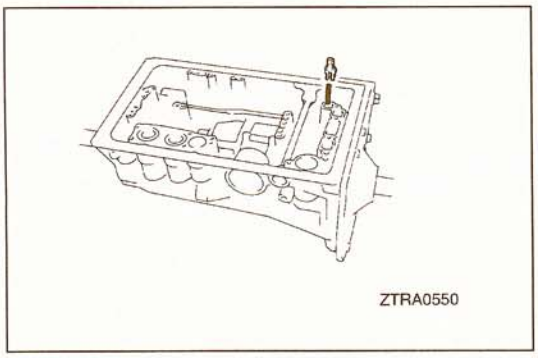


### Spring

mm (in.)

| Place | | Free height | Outside diameter | Number of loops | Wire diameter |
|---|---|---|---|---|---|
| $C_0$ | Outer spring 1 | 74.6 (2.937) | 20.9 (.823) | 12.3 | 2.3 (.091) |
| | Outer spring 2 | 46.0 (1.811) | 14.0 (.551) | 12.5 | 2.2 (.087) |
| $C_2$ | Outer spring <6G72> | 24.0 (.945) | 12.0 (.472) | 5.4 | 1.7 (.067) |
| | Outer spring <6G74> | 20.0 (.787) | 12.1 (.476) | 8.5 | 1.7 (.067) |
| | Inner spring <6G74> | 70.2 (2.764) | 20.2 (.795) | 10.1 | 2.3 (.091) |
| | Inner spring 1 <6G72> | 64.0 (2.520) | 20.2 (.795) | 10.3 | 2.2 (.087) |
| | Inner spring 2 <6G72> | 42.1 (1.657) | 14.7 (.579) | 9.25 | 2.5 (.098) |
| $B_0$ | Outer spring | 14.5 (.571) | 13.0 (.512) | 3.0 | 2.1 (.083) |
| | Inner spring | 62.0 (2.441) | 16.0 (.630) | 11.9 | 2.1 (.083) |
| $B_2$ | Outer spring <6G72> | 23.0 (.906) | 14.0 (.551) | 4.9 | 2.0 (.079) |
| | Outer spring <6G74> | 22.0 (.866) | 14.0 (.551) | 5.2 | 1.9 (.075) |
| | Inner spring <6G72> | 70.5 (2.776) | 19.7 (.776) | 12.9 | 2.7 (.106) |
| | Inner spring <6G74> | 72.6 (2.858) | 19.9 (.783) | 12.5 | 2.8 (.110) |

**TSB Revision**

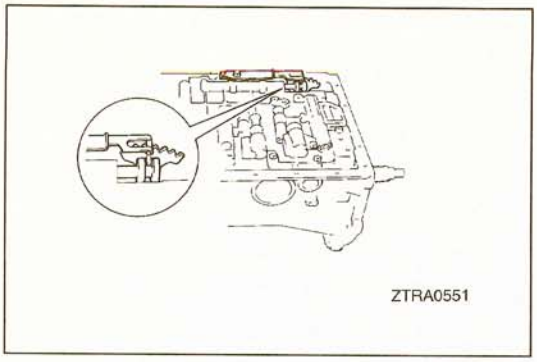


(72)Install the spring and check ball body.
(73)Align the groove of the manual valve with the pin of the manual valve lever.

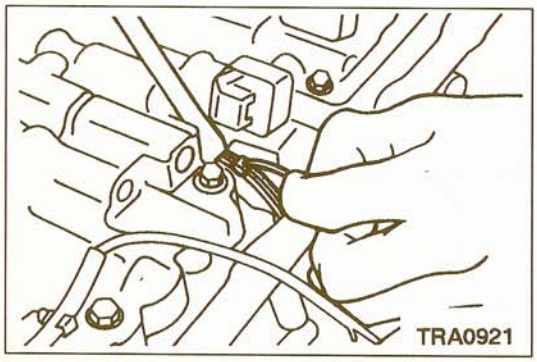


(74)Lifting up the valve body, install the throttle cable nipple to the throttle cam.
(75)Check that the spring and collar of the accumulator piston are installed on the valve body side.

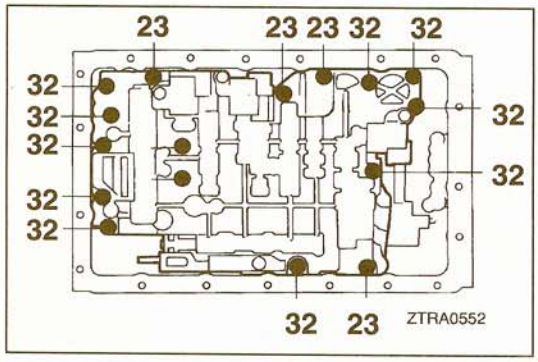


(76)Install the valve body by tightening the 16 bolts uniformly step by step. (The values in the illustration denote the shank length of each bolt.)

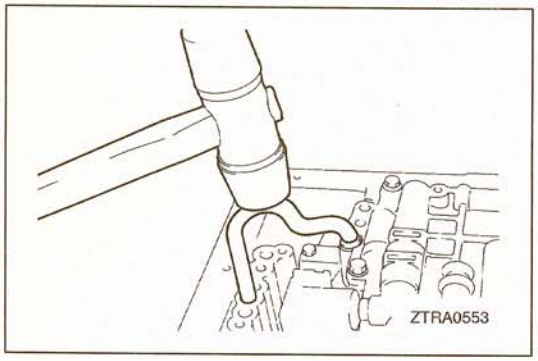


(77)Using a plastic hammer, install the brake tube.

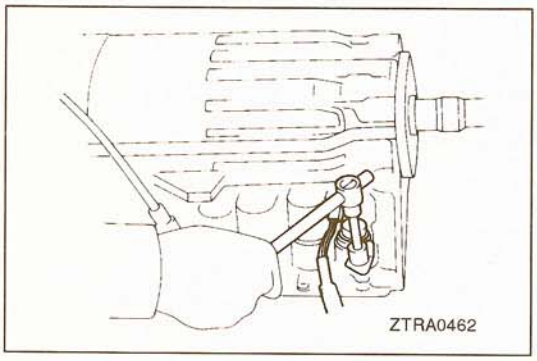


(78)Apply ATF to a new O-ring.
(79)Insert the transmission wire in the transmission case and secure it with the stopper plate.

TSB Revision

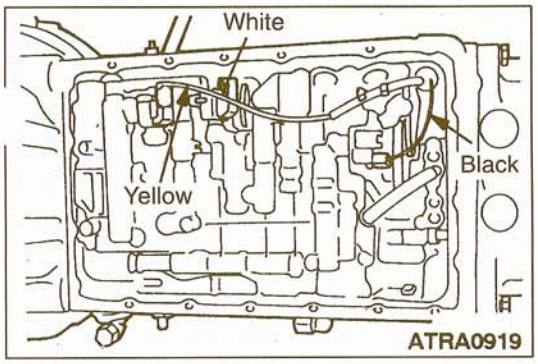


(80) Install the three connectors to the transmission solenoid.

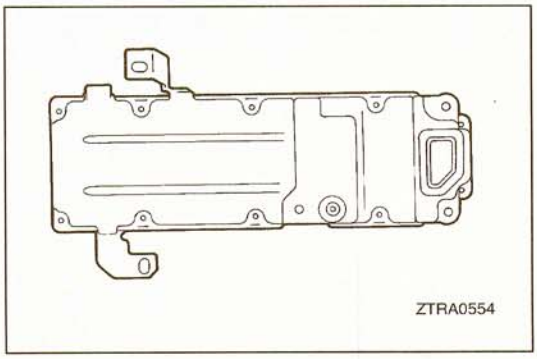


(81) With a scraper and wire brush and by air blow, clean the gasket mounting surface of the oil strainer.
(82) Attach the two new gaskets, one to the spacer and the other to the oil screen.

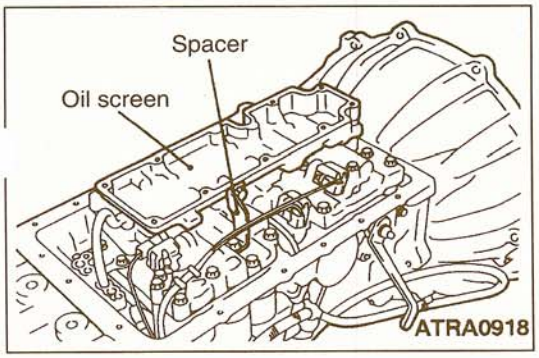


(83) Using five bolts, install the spacer and oil screen.

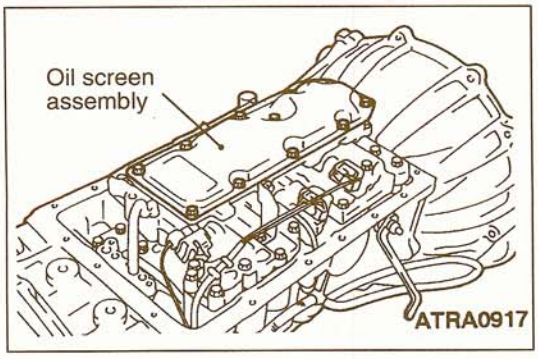


(84) After setting a new gasket, install the oil screen assembly using the 11 bolts.

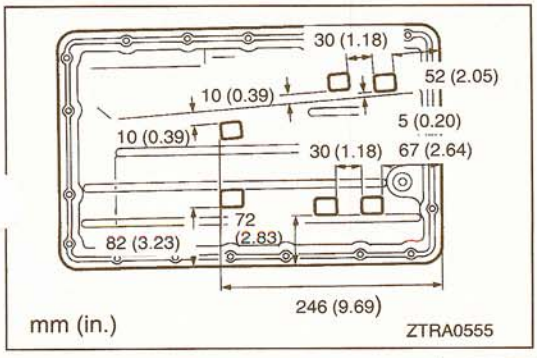


(85) Using a scraper and wire brush, remove sealer sticking on the transmission case and oil pan. Then, wash off oil with detergent.

**Caution**
**When cleaning and washing the transmission case, the valve body side must be kept down.**

(86) Wash the 6 magnets and attach them as illustrated.

**TSB Revision**

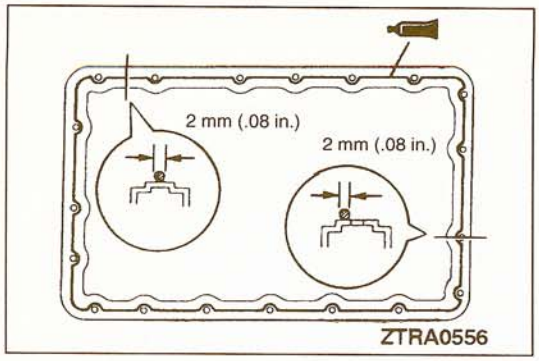


(87) Apply sealer to the oil pan and install it to the transmission case.

**Specified sealant: Threebond Seal Packing 1281**

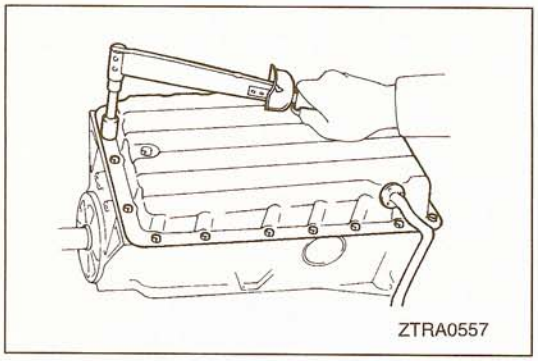


(88) Tighten the 19 bolts uniformly and step by step.

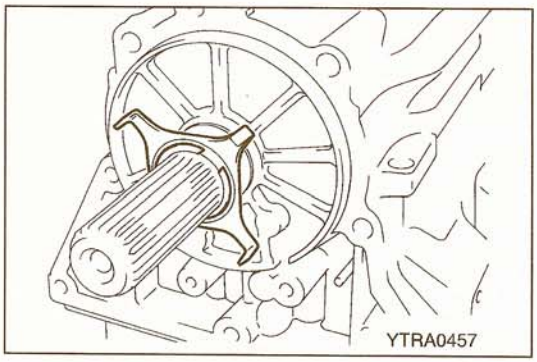


(89) Install the key and then the sensor rotor to the output shaft.
(90) Install the snap ring.

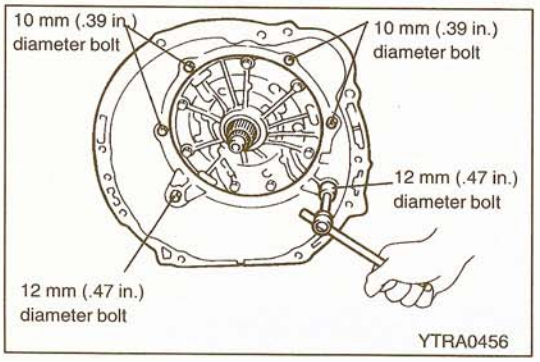


(91) Using the 6 bolts, install the housing to the transmission case.

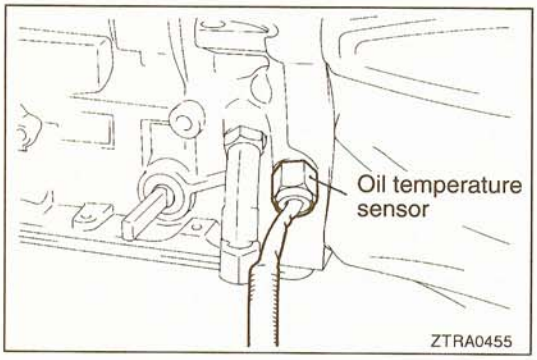


(92) Apply ATF to a new O-ring and attach it to the oil temperature sensor.
(93) Install the oil temperature sensor to the transmission case.

**TSB Revision**

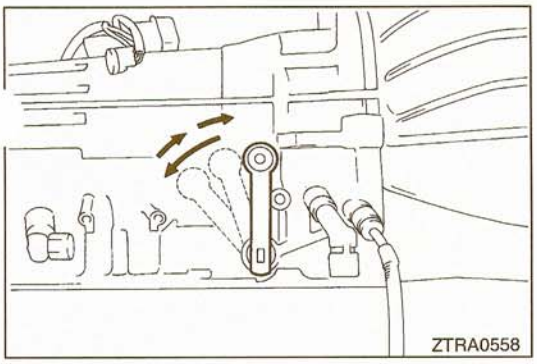


(94) Set the control shaft lever to the N range position by rotating the manual control shaft fully backward and then returning it by two notches.
(95) Insert park/neutral position switch in the manual valve shaft and tentatively tighten the set bolt.

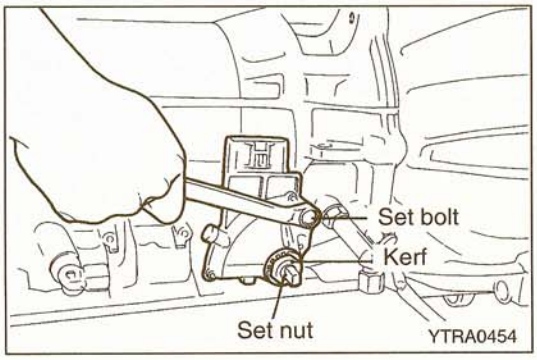


(96) Install the new gasket and lock washer and tighten the set nut.
(97) Aligning the kerf in the switch with the neutral reference line, tighten the set bolt firmly.
(98) Bend lock washer tabs.

**Caution**
**Two or more lugs must be bent.**

(99) Install the control shaft lever.

(100) Install the harness connector bracket and throttle cable clamp.
(101) Apply ATF to a new O-ring and attach it to the oil filler tube. Install the tube to the oil pan.
(102) Install the oil level gauge.

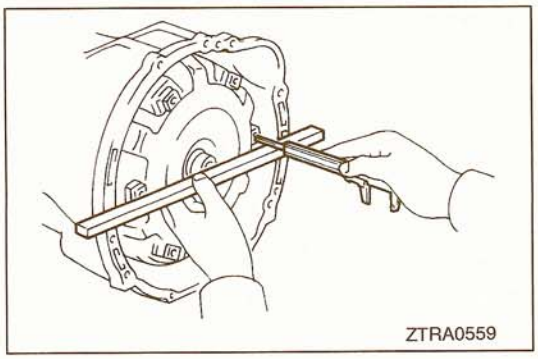


(103) Aligning the notch of the torque converter with the inner lug of the oil pump, install the torque converter.
(104) Check the illustrated dimension of the installed torque converter.

**Standard value: 31.1 mm (1.224 in.) or more**

# OIL PUMP

23300850022

## DISASSEMBLY AND REASSEMBLY

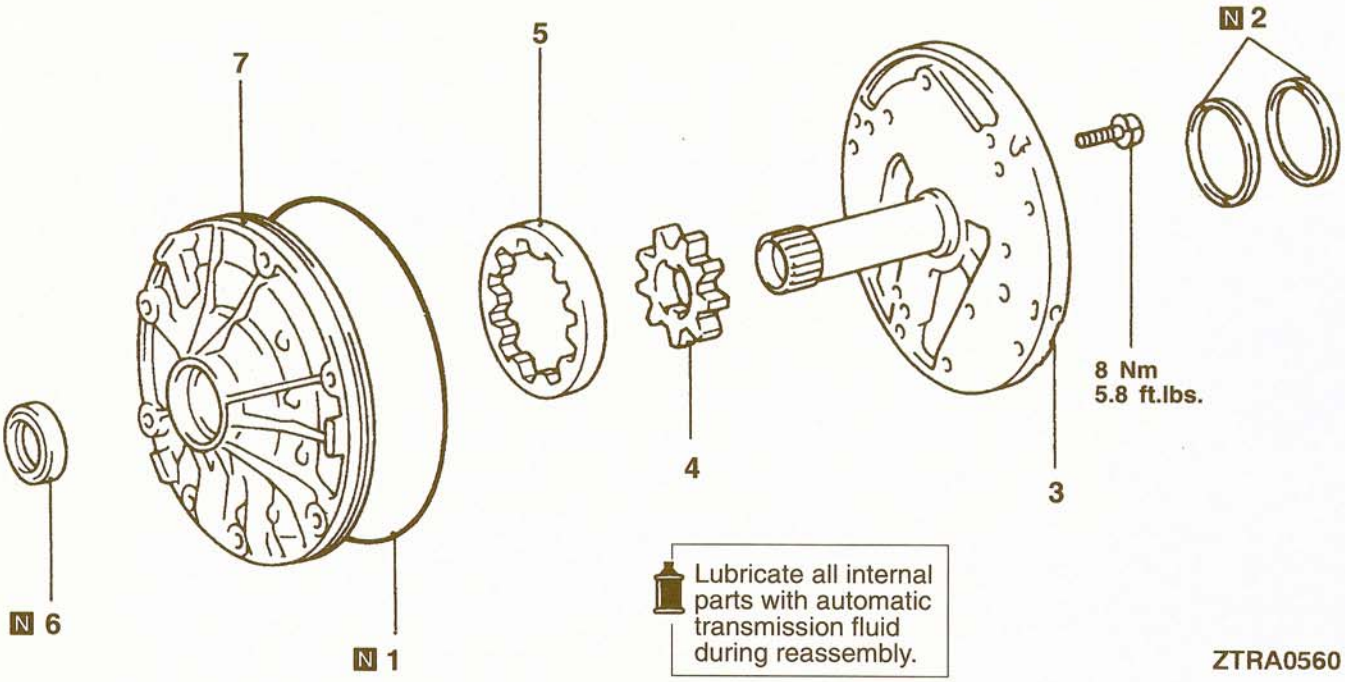


**Disassembly steps**

1. O-ring
2. Seal ring
3. Stator shaft
4. Drive gear
5. Driven gear
6. Oil seal
7. Oil pump body

▶B◀
◀A▶
◀A▶
▶A◀

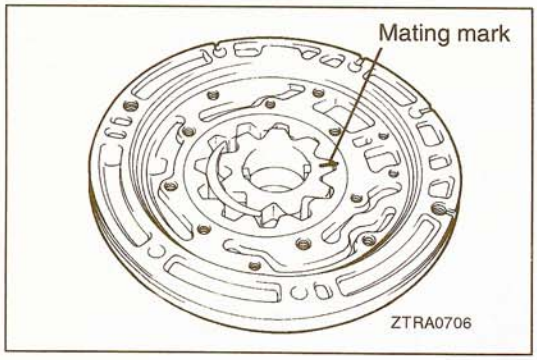


## DISASSEMBLY SERVICE POINT

### ◀A▶ DRIVE GEAR / DRIVEN GEAR REMOVAL

(1) Put mating marks on the side of removed gears for their reassembly in correct direction. (Use a felt marker or equivalent.)

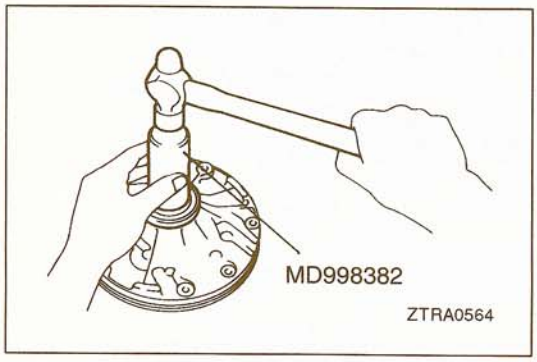


## REASSEMBLY SERVICE POINTS

### ▶A◀ OIL SEAL INSTALLATION

TSB Revision

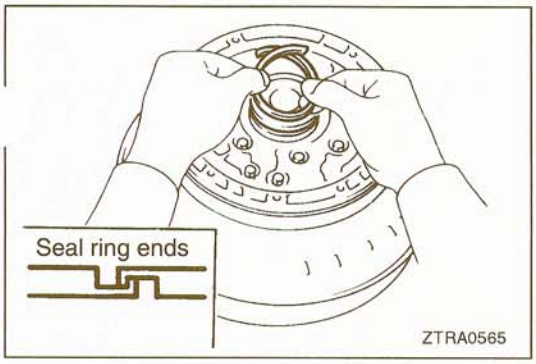


### ▶B◀ SEAL RING INSTALLATION

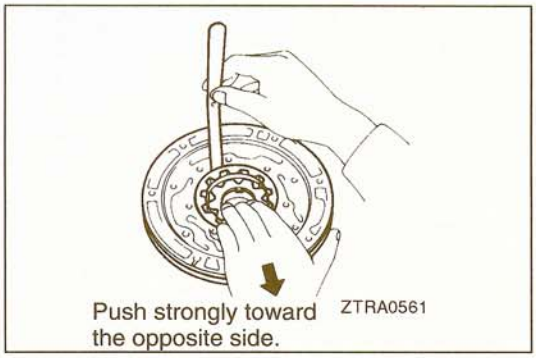


## INSPECTION

23300860018

### DRIVE GEAR AND DRIVEN GEAR

#### Body Clearance

(1) Measure the clearance between the driven gear and oil pump body with a feeler gauge while pushing the driven gear strongly toward the opposite side.

**Standard value: 0.07–0.15 mm (.0028–.0059 in.)**

**Limit: 0.3 mm (.012 in.)**

If the limit is exceeded, replace the driven gear or oil pump body.

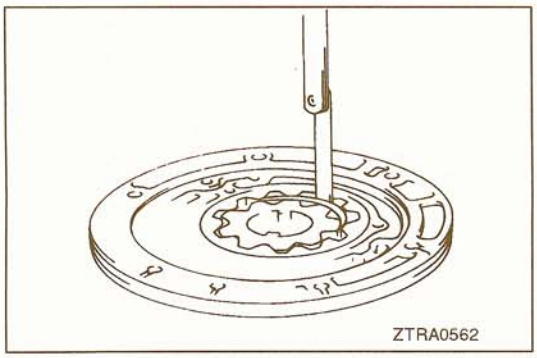


#### Tip Clearance

(1) Using a feeler gauge, measure the crescent-to-driven gear clearance.

**Standard value: 0.11–0.14 mm (.0043–.0055 in.)**

**Limit: 0.3 mm (.012 in.)**

If the limit is exceeded, replace the driven gear or oil pump body.

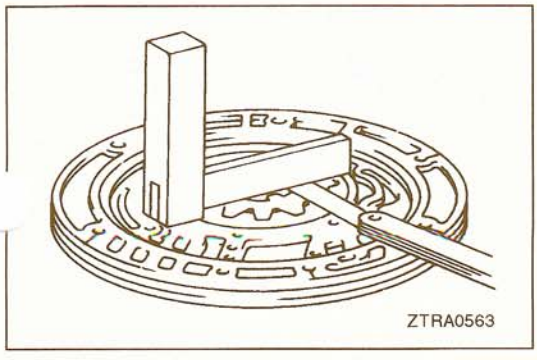


#### Side Clearance

(1) Using a square and feeler gauge, measure the side clearance of the gears with respect to the stator shaft mounting surface.

**Standard value: 0.02–0.05 mm (.0008–.0020 in.)**

**Limit: 0.3 mm (.012 in.)**

If the limit is exceeded, replace the drive gear, driven gear or oil pump body.

# OVERDRIVE PLANETARY GEAR AND OVERDRIVE DIRECT CLUTCH

23300910027

## DISASSEMBLY AND REASSEMBLY

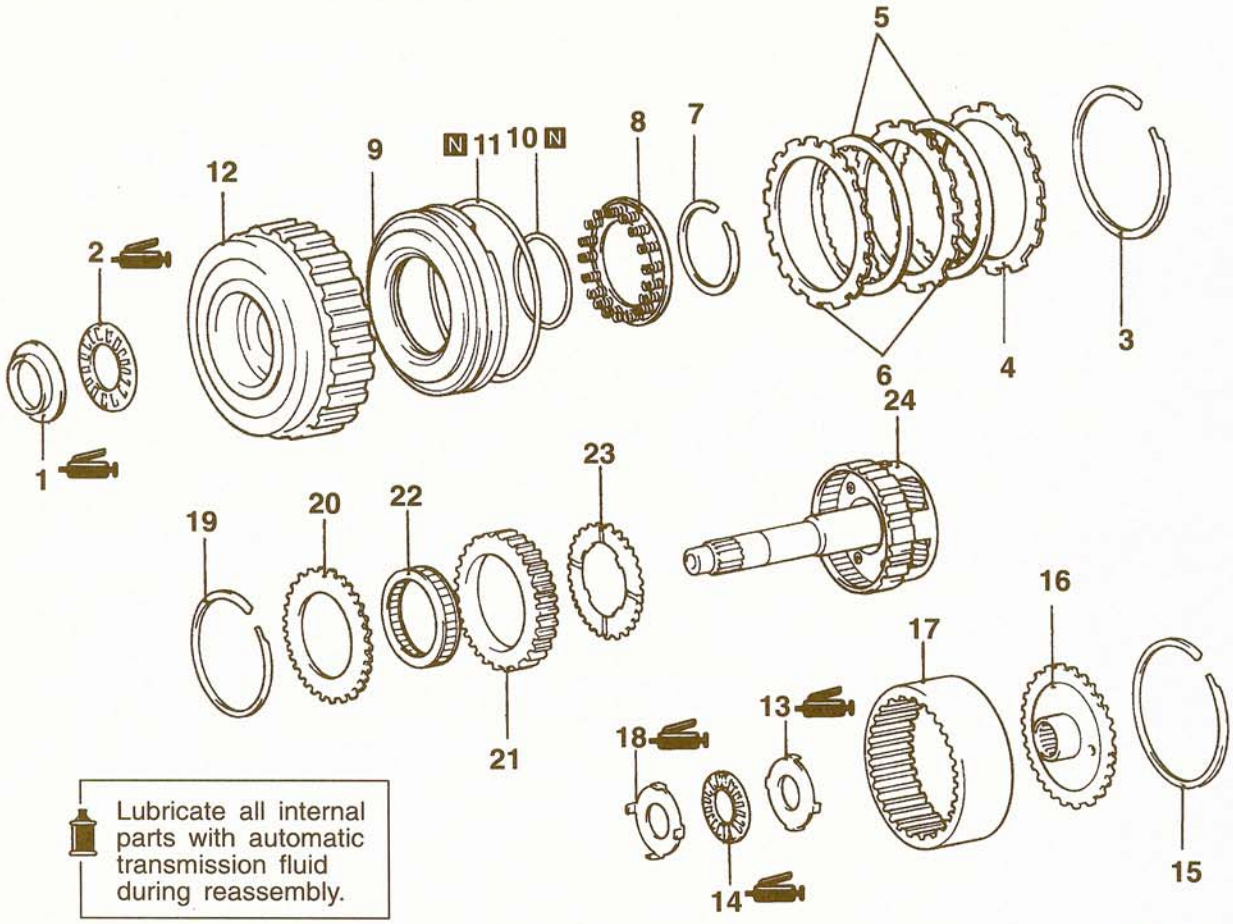


ZTRA0566

**Disassembly steps**

1. Thrust race
2. Thrust bearing
3. Snap ring
▶D◀ 4. Clutch flange
5. Clutch disc
6. Clutch plate
◀A▶ ▶C◀ 7. Snap ring
8. Return spring assembly
9. Overdrive direct clutch piston
10. O-ring
11. O-ring
12. Overdrive direct clutch drum
13. Thrust race
14. Thrust bearing
15. Snap ring
16. Overdrive planetary ring gear flange
17. Overdrive planetary ring gear
18. Thrust race
19. Snap ring
20. Retaining plate
21. One-way clutch outer race
▶B◀ 22. Overdrive one-way clutch
▶A◀ 23. Overdrive planetary gear thrust washer No.3
24. Overdrive planetary gear assembly

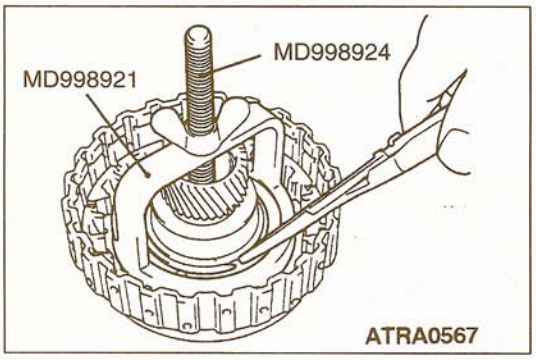


## DISASSEMBLY SERVICE POINT

### ◀A▶ SNAP RING REMOVAL

TSB Revision

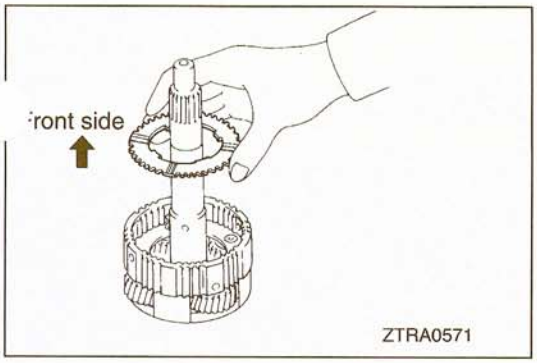


## REASSEMBLY SERVICE POINTS

### ▶A◀ OVERDRIVE PLANETARY GEAR THRUST WASHER NO.3 INSTALLATION

(1) Install the thrust washer so that its oil groove is oriented to the front side.

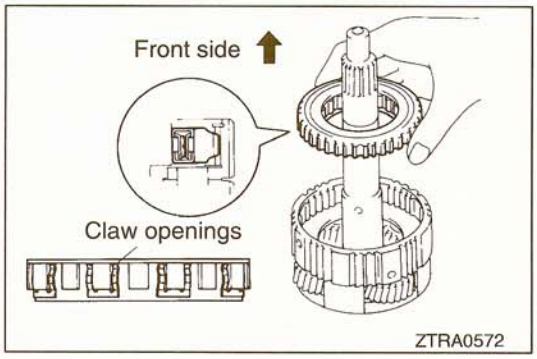


### ▶B◀ OVERDRIVE ONE-WAY CLUTCH INSTALLATION

(1) Install the clutch so that its claw openings are oriented to the front side as illustrated.

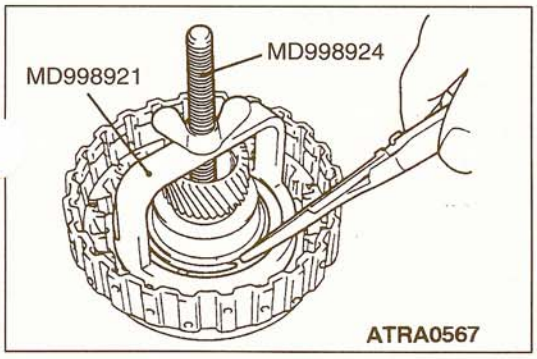


### ▶C◀ SNAP RING INSTALLATION

**Caution**
**Be sure the end gap of the snap ring is not aligned with the stopper of the spring seat.**

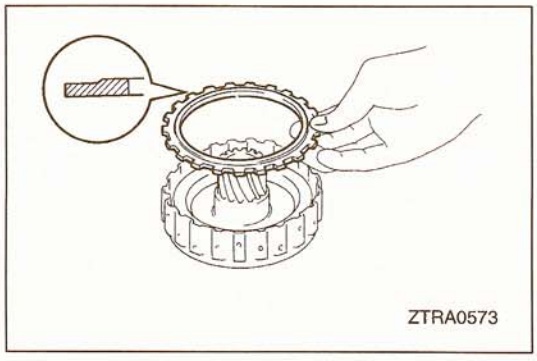


### ▶D◀ CLUTCH FLANGE INSTALLATION

(1) Install the clutch flange to the overdrive direct clutch drum so that the flange's convex side faces up as illustrated.

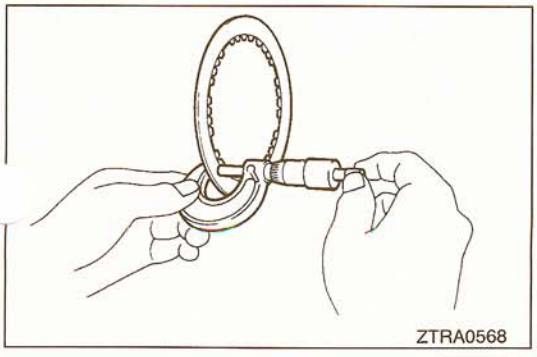


## INSPECTION

23300920020

### OVERDRIVE DIRECT CLUTCH DISC

(1) Using a micrometer, measure the thickness of the clutch disc.

**Limit: 1.84 mm (.0724 in.)**

NOTE
The thickness must be measured at two or three points. Compare the average value with the limit.

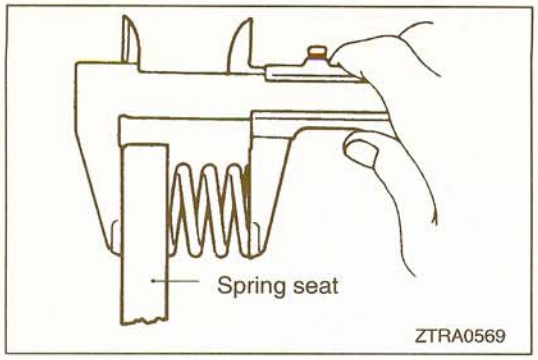


## RETURN SPRING ASSEMBLY

(1) Measure the free length of the spring including the spring seat.

**Standard value: Approx. 15.8 mm (.622 in.)**

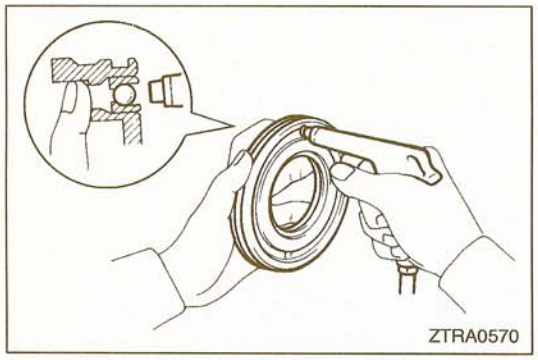


## OVERDRIVE DIRECT CLUTCH PISTON

(1) Check that the check ball is free by shaking the piston.
(2) Check that the valve does not leak by applying low-pressure compressed air.

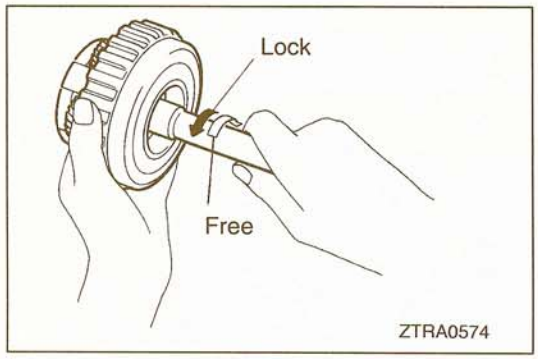


## OPERATION OF ONE-WAY CLUTCH

(1) While holding the overdrive direct clutch drum, turn the input shaft clockwise to see that the shaft turns smoothly and turn it counterclockwise to see that the shaft is locked.

NOTE
(1) If the shaft turns or locks in both directions, replace the one-way clutch.
(2) If the shaft turns counterclockwise while it doesn't turn clockwise, the one-way clutch may have been assembled in the reverse direction.

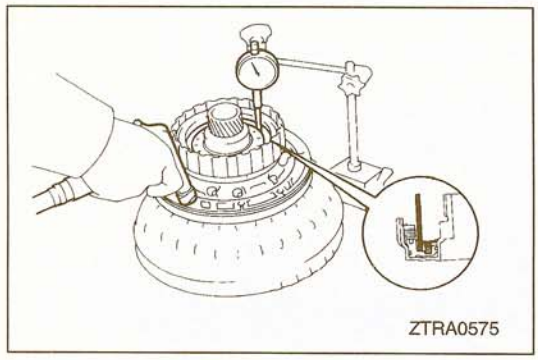


## OVERDRIVE DIRECT CLUTCH PISTON STROKE

(1) Install the oil pump to the torque converter. Install the overdrive direct clutch assembly to the oil pump.
(2) Using a dial gauge, measure the piston stroke by applying compressed air (400–800 kPa, 57–113 psi) into the oil hole of the oil pump as shown and then releasing the air.

**Standard value: 1.85–2.15 mm (.0728–.0846 in.)**

If the stroke is out of this range, replace the clutch flange with an appropriate one so that the stroke becomes within this range.

NOTE
When selecting the flange, aim at the center of the range.

[Available flange]

| Identification code | 16 | 17 | 18 | 19 | 20 | 21 |
|---|---|---|---|---|---|---|
| Thickness mm (in.) | 3.6 (.142) | 3.5 (.138) | 3.4 (.134) | 3.3 (.130) | 3.2 (.126) | 3.1 (.122) |

TSB Revision

# OVERDRIVE SUPPORT

23302350018

## DISASSEMBLY AND REASSEMBLY

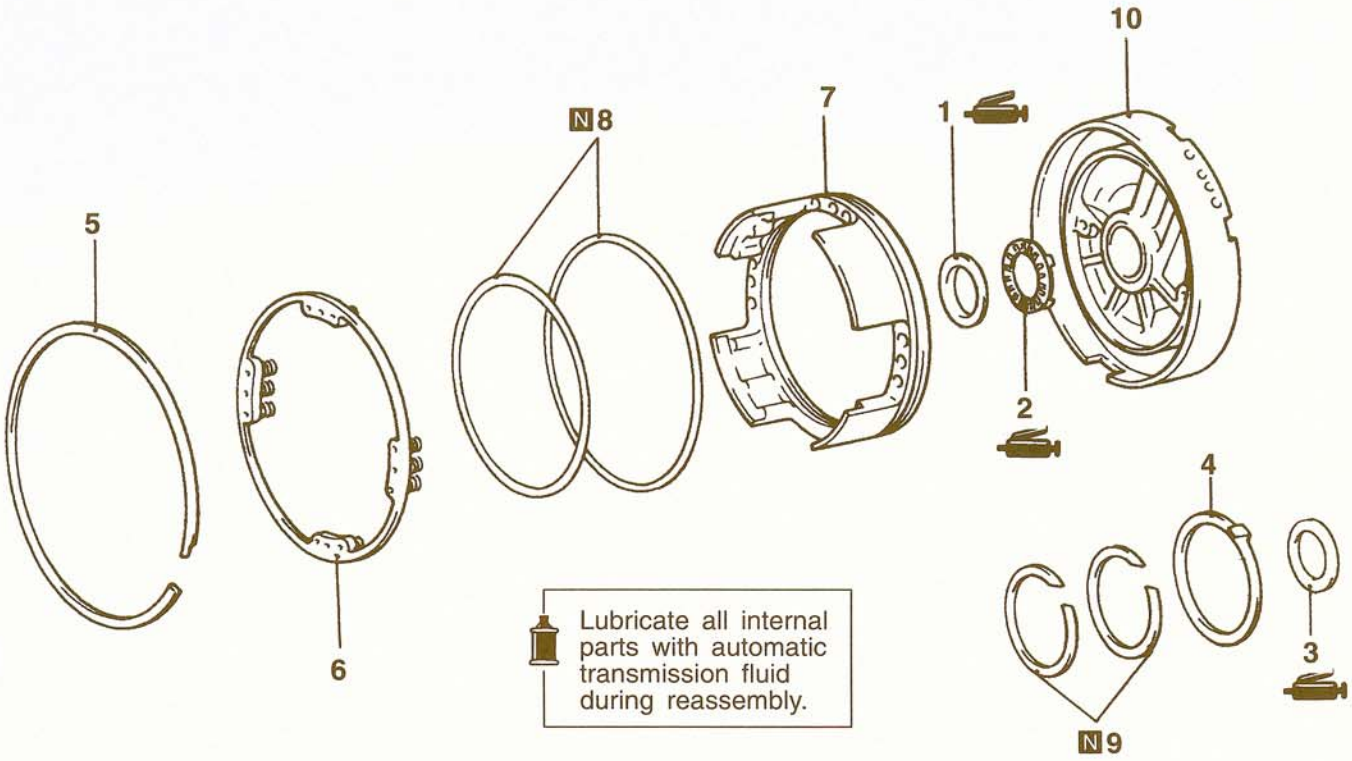


ZTRA0576

**Disassembly steps**

1. Thrust race
2. Thrust bearing
3. Thrust race
4. Clutch drum thrust washer
◀A▶ ▶A◀ 5. Snap ring
6. Return spring assembly
7. Overdrive brake piston
8. O-ring
9. Seal ring
10. Overdrive support assembly

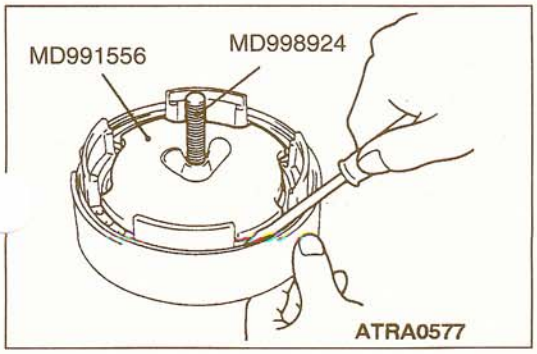


### DISASSEMBLY SERVICE POINT

◀A▶ SNAP RING REMOVAL

TSB Revision

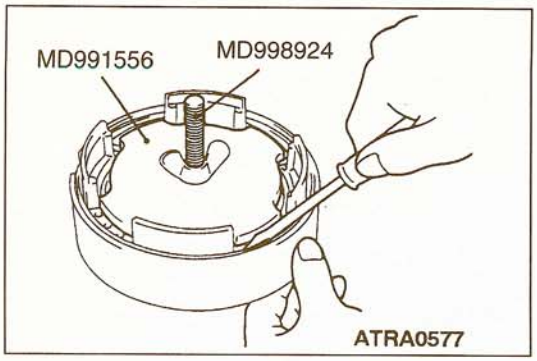


## REASSEMBLY SERVICE POINT

### ▶A◀ SNAP RING INSTALLATION

**Caution**

1. **Be sure the end gap of the snap ring is not aligned with the cutout of the support.**
2. **Set the support in such a way that its central convex portion doesn't touch the workbench.**

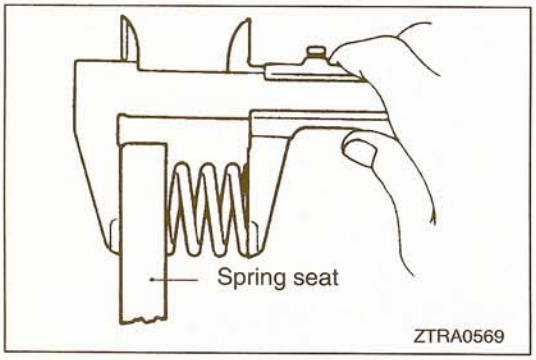


## INSPECTION

23302360011

### RETURN SPRING ASSEMBLY

(1) Measure the free length of the spring including the spring seat.

**Standard value: Approx. 18.6 mm (.732 in.)**

# DIRECT CLUTCH

23300970025

## DISASSEMBLY AND REASSEMBLY

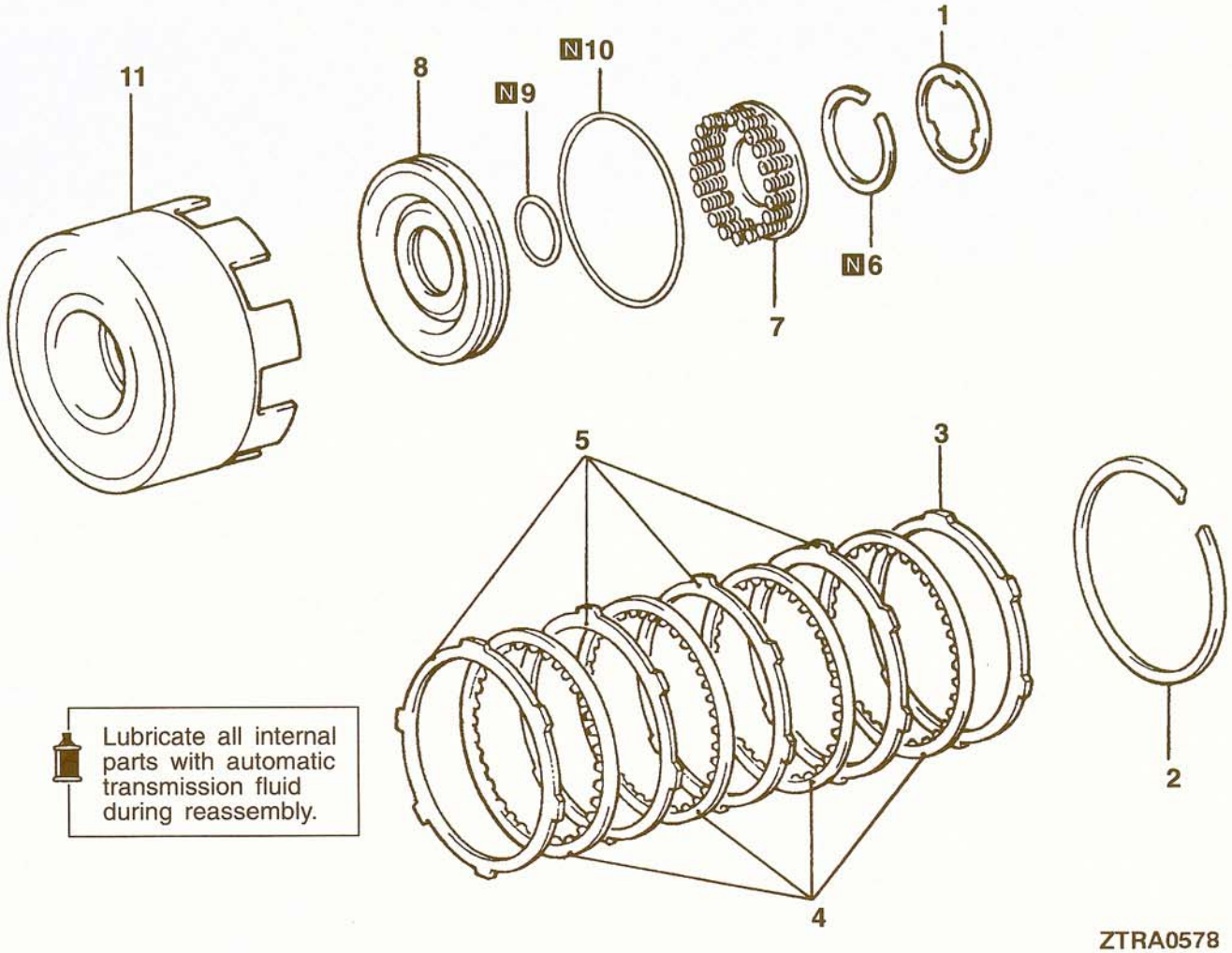


ZTRA0578

**Disassembly steps**

1. Thrust washer No.2
2. ▶C◀ Snap ring
3. ▶B◀ Clutch flange
4. Clutch disc
5. Clutch plate
6. ◀A▶ ▶A◀ Snap ring
7. Return spring assembly
8. Direct clutch piston
9. O-ring
10. O-ring
11. Direct clutch drum

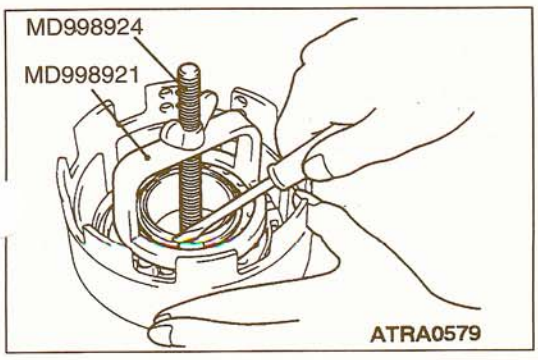


## DISASSEMBLY SERVICE POINT

### ◀A▶ SNAP RING REMOVAL

TSB Revision

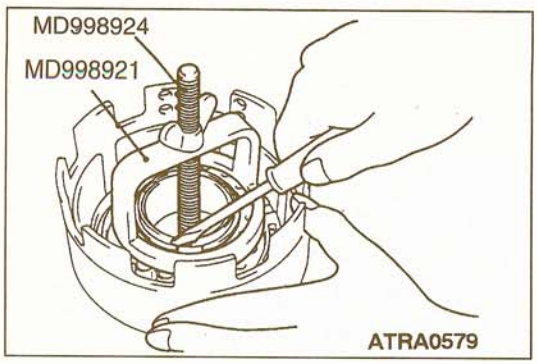


## REASSEMBLY SERVICE POINTS

### ▶A◀ SNAP RING INSTALLATION

**Caution**
**Be sure the end gap of the snap ring is not aligned with the stopper of the spring seat.**

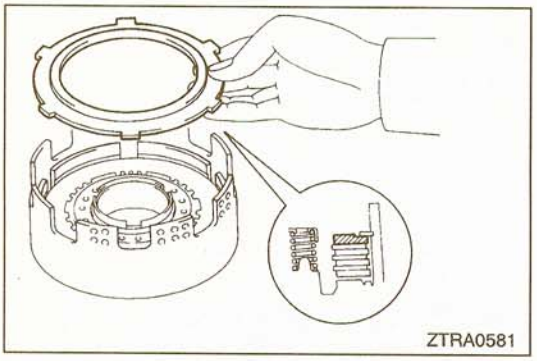


### ▶B◀ CLUTCH FLANGE INSTALLATION

(1) Install the clutch flange to the direct clutch drum so that the flange's convex side is oriented to the rear side.

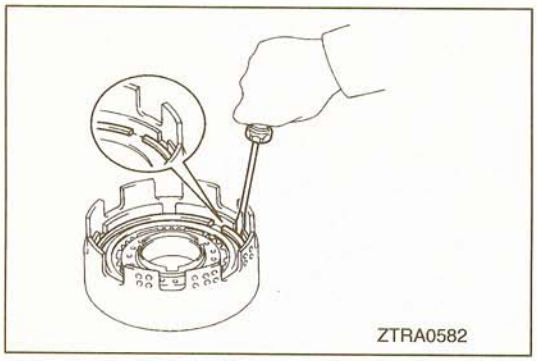


### ▶C◀ SNAP RING INSTALLATION

(1) Install the snap ring so that the end gap of the snap ring is not aligned with the inner cutout of the direct clutch drum.

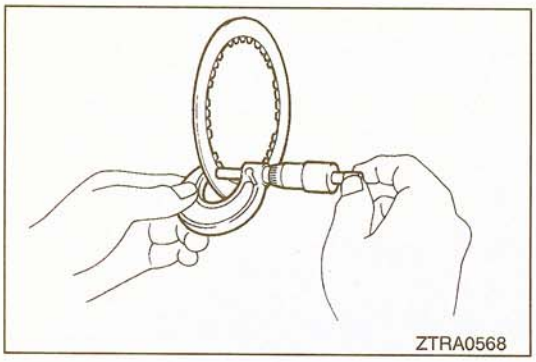


## INSPECTION

23300980011

### DIRECT CLUTCH DISC

(1) Using a micrometer, measure the thickness of the clutch disc.

**Limit: 1.84 mm (.072 in.)**

NOTE
The thickness must be measured at two or three points. Compare the average value with the limit.

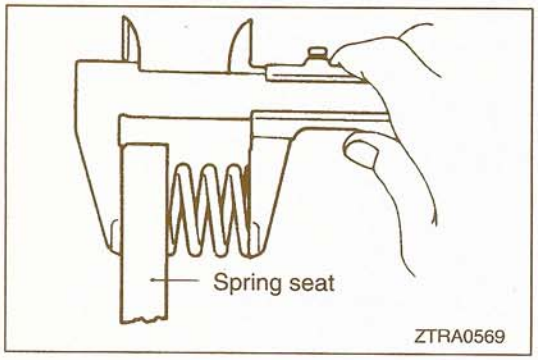


### RETURN SPRING ASSEMBLY

(1) Measure the free length of the spring including the spring seat.

**Standard value: Approx. 19.8 mm (.780 in.)**

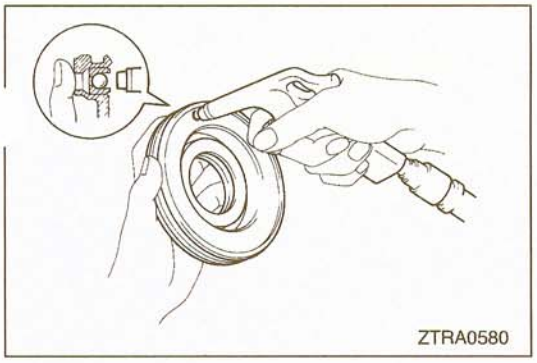


## DIRECT CLUTCH PISTON

(1) Check that the check ball is free by shaking the piston.
(2) Check that the valve does not leak by applying low-pressure compressed air.

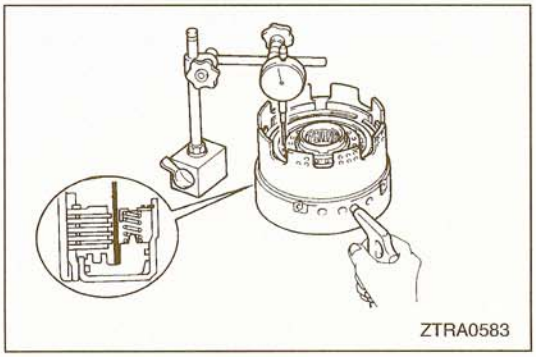


## DIRECT CLUTCH PISTON STROKE

(1) Install the direct clutch to the overdrive support assembly.
(2) Using a dial gauge, measure the piston stroke by applying compressed air (400–800 kPa, 57–113 psi) into the oil hole of the overdrive support as shown and then releasing the air.

**Standard value: 1.37–1.67 mm (.0539–.0657 in.)**

If the stroke is out of this range, replace the clutch flange with an appropriate one so that the stroke becomes within this range.

NOTE
When selecting the flange, aim at the center of the range.

[Available flanges]

| Identification code | 33 | 32 | 31 | 30 | 29 | 28 | 27 | 34 |
|---|---|---|---|---|---|---|---|---|
| Thickness mm (in.) | 3.0 (.118) | 3.1 (.122) | 3.2 (.126) | 3.3 (.130) | 3.4 (.134) | 3.5 (.138) | 3.6 (.142) | 3.7 (.146) |

# FORWARD CLUTCH

23301030029

## DISASSEMBLY AND REASSEMBLY

**No. of clutrch discs/plates**

| | Clutch disc | Clutch plate |
|---|---|---|
| 6G72 | 5 | 5 |
| 6G74 | 6 | 6 |

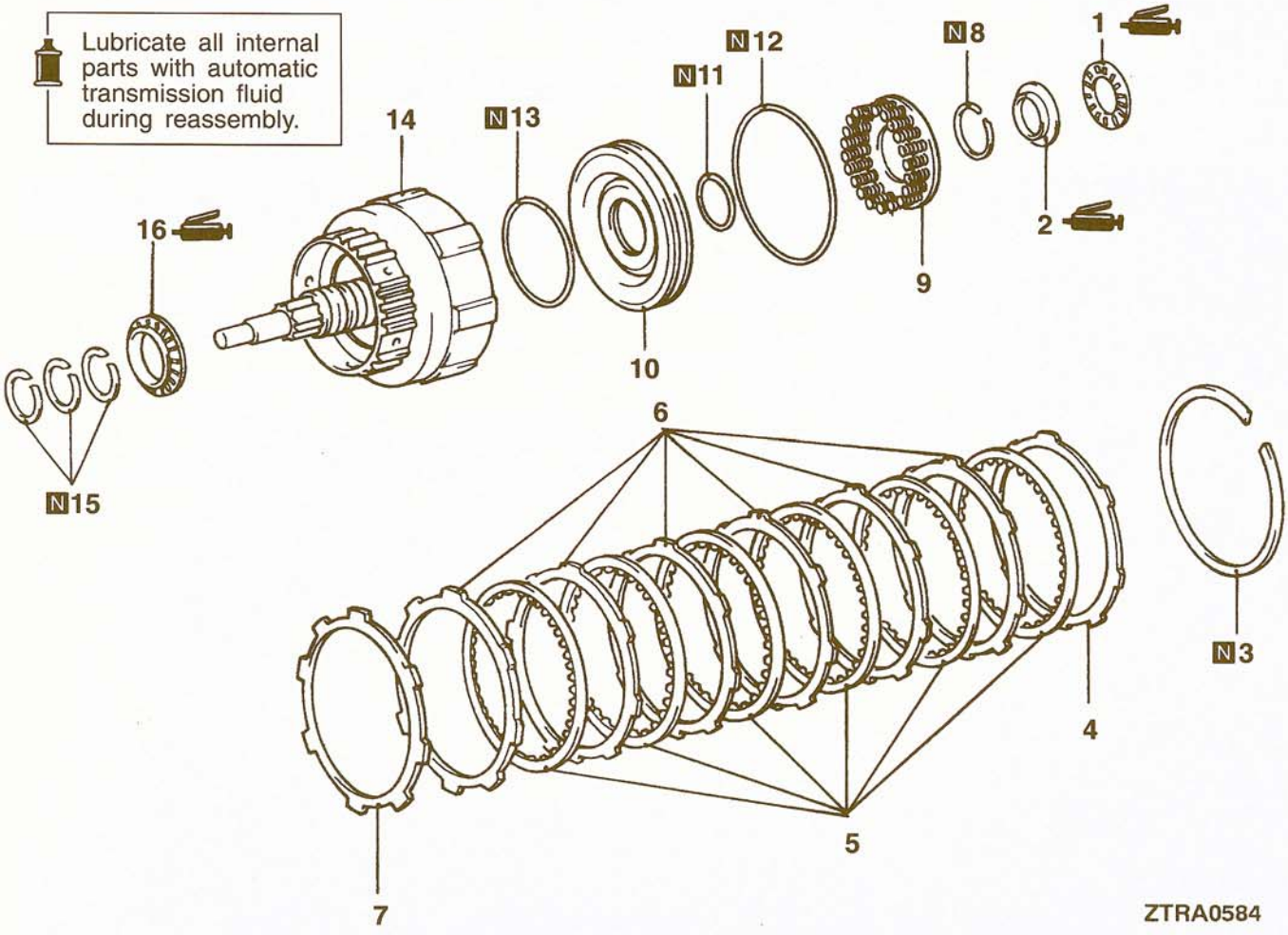


**Disassembly steps**

1. Thrust bearing
2. Thrust race
▶D◀ 3. Snap ring
▶C◀ 4. Clutch flange
5. Clutch disc
6. Clutch plate
▶B◀ 7. Cushion plate
◀A▶ ▶A◀ 8. Snap ring
9. Return spring assembly
10. Forward clutch piston
11. O-ring
12. O-ring
13. O-ring
14. Forward clutch drum
15. Seal ring
16. Thrust bearing

**TSB Revision**

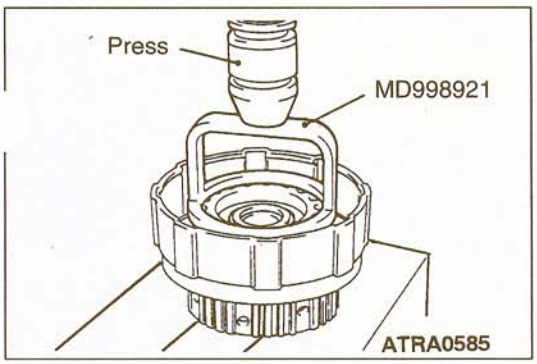


## DISASSEMBLY SERVICE POINT

### ◀A▶ SNAP RING REMOVAL

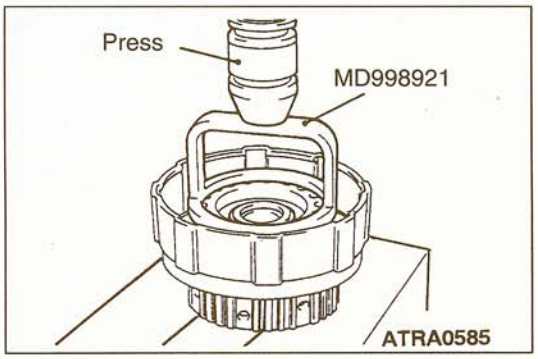


## REASSEMBLY SERVICE POINTS

### ▶A◀ SNAP RING INSTALLATION

**Caution**
**Be sure the end gap of the snap ring is not aligned with the stopper of the spring seat.**

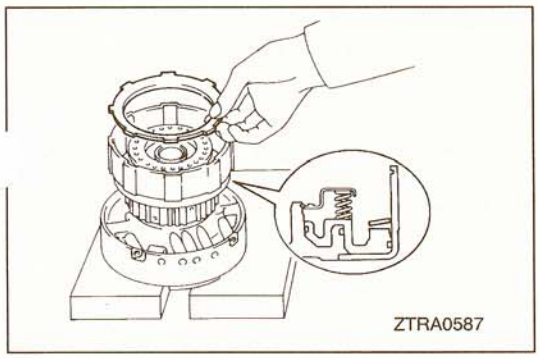


### ▶B◀ CUSHION PLATE INSTALLATION

(1) Install the cushion plate to the forward clutch drum so that its convex side is oriented to the piston side.

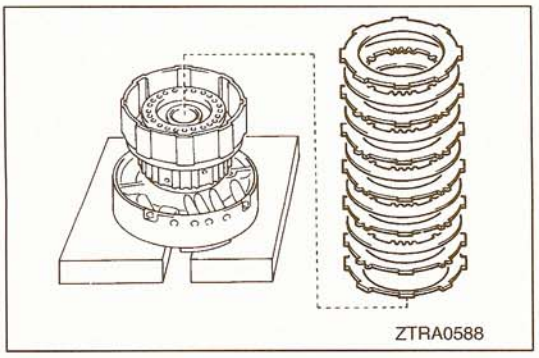


### ▶C◀ CLUTCH FLANGE INSTALLATION

(1) Install the clutch flange to the forward clutch drum so that the flange's chamfer is oriented to the disc side.

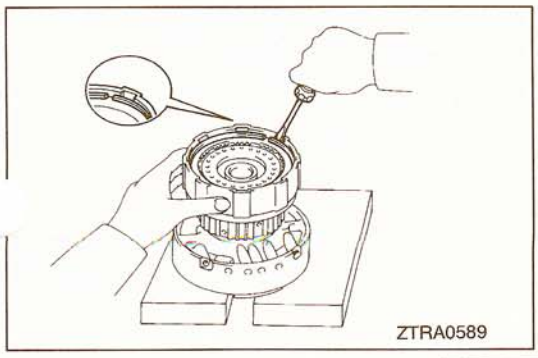


### ▶D◀ SNAP RING INSTALLATION

(1) Install the snap ring so that the end gap of the snap ring is not aligned with the inner cutout of the direct clutch drum.

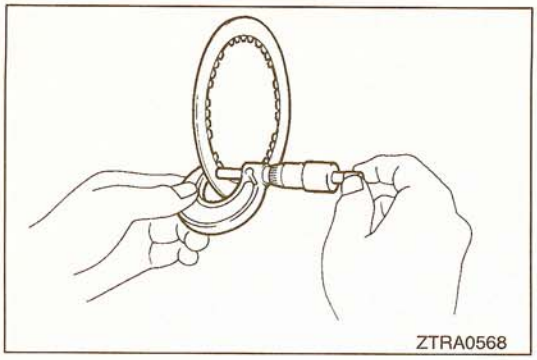
ZTRA0568

## INSPECTION

23301040015

### FORWARD CLUTCH DISC

(1) Using a micrometer, measure the thickness of the clutc' disc.

**Limit: 1.84 mm (.0724 in.)**

NOTE
The thickness must be measured at two or three points. Compare the average value with the limit.

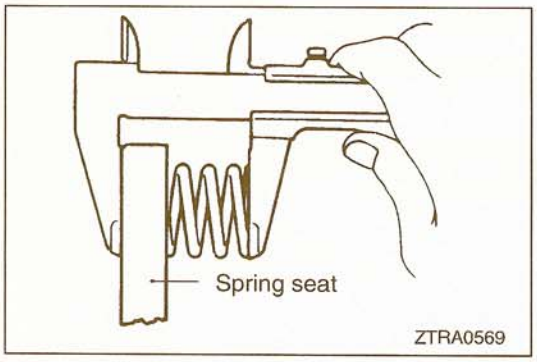

ZTRA0569

### RETURN SPRING ASSEMBLY

(1) Measure the free length of the spring including the spring seat.

**Standard value: Approx. 11.55 mm (.4547 in.)**

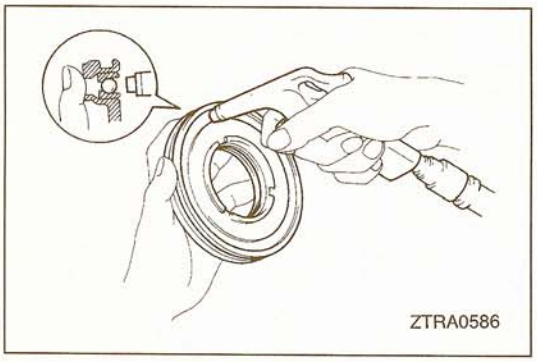
ZTRA0586

### FORWARD CLUTCH PISTON

(1) Check that the check ball is free by shaking the piston.
(2) Check that the valve does not leak by applying low-pressure compressed air.

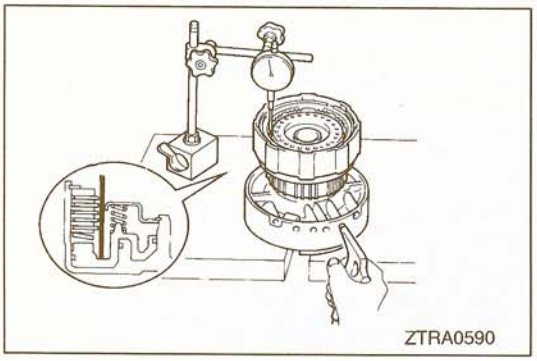
ZTRA0590

### FORWARD CLUTCH PISTON STROKE

(1) Install the forward clutch to the overdrive support assembly.
(2) Using a dial gauge, measure the piston stroke by applying compressed air (400–800 kPa, 57–113 psi) into the oil hole of the overdrive support as shown and then releasing the air.

**Standard value: 2.90–4.29 mm (.1141–.1689 in.)**

# FRONT PLANETARY GEAR

23301060028

## DISASSEMBLY AND REASSEMBLY

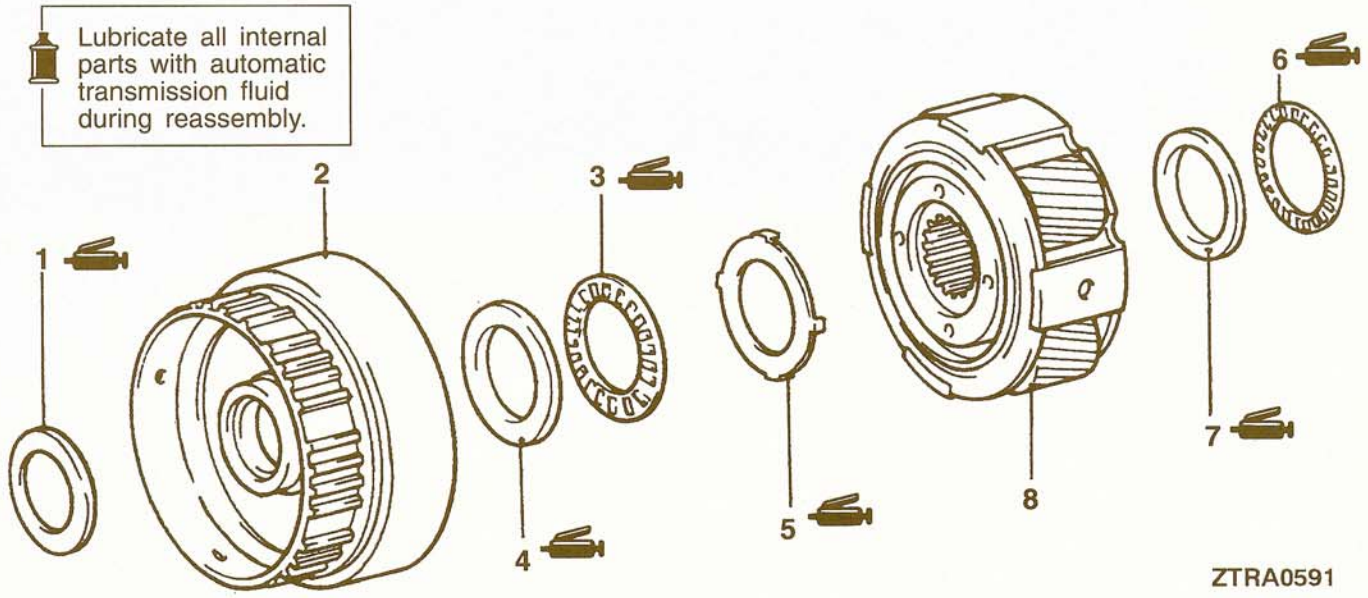


**Disassembly steps**

1. Thrust race
2. Front planetary ring gear assembly
3. ▶C◀ Thrust bearing
4. ▶C◀ Thrust race
5. ▶B◀ Thrust race
6. ▶A◀ Thrust bearing
7. ▶A◀ Thrust race
8. Front planetary gear assembly

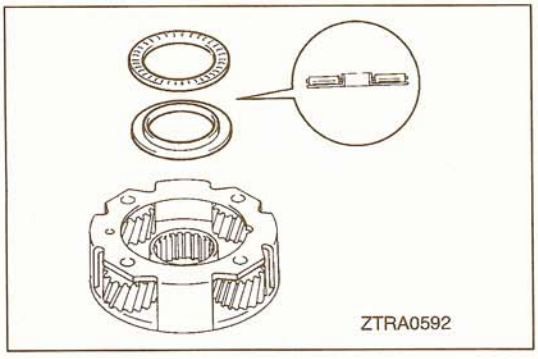


## REASSEMBLY SERVICE POINTS

### ▶A◀ THRUST RACE / THRUST BEARING INSTALLATION

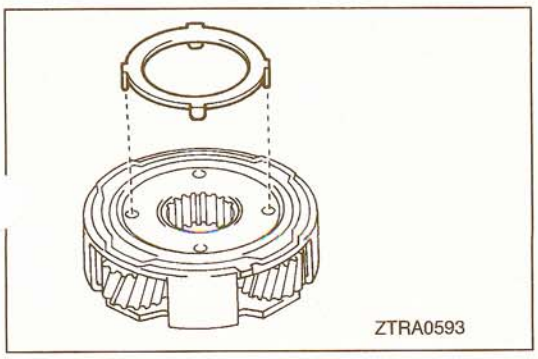


### ▶B◀ THRUST RACE INSTALLATION

(1) Install the thrust race to the planetary gear assembly while aligning its claws with the holes of the front planetary gear.

TSB Revision

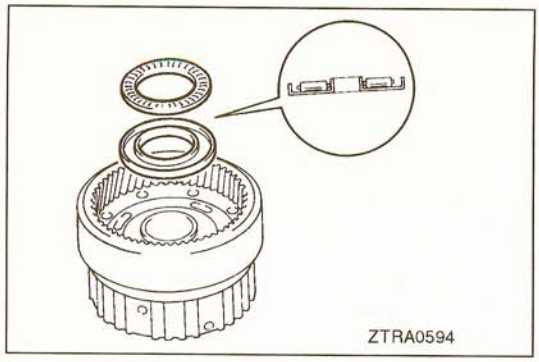


▶C◀ THRUST RACE / THRUST BEARING INSTALLATION

# PLANETARY SUN GEAR AND ONE-WAY CLUTCH NO.1

23301180014

## DISASSEMBLY AND REASSEMBLY

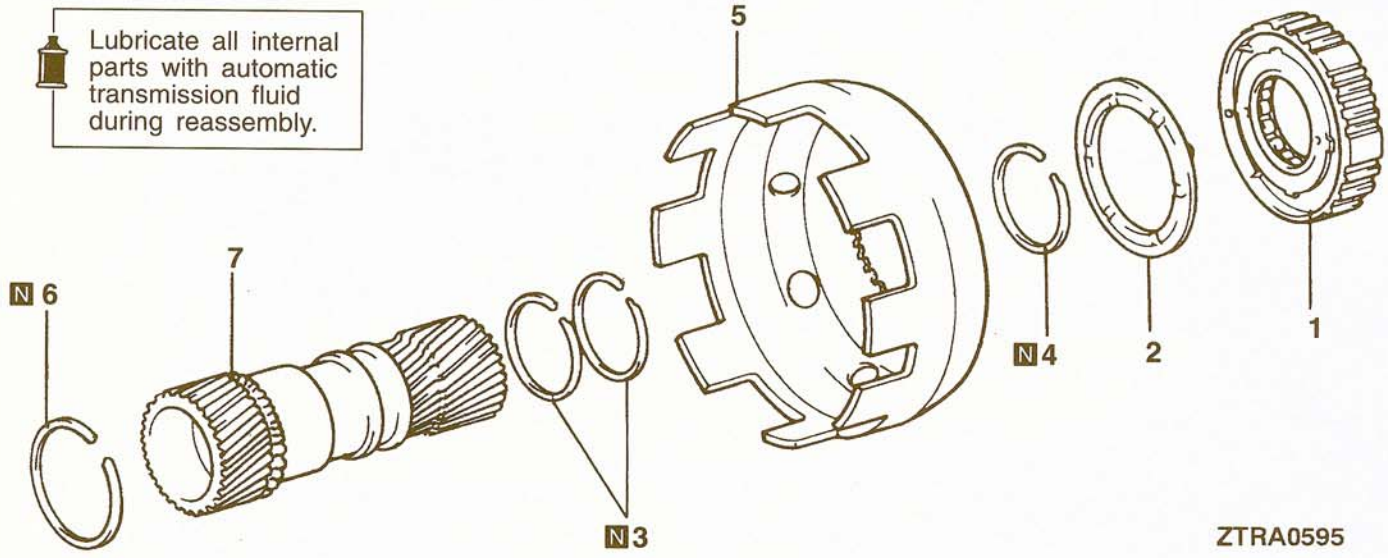


**Disassembly steps**

- ▶C◀ 1. One-way clutch assembly
- ▶B◀ 2. One-way clutch thrust washer No.1
- ▶A◀ 3. Seal ring
- 4. Snap ring
- 5. Sun gear input drum
- 6. Snap ring
- 7. Planetary sun gear

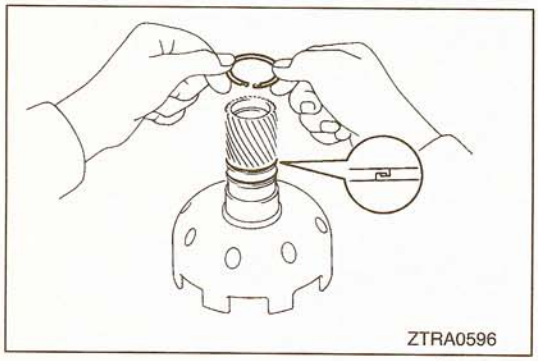


## REASSEMBLY SERVICE POINTS

### ▶A◀ SEAL RING INSTALLATION

(1) Don't open the seal ring wider than necessary. Be careful not to bend the claws.

TSB Revision

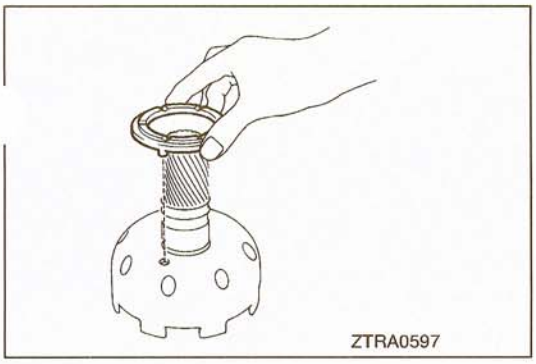
ZTRA0597

### ▶B◀ ONE-WAY CLUTCH THRUST WASHER NO.1 INSTALLATION

(1) Install the thrust washer to the sun gear input drum while aligning its convex with the hole of the drum.

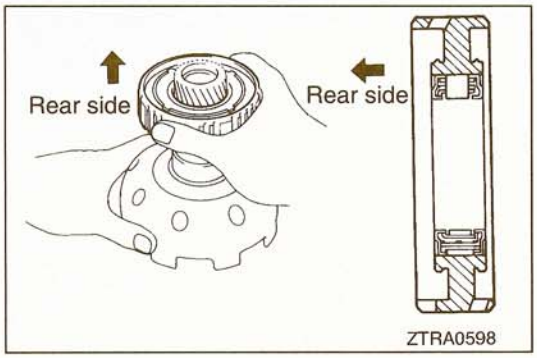

ZTRA0598

### ▶C◀ ONE-WAY CLUTCH ASSEMBLY INSTALLATION

(1) Install the one-way clutch assembly to the planetary sun gear in the direction shown in the illustration.

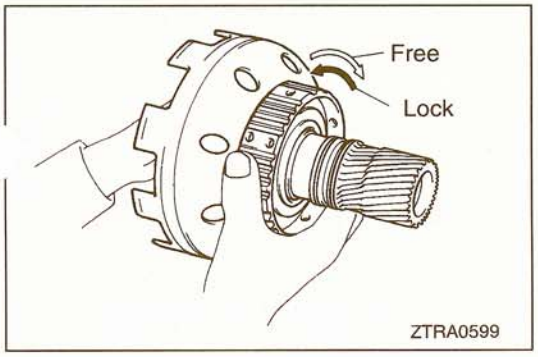

ZTRA0599

## INSPECTION

23301190017

### OPERATION OF ONE-WAY CLUTCH

(1) While holding planetary sun gear, turn the one-way clutch clockwise to see that the clutch turns smoothly and turn it counterclockwise to see that the clutch is locked.

NOTE
(1) If the one-way clutch turns or locks in both directions, replace the one-way clutch.
(2) If the one-way clutch turns counterclockwise while it doesn't turn clockwise, the one-way clutch may have been installed in the reverse direction.

# SECOND BRAKE

23302180020

## DISASSEMBLY AND REASSEMBLY

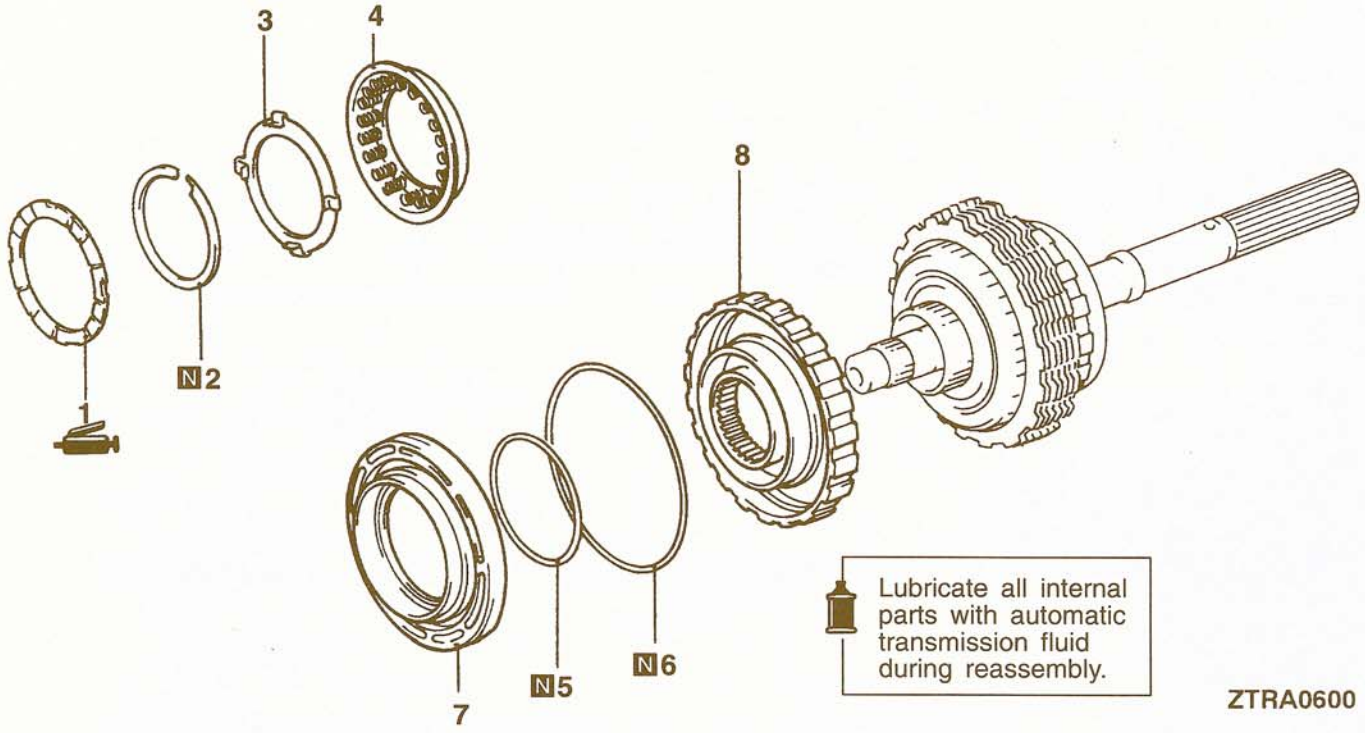


**Disassembly steps**

◀A▶ ▶A◀
1. One-way clutch thrust washer No.2
2. Snap ring
3. Return spring seat
4. Return spring assembly

◀B▶
5. O-ring
6. O-ring
7. Second brake piston
8. Second brake drum assembly

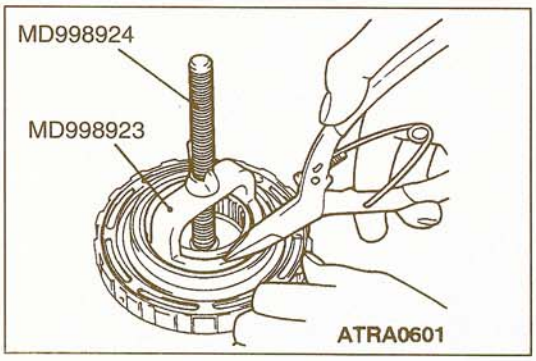


## DISASSEMBLY SERVICE POINTS

### ◀A▶ SNAP RING REMOVAL

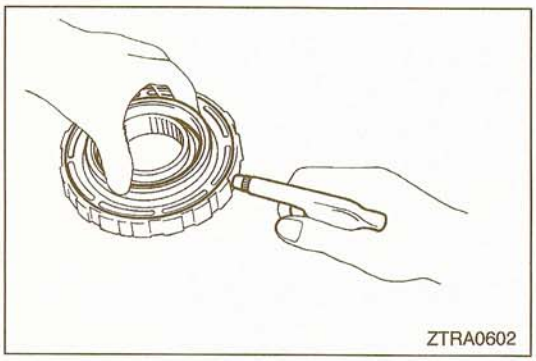


### ◀B▶ SECOND BRAKE PISTON REMOVAL

(1) With the second brake piston held, blow air into the second brake drum through the oil hole to remove the second brake piston.

**Caution**
**Do not blow air suddenly because the piston m be tipped and become hard to remove.**

**TSB Revision**

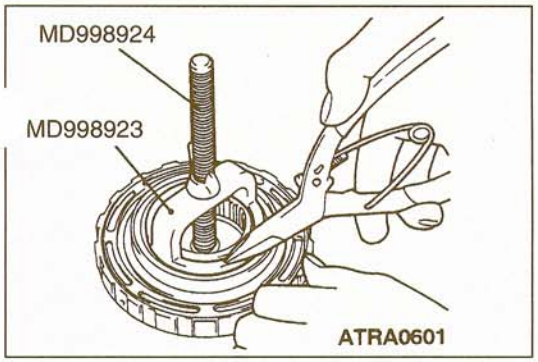


## REASSEMBLY SERVICE POINT

### ▶A◀ SNAP RING INSTALLATION

**Caution**
**Be sure the end gap of the snap ring is not aligned with the stopper of the spring seat.**

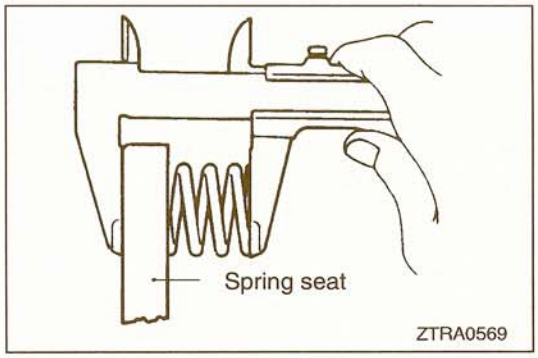


## INSPECTION

23302190016

### RETURN SPRING ASSEMBLY

(1) Measure the free length of the spring including the spring seat.

**Standard value: Approx. 15.05 mm (.5925 in.)**

# REAR PLANETARY GEAR, OUTPUT SHAFT AND FIRST & REVERSE BRAKE

23301090027

## DISASSEMBLY AND REASSEMBLY

**No. of clutrch discs/plates**

| | Clutch disc | Clutch plate |
|---|---|---|
| 6G72 | 6 | 6 |
| 6G74 | 7 | 7 |

Lubricate all internal parts with automatic transmission fluid during reassembly.

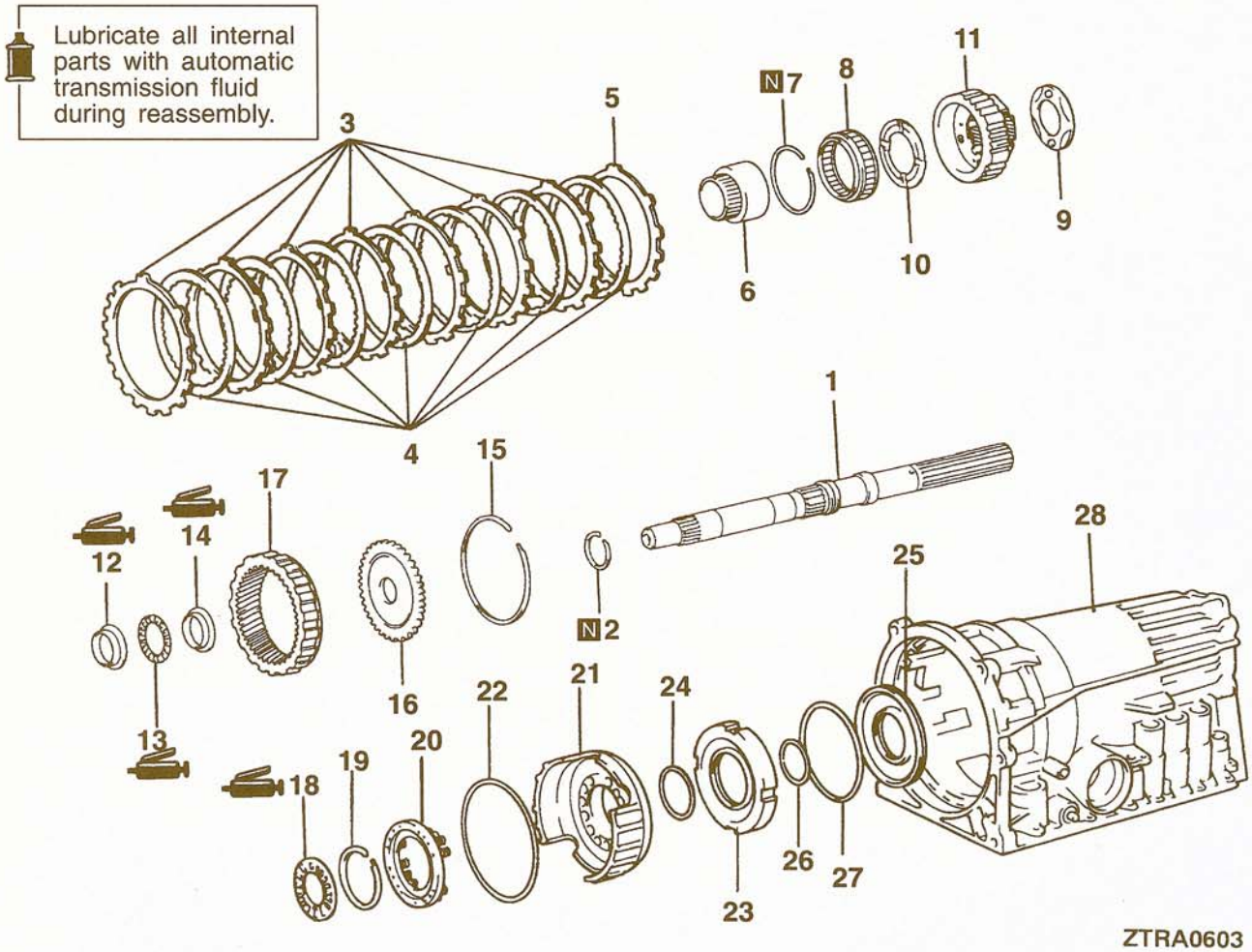


ZTRA0603

**Disassembly steps**

1. Output shaft
▶I◀ 2. Seal ring
3. Brake plate
4. Brake disc
5. Brake flange
▶H◀ 6. One-way clutch inner race
7. Snap ring
▶G◀ 8. One-way clutch No.2
▶F◀ 9. Planetary carrier thrust washer No.1
▶F◀ 10. Planetary carrier thrust washer No.2
11. Rear planetary gear assembly
▶E◀ 12. Thrust race
▶E◀ 13. Thrust bearing
▶E◀ 14. Thrust race
15. Snap ring
16. Rear planetary ring gear flange
17. Rear planetary ring gear
▶D◀ 18. Thrust bearing with race
◀A▶ ▶C◀ 19. Snap ring
20. Return spring assembly
◀B▶ ▶B◀ 21. First & Reverse brake piston No.2
22. O-ring
◀C▶ ▶A◀ 23. Brake reaction sleeve
24. O-ring
◀D▶ ▶A◀ 25. First & Reverse brake piston No.1
26. O-ring
27. O-ring
28. Transmission case assembly

**TSB Revision**

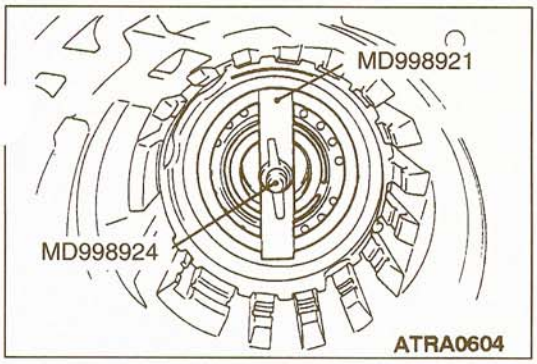


## DISASSEMBLY SERVICE POINTS

### ◀A▶ SNAP RING INSTALLATION

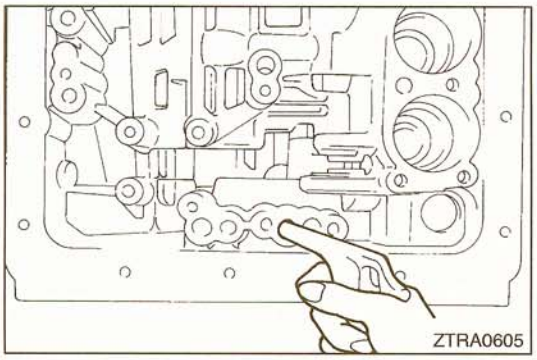


### ◀B▶ FIRST & REVERSE BRAKE PISTON NO.2 REMOVAL

(1) With the first & reverse brake piston No.2 held, blow air into the transmission case through the oil hole to remove the first & reverse brake piston No.2.

**Caution**
**Do not blow air suddenly because the piston may be tipped and become hard to remove.**

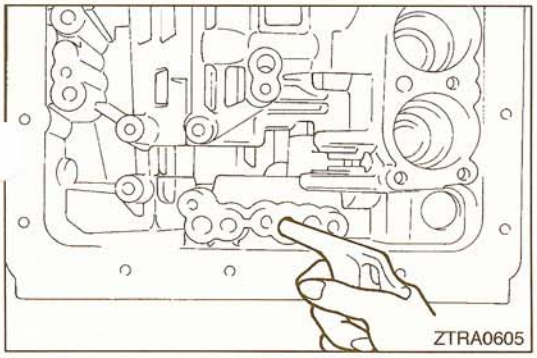


### ◀C▶ BRAKE REACTION SLEEVE REMOVAL

(1) With the brake reaction sleeve held, blow air into the transmission case through the oil hole to remove the brake reaction sleeve.

**Caution**
**Do not blow air suddenly because the sleeve may be tipped and become hard to remove.**

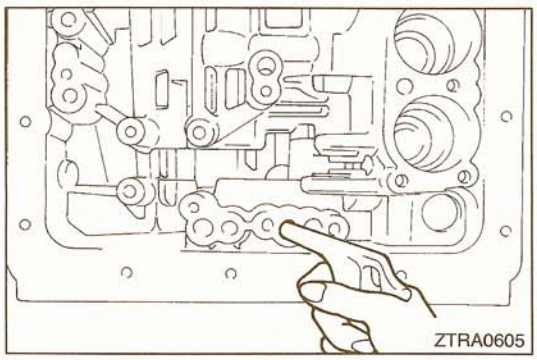


### ◀D▶ FIRST & REVERSE BRAKE PISTON NO.1 REMOVAL

(1) With the first & reverse brake piston No.1 held, blow air into the transmission case through the oil hole to remove the piston.

**Caution**
**Do not blow air suddenly because the piston may be tipped and become hard to remove.**

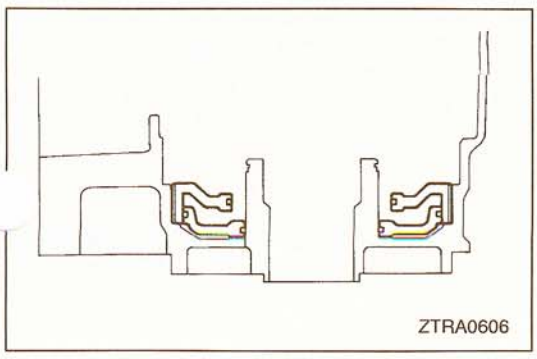


## REASSEMBLY SERVICE POINTS

### ▶A◀ FIRST & REVERSE BRAKE PISTON NO.1 / REVERSE BRAKE SLEEVE INSTALLATION

(1) Install the first & reverse brake piston No.1 and the reverse brake sleeve together to the transmission case.

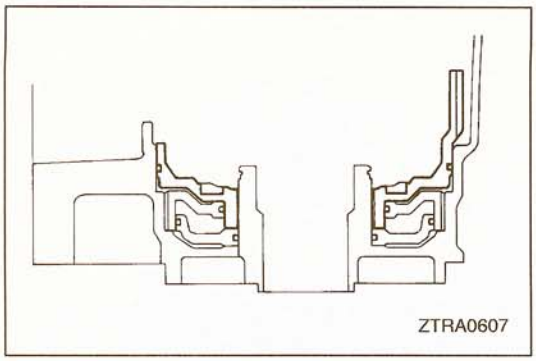


### ▶B◀ FIRST & REVERSE BRAKE PISTON NO.2 INSTALLATION

(1) Aligning the convex of the first & reverse brake piston No.2 with the concave of the transmission case, install the piston to the case.

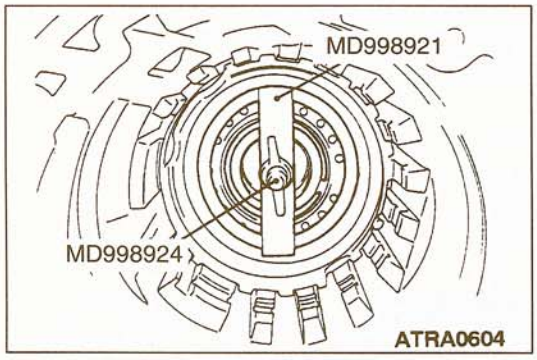


### ▶C◀ SNAP RING INSTALLATION

**Caution**
**Be sure the end gap of the snap ring is not aligned with the stopper of the spring seat.**

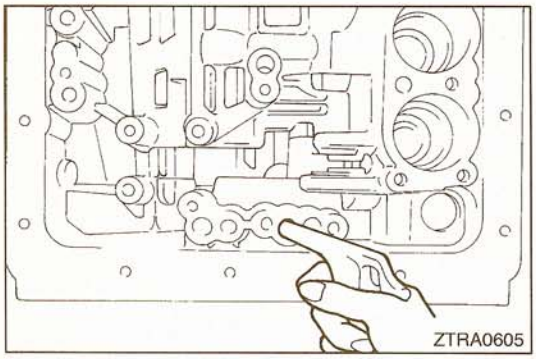


(1) After the snap ring is installed, check the operation of the first & reverse brake piston as follows:
(2) By applying compressed air (400–800 kPa, 57–113 psi) into the oil hole of the transmission case as illustrated, check that the first & reverse brake piston slides smooth!

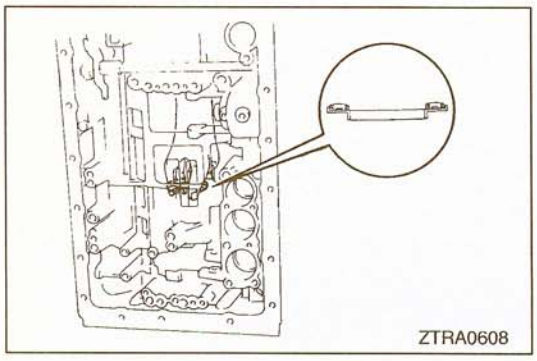


### ▶D◀ THRUST BEARING WITH RACE INSTALLATION

(1) Apply petrolatum to the thrust bearing with race and attach it so that the race side is oriented to the transmission case side.

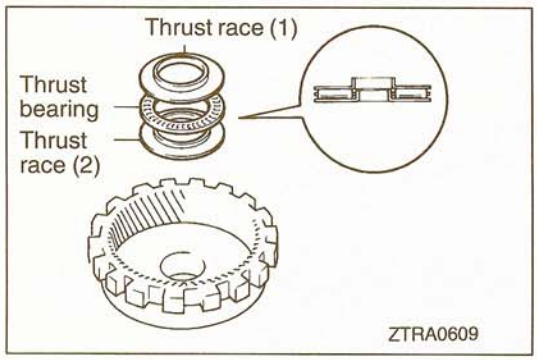


### ▶E◀ THRUST RACE / THRUST BEARING / THRUST RACE INSTALLATION

(1) Apply petrolatum to the thrust bearing, thrust race [28.8 mm (1.13 in.) in inner diameter] and thrust race [27.6 mm (1.09 in.) in inner diameter] and attach them to the rear planetary ring gear in the illustrated order and direction.

**TSB Revision**

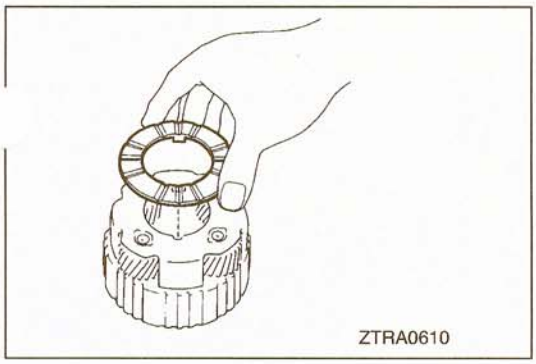


### ▶F◀ PLANETARY CARRIER THRUST WASHERS NO.1 AND NO.2 INSTALLATION

(1) Aligning the convex of the thrust washer No.1 with the hole of the rear planetary gear, install the washer to the gear.

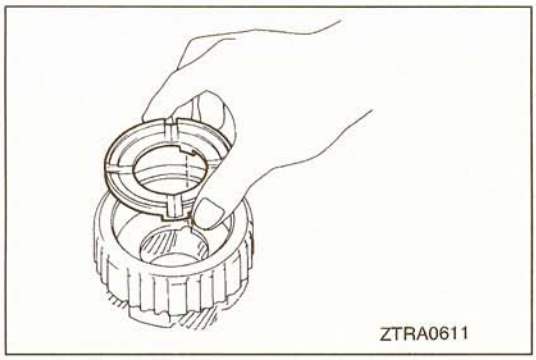


(2) Turn the rear planetary gear over. Aligning the convex of the thrust washer No.2 with the hole of the rear planetary gear, install the washer to the gear.

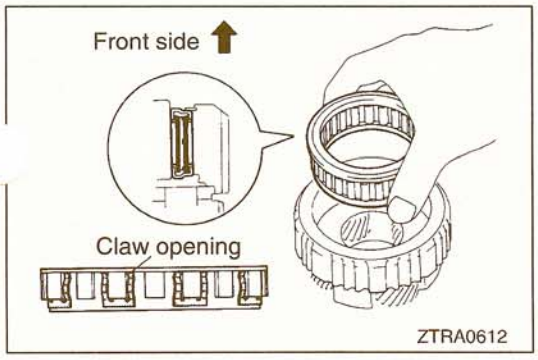


### ▶G◀ ONE-WAY CLUTCH NO.2 INSTALLATION

(1) Install the one-way clutch No.2 to the rear planetary gear in the illustrated direction.

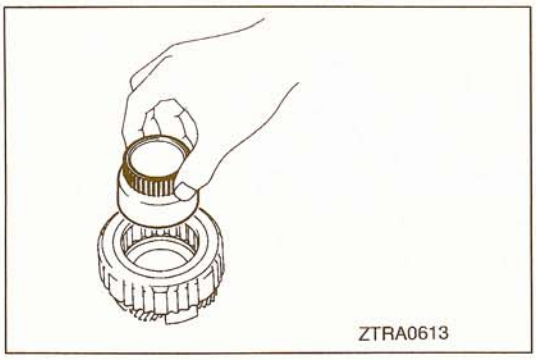


### ▶H◀ ONE-WAY CLUTCH INNER RACE INSTALLATION

(1) After the one-way clutch inner race is installed, check the operation of the one-way clutch No.2 as follows:

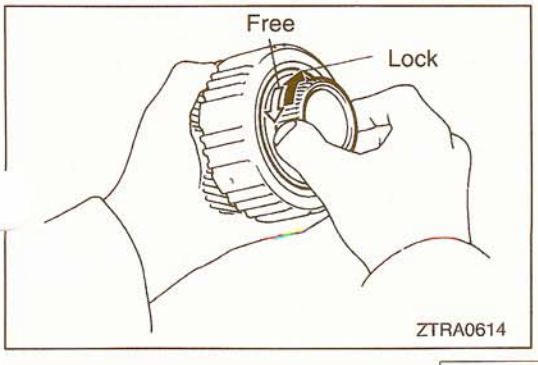


(2) While holding the rear planetary gear, turn the one-way clutch clockwise to see that the clutch is locked and turn it counterclockwise to see that the clutch turns.

NOTE

(1) If the one-way clutch turns or locks in both directions, replace the one-way clutch.
(2) If the one-way clutch turns clockwise while it doesn't counterclockwise, the one-way clutch may have been assembled in the reverse direction.

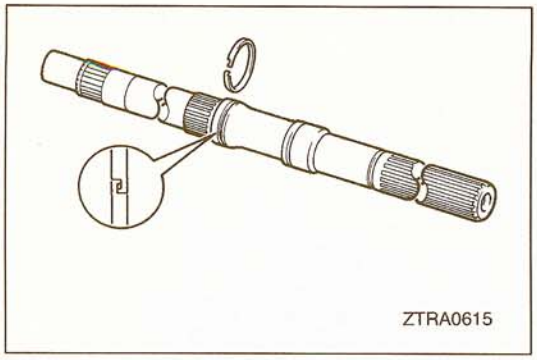
ZTRA0615

### ▶I◀ SEAL RING INSTALLATION

(1) Apply ATF to the seal ring and attach it to the output shaft.

**Caution**
**1. Do not bend the claw of the seal ring.**
**2. Do not open the seal ring wider than necessary.**

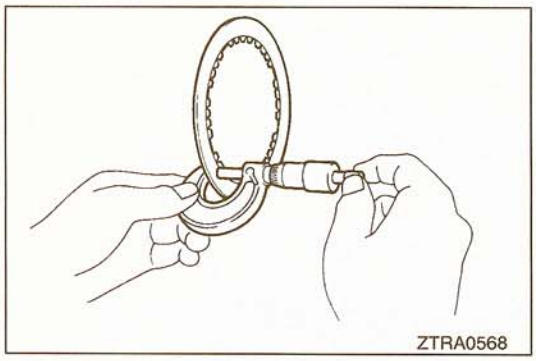
ZTRA0568

## INSPECTION

23301100010

### FIRST & REVERSE BRAKE DISC

(1) Using a micrometer, measure the thickness of the brake disc.

**Limit: 1.51 mm (.0594 in.)**

NOTE
The thickness must be measured at two or three points. Compare the average value with the limit.

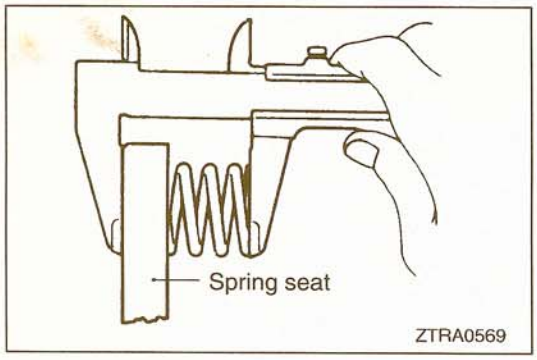

ZTRA0569

### RETURN SPRING ASSEMBLY

(1) Measure the free length of the spring including the spring seat.

**Standard value: Approx. 13.09 mm (.5154 in.)**

# SECOND COAST BRAKE PISTON

23302380017

## DISASSEMBLY AND REASSEMBLY

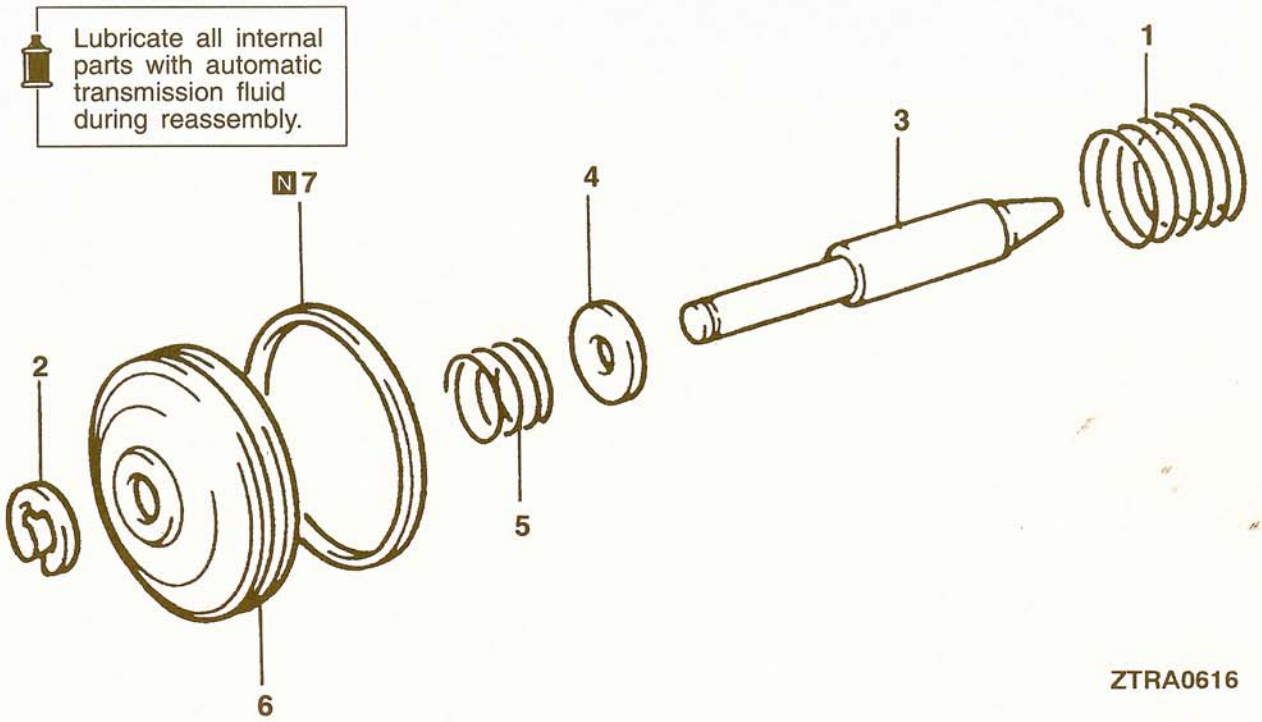


**Disassembly steps**

1. Spring
2. E-ring
3. Second coast brake piston rod
4. Plate washer
5. Spring
6. Second coast brake piston
7. Seal ring

TSB Revision

# VALVE BODY

23301210034

## DISASSEMBLY AND REASSEMBLY

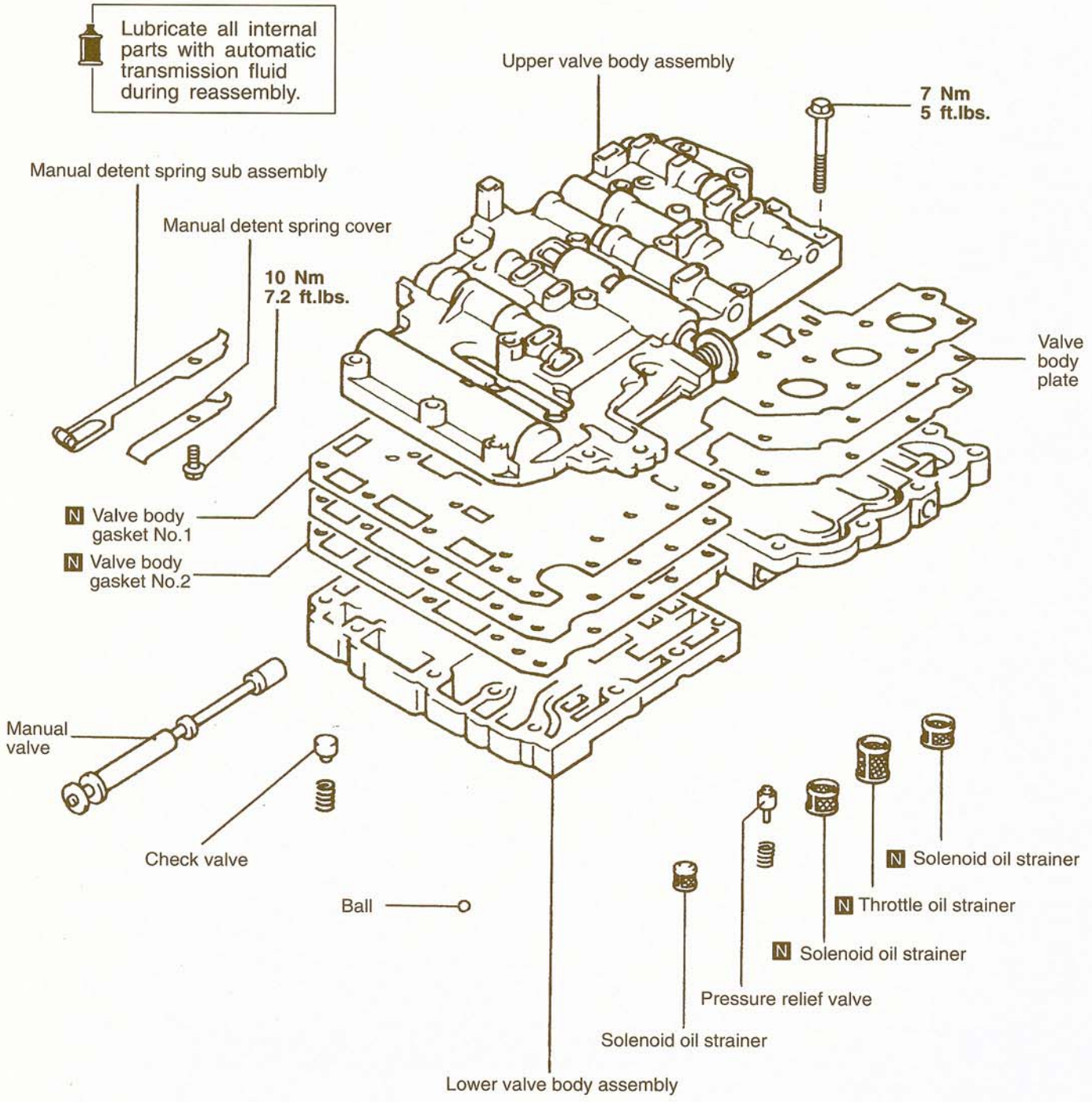


ZTRA0617

TSB Revision

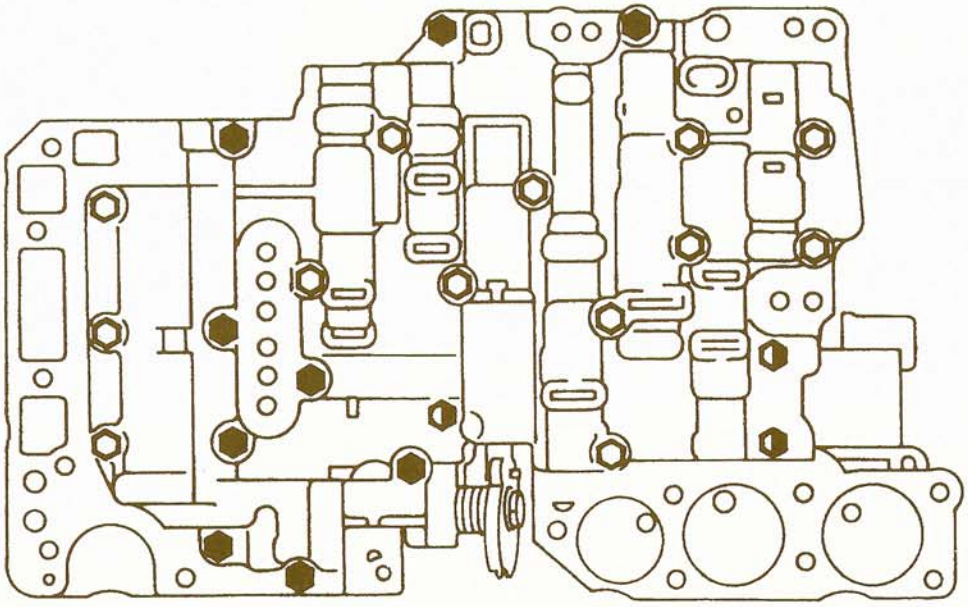


ZTRA0618

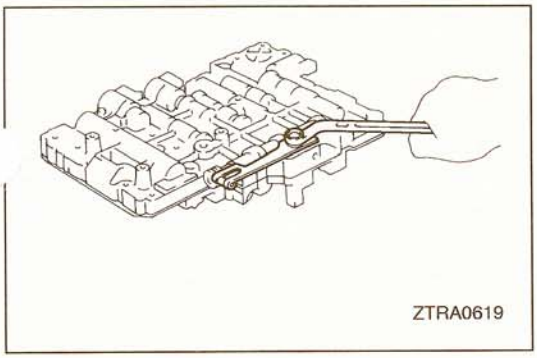

ZTRA0619

## DISASSEMBLY

(1) Remove the bolt and then remove the detent spring and cover.

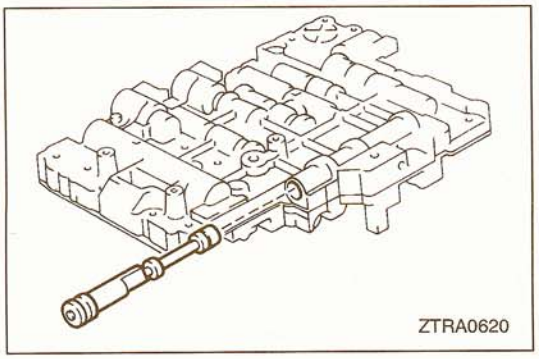

ZTRA0620

(2) Remove the manual valve from the lower valve body.

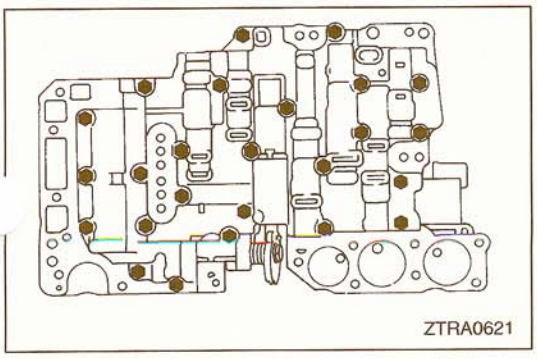

ZTRA0621

(3) Using a deep socket wrench [8 mm (.31 in.)], remove the 25 bolts from the upper valve body.

**TSB Revision**

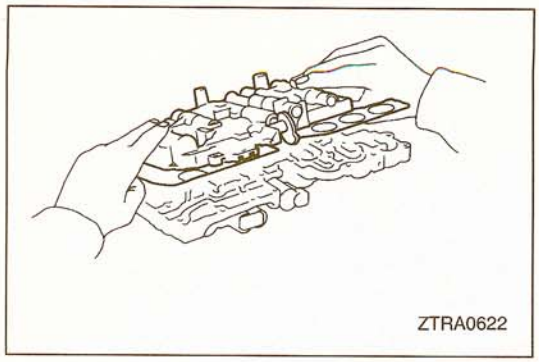
ZTRA0622

(4) Separate the upper valve body from the lower valve body by pushing the valve body plate and gasket toward the upper valve body.
(5) Place the upper valve body on the workbench with th side having the gasket and plate upward.

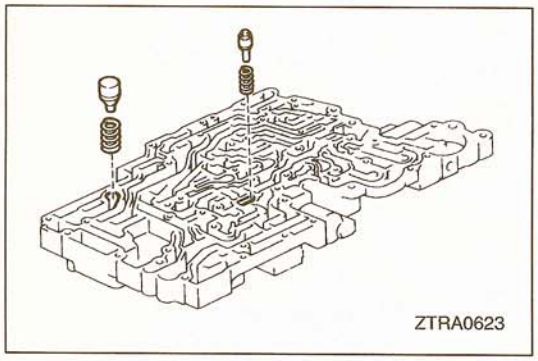
ZTRA0623

(6) Remove the check valve and spring from the lower valve body.
(7) Remove the pressure relief valve and spring from the lower valve body.

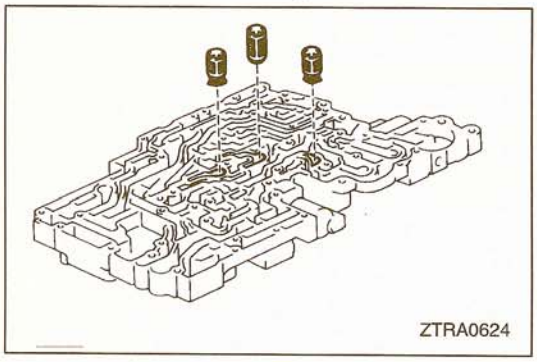
ZTRA0624

(8) Remove the three strainers from the lower valve body.

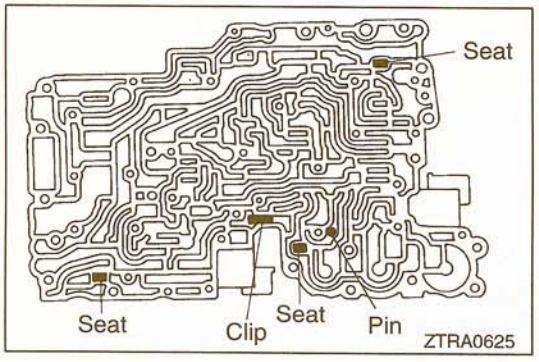

ZTRA0625

(9) Check that the three seats, one pin and one clip are in position on the lower valve body.

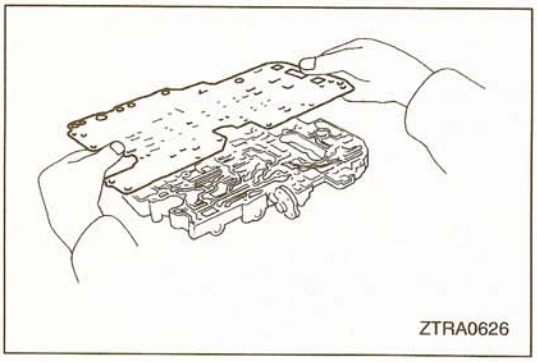
ZTRA0626

(10) Remove the two valve body gaskets and the plate from the upper valve body.

**TSB Revision**

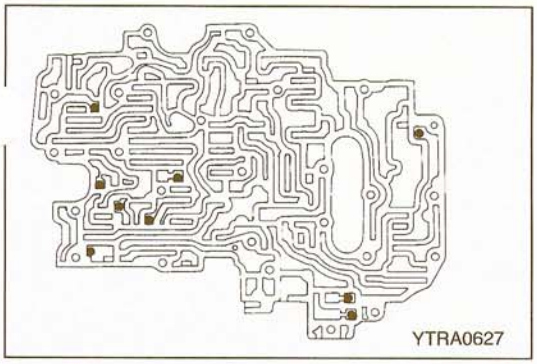


(11) Remove the 9 balls from the upper valve body.

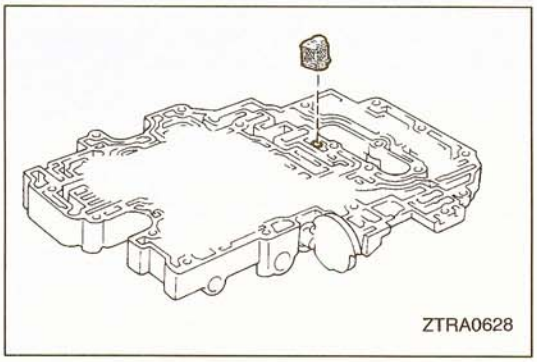


(12) Remove the strainer from the upper valve body.

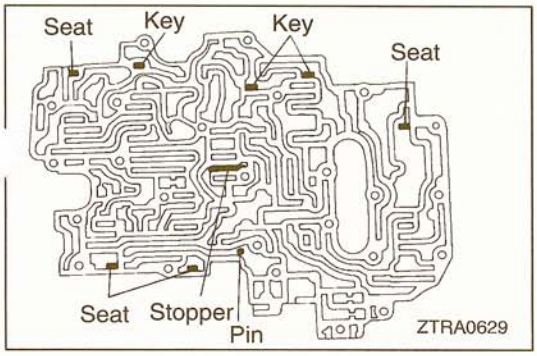


(13) Check that the one pin, four seats, three keys and one vibrating stopper are all in position.

## REASSEMBLY

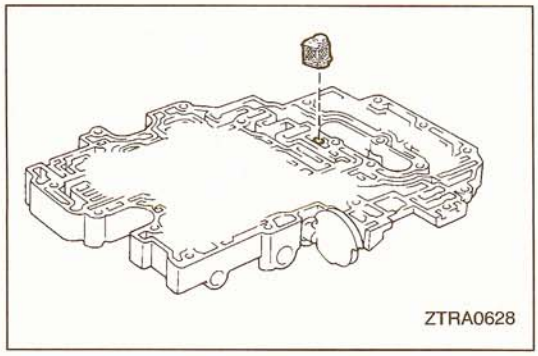


(1) Install the solenoid oil strainer to the upper valve body.

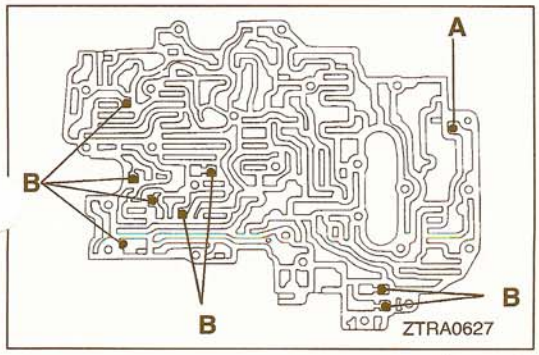


(2) Install two types of 9 balls to the upper valve body.

mm (in.)

| Place | Outer diameter |
|---|---|
| Rubber ball A | 6.35 (2.500) |
| Rubber ball B | 5.56 (2.189) |

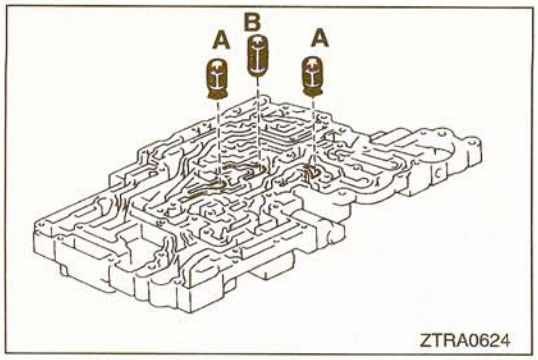


(3) Install the two solenoid oil strainers and one throttle oil strainer to the lower valve body.

mm (in.)

| Type | Outer diameter | Height |
|---|---|---|
| Solenoid oil strainer A | 10.2 – 10.4 (.401 – .409) | 12.2 – 12.6 (.480 – .488) |
| Throttle oil strainer B | 10.2 – 10.4 (.401 – .409) | 19.3 – 19.7 (.760 – .776) |

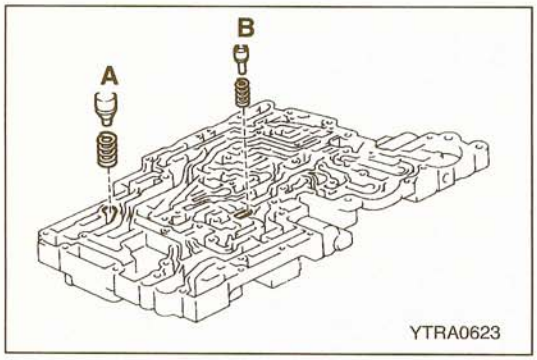


(4) Install the two springs and then the check valve and pressure relief valve to the lower valve body.

**Spring**

mm (in.)

| Place | Free height | Outside diameter | Number of loops | Wire diameter |
|---|---|---|---|---|
| Check valve | 17.53 (.6902) | 12.1 (.476) | 3.2 | 1.1 (.043) |
| Relief valve | 11.2 (.441) | 6.4 (.252) | 7.5 | 0.9 (.035) |

**Valve**

mm (in.)

| Type | Outer diameter | Height |
|---|---|---|
| Check valve A | 12.8 (.504) | 17.5 (.689) |
| Presure relief valve B | 6.7 (.264) | 16.5 (.650) |

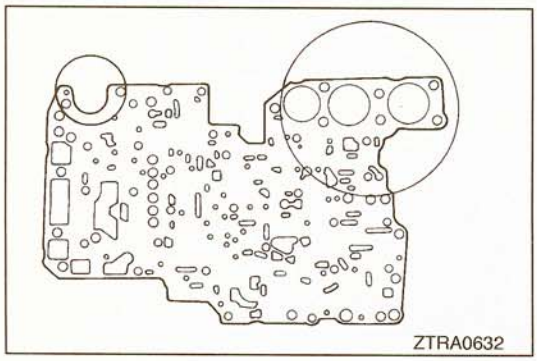


(5) In alignment with the bolt holes, install a new valve body gasket No.1 on the upper valve body.
(6) In alignment with the bolt holes, put the plate on the gasket No.1.

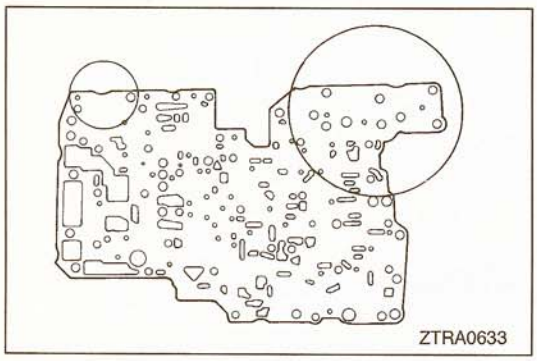


(7) Put a new valve body gasket No.2 on the plate.

**TSB Revision**

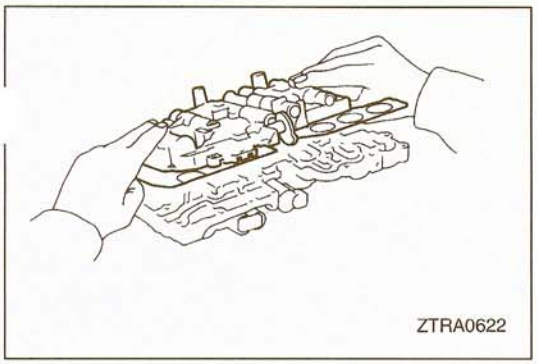
ZTRA0622

(8) While pushing the gaskets and the plate against the upper valve body, put the upper valve body on the lower valve body.

**Caution**
**Be careful not to drop the check balls and strainers from the upper valve body.**

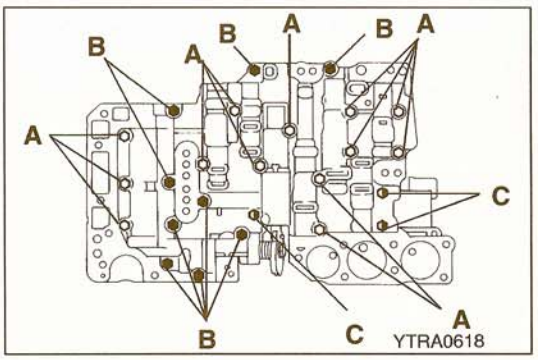

YTRA0618

(9) Insert the 25 bolts from the upper valve body side.

A: 38 mm (1.50 in.)
B: 20 mm (.79 in.)
C: 28 mm (1.10 in.)

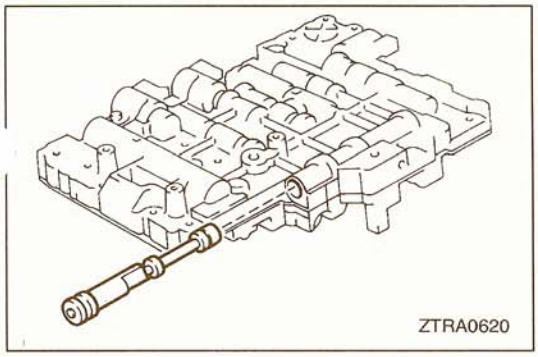
ZTRA0620

(10) Install the manual valve to the lower valve body.

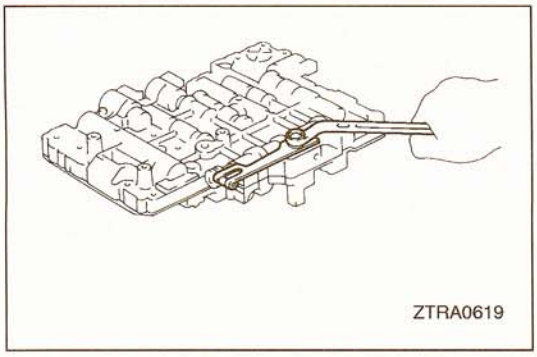
ZTRA0619

(11) Install the detent spring and cover by tightening the bolt.

# UPPER VALVE BODY

23301270025

## DISASSEMBLY AND REASSEMBLY

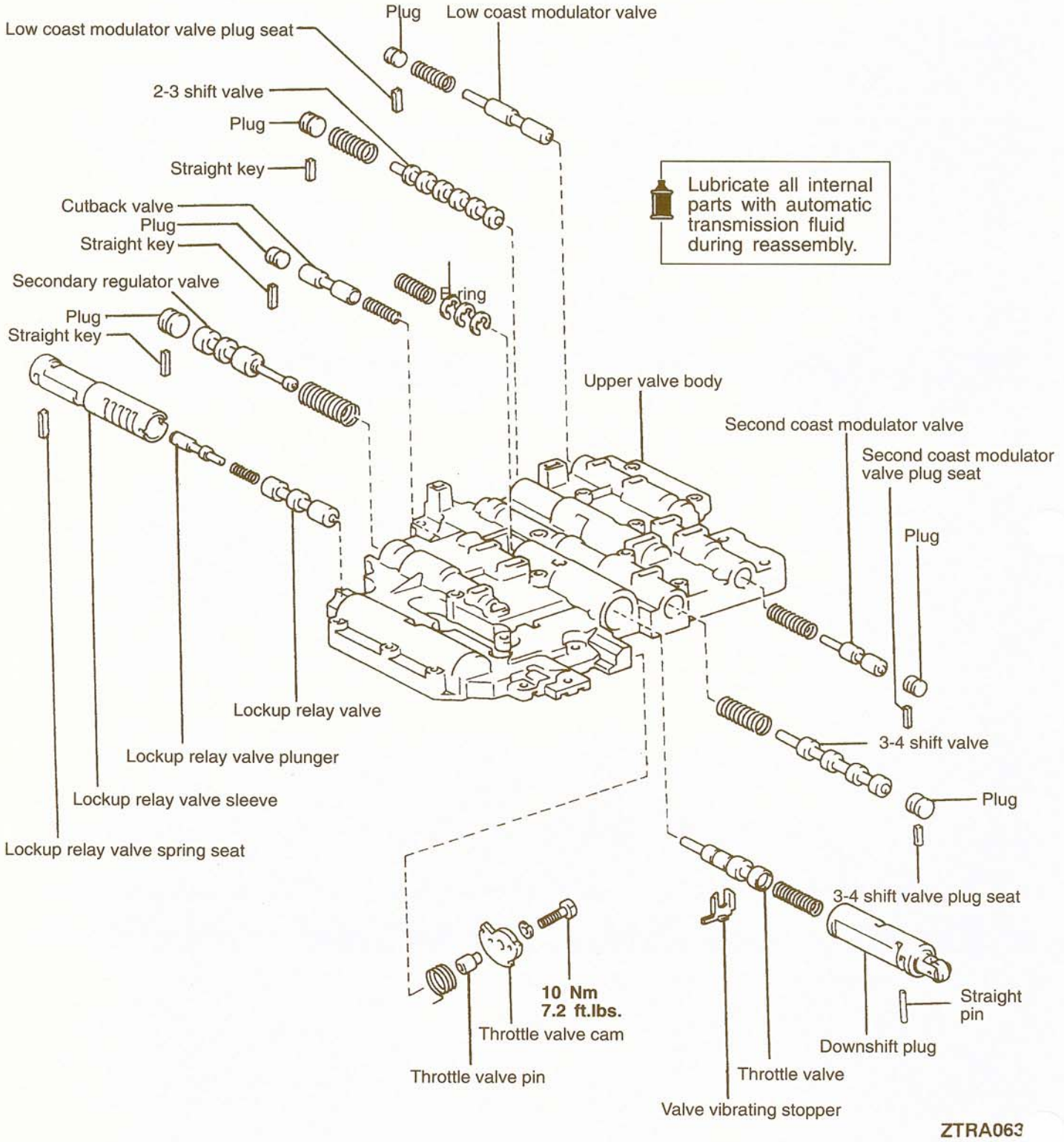


TSB Revision

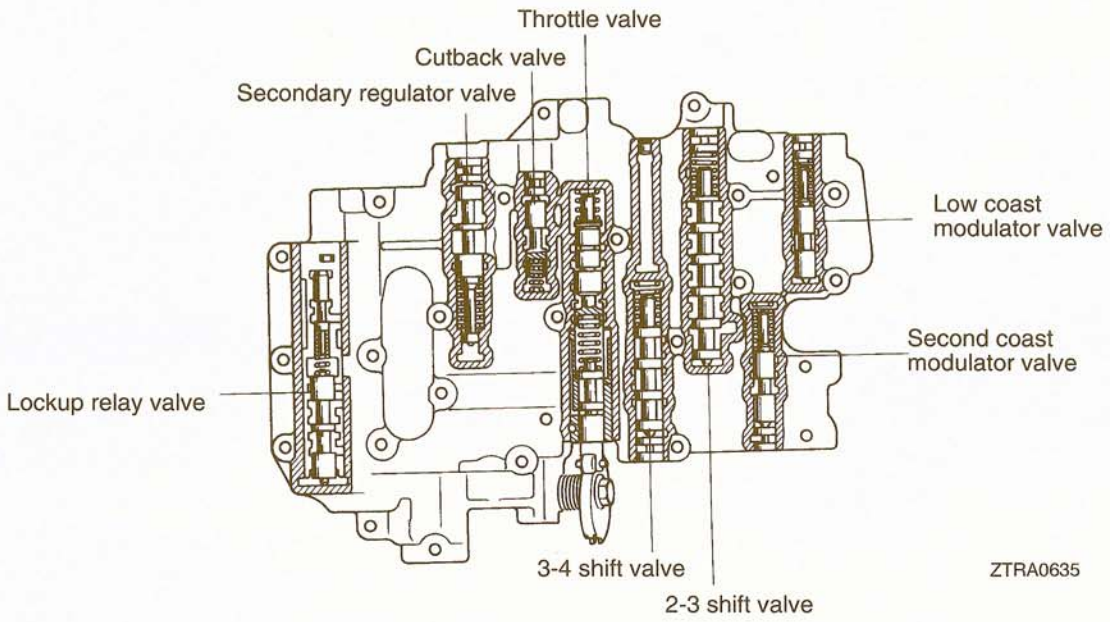


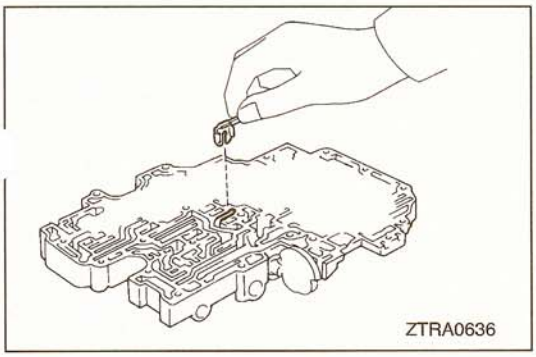


## DISASSEMBLY

(1) Remove the valve vibrating stopper.

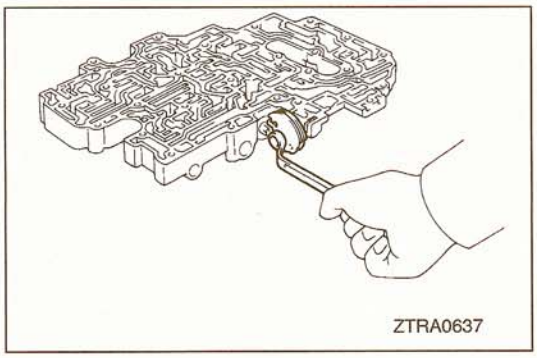


(2) Remove the bolt and washer and then the throttle valve cam, pin and spring.

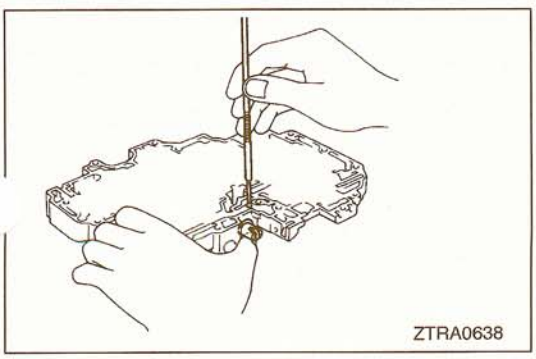


(3) While pushing the downshift plug with a finger, use a magnet to remove the pin.

**TSB Revision**

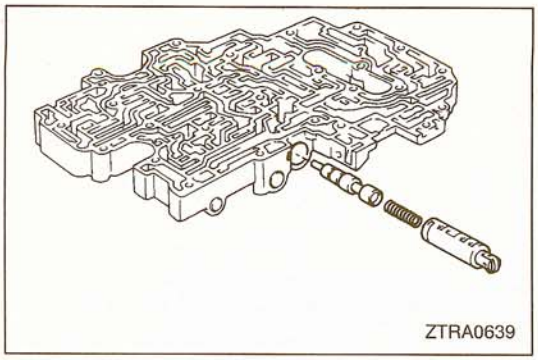
ZTRA0639

(4) Remove the downshift plug, spring and throttle valve.

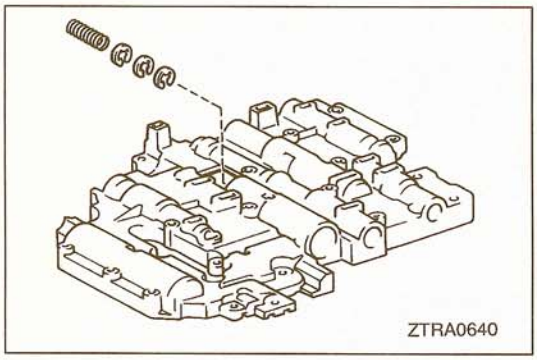
ZTRA0640

(5) Remove the spring and E-rings from the rear of the valve body.

**Caution**
**Because the throttle pressure changes depending on the number of E-rings, remember how many E-rings have been used (sometimes zero).**

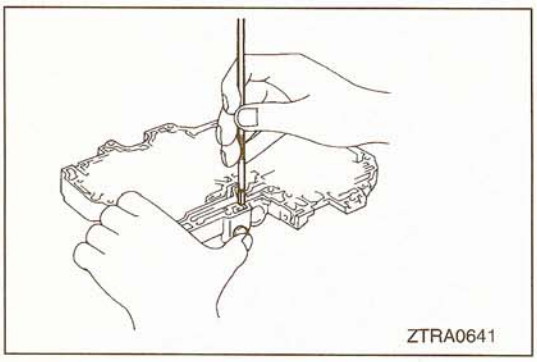
ZTRA0641

(6) While pushing the plug with a finger, use a magnet to remove the seat.

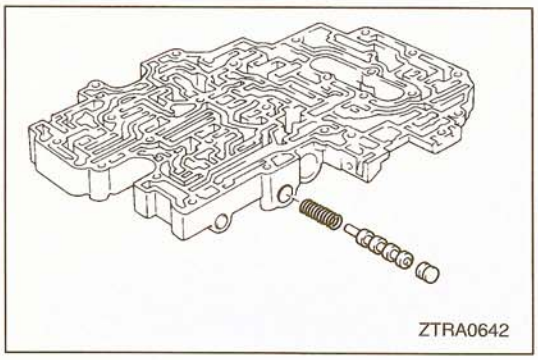
ZTRA0642

(7) Remove the plug, 3-4 shift valve and spring.

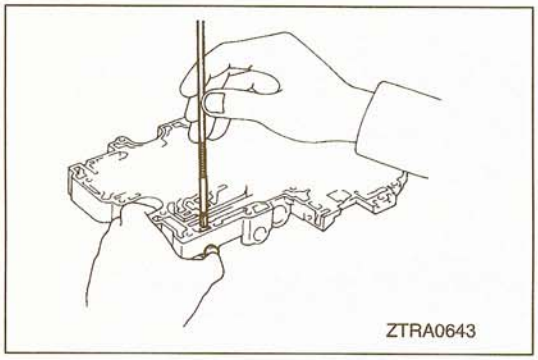
ZTRA0643

(8) While pushing the plug with a finger, use a magnet to remove the seat.

**TSB Revision**

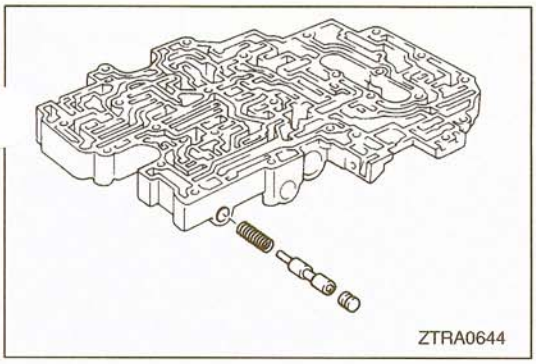


(9) Remove the plug, second coast modulator valve and spring.

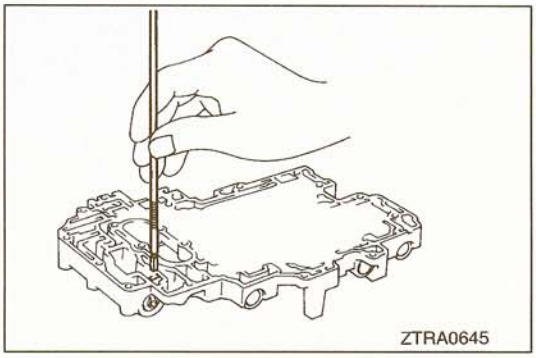


(10) Using a magnet, remove the seat.

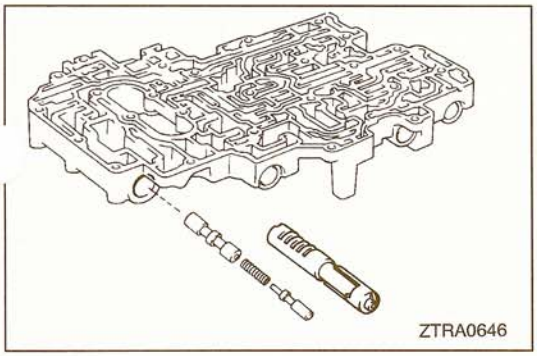


(11) Remove the lockup relay valve sleeve, lockup relay plunger, spring and lockup relay valve together.
(12) Remove the lockup relay valve, spring and lockup relay valve plunger from the lockup relay valve sleeve.

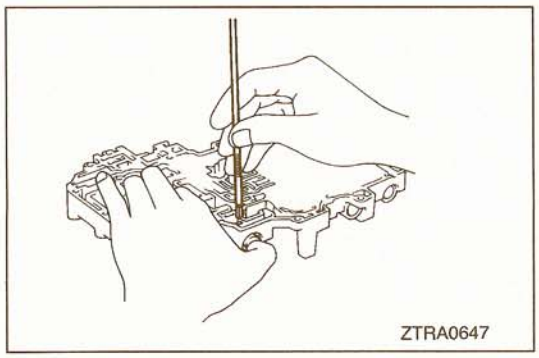


(13) While pushing the plug with a finger, use a magnet to remove the key.

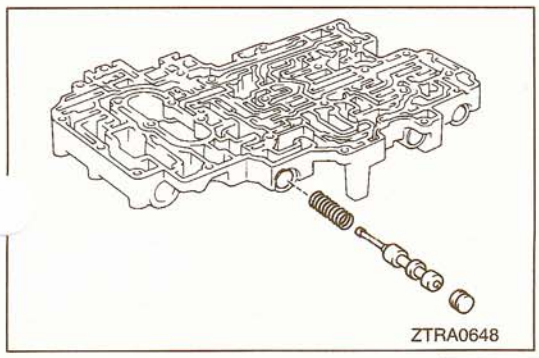


(14) Remove the plug, second regulator valve and spring.

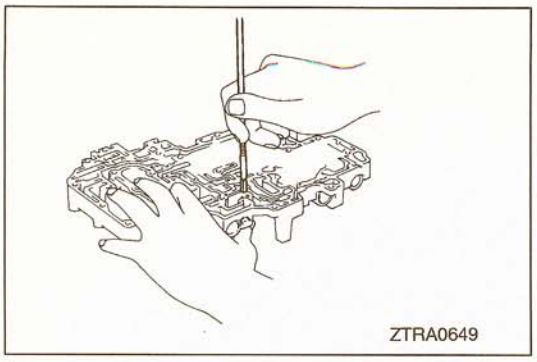
ZTRA0649

(15)While pushing the plug with a finger, use a magnet to remove the key.

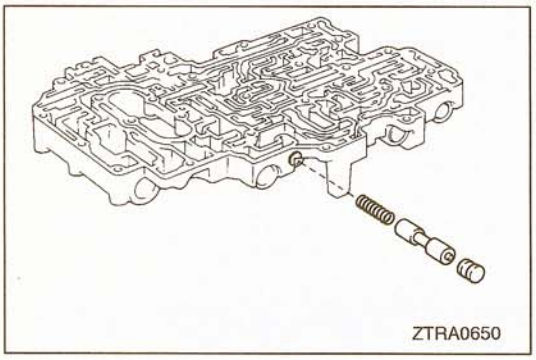
ZTRA0650

(16)Remove the plug, cutback valve and spring.

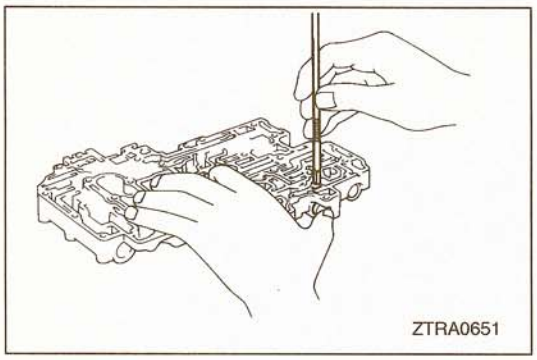
ZTRA0651

(17)While pushing the plug with a finger, use a magnet to remove the key.

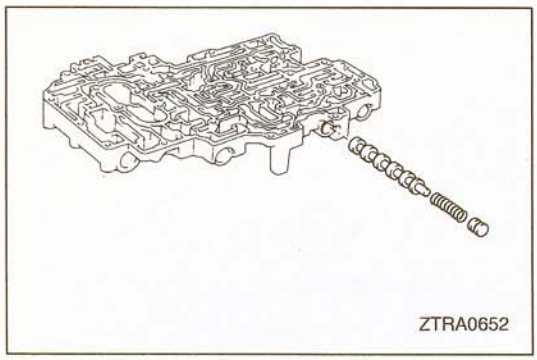
ZTRA0652

(18)Remove the plug, spring and 2-3 shift valve.

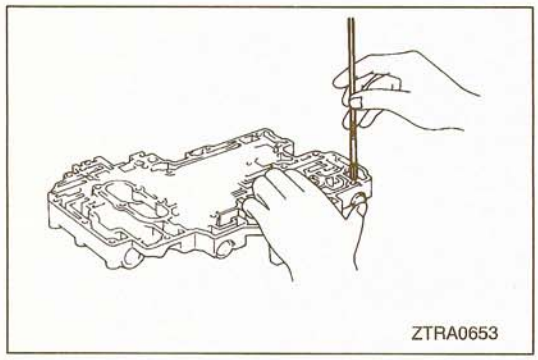
ZTRA0653

(19)While pushing the plug with a finger, use a magnet to remove the seat.

**TSB Revision**

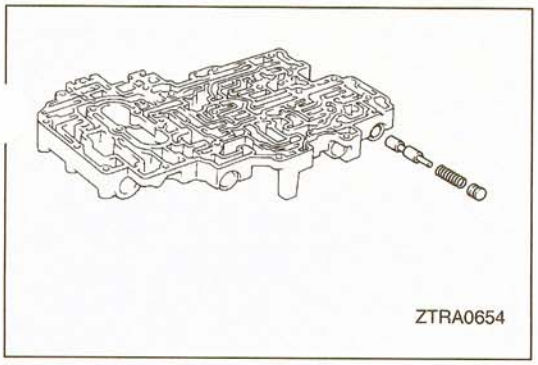
ZTRA0654

(20) Remove the plug, spring and low coast modulator valve.

## REASSEMBLY

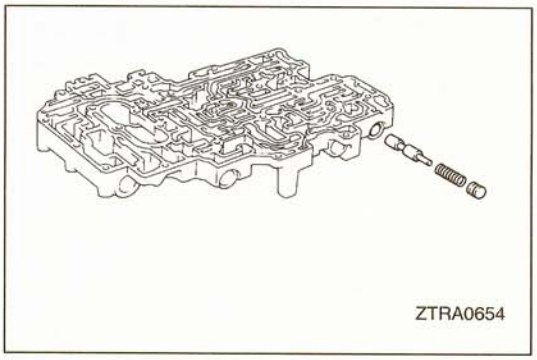
ZTRA0654

(1) Install the low coast modulator valve, spring and plug as illustrated.
(2) While pushing the plug with a finger, install the seat.

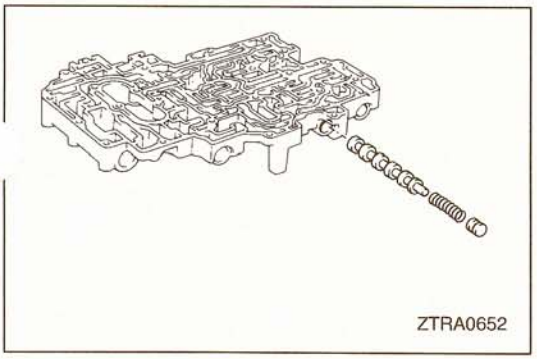
ZTRA0652

(3) Install the 2-3 shift valve, spring and plug as illustrated.
(4) While pushing the plug with a finger, install the key.

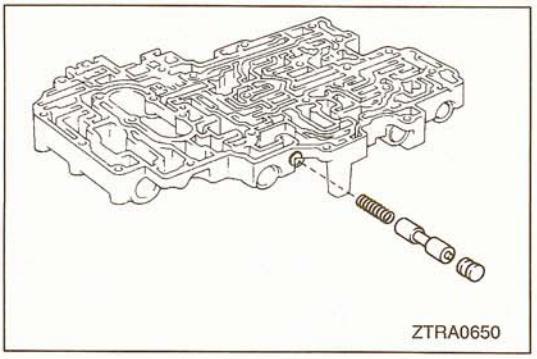
ZTRA0650

(5) Install the spring, cutback valve and plug as illustrated.
(6) While pushing the plug with a finger, install the key.

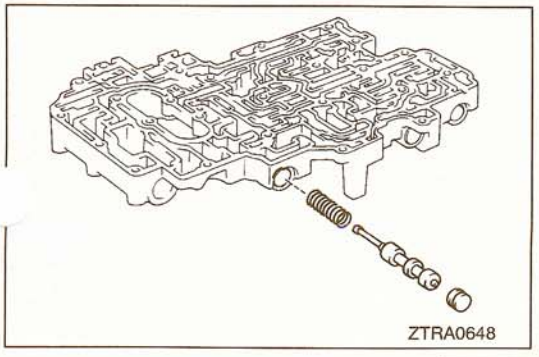
ZTRA0648

(7) Install the spring, secondary regulator valve and plug as illustrated.
(8) While pushing the plug with a finger, install the key.

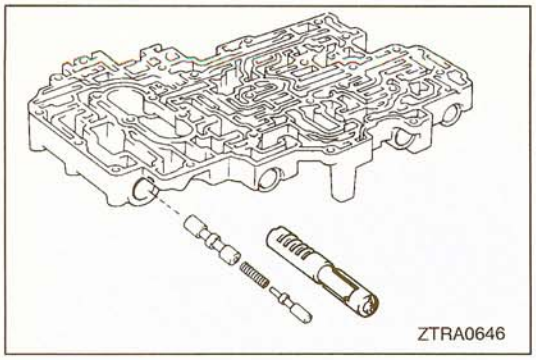
ZTRA0646

(9) Install the lockup relay valve plunger and spring to the lockup relay valve sleeve as illustrated.
(10) Install the lockup relay valve to the lockup relay valve sleeve.
(11) Install the lockup relay valve sleeve, lockup relay valve, spring, and lockup relay valve plunger together as illustrated.
(12) Install the seat.

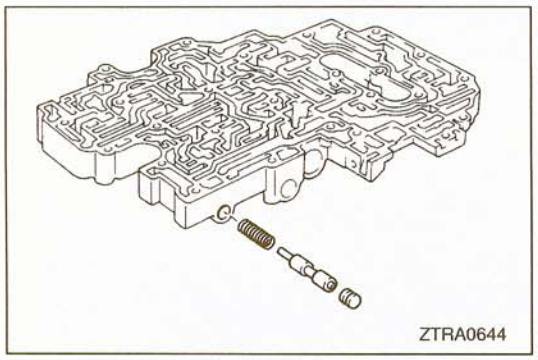
ZTRA0644

(13) Install the spring, second coast modulator valve and plug as illustrated.
(14) While pushing the plug with a finger, install the seat.

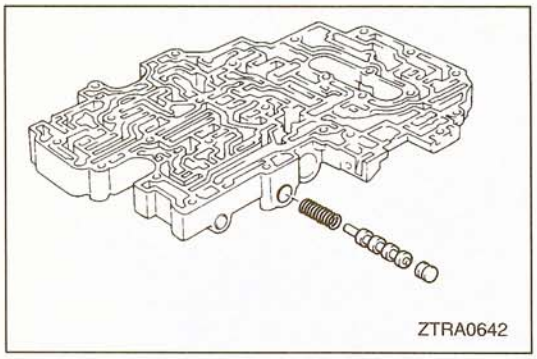
ZTRA0642

(15) Install the spring, 3-4 shift valve and plug as illustrated.
(16) While pushing the plug with a finger, install the seat.

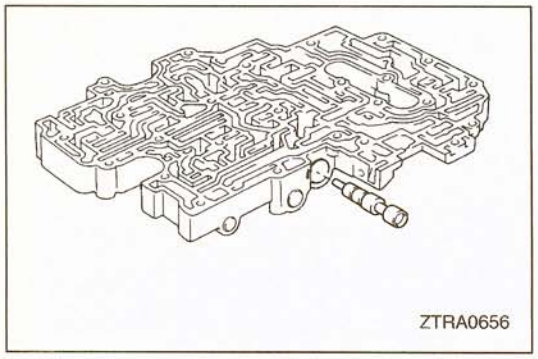
ZTRA0656

(17) Install the throttle valve to the valve body as illustrated.

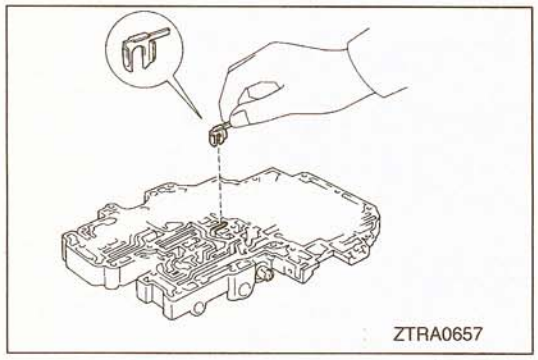
ZTRA0657

(18) Install the valve vibrating stopper in the illustrated position.

**TSB Revision**

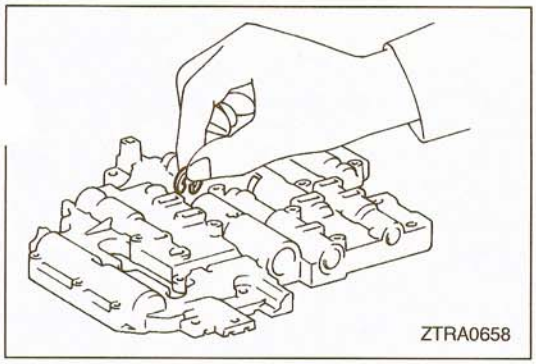
ZTRA0658

(19)With the valve vibrating stopper held with a finger, turn the valve body over. Install the E-rings to the throttle valve.

**Caution**
**The number of E-rings to be installed must be equal to that of the E-rings which were removed.**

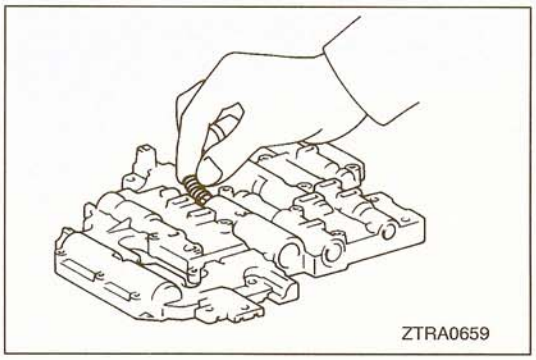
ZTRA0659

(20)Install the spring to the throttle valve.

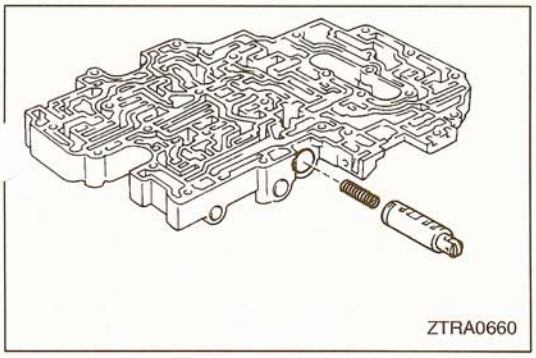
ZTRA0660

(21)Turn the valve body over again. Install the spring and downshift valve as illustrated.
(22)While pushing the downshift valve with a finger, install the pin.

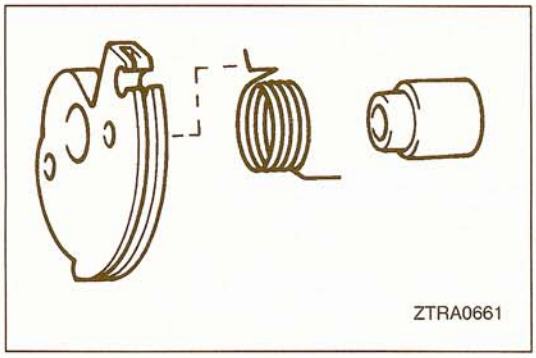
ZTRA0661

(23)Install the spring and collar to the throttle valve cam.

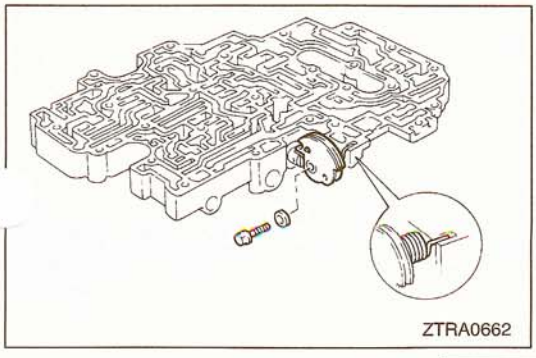
ZTRA0662

(24)Install the throttle valve cam to the valve body and check that the spring is anchored to the valve body by the claw.
(25)Tighten the bolt together with the washer.

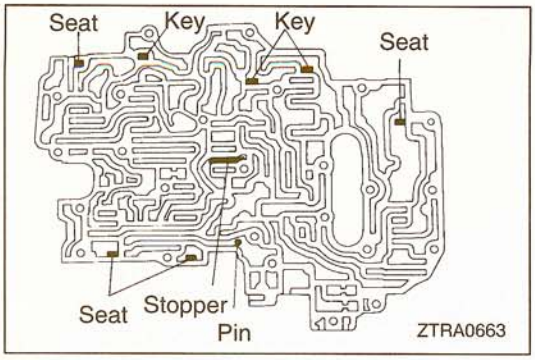


(26) Check that the one pin, four seats, three keys and one vibrating stopper are installed as illustrated.

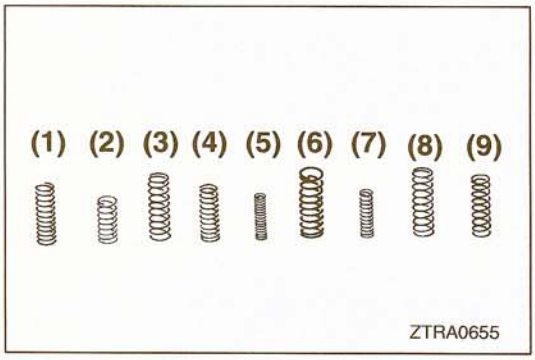


## INSPECTION

23301280028

### VALVE SPRING

(1) Check the free height and outside diameter of each spring.

**Standard value**

| Place | Free height | Outside diameter | Number of loops | Wire diameter |
|---|---|---|---|---|
| (1) Downshift plug | 27.3 (1.075) | 8.7 (.343) | 10.5 | 1.0 (.039) |
| (2) Throttle valve | 20.6 (.811) | 9.2 (.362) | 7.5 | 0.7 (.028) |
| (3) 3-4 shift valve | 30.8 (1.213) | 9.7 (.381) | 8.5 | 0.9 (.035) |
| (4) Second coast modulator valve | 30.9 (1.217) | 8.6 (.339) | 9.5 | 1.1 (.043) |
| (5) Lockup relay valve | 21.4 (.843) | 5.5 (.217) | 15.5 | 0.6 (.024) |
| (6) Secondary regulator valve | 30.9 (1.217) | 11.2 (.441) | 8.5 | 1.5 (.059) |
| (7) Cutback valve | 21.8 (.858) | 6.0 (.236) | 11.5 | 0.6 (.024) |
| (8) 2-3 shift valve | 30.8 (1.213) | 9.7 (.381) | 8.5 | 0.9 (.035) |
| (9) Low coast modulator valve | 30.4 (1.197) | 8.3 (.327) | 8.5 | 0.8 (.031) |

Unit of free height, outside diameter and wire diameter: mm (in.)

# LOWER VALVE BODY

23301240033

## DISASSEMBLY AND REASSEMBLY

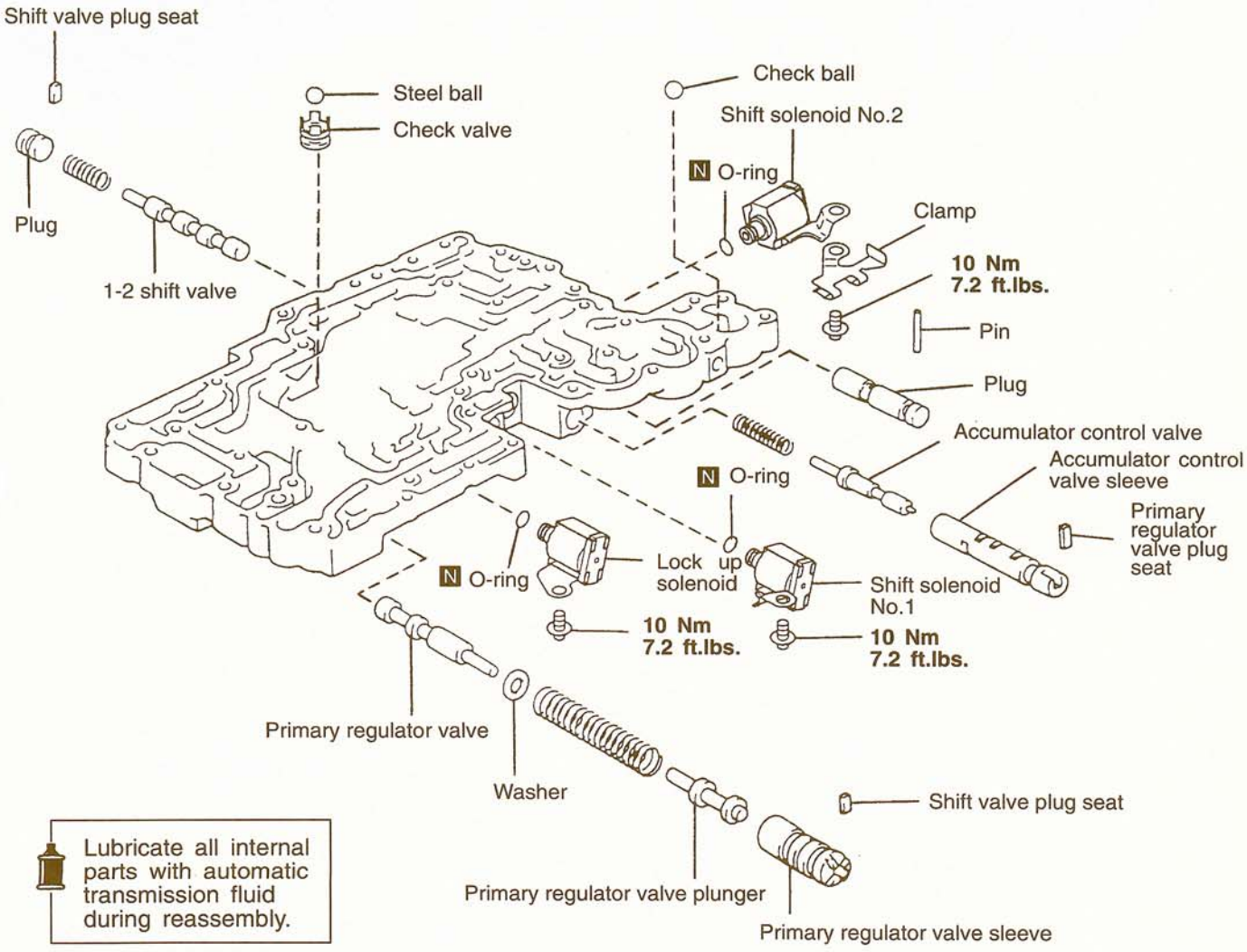


ATRA0923

TSB Revision

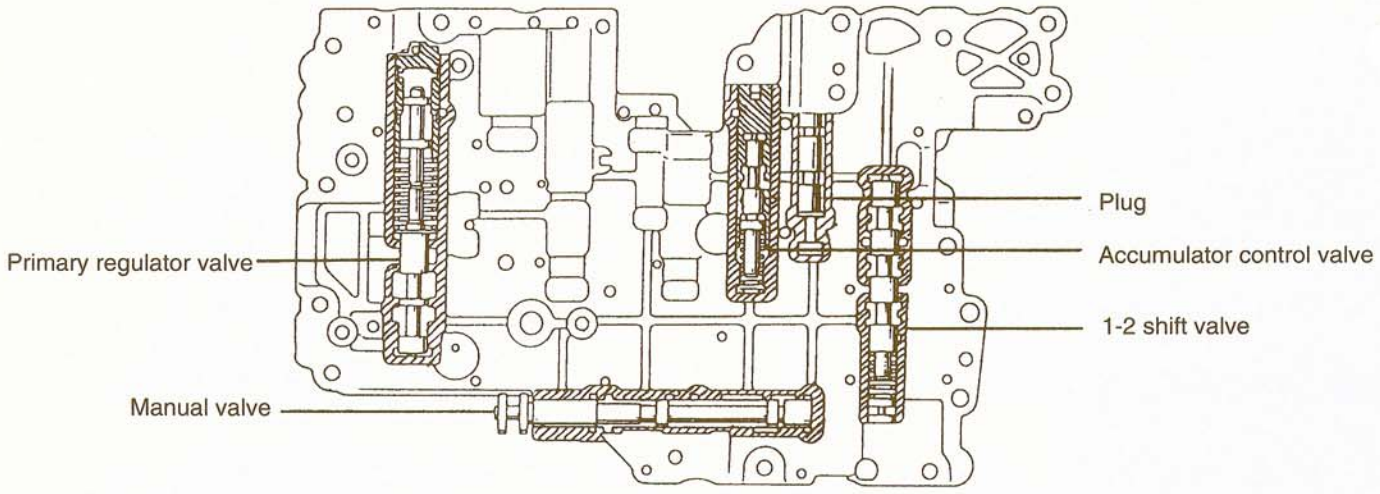


ATRA0925

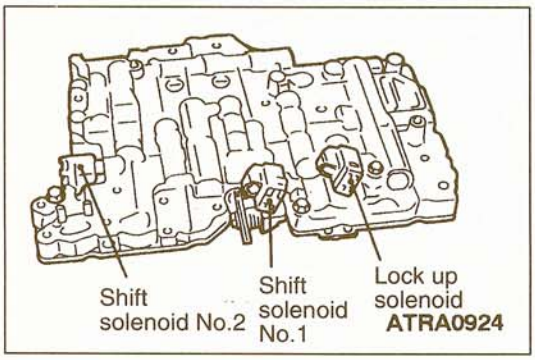


ATRA0924

## DISASSEMBLY

(1) Remove the steel ball and the check ball.
(2) Remove the check ball.
(3) Remove each bolt and then remove the shift solenoids No.1, No.2 and lock up solenoid.
(4) Remove the O-ring from each solenoid.

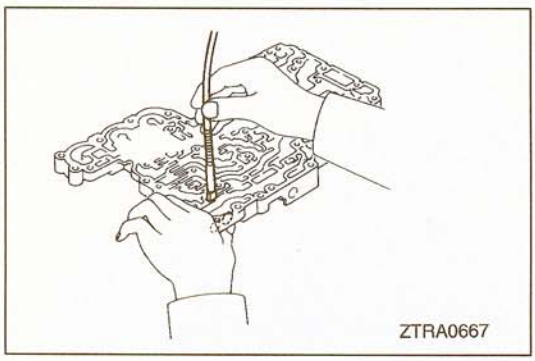

ZTRA0667

(5) While pushing the plug with a finger, use a magnet to remove the seat.

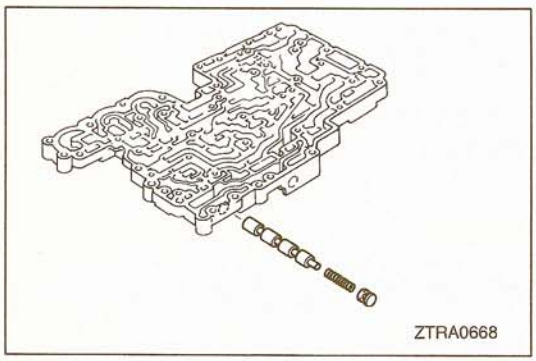

ZTRA0668

(6) Remove the plug, spring and 1-2 shift valve.

TSB Revision

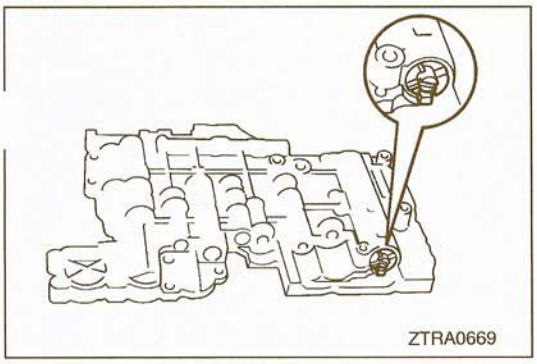
ZTRA0669

(7) Examine which groove of the primary regulator valve sleeve engages with the seat.

**Caution**
**Because this has influence on the line pressure, make a note of it.**

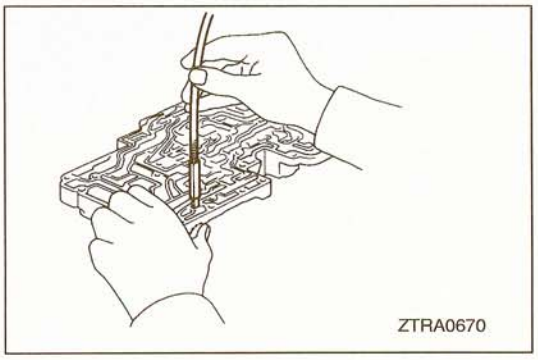
ZTRA0670

(8) While pushing the sleeve with a finger, use a magnet to remove the seat.

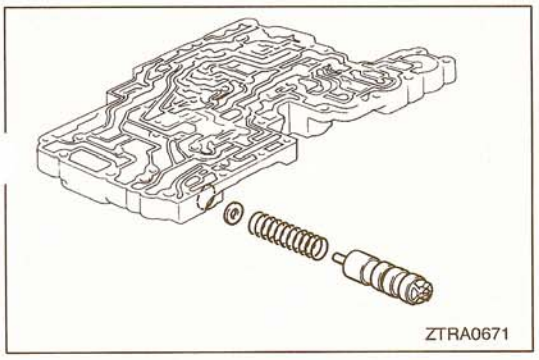
ZTRA0671

(9) Remove the primary regulator valve sleeve and primary regulator valve plunger together and then remove the spring, washer and primary regulator valve.
(10) Remove the primary regulator valve plunger from the primary regulator valve sleeve.

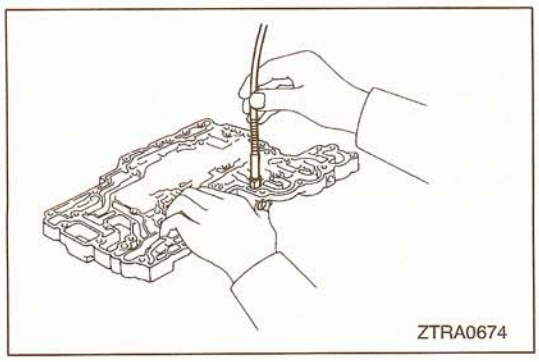
ZTRA0674

(11) While pushing the sleeve with a finger, use a magnet to remove the seat.

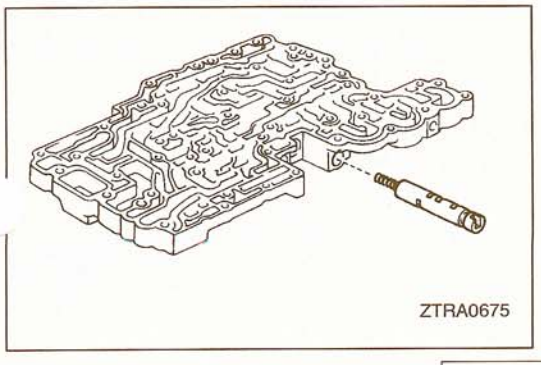
ZTRA0675

(12) Remove the accumulator control valve sleeve, accumulator control valve and spring together.
(13) Remove the spring and accumulator control valve from the accumulator control valve sleeve.

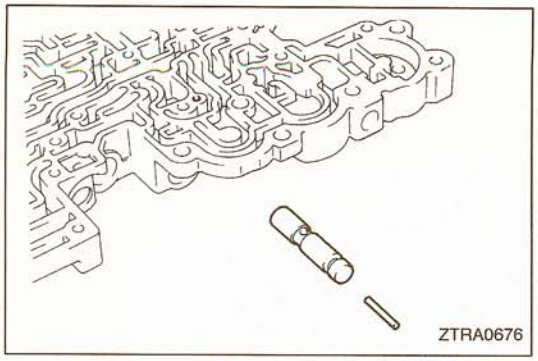


(14)Using a magnet, remove the pin.
(15)Remove the plug.

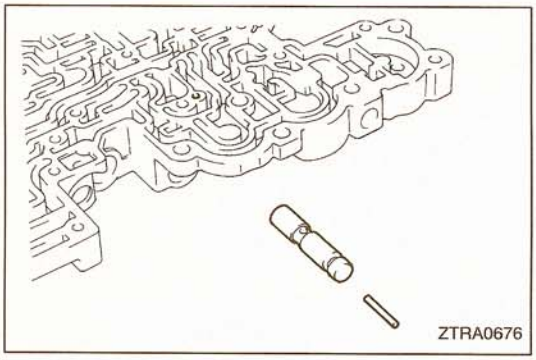


## REASSEMBLY

(1) Install the plug as illustrated.
(2) Install the pin.

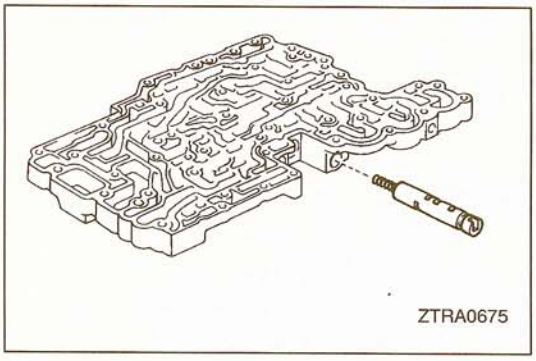


(3) Install the accumulator control valve and spring to the accumulator control valve sleeve as illustrated.
(4) Install the accumulator control valve sleeve, accumulator control valve and spring together.
(5) While pushing the accumulator control valve sleeve with a finger, install the seat.

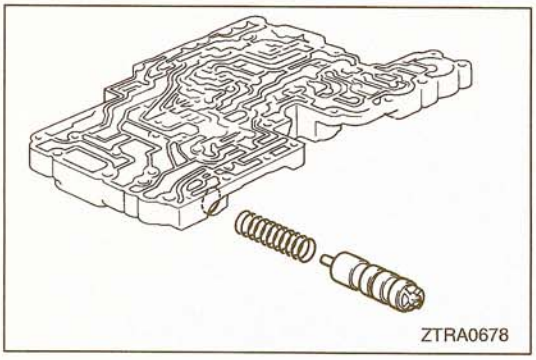


(6) Install the washer to the primary regulator valve.
(7) Install the washer and primary regulator valve together.
(8) Install the primary regulator valve plunger to the pressure regulator valve sleeve as illustrated.
(9) Install the spring, pressure regulator valve sleeve and primary regulator valve plunger together.

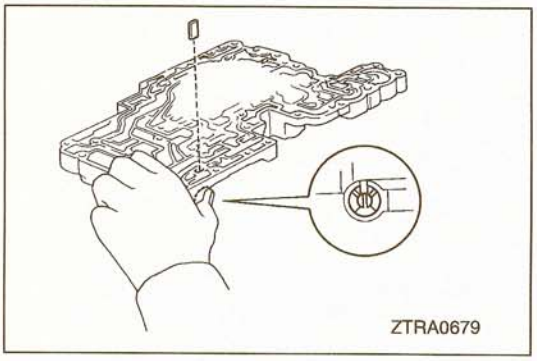


(10)While pushing the pressure regulator valve sleeve with a finger, install the seat.

**Caution**
**The seat must engage with the same groove of the primary regulator valve sleeve as before.**

**TSB Revision**

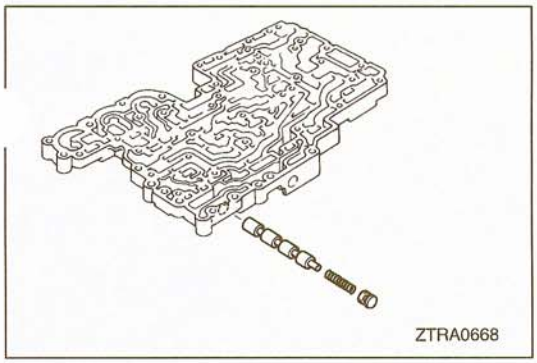


(11) Install the 1-2 shift valve, spring and plug as illustrated.
(12) While pushing the plug, install the seat.

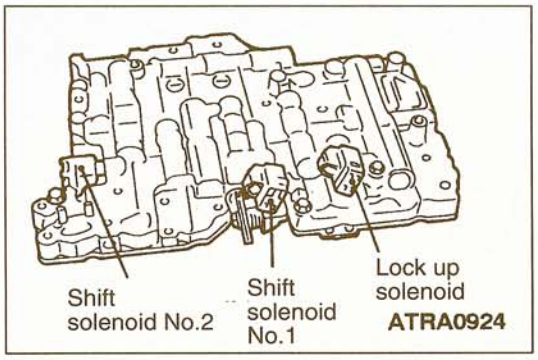


(13) Apply ATF to three new O-rings and install them to the solenoids respectively.
(14) Put the shift solenoids No.1, No.2 and lock up solenoid as illustrated and tighten the bolts.

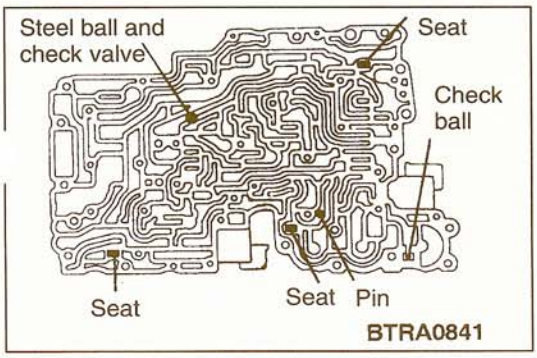


(15) Check that the three seats are installed as illustrated.
(16) Install the check ball.
(17) Install the steel ball and the check valve.

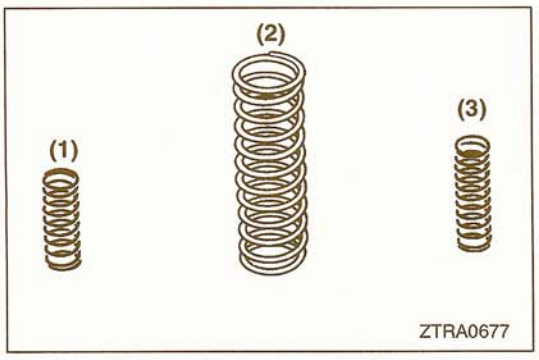


## INSPECTION

23301250029

### VALVE SPRING

(1) Check the free height and outside diameter of each spring.

**Standard value**

| Place | Free height | Outside diameter | Number of loops | Wire diameter |
|---|---|---|---|---|
| (1) 1-2 shift valve | 30.8 (1.213) | 9.7 (.381) | 8.5 | 0.9 (.035) |
| (2) primary regulator valve | 62.3 (2.453) | 18.6 (.732) | 12.5 | 1.7 (.067) |
| (3) accumulator control valve | 33.9 (1.335) | 8.8 (.346) | 10.0 | 0.8 (.031) |

Unit of free height, outside diameter and wire diameter: mm (in.)

# TRANSFER

23301330037

## DISASSEMBLY AND REASSEMBLY

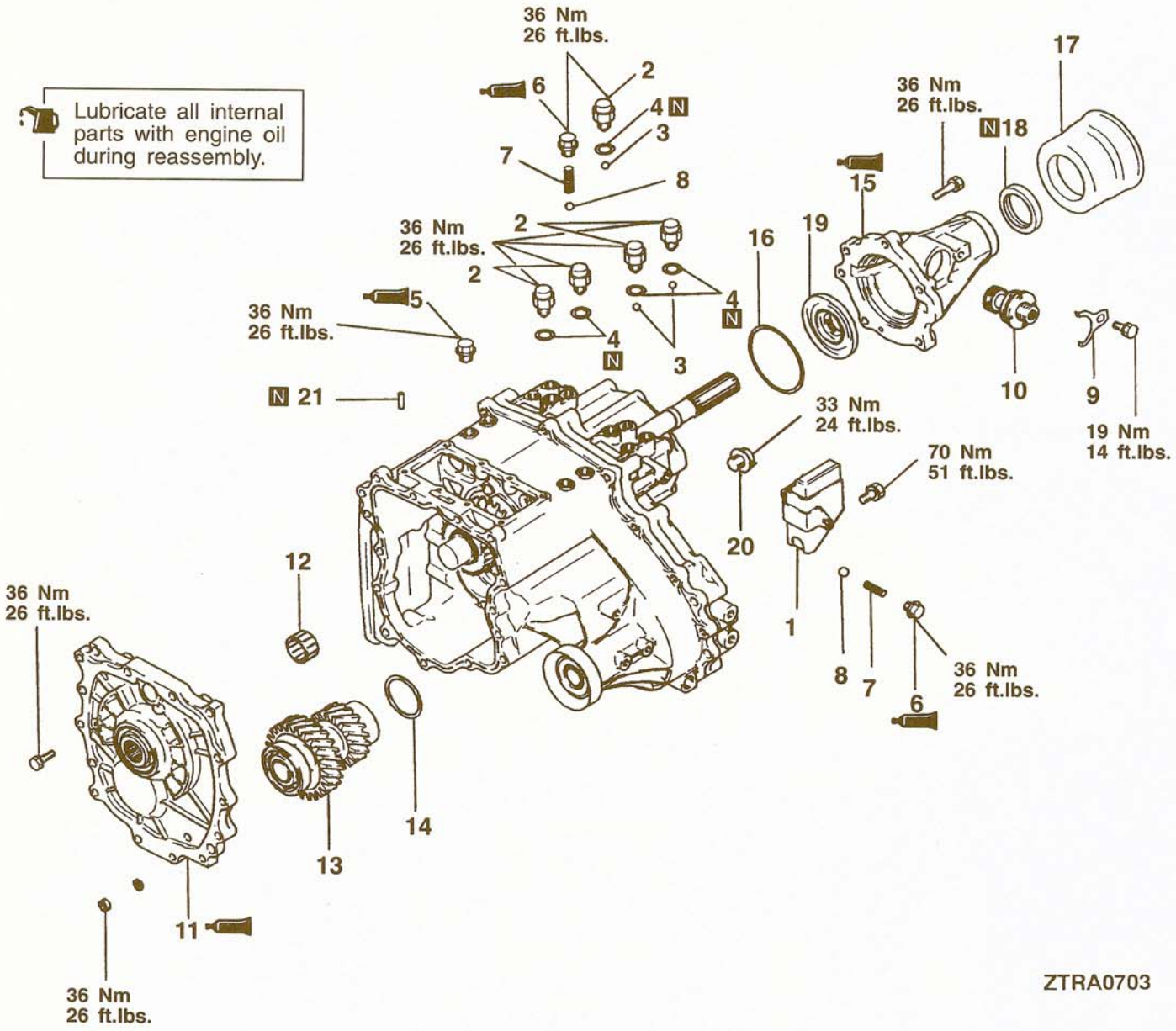


**Disassembly steps**

1. Dynamic damper
▶U◀ 2. Detection switch (5)
3. Steel ball
4. Gasket
▶T◀ 5. Plug (7)
▶S◀ 6. Poppet plug
▶R◀ 7. Poppet spring
8. Steel ball
9. Sleeve clamp
▶Q◀ 10. Speedometer gear assembly
▶P◀ 11. Transfer case plate
12. Needle bearing
13. Countershaft gear
▶O◀ 14. Spacer
▶N◀ 15. Rear cover
▶M◀ 16. Spacer
17. Dust seal guard
▶L◀ 18. Oil seal
▶K◀ 19. Oil seal
20. H-L shift rail plug
▶J◀ 21. Spring pin (H-L shift fork)

TSB Revision

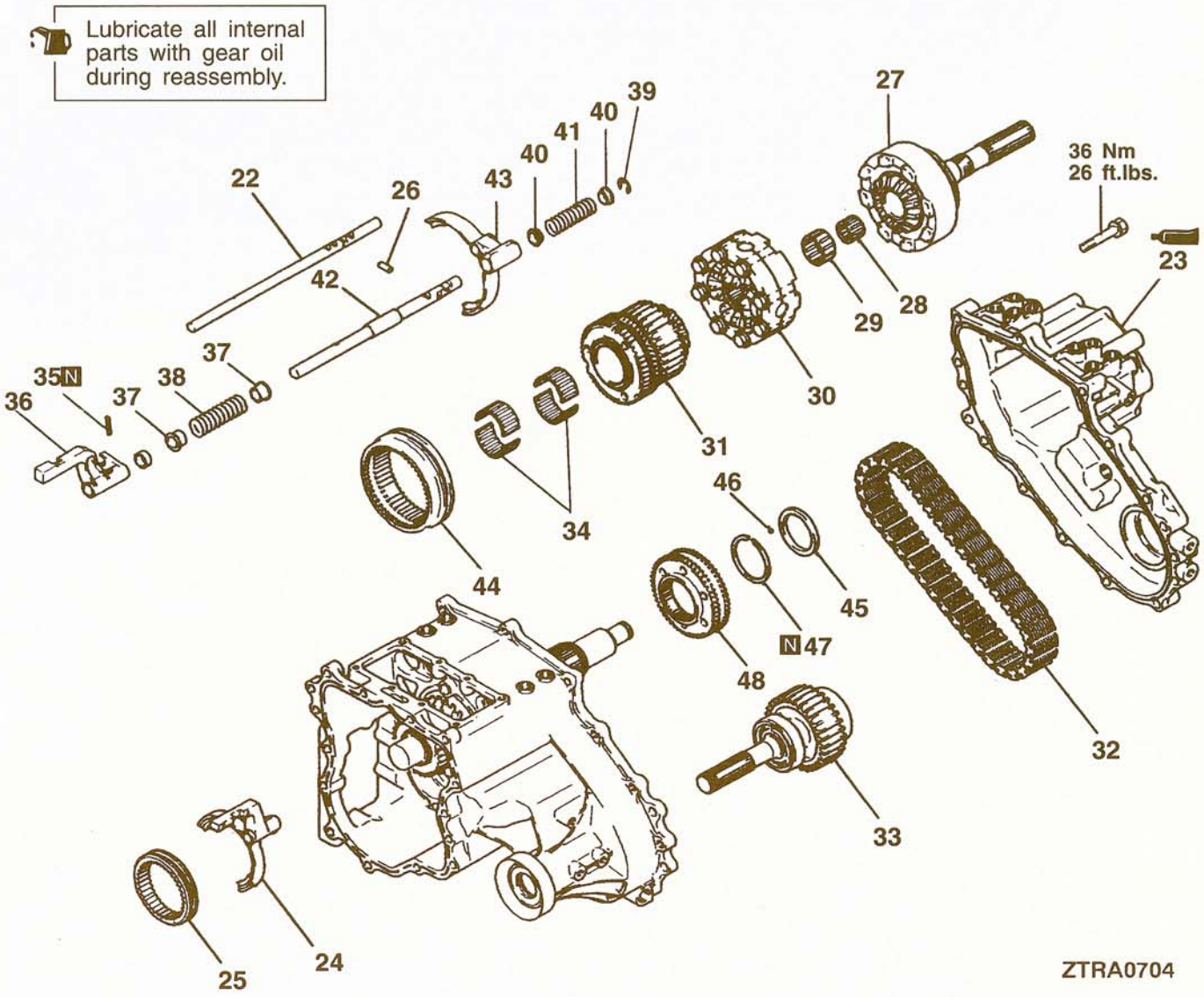


**Disassembly steps**

- ◀A▶ ▶J◀ 22. H-L shift rail
- ◀A▶ ▶I◀ 23. Chain cover
- 24. H-L shift fork
- 25. H-L clutch sleeve
- ▶I◀ 26. Interlock plunger
- 27. Rear output shaft
- 28. Needle bearing
- 29. Needle bearing
- 30. Center differential case
- ◀B▶ ▶H◀ 31. 2-4WD synchronizer
- ◀B▶ ▶H◀ 32. Chain
- ◀B▶ ▶H◀ 33. Front output shaft
- 34. Needle bearing
- ◀C▶ ▶G◀ 35. Spring pin (2-4WD shift lug)
- ▶G◀ 36. 2-4WD shift lug
- ▶G◀ 37. Spring seat
- ▶G◀ 38. Spring
- 39. E-ring
- 40. Spring seat
- 41. Spring
- ▶G◀ 42. 2-4WD shift rail
- 43. 2-4WD shift fork
- 44. 2-4WD synchronizer sleeve
- 45. Sleeve
- 46. Steel ball
- ▶F◀ 47. Snap ring
- 48. Differential lock hub

**TSB Revision**

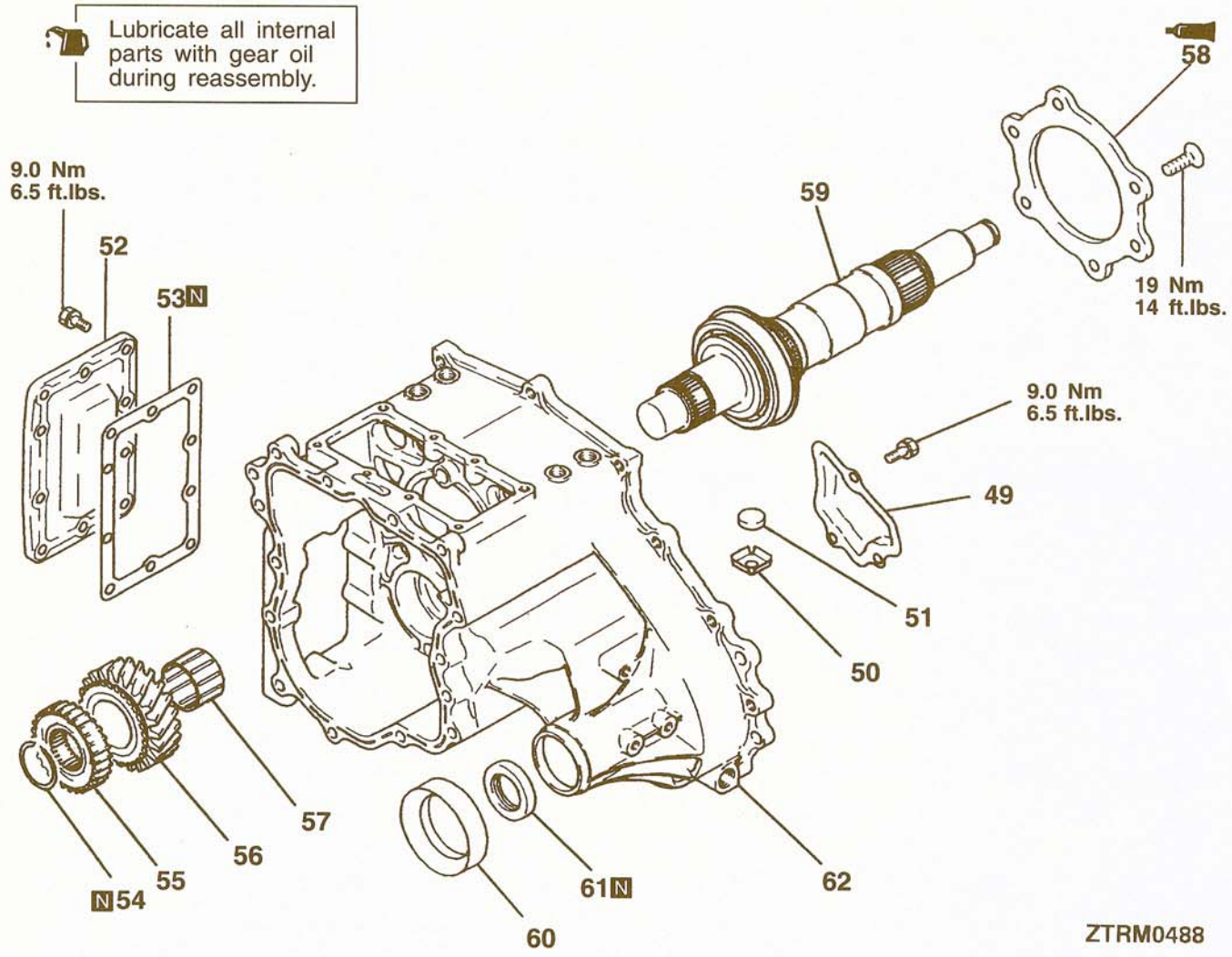


**Disassembly steps**

- 49. Oil pool cover
- ▶E◀ 50. Magnet holder
- ▶E◀ 51. Magnet
- 52. Side cover
- 53. Side cover gasket
- ▶D◀ 54. Snap ring
- ▶C◀ 55. H-L clutch hub
- 56. Low speed gear
- 57. Needle bearing
- ▶B◀ 58. Rear bearing retainer
- 59. Transfer drive shaft
- 60. Dust seal guard
- ▶A◀ 61. Oil seal
- 62. Transfer case

TSB Revision

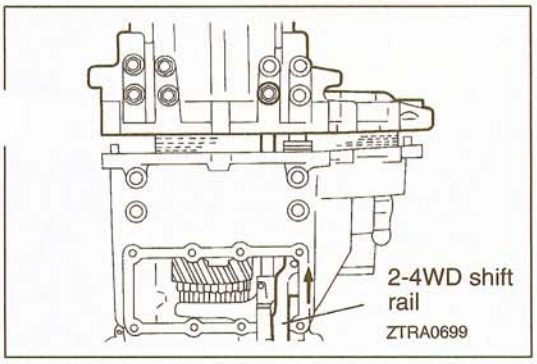


## DISASSEMBLY SERVICE POINTS

### ◀A▶ H-L SHIFT RAIL / CHAIN COVER REMOVAL

(1) Fix the H-L shift rail at the High side.
(2) Place the 2-4WD shift rail at the AWD position.

NOTE
If the 2-4WD shift rail is placed at the RWD position, the chain cover cannot be removed because of interlocking.

(3) Remove the chain cover and remove H-L shift rail.

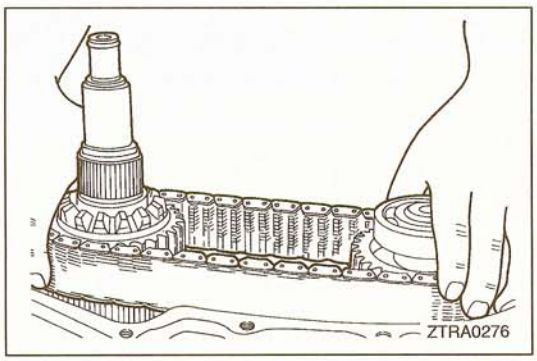


### ◀B▶ 2-4WD SYNCHRONIZER / CHAIN / FRONT OUTPUT SHAFT REMOVAL

(1) Remove the 2-4WD synchronizer, chain and front output shaft as a set.

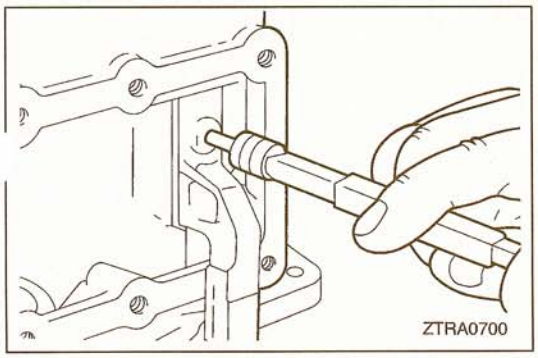


### ◀C▶ SPRING PIN REMOVAL

**Caution**
**The spring may fly out.**

## ADJUSTMENT BEFORE REASSEMBLY

### SPACER SELECTION FOR ADJUSTMENT OF COUNTERSHAFT GEAR END PLAY

(1) Place a solder bar [about 10 mm (.39 in.) in length and 1.6 mm (.063 in.) in diameter] on the transfer case as illustrated.
(2) Install the countershaft gear and transfer case plate and tighten the bolts to the specified torque.
(3) If the solder is not deformed, repeat the steps (1) and (2) using a thicker solder bar.

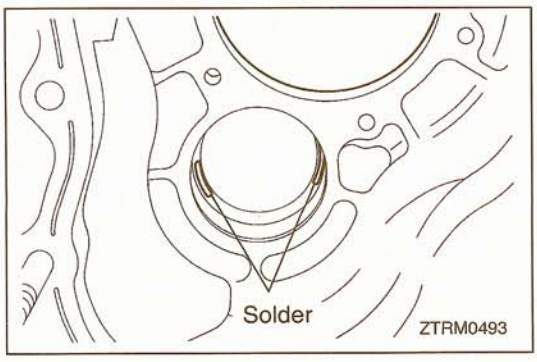


(4) Using a micrometer, measure the thickness of the crushed solder bar. Based on the result, select a spacer which adjust the end play to the standard value shown below:

**Standard value: 0–0.15 mm (0–.0006 in.)**

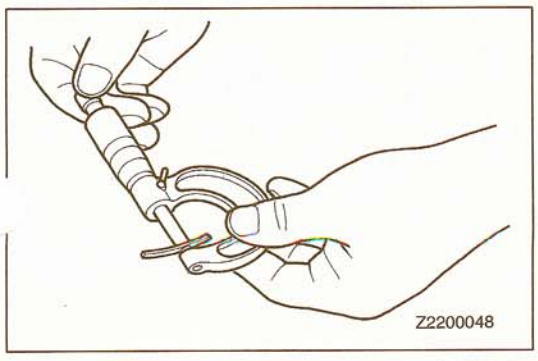

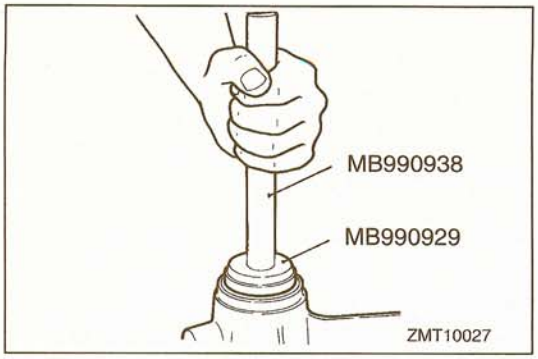


## REASSEMBLY SERVICE POINTS

### ▶A◀ OIL SEAL INSTALLATION

(1) Apply gear oil to the lip of the oil seal after press-fittin

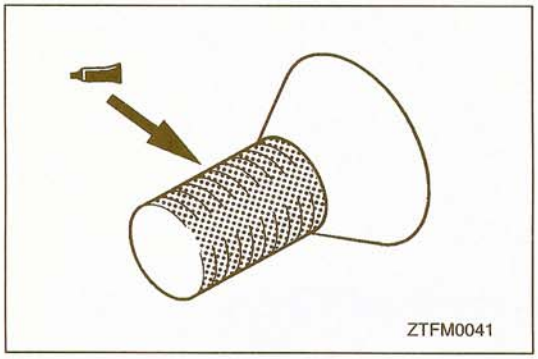


### ▶B◀ REAR BEARING RETAINER INSTALLATION

(1) The rear bearing retainer screw is a precoated screw. When it is to be reused, apply sealant beforehand.

**Specified sealant:**
**3M STUD Locking No. 4170 or equivalent**

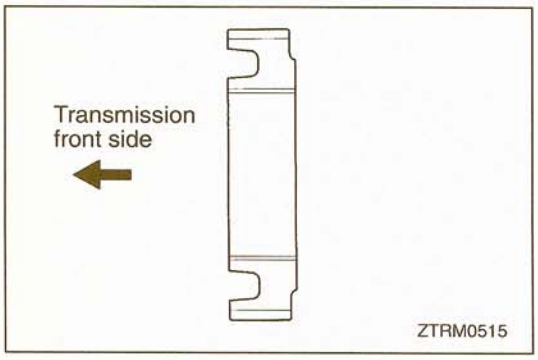


### ▶C◀ H-L CLUTCH HUB INSTALLATION

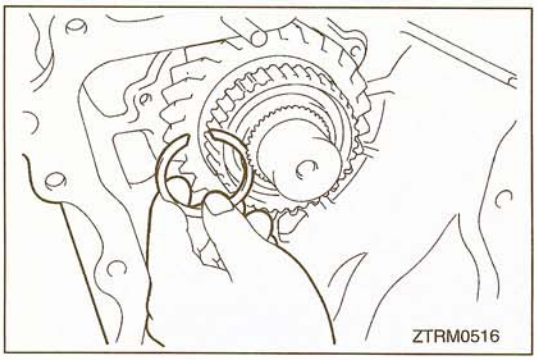


### ▶D◀ SNAP RING INSTALLATION

(1) Select and install the snap ring which adjusts the H-L clutch hub end play to the standard value.

**Standard value: 0–0.08 mm (0–.0031 in.)**

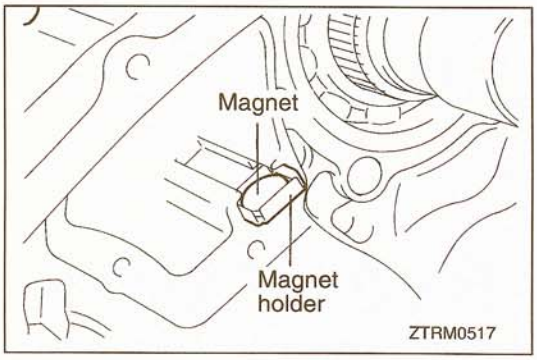


### ▶E◀ MAGNET / MAGNET HOLDER INSTALLATION

**TSB Revision**

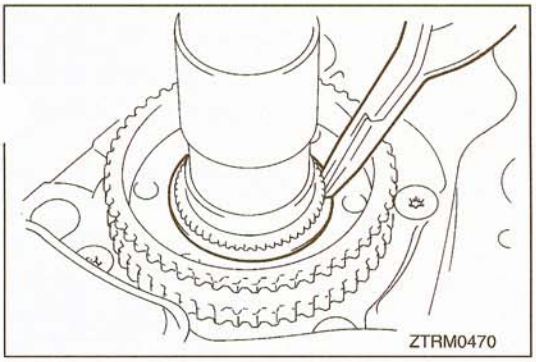


### ▶F◀ SNAP RING INSTALLATION

(1) Select a snap ring which adjusts the differential lock hub end play to the standard value shown below:

**Standard value: 0–0.08 mm (0–.0031 in.)**

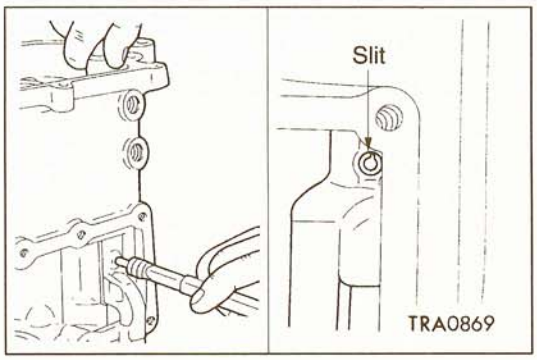


### ▶G◀ 2-4WD SHIFT RAIL / 2-4WD SHIFT LUG / SPRING SEAT / SPRING / SPRING PIN INSTALLATION

(1) Slide the spring seats and spring over the shift rail and set the shift lug in position in the transfer case.
(2) While paying attention to the direction of the shift rail, insert the shift rail in the shift lug and line up the shift lug and shift rail spring pin holes.
(3) While pressing the rail, install the spring pin in such a way that the slit of the spring pin will face the axial center of the shift rail.

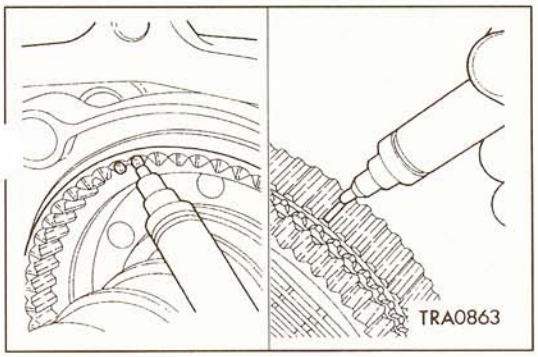


### ▶H◀ FRONT OUTPUT SHAFT / CHAIN / 2-4WD SYNCHRONIZER INSTALLATION

(1) Make a white paint mark on the deep groove portions (three places) of the 2-4WD synchronizer.
(2) Make a white paint mark on the projections (three places) of the 2-4WD synchronizer sleeve splines.

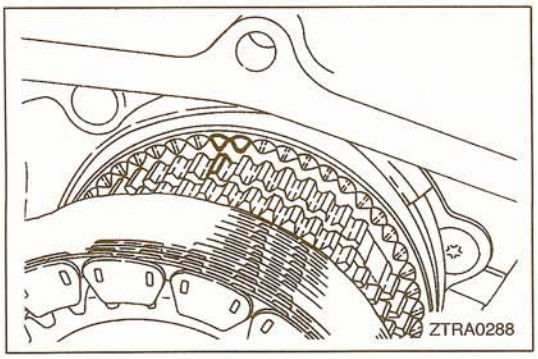


(3) Place the chain in tight mesh with the 2-4WD synchronizer and front output shaft sprockets.
(4) With both sprockets spaced the farthest apart, install them on the transfer case simultaneously.

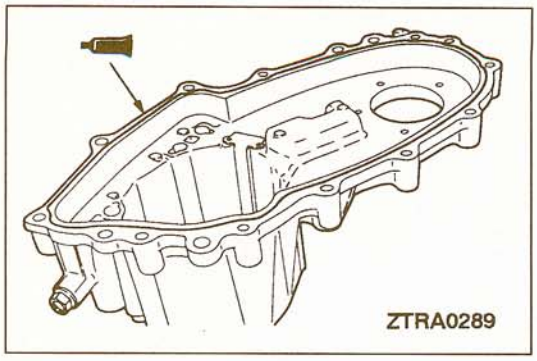


### ▶I◀ INTERLOCK PLUNGER / CHAIN COVER INSTALLATION

(1) Insert the interlock plunger into a position where it does not interfere with the 2-4WD shift rail.
(2) Apply a sealant to the illustrated position of the chain cover.

**Specified sealant:**
**Mitsubishi genuine sealant Part No. MD997740 or equivalent**

**Caution**
**Squeeze the sealant out evenly to make sure that it is not broken or excessively supplied.**

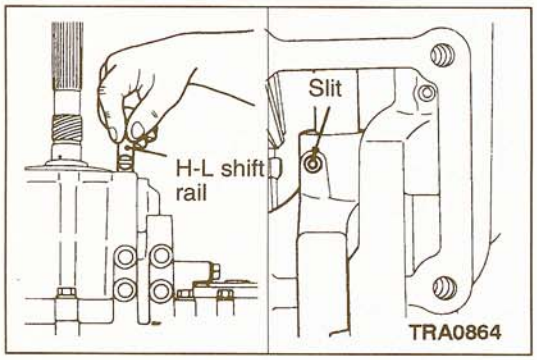


### ▶J◀ H-L SHIFT RAIL / SPRING PIN INSTALLATION

(1) Insert the H-L shift rail in the transfer case, while paying attention to its direction.
(2) Line up the shift rail and shift fork spring pin holes and install the spring pin so that the slit of the spring pin will face the axial center of the shift rail.

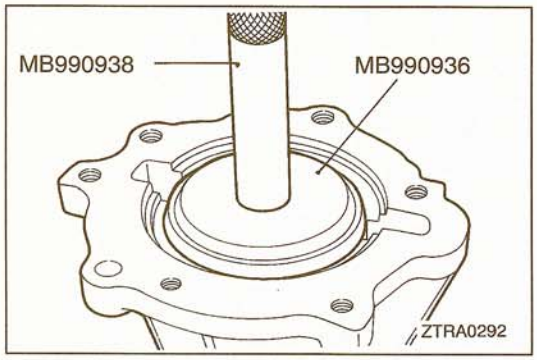


### ▶K◀ OIL SEAL INSTALLATION

(1) Apply gear oil to the lip of the oil seal after press-fitting.

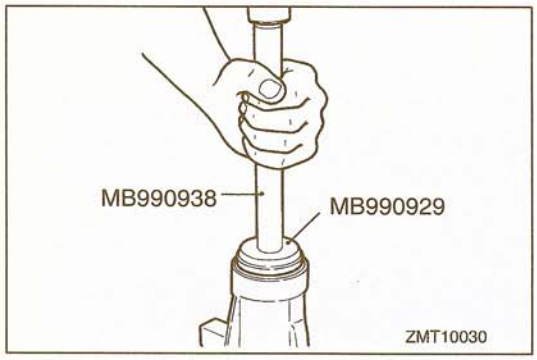


### ▶L◀ OIL SEAL INSTALLATION

(1) Apply gear oil to the lip of the oil seal after press-fitting.

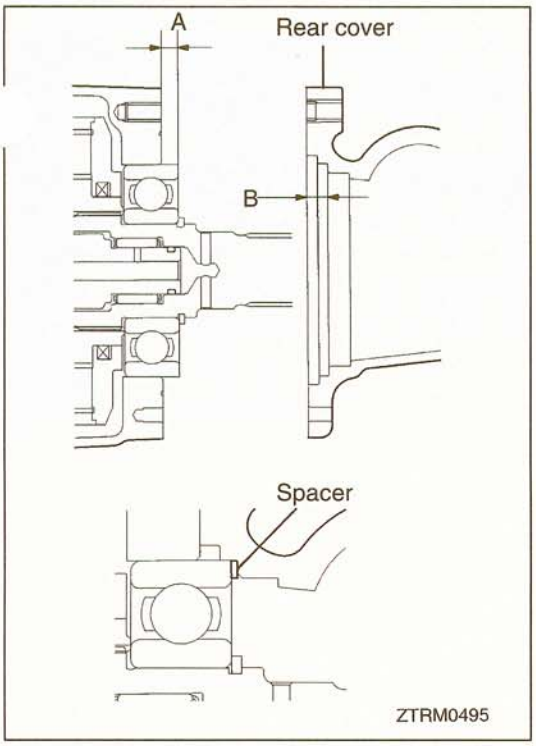


### ▶M◀SPACER INSTALLATION

(1) Measure projection "A" of the rear output shaft bearing and depth "B" to the second stage in the rear cover recess.
(2) Subtract A from B and let the answer be C. Subtract the thickness of the spacer from C, and select a spacer so that the subtracted value will be the standard value shown below.

**Standard value: 0.025–0.150 mm (.00098–.00591 in.)**

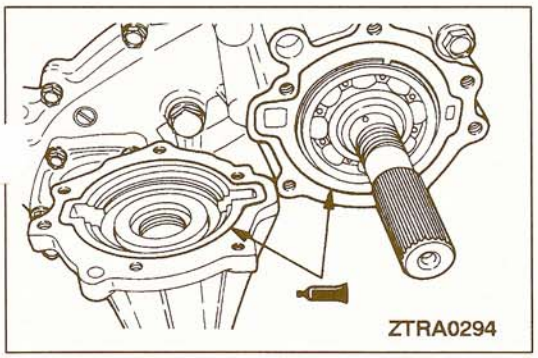


### ▶N◀REAR COVER INSTALLATION

(1) Apply sealant to the rear cover as illustrated.

**Specified sealant:**
**Mitsubishi genuine sealant Part No. MD997740 or equivalent**

**Caution**
**Squeeze the sealant out evenly to make sure that it is not broken or excessively supplied.**

### ▶O◀SPACER INSTALLATION

(1) Install the previously selected spacer (see "ADJUSTMENT BEFORE REASSEMBLY").

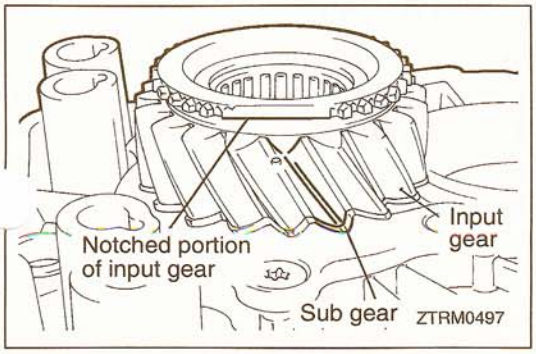


### ▶P◀TRANSFER CASE PLATE INSTALLATION

(1) Align one of the sub gear teeth with the notched tooth of the input gear.

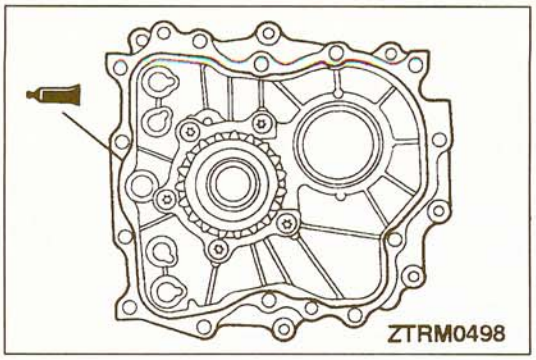


(2) Apply a bead of sealant to the transfer case plate as illustrated.

**Specified sealant:**
**Mitsubishi genuine sealant Part No. MD99774 or equivalent**

**Caution**
**Squeeze the sealant out evenly to make sure that it is not broken or excessively supplied.**

(3) Install the transfer case plate together with the input gear, while sliding the input gear tooth aligned in Step (1) along the tooth space of the countershaft cluster gear.

NOTE
The transfer case plate must be installed smoothly without hitch.

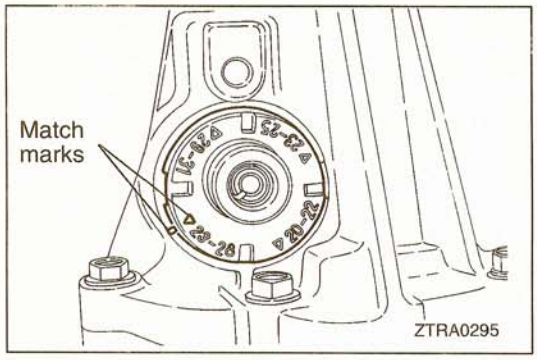


### ▶Q◀ SPEEDOMETER GEAR INSTALLATION

(1) Align the match marks according to the number of teeth.

**Caution**
**The number marked on the sleeve is the number of teeth of the driven gear.**

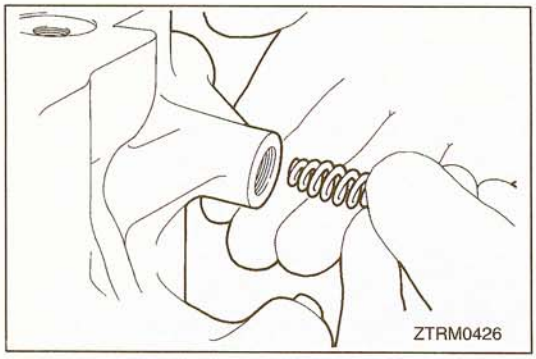


### ▶R◀ POPPET SPRING INSTALLATION

(1) Install the spring with its tapered end oriented to the ball side.

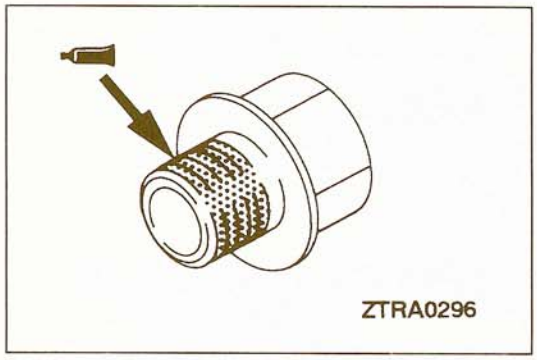


### ▶S◀ POPPET PLUG INSTALLATION

(1) The poppet plug is a precoated plug. When it is to be reused, apply sealant beforehand.

**Specified sealant: 3M ATD Part No. 8660 or equivalent**

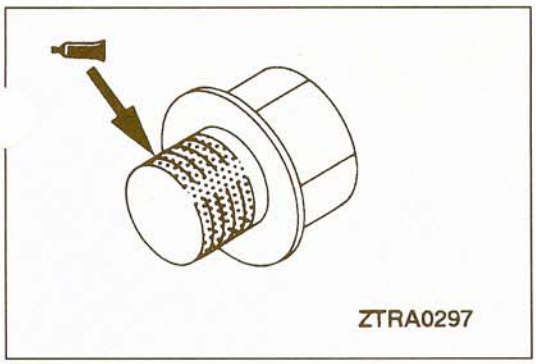


### ▶T◀ PLUG INSTALLATION

(1) The plug is precoated. When it is to be reused, apply sealant beforehand.

**Specified sealant: 3M ATD Part No. 8660 or equivalent**

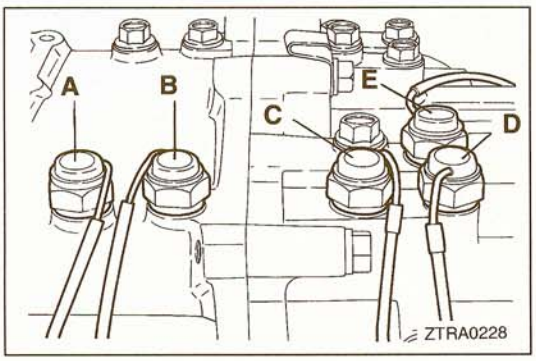


### ▶U◀ DETECTION SWITCH INSTALLATION

(1) Mount detection switches in the right positions, while using care to prevent confusion.

A: Ball built in, connector brown
B: Ball built in, connector black
C: Ball separate, connector brown
D: Ball separate, connector black
E: Ball separate, connector white

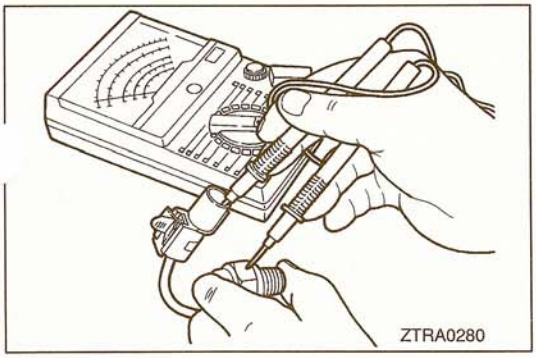


## INSPECTION

23301340023

### DETECTION SWITCH

(1) Check for continuity between the connector terminal and switch body.

| Switch state | Continuity |
|---|---|
| Switch end pressed | No |
| Switch end released | Yes |

# TRANSFER CASE PLATE

23302420016

## DISASSEMBLY AND REASSEMBLY

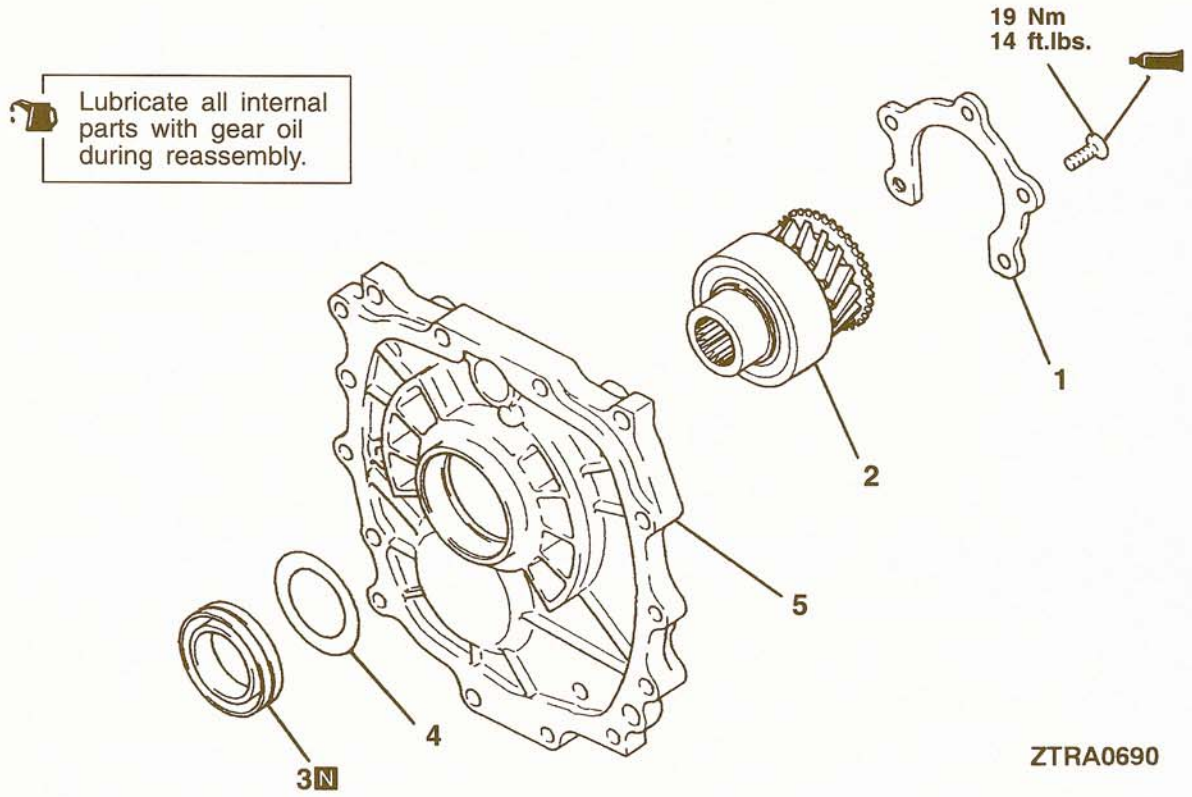


**Disassembly steps**

▶B◀ 1. Bearing retainer
2. Transfer input gear
▶A◀ 3. Oil seal
4. Baffle plate
5. Transfer case plate

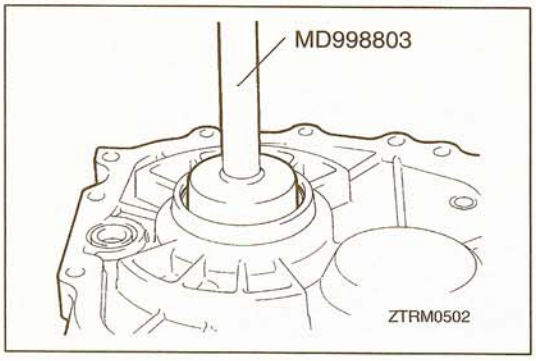


## REASSEMBLY SERVICE POINTS

### ▶A◀ OIL SEAL INSTALLATION

(1) After installing, apply gear oil to the lip of the oil seal.

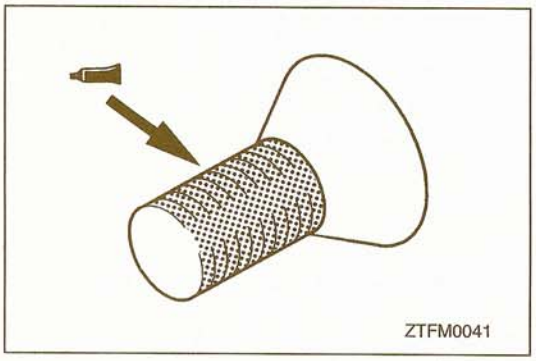


### ▶B◀ BEARING RETAINER INSTALLATION

(1) The rear bearing retainer bolt is a precoated bolt. When it is to be reused, apply sealant beforehand.

**Specified sealant:**
**Mitsubishi genuine sealant Part No. MD997740 or equivalent**

TSB Revision

# TRANSFER INPUT GEAR

23301510028

## DISASSEMBLY AND REASSEMBLY

Lubricate all internal parts with gear oil during reassembly.

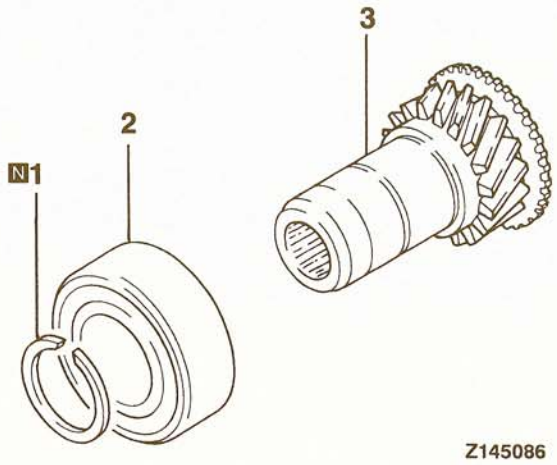


**Disassembly steps**

◀A▶ ▶B◀ 1. Snap ring
◀A▶ ▶A◀ 2. Ball bearing
3. Transfer input gear

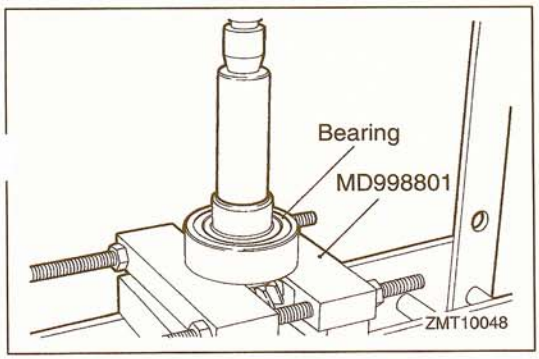


### DISASSEMBLY SERVICE POINT

**◀A▶ BALL BEARING REMOVAL**

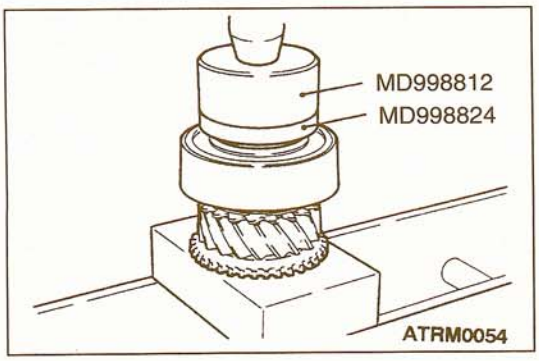


### REASSEMBLY SERVICE POINTS

**▶A◀ BALL BEARING INSTALLATION**

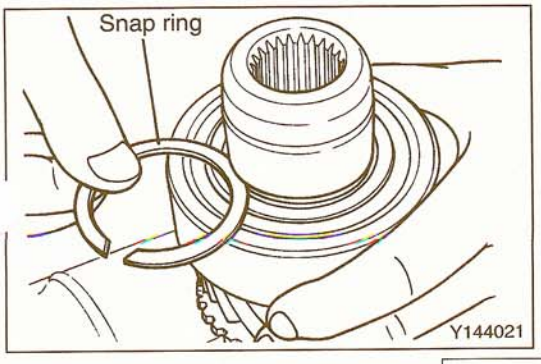


**▶B◀ SNAP RING INSTALLATION**

(1) Select and install the snap ring which adjust the transfer input gear bearing end play to the standard value.

**Standard value: 0–0.06 mm (0–.0024 in.)**

**TSB Revision**

# COUNTERSHAFT GEAR

23302400010

## DISASSEMBLY AND REASSEMBLY

Lubricate all internal parts with gear oil during reassembly.

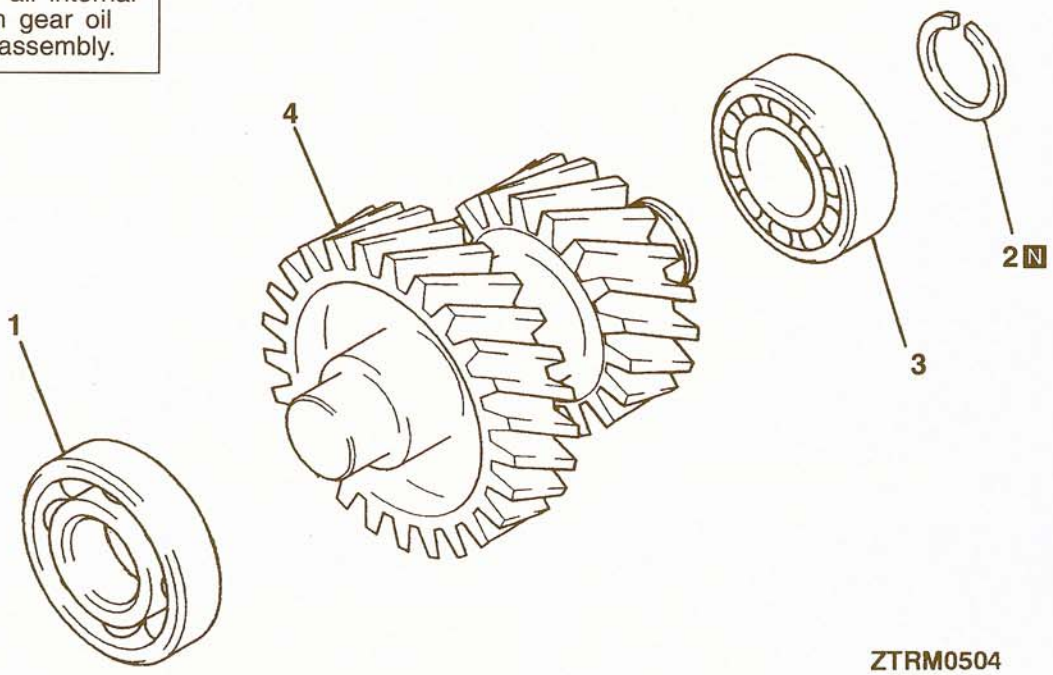


ZTRM0504

**Disassembly steps**

◀A▶ ▶C◀ 1. Ball bearing
▶B◀ 2. Snap ring
◀B▶ ▶A◀ 3. Roller bearing
4. Countershaft gear

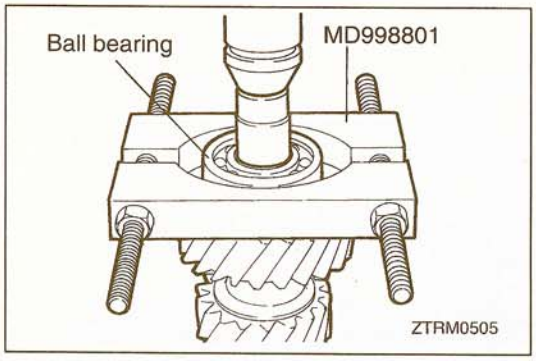


## DISASSEMBLY SERVICE POINTS

### ◀A▶ BALL BEARING REMOVAL

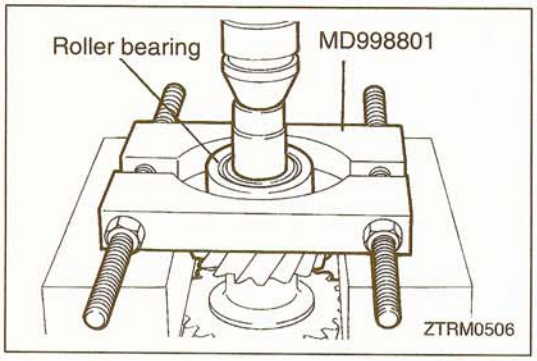


### ◀B▶ ROLLER BEARING REMOVAL

TSB Revision

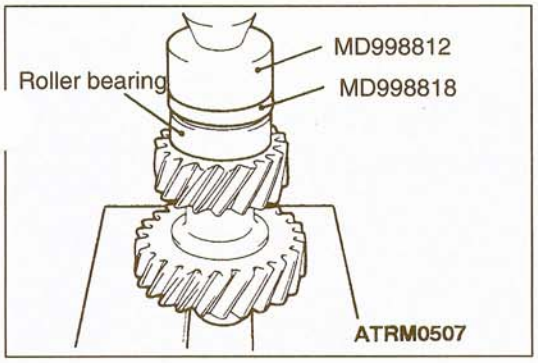


## REASSEMBLY SERVICE POINTS

### ▶A◀ ROLLER BEARING INSTALLATION

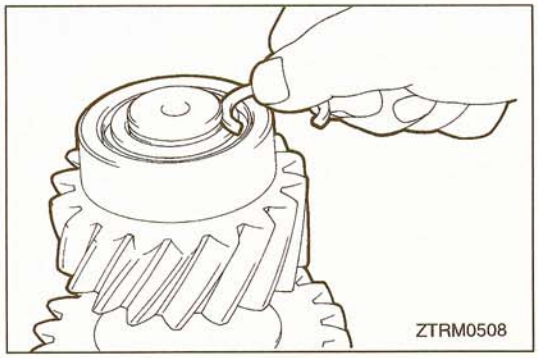


### ▶B◀ SNAP RING INSTALLATION

(1) Select a snap ring that adjusts the end play of the countershaft gear roller bearing to the standard value shown below:

**Standard value: 0–0.08 mm (0–.0031 in.)**

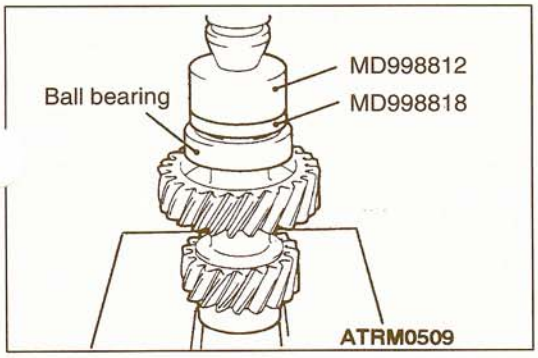


### ▶C◀ BALL BEARING INSTALLATION

# 2-4WD SYNCHRONIZER

23301420024

## DISASSEMBLY AND REASSEMBLY

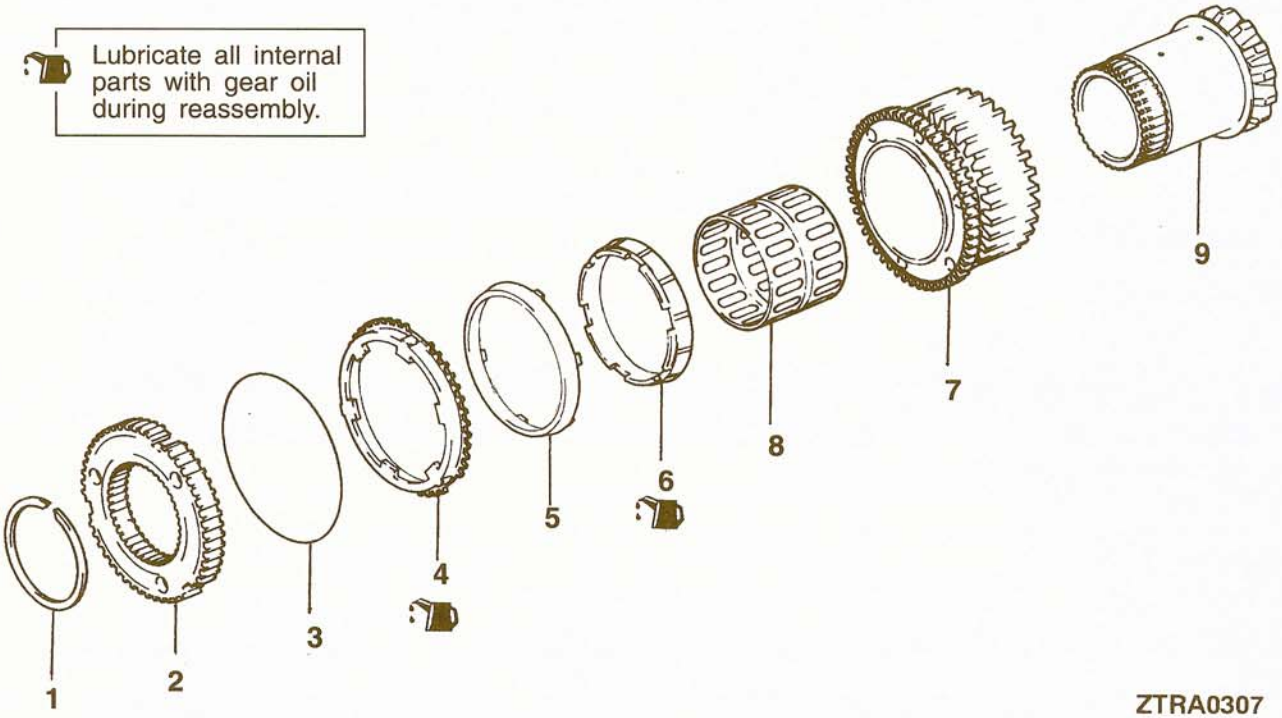


**Disassembly steps**

- ▶C◀ 1. Snap ring
- 2. 2-4WD synchronizer hub
- 3. Synchronizer spring
- ▶B◀ 4. Outer synchronizer ring
- 5. Synchronizer cone
- ▶A◀ 6. Inner synchronizer ring
- 7. Drive sprocket
- 8. Needle bearing
- 9. Front side gear

TSB Revision

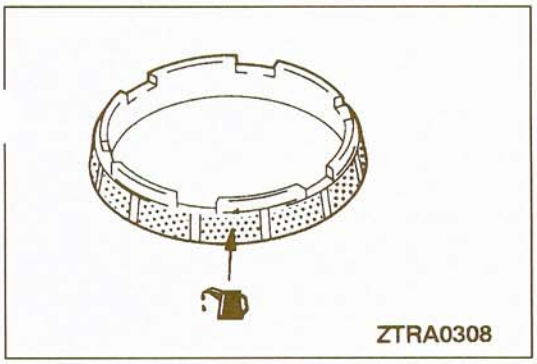


## REASSEMBLY SERVICE POINTS

### ▶A◀ INNER SYNCHRONIZER RING INSTALLATION

(1) Apply gear oil to the synchronizer ring cone surface before installation.

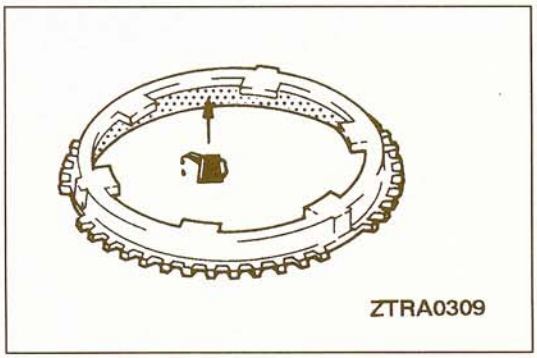


### ▶B◀ OUTER SYNCHRONIZER RING INSTALLATION

(1) Apply gear oil to the synchronizer ring cone surface before installation.

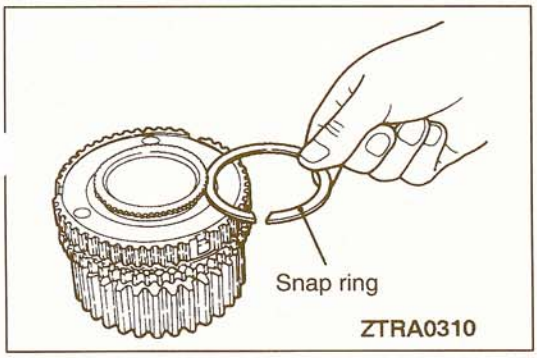


### ▶C◀ SNAP RING INSTALLATION

(1) Select and install the snap ring which adjusts the 2-4WD synchronizer hub end play to the standard value.

**Standard value: 0–0.08 mm (0–.0031 in.)**

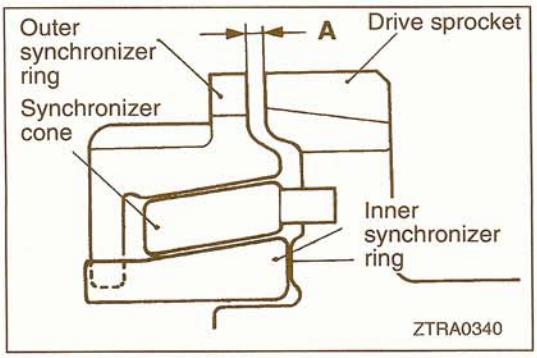


## INSPECTION

23301430027

### SYNCHRONIZER RING AND SYNCHRONIZER CONE

(1) Combine the inner and outer synchronizer rings and cone with the drive sprocket and measure the dimension A in the illustration. If the dimension A is less than the limit, replace them as a set.

**Limit: 0.3 mm (.012 in.)**

NOTE
Scratches may be found on the cone surface in the rotating direction these are produced by the liners of the synchronizer rings and do not mean the malfunction. Therefore, the parts need not be replaced if the above-mentioned clearance is satisfied.

# CENTER DIFFERENTIAL CASE

23301390028

## REASSEMBLY AND DISASSEMBLY

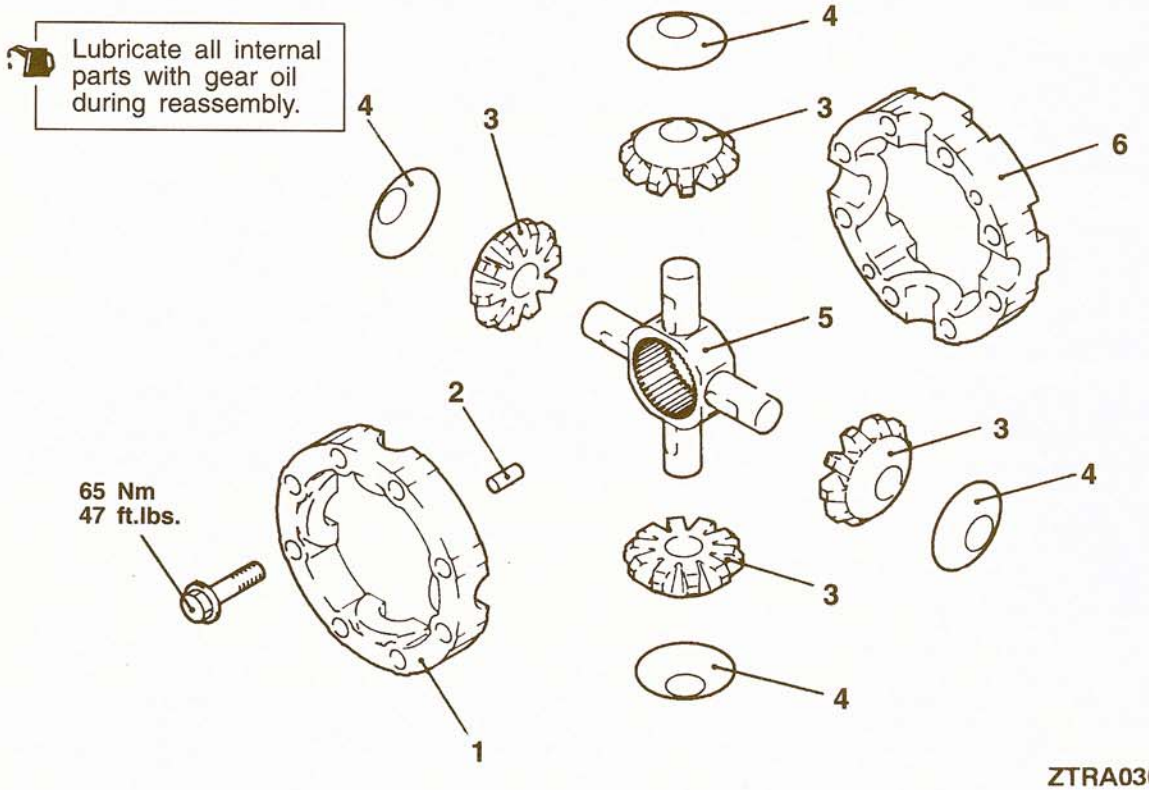


**Disassembly steps**

▶A◀ 1. Center differential case front
2. Dowel pin
3. Pinion
4. Thrust washer
5. Pinion shaft
6. Center differential case rear

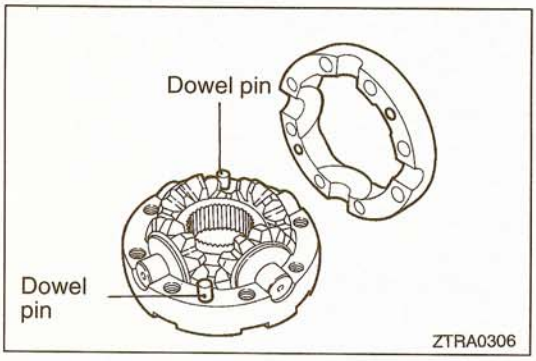


## REASSEMBLY SERVICE POINT

### ▶A◀ CENTER DIFFERENTIAL CASE INSTALLATION

(1) Pay attention to the positions of the dowel pins when reassembling, and make sure that the match marks on the outside circumference are in alignment.

TSB Revision

# REAR OUTPUT SHAFT

23301360029

## DISASSEMBLY AND REASSEMBLY

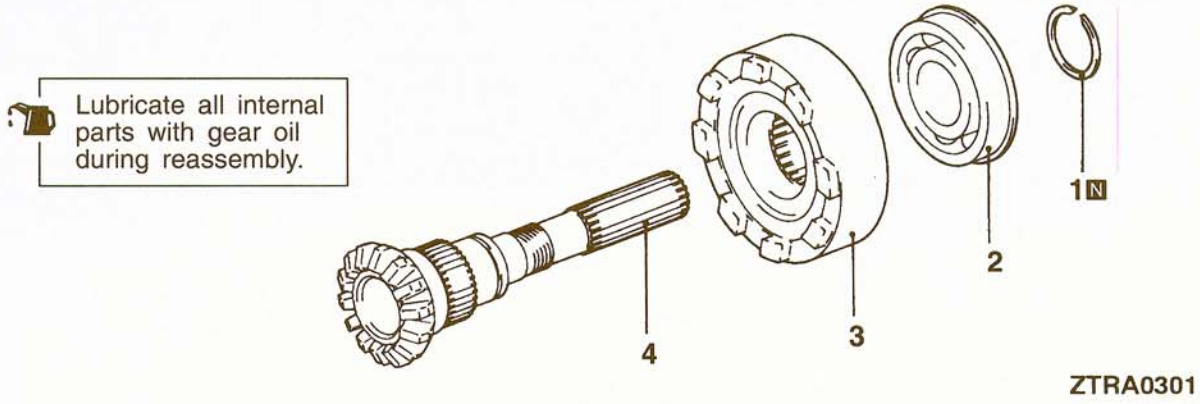


**Disassembly steps**

◀A▶ ▶B◀ 1. Snap ring
◀A▶ ▶A◀ 2. Ball bearing
3. Viscous coupling
4. Rear output shaft

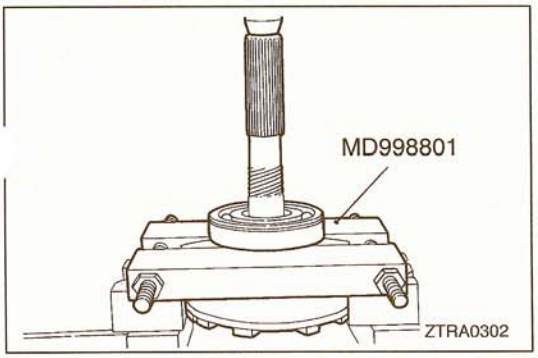


### DISASSEMBLY SERVICE POINT

**◀A▶ BALL BEARING REMOVAL**

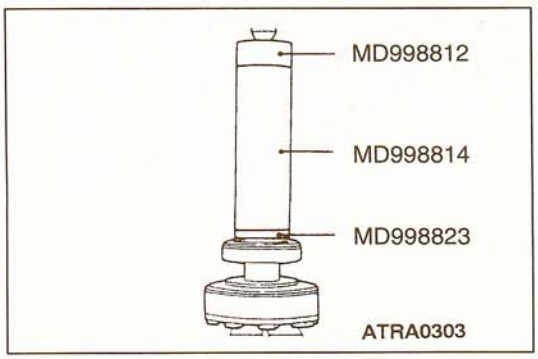


### REASSEMBLY SERVICE POINTS

**▶A◀ BALL BEARING INSTALLATION**

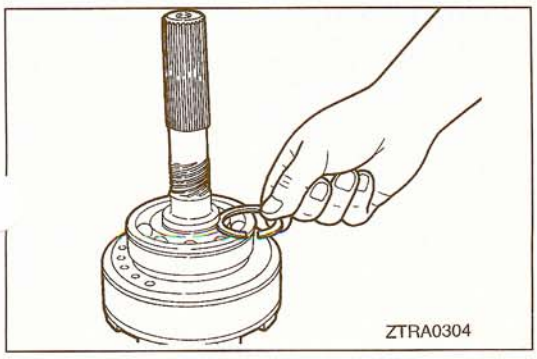


**▶B◀ SNAP RING INSTALLATION**

(1) Select and install the snap ring which adjusts the rear output shaft bearing end play to the standard value.

**Standard value: 0–0.08 mm (0–.0031 in.)**

**TSB Revision**

# TRANSFER DRIVE SHAFT

23301450023

## DISASSEMBLY AND REASSEMBLY

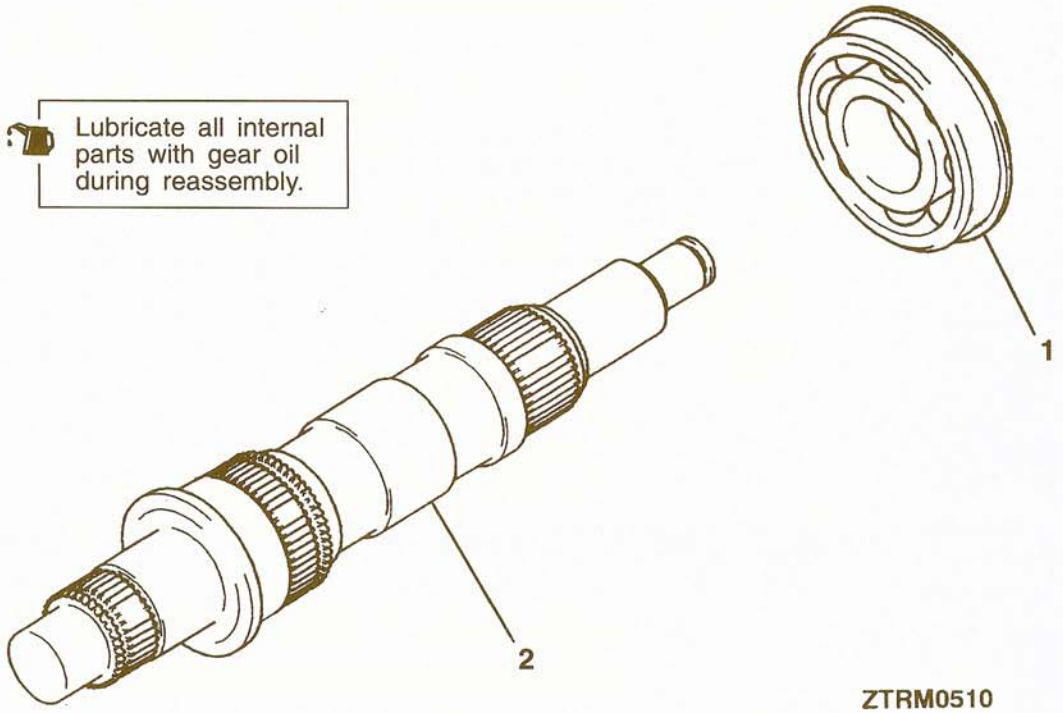


**Disassembly steps**

◀A▶ ▶A◀ 1. Ball bearing
2. Transfer drive shaft

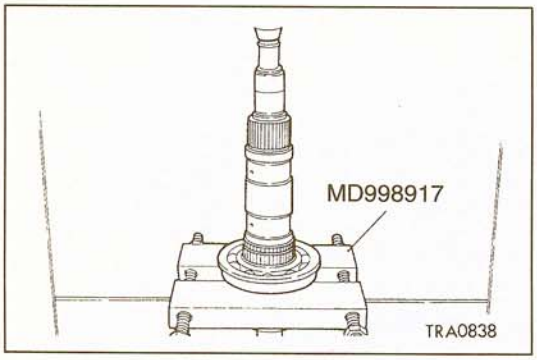


### DISASSEMBLY SERVICE POINT

◀A▶ BALL BEARING REMOVAL

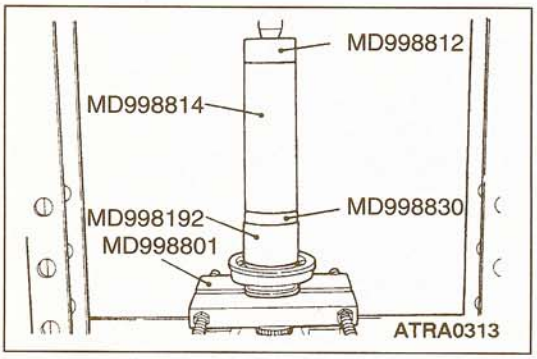


### REASSEMBLY SERVICE POINT

▶A◀ BALL BEARING INSTALLATION

TSB Revision

# FRONT OUTPUT SHAFT

23301480022

## DISASSEMBLY AND REASSEMBLY

Lubricate all internal parts with gear oil during reassembly.

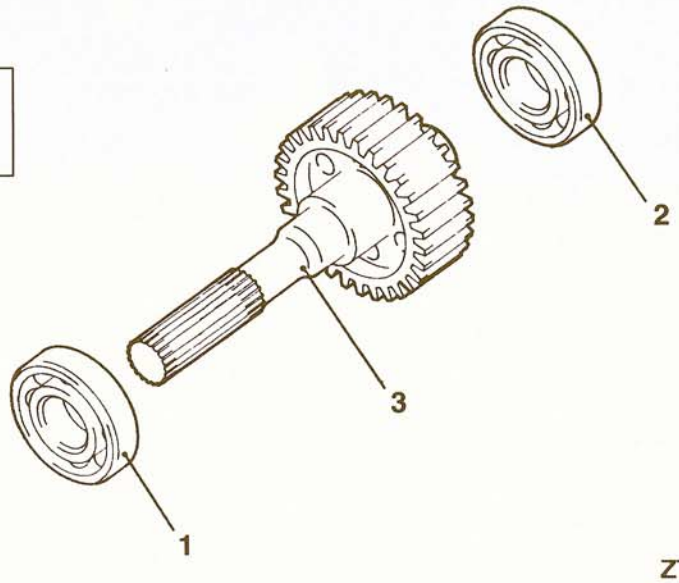


ZTRA0319

**Disassembly steps**

◀A▶ ▶A◀ 1. Ball bearing
◀A▶ ▶A◀ 2. Ball bearing
3. Front output shaft

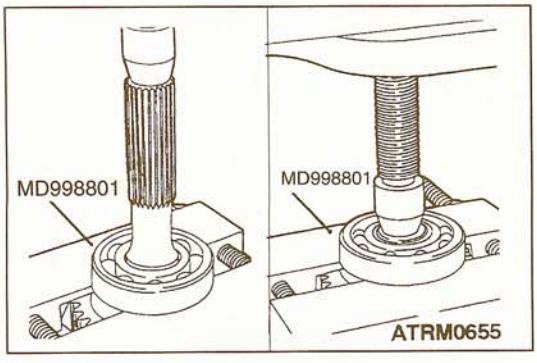


### DISASSEMBLY SERVICE POINT

◀A▶ BALL BEARING REMOVAL

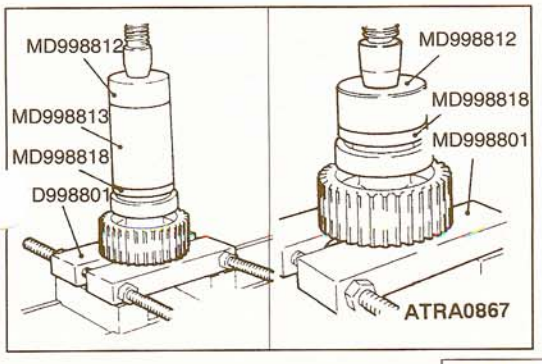


### REASSEMBLY SERVICE POINT

▶A◀ BALL BEARING INSTALLATION

TSB Revision

# SPEEDOMETER GEAR

23301570026

## DISASSEMBLY AND REASSEMBLY

Lubricate all internal parts with gear oil during reassembly.

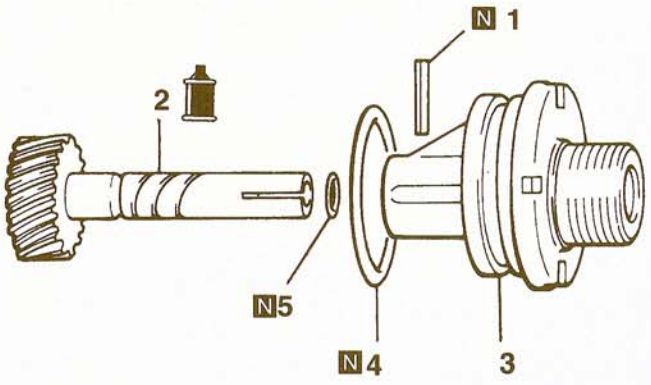


Z110008

**Disassembly steps**

▶A◀ 1. Spring pin
2. Speedometer driven gear
3. Speedometer sleeve
4. O-ring
5. O-ring

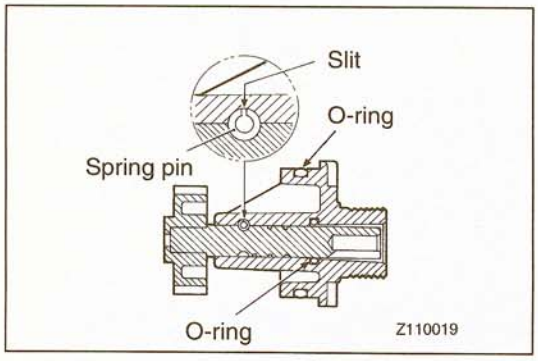


## REASSEMBLY SERVICE POINT

### ▶A◀ SPRING PIN INSTALLATION

(1) Drive the spring pin into position so that its slit faces the direction shown in the illustration.

TSB Revision

# PROPELLER SHAFT

## CONTENTS

25109000020

GENERAL SPECIFICATIONS ..... 2
LUBRICANTS ..... 2
PROPELLER SHAFT ..... 3
SERVICE SPECIFICATIONS ..... 2
SPECIAL TOOLS ..... 2
TROUBLESHOOTING ..... 3

# GENERAL SPECIFICATIONS

25100020018

## PROPELLER SHAFT

| Items | | 3.0L-12VALVE engine M/T | 3.0L-12VALVE engine A/T | 3.0L-24VALVE engine M/T | 3.0L-24VALVE engine A/T | 3.5L engine |
|---|---|---|---|---|---|---|
| Type | | 2-joint type | 2-joint type | 2-joint type | 2-joint type | 2-joint type |
| Length (joint to joint)×O.D. mm (in.) | Front propeller shaft | 665×50.8 (26.2×2.00) | 752×50.8 (29.6×2.00) | 665×50.8 (26.2×2.00) | 729×50.8 (28.7×2.00) | 713×50.8 (28.1×2.00) |
| | Rear propeller shaft | 793×75 (31.2×2.95) | 740×75 (29.1×2.95) | 793×75 (31.2×2.95) | 764×75 (30.0×2.95) | 750×75 (29.5×2.95) |

## UNIVERSAL JOINT

| Items | | Specifications |
|---|---|---|
| Type | | Cross type |
| Lubrication Method | | Nipple type |
| Journal O.D. mm (in.) | Front propeller shaft | 14.689 (.5783) |
| | Rear propeller shaft | 18.300 (.7205) |

# SERVICE SPECIFICATIONS

25100030028

| Items | Standard value | Limit |
|---|---|---|
| Clearance between snap ring and groove wall of yoke mm (in.) | 0.06 (.0024) or less | – |
| Propeller shaft runout mm (in.) | – | 0.6 (.024) |

# LUBRICANTS

25100040021

| Item | Specified lubricants |
|---|---|
| Sleeve yoke | Hypoid Gear Oil API classification GL-4 or higher SAE viscosity 80W, 75W–85W |

# SPECIAL TOOLS

25100060027

| Tool | Tool number and name | Supersession | Application |
|---|---|---|---|
|  | MB990840<br>Universal joint remover/ installer | MB990840-01 | Disassembly and reassembly of universal joint |
|  | MB991410<br>Collar | – | |

**TSB Revision**

# TROUBLESHOOTING

25100070013

| Trouble Symptom | Probable Cause | Remedy |
|---|---|---|
| Noise at start | Worn journal bearing | Replace |
| | Worn sleeve yoke spline | |
| | Loose propeller shaft installation | Retighten |
| Noise and vibration at high speed | Unbalanced propeller shaft | Replace |
| | Incorrect snap ring selection | Adjust the clearance. |
| | Worn journal bearing | Replace |

# PROPELLER SHAFT

25100100026

## REMOVAL AND INSTALLATION

**Pre-removal Operation**
- Set the Transfer Shift Lever to "2H".
- Transfer Gear Oil Draining
  (Refer to GROUP 00 – Maintenance Service.)

**Post-installation Operation**
- Transfer Gear Oil Supplying
  (Refer to GROUP 00 – Maintenance Service.)

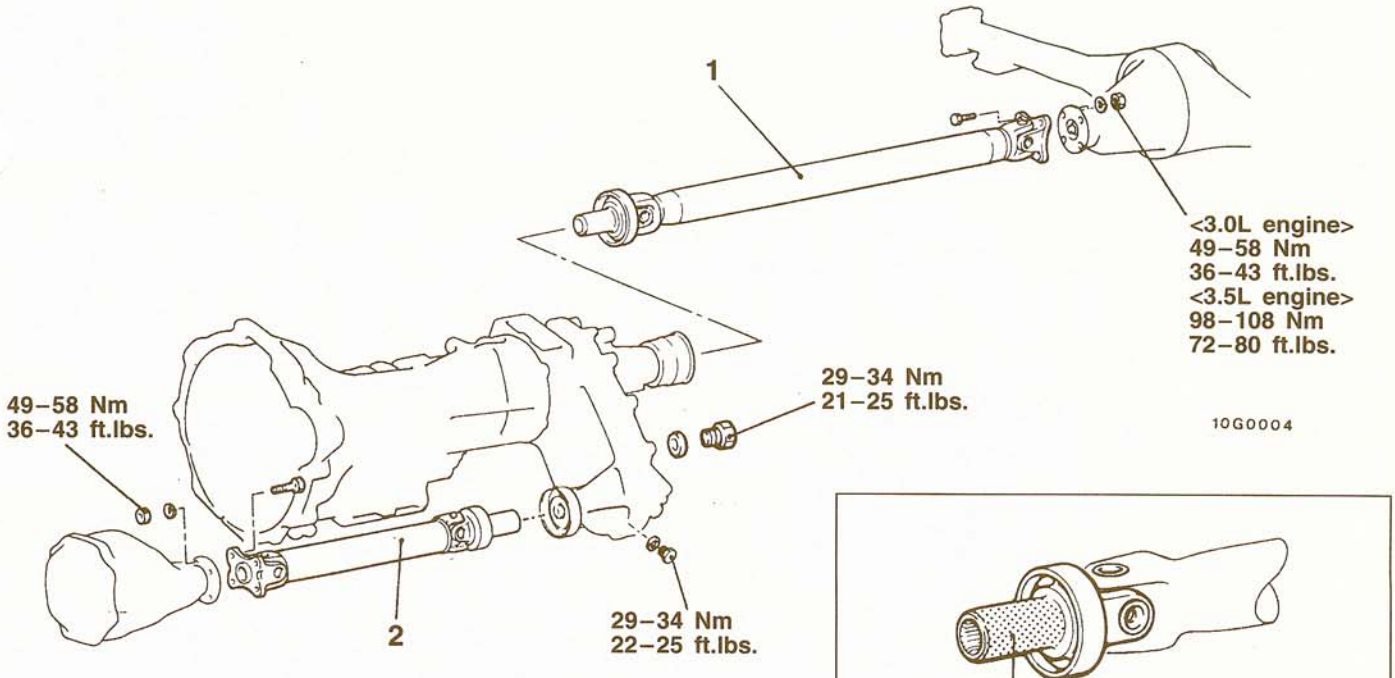


10G0004



10G0001

**Gear oil:**
**Hypoid gear oil API classification GL-4 or higher/SAE viscosity 80W, 75-85W**

00001656

**Removal steps**

◀A▶ ▶A◀ 1. Rear propeller shaft
◀A▶ ▶A◀ 2. Front propeller shaft

**TSB Revision**

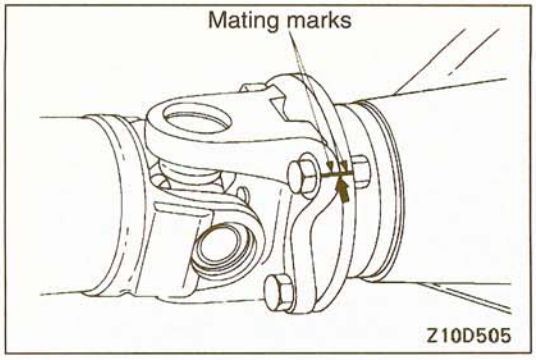


## REMOVAL SERVICE POINT

**◀A▶ REAR PROPELLER SHAFT/FRONT PROPELLER SHAFT REMOVAL**

(1) Make mating marks on the flange yoke and the differential companion flange.

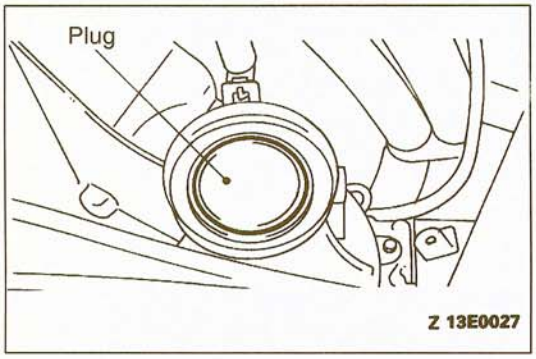


(2) Use the plug as a cover so that no foreign material gets into the transmission or transfer.

## INSTALLATION SERVICE POINT

**▶A◀ FRONT PROPELLER SHAFT/REAR PROPELLER SHAFT INSTALLATION**

**Caution**
**Be careful not to damage the oil seal lip of the transmission and transfer.**

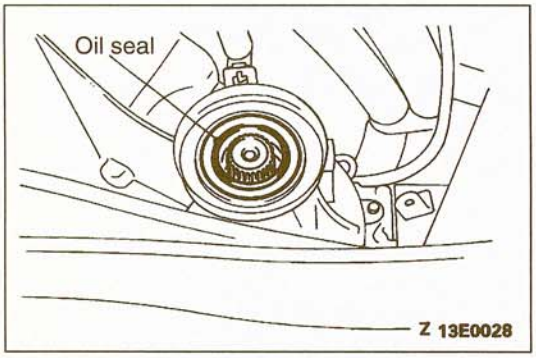


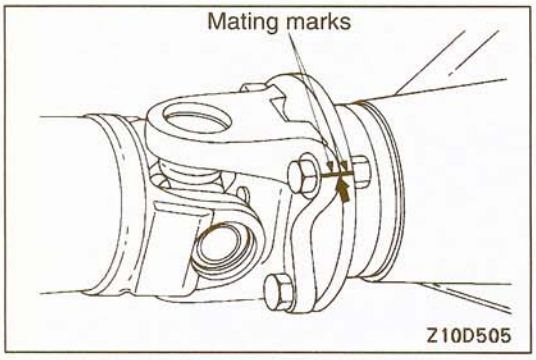


Install the propeller shaft to the companion flange so that the mating marks are aligned.

**Caution**
**If the threads of the bolts and nuts are stained with oil or grease, they can become loose. Completely remove oil or grease from the threads before tightening the bolts and nuts.**

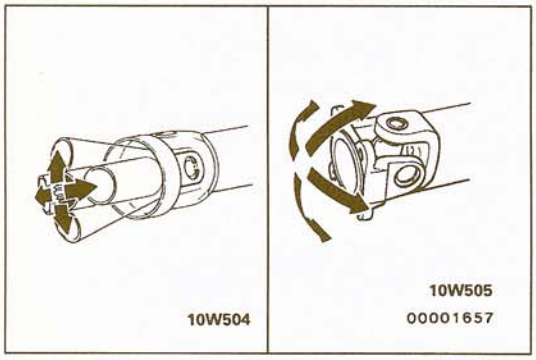


## INSPECTION

25100110029

- Check the universal joints for smooth operation in all directions.
- Check the sleeve yoke and flange yoke for wear, damage or cracks.
- Check the propeller shaft yokes for wear, damage cracks.
- Check the propeller shaft for bends, twisting or damage.

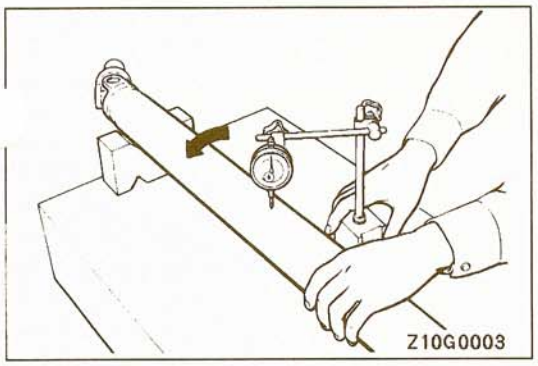


### PROPELLER SHAFT RUNOUT

Measure the propeller shaft runout with a dial indicator.

**Limit: 0.6 mm (.024 in.)**

## DISASSEMBLY AND REASSEMBLY

25100120022

**Front propeller shaft**

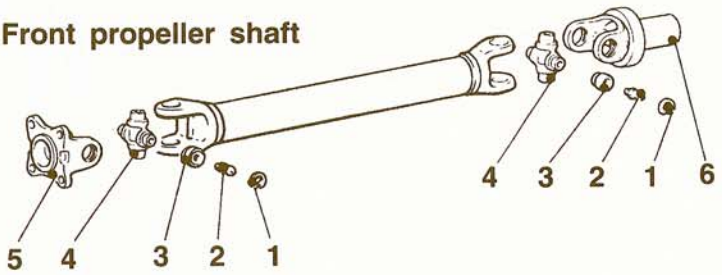


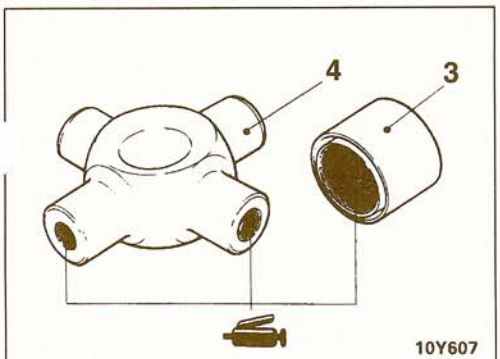


**Caution**
**Do not apply grease excessively. Otherwise, faulty fitting of bearing caps and errors in the selection of snap rings may result.**

**Rear propeller shaft**

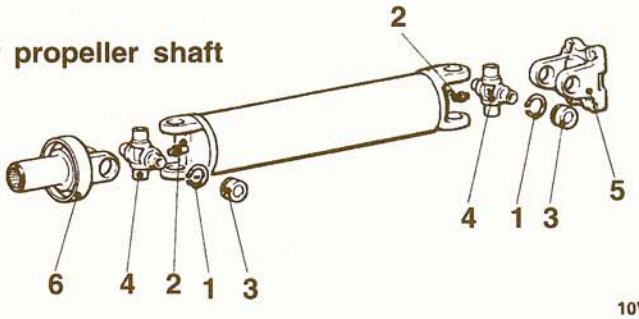


**Disassembly steps**

◀A▶ ▶B◀ 1. Snap ring
2. Grease fitting
◀B▶ ▶A◀ 3. Journal bearing
▶A◀ 4. Journal
5. Flange yoke
6. Sleeve yoke

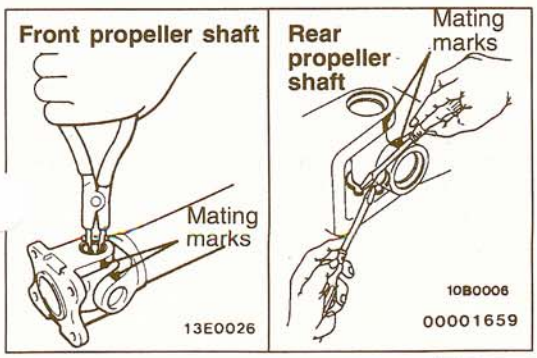


## DISASSEMBLY SERVICE POINTS

### ◀A▶ SNAP RING REMOVAL

Make mating marks on the yokes of the universal joint that is to be disassembled.

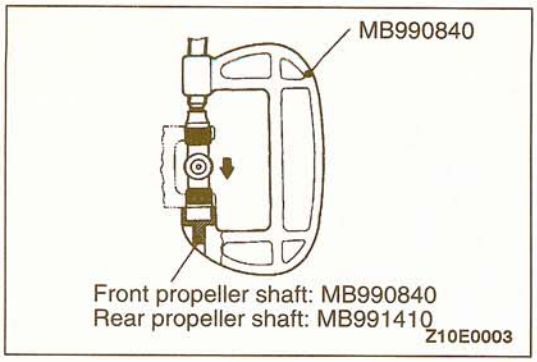


### ◀B▶ JOURNAL BEARING REMOVAL

(1) Use the special tool to press in the journal bearing on one side, and take out the journal bearing on the opposit side.

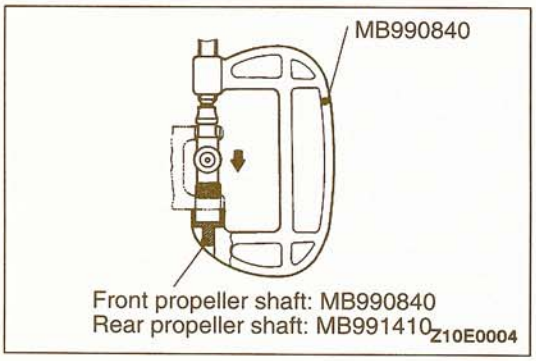


(2) Insert the special tool in the other side and press the journal to remove the first journal bearing that was pushed.

**Caution**
**Do not tap the journal bearings to remove them, as this will upset the balance of the propeller shaft.**

## REASSEMBLY SERVICE POINTS

### ▶A◀ JOURNAL/JOURNAL BEARING INSTALLATION

(1) Fit the journal onto the yoke.
(2) Use the special tool to press the journal bearing int the yoke until the snap ring groove is fully visible.

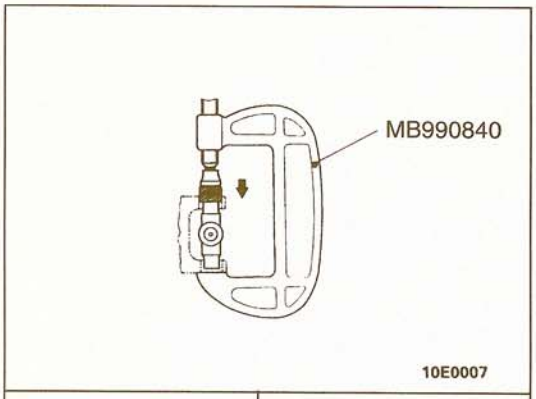


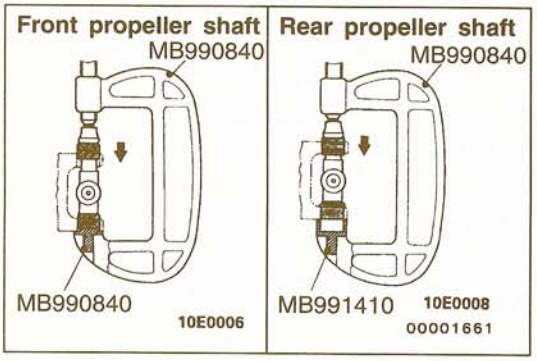


(3) Use the special tool to press the opposite side journal bearing into the yoke.

**Caution**
**Be careful when pressing the journal bearings, as if they are pressed at an angle, the inside of the journal bearings will be damaged by the journal.**

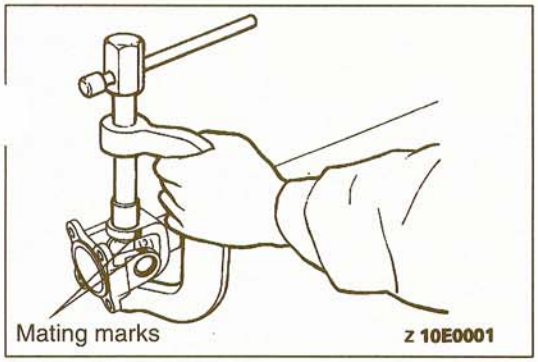


(4) Align the mating marks on the yoke and propeller shaft, and install the propeller shaft journal bearings in the method described in steps (2) and (3) above.

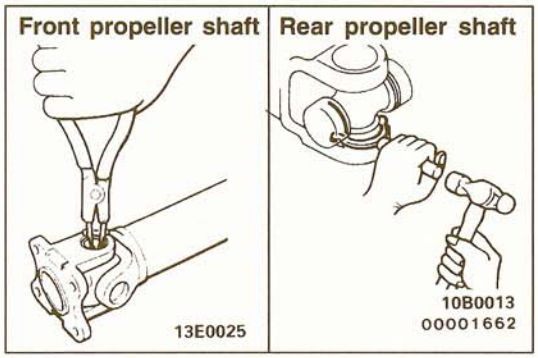


**▶B◀ SNAP RING INSTALLATION**

(1) Install a snap ring to one side of the journal.

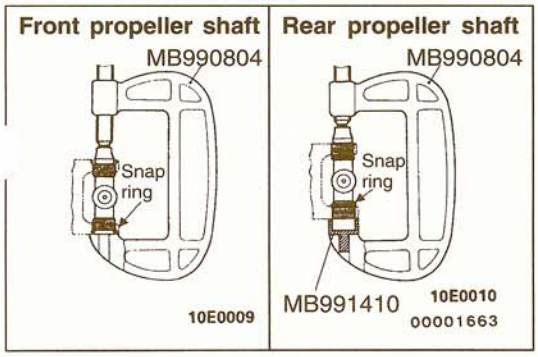


(2) Use the special tool at the opposite side of the installed snap ring to press in the journal bearing toward the snap ring.

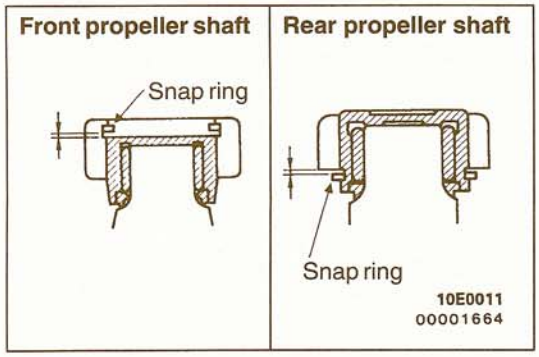


(3) Install the snap ring on the opposite side, and measure the clearance of the snap ring groove with a thickness gage.

**Standard value: 0.06 mm (.0024 in.) or less**

**Caution**
**Always use snap rings of equal thicknesses on both sides.**

(4) If the clearance exceeds the standard value, adjust by changing the thickness of the snap ring.

| Snap ring thickness mm (in.) | | Identification color |
|---|---|---|
| Front propeller shaft | 1.28 (.050) | – |
| | 1.31 (.052) | Yellow |
| | 1.34 (.053) | Blue |
| | 1.37 (.054) | Purple |
| Rear propeller shaft | 1.50 (.059) | – |
| | 1.55 (.061) | Yellow |
| | 1.60 (.063) | Blue |
| | 1.65 (.065) | Purple |

# FRONT AXLE

## CONTENTS

26109000058


AXLE HUB ..... 12

DIFFERENTIAL CARRIER ..... 38

DIFFERENTIAL CARRIER AND FREE-WHEELING CLUTCH ..... 33

DRIVE SHAFT ..... 20

FREE-WHEELING CLUTCH ..... 35

GENERAL SPECIFICATIONS ..... 2

INNER SHAFT ..... 29

KNUCKLE ..... 17

LUBRICANTS ..... 3

ON-VEHICLE SERVICE ..... 9

- Differential Carrier Oil Seal Replacement ..... 9
- Drive Shaft End Play Check ..... 9
- Front Axle Gear Oil Level Check ..... 9
- Front Axle Total Backlash Check ..... 9
- Solenoid Valve Operation Check ..... 11

SEALANTS AND ADHESIVES ..... 3

SERVICE SPECIFICATIONS ..... 2

SOLENOID VALVE AND VACUUM HOSE ..... 32

SPECIAL TOOLS ..... 3

TROUBLESHOOTING ..... 7

## GENERAL SPECIFICATIONS

26100020015

| Items | | | 3.0L-12 VALVE engine – Vehicles without wide fender | 3.0L-12 VALVE engine – Vehicles with wide fender | 3.0L-24 VALVE engine, 3.5L engine |
|---|---|---|---|---|---|
| Front axle hub bearing | | Type | Taper roller bearing | Taper roller bearing | Taper roller bearing |
| Drive shaft | Joint type | Outer | Birfield joint | Birfield joint | Birfield joint |
| | | Inner | Double-offset joint | Double-offset joint | Double-offset joint |
| Differential | Final drive gear type | | Hypoid gear | Hypoid gear | Hypoid gear |
| | Reduction ratio | | 4.625 | 4.875 | 4.636 |
| | Pinion gear type | | 2 pinion | 2 pinion | 2 pinion |

## SERVICE SPECIFICATIONS

26100030056

| Items | | | Standard value | Limit |
|---|---|---|---|---|
| Front axle total backlash mm (in.) | | | – | 11 (.43) |
| Drive shaft end play mm (in.) | | | 0.4–0.7 (.016–.028) | – |
| Solenoid valve resistance [at 20°C (68°F)] Ω | | | 36–46 | – |
| Front hub play in the axial direction mm (in.) | | | 0.05 (.0020) or less | – |
| Front hub turning resistance Nm (in.lbs.) [Spring scale reading N (lbs.)] | | | 0.3–1.3 (2.6–11.3) [5–18 (1.1–4.0)] | – |
| Opening dimension of the special tool (MB991561) mm (in.) | | When the B.J. boot band (small) is crimped | 2.9 (.114) | – |
| | | When the B.J. boot band (big) is crimped | 3.2 (.126) | – |
| Crimped width of the B.J. boot band mm (in.) | | | 2.4–2.8 (.094–.110) | – |
| Clearance between the B.J. boot (larger diameter side) and the stepped phase of the B.J. housing mm (in.) | | | 0.05–1.55 (.0020–.0610) | – |
| Setting of D.O.J. boot length mm (in.) | | | 77–83 (3.03–3.27) | – |
| Clutch gear play (bearing end play) mm (in.) | | | 0.05–0.30 (.0020–.0120) | – |
| Final drive gear backlash mm (in.) | | | 0.11–0.16 (.0043–.0063) | – |
| Drive gear runout mm (in.) | | | – | 0.05 (.0020) |
| Differential gear backlash mm (in.) | | | 0–0.076 (0–.0030) | 0.2 (.0079) |
| Drive pinion rotation torque Nm (in.lbs.) | Without oil seal | With anti-rust agent | 0.3–0.5 (2.6–4.3) | – |
| | | with gear oil applies | 0.15–0.25 (1.3–2.2) | – |
| | With oil seal | with anti-rust agent | 0.5–0.7 (4.3–6.1) | – |
| | | with gear oil applies | 0.35–0.45 (3.1–3.9) | – |

TSB Revision

## LUBRICANTS

26100040066

| Items | Specified lubricants | Quantity |
|---|---|---|
| Front axle gear oil (Front differential) | Hypoid gear oil API classification GL-5 or higher SAE viscosity No. 90, 80W | 1.20 $dm^3$ (1.27 qts.) |
| D.O.J. boot grease | Repair kit grease | 100 g (3.5 oz.) |
| B.J. boot grease | Repair kit grease | 130 g (4.6 oz.) |

## SEALANTS AND ADHESIVES

26100050021

| Items | Specified sealants and adhesives |
|---|---|
| Contact surface of drive flange and front axle hub | 3M ATD Part No. 8661, 8663 or equivalent |
| Contact surface of hub cap and drive flange | |
| Contact surface of differential cover and differential carrier | |
| Free-wheeling clutch assembly | |
| Drive gear threaded hole | 3M Stud Locking Part No. 4170 or equivalent |

## SPECIAL TOOLS

26100060062

| Tool | Tool number and name | Supersession | Application |
|---|---|---|---|
|  00004349 | MB990241<br>Drive shaft attachment | MB990241-01 | Insertion of inner shaft assembly (use with MB990211-01) |
|  | MB990211<br>Sliding hammer | MB990211-01 | Removal of housing tube oil seal<br>Insertion of inner shaft assembly (use with MB990241-01) |
|  00004350 | MB990925<br>Bearing and oil seal installer set | MB990925-01 | Press-fitting of front axle hub bearing outer race MB990935-01<br>Press-fitting of drive pinion bearing outer race MB990933-01, MB990934-01, MB990936-01<br>Press-fitting of differential carrier oil seal MB990934-01<br>Press-fitting of free wheel clutch oil seal MB990926-01<br>Press-fitting of free wheel clutch needle bearing MB990927-01 |

| Tool | Tool number and name | Supersession | Application |
|---|---|---|---|
|  | MB990938<br>Handle | MB990938-01 | Press-fitting of front axle hub bearing outer race<br>Press-fitting of front axle hub oil seal<br>Press-fitting of knuckle needle bearing<br>Press-fitting of knuckle oil seal<br>Press-fitting of housing tube oil seal<br>Press-fitting of differential carrier oil seal<br>Press-fitting of drive pinion bearing outer race<br>Press-fitting of free wheel clutch oil seal<br>Press-fitting of free wheel clutch needle bearing |
|  | MB990954<br>Lock nut wrench | MB990954-01 | Removal and adjustment of lock nut |
|  <br>00004353 | MB990955<br>Oil seal installer | MB990955-01 | Press-fitting of front axle hub oil seal<br>Press-fitting of housing tube oil seal |
|  <br>00004351 | MB990811<br>Side bearing cup remover step plate | MB990811-01 | Removal of side bearing inner race |
|  | MB991113, MB990635, MB991406<br>Steering linkage puller | – | Removal of knuckle<br>Disconnecting the lower ball joint and upper ball joint<br>Removal of knuckle<br>Disconnecting the tie rod |
|  <br>00004352 | MB990956<br>Needle bearing installer | MB990956-01 | Press-fitting of knuckle needle bearing (use with MB990938-01) |
|  <br>00004353 | MB990985<br>Oil seal installer | MB990985-01 | Press-fitting of knuckle oil seal (use with MB990938-01) |
| 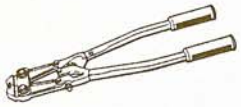 | MB991561<br>Boot band crimping tool | – | Installation of B.J. boot band (resin boot band) |

**TSB Revision**

| Tool | Tool number and name | Supersession | Application |
|---|---|---|---|
| 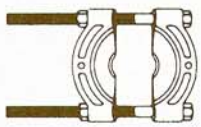 00004354 | MD998348<br>Bearing separator | MD998348-01 | Removal and press-fitting of inner shaft bearing |
|  00004355 | MB990339<br>Pinion carrier bearing puller | MB990339-01 | Removal of side bearing inner race (use with MB990811-01)<br>Removal of drive pinion front bearing inner race |
|  00004294 | MIT303173<br>Insert | MIT303173 | |
|  | MIT44801<br>Collet set | MIT44801 | Removal of side bearing inner race (use with MB990811-01)<br>Removal of drive pinion front bearing inner race |
| 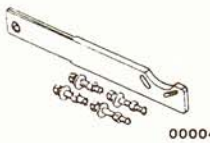 00004356 | MB990767<br>End yoke holder | MB990767-01 | Holding of end yoke |
|  00004357 | MB990901<br>Pinion height gage set | MB990901-01 | Adjustment of pinion height |
|  | MB990802<br>Bearing installer | MB990802-01 | Press-fitting of drive pinion front bearing inner race<br>Press-fitting of side bearing inner race |
|  00004358 | MB990031<br>Drive pinion oil seal installer | MB990031-01 | Press-fitting of drive pinion oil seal |
| 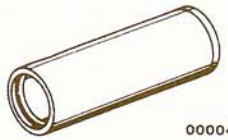 00004295 | MIT304180<br>Handle | MIT304180 | |

TSB Revision

| Tool | Tool number and name | Supersession | Application |
|---|---|---|---|
| 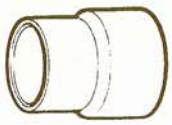 | MB990799<br>Ball joint dust shield installer | MB990799-01 | Press-fitting of free wheel clutch bearing |
| 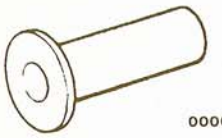 <br>00004296 | MIT310424<br>Drive pinion oil seal installer | MIT310424 | Press-fitting of free wheel clutch oil seal |
|  | MB990890<br>Rear suspension bushing base | MB990890-01 | Press-fitting of free wheel clutch bearing |

| MB990925-01 | Tool number | Installer disc O.D. mm (in.) |
|---|---|---|
|  <br>00004350 | MB990926-01 | 39.0 (1.54) |
| | MB990927-01 | 45.0 (1.77) |
| | MB990928-01 | 49.5 (1.95) |
| | MB990929-01 | 51.0 (2.01) |
| | MB990930-01 | 54.0 (2.13) |
| | MB990931-01 | 57.0 (2.24) |
| | MB990932-01 | 61.0 (2.40) |
| | MB990933-01 | 63.5 (2.50) |
| | MB990934-01 | 67.5 (2.66) |
| | MB990935-01 | 71.5 (2.81) |
| | MB990936-01 | 75.5 (2.97) |
| | MB990937-01 | 79.0 (3.11) |

# TROUBLESHOOTING

26100070034

## FREE-WHEELING CLUTCH

| Symptom | Probable cause | Remedy |
|---|---|---|
| Does not lock | Negative pressure leakage | Correct or replace vacuum hose |
| | Vacuum tank damaged | Replace |
| | Check valve damaged | |
| | Actuator assembly damaged | |
| | Shift fork damaged | |
| | Clutch gear damaged | |
| | Main shaft damaged | |
| | Thrust bushing damaged | |
| | Actuator assembly attaching bolt loose | Retighten attaching bolts |
| Locks but does not become free | Foreign substances on tooth surfaces of main shaft and clutch sleeve | Clean tooth surfaces or replace |
| | Foreign substances on tooth surfaces of clutch sleeve and clutch gear | |

## DRIVE SHAFT, INNER SHAFT

| Symptom | Probable cause | Remedy |
|---|---|---|
| Noise during wheel rotation | Housing tube bent | Replace |
| | Inner shaft bent | |
| | Inner shaft bearing worn, pounding | Replace |
| | Drive shaft assembly worn damaged, bent | Check or replace |
| Noise due to excessive play of wheel in turning direction | Inner shaft and side gear serration play | Replace |
| | Drive shaft and side gear serration play | |

## DIFFERENTIAL

| Symptom | Probable Cause | Remedy |
|---|---|---|
| Constant noise | Incorrect adjustment of drive gear and drive pinion (poor meshing) | Correct or replace |
| | Loose, worn or damaged side bearing | Correct or replace |
| | Loose, worn or damaged drive pinion bearing | Correct or replace |
| | Worn drive gear or drive pinion | Correct or replace |
| | Worn side gear thrust washer or pinion shaft | Replace |
| | Deformed drive gear or differential case | Replace |
| | Damaged gear | Replace |
| | Foreign material | Remove the foreign material and check, and replace if necessary. |
| | No oil | Fill or change |
| Gear noise while driving | Poor gear engagement | Correct or replace |
| | Incorrect gear adjustment | Correct or replace |
| | Incorrect drive pinion preload adjustment | Correct or replace |
| | Damaged gear | Replace |
| | Foreign material | Remove the foreign material and check, and replace if necessary. |
| | Insufficient oil | Fill or change |
| Gear noise while coasting | Incorrect drive pinion rotation torque adjustment | Correct or replace |
| | Damaged differential gear | Replace |
| Bearing noise while driving or coasting | Cracked or damaged drive pinion rear bearing | Replace |
| Noise while turning | Loose side bearing | Replace |
| | Damaged side gear, pinion gear or pinion shaft | Replace |
| Heat | Incorrect differential gear backlash Excessive preload | Adjust |
| | Insufficient oil | Fill or change |
| Oil leakage | Clogged vent plug | Clean or replace |
| | Cover is not tightened Malfunction of seal | Re-tighten, apply sealant or replace the gasket. |
| | Worn or damaged oil seal | Replace |
| | Excessive oil | Adjust the oil level. |

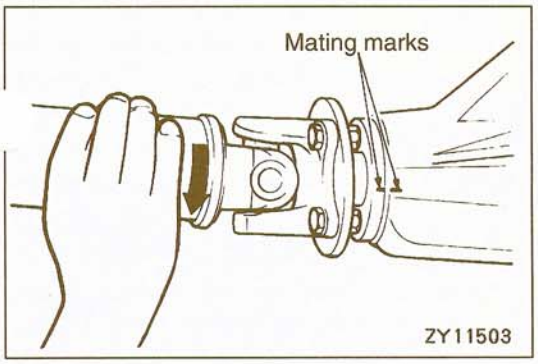


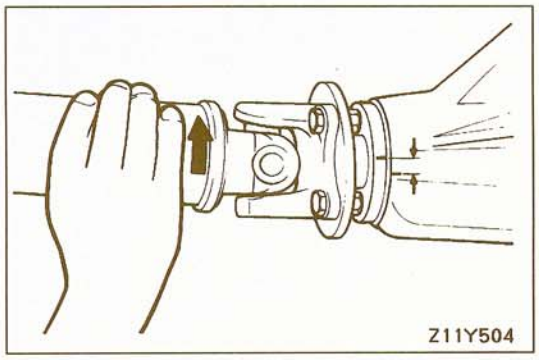


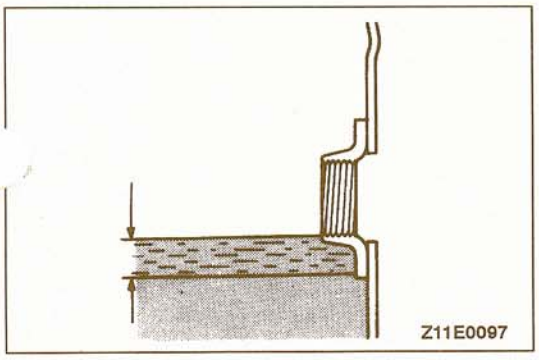


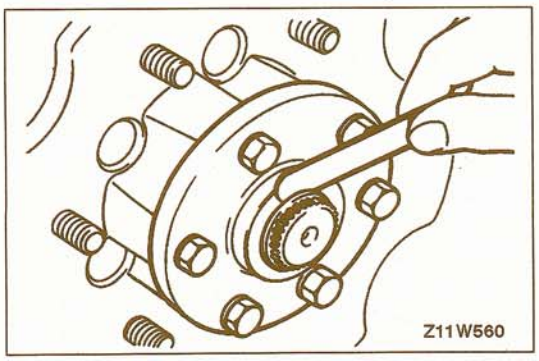


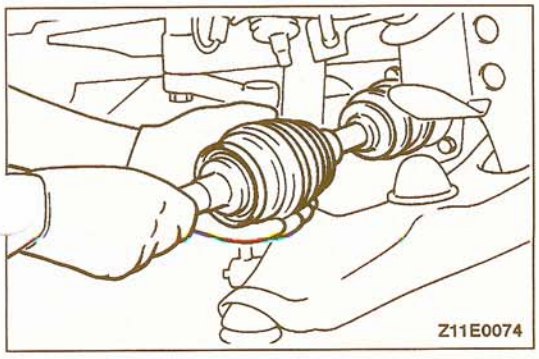


# ON-VEHICLE SERVICE 26100130015

## FRONT AXLE TOTAL BACKLASH CHECK

1. If the vehicle vibrates and produces a booming sound due to an imbalance in the drive system, measure the front axle total backlash by the following procedure to see if the differential carrier assembly requires removal.
   (1) Place the transfer control lever in the "4H" position and drive the vehicle until the 4WD indicator changes from flashing to illuminated.
   (2) Hold the wheels and place the transfer control lever in the "2H" position.
   (3) Turn the companion flange clockwise until all play is eliminated, and then align the mating mark on the dust cover with the mating mark on the differential carrier.
   (4) Turn the companion flange clockwise until all play is eliminated and measure the distance through which the mating marks moved.

   **Limit: 11 mm (.43 in.)**
2. If the backlash exceeds the limit, remove the differential carrier assembly and final drive gear. Then check the differential gear meshing condition and the looseness of the drive shaft or inner shaft splines.

## FRONT AXLE GEAR OIL LEVEL CHECK 26200090019

Remove the filler plug and check the gear oil level. Check that the gear oil level is not 8 mm (.31 in.) below the bottom of the filler plug hole.

**Specified gear oil:**
**Hypoid gear oil API classification GL-5 or higher, SAE viscosity No. 90, 80W [1.20 $dm^3$ (1.27 qts.)]**

## DRIVE SHAFT END PLAY CHECK 26100140018

1. Jack up the vehicle and remove the front wheels.
2. Remove the hub cap.
3. Manually push the drive shaft in the direction in which it will closely contact the knuckle.
4. Use a feeler gauge to measure the clearance between the drive flange and the snap ring as shown in the illustration.

   **Standard value: 0.4–0.7 mm (.016–.028 in.)**
5. If the play is outside the standard value, adjust by adding or removing shims.

## DIFFERENTIAL CARRIER OIL SEAL REPLACEMENT 26200100019

1. Remove the under cover.
2. Remove the front hub and knuckle assembly.
3. Remove the left drive shaft.

**Caution**
**When pulling the left drive shaft from the differential carrier assembly, be careful that the drive shaft spline does not damage the oil seal.**

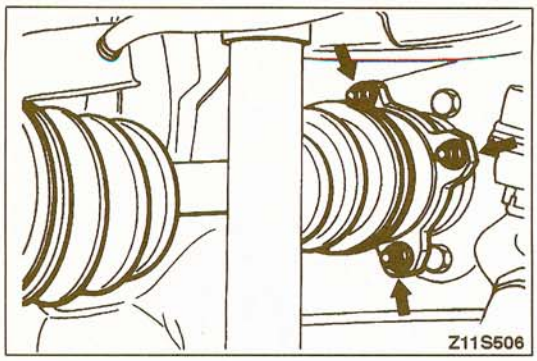


4. Remove the right drive shaft from the inner shaft assembly.
5. After removing the shock absorber (R.H.) lower mounting bolt, remove the inner shaft.

**Caution**
**When pulling the inner shaft out from the differential carrier, be careful that the spline of the inner shaft does not damage the oil seal.**

6. Remove the actuator mounting bolt from the housing tube, and then remove the harness from the clamp.
7. Remove the differential mounting bracket (R.H.) and housing tube.
8. Use the special tool to remove the oil seal.

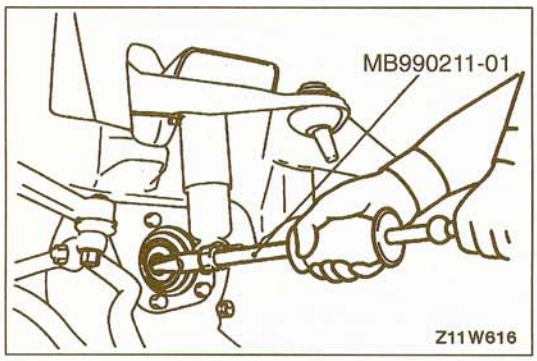


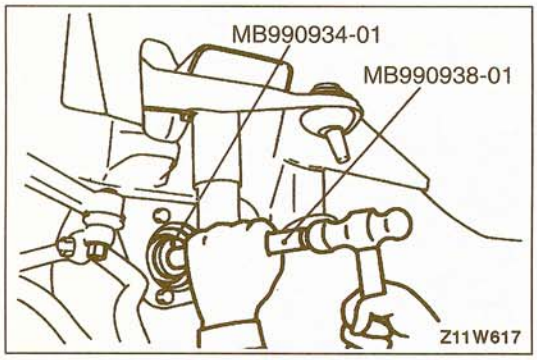


9. Press-fit the oil seal firmly by using the special tools.

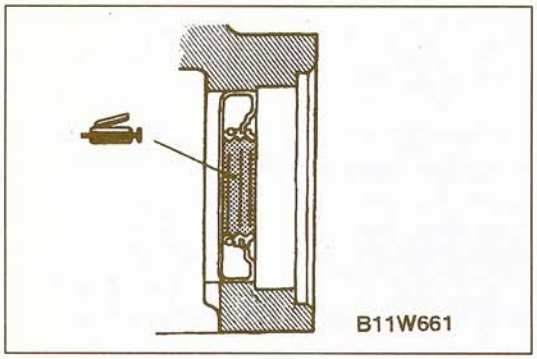


10. Apply multi-purpose grease to the lip of the oil seal and install it to the drive shaft (L.H.).
    For the right side, apply multi-purpose grease to the lip of the oil seal and install to the housing tube and differential mounting bracket (R.H.).

11. Install the inner shaft and drive shaft (R.H.).

**Caution**
1. **Do not damage the lip of the oil seal.**
2. **The circlip attached to the B.J. side spline of the drive shaft should be replaced with a new clip.**

12. Install the actuator and secure the harness with the clan
13. Install the shock absorber.
14. Install the hub and knuckle assembly.
15. Install the under cover.

**TSB Revision**

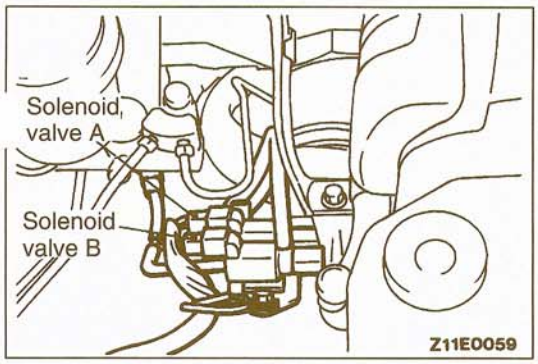


## SOLENOID VALVE OPERATION CHECK 26100150011

1. Remove the vacuum hoses (blue stripe, yellow stripe) from the solenoid valves.
2. Disconnect the harness connectors.

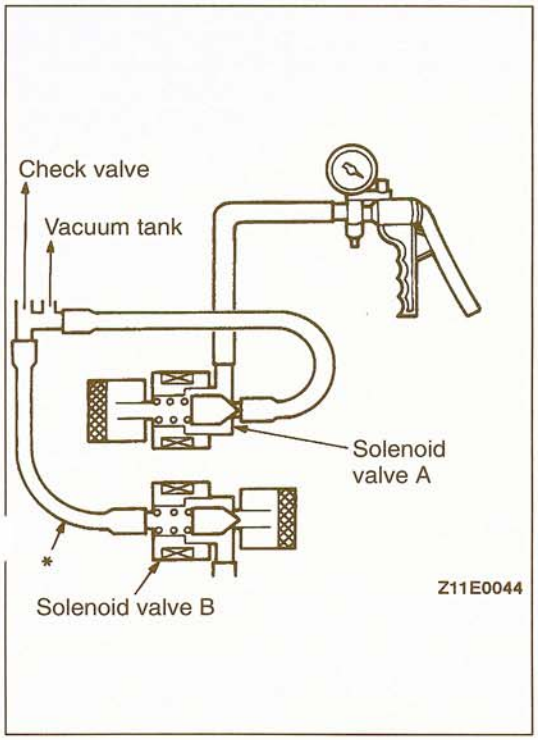


3. Connect a hand vacuum pump to solenoid valve A. Apply negative pressure and carry out the following inspections.
   (1) Even if the hand pump is operated with no other operation, no negative pressure develops.
   (2) Even when battery positive voltage is applied to solenoid A, the condition is the same as in (1). But when the vacuum hose of solenoid B is blocked by bending at the * mark, negative pressure is maintained.
   (3) When battery positive voltage is applied to solenoids A and B, negative pressure is maintained.

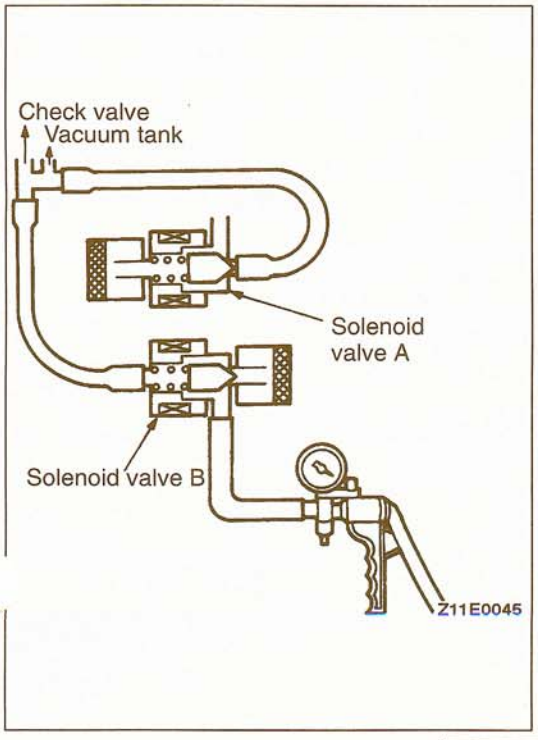


4. Connect the hand vacuum pump to solenoid valve B. Apply negative pressure and carry out the following inspections.
   (1) With no other operation, negative pressure is maintained.
   (2) When battery positive voltage is applied to solenoid B, the negative pressure equalizes.
   (3) When battery positive voltage is applied to solenoid A, the negative pressure equalizes.
5. Measure the resistance of the solenoid valves.

   **Standard value: 36–46 Ω [at 20°C (68°F)]**

# AXLE HUB

26100170055

## REMOVAL AND INSTALLATION

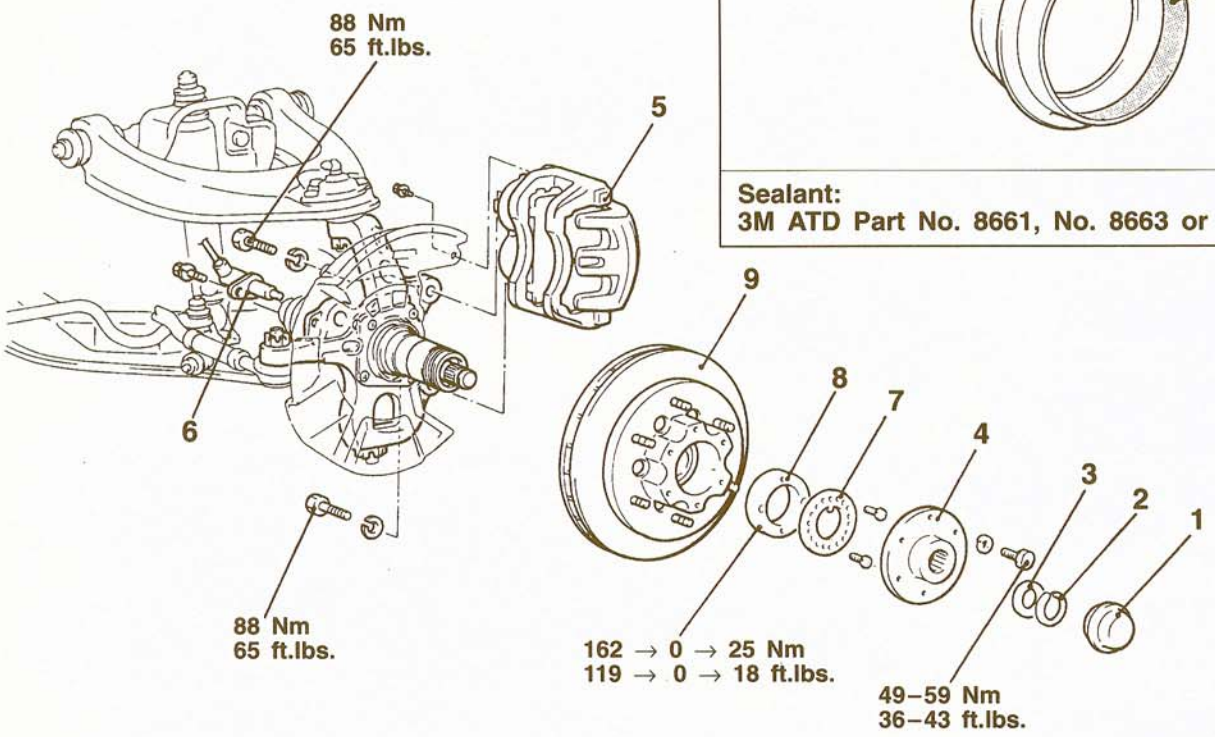


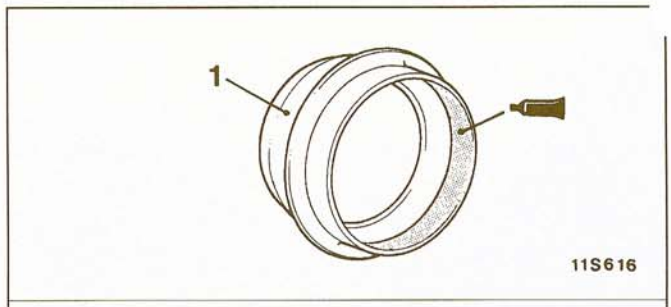


**Sealant:**
**3M ATD Part No. 8661, No. 8663 or equivalent**




**Front hub shim set**

11E0149
00001665

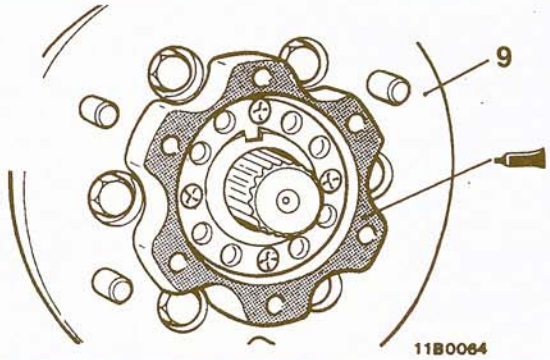


**Sealant: 3M ATD Part No. 8661, No. 8663 or equivalent**

**Caution**
**Make sure that there is no excess specified sealant on the hub outside surface.**

**Removal steps**

1. Hub cap
▶B◀ • Drive shaft end play adjustment
◀A▶ 2. Snap ring
3. Shim
4. Drive flange
◀B▶ 5. Front brake assembly
6. Speed sensor <Vehicles with ABS> (Refer to GROUP 35C – Wheel Speed Sensor.)
7. Lock washer
▶A◀ • Wheel bearing preload adjustment
◀C▶ 8. Lock nut
◀C▶ 9. Front hub assembly

**TSB Revision**

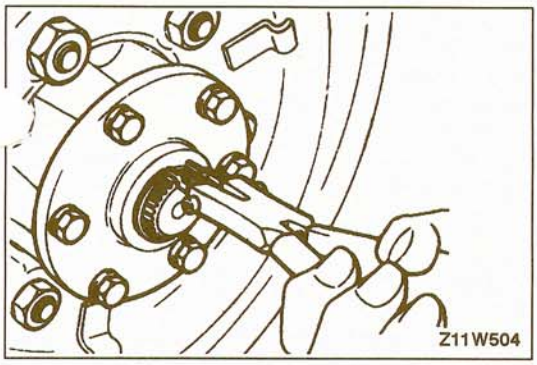


## REMOVAL SERVICE POINTS

### ◀A▶ SNAP RING REMOVAL

Use snap ring pliers to remove the snap ring from the drive shaft.

**Caution**
**The proper tool for removing and installing the snap ring is a pair of snap ring pliers. Using a screwdriver or other tool can deform or spread the snap ring beyond its yield point. Be sure to use only snap ring pliers for removing and installing this snap ring.**

### ◀B▶ FRONT BRAKE ASSEMBLY REMOVAL

(1) Remove the front brake assembly with the brake hose connected.
(2) Use wire to suspend the front brake assembly from the upper arm so that the front brake assembly won't fall.

**Caution**
**Do not twist the brake hose.**

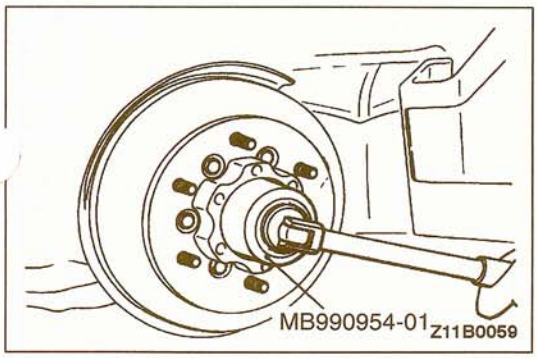


### ◀C▶ LOCK NUT/FRONT HUB ASSEMBLY REMOVAL

(1) After removing the lock washer, remove the lock nut with the special tool.
(2) Remove the front hub assembly from the knuckle together with the inner and outer bearings.

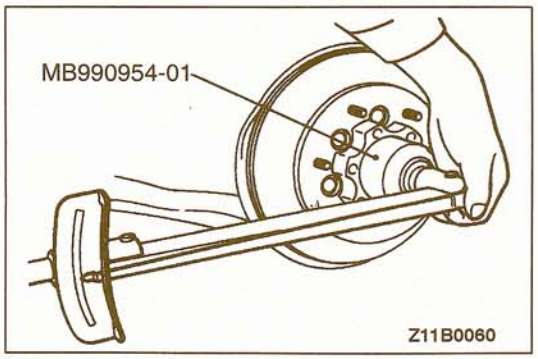


## INSTALLATION SERVICE POINTS

### ▶A◀ WHEEL BEARING PRELOAD ADJUSTMENT

(1) Use the special tool to tighten the lock nut by the following procedure.
   1. Tighten to 162 Nm (119 ft.lbs.).
   2. Loosen to 0 Nm (0 ft.lbs.).
   3. Re-tighten to 25 Nm (18 ft.lbs.) and then loosen 30–40°.

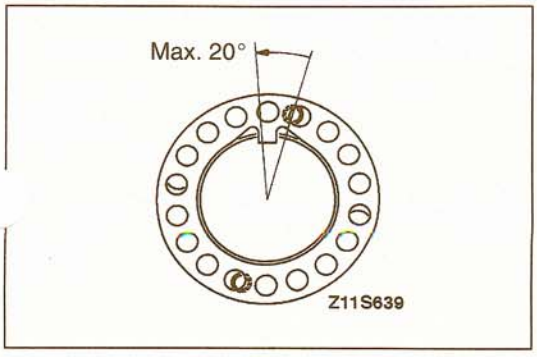


(2) Install the lock washer. If the lock washer holes are not aligned with the lock nut holes, move the lock nut within a range of not more than 20° until the holes are aligned.

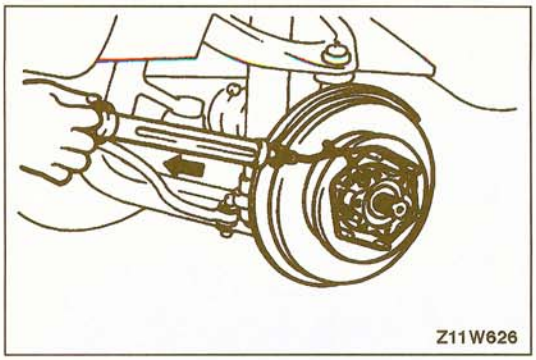
Z11W626

(3) Loosen the lock nut approximately 30 to 40 degrees to adjust the front hub's turning resistance and play in the axial direction so that they are at the standard values

**Standard value:**
**0.3–1.3 Nm (2.6–11.3 in.lbs.)**
**[Spring scale reading 5–18 N (1.1–4.0 lbs.)]**

**Standard value: 0.05 mm (.0020 in.) or less**

NOTE
If adjustment is not possible, the bearing may be incorrectly installed; check and repair if necessary. The lubrication condition should also be checked.

(4) Install the lock washer. If the lock washer holes are not aligned with the lock nut holes, loosen the lock nut to align them.

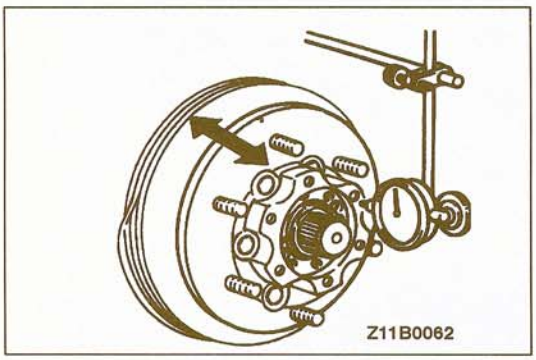
Z11B0062

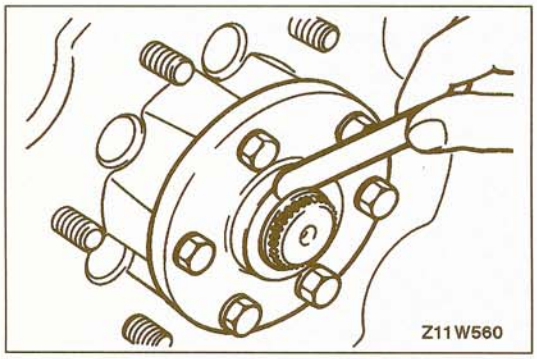
Z11W560

### ▶B◀ DRIVE SHAFT END PLAY ADJUSTMENT

After installing the shim and snap ring, check the drive shaft end play by the following procedure.

(1) Install the shim and snap ring to the drive shaft.
(2) Push the drive shaft in by hand toward the knuckle unt they touch.
(3) Measure the clearance between the drive flange and the shim with a feeler gage as shown in the illustration.

**Standard value: 0.4–0.7 mm (.016–.028 in.)**

(4) If the amount of play is outside the standard value, adjust by selecting a shim that will bring the play to the standard value.

## INSPECTION

26100180058

- Check the wheel bearing for seizure, discoloration and rough raceway surface.
- Check the front hub for cracks.
- Check the oil seals for cracks or damage.

## DISASSEMBLY AND REASSEMBLY

26100190037

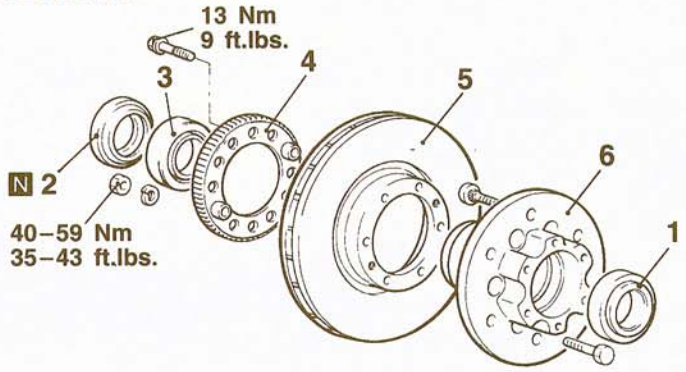


11E0203

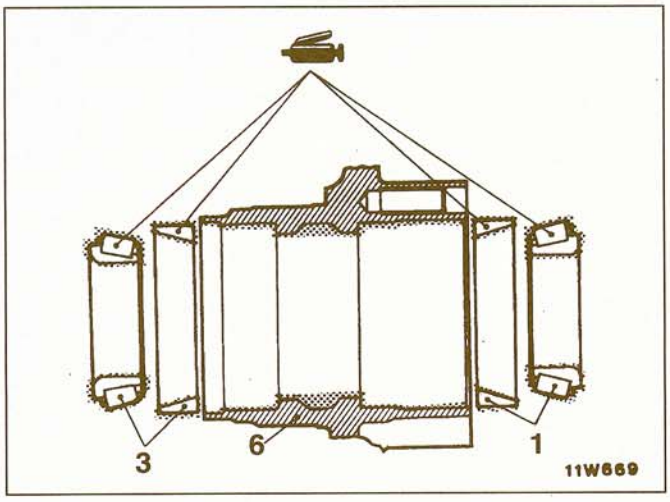


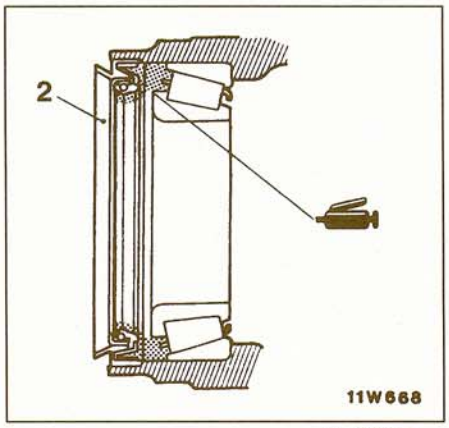


00003992

**Disassembly steps**

1. Outer bearing
2. Oil seal ▶A◀
3. Inner bearing
4. Rotor ◀A▶
5. Brake disc
6. Front hub

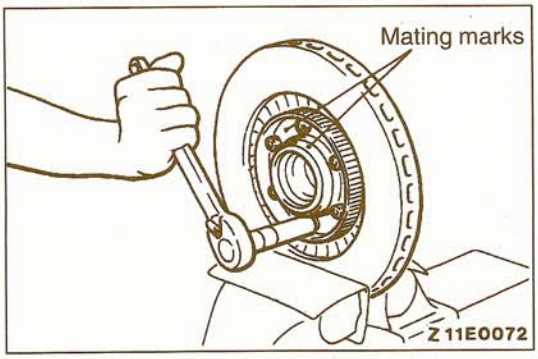


### DISASSEMBLY SERVICE POINT

#### ◀A▶ BRAKE DISC REMOVAL

Make mating marks on the brake disc and front hub, and then separate the front hub and brake disc, if necessary.

**Caution**
**Lock the disc in a vise and grip it with a copper or aluminum board.**

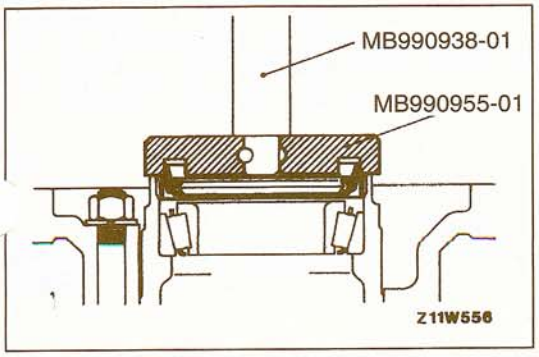


### REASSEMBLY SERVICE POINT

#### ▶A◀ OIL SEAL INSTALLATION

(1) Apply multi-purpose grease to the lip of the oil seal and to the inside surface of the front hub.
(2) Apply multi-purpose grease to the inner bearing inner race, and then install the inner race to the front hub.
(3) Use the special tools to press-fit the new oil seal to the front hub until the oil seal is flush with the front hub end face.

TSB Revision

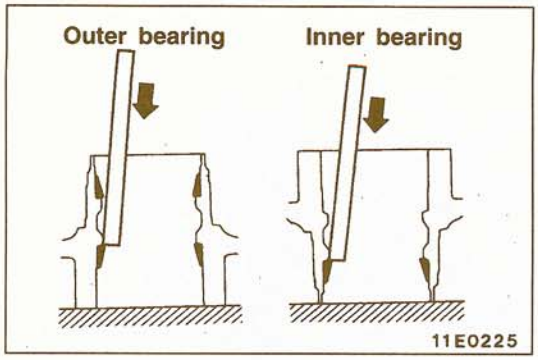


## BEARING REPLACEMENT

26100510017

(1) Wipe off any grease on the inside surface of the front hub.
(2) Drive out the inner and outer bearing outer races L tapping them uniformly.
(3) Apply multi-purpose grease to the outside surfaces of the new inner and outer bearing outer races.

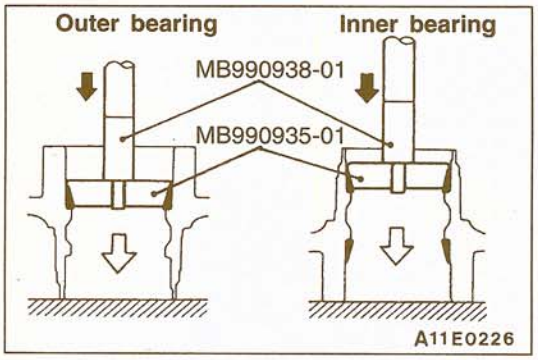


(4) Use the special tools to press-fit the inner and outer bearing outer races.

NOTE
The bearing inner race and bearing outer race should be replaced as an assembly.

# KNUCKLE

26100240039

## REMOVAL AND INSTALLATION

**Pre-removal and post-installation Operation**
- Front Hub Removal and Installation (Refer to P.26-12.)

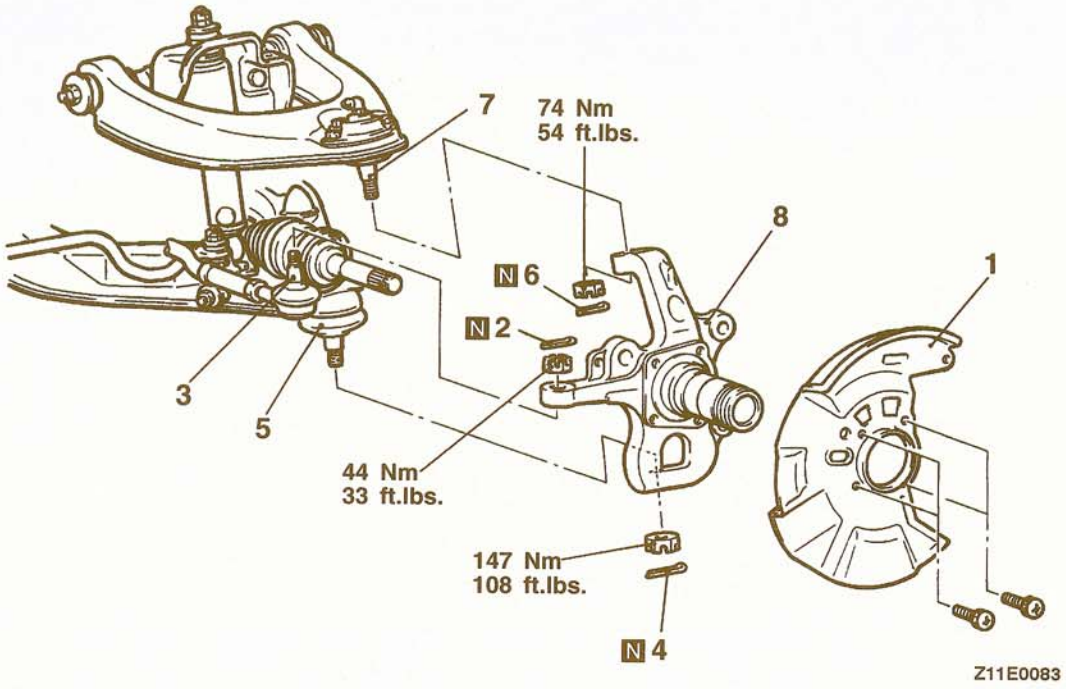


**Removal steps**

1. Dust cover
2. Cotter pin
◀A▶ 3. Tie rod assembly and knuckle connection
4. Cotter pin
◀B▶ 5. Lower ball joint and knuckle connection
◀B▶ 6. Cotter pin
7. Upper ball joint and knuckle connection
8. Knuckle

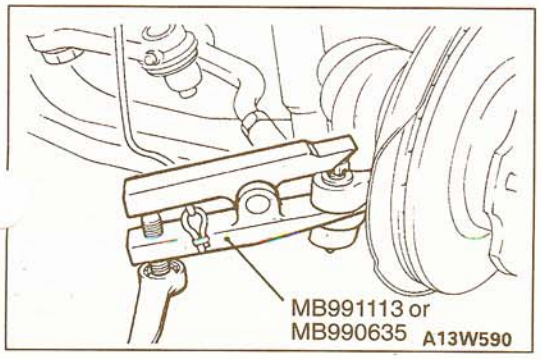


## REMOVAL SERVICE POINTS

### ◀A▶ TIE ROD ASSEMBLY AND KNUCKLE DISCONNECTION

Use the special tool to disconnect the tie rod from the knuckle.

**Caution**

1. **Use a cord to bind the special tool closely so that it will not become separated.**
2. **The nut should only be loosened, not removed.**

**TSB Revision**

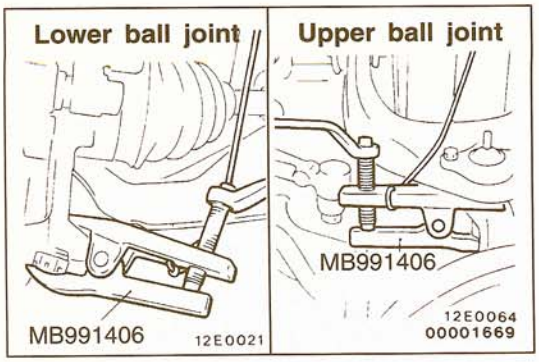


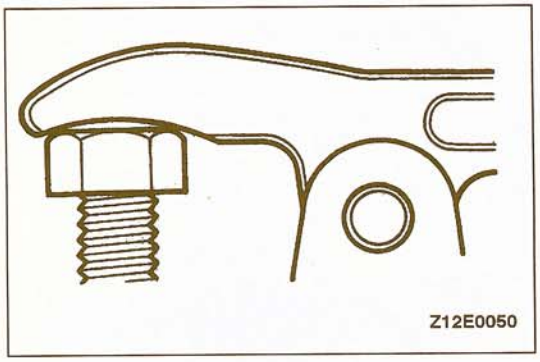


### ◀B▶ LOWER BALL JOINT AND KNUCKLE/UPPER BALL JOINT AND KNUCKLE DISCONNECTION

**Caution**

1. **Support the lower arm with a jack when removing the knuckle from the lower ball joint or the upper ball joint.**
2. **After the knuckle has been removed, lower the jack slowly.**
3. **Use a cord to bind the special tool closely so that it will not become separated.**
4. **The nut should only be loosened, not removed.**
5. **Insert the special tool securely.**

## INSPECTION

26100250025

- Check the needle bearing for wear or damage.
- Check the knuckle for cracks or bends.
- Check the knuckle spindle for wear or pounding.

## DISASSEMBLY AND REASSEMBLY

26100320016

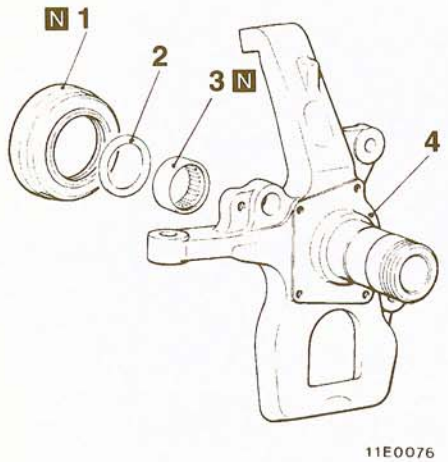


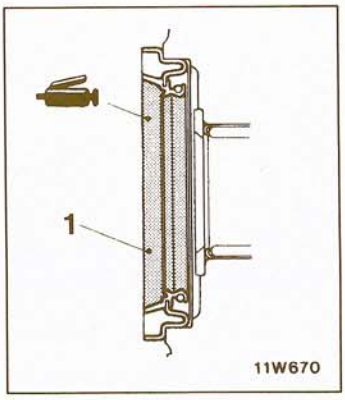


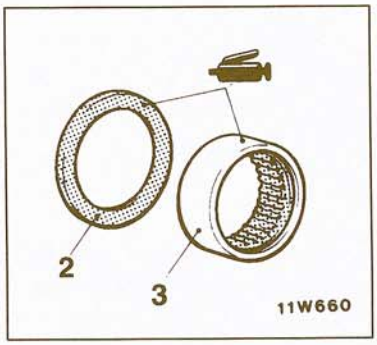


00001670

**Disassembly steps**

◀A▶ ▶C◀ 1. Oil seal
▶B◀ 2. Spacer
◀A▶ ▶A◀ 3. Needle bearing
4. Knuckle

**TSB Revision**

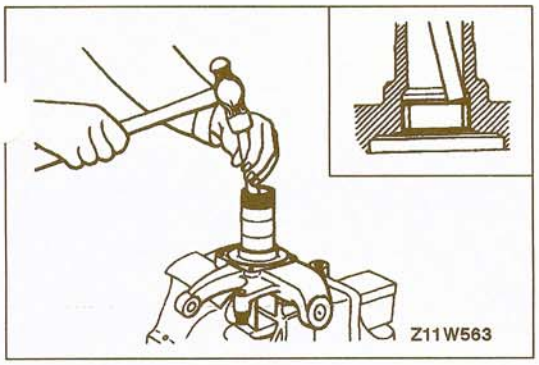


## DISASSEMBLY SERVICE POINT

### ◀A▶ NEEDLE BEARING REMOVAL

(1) Remove the oil seal and take out the spacer.
(2) Drive out the needle bearing by tapping the needles uniformly.

**Caution**
**Once removed, the needle bearing must not be reused.**

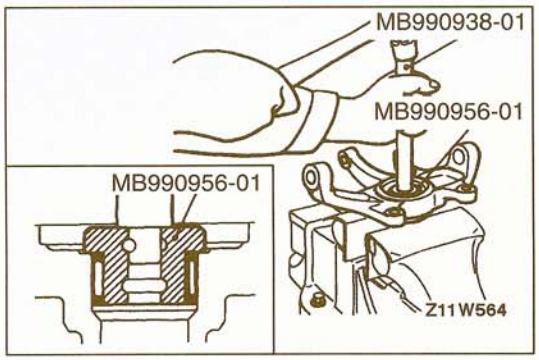


## REASSEMBLY SERVICE POINTS

### ▶A◀ NEEDLE BEARING INSTALLATION

(1) Apply multi-purpose grease to the roller surface of the new needle bearing.
(2) Use the special tools to press-fit the needle bearing until it is flush with the knuckle end face.

**Caution**
**Use care to prevent driving the needle bearing too far in.**

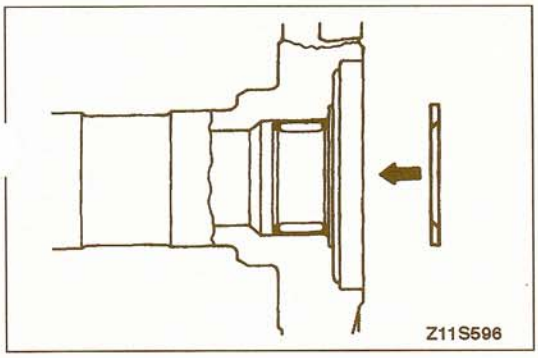


### ▶B◀ SPACER INSTALLATION

(1) Apply multi-purpose grease to the knuckle attachment surface of the spacer.
(2) Install the spacer to the knuckle with the chamfered side toward the center of the vehicle.

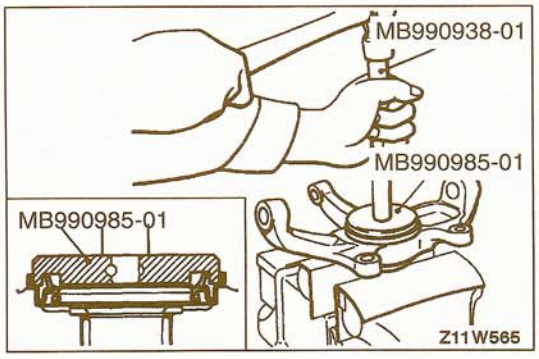


### ▶C◀ OIL SEAL INSTALLATION

(1) Use the special tools to press-fit the new oil seal until it is flush with the knuckle end face.
(2) Apply multi-purpose grease to the inside and lip of the oil seal.

# DRIVE SHAFT

26100350077

## REMOVAL AND INSTALLATION

**Pre-removal and Post-installation Operation**
- Under Cover Removal and Installation

### Left drive shaft

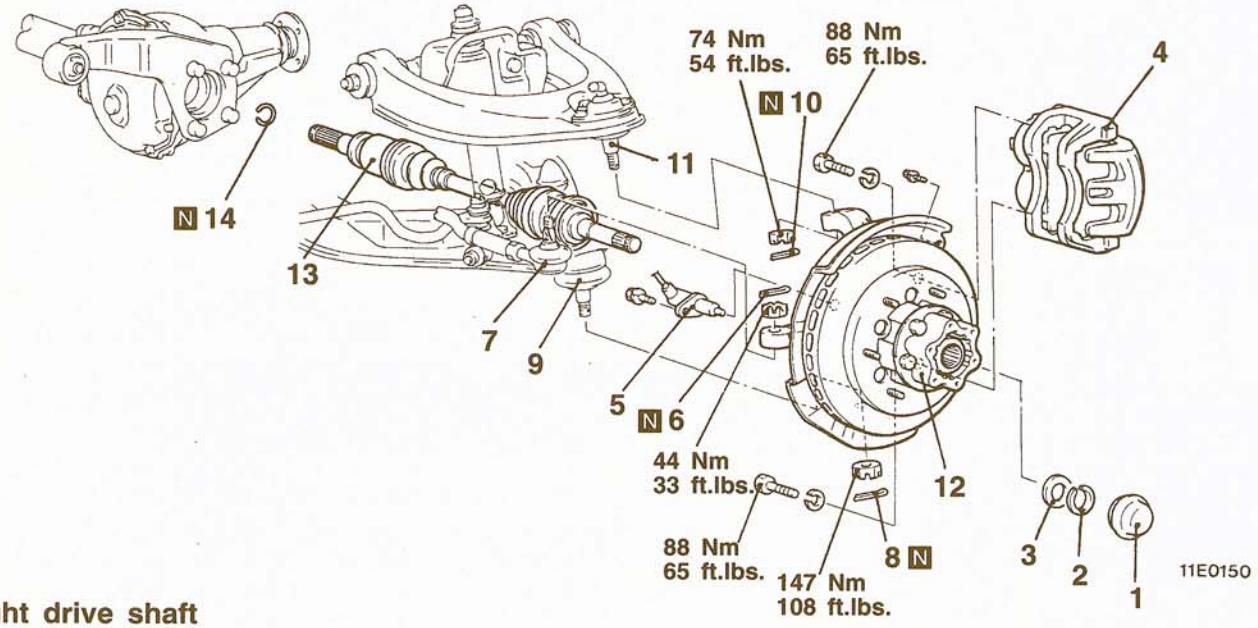


### Right drive shaft

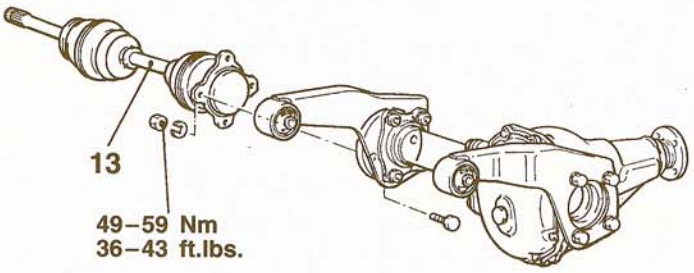


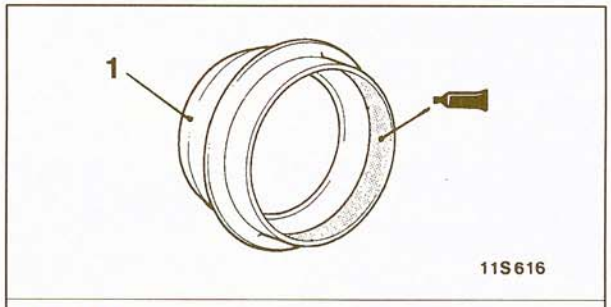


**Sealant:**
**3M ATD Part No. 8661, No. 8663 or equivalent**

**Removal steps**

1. Hub cap
◀A▶ 2. Snap ring
3. Shim
◀B▶ 4. Front brake assembly
5. Speed sensor <Vehicles with ABS> (Refer to GROUP 35C – Wheel Speed Sensor.)
6. Cotter pin
◀C▶ 7. Tie rod assembly and knuckle connection
8. Cotter pin
◀D▶ 9. Lower ball joint and knuckle connection
10. Cotter pin
◀D▶ 11. Upper ball joint knuckle connection
12. Front hub and knuckle assembly
◀E▶ ▶A◀ 13. Drive shaft
14. Circlip

**TSB Revision**

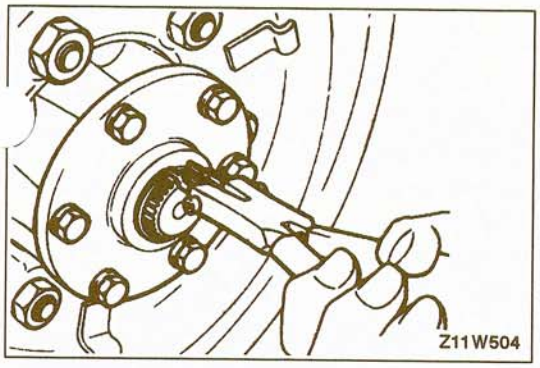


## REMOVAL SERVICE POINTS

### ◀A▶ SNAP RING REMOVAL

Use snap ring pliers to remove the snap ring from the drive shaft.

**Caution**
**The proper tool for removing and installing the snap ring is a pair of snap ring pliers. Using a screwdriver or other tool can deform or spread the snap ring beyond its yield point. Be sure to use only snap ring pliers for removing and installing this snap ring.**

### ◀B▶ FRONT BRAKE ASSEMBLY REMOVAL

(1) Remove the front brake assembly with the brake hose connected.
(2) Use wire to suspend the front brake assembly from the upper arm so that the front brake assembly won't fall.

**Caution**
**Do not twist the brake hose.**

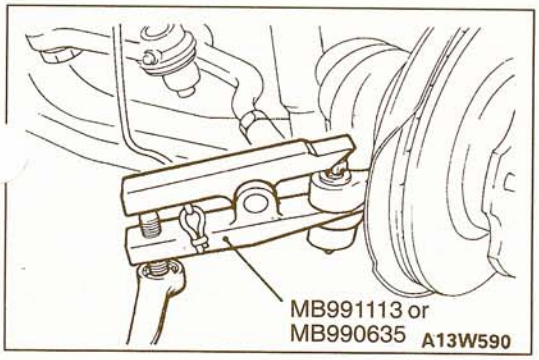


### ◀C▶ TIE ROD ASSEMBLY AND KNUCKLE DISCONNECTION

Use the special tool to disconnect the tie rod from the knuckle.

**Caution**
1. **Use a cord to bind the special tool closely so that it will not become separated.**
2. **The nut should only be loosened, not removed.**

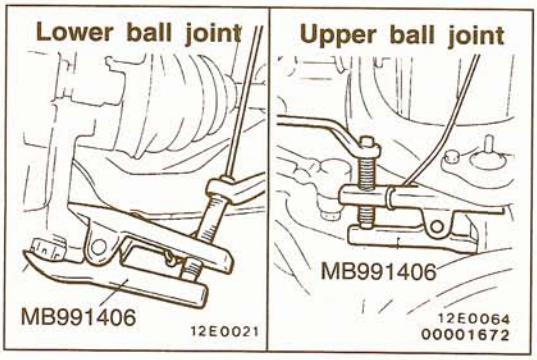


### ◀D▶ LOWER BALL JOINT AND KNUCKLE/UPPER BALL JOINT AND KNUCKLE DISCONNECTION

**Caution**
1. **Support the lower arm with a jack when removing the knuckle from the lower ball joint or the upper ball joint.**
2. **After the knuckle has been removed, lower the jack slowly.**
3. **Use a cord to bind the special tool closely so that it will not become separated.**
4. **The nut should only be loosened, not removed.**
5. **Insert the special tool securely.**

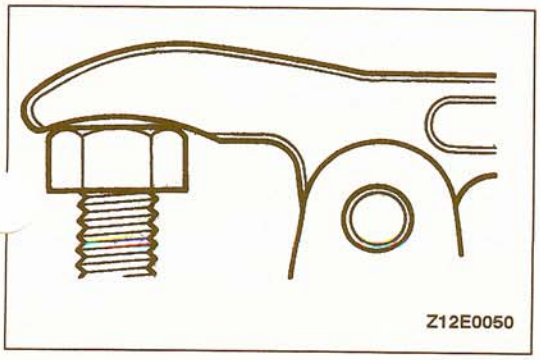

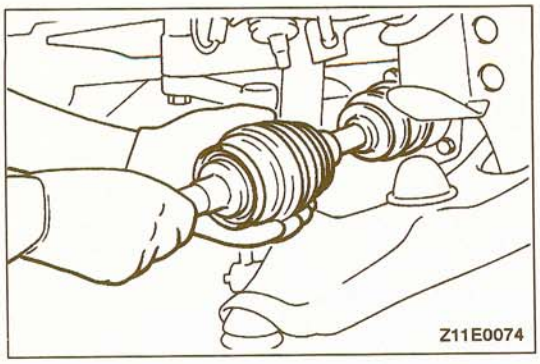


### ◀E▶ DRIVE SHAFT REMOVAL

FOR LEFT DRIVE SHAFT
Pull the drive shaft out from the differential carrier.

**Caution**
**When pulling the drive shaft out from the differential carrier, be careful that the spline part of the drive shaft does not damage the oil seal.**

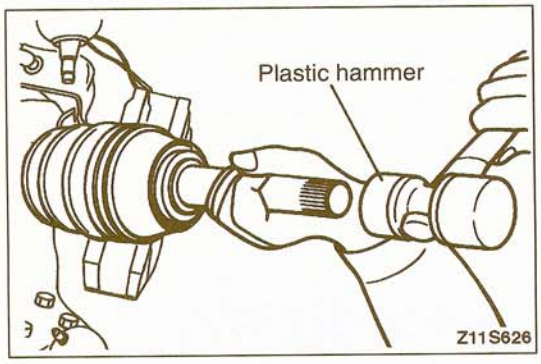


## INSTALLATION SERVICE POINT

### ▶A◀ DRIVE SHAFT INSTALLATION

FOR LEFT DRIVE SHAFT
Drive the drive shaft into the differential carrier with a plastic hammer.

**Caution**
1. **Be careful not to damage the lip of the oil seal.**
2. **The circlip attached to the B.J. side spline of the drive shaft should be replaced with a new clip.**

## INSPECTION

26100360032

- Check the operation of the ball joint and check for excessive looseness.
- Check the boot for wear or damage.
- Check the splines for wear or damage.

## DISASSEMBLY AND REASSEMBLY

26100370073

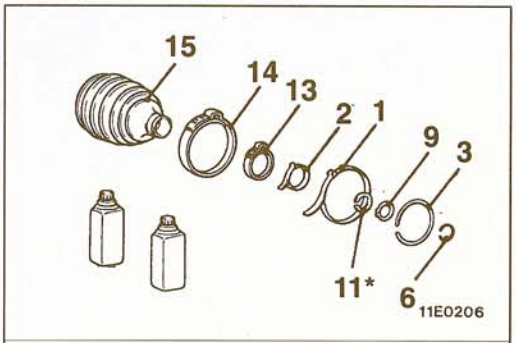


Boot repair kit (B.J.)

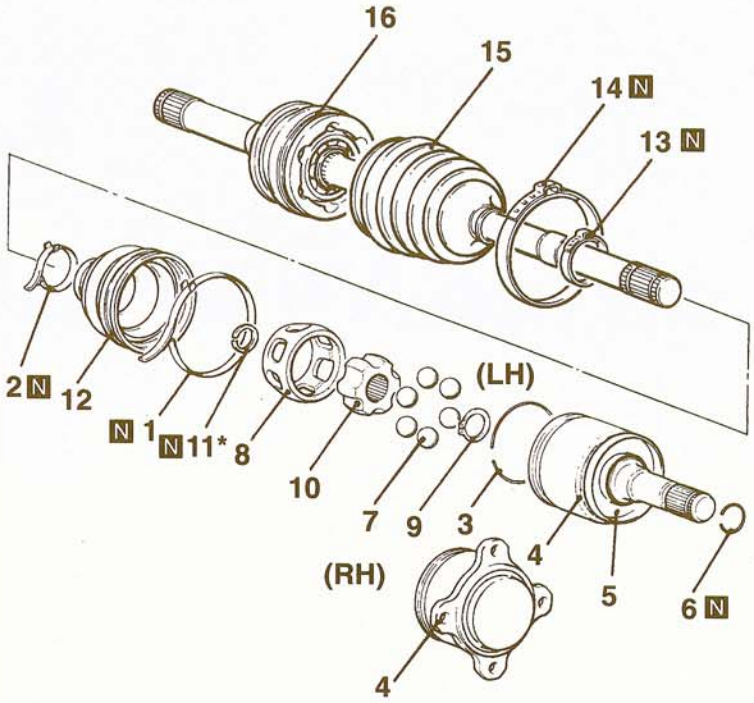


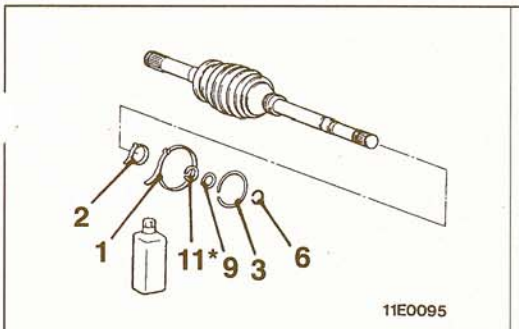


B.J. repair kit

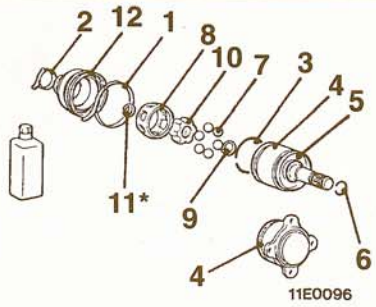


D.O.J. repair kit

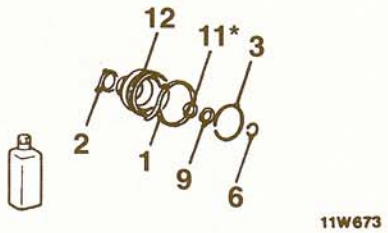


Boot repair kit (D.O.J.)

00003994

### Disassembly steps

1. D.O.J. boot band (large)
2. D.O.J. boot band (small)
3. Circlip
4. D.O.J. outer race
5. Dust cover
6. Circlip
- ◀A▶ 7. Ball
- ◀B▶ 8. D.O.J. cage
- ◀C▶ 9. Snap ring
10. D.O.J. inner race
- ◀C▶ 11. Circlip
- ◀D▶ 12. D.O.J. boot
13. B.J. boot band (small)
14. B.J. boot band (large)
15. B.J. boot
16. B.J. assembly

### Reassembly steps

16. B.J. assembly
- ▶A◀ 15. B.J. boot
- ▶A◀ 14. B.J. boot band (large)
- ▶A◀ 13. B.J. boot band (small)

2. D.O.J. boot band (small)
12. D.O.J. boot
- ▶B◀ 8. D.O.J. cago

11. Circlip
- ▶B◀ 10. D.O.J. inner race
- ▶B◀ 9. Snap ring
- ▶B◀ 7. Ball
- ▶C◀ 4. D.O.J. outer race

5. Dust cover
3. Circlip
1. D.O.J. boot band (large)
6. Circlip

NOTE
*: M/T

TSB Revision

## LUBRICATION POINTS

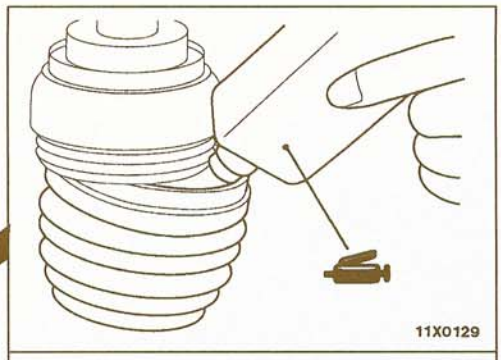


**Grease:**
**Repair kit grease 130 g (4.6 oz.)**

NOTE
The grease in the repair kit should be divided in half for use, respectively, at the joint and inside the boot.

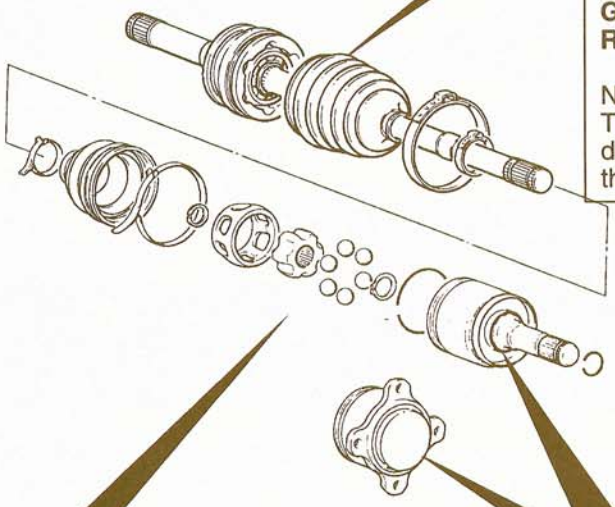


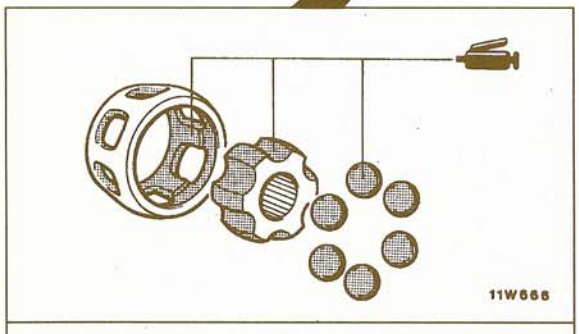


**Grease: Repair kit grease**

00003995

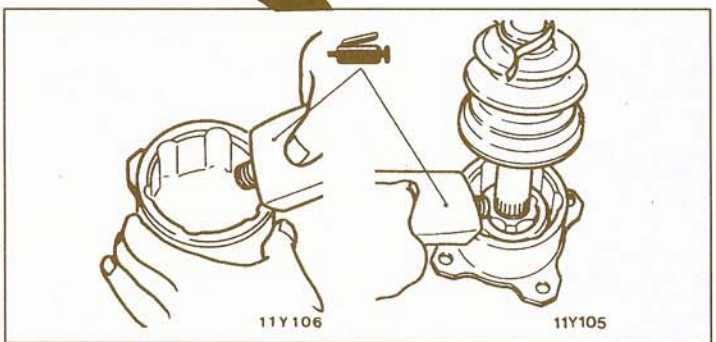


**Grease:**
**Repair kit grease 100 g (3.5 oz.)**

NOTE
The grease in the repair kit should be divided in half for use, respectively, at the joint and inside the boot.

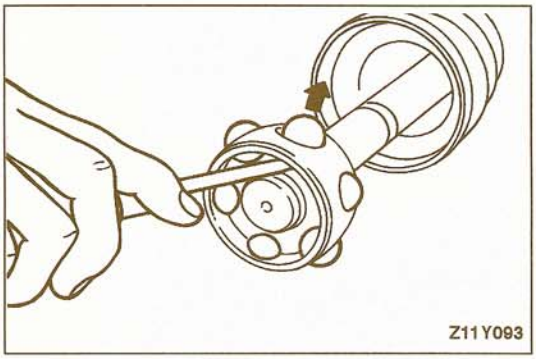


## DISASSEMBLY SERVICE POINTS

### ◀A▶ BALLS REMOVAL

Remove the balls from the D.O.J. cage.

**TSB Revision**

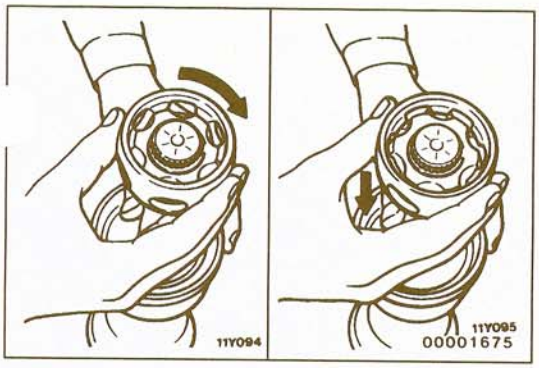


### ◀B▶ D.O.J. CAGE REMOVAL

Remove the D.O.J. cage from the D.O.J. inner race in the direction of the B.J.

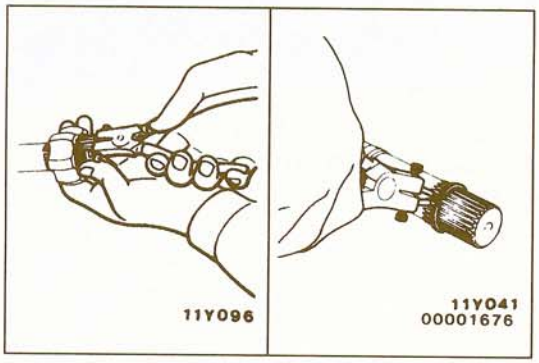


### ◀C▶ SNAP RING/CIRCLIP REMOVAL

(1) Use snap ring pliers to remove the snap ring from the drive shaft, and then withdraw the D.O.J. inner race and D.O.J. cage from the drive shaft.
(2) Use snap ring pliers to remove the circlip from the drive shaft.

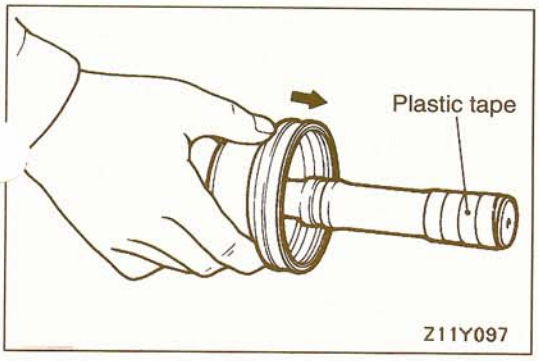


### ◀D▶ D.O.J. BOOT REMOVAL

(1) Wrap plastic tape around the spline part on the D.O.J. side of the drive shaft so that the D.O.J. boot will not be damaged when it is removed.
(2) With draw the D.O.J. boot from the drive shaft.

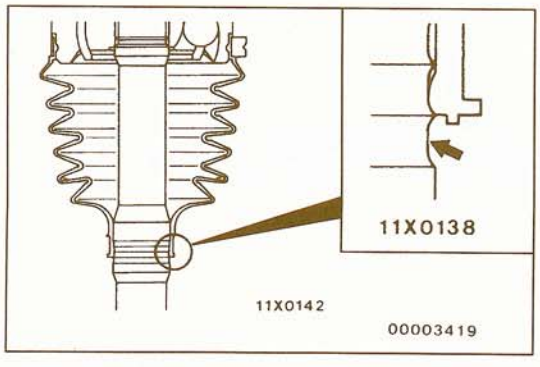


## REASSEMBLY SERVICE POINTS

### ▶A◀ B.J. BOOT/B.J. BOOT BAND (LARGE)/B.J. BOOT BAND (SMALL) INSTALLATION

(1) Wrap plastic tape around the spline part on the drive shaft, and then install the B.J. boot band (small) and B.J. boot.

(2) Install the smaller side of the B.J. boot band so that one shaft groove can be seen.

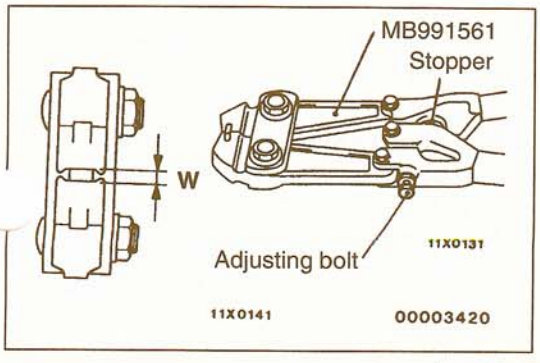


(3) Turn the adjusting bolt of the special tool to adjust the opening dimension (W) to the standard value.

**Standard value (W): 2.9 mm (.114 in.)**
**<When more than 2.9 mm (.114 in.)>**
**Screw in the adjusting bolt.**
**<When less than 2.9 mm (.114 in.)>**
**Loosen the adjusting bolt.**

NOTE
(1) The dimension (W) is adjusted by approx. 0.7 mm (.028 in.) per one turn.
(2) Do not turn the adjusting bolt more than one turn.

TSB Revision

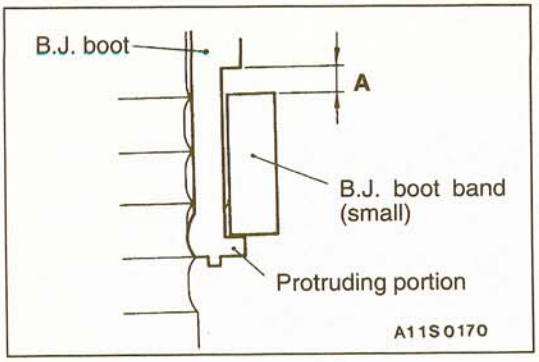


(4) Place the boot band (small) along the protruding portion, and install it so that there is some clearance (A) along the other side.

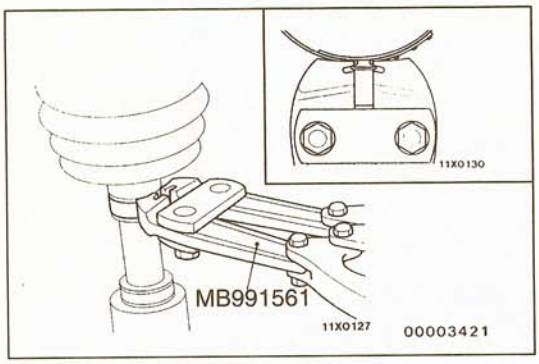


(5) Use the special tool to crimp the B.J. boot band (small.)

**Caution**
**(1) Hold the drive shaft perpendicularly, and use the special tool to crimp the B.J. boot band securely.**
**(2) Crimp the B.J. boot band until the special tool touches the stopper.**

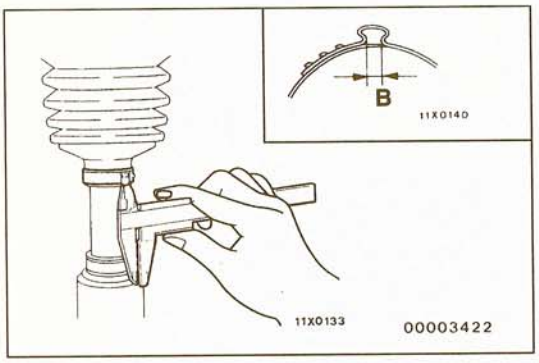


(6) Check that the crimped width (B) is within the standard value.

**Standard value (B): 2.4 – 2.8 mm (.094 – .110 in.)**

**<When more than 2.8 mm (.110 in.)>**
**Readjust the dimension (W) of step (3) to the value calculated by the following equation, and repeat step (5).**
**W = 5.5 mm (.217 in.) – B**
**Example: If (B) is 2.9 mm (.114 in.), (W) is 2.6 mm (.102 in.)**

**<When less than 2.4 mm (.094 in.)>**
**Remove the B.J. boot band, readjust the dimension (W) of step (3) to the value calculated by the following equation, and use a new B.J. boot band to repeat steps (4) to (5).**
**W = 5.5 mm (.217 in.) – B**
**Example: If (B) is 2.3 mm (.091 in.), (W) is 3.2 mm (.126 in.)**

(7) Check that the B.J. boot band is secured correctly. If the band is secured incorrectly, repeat steps (4) to (6) to replace it.

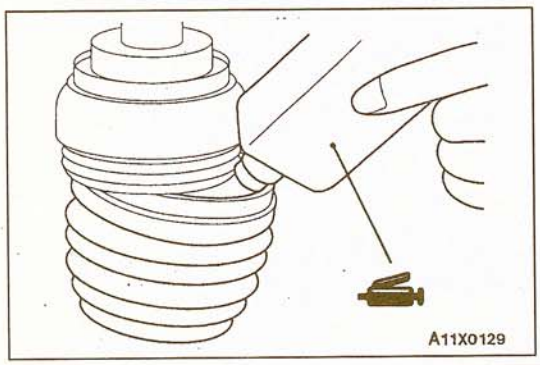


(8) Fill the inside of the B.J. boot with specified grease.

**Specified grease: Repair kit grease 130 g (4.6 oz.)**

**Caution**
**The drive shaft joint uses special grease. Do not mix old and new grease or different types of grease.**

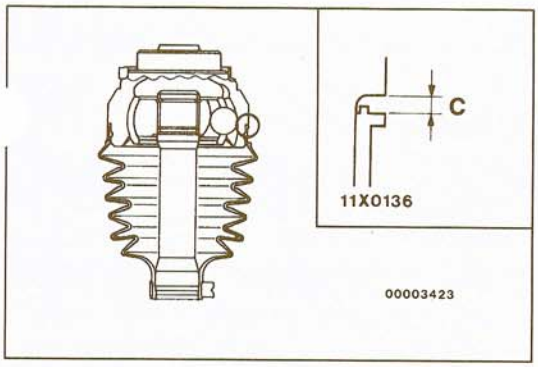


(9) Install the B.J. boot to adjust the clearance (C) between the B.J. boot end and the stepped phase of the B.J. housing is within the standard value.

**Standard value (C): 0.05 – 1.55 mm (.0020 – .061 in.)**

(10) Adjust the opening dimension (W) to the standard value as mentioned at the step (3).

**Standard value (W): 3.2 mm (.126 in.)**

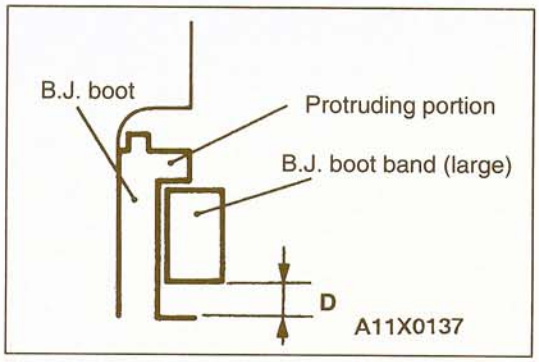


(11) Place the B.J. boot band (large) along the protruding portion, and install it so that there is some clearance (D) along the other side.

(12) Use the special tool to crimp the B.J. boot band (large) in the same way as the step (5).

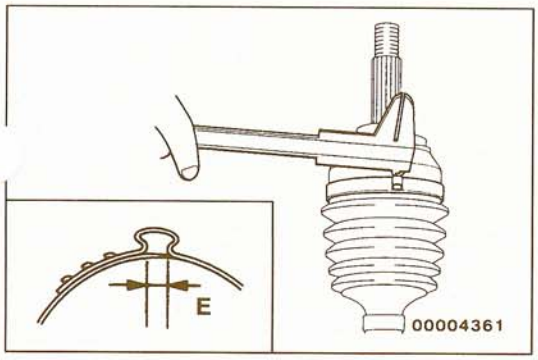


(13) Check that the crimped width (E) is within the standard value.

**Standard value (E): 2.4 – 2.8 mm (.094 – .110 in.)**

**<When more than 2.8 mm (.110 in.)>**
**Readjust the dimension (W) of step (10) to the value calculated by the following equation, and repeat step (12).**
**W = 5.8 mm (.228 in.) – E**
**Example: If (E) is 2.9 mm (.114 in.), (W) is 2.9 mm (.114 in.).**

**<When less than 2.4 mm (.094 in.)>**
**Remove the B.J. boot band, readjust the dimension (W) of step (10) to the value calculated by the following equation, and use a new B.J. boot band to repeat steps (11) to (12).**
**W = 5.8 mm (.228 in.) – E**
**Example: If (E) is 2.3 mm (.091 in.), (W) is 3.5 mm (.138 in.)**

(14) Check that the boot band is secured correctly. If the band is secured incorrectly, repeat steps (11) to (13) to replace it.

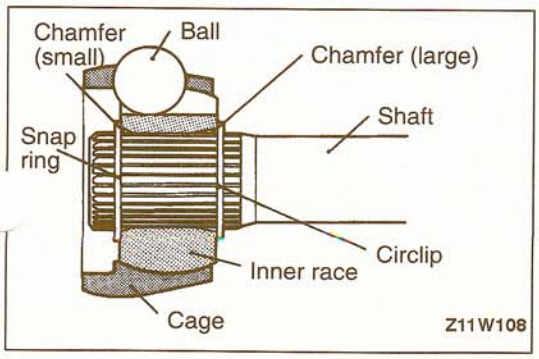


### ▶B◀ D.O.J. CAGE/D.O.J. INNER RACE/SNAP RING/BALLS INSTALLATION

Install the cage, balls and inner race to the drive shaft, and fit the snap ring securely into the groove in the drive shaft.

**Caution**
**For vehicles with M/T, the inner race should be installed so that the large chamfer on the spline section is on the drive shaft side.**

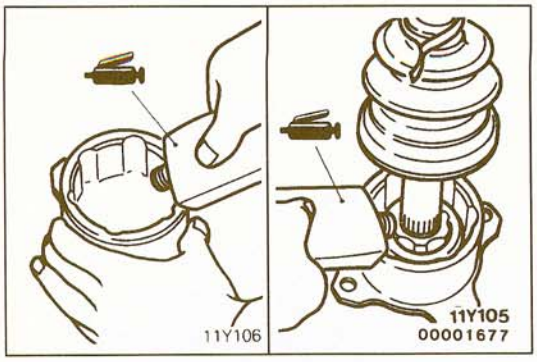


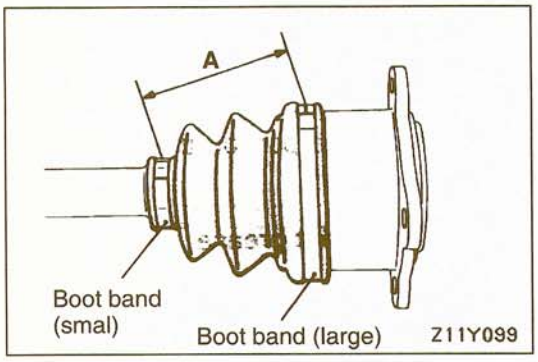


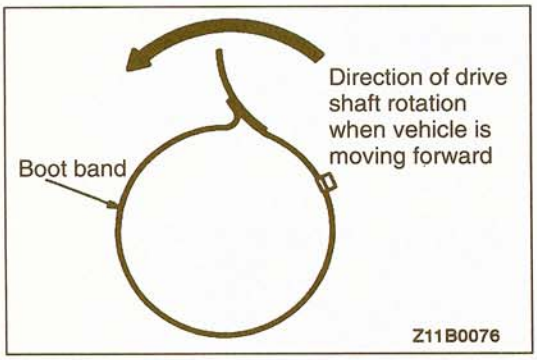


### ▶C◀ D.O.J. OUTER RACE INSTALLATION

(1) Fill the inside of the D.O.J. outer race and D.O.J. boot with specified grease.

**Specified grease: Repair kit grease 100 g (3.5 oz.)**

**Caution**
**The drive shaft joint uses special grease. Do not mix old and new grease or different types of grease.**

(2) Install the circlip onto the D.O.J. outer race. Place the D.O.J. boot over the D.O.J. outer race, and then use a boot band (small) to secure the boot.

**Caution**
**Do not secure the boot band (large).**

(3) Secure the drive shaft, and then move the D.O.J. outer race until it is at the position where the D.O.J. boot assembly dimension is at the standard value.

**Standard value (A): 77–83 mm (3.03–3.27 in.)**

(4) Remove part of the D.O.J. boot from the D.O.J. outer race to release the air within the boot.

(5) Secure the boot band (large) on the D.O.J. boot.

**Caution**
**Check that the installation directions of the boot bands are correct.**

## INSPECTION

26100380052

- Check the drive shaft for bending or wear.
- Check the B.J. for entry of water, foreign materials or rust.
- Check the D.O.J. cage, D.O.J. inner race and balls for rust, wear or damage.
- Check the circlip for damage or deformation.
- Check the D.O.J. outer race for wear or damage.

# INNER SHAFT

26100400017

## REMOVAL AND INSTALLATION

**Pre-removal and Post-installation Operation**
- Under Cover Removal and Installation

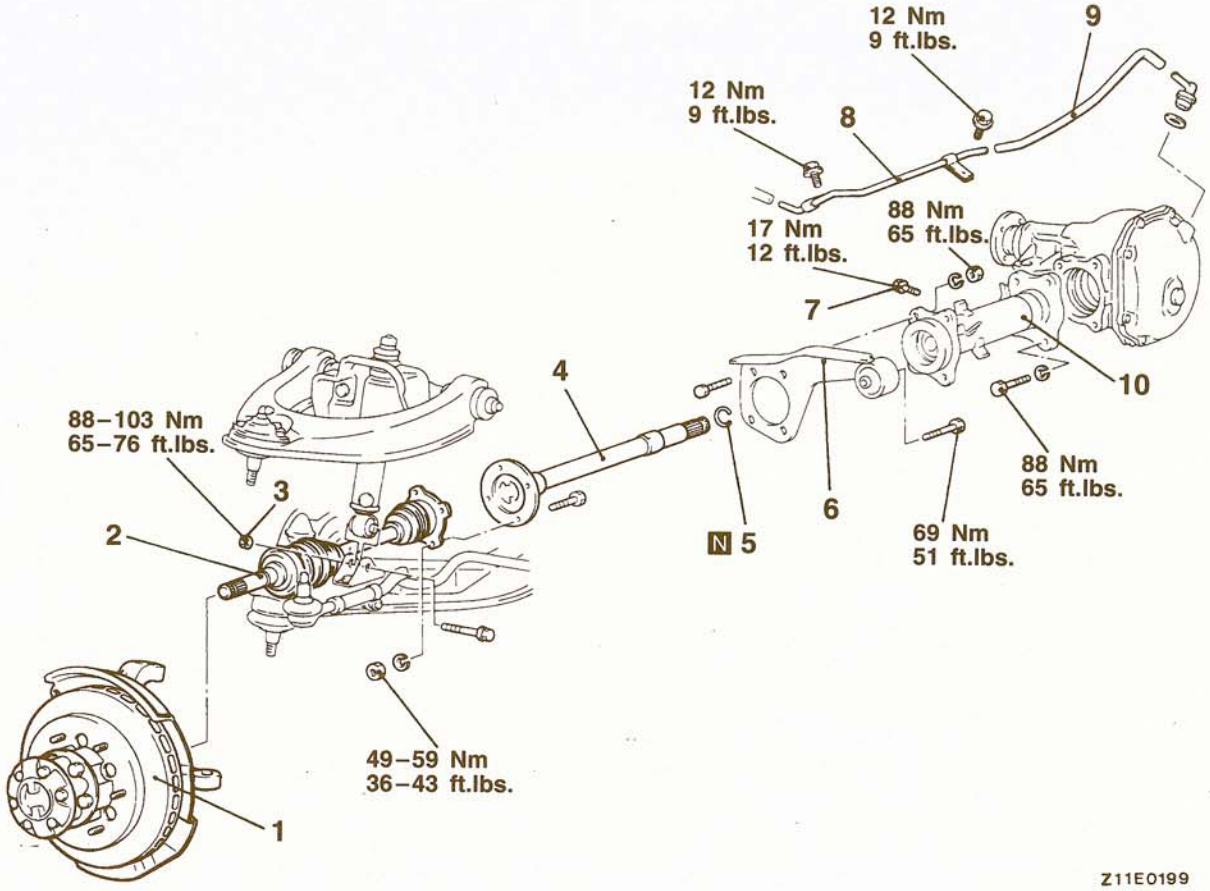


**Removal steps**

1. Front hub and knuckle assembly (Refer to P.26-17.)
2. Drive shaft assembly (R.H.) (Refer to P.26-20.)
3. Shock absorber lower mounting bolt and nut

◀A▶ ▶A◀ 4. Inner shaft

5. Circlip
6. Differential mounting bracket (R.H.)
7. Actuator mounting bolt
8. Breather pipe
9. Breather hose
10. Housing tube

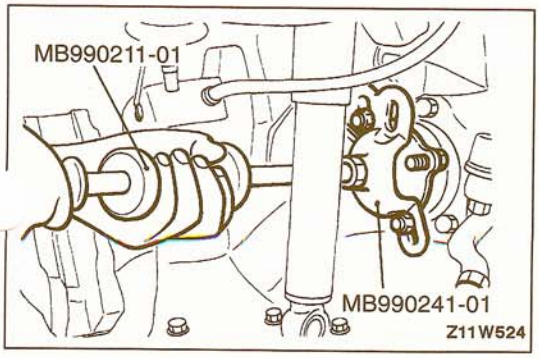


## REMOVAL SERVICE POINT

### ◀A▶ INNER SHAFT REMOVAL

Attach the special tools to the flange of the shaft, and pull the inner shaft out from the front differential carrier.

**Caution**
**When pulling the inner shaft out from the front differential carrier, be careful that the spline part of the inner shaft does not damage the oil seal.**

**TSB Revision**

## INSTALLATION SERVICE POINT

### ▶A◀ INNER SHAFT INSTALLATION

Drive the inner shaft into the front differential carrier by usir the special tools (MB990241-01 and MB990211-01).

**Caution**
**Be careful not to damage the lip of the dust seal and oil seal.**

## INSPECTION

26100410010

- Check the inner shaft for bend.
- Check the bearing for wear or discoloration.
- Check the housing tube for cracks.
- Check the dust seal for cracks or damage.

## DISASSEMBLY AND REASSEMBLY

26100420013

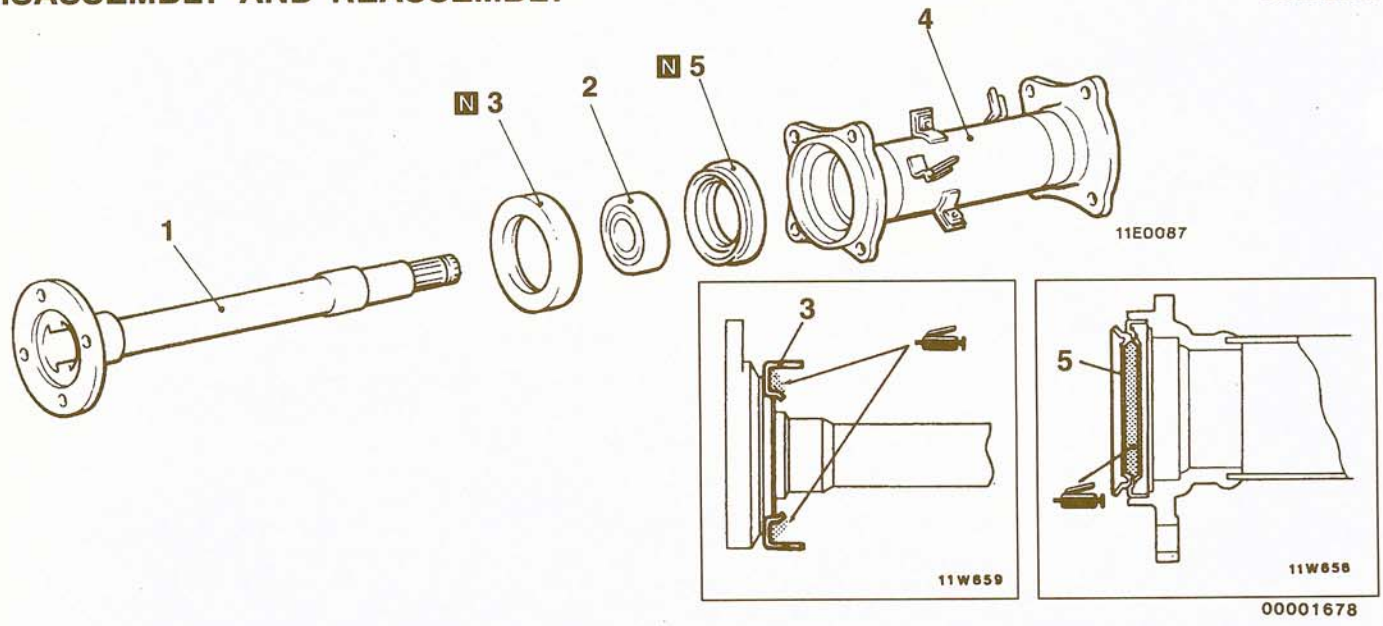


**Disassembly steps**

◀A▶ ▶C◀ 1. Inner shaft
2. Bearing

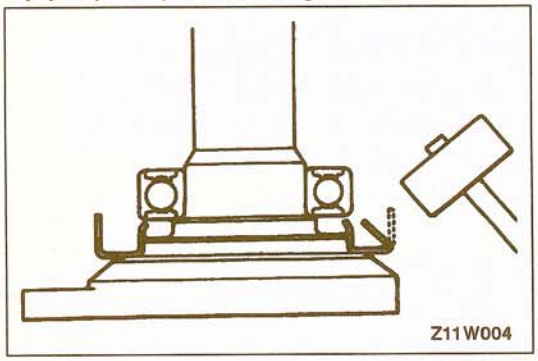


▶B◀ 3. Dust cover
4. Housing tube
▶A◀ 5. Dust seal

## DISASSEMBLY SERVICE POINT

### ◀A▶ BEARING REMOVAL

(1) Bend the outside periphery of dust cover inward with a hammer.

TSB Revision

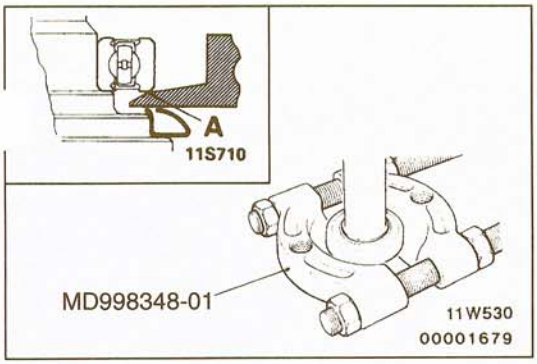


(2) After the special tool has been installed as shown, tighten the nut of the special tool until section "A" of the special tool touches the bearing outer race.

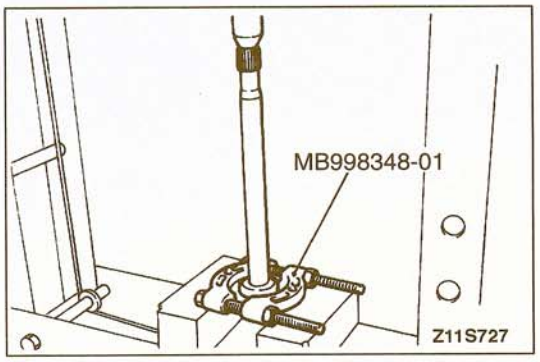


(3) Press out the inner shaft from the bearing.

**Caution**
**Do not allow the inner shaft to drop.**

## REASSEMBLY SERVICE POINTS

### ▶A◀ DUST SEAL INSTALLATION

Use the special tools to press-fit the new dust seal into the housing tube until it is flush with the housing tube end face.

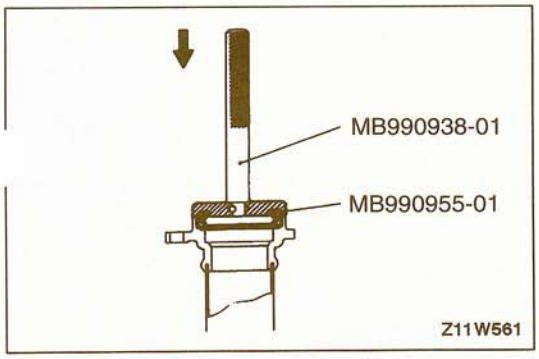


### ▶B◀ DUST COVER INSTALLATION

Use a steel pipe to press-fit a new dust cover onto the inner shaft.

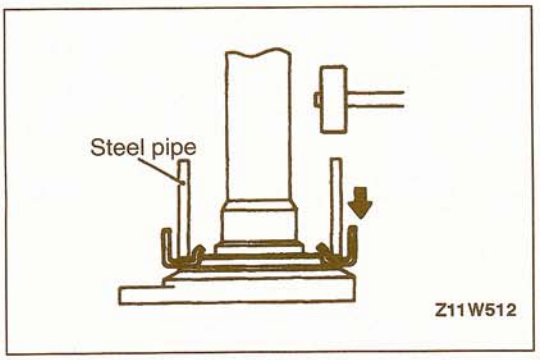


| Steel pipe | mm (in.) |
|---|---|
| Overall length | 50 (1.7) |
| Outer diameter | 75 (3.0) |
| Wall thickness | 4 (.2) |

### ▶C◀ BEARING INSTALLATION

Use the special tool to press-fit the bearing onto the inner shaft.

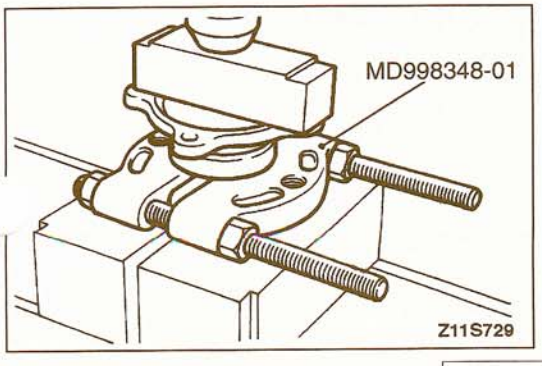

# SOLENOID VALVE AND VACUUM HOSE

26200450015

## REMOVAL AND INSTALLATION

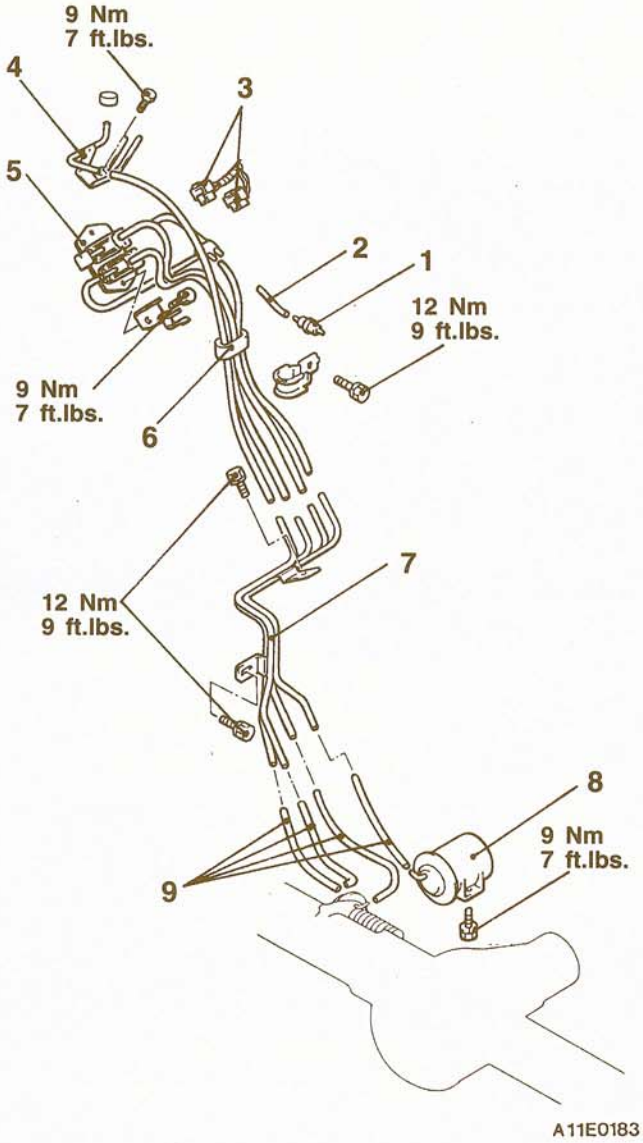


**Removal steps**

1. Check valve
2. Vacuum hose
3. Solenoid valve connector
4. Vacuum pipe

▶B◀ 5. Solenoid valve assembly

▶B◀ 6. Vacuum hose
7. Vacuum pipe assembly
8. Vacuum tank

▶A◀ 9. Vacuum hose

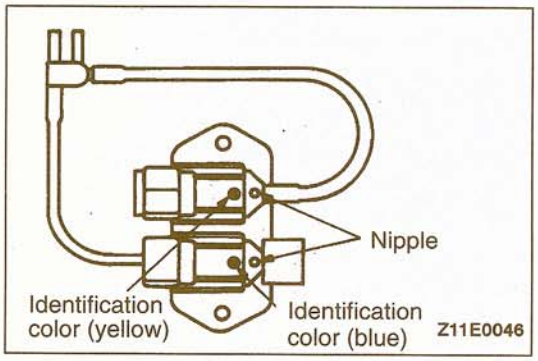


## INSTALLATION SERVICE POINTS

### ▶A◀ VACUUM HOSE INSTALLATION

Install the vacuum hoses so that the identification colors match those of the pipe assembly and the actuator. Furthermore, there are no identification colors on the vacuum hose at the vacuum tank connection.

### ▶B◀ VACUUM HOSE/SOLENOID VALVE ASSEMBLY INSTALLATION

Install the vacuum hose and solenoid valve assembly so that the colors of the identification marks are matched.

TSB Revision

# DIFFERENTIAL CARRIER AND FREE-WHEELING CLUTCH

26200180013

## REMOVAL AND INSTALLATION

**Pre-removal and Post-installation Operations**
- Under Cover Removal and Installation
- Gear Oil Draining and Supplying (Refer to P.26-9.)

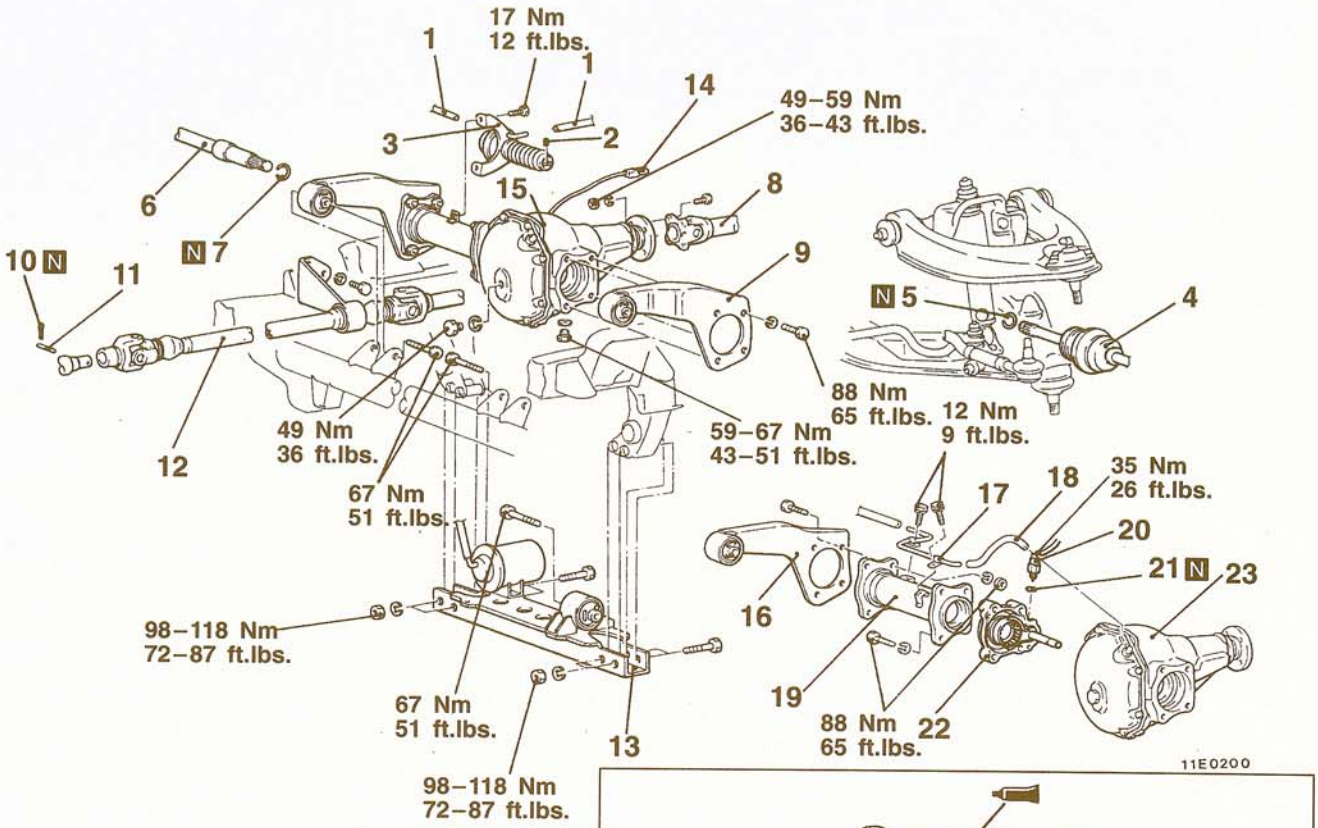


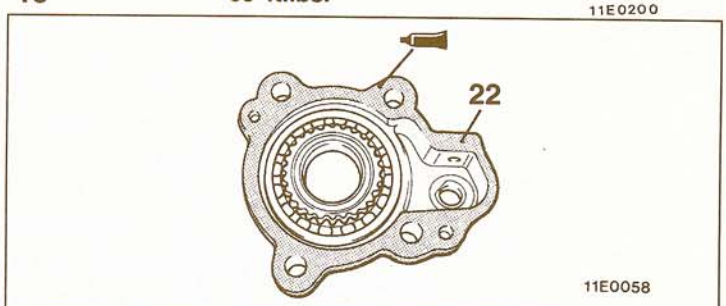


**Sealant: 3M ATD Part No. 8663, 8661 or equivalent**

00001681

**Removal steps**

▶C◀ 1. Vacuum hose
2. Pin
3. Actuator assembly
4. Drive shaft (Refer to P.26-20.)
5. Circlip
6. Inner shaft (Refer to P.26-29.)
7. Circlip
◀A▶ ▶B◀ 8. Front propeller shaft connection
9. Differential mounting bracket (L.H.)
10. Cotter pin <M/T>
11. Share pin <M/T>
12. Front shaft assembly <M/T>
13. Front suspension crossmember
14. Free-wheeling engage switch connector
15. Front differential carrier assembly, housing tube and differential mounting bracket (R.H.)
16. Differential mounting bracket (R.H.)
17. Breather pipe
18. Breather hose
19. Housing tube
20. Free-wheeling engage switch
21. Gasket
▶A◀ 22. Free-wheeling clutch assembly
23. Front differential carrier assembly

**TSB Revision**

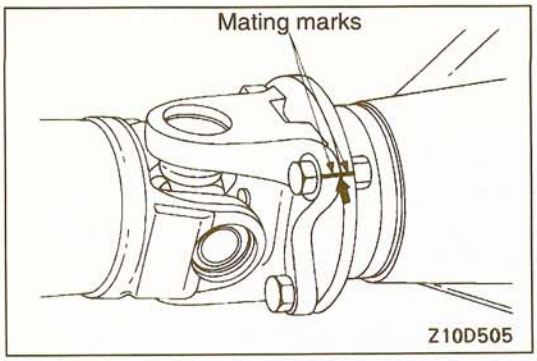


## REMOVAL SERVICE POINT

### ◀A▶ FRONT PROPELLER SHAFT REMOVAL

Make mating marks on the flange yoke of the rear propelle shaft and on the companion flange of the differential case.

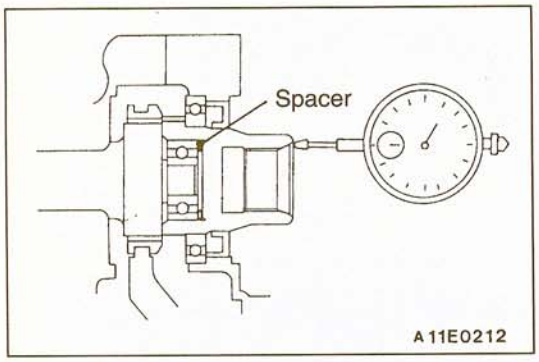


## INSTALLATION SERVICE POINTS

### ▶A◀ FREE-WHEELING CLUTCH ASSEMBLY INSTALLATION

After installing the free-wheeling clutch assembly, select a spacer so that the clutch gear play (bearing looseness) is within the standard value.

**Standard value: 0.05–0.30 mm (.0020–.0120 in.)**

### ▶B◀ FRONT PROPELLER SHAFT INSTALLATION

Install the front propeller shaft so that the mating marks on the flange yoke and differential carrier companion flange are aligned.

### ▶C◀ VACUUM HOSE INSTALLATION

Install the vacuum hoses so that the identification colors match those of the actuator assembly nipples.

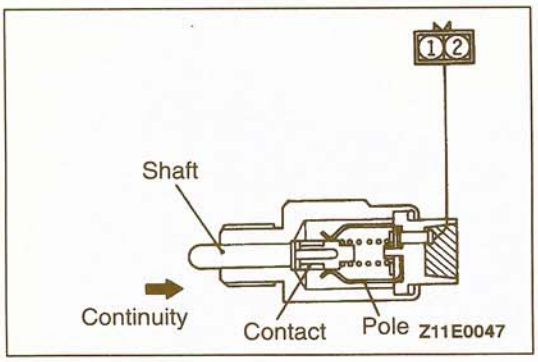


## INSPECTION

26200190016

### FREE-WHEEL ENGAGE SWITCH

The switch is normal if there is continuity when the shaft is pushed in and no continuity when the shaft is released.

# FREE-WHEELING CLUTCH

26200290013

## DISASSEMBLY AND REASSEMBLY

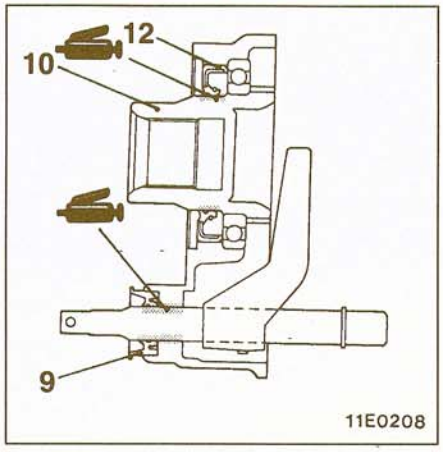


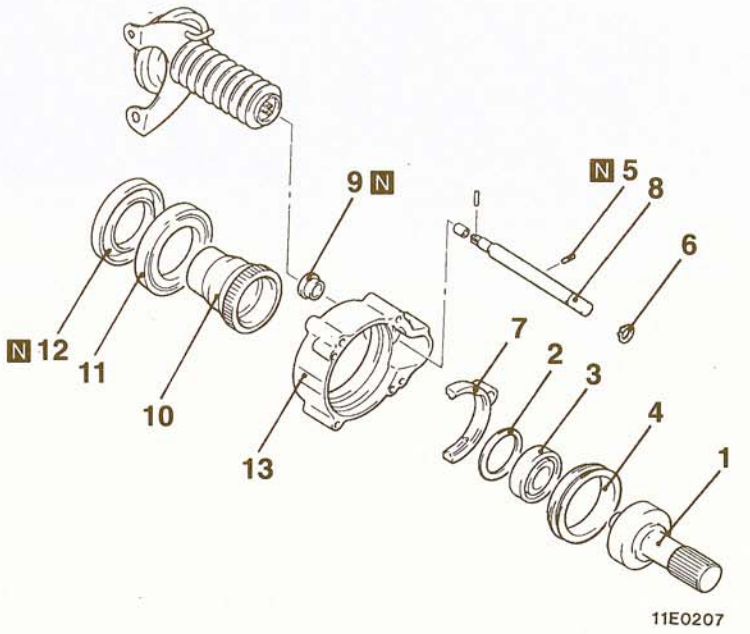


00003993

**Removal steps**

- ◀A▶ 1. Main shaft
- ▶F◀ 2. Spacer
- ◀A▶ ▶E◀ 3. Bearing
- 4. Clutch sleeve
- ▶D◀ 5. Spring pin
- 6. Snap ring
- 7. Shift fork
- 8. Shift rod
- ▶C◀ 9. Oil seal
- ◀B▶ ▶B◀ 10. Clutch gear
- ◀B▶ ▶B◀ 11. Bearing
- ▶A◀ 12. Oil seal
- 13. Clutch housing

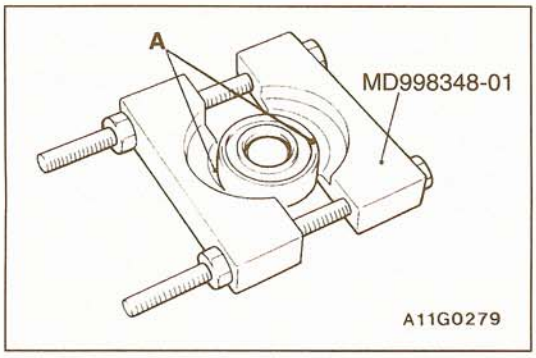


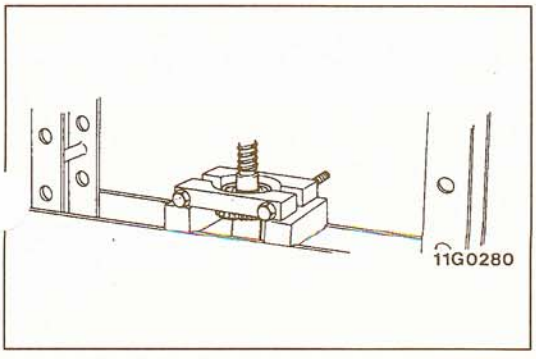


## DISASSEMBLY SERVICE POINTS

### ◀A▶ MAIN SHAFT/BEARING REMOVAL

(1) After assembling the special tool as shown in the illustration, tighten the nut of the special tool so that A section of the special tool contacts the bearing outer race.

(2) Use a press and pull the bearing off the main shaft.

TSB Revision

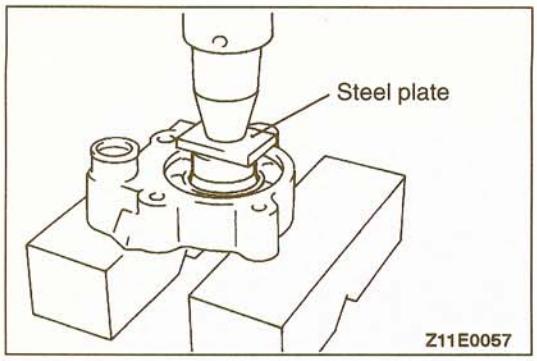


### ◀B▶ CLUTCH GEAR/BEARING REMOVAL

(1) Use a press and a steel plate to remove the clutch gear and bearing together.

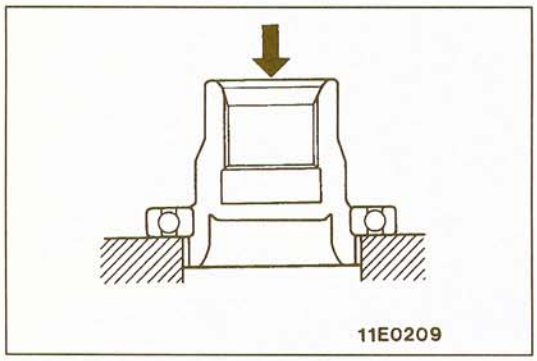


(2) Use a press to hold the supports against the bearing inner race, and then separate the clutch gear and bearing.

## REASSEMBLY SERVICE POINTS

### ▶A◀ OIL SEAL INSTALLATION

Use the special tool to tap the oil seal until it is flush with the clutch housing.

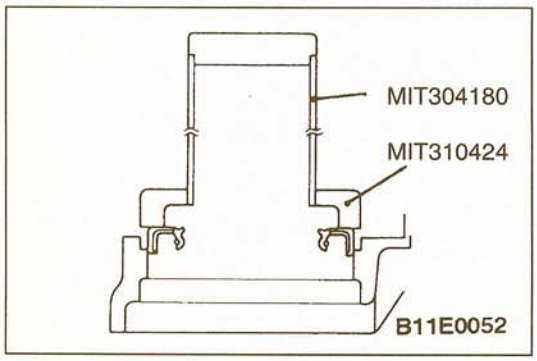


### ▶B◀ BEARING/CLUTCH GEAR INSTALLATION

(1) Use the special tool to press-fit the bearing onto the shoulder of the clutch gear.

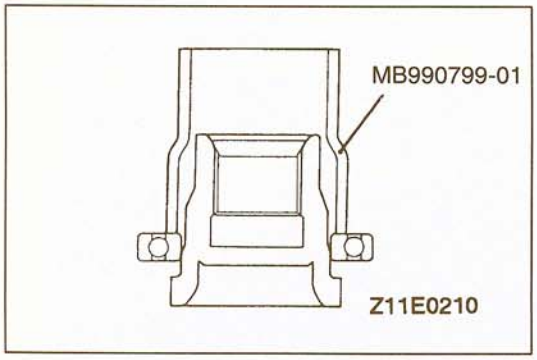


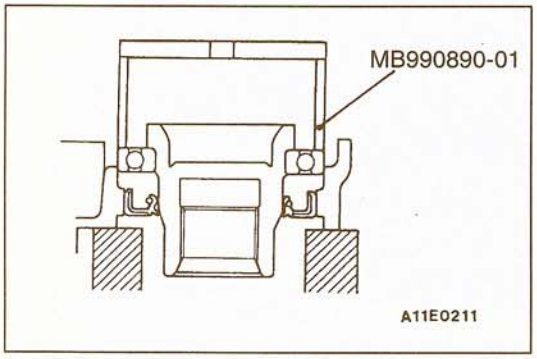


(2) Use the special tool to press-fit the bearing into the side of the clutch housing.

**Caution**
**Place the special tool against the outer race of the bearing.**

TSB Revision

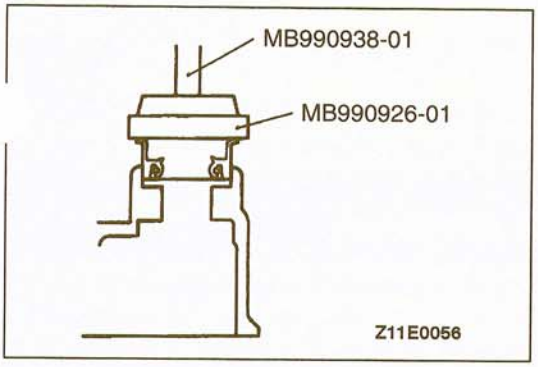


### ▶C◀ OIL SEAL INSTALLATION

Use the special tool to tap the oil seal.

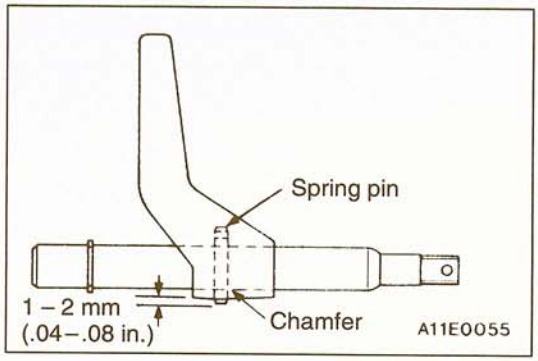


### ▶D◀ SPRING PIN INSTALLATION

Tap the spring pin from the chamfered side of the shift rod until the projection length is at the length shown in the illustration.

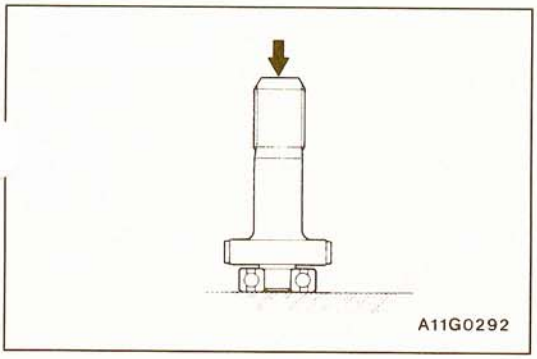


### ▶E◀ BEARING INSTALLATION

Press-fit the bearing as far as the shoulder of the main shaft.

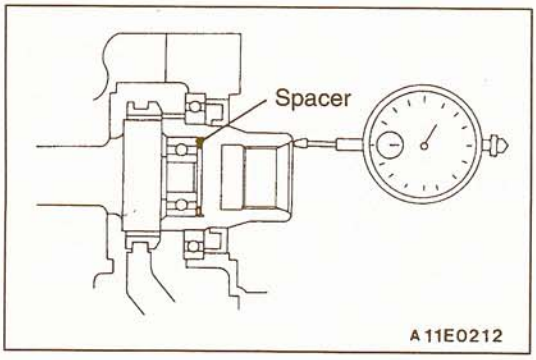


### ▶F◀ SPACER INSTALLATION

(1) After installing the free-wheeling clutch assembly, select a spacer so that the clutch gear axial play (bearing looseness) is within the standard value.

**Standard value: 0.05 – 0.30 mm (.0020 – .0120 in.)**

(2) If it is outside the standard value, disassemble and select the appropriate again.

NOTE
The thickness of the spacer is different 0.25 mm (.10 in.) each.

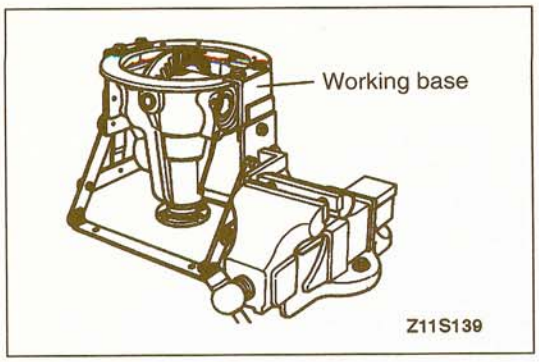


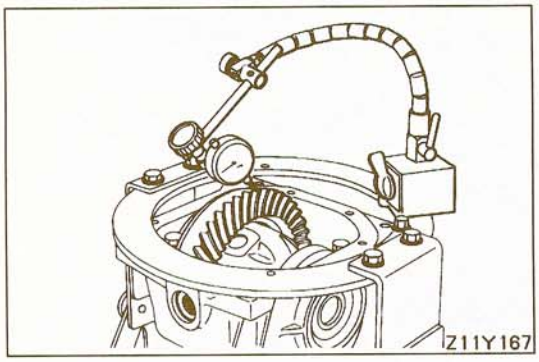


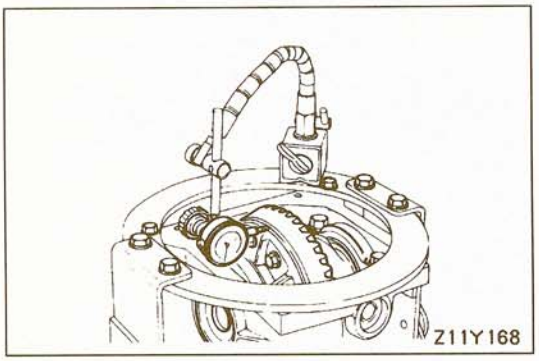


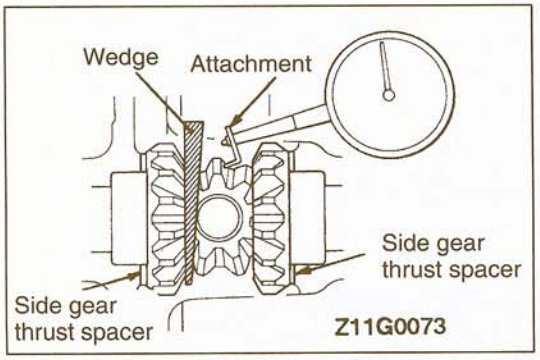


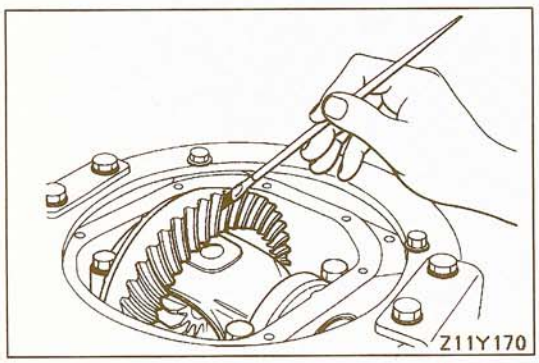


# DIFFERENTIAL CARRIER

26200430019

## INSPECTION BEFORE DISASSEMBLY

Remove the cover and gasket. Hold the working base in a vise, and install the differential carrier assembly to it.

### FINAL DRIVE GEAR BACKLASH

Check the final drive gear backlash by the following procedure.

(1) With the drive pinion locked in place, use a dial indicator to measure the final drive gear backlash on the drive gear.

NOTE
Measure at four points or more on the circumference of the drive gear.

**Standard value: 0.11–0.16 mm (.0043–.0063 in.)**

(2) If the backlash is outside the standard value, adjust it by using the side bearing adjustment spacers.

### DRIVE GEAR RUNOUT

Check the drive gear runout by the following procedure.

(1) Measure the drive gear runout at the shoulder on the reverse side of the drive gear.

**Limit: 0.05 mm (.0020 in.)**

(2) If the runout exceeds the limit, check for incorrect tightening of the drive gear and differential case.

### DIFFERENTIAL GEAR BACKLASH

Check the differential gear backlash by the following procedure.

(1) While locking the side gear with a wedge, use a dial indicator to measure the differential gear backlash on the pinion gear.

NOTE
The measurement should be made for both pinion gears individually.

**Standard value: 0.076 mm (.0030 in.) or less**

**Limit: 0.2 mm (.0079 in.)**

(2) If the backlash exceeds the limit, adjust by using the side gear thrust spacers.

### FINAL DRIVE GEAR TOOTH CONTACT

Check the final drive gear tooth contact by the following procedure.

(1) Apply a thin; uniform coat of machine blue to both surfaces of the drive gear teeth.

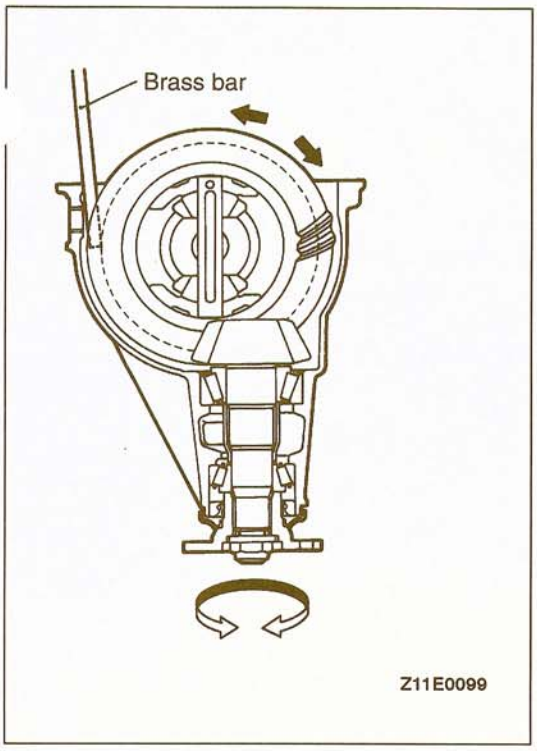


(2) Insert a brass rod between the differential carrier and the differential case, and then rotate the companion flange by hand (once in the forward direction, and then once in the reverse direction) while applying a load to the drive gear, so that the rotation torque [2.5–3.0 Nm (28–33 in.lbs.)] is applied to the drive pinion.

**Caution**
**If the drive gear is rotated too much, the tooth contact pattern will become unclear and difficult to check.**

(3) Check the tooth contact of the drive gear and drive pinion.

**Standard toot contact pattern**

1 Narrow toot side
2 Drive-side tooth surface (the side applying power during forward movement)
3 Wide tooth side
4 Coast-side tooth surface (the side applying power during reverse movement)

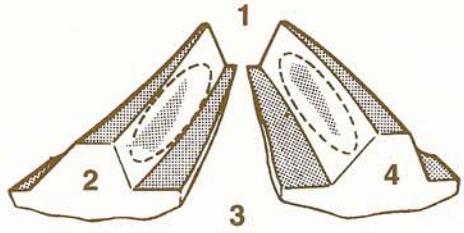


| Problem | Solution |
|---|---|
| **Tooth contact pattern resulting from excessive pinion height** | |
| 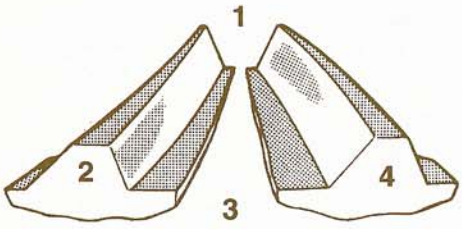  | 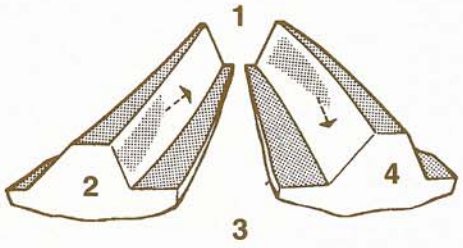  |
| The drive pinion is positioned too far from the center of the drive gear. | Increase the thickness of the pinion height adjusting shim, and position the drive pinion closer to the center of the drive gear.<br>Also, for backlash adjustment, position the drive gear farther from the drive pinion. |
| **Tooth contact pattern resulting from insufficient pinion height** | |
| 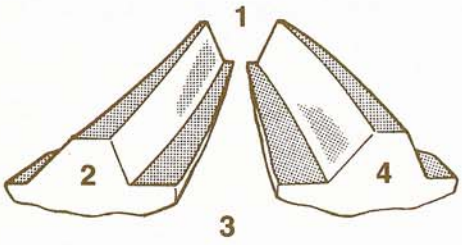  | 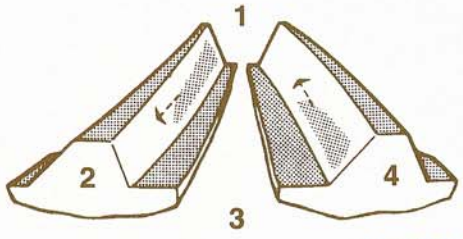  A11S642 |
| The drive pinion is positioned too far from the center of the drive gear. | Decrease the thickness of the pinion height adjusting shim, and position the drive pinion farther from the center of the drive gear.<br>Also, for backlash adjustment, position the drive gear closer to the drive pinion. |

NOTE
Checking the tooth contact pattern is the way to confirm that the adjustments of the pinion height and backlash have been done properly. Continue to adjust the pinion height and backlash until the tooth contact pattern resembles the standard pattern.

If the correct tooth contact pattern cannot be obtained even after adjustments, the drive gear an the drive pinion must be worn beyond the allowable limit. Replace the gear set.

**TSB Revision**

## DISASSEMBLY

26200230015

**Inspection before Disassembly**
- FInal Drive Gear Backlash (Refer to P.26-38.)
- Drive Gear Runout (Refer to P.26-38.)
- Differential Gear Backlash (Refer to P.26-38.)
- Final Drive Gear Tooth Contact (Refer to P.26-38.)

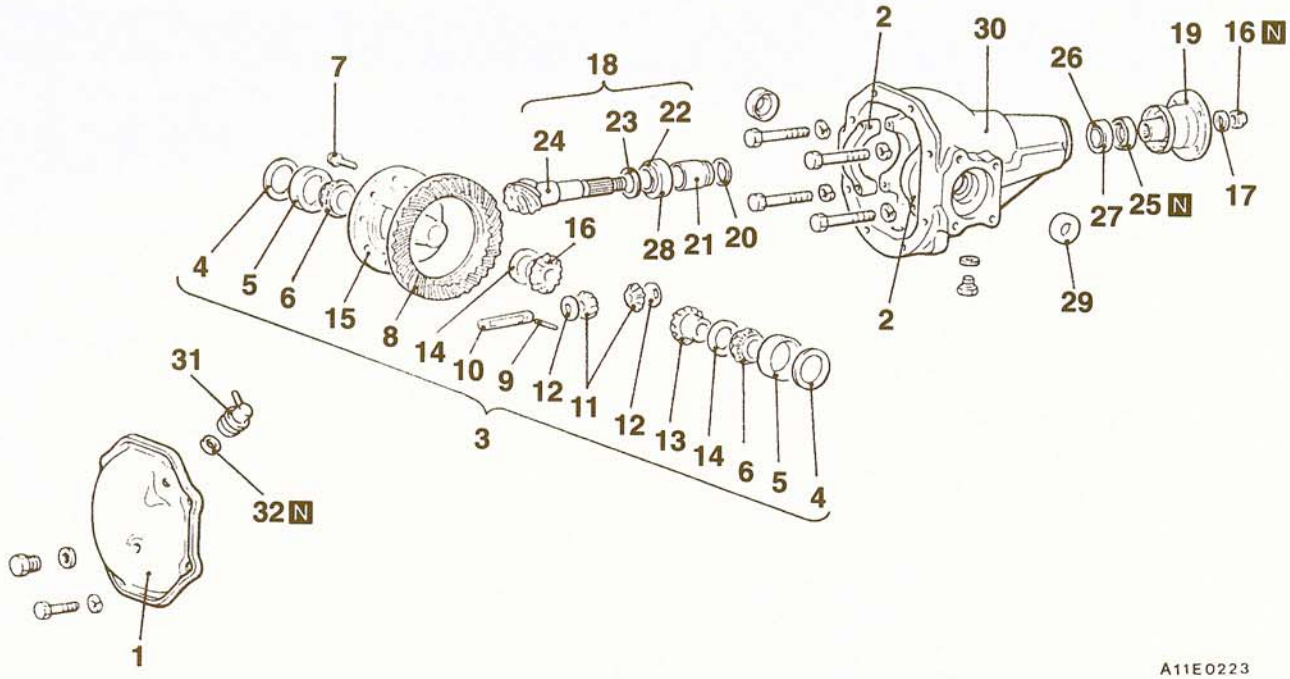


A11E0223

**Disassembly steps**

1. Cover
2. Bearing cap
◀A▶ 3. Differential case assembly
4. Side bearing adjusting spacer
5. Side bearing outer race
◀B▶ 6. Side bearing inner race
7. Bolt (10)
◀C▶ 8. Drive gear
◀D▶ 9. Lock pin
10. Pinion shaft
11. Pinion gear
12. Pinion washer
13. Side gear
14. Side gear thrust spacer
15. Differential case
◀E▶ 16. Companion flange self-locking nut
17. Washer
◀F▶ 18. Drive pinion assembly
19. Companion flange
20. Drive pinion rear shim (for preload adjustment)
21. Drive pinion spacer
◀G▶ 22. Drive pinion front bearing inner race
23. Drive pinion front shim (for pinion height adjustment)
24. Drive pinion
25. Oil seal
26. Drive pinion rear bearing inner race
◀H▶ 27. Drive pinion rear bearing outer race
◀H▶ 28. Drive pinion front bearing outer race
29. Oil seal
30. Gear carrier
31. Vent plug
32. Packing

TSB Revision

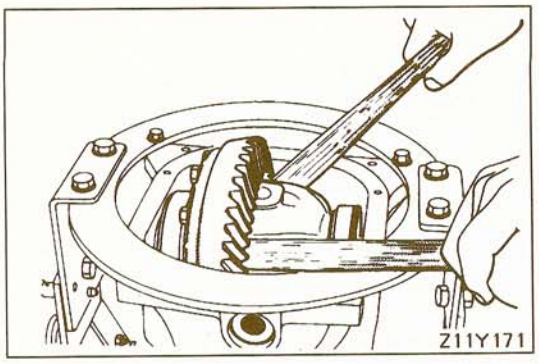


## DISASSEMBLY SERVICE POINTS

### ◀A▶ DIFFERENTIAL CASE ASSEMBLY REMOVAL

Use a hammer handle to take out the differential case assembly.

**Caution**
**When taking out the differential case assembly, be careful not to drop and damage the side bearing outer races.**

NOTE
Keep the right and left side bearings and side bearing adjusting spacers separate in order to be able to distinguish them for reassembly.

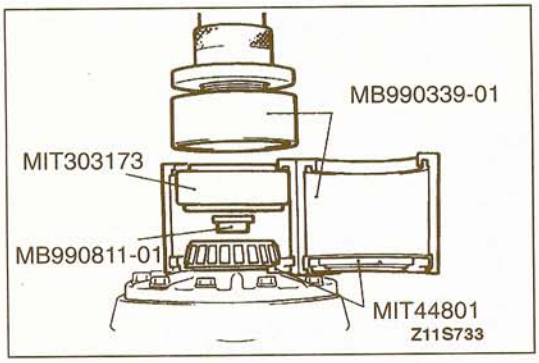


### ◀B▶ SIDE BEARING INNER RACE REMOVAL

Use the special tools to pull out the side bearing inner races.

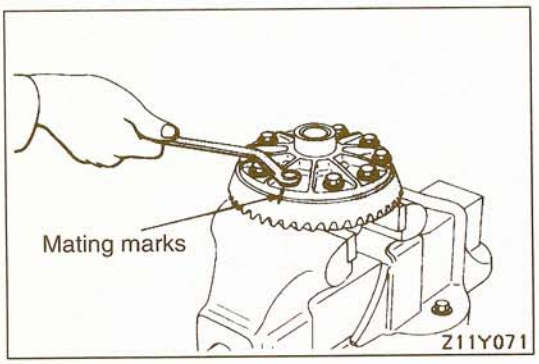


### ◀C▶ DRIVE GEAR REMOVAL

(1) Make mating marks on the differential case and drive gear.
(2) Loosen the drive gear mounting bolts in diagonal sequence to remove the drive gear.

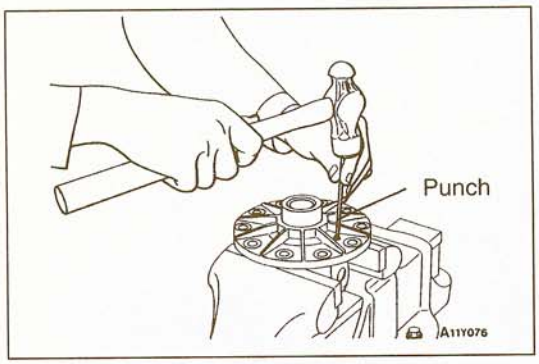


### ◀D▶ LOCK PIN REMOVAL

Drive out the lock pin with a punch.

NOTE
The removed side gears and the left and right side gear thrust spacers should be retained for reassembly.

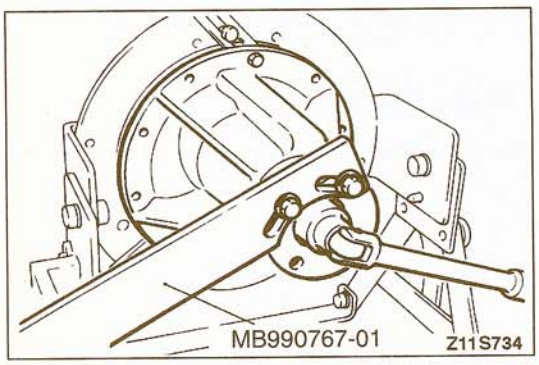


### ◀E▶ COMPANION FLANGE SELF-LOCKING NUT REMOVAL

Use the special tool to hold the companion flange, and then remove the companion flange self-locking nut.

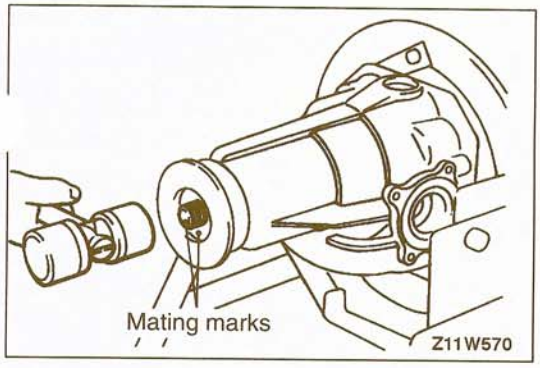


### ◀F▶ DRIVE PINION ASSEMBLY REMOVAL

(1) Make mating marks on the drive pinion and companion flange.

**Caution**
**The mating mark made on the companion flange must not be on the coupling surface of the flange yoke and the front propeller shaft.**

(2) Drive out the drive pinion together with the drive pinion spacer and the drive pinion shims.

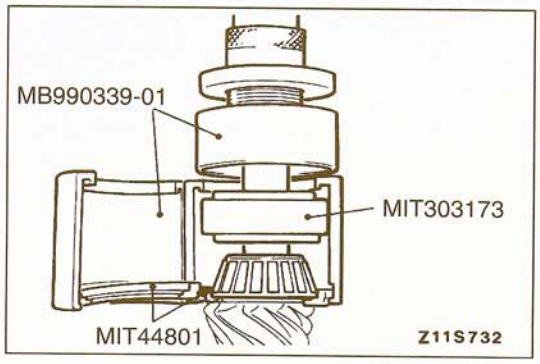


### ◀G▶ DRIVE PINION FRONT BEARING INNER RACE REMOVAL

Use the special tools to pull out the front bearing inner race.

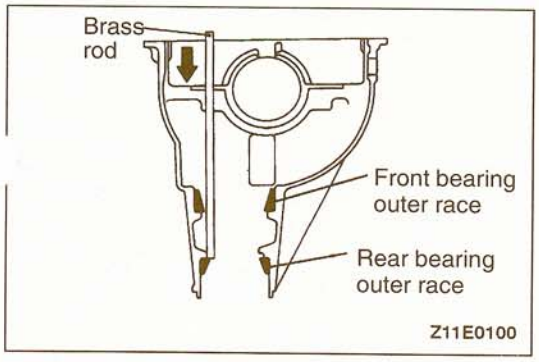


### ◀H▶ DRIVE PINION REAR BEARING OUTER RACE/ DRIVE PINION FRONT BEARING OUTER RACE REMOVAL

(1) Use the brass rod to drive out the drive pinion rear bearing outer race from the gear carrier.
(2) Drive out the front bearing outer race in the same manner.

## INSPECTION

26200240018

- Check the companion flange for wear or damage.
- Check the oil seal for wear or deterioration.
- Check the bearings for wear or discoloration.
- Check the gear carrier for cracks.
- Check the drive pinion and drive gear for wear or cracks.
- Check the side gears, pinion gears and pinion shaft for wear or damage.
- Check the side gear spline for wear or damage.

## REASSEMBLY

26200250011

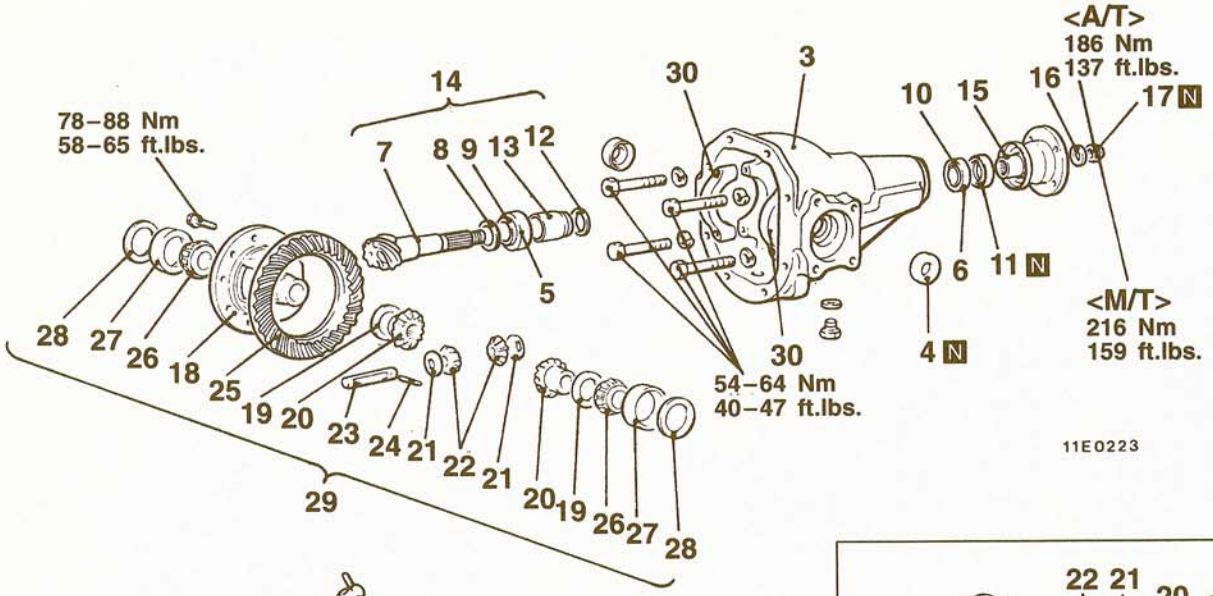


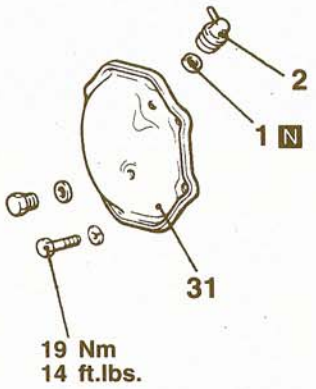


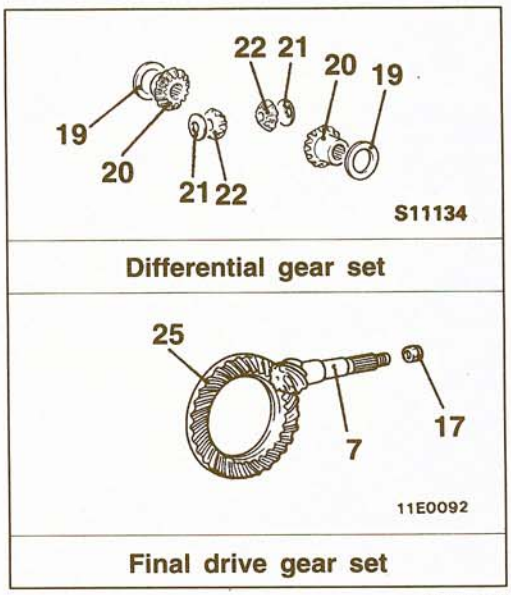


00003996

**Reassembly steps**

1. Packing
2. Vent plug
3. Gear carrier

▶A◀ 4. Oil seal

▶B◀ 5. Drive pinion front bearing outer race

▶B◀ 6. Drive pinion rear bearing outer race

▶C◀ • Pinion height adjustment

7. Drive pinion
8. Drive pinion front shim (for pinion height adjustment)
9. Drive pinion front bearing inner race

▶D◀ • Drive pinion rotation torque adjustment

10. Drive pinion rear bearing inner race
11. Oil seal
12. Drive pinion rear shim (for turning torque adjustment)
13. Drive pinion spacer
14. Drive pinion assembly
15. Companion flange
16. Washer
17. Companion flange self-locking nut
18. Differential case
19. Side gear thrust spacer
20. Side gear
21. Pinion washer
22. Pinion gear

▶E◀ • Differential gear backlash adjustment

23. Pinion shaft

▶F◀ 24. Lock pin

▶G◀ 25. Drive gear

▶H◀ 26. Side bearing inner race
27. Side bearing outer race

▶I◀ • Final drive gear backlash adjustment

28. Side bearing adjusting spacer
29. Differential case assembly
30. Bearing cap
31. Cover

**TSB Revision**

## LUBRICATION, SEALING AND ADHESION POINTS

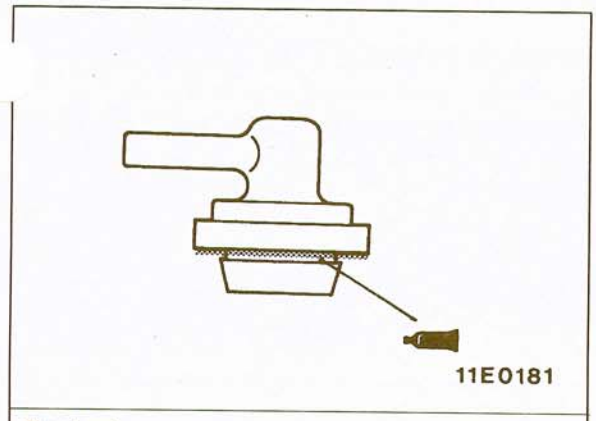


**Sealant:**
**3M ATD Part No. 8661, 8663 or equivalent**

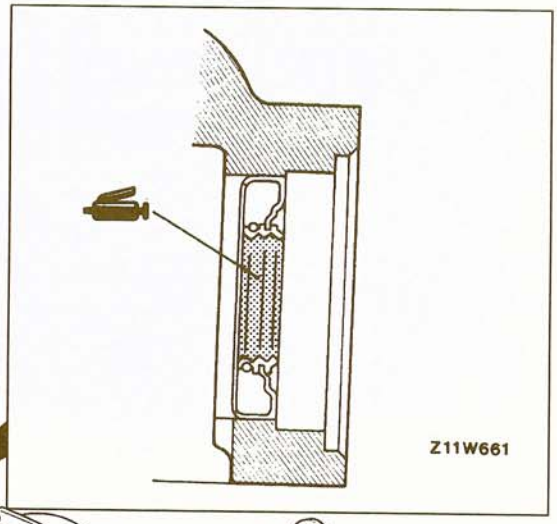


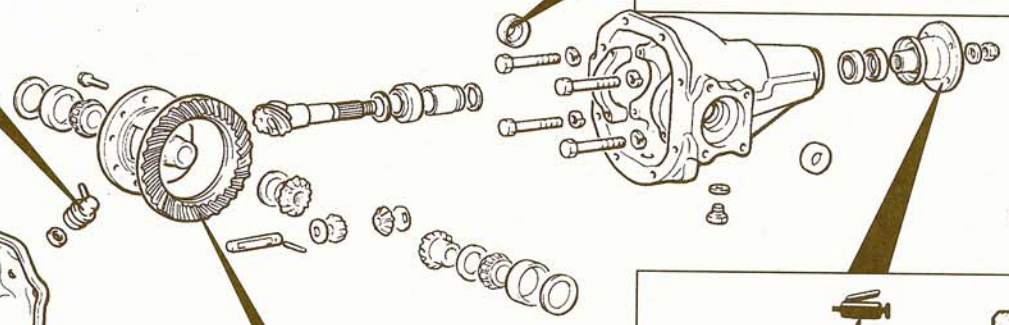


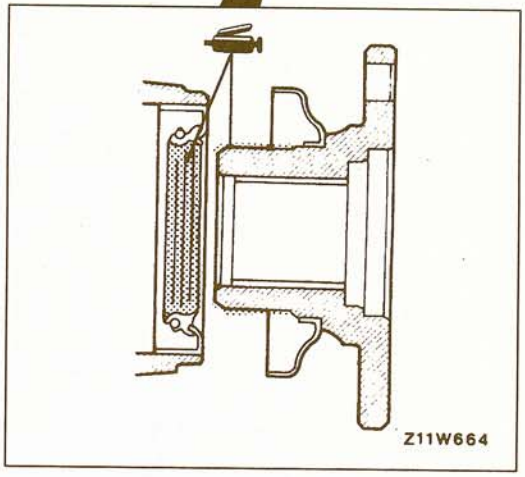


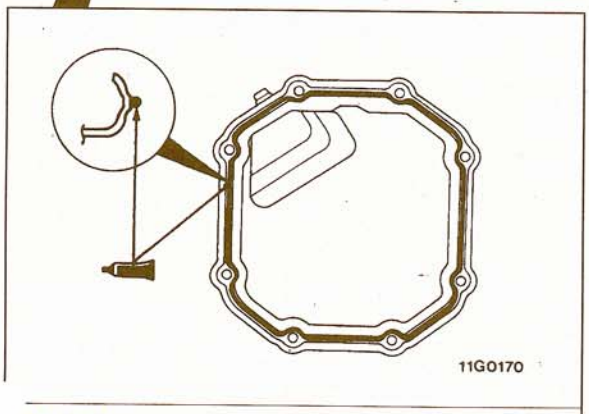


**Sealant:**
**3M ATD Part No. 8661, 8663 or equivalent**

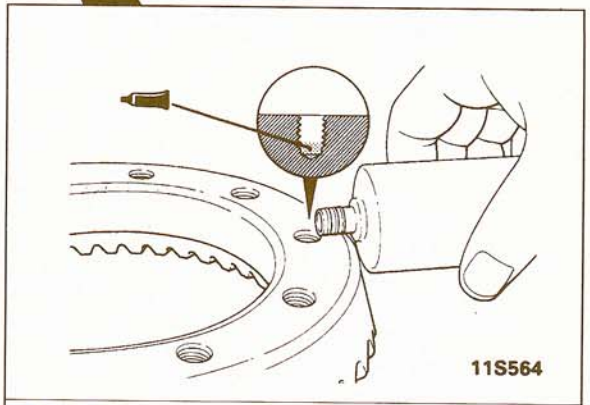


**Adhesive**
**3M Stud Locking 4170 or equivalent**

00003997

**TSB Revision**

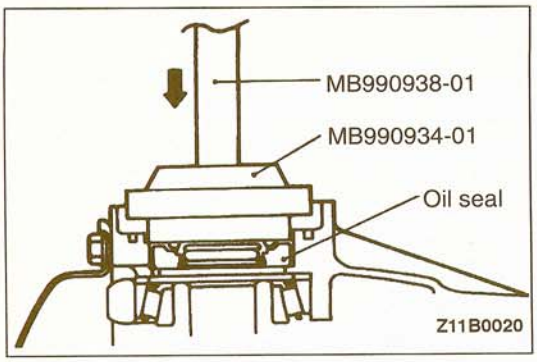


## REASSEMBLY SERVICE POINTS

### ▶A◀ OIL SEAL INSTALLATION

Use the special tool to insert the oil seal, and then app' a thin coat of multi-purpose grease to the lip of the oil seal.

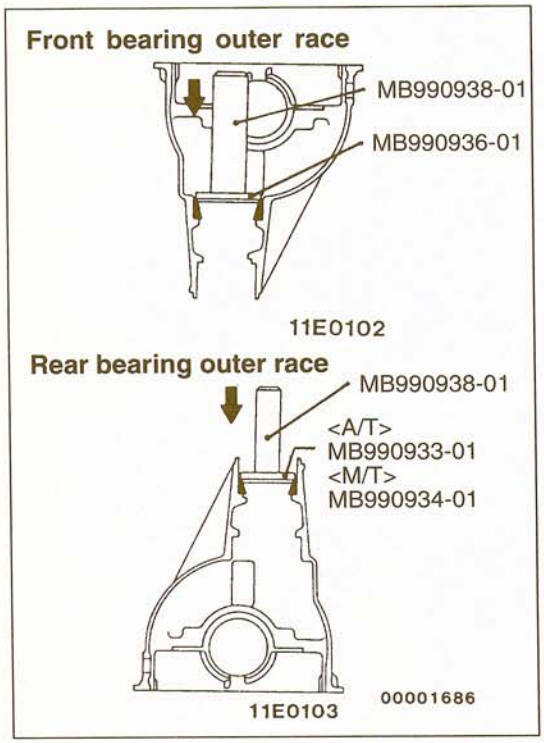


### ▶B◀ DRIVE PINION FRONT BEARING OUTER RACE/ DRIVE PINION REAR BEARING OUTER RACE INSTALLATION

Use the special tools to press-fit the drive pinion front bearing outer races into the gear carrier.

NOTE
Carry out press-fitting carefully so as not to tilt the outer race.

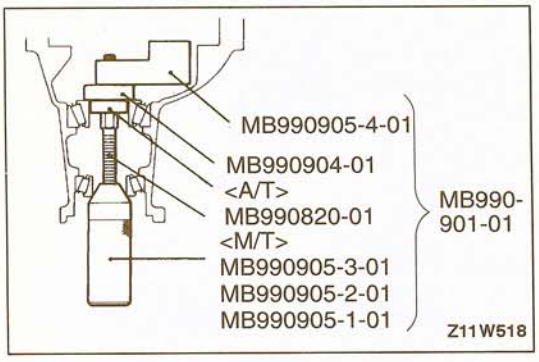


### ▶C◀ PINION HEIGHT ADJUSTMENT

Adjust the drive pinion height by the following procedure.

(1) Install the special tools and the drive pinion front and rear bearing inner races into the gear carrier in the order shown in the illustration.

(2) Tighten the handle of the special tool until the standard value for the drive pinion rotation torque is obtained.

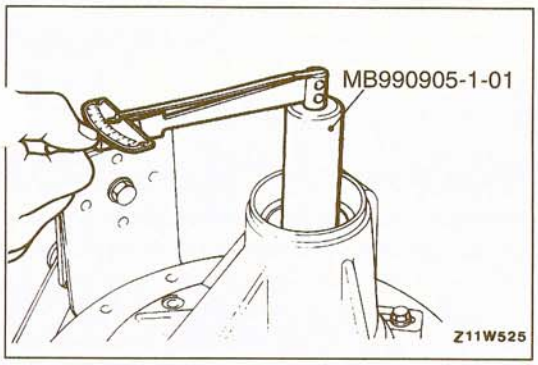


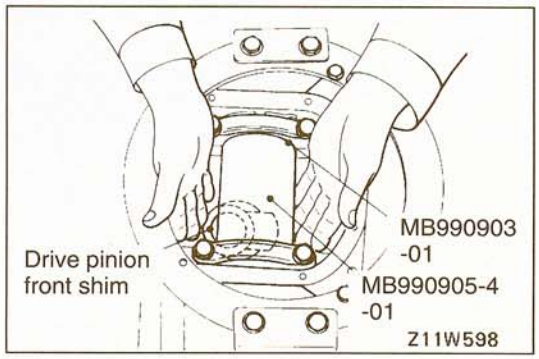


(3) Use the special tools to measure the drive pinion rotation torque (without the oil seal).

**Standard value:**

| Bearing division | Bearing lubrication | Rotation torque |
|---|---|---|
| New | None (With anti-rust agent) | 0.3–0.5 Nm 2.6–4.3 in.lbs. |
| New/reused | Gear oil applied | 0.15–0.25 Nm 1.3–2.2 in.lbs. |

NOTE
1. Gradually tighten the handle of the special tool while checking the drive pinion preload.
2. Because one rotation cannot be made when the special tool is in contact with the gear carrier, move it a few times and, after seating the bearing, measure the rotation torque.

(4) Position the special tool in the side bearing seat of the gear carrier, and then select a drive pinion front shim of a thickness which corresponds to the gap between the special tools.

NOTE
1. Be sure to clean the side bearing seat thoroughly. When positioning the special tool, check that the cut-out sections of the special tool are in the position shown in the illustration, and check that the special tool is in close contact with the side bearing seat.
2. When selecting the drive pinion front shims, keep the number of shims to a minimum.

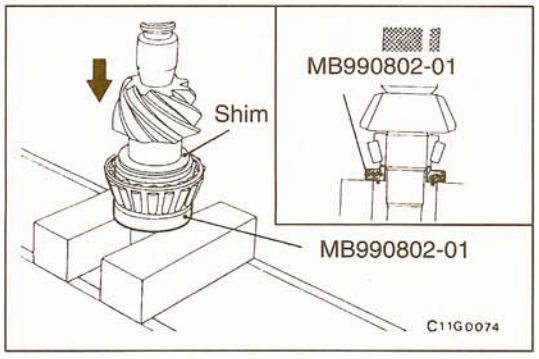


(5) Fit the selected drive pinion front shim(s) to the drive pinion, and then use the special tool to press-fit the drive pinion front bearing inner race.

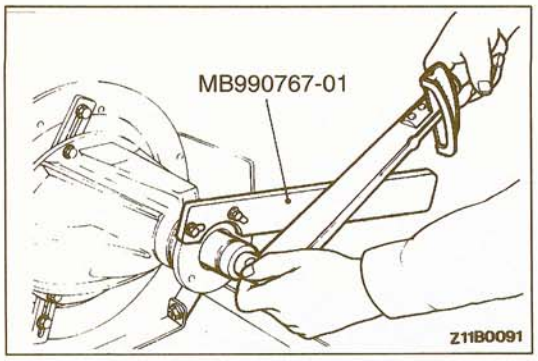


### ▶D◀ DRIVE PINION ROTATION TORQUE ADJUSTMENT

Adjust the drive pinion rotation torque by the following procedure.

**Without oil seal**

(1) Insert the drive pinion into the gear carrier, and then install the drive pinion spacer, drive pinion rear shim, drive pinion rear bearing inner race and companion flange in that order from the front of the carrier.

NOTE
Do not install the oil seal.

(2) Use the special tool to tighten the companion flange to the specified torque.

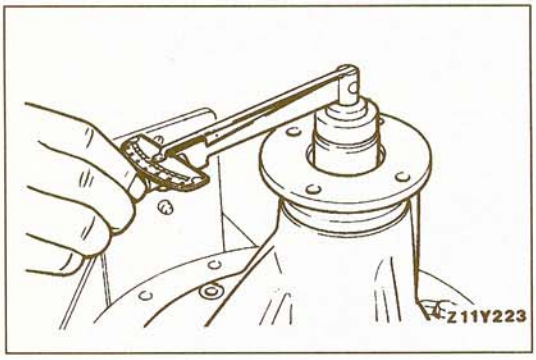


(3) Use the special tools to measure the drive pinion rotation torque (without the oil seal).

**Standard value:**

| Bearing division | Bearing lubrication | Rotation torque |
|---|---|---|
| New | None (With anti-rust agent) | 0.3–0.5 Nm 2.6–4.3 in.lbs. |
| New/reused | Gear oil applied | 0.15–0.25 Nm 1.3–2.2 in.lbs. |

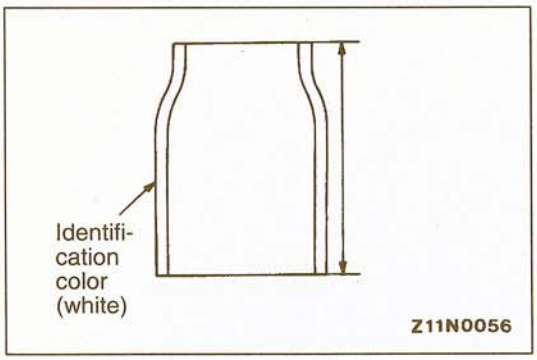


(4) If the drive pinion rotation torque is not within the standard value range, adjust the preload by replacing the drive pinion front shim(s) or the drive pinion spacer.

NOTE
When selecting the drive pinion rear shims, if the number of shims is large, reduce the number of shims to a minimum by selecting the appropriate drive pinion spacers.
Also, select the drive pinion spacer from the following two types.

| Item | <A/T> | <M/T> |
|---|---|---|
| Height of drive pinion spacer mm (in.) | 46.67 (1.837) With identification color | 56.67 (2.231) With identification color |
| | 47.01 (1.851) No identification color | 57.01 (2.244) No identification color |

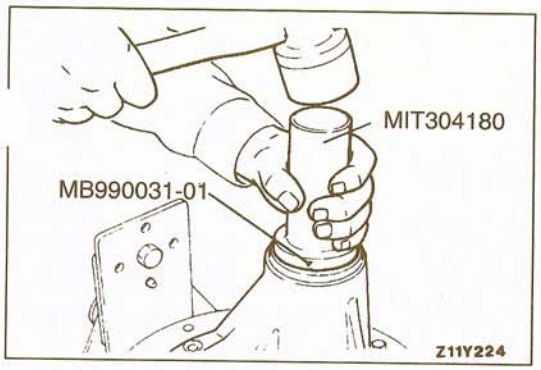


(5) Remove the companion flange and drive pinion again.

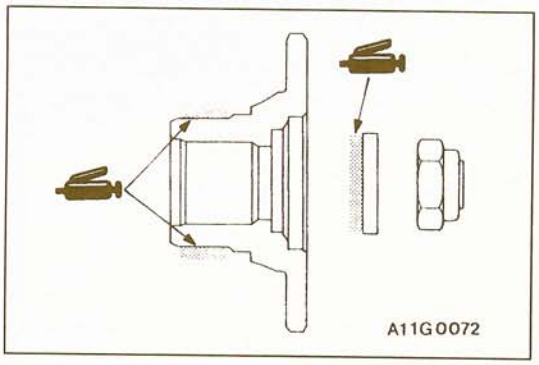


**With oil seal**

(1) After setting the drive pinion rear bearing inner race, use the special tool to drive the oil seal into the front lip of the gear carrier.
(2) Apply multi-purpose grease to the contact surfaces of the companion flange oil seal and the washer companion flange.

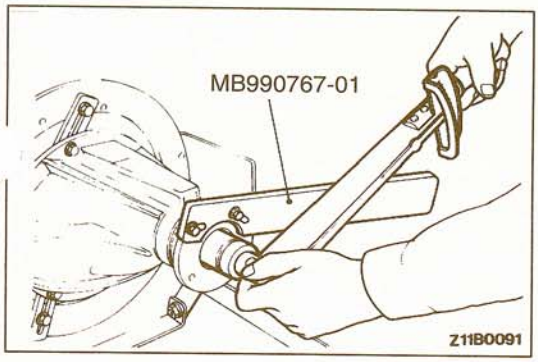


(3) Install the drive pinion assembly and companion flange with the mating marks properly aligned, and then use the special tools to tighten the companion flange self-locking nut to the specified torque.

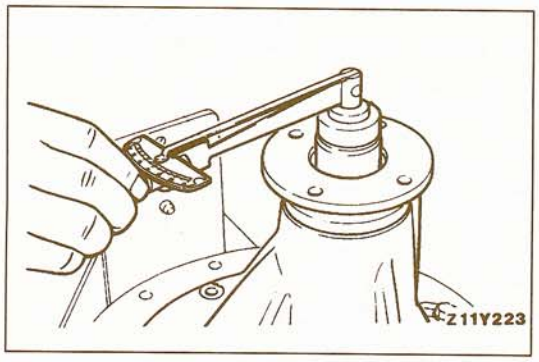


(4) Use the special tools to measure the drive pinion rotation torque (with the oil seal) to confirm that the drive pinion preload is at the standard value.

**Standard value:**

| Bearing division | Bearing lubrication | Rotation torque |
|---|---|---|
| New | None (With anti-rust agent) | 0.5–0.7 Nm 4.3–6.1 in.lbs. |
| New/reused | Gear oil applied | 0.35–0.45 Nm 3.1–3.9 in.lbs. |

(5) If the measured value is not within the standard value range, check for incorrect installation of the oil seal or incorrect tightening of the self-locking nut.

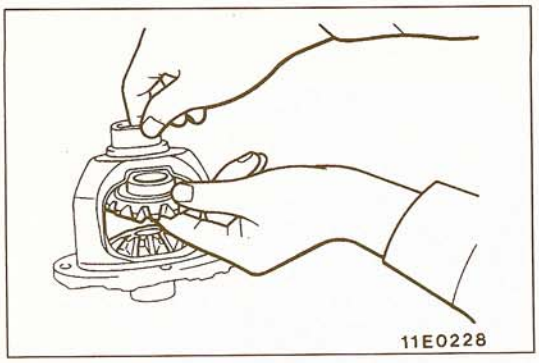


### ▶E◀ DIFFERENTIAL GEAR BACKLASH ADJUSTMENT

(1) Assemble the side gears, side gear thrust spacers, pinion gears and pinion washers into the differential case.
(2) Provisionally install the pinion shaft.

NOTE
Do not drive in the lock pin yet.

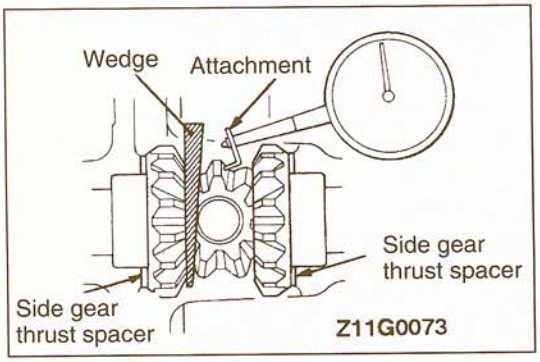


(3) Insert a wedge between the side gear and the pinion shaft to lock the side gear.
(4) Use a dial indicator to measure the differential gear backlash on the pinion gear.

**Standard value: 0.076 mm (.0030 in.) or less**

**Limit: 0.2 mm (.0079 in.)**

(5) If the differential gear backlash exceeds the limit, adjust the backlash by installing thicker side gear thrust spacers.
(6) Measure the differential gear backlash again, and check that it is within the limit.
If adjustment is not possible, replace the side gears and pinion gears as a set.

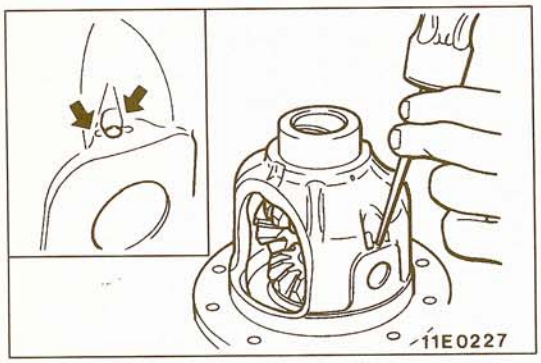


### ▶F◀ LOCK PIN INSTALLATION

(1) Align the pinion shaft lock pin hole with the differential case lock pin hole, and then drive in the lock pin.
(2) Stake the lock pin with a punch at two points.

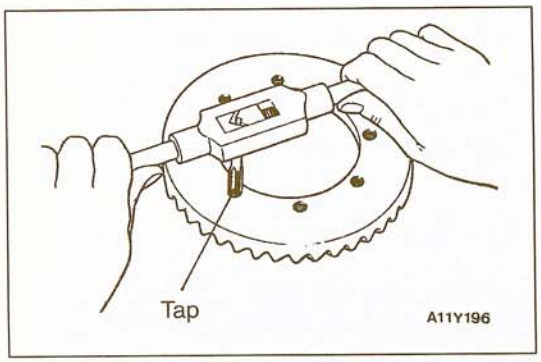


### ▶G◀ DRIVE GEAR INSTALLATION

(1) Clean the drive gear mounting bolts.
(2) Remove the adhesive which is adhering to the threaded holes of the drive gear by turning the tap tool (tap M10×1.25), and then clean the threaded holes by applying compressed air.

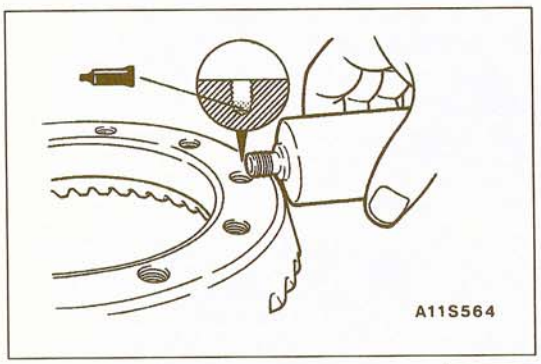


(3) Apply specified adhesive to the threaded holes of the drive gear.

**Specified adhesive:**
**3M Stud Locking Part No. 4170 or equivalent**

(4) Install the drive gear to the differential case so that the mating marks are properly aligned. Tighten the bolts the specified torque in a diagonal sequence.

**TSB Revision**

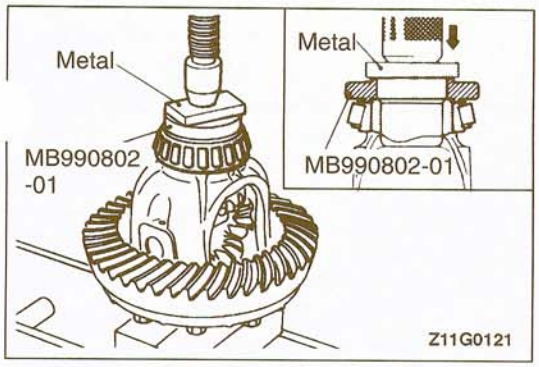


### ▶H◀ SIDE BEARING INNER RACE INSTALLATION

Use the special tool to press-fit the side bearing inner races into the differential case.

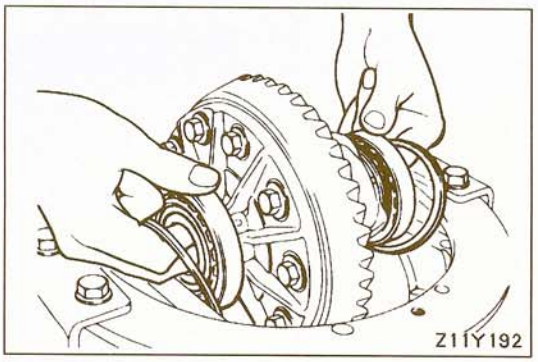


### ▶I◀ FINAL DRIVE GEAR BACKLASH ADJUSTMENT

Adjust the final drive gear backlash by the following procedure.

(1) Install side bearing spacers which are thinner than those removed to the side bearing outer races, and then install the differential case assembly to the gear carrier.

NOTE
Select side bearing spacers with the same thickness for both the drive pinion side and the drive gear side.

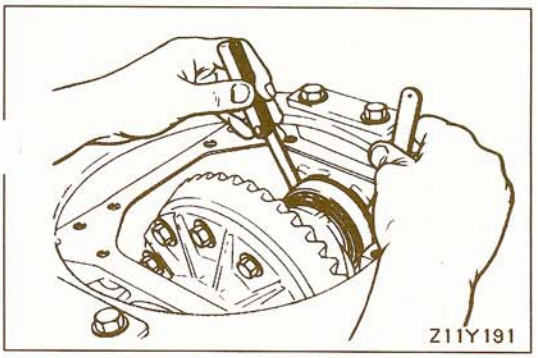


(2) Push the differential case assembly to one side, and then measure the clearance between the gear carrier and the side bearing adjusting spacer with a feeler gage.

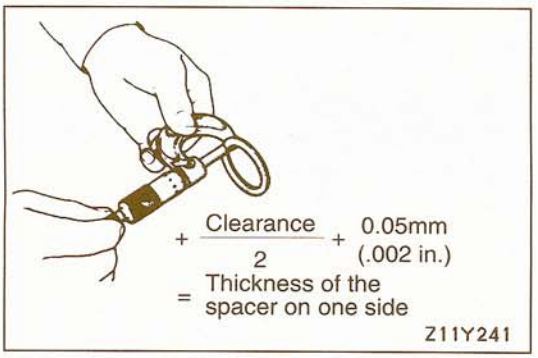


(3) Measure the thickness of the side bearing adjusting spacers on one side, select two pairs of spacers which correspond to that thickness plus one half of the thickness plus 0.05 mm (.002 in.), and then install one pair each to the drive pinion side and the drive gear side.

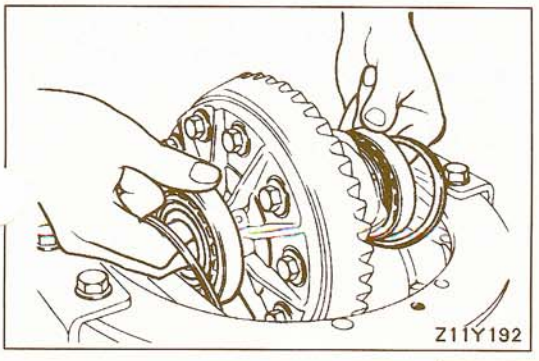


(4) Install the side bearing adjusting spacers and differential case assembly to the gear carrier as shown in the illustration.

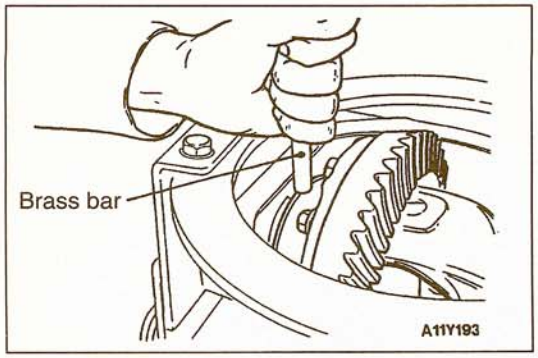


(5) Tap the side bearing adjusting spacers with a brass bar to press-fit them to the side bearing outer race.

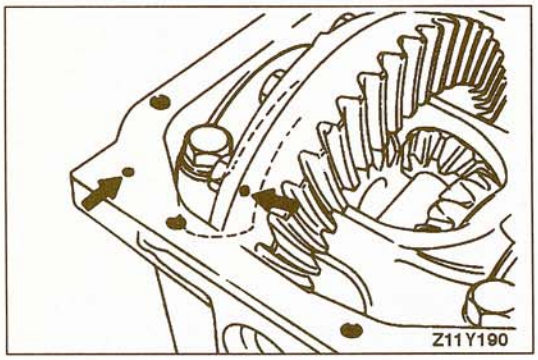


(6) Align the mating marks on the gear carrier and the bearing cap, and then tighten the bearing cap.

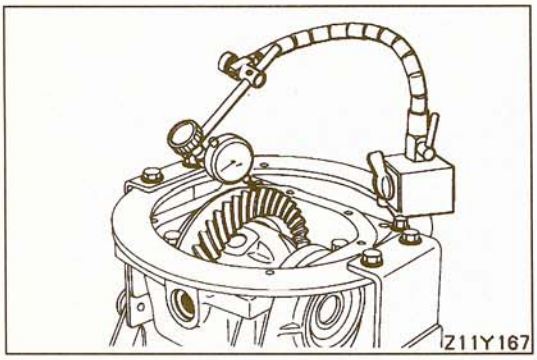


(7) With the drive pinion locked in place, use a dial indicator to measure the final drive gear backlash on the drive gear.

NOTE
Measure at four points or more on the circumferenc of the drive gear.

**Standard value: 0.11–0.16 mm (.0043–.0063 in.)**

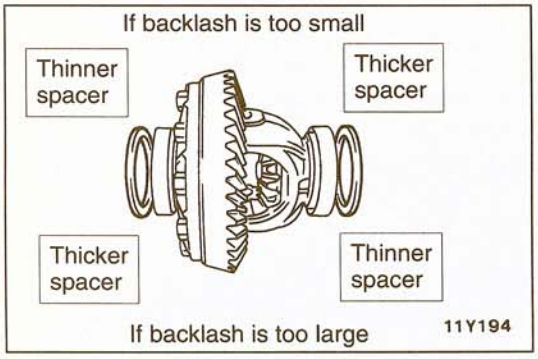


(8) Change the side bearing adjusting spacers as shown in the illustration, and then adjust the final drive gear backlash between the drive gear and the drive pinion.

NOTE
When increasing the number of side bearing adjusting spacers, use the same number for each side, and use as few spacers as possible.

(9) Check the tooth contact of the drive gear and drive pinion. If poor contact is evident, carry out adjustment. (Refer to P.26-38.)

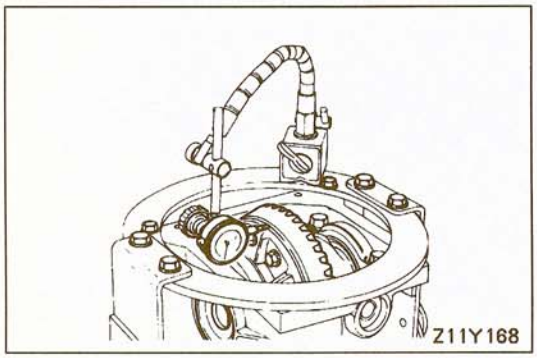


(10) Measure the drive gear runout at the shoulder on the reverse side of the drive gear.

**Limit: 0.05 mm (.0020 in.)**

(11) If the drive gear runout exceeds the limit, remove the differential case and the drive gears, move them to different positions and then reinstall them.

# REAR AXLE

## CONTENTS

27109000055


**AXLE ASSEMBLY** ..... 17

**AXLE SHAFT** ..... 19

**DIFFERENTIAL CARRIER** ..... 28

- Differential Case <3.0L engine, 3.5L engine with limited slip differential> ..... 43
- Differential Case <3.5L engine without limited slip differential> ..... 49

**GENERAL SPECIFICATIONS** ..... 2

**LUBRICANTS** ..... 5

**ON-VEHICLE SERVICE** ..... 13

- Axle Housing Oil Seal Replacement ..... 15
- Axle Shaft End Play Check ..... 13
- Gear Oil Level Check ..... 13
- Hub Bolt Replacement ..... 14
- Limited Slip Differential Preload Measurement ..... 14
- Rear Axle Total Backlash Check ..... 13
- Rear Differential Lock Detection Switch Check ..... 16
- Rear Differential Lock System Air Leakage Check ..... 16

**REAR DIFFERENTIAL LOCK** ..... 25

**SEALANTS AND ADHESIVES** ..... 5

**SERVICE SPECIFICATIONS** ..... 2

**SPECIAL TOOLS** ..... 5

**TROUBLESHOOTING** ..... 9

# GENERAL SPECIFICATIONS

27100020012

| Items | | 3.0L-12 VALVE engine, vehicles without wide fender | 3.0L-12 VALVE engine, vehicles with wide fender | 3.0L-24 VALVE engine | 3.5L engine |
|---|---|---|---|---|---|
| Axle housing type | | Banjo type | Banjo type | Banjo type | Banjo type |
| Axle shaft | Supporting type | Semi-floating type | Semi-floating type | Semi-floating type | Semi-floating type |
| Differential | Differential size | No. 7 | No. 7 | No. 7 | No. 7.5 |
| | Reduction gear type | Hypoid gear | Hypoid gear | Hypoid gear | Hypoid gear |
| | Reduction ratio | 4.625 | 4.875 | 4.636 | 4.636 |
| | Pinion gear type | 2 pinion or 4 pinion* | 2 pinion or 4 pinion* | 2 pinion or 4 pinion* | 2 pinion or 4 pinion* |

NOTE
*: Vehicles with rear differential lock or limited slip differential

# SERVICE SPECIFICATIONS

27100030060

**<Conventional differential>**

| Items | | | Standard value | Limit |
|---|---|---|---|---|
| Rear axle total backlash mm (in.) | | | – | 5 (.20) |
| Axle shaft end play mm (in.) | | | 0.25 (.0098) | – |
| Protruding length of stabilizer bar mounting bolt mm (in.) | | | 15–17 (.59–.67) | – |
| Press-fitting force of retainer N (lbs.) | | Initial press-force | 49,000 (11,016) | – |
| | | Final press-fitting force | 98,000–108,000 (22,031–24,279) | – |
| Clearance of snap ring and retainer mm (in.) | | | 0.166 (.0065) or less | – |
| Final drive gear backlash mm (in.) | | | 0.13–0.18 (.0051–.0071) | – |
| Drive gear runout mm (in.) | | | – | 0.05 (.002) |
| Differential gear backlash mm (in.) | | 3.0L engine | 0.076 (.0030) or less | 0.2 (.0079) |
| | | 3.5L engine | 0.10–0.25 (.004–.01) | – |
| Drive pinion rotation torque Nm (in.lbs.) | Without oil seal | With anti-rust agent (new) | 0.6–0.9 (5.2–7.8) | – |
| | | With gear oil applied (new or used) | 0.4–0.5 (3.5–4.3) | – |
| | With oil seal | With anti-rust agent (new) | 0.85–1.15 (7.4–10.0) | – |
| | | With gear oil applied (new or used) | 0.65–0.75 (5.6–6.5) | – |

**TSB Revision**

**<Limited slip differential>**

| Items | | | Standard value | Limit |
|---|---|---|---|---|
| Rear axle total backlash mm (in.) | | | – | 5 (.20) |
| Axle shaft end play mm (in.) | | | 0.25 (.0098) | – |
| Limited slip differential preload Nm (ft.lbs.) | | | 25 (18) or more | – |
| Protruding length of stabilizer bar mounting bolt mm (in.) | | | 15–17 (.59–.67) | – |
| Press-fitting force of retainer N (lbs.) | | Initial press-force | 49,000 (11,016) | – |
| | | Final press-fitting force | 98,000–108,000 (22,031–24,279) | – |
| Clearance of snap ring and retainer mm (in.) | | | 0.166 (.0065) or less | – |
| Final drive gear backlash mm (in.) | | | 0.13–0.18 (.0051–.0071) | – |
| Drive gear runout mm (in.) | | | – | 0.05 (.002) |
| Drive pinion rotation torque Nm (in.lbs.) | Without oil seal | With anti-rust agent (new) | 0.6–0.9 (5.2–7.8) | – |
| | | With gear oil applied (new or used) | 0.4–0.5 (3.5–4.3) | – |
| | With oil seal | With anti-rust agent (new) | 0.85–1.15 (7.4–10.0) | – |
| | | With gear oil applied (new or used) | 0.65–0.75 (5.6–6.5) | – |
| Friction plate and friction disc warping (flatness) mm (in.) | | | – | 0.08 (.0031) |
| Friction plate and friction disc wear (difference in the thickness of the friction surfaces and the projections) mm (in.) | | | – | 0.1 (.0039) |
| Difference in total thickness between the left and right clutch plated mm (in.) | | | 0.05 (.0020) or less | – |
| Clearance between spring plate and differential case mm (in.) | | | 0.06–0.20 (.0020–.0079) | – |
| Difference between left and right dimensions from back thrust face of pressure ring to end of thrust washer mm (in.) | | | 0.05 (.0020) or less | – |
| Clearance between thrust washer and differential case mm (in.) | | | 0.05–0.20 (.0020–.0079) | – |
| Clutch plate preload Nm (ft.lbs.) | When equipped with new clutch plates | | 40–75 (29–54) | – |
| | When equipped with old clutch plates | | 25–75 (29–54) | – |

**<Differential with rear differential lock>**

| Items | | | Standard value | Limit |
|---|---|---|---|---|
| Rear axle total backlash mm (in.) | | | – | 5 (.20) |
| Axle shaft end play mm (in.) | | | 0.25 (.0098) | – |
| Protruding length of stabilizer bar mounting bolt mm (in.) | | | 15–17 (.59–.67) | – |
| Press-fitting force of retainer N (lbs.) | | Initial press-force | 49,000 (11,016) | – |
| | | Final press-fitting force | 98,000–108,000 (22,031–24,279) | – |
| Clearance of snap ring and retainer mm (in.) | | | 0.166 (.0065) or less | – |
| Rear differential lock air pump pressure kPa (psi) | | | 25–40 (4–6) | – |
| Final drive gear backlash mm (in.) | | 3.0L engine | 0.13–0.18 (.0051–.0071) | – |
| | | 3.5L engine | 0.12–0.18 (.0047–.0071) | – |
| Drive gear runout mm (in.) | | | – | 0.05 (.002) |
| Differential gear backlash mm (in.) | | | 0.15–0.20 (.005–.008) | – |
| Drive pinion rotation torque Nm (in.lbs.) | Without oil seal | With anti-rust agent (new) | 0.6–0.9 (5.2–7.8) | – |
| | | With gear oil applied (new or used) | 0.4–0.5 (3.5–4.3) | – |
| | With oil seal | With anti-rust agent (new) | 0.85–1.15 (7.4–10.0) | – |
| | | With gear oil applied (new or used) | 0.65–0.75 (5.6–6.5) | – |
| Friction plate and friction disc warping (flatness) mm (in.) | | | – | 0.08 (.0031)* |
| Friction plate and friction disc wear (difference in the thickness of the friction surfaces and the projections) mm (in.) | | | – | 0.1 (.0039)* |
| Clearance between friction disc and differential case mm (in.) | | | 0.05–0.20* (.0020–.0079) | – |

NOTE
*: Vehicles with 3.0L engine

## LUBRICANTS

27100040025

| Items | | Specified lubricant | Quantity $dm^3$ (qts.) |
|---|---|---|---|
| Rear axle gear oil | Conventional differential and differential with rear differential lock | Hypoid gear oil<br>API classification GL-5 or higher<br>SAE viscosity No. 90, 80W | <3.0L engine><br>2.6 (2.75)<br><3.5L engine><br>3.2 (3.38) |
| | Limited slip differential | Hypoid gear oil<br>MITSUBISHI Genuine Gear Oil<br>Part No. 8149630EX or equivalent | |

## SEALANTS AND ADHESIVES

27100050028

| Items | Specified sealants and adhesives |
|---|---|
| Bearing case | 3M ATD Part No. 8661, 8663 or equivalent |
| Differential carrier mounting surface of axle housing | |
| Drive gear threaded hole | 3M Stud Locking Part No. 4170 or equivalent |

## SPECIAL TOOLS

27100060045

| Tool | Tool number and name | Supersession | Application |
|---|---|---|---|
|  11H0072 | MB991618<br>Hub bolt remover | – | Removal of hub bolt |
|  00004356 | MB990767<br>End yoke holder | MB990767-01 | Holding of axle shaft<br>Holding of companion flange |
|  00004349 | MB990241<br>Axle puller | MB990241-01 | Measuring the limited slip differential preload<br>Removal of axle shaft<br>(use with MB990211-01) |
|  | MB990211<br>Sliding hammer | MB990211-01 | Removal of axle shaft<br>(use with MB990241-01)<br>Removal of axle housing oil seal |
|  00004350 | MB990925<br>Bearing and oil seal installer set (Refer to GROUP 26.) | MB990925-01 | Pressing of axle housing oil seal<br>MB990932-01<br>Pressing of axle shaft oil seal<br>MB990936-01<br>Pressing of drive pinion rear bearing outer race<br>MB990937-01<br>Pressing of drive pinion front bearing outer race<br>MB990934-01 |

| Tool | Tool number and name | Supersession | Application |
|---|---|---|---|
|  | MB990938<br>Handle | MB990938-01 | Pressing of axle housing oil seal<br>Pressing of axle shaft oil seal<br>Pressing of drive pinion rear bearing outer race<br>Pressing of drive pinion front bearing outer race |
|  | MB991552<br>Rear axle bearing case remover | – | Removal of axle shaft bearing and bearing case |
| 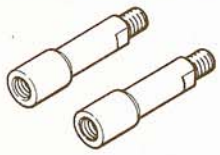 | MB991601<br>Extension bar | – | |
| 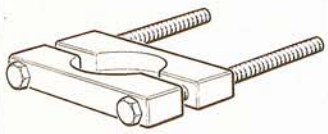 | MD998801<br>Rear axle bearing remover | – | Removal of axle shaft bearing<br>Removal of drive pinion rear bearing inner race |
| 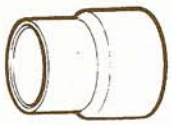 | MB990799<br>Axle bearing remover and installer | MB990799-01 | Pressing of axle shaft bearing inner race<br>Pressing of axle shaft retainer |
|  | MB990890<br>Rear suspension bushing race | MB990890-01 | Pressing of axle shaft bearing outer race |
| 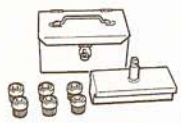 | MB990988<br>Side gear holding tool set | – | Measurement of limited slip differential preload Tool C, MB990989<br>Confirmation of rear differential lock |
|  | MB991535<br>Side gear holding tool | – | Confirmation of rear differential lock |
|  00004297 | MIT304180<br>Handle | MIT304180 | Pressing of drive pinion oil seal |

TSB Revision

| Tool | Tool number and name | Supersession | Application |
|---|---|---|---|
|  00004290 | MIT991168<br>Drive pinion oil seal installer | MIT991168 | Pressing of drive pinion oil seal |
|  00004364 | MB990201<br>Adjustable wrench | MB990201-01 | Removal and adjustment of side bearing nut |
|  00004355 | MB990339<br>Pinion carrier bearing puller | MB990339-01 | Removal of side bearing inner race (use with MB990811-01)<br>Removal of drive pinion rear bearing inner race |
|  00004298 | MIT303173<br>Insert | MIT303173 | |
|  | MIT44801<br>Collet set | MIT44801 | |
|  | MB990810<br>Side bearing puller | MB990810-01 | Removal of side bearing inner race |
|  00004351 | MB990811<br>Side bearing cup remover step plate | MB990811-01 | |
| 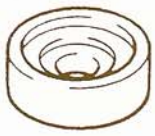 | MB991407<br>Differential rear support arbor | – | |
|  | MB991445<br>Bush remover and Installer base | – | Pressing of drive pinion rear bearing outer race |

| Tool | Tool number and name | Supersession | Application |
|---|---|---|---|
|  00004357 | MB990901<br>Pinion height gage set | MB990901-01 | Measuring the pinion height |
|  00004299 | MIT215838<br>Aligning adapter | MIT215838 | |
|  00004300 | MIT215839<br>Gage disc | MIT215839 | |
| 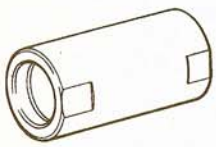 | MB991534<br>Cylinder gauge | – | |
|  | MB990802<br>Bearing installer | MB990802-01 | Pressing of drive pinion rear bearing inner race<br>Pressing of side bearing inner race |
|  | MB998812<br>Installer cap | – | Pressing of side bearing inner race |
|  | MB998829<br>Installer adaptor | – | |

MB990988

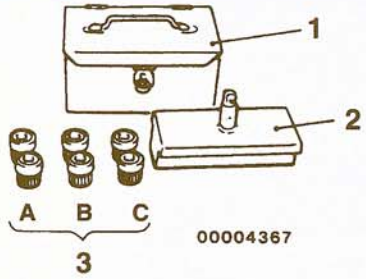


| Tool number | | Name | O.D. mm (in.) |
|---|---|---|---|
| 1 | MB990551 | Box | – |
| 2 | MB990989 | Base | – |
| 3 | (MB990990) | Tool A | 25 (.98) |
| | (MB990991) | Tool B | 28 (1.10) |
| | (MB990992) | Tool C | 31 (1.22) |

**TSB Revision**

# TROUBLESHOOTING

27100070031

## AXLE SHAFT, AXLE HOUSING

| Symptom | Probable cause | Remedy |
|---|---|---|
| Noise while wheels are rotating | Brake drag | Replace |
| | Bent axle shaft | |
| | Worn or scarred axle shaft bearing | |
| Grease leakage | Worn or damaged oil seal | Replace |
| | Malfunction of bearing seal | |

## DIFFERENTIAL (CONVENTIONAL DIFFERENTIAL)

| Symptom | Probable cause | Remedy |
|---|---|---|
| Constant noise | Improper final drive gear tooth contact adjustment | Correct or replace |
| | Loose, worn or damaged side bearing | |
| | Loose, worn or damaged drive pinion bearing | |
| | Worn drive gear, drive pinion | Replace |
| | Worn side gear thrust washer or pinion shaft | |
| | Deformed drive gear or differential case | |
| | Damaged gear | |
| | Foreign material | Eliminate the foreign material and check; replace if necessary |
| | No oil | Fill or change |
| Gear noise while driving | Poor gear engagement | Correct or replace |
| | Improper gear adjustment | |
| | Improper drive pinion preload adjustment | |
| | Damaged gear | Replace |
| | Foreign material | Eliminate the foreign material and check; replace the parts if necessary |
| | Insufficient oil | Fill or change |
| Gear noise while coasting | Improper drive pinion preload adjustment | Correct or replace |
| | Damaged gear | Replace |
| Bearing noise while driving or coasting | Cracked or damaged drive pinion rear bearing | Replace |
| Noise while turning | Loose side bearing | Replace |
| | Damaged side gear, pinion gear or pinion shaft | |
| Heat | Improper gear backlash | Adjust |
| | Excessive preload | |
| | Insufficient oil | Fill or change |

| Symptom | Probable cause | Remedy |
|---|---|---|
| Oil leakage | Clogged breather hose | Clean or replace |
| | Cover tightened not | Retighten, apply sealant, or replace the gasket |
| | Seal malfunction | |
| | Worn or damaged oil seal | Replace |
| | Excessive oil | Adjust the oil level |

DIFFERENTIAL (LIMITED-SLIP DIFFERENTIAL AND DIFFERENTIAL WITH REAR DIFFERENTIAL LOCK)

| Symptom | Probable cause | Remedy |
|---|---|---|
| Abnormal noise during driving or gear changing (*1) | Excessive final drive gear backlash | Adjust |
| | Insufficient drive pinion preload | |
| | Excessive differential gear backlash | Adjust or replace |
| | Worn spline of a side gear | Replace |
| | Loose spline coupling self-locking nut | Retighten or replace |
| Abnormal noise when cornering | Damaged differential gears | Replace |
| | Damaged pinion shaft | |
| | Nicked and/or abnormal wear of inner and outer clutch plates | |
| | Poor gear oil | |
| | Abnormally worn or damaged thrust washer | |
| | Improper gear oil quantity | Refill or replace |
| Gear noise (*2) | Improper final drive gear tooth contact adjustment | Adjust or replace |
| | Incorrect final drive gear backlash | Adjust |
| | Improper drive pinion preload adjustment | |
| | Damaged, broken, and/or seized tooth surfaces of the drive gear and drive pinion | Replace |
| | Damaged, broken, and/or seized drive pinion bearings | |
| | Damaged broken, and/or seized side bearings | |
| | Damaged differential case | |
| | Poor gear oil | |
| | Improper gear oil quantity | Refill or replace |

NOTE

*1: In addition to a malfunction of the differential carrier components, abnormal noise can also be caused by the universal joint of the propeller shaft, the axle shafts, the wheel bearings, etc. Before disassembling any parts, take all possibilities into consideration and confirm the source of the noise.

*2: Noise from the engine, muffler vibration, transmission, propeller shaft, wheel bearings, tires, body, etc., is eas mistaken as being caused by malfunction in the differential carrier components. Be extremely careful and attentive when performing the driving test, etc.
Test methods to confirm the source of the abnormal noise include: coasting, acceleration, constant speed driving, raising the rear wheels on a jack, etc. Use the method most appropriate to the circumstances.

**TSB Revision**

| Symptom | Probable cause | Remedy |
|---|---|---|
| Gear oil leakage | Worn or damaged front oil seal, or an improperly installed oil seal | Replace |
| | Damaged gasket | |
| | Loose spline coupling self-locking nut | Retighten or replace |
| | Loose filler or drain plug | Retighten or apply adhesive |
| | Clogged or damaged breather hose | Clean or replace |
| Seizure (*3) | Improper final drive gear backlash | Adjust |
| | Excessive drive pinion preload | |
| | Excessive side bearing preload | |
| | Improper differential gear backlash | |
| | Excessive clutch plate preload | |
| | Improper gear oil | Replace |
| | Improper gear oil quantity | Refill or replace |
| Breakdown (*4) | Incorrect final drive gear backlash | Adjust |
| | Incorrect drive pinion preload | |
| | Incorrect side bearing preload | |
| | Excessive differential gear backlash | |
| | Incorrect clutch plate preload | |
| | Loose drive gear clamping bolts | Retighten |
| | Operational malfunction due to overloaded clutch | Avoid excessively rough operation |
| Limited slip differential does not function (on snow, mud, ice, etc.). | The limited slip device is damaged | Disassemble, check the functioning, and replace the damaged parts |

NOTE
*3: In the event of seizure, disassemble and replace the parts involved, and also be sure to check all components for any irregularities and repair or replace as necessary.
*4: In addition to disassembling and replacing the failed parts, be sure to check all components for irregularities and repair or replace as necessary.

## REAR DIFFERENTIAL LOCK

1. Troubleshooting procedures
   (1) Check that there are no cracks or damage in the air hose.
   (2) Check that the connectors for all parts are securely connected and that no fuses are blown.
   (3) Make sure you understand the check contents and the order for troubleshooting in the quick reference table, and check according to the order given.
2. Troubleshooting quick-reference table
   (1) If the result of checking according to the order in the table below shows that there is no abnormality, the cause is probably a malfunction of the control unit.

| Order | Check location | Check points | Normal condition | Probable Cause | Remedy |
|---|---|---|---|---|---|
| 1 | Air hose | Check visually | Air doesn't leak. | Air leaking from hose connection | Repair or replace the air hose |
| 2 | Rear differential lock switch | Refer to P.27-27. | | Switch is defective | Replace the switch |
| 3 | Center differential lock operation detection switch | Move the transfer lever to the "4HLc" or "4LLc" position and check the continuity. | Continuity | Switch is defective | Replace the switch |
| 4 | Rear differential lock detection switch | Refer to P.27-16. | Continuity | Switch is defective | Replace the switch |
| 5 | Air pump | Refer to P.27-26. | | Air pump is defective | Replace the air pump |
| 6 | Actuator | Refer to P.27-30. | | Actuator is defective | Replace the actuator |

   (2) Control unit output voltage check
   Refer to P.27-26.

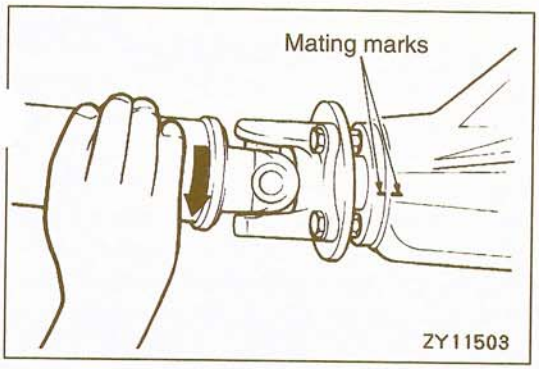


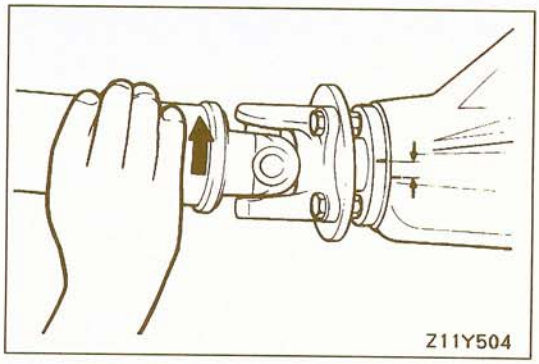


# ON-VEHICLE SERVICE

27100120026

## REAR AXLE TOTAL BACKLASH CHECK

If the vehicle vibrates and produces a booming sound due to the an imbalance in the drive system, measure the rear axle total backlash by the following procedure to see if the differential carrier assembly requires removal.

(1) Park the vehicle on a flat, level surface.
(2) Place the transmission control lever to the neutral position, and place the transfer control lever to the neutral position. Then pull the parking brake lever and raise the vehicle on a jack.
(3) Turn the companion flange clockwise as far as it will go. Make the mating mark on the dust cover of the companion flange and on the differential carrier.
(4) Turn the companion flange anti-clockwise as far as it will go, and measure the distance through which the mating marks moved. If the backlash exceeds the limit, remove the differential carrier assembly and adjust the backlash.

**Limit: 5 mm (.20 in.)**

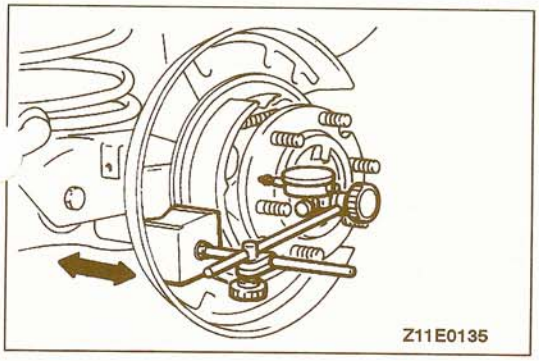


## AXLE SHAFT END PLAY CHECK

27100130012

Use a dial indicator to measure the axle shaft end play.

**Standard value: 0.25 mm (.0098 in.)**

If the axle shaft end play exceeds the standard value, replace the bearing with a new one.

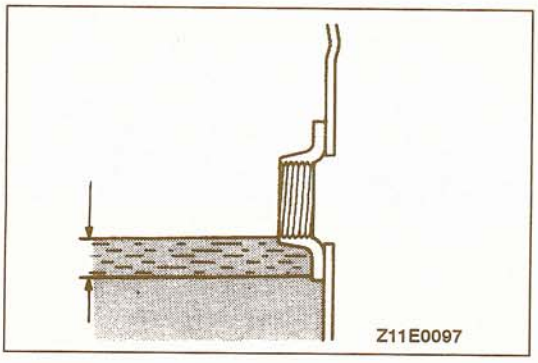


## GEAR OIL LEVEL CHECK

27200120029

Remove the filler plug and check the oil level.
Check that the gear oil level is not 8 mm (.3 in.) below the bottom of the filler plug hole.

**Specified gear oil:**

**<Conventional differential, Differential with rear differential lock>**

**Hypoid gear oil API classification GL-5 or higher**
**SAE viscosity No. 90, 80W**
**<3.0L engine> 2.6 $dm^3$ (2.75 qts.)**
**<3.5L engine> 3.2 $dm^3$ (3.38 qts.)**

**<Limited slip differential>**

**Hypoid gear oil MITSUBISHI Genuine Gear Oil Part No. 8149630 EX or equivalent**
**<3.0L engine> 2.6 $dm^3$ (2.75 qts.)**
**<3.5L engine> 3.2 $dm^3$ (3.38 qts.)**

## LIMITED SLIP DIFFERENTIAL PRELOAD MEASUREMENT

27300090019

To measure the preload of the limited slip differential, se the transmission control lever to the neutral position, loc. the front wheels and fully release the parking brake.
One of the rear wheels should be maintained in contact with the ground surface, and the other should be raised up.
Measure the starting torque at the side on which the wheel is in the raised position by using the following procedures.

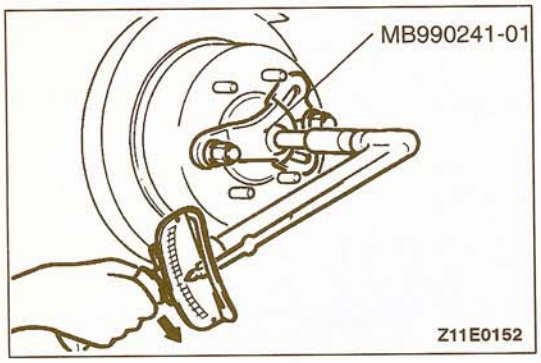


(1) Remove the wheel.
(2) Mount the special tool to the hub bolts by using the hub nuts.
(3) Find the limited slip differential preload measuring the axle shaft starting torque in the forward direction with a torque wrench.

**Standard value: 25 Nm (18 ft.lbs.) or more**

(4) If the torque is less than the standard value, remove the limited slip differential from the vehicle and disassemble it.

## HUB BOLT REPLACEMENT

27100100044

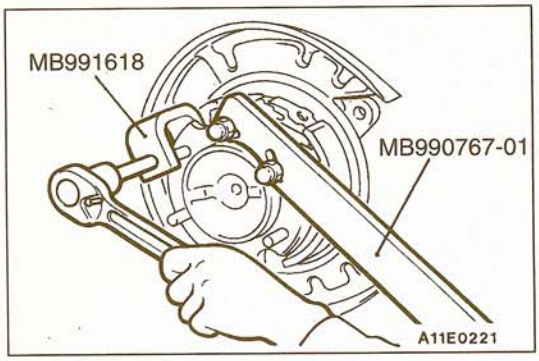


(1) Remove the caliper assembly and secure it with wire so that it does not fall.
(2) Remove the brake disc.
(3) Use the special tool to remove the hub bolt.

**Caution**
**Insert the spacer of thickness of approx. 3 mm between the special tool (MB991618) and the dust cover to protect the dust cover.**

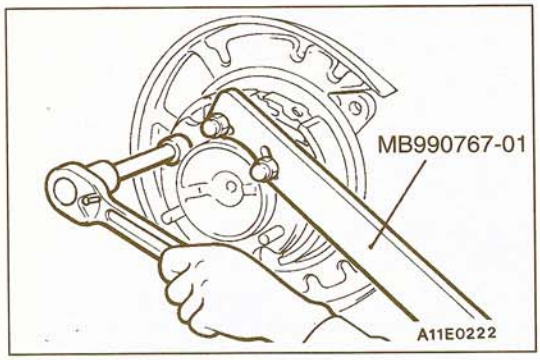


(4) Using the hub nut, tighten the hub bolt to install it.

## AXLE HOUSING OIL SEAL REPLACEMENT

27100150018

1. Release coupling between parking brake cable and the backing plate.
2. Before disconnecting the brake pipe, drain the brake fluid from the bleeder screw.
3. Remove the nuts securing the backing plate to the axle housing.

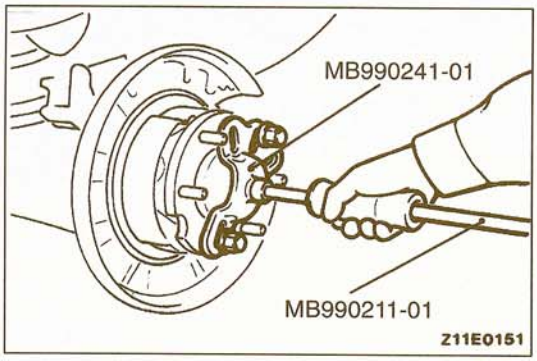


4. Pull the rear axle shaft from axle housing. If the rear axle shaft is hard to remove, use the special tools.

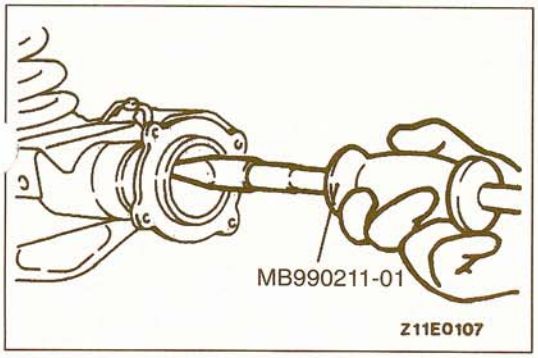


5. Use special tools with hook attached to remove the oil seal.
6. Apply multipurpose grease to the oil seal fitting area of the rear axle housing.

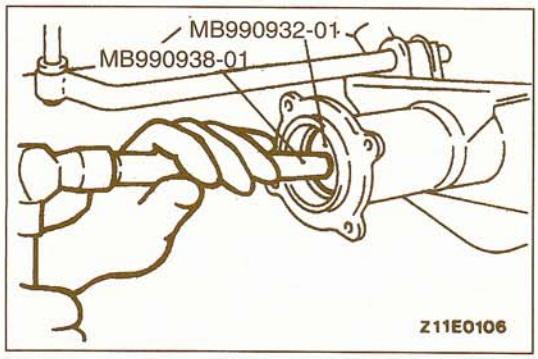


7. Drive the new oil seal into the rear axle housing end by using the special tool.
8. Apply multipurpose grease to the oil seal lip.
9. Install the rear axle shaft.
10. Install the brake tube and perform air bleeding of the brake system from the air bleeder. (Vehicle without A.B.S.: Refer to GROUP 35A – On-vehicle Service, Vehicles with A.B.S.: Refer to GROUP 35C – On-vehicle Service.)
11. Install the parking brake cable and adjust the parking brake lever stroke. (Refer to GROUP 36 – On-vehicle Service.)

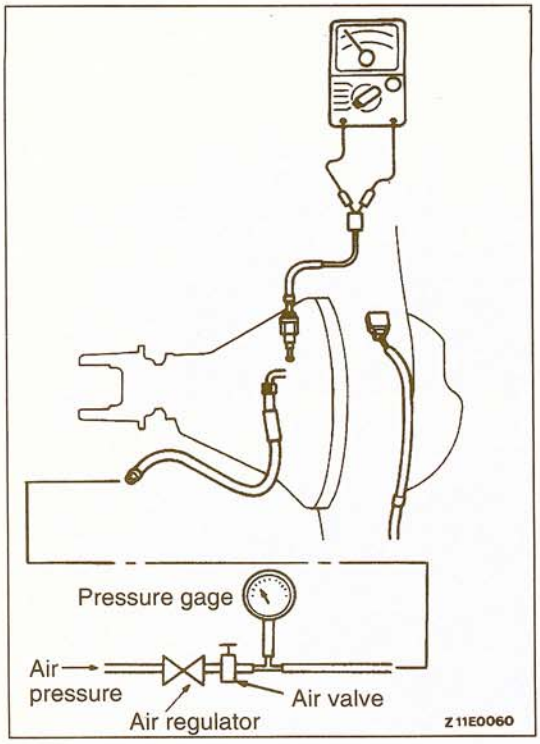


## REAR DIFFERENTIAL LOCK DETECTION SWITCH CHECK

27200100016

1. Raise up the vehicle.
2. Remove the air pipe and air hose connections.
3. Connect a pressure gauge and air regulator, for adjusting the compressed air pressure, to the air hose.
4. Adjust the compressed air pressure with the air regulator until the pressure gage shows a pressure of approx. 25 kPa (4 psi.).

   **Caution**
   **Do not apply a higher pressure.**
5. Hold the wheel on one side of the vehicle stationary, and slowly turn the wheel on the other side.
6. Check for continuity in the rear differential lock detection switch.

| | |
|---|---|
| When air is supplied | Continuity |
| When air is released | No continuity |

7. If the detection switch is defective, first remove the differential carrier, then remove the detection switch.

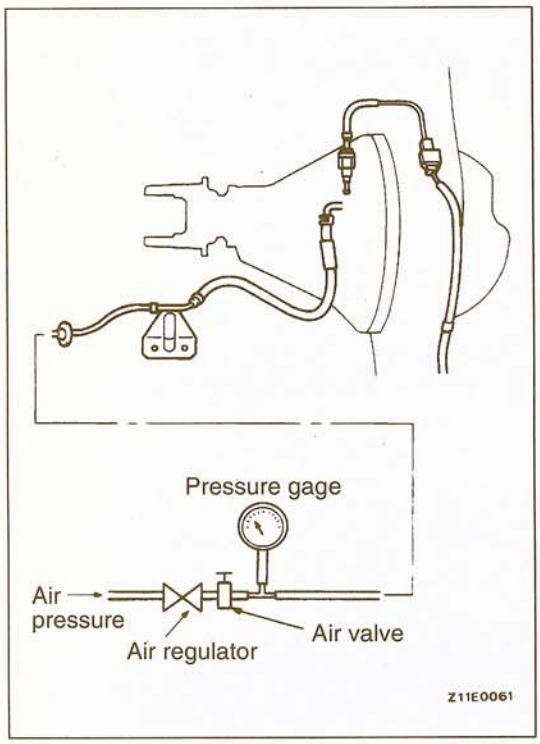


## REAR DIFFERENTIAL LOCK SYSTEM AIR LEAKAGE CHECK

27200110019

1. Remove the rear differential lock air pump and remove the air hose from the air pump. (Refer to P.27-25.)
2. Connect a pressure gage and air regulator, for adjusting the compressed air pressure to the air hose.
3. Adjust the compressed air pressure with the air regulator until the pressure gage shows a pressure of approx. 35 kPa (5 psi.).

   **Caution**
   **Do not apply a higher pressure.**
4. Shut off the air valve.
5. If after approximately 10 minutes have passed, the pressure has dropped, it can be concluded that there is no leaking of air from the air hose, etc.

# AXLE ASSEMBLY

27100170014

## REMOVAL AND INSTALLATION

**Post-installation Operation**
- Air Bleeding from Brake Lines
  (Vehicles without A.B.S.: Refer to GROUP 35A – On-vehicle Service.)
  (Vehicles with A.B.S.: Refer to GROUP 35C – On-vehicle Service.)
- Load Sensing Spring Length Checking and Adjustment
  (Refer to GROUP 35A – On-vehicle Service.)
- Parking Brake Lever Stroke Adjustment
  (Refer to GROUP 36 – On-vehicle Service.)

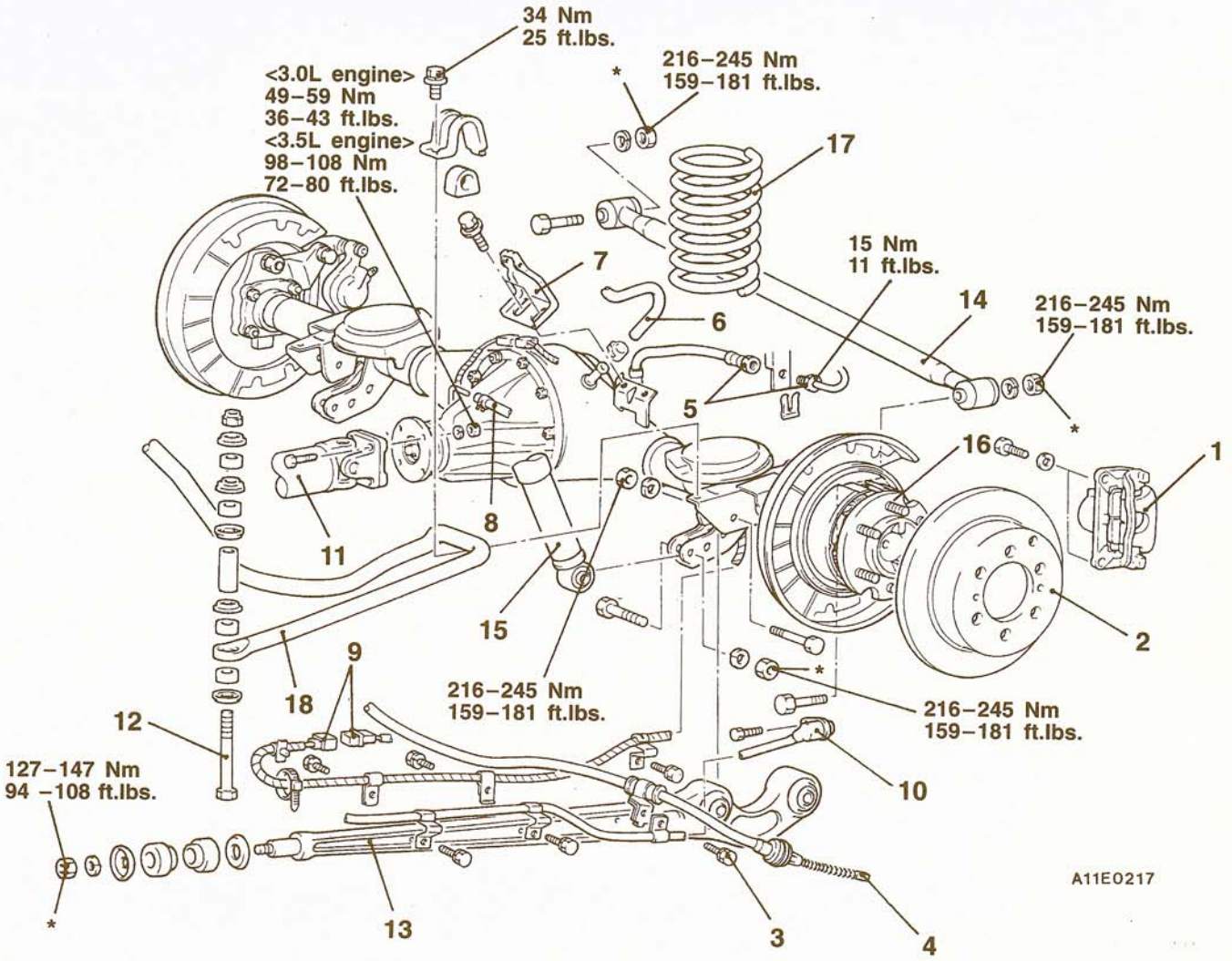


**Removal steps**

1. Rear brake assembly
2. Brake disc
3. Parking brake cable or speed sensor attaching bolt
4. Parking brake cable end connection
5. Brake hose connection
6. Breather hose connection
7. Spring support for load sensing proportioning valve
8. Hose connection <Vehicles with rear differential lock>
9. Rear differential lock position harness connector <Vehicles with rear differential lock>
10. Speed sensor <Vehicles with ABS> (Refer to GROUP 35C – Wheel Speed Sensor.)
- ◀A▶ ▶D◀ 11. Rear propeller shaft
- ▶C◀ 12. Stabilizer bar mounting bolt
- ◀B▶ ▶B◀ 13. Lower arm
- ▶A◀ 14. Lateral rod
15. Shock absorber connection (lower part only)
- ◀C▶ 16. Axle assembly
17. Coil spring
18. Stabilizer bar

NOTE
The part with * must be tightened with the vehicle lowered to the ground.

**TSB Revision**

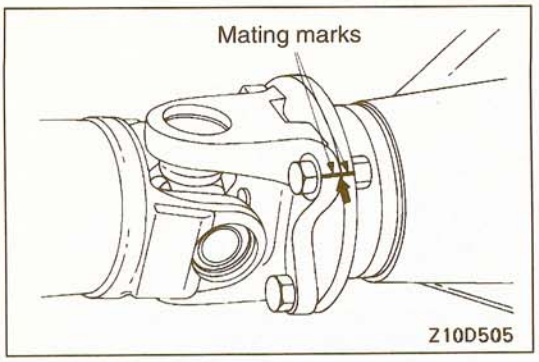


## REMOVAL SERVICE POINTS

### ◀A▶ REAR PROPELLER SHAFT REMOVAL

Make the mating marks on the flange yoke of the rear propelle shaft and on the companion flange of the differential case.

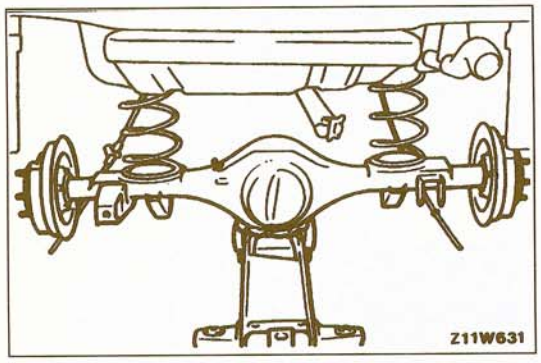


### ◀B▶ LOWER ARM REMOVAL

After supporting the axle assembly by floor jacks, remove the lower arm.

### ◀C▶ AXLE ASSEMBLY REMOVAL

Draw out the axle assembly toward the rear of the vehicle.

**Caution**
**The axle assembly is unsuitable on the jack; be careful not to allow it to fall.**

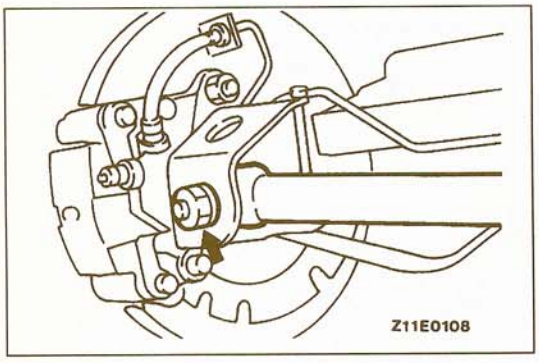


## INSTALLATION SERVICE POINTS

### ▶A◀ LATERAL ROD INSTALLATION

Install the lateral rod from the axle housing side.

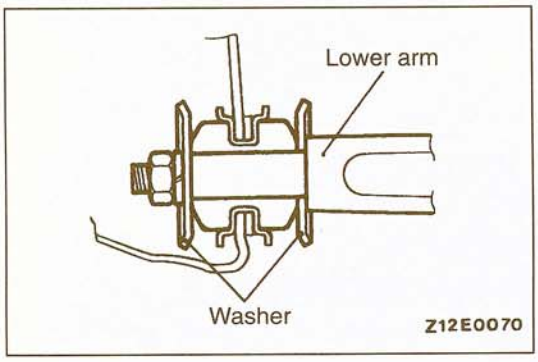


### ▶B◀ LOWER ARM INSTALLATION

Install the washers (facing as shown in the figure) to the lower arm.

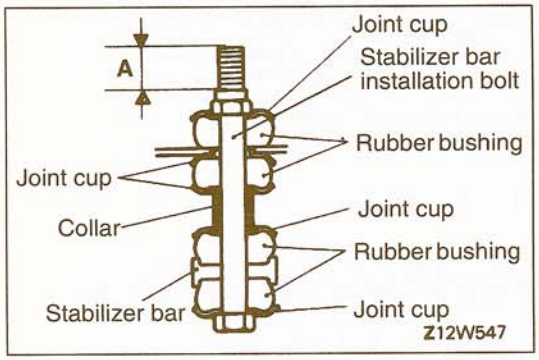


### ▶C◀ STABILIZER BAR MOUNTING BOLT INSTALLATION

When installing the stabilizer bar to the stabilizer bar bracket, check that the amount of projection of the stabilizer bar installation bolt is within the standard value range.

**Standard value (A): 15–17 mm (.59–.67 in.)**

### ▶D◀ REAR PROPELLER SHAFT INSTALLATION

Align the mating marks on the flange yoke and the companion flange to install the rear propeller shaft.

TSB Revision

# AXLE SHAFT

27100250015

## REMOVAL AND INSTALLATION

**Post-installation Operation**
- Air Bleeding from Brake Lines
  (Vehicles without A.B.S.: Refer to GROUP 35A – On-vehicle Service.)
  (Vehicles with A.B.S.: Refer to GROUP 35C – On-vehicle Service.)
- Parking Brake Lever Stroke Adjustment
  (Refer to GROUP 36 – On-vehicle Service.)

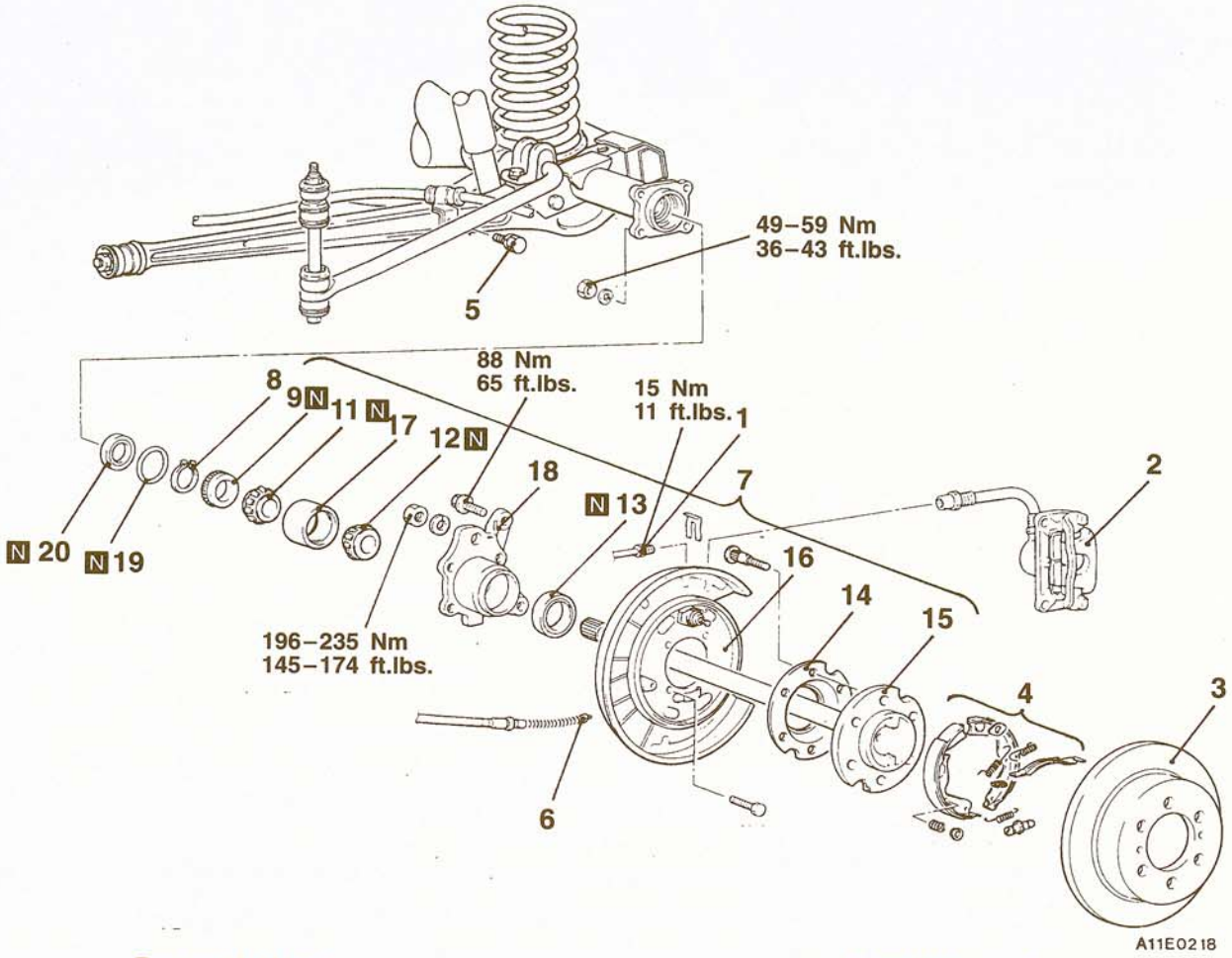


**Removal steps**

1. Brake tube connection
2. Rear brake assembly
3. Brake disc
4. Parking brake assembly
5. Parking brake cable attaching bolt
6. Parking brake cable end
◀A▶ 7. Axle shaft assembly
8. Snap ring
◀B▶ 9. Retainer
◀C▶ 10. Axle shaft sub assembly
(Parts from step 12 to step 15)
11. Bearing inner race (inner)
◀D▶ 12. Bearing inner race (outer)
13. Oil seal
14. Dust cover
15. Axle shaft
16. Backing plate
◀E▶ 17. Bearing outer race
18. Bearing case
19. O-ring
◀F▶ 20. Oil seal

**Installation steps**

▶A◀ 20. Oil seal
19. O-ring
18. Bearing case
▶B◀ 17. Bearing outer race
16. Backing plate
15. Axle shaft
14. Dust cover
12. Bearing inner race (outer)
▶C◀ 13. Oil seal
▶D◀ 11. Bearing inner race (inner)
▶E◀ 9. Retainer
▶F◀ 8. Snap ring
7. Axle shaft assembly
6. Parking brake cable end
5. Parking brake cable attaching bolt
4. Parking brake assembly
3. Brake disc
2. Rear brake assembly
1. Brake tube connection

**TSB Revision**

## LUBRICATION AND SEALING POINTS

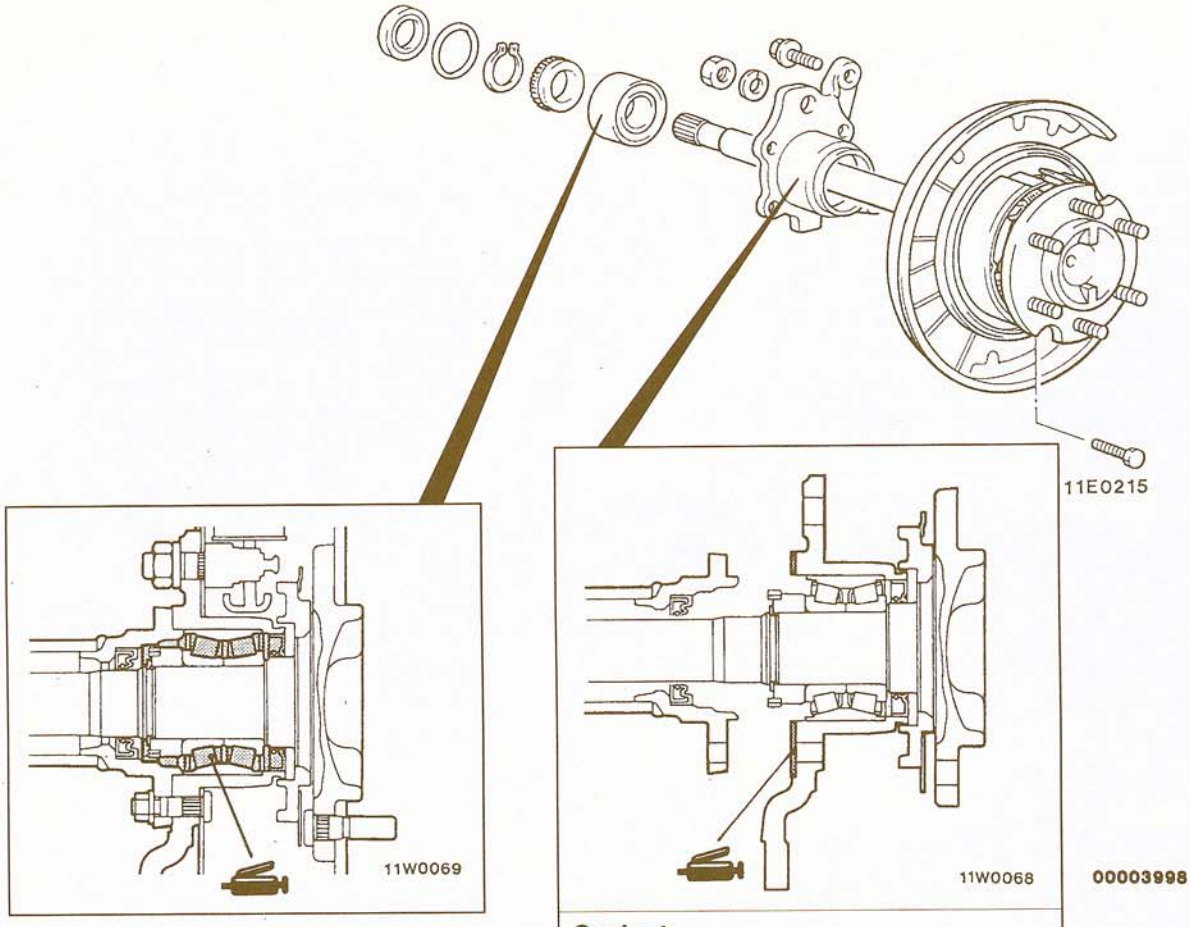


**Sealant:**
**3M ATD Part. No. 8661, 8663 or equivalent**

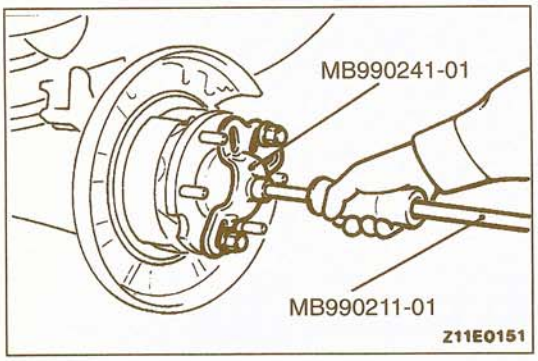


## REMOVAL SERVICE POINTS

### ◀A▶ AXLE SHAFT ASSEMBLY REMOVAL

Pull the rear axle shaft with rear brake assembly attached. If the rear axle shaft is difficult to remove, use the special tools.

NOTE
Do not damage the oil seal during removal.

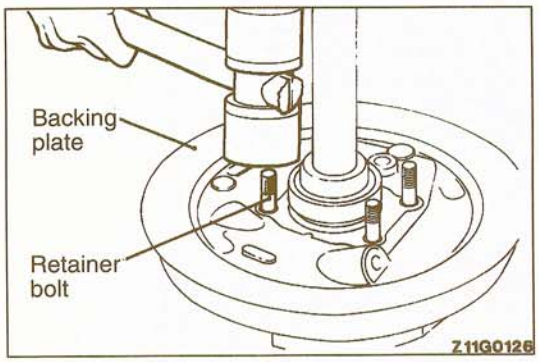


### ◀B▶ RETAINER REMOVAL

(1) Remove one retainer bolt from the backing plate.

**TSB Revision**

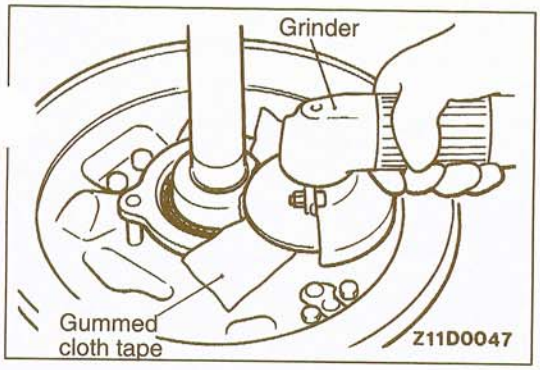


(2) Apply gummed cloth tape around the edge of the bearing case for protection.
(3) As shown in the figure, fix the axle shaft and shave off with grinder a point of its circumference locally until the wall thickness on the side of axle shaft of retainer ring and the side of bearing become approximately 1.0–2.0 mm (.04–.08 in.) and 2.0 mm (.08 in.) respectively.

**Caution**
**Be careful not to damage the bearing case and the axle shaft.**

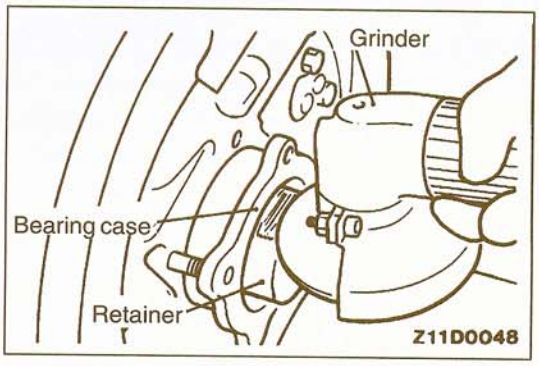


(4) Fix the axle shaft and shave off the remaining 2.0 mm (.08 in.) on the side of the bearing of the retainer.

**Caution**
**Be careful not to damage the bearing case and the axle shaft.**

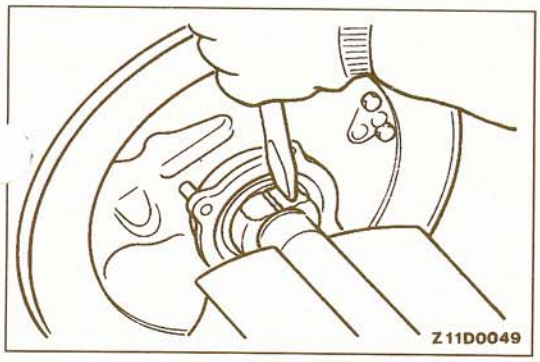


(5) Cut in with a chisel the place where the retainer ring has been shaven and remove the retainer.

**Caution**
**Be careful not to damage the axle shaft.**

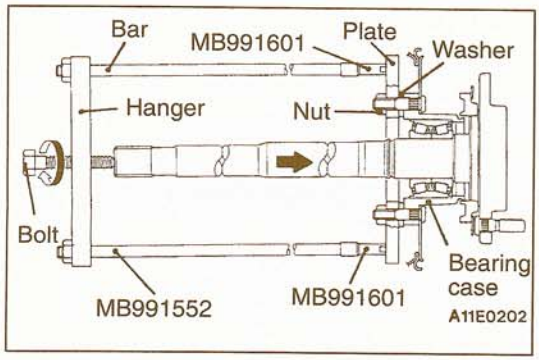


### ◀C▶ AXLE SHAFT SUB ASSEMBLY REMOVAL

(1) Adjust the height of the hanger. Then install the washers, plate and nuts in that order as shown in the figure.

NOTE
If the bar of the special tool (MB991552) is short, connect the extension bar (MB991601) to adjust the height of the hanger.

(2) Place the end of the bolt against the center of the axle shaft, and then tighten the nuts to remove the axle shaft from the bearing case assembly.

**Caution**
**The hanger and plate must be placed so that they are parallel.**

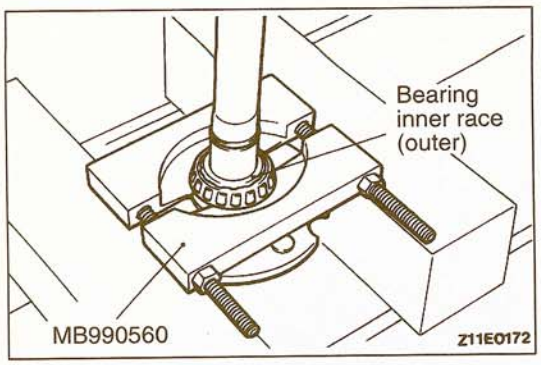


### ◀D▶ BEARING INNER RACE (OUTER) REMOVAL

Install the special tool as shown in the illustration, and then use a press to remove the bearing inner race (outer) fror the axle shaft.

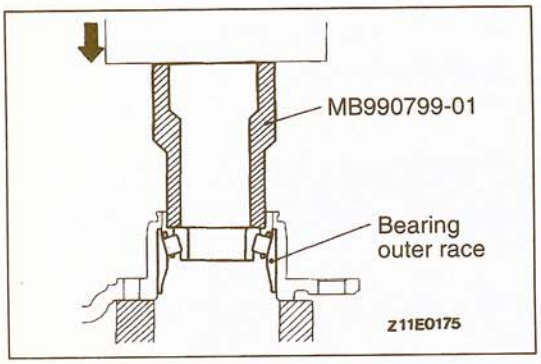


### ◀E▶ BEARING OUTER RACE REMOVAL

Reinstall the bearing inner race that was removed previously, and then use the special tool and press to remove the bearing outer race.

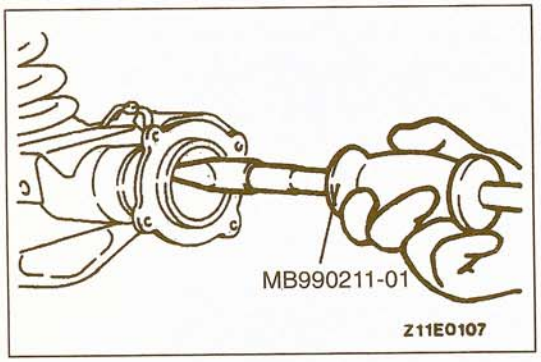


### ◀F▶ OIL SEAL REMOVAL

Remove the oil seal from the end of rear axle housing using the special tool, if necessary.

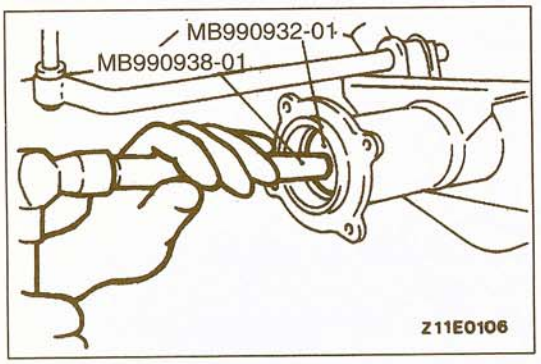


## INSTALLATION SERVICE POINTS

### ▶A◀ OIL SEAL INSTALLATION

Drive the new oil seal into the rear axle housing end by using the special tools.

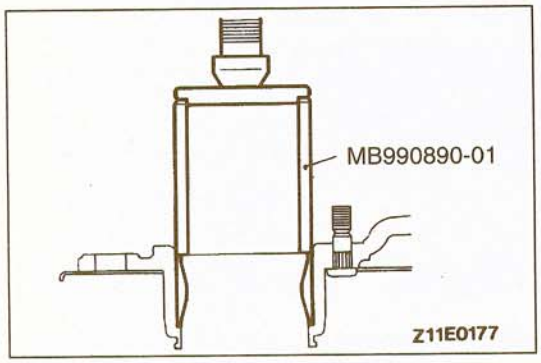


### ▶B◀ BEARING OUTER RACE INSTALLATION

(1) Apply the multi-purpose grease to the external surface of the bearing outer race.
(2) Press-fit the bearing outer race into the bearing case by using special tools.

TSB Revision

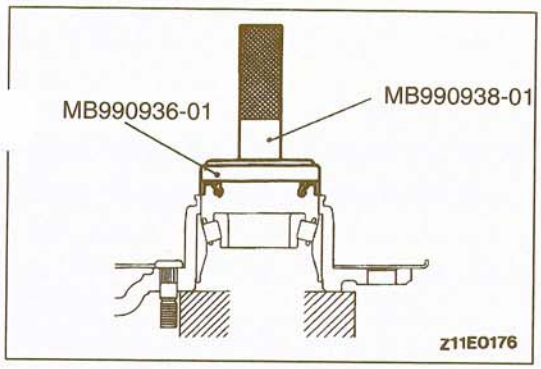


### ▶C◀ OIL SEAL INSTALLATION

(1) Apply multi-purpose grease to the outside of the oil seal.
(2) Use the special tools to press-fit the oil seal until it is flush with the end of the bearing case.
(3) Apply multi-purpose grease to the lip of the oil seal.

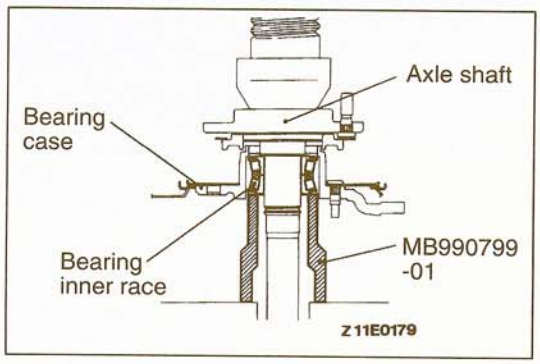


### ▶D◀ BEARING INNER RACE (INNER) INSTALLATION

(1) Pass the axle shaft through the bearing inner race, the bearing case and the second bearing inner race in that order.
(2) Use the special tool to press-fit the bearing inner race to the axle shaft.

**Caution**

1. **Both bearing inner race sets should be press-fitted together.**
2. **The left and right lengths of the axle shaft are different [approx. 7 mm (.28 in.)] in vehicles with rear differential lock. The right side is longer, so be careful when installing.**

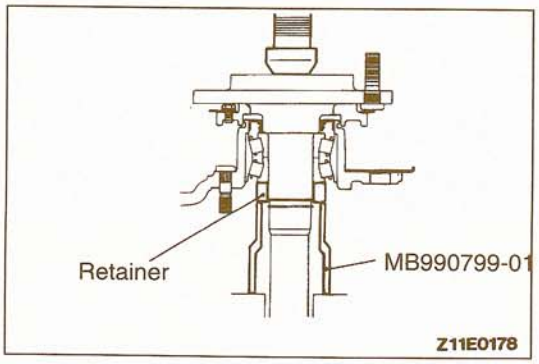


### ▶E◀ RETAINER PRESS-FITTING

Use the special tool to press-fit the retainer onto the axle shaft, while checking that the press-fitting force is at the standard value.
If the initial press-fitting force is less that the standard value, replace the axle shaft.

**Standard value:**
**Initial press-fitting force**
**49,000 N (11,016 lbs.) or more**
**Final press-fitting force**
**98,000 – 108,000 N (22,031 – 24,279 lbs.)**

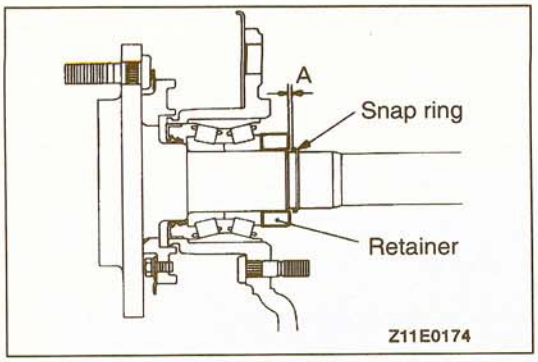


### ▶F◀ SNAP RING INSTALLATION

(1) After installing the snap ring, measure the clearance (A) between the snap ring and the retainer with a thickness gage, and check that it is within the standard values.

**Standard value (A): 0.166 mm (.0065 in.) or less**

(2) If the clearance exceeds the standard value, change the snap ring so that the clearance is at the standard value.

| Thickness of snap ring mm (in.) | Identification color |
|---|---|
| 2.17 (.0854) | – |
| 2.01 (.0791) | Yellow |
| 1.85 (.0728) | Blue |
| 1.69 (.0665) | Purple |
| 1.53 (.0602) | Red |

## INSPECTION

27100260018

- Check the dust cover for deformation or damage.
- Check the oil seal for damage.
- Check the inner and outer bearings for seizure discoloration and rough raceway surface.
- Check the axle shaft for cracks, wear and damage.

# REAR DIFFERENTIAL LOCK

27200270014

## REMOVAL AND INSTALLATION

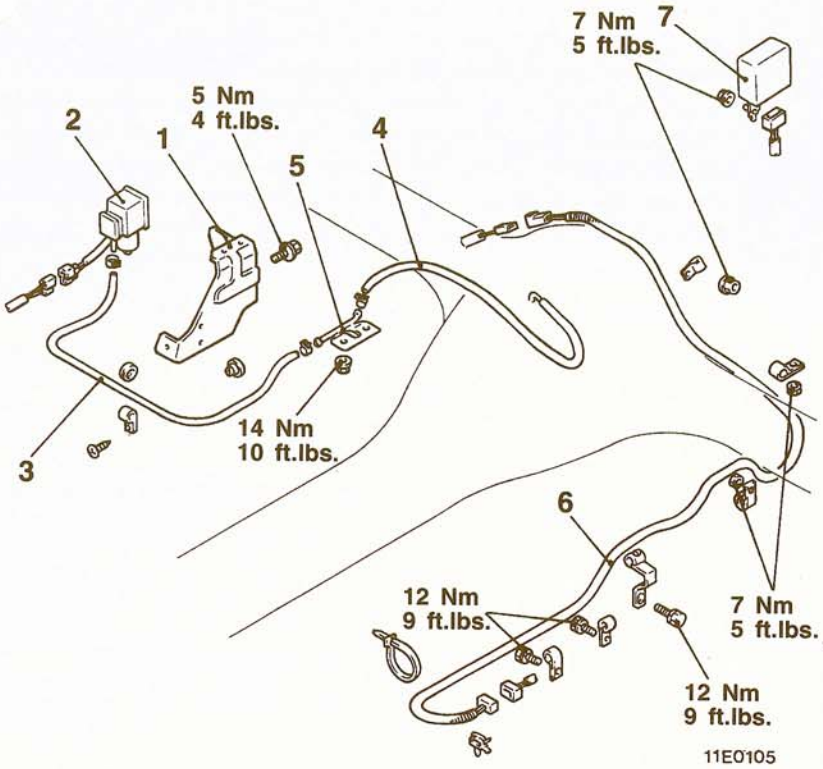


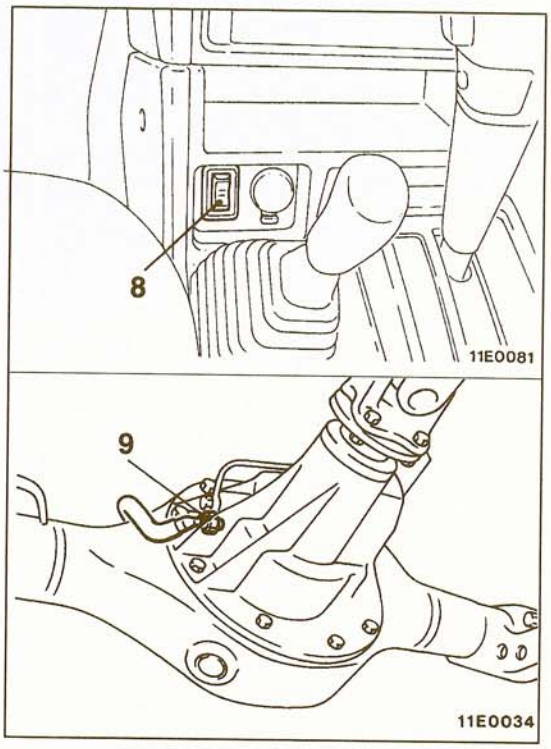


00003999

**Rear differential lock air pump and hose removal steps**

- Second Seat (Refer to GROUP 52A – Second Seat.)

1. Bracket
2. Rear differential lock air pump
3. Air hose
4. Air hose
5. Hose bracket
6. Position harness

**Rear differential lock control unit removal steps**

- Quarter trim lower <LH side> (Refer to GROUP 52A – Trims.)

7. Rear differential lock control unit

**Rear differential lock switch removal**

8. Rear differential lock switch

**Rear differential lock detection switch removal**

9. Rear differential lock detection switch (Refer to P.27-31.)

TSB Revision

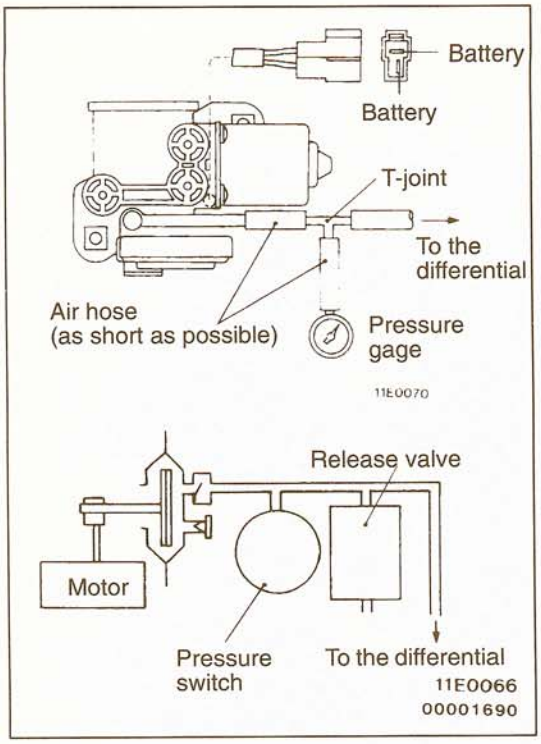


## INSPECTION

27200310013

### REAR DIFFERENTIAL LOCK AIR PUMP

1. Connect the pressure gage to the air pump discharge outlet nozzle, via the air hose and T-joint.
2. Install air hose to the differential.
3. Apply battery positive voltage to the air pump connector.
4. Measure the time between when the pump starts and stops operating, and if it stops within 5 seconds, the pressure switch inside the pump is normal.
5. Measure the pressure 10–20 seconds after the pump has stopped.

   **Standard value: 25–40 kPa (4–6 psi.)**

   If the pressure is within the standard value, the release valve inside the pump is normal.
6. Check that the pump does not begin operating for 5 minutes after it has stopped.
7. If the inspection for 4–6 is normal, then the pump is fully operational.

### REAR DIFFERENTIAL LOCK CONTROL UNIT

27200320016

1. Measure the terminal voltages under each condition.
2. With the control unit connected to the harness and the probe inserted into the rear of the harness connector, carry out the voltage measurements between terminal (6) (ground terminal) and each other terminal.

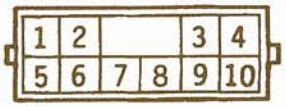


Z11E0068

| Terminal No. | Inspection Item | | Inspection Condition | | Terminal Voltage |
|---|---|---|---|---|---|
| 3 | Ignition switch (IG1) | | Ignition switch (IG1) | OFF | 0 V |
| | | | | ON | Battery positive voltage |
| 9 | Rear differential lock switch | ON side | Ignition switch: ON | ON side or OFF side | 0 V |
| 1 | | OFF side | | When in neutral | Battery positive voltage |
| 10 | Rear differential lock indicator light | | Ignition switch: ON | Rear differential is locked | 0 V |
| | | | | Rear differential is free | Battery positive voltage |
| 2 | Vehicle speed reed switch | | Select "D" or "1" (1st gear) and drive forward slowly. | | 5 V |
| 8 | Rear differential lock detection switch | | Ignition switch: ON | Rear differential is locked | 0 V |
| | | | | Rear differential is free | Battery positive voltage |
| 4 | Rear differential lock air pump | | Ignition switch: ON | When filing or holding | Battery positive voltage |
| | | | | When releasing | 0 V |
| 5 | Center differential lock operation detection switch | | Ignition switch: ON | Center differential is free | Battery positive voltage |
| | | | | Center differential is locked | 0 V |

**TSB Revision**

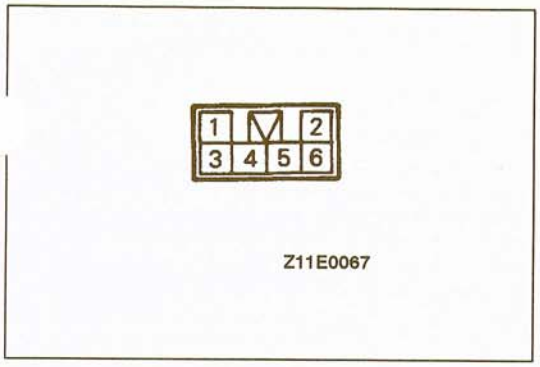


## REAR DIFFERENTIAL LOCK SWITCH CONTINUITY

27200330019

| Switch position | Terminal | | | | |
|---|---|---|---|---|---|
| | 5 | 3 | 2 | 6 | 1 |
| ON | ○ | | ○ | | |
| OFF | | ○ | ○ | | |

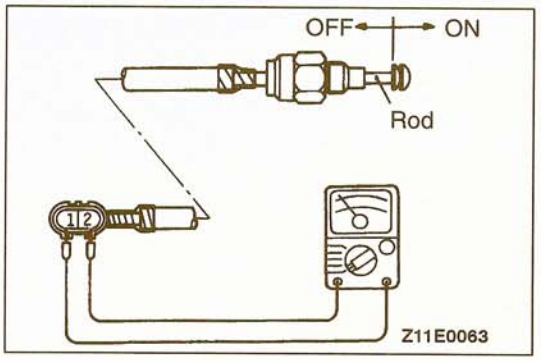


## REAR DIFFERENTIAL LOCK DETECTION SWITCH

27200100023

1. Connect an ohmmeter to the detection switch connector.
2. The rear differential lock detection switch is in good condition when the rod of the detection switch is pulled, there should be continuity, and when it is returned to its normal position, no continuity.

NOTE
Remove the differential carrier in order to replace the rear differential lock detection switch. (Refer to P.27-31.)

# DIFFERENTIAL CARRIER

27200200020

## REMOVAL AND INSTALLATION

**Pre-removal Operation**
- Differential Gear Oil Draining

**Post-installation Operation**
- Air Bleeding from Brake Lines
  (Vehicles without A.B.S.: Refer to GROUP 35A – On-vehicle Service.)
  (Vehicles with A.B.S.: Refer to GROUP 35C – On-vehicle Service.)
- Parking Brake Lever Stroke Adjustment
  (Refer to GROUP 36 – On-vehicle Service.)
- Differential Gear Oil Filling (Refer to P.27-13.)

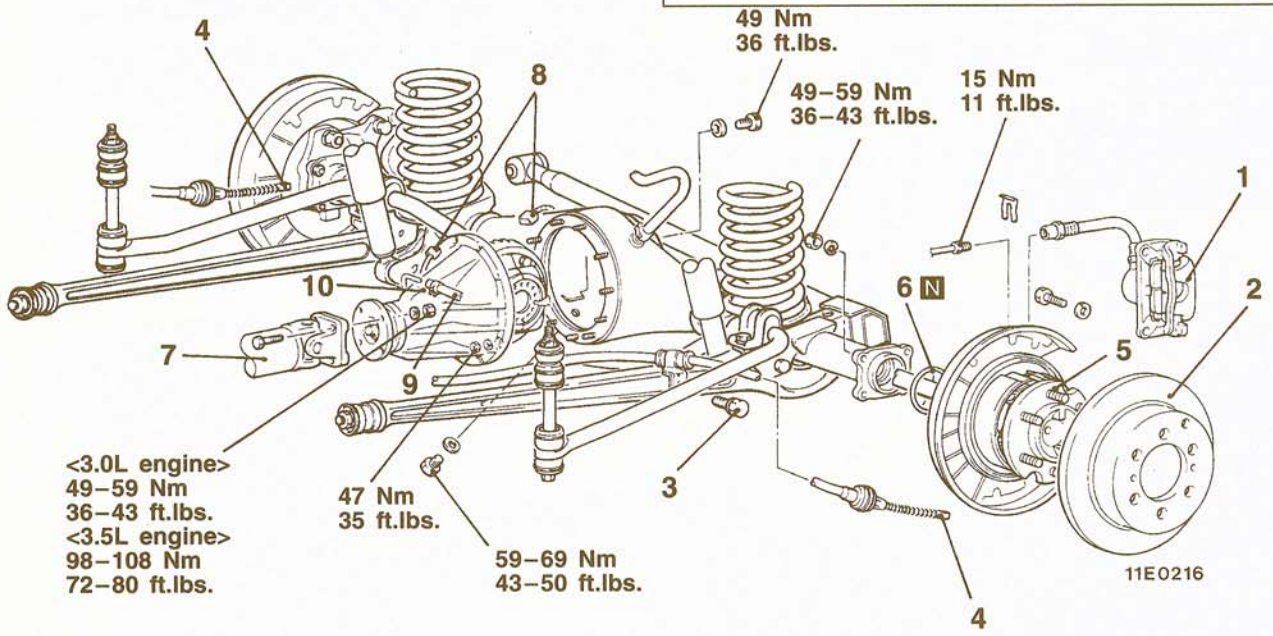


00004000

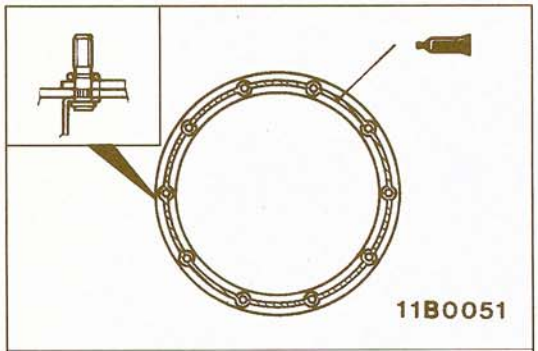


**Sealant:**
**3M ATD Part No. 8661, 8663 or equivalent**

NOTE
Apply the specified sealant to the differential carrier mounting surface of the axle housing as shown in the illustrations.

**Removal steps**

1. Rear brake assembly
2. Brake disc
3. Parking brake cable attaching bolt
4. Parking brake cable end

◀A▶ 5. Rear axle shaft assembly

6. O-ring

◀B▶ ▶A◀ 7. Rear propeller shaft

8. Rear differential lock position harness connector
9. Hose connection <Vehicles with rear differential lock>

◀C▶ 10. Differential carrier

**TSB Revision**

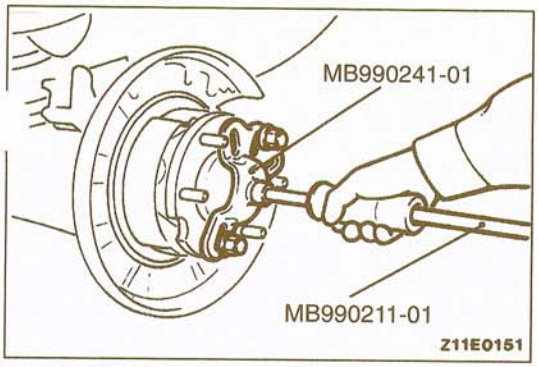


## REMOVAL SERVICE POINTS

### ◀A▶ REAR AXLE SHAFT ASSEMBLY REMOVAL

Pull out the right and left axle shafts by about 70 mm (3 in.). If it is difficult to pull out, use the special tools.

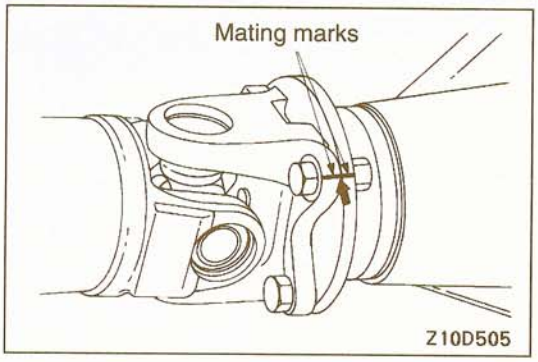


### ◀B▶ REAR PROPELLER SHAFT REMOVAL

Make the mating marks on the flange yoke of the rear propeller shaft and the companion flange of the differential case.

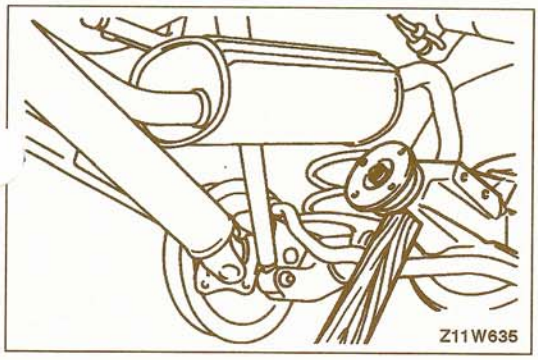


### ◀C▶ DIFFERENTIAL CARRIER REMOVAL

Remove the mounting nuts and strike the lower part of differential carrier assembly with a piece of timber several times to loosen it, and then remove the assembly.

**Caution**

1. **Do not remove the uppermost nut but keep it loosened all the way to the stud bolt end.**
2. **Use care not to strike the companion flange.**

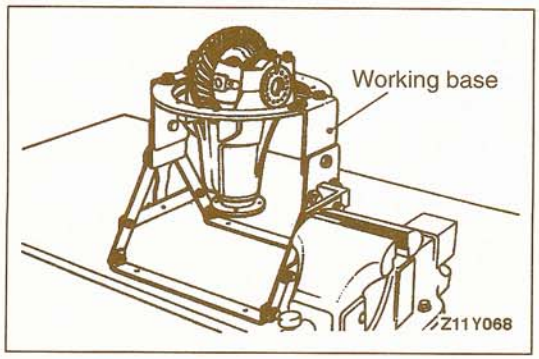


## INSTALLATION SERVICE POINT

### ▶A◀ REAR PROPELLER SHAFT INSTALLATION

Align the mating marks on the flange yoke and the companion flange to install the rear propeller shaft.

## INSPECTION BEFORE DISASSEMBLY 27200290027

Hold the working base in a vice, and install the differential carrier to the special tool.

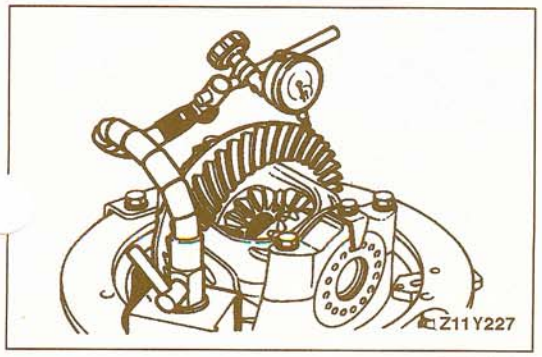


### FINAL DRIVE GEAR BACKLASH

With the drive pinion locked in place, measure the final drive gear backlash with a dial indicator on the drive gear.

NOTE
Measure at four points or more on the circumference of the drive gear.

**Standard value:**

**Except 3.5L engine with rear differential lock**
**0.13–0.18 mm (.0051–.0071 in.)**
**3.5L engine with rear differential lock**
**0.12–0.18 mm (.0047–.0071 in.)**

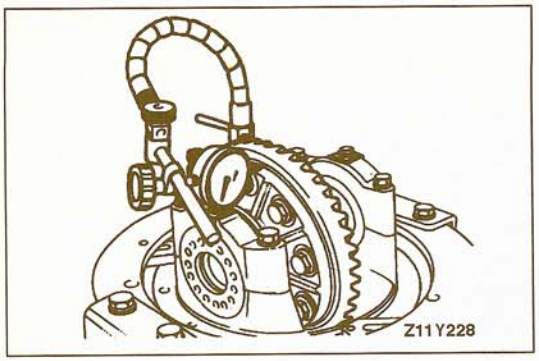


### DRIVE GEAR RUNOUT

Measure the drive gear runout at the shoulder on the reverse side of the drive gear.

**Limit: 0.05 mm (.002 in.)**

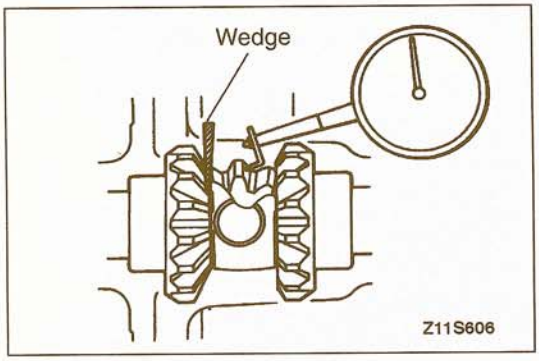


### DIFFERENTIAL GEAR BACKLASH (3.0L ENGINE WITH CONVENTIONAL DIFFERENTIAL)

While locking the side gear with the wedge, measure the differential gear backlash with a indicator on the pinion gear.

**Standard value: 0.076 mm (.0030 in.) or less**

**Limit: 0.2 mm (.0079 in.)**

### FINAL DRIVE GEAR TOOTH CONTACT

Refer to GROUP 26–Differential Carrier.

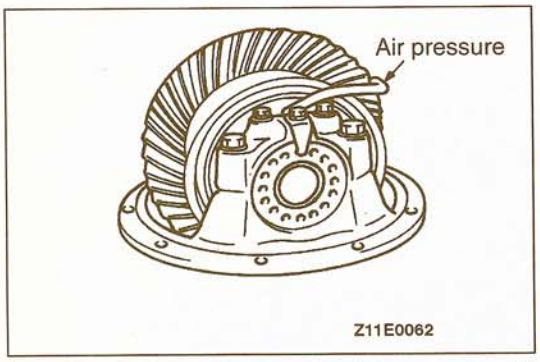


### REAR DIFFERENTIAL LOCK

1. Connect an air hose, pressure gage and air regulator, for adjusting the compressed air pressure, to the actuator pipe.
2. Adjust the compressed air pressure with the air regulat( until the pressure gage shows a pressure of approximatel, 25 kPa (4 psi.).

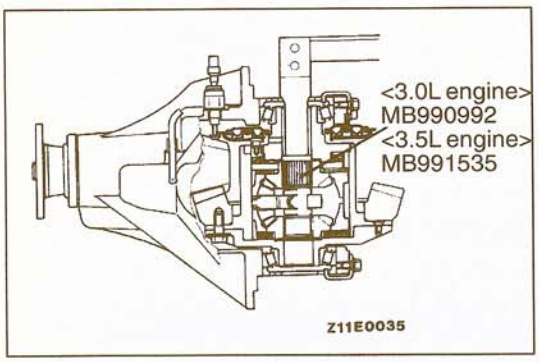


3. Use the special tool to gently turn only the side gear of one side of the axle 1/4–1/2 turns.

   NOTE
   1. The lock will not operate when both side gears turn together, even when air pressure is supplied. The side gear on one side of the axle must be turned so that the clutch will mesh (lock).
   2. To unlock, shut supply of air pressure, and gently turn the side gear on one side of the axle 1/4–1/2 turns.

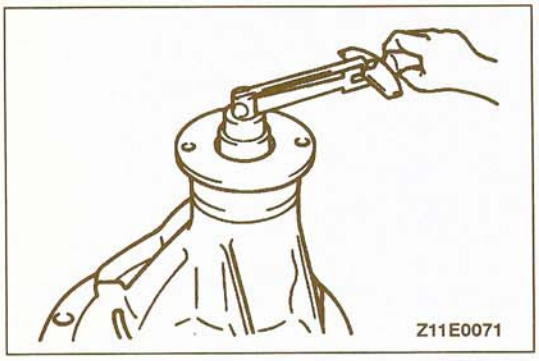


4. Measure the rotation torque of the companion flange, and check the lock condition and free condition of the rear differential.

| Rear differential operation | Companion flange Nm (ft.lbs.) [N (lbs.)] |
|---|---|
| Locked | Doesn't turn at 49 (36) [1,111 (248)] |
| Free | Turns at less than 49 (36) [1,111 (248)] |

**TSB Revision**

## DISASSEMBLY

27200220026

**Inspection Before Disassembly**
(1) Final Drive Gear Inspection (Refer to P.27-29.)
(2) Drive Gear Run-out Inspection (Refer to P.27-30.)
(3) Differential Gear Backlash Inspection (Refer to P.27-30.)
(4) Final Drive Gear Tooth Contact Inspection (Refer to P.27-30.)

<3.0L engine with conventional differential>

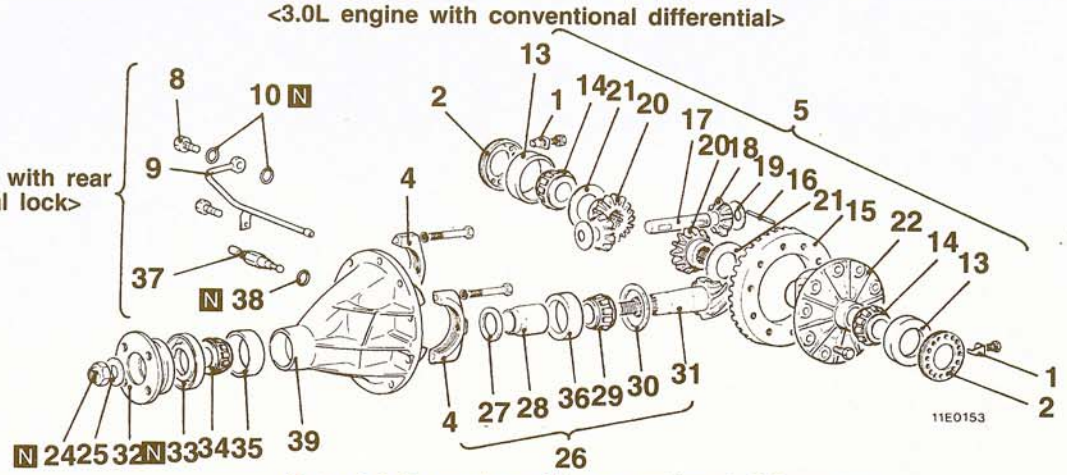


<Except 3.0L engine with conventional differential>

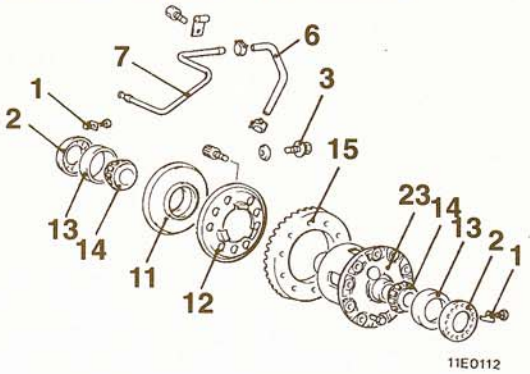


00001692

**Disassembly steps**

1. Lock plate
◀A▶ 2. Side bearing nut
3. Bolt
4. Bearing cap
◀B▶ 5. Differential case assembly
6. Hose*
7. Air pipe assembly (A)*
8. Eye bolt*
9. Air pipe assembly (B)*
10. Gasket*
11. Actuator assembly*
12. Pressure plate*
13. Side bearing outer race
◀C▶ 14. Side bearing inner race
◀D▶ 15. Drive gear
◀E▶ 16. Lock pin
17. Pinion shaft
18. Pinion gear
19. Pinion washer
20. Side gear
21. Side gear spacer
22. Differential case
23. Differential case (3.0L engine, 3.5L engine with L.S.D.: Refer to P.27-43.) (3.5L engine without L.S.D.: Refer to P.27-49.)
◀F▶ 24. Self-locking nut
25. Washer
◀G▶ 26. Drive pinion assembly
27. Drive pinion front shim (For adjusting of drive pinion bearing preload)
28. Drive pinion spacer
◀H▶ 29. Drive pinion rear bearing inner race
30. Drive pinion rear shim (For adjusting drive pinion height)
31. Drive pinion
32. Companion flange
◀I▶ 33. Oil seal
◀I▶ 34. Drive pinion front bearing inner race
◀I▶ 35. Drive pinion front bearing outer race
◀I▶ 36. Drive pinion rear bearing outer race
37. Rear differential lock detection switch*
38. Gasket*
39. Differential carrier

NOTE
*: Vehicles with rear differential lock

**TSB Revision**

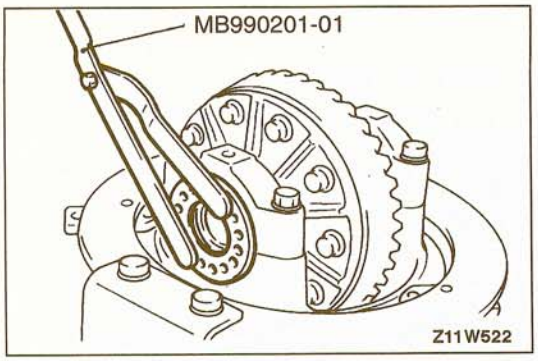


## DISASSEMBLY SERVICE POINTS

### ◀A▶ SIDE BEARING NUT REMOVAL

Use the special tool to remove the side bearing nut.

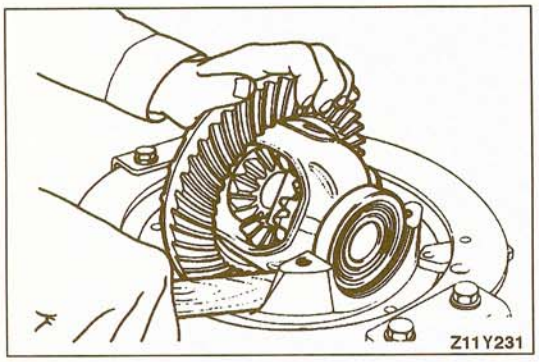


### ◀B▶ DIFFERENTIAL CASE ASSEMBLY REMOVAL

Use hammer handles to take out the differential case assembly.

NOTE
Make mating marks on the bearings.
Keep the right and left side bearings and side bearing nuts separate in order to be able to distinguish them for reassembly.

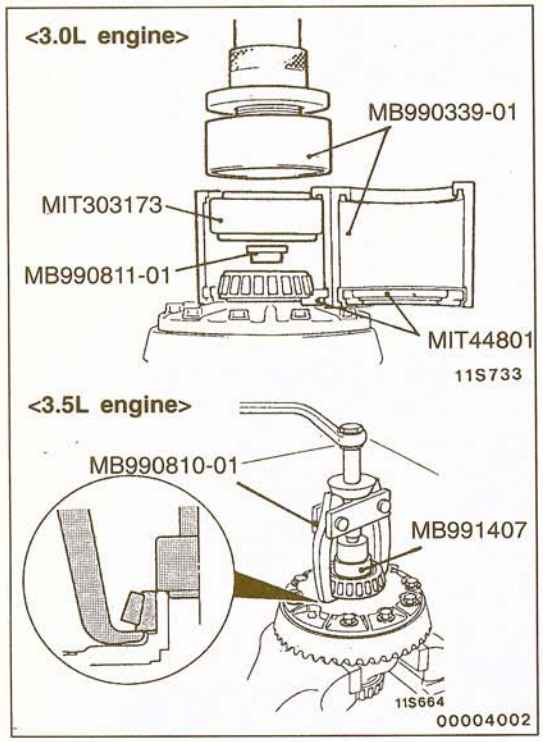


### ◀C▶ SIDE BEARING INNER RACE REMOVAL

Use the special tools to pull out the side bearing inner races.

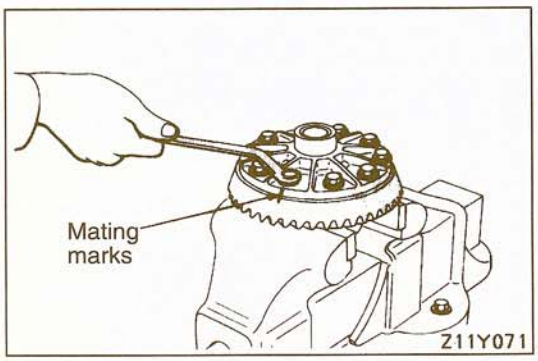


### ◀D▶ DRIVE GEAR REMOVAL

(1) Make mating marks on the differential case and drive gear.
(2) Loosen the drive gear mounting bolts in diagonal sequence to remove the drive gear.

TSB Revision

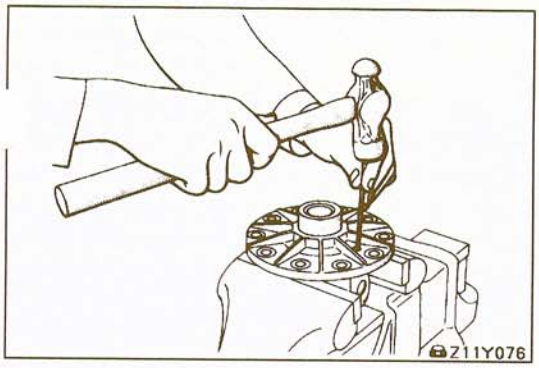


### ◀E▶ LOCK PIN REMOVAL

Drive out the lock pin with a punch.

NOTE
The location of the removed side gears and the left and right side gear thrust spacers should be made note of for reassembly.

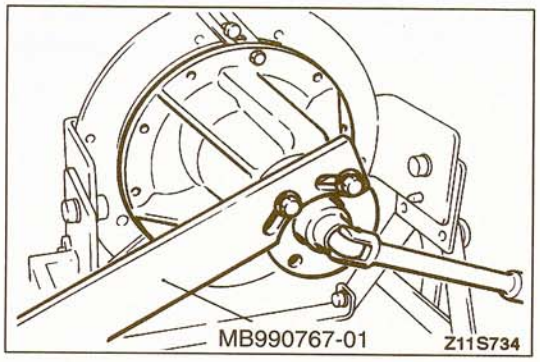


### ◀F▶ SELF-LOCKING NUT REMOVAL

Use the special tool to hold the companion flange, and then remove the companion flange self-locking nut.

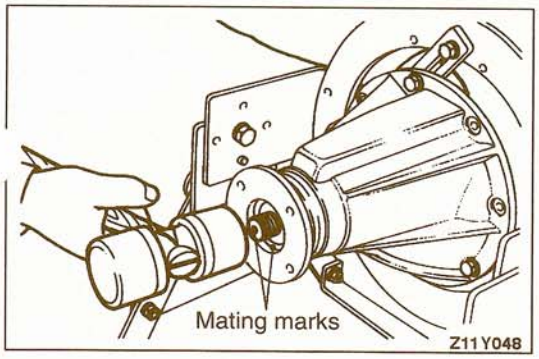


### ◀G▶ DRIVE PINION ASSEMBLY REMOVAL

(1) Make mating marks on the drive pinion and companion flange.
(2) Drive out the drive pinion together with the drive pinion spacer and the drive pinion front shims.

**Caution**
**Do not make mating marks on the contact surfaces of the companion flange and propeller shaft.**

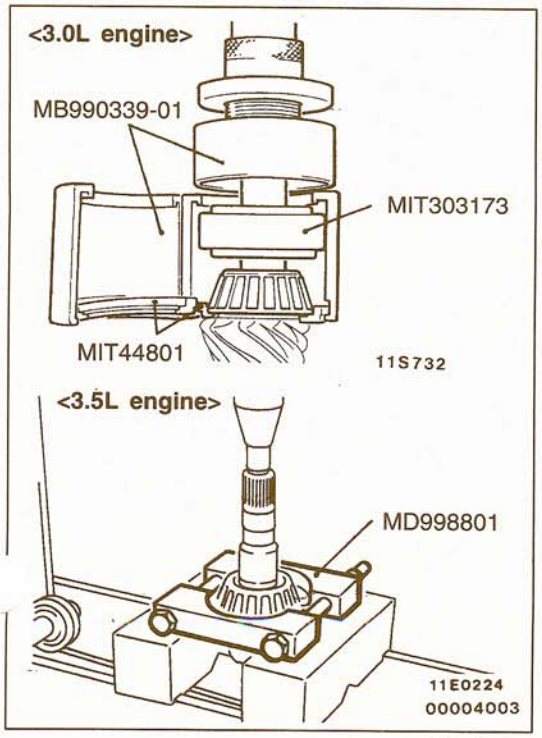


### ◀H▶ DRIVE PINION REAR BEARING INNER RACE REMOVAL

Use the special tools to pull out the drive pinion rear bearing inner race.

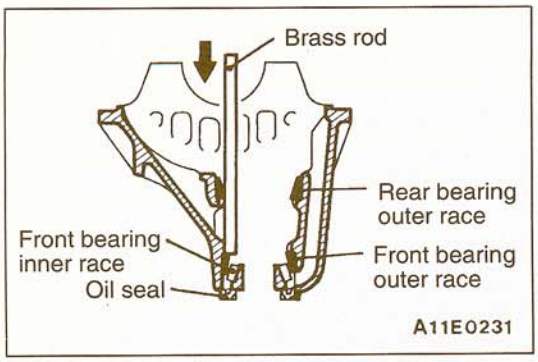


### ◀II▶ OIL SEAL/DRIVE PINION FRONT BEARING INNER RACE/DRIVE PINION FRONT BEARING OUTER RACE/DRIVE PINION REAR BEARING OUTER RACE REMOVAL

(1) Use a brass rod to drive out the drive pinion front bearing outer race from the gear carrier together with the drive pinion front bearing inner race and the oil seal.
(2) Drive out the drive pinion rear bearing outer race in the same manner.

## INSPECTION

27200300010

Wash the disassembled parts in cleaning solvent, dry them using compressed air, and then check the following areas.

- Check the companion flange for wear or damage.
- Check the oil seal for wear or deterioration.
- Check the bearings for wear or discoloration.
- Check the differential case for cracks.
- Check the drive pinion and drive gear for wear or cracks.
- Check the side gears, pinion gears and pinion shaft for wear or damage. <3.0L engine with conventional type>
- Check the side gear spline for wear or damage. <3.0L engine with conventional type>

## REASSEMBLY

27200230029

<3.0L engine with conventional differential>

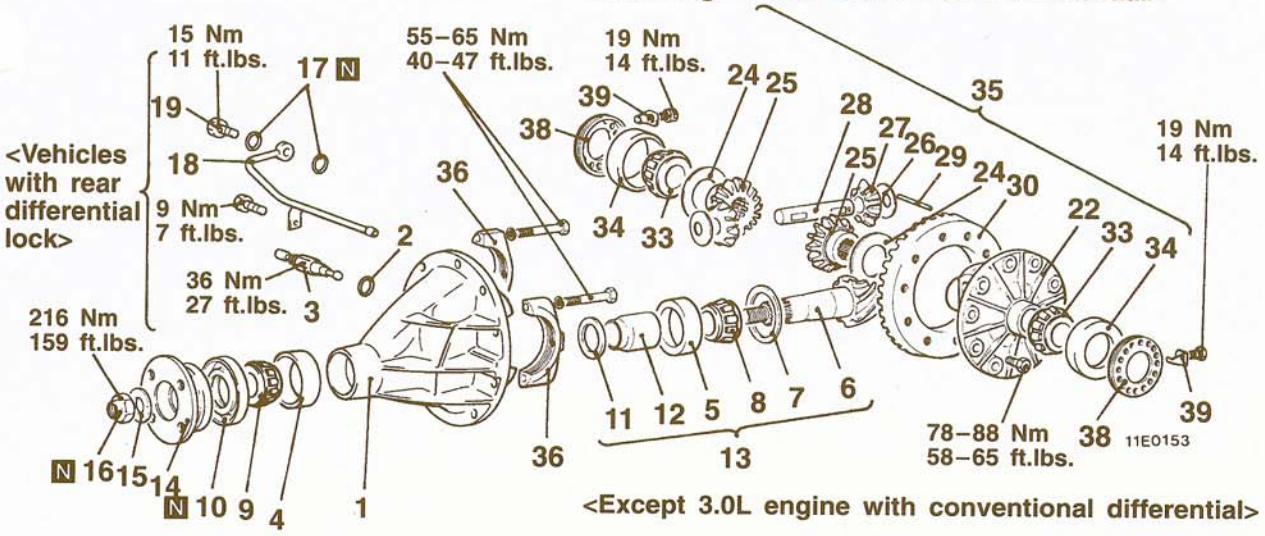


<Except 3.0L engine with conventional differential>

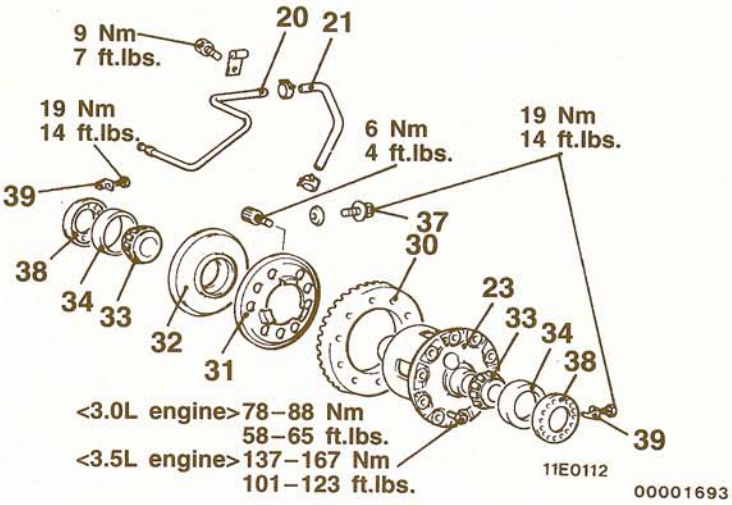


00001693

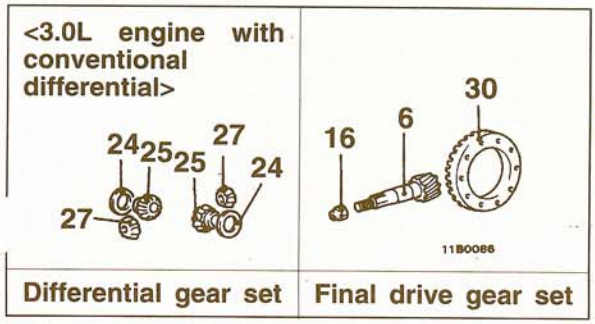


### Reassembly steps

1. Differential carrier
2. Gasket
3. Rear differential lock detection switch
- ▶A◀ 4. Drive pinion front bearing outer race
- ▶B◀ 5. Drive pinion rear bearing outer race
- ▶C◀ • Drive pinion height adjustment
6. Drive pinion
7. Drive pinion rear shim (For adjusting drive pinion height)
8. Drive pinion rear bearing inner race
9. Drive pinion front bearing inner race
10. Oil seal
11. Drive pinion front shim (For adjusting drive pinion bearing preload)
12. Drive pinion spacer
- ▶D◀ • Drive pinion bearing preload adjustment
13. Drive pinion assembly
14. Companion flange
15. Washer
16. Self-locking nut
17. Gasket
18. Air pipe assembly (B)
19. Eye bolt
20. Air pipe assembly (A)*
21. Hose*
22. Differential case
23. Differential case
24. Side gear spacer
25. Side gear
26. Pinion washer
27. Pinion gear
- ▶E◀ • Differential gear backlash adjustment
28. Pinion shaft
- ▶F◀ 29. Lock pin
- ▶G◀ 30. Drive gear
31. Pressure plate*
32. Actuator assembly*
- ▶H◀ 33. Side bearing inner race
34. Side bearing outer race
35. Differential case assembly
- ▶I◀ 36. Bearing cap
- ▶J◀ • Final drive gear backlash adjustment
37. Bolt
38. Side bearing nut
39. Lock plate

NOTE
* : Vehicles with rear differential lock.

TSB Revision

## LUBRICATION SEALING AND ADHESION POINTS

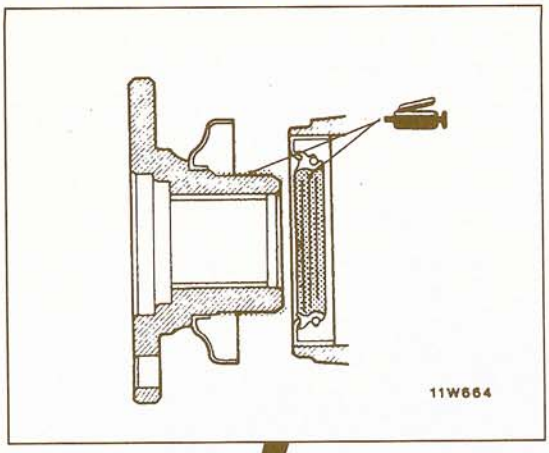


<3.0L engine with conventional differential>

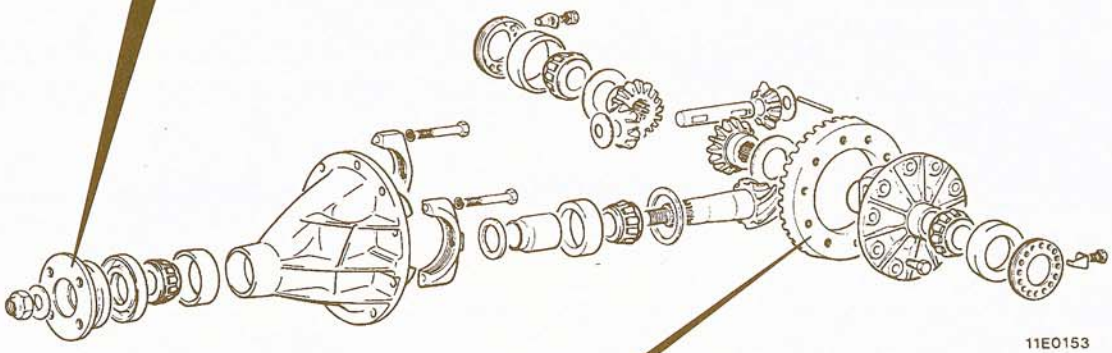


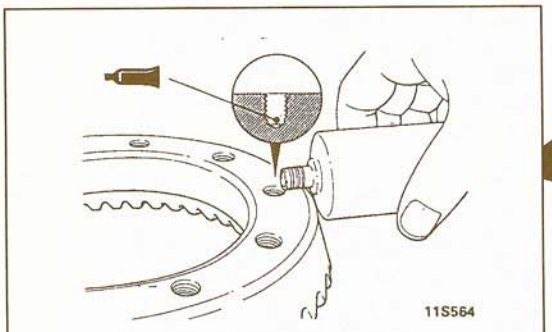


**Adhesive:**
**3M Stud Locking 4170 or equivalent**

<Except 3.0L engine with conventional differential>

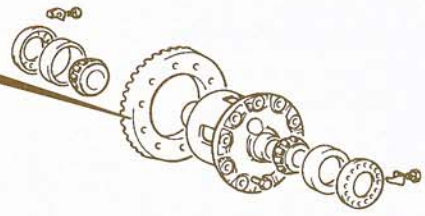


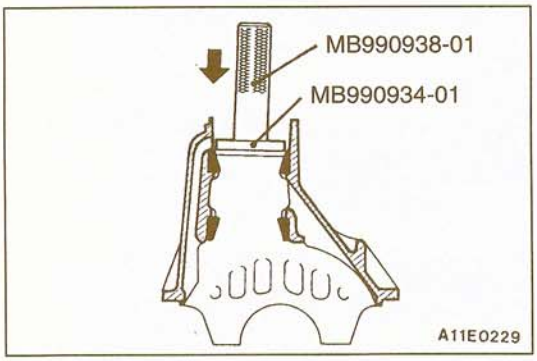


## REASSEMBLY SERVICE POINTS

### ▶A◀ DRIVE PINION FRONT BEARING OUTER RACE INSTALLATION

Use the special tools to press-fit the drive pinion front bearing outer race into the gear carrier.

**Caution**
**The bearing outer race must be fitted using a press to avoid tilt and distortion.**

**TSB Revision**

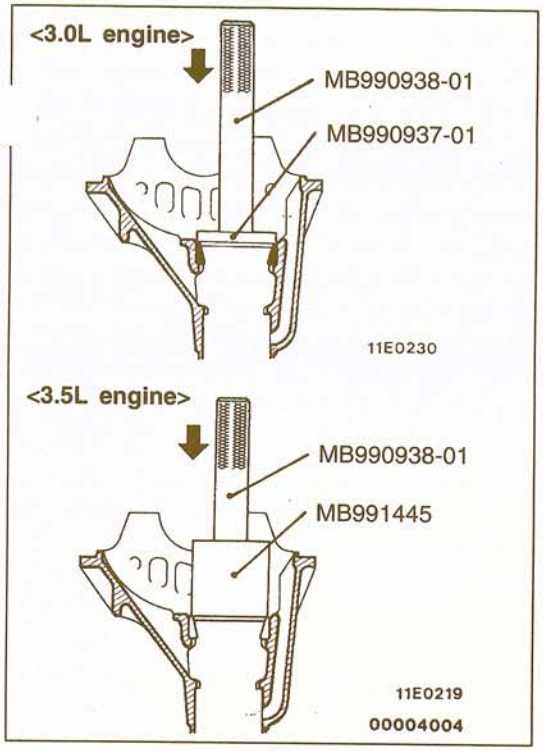


### ▶B◀ DRIVE PINION REAR BEARING OUTER RACE INSTALLATION

Use the special tools to press-fit the drive pinion rear bearing outer race into the gear carrier.

**Caution**
**The bearing outer race must be fitted using a press to avoid tilt and distortion.**

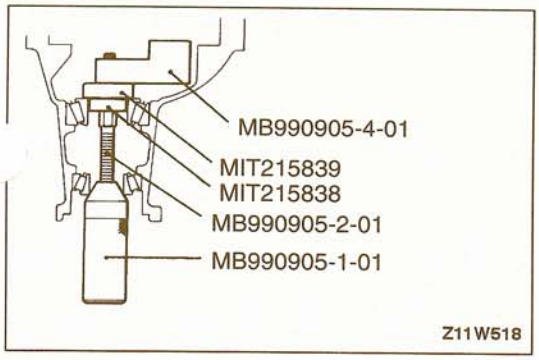


### ▶C◀ DRIVE PINION HEIGHT ADJUSTMENT

Adjust the drive pinion height by the following procedure.
(1) Install the special tools and the drive pinion front and rear bearing inner races into the gear carrier in the order shown in the illustration.
(2) Tighten the handle of the special tool until the standard value for the drive pinion rotation torque is obtained.

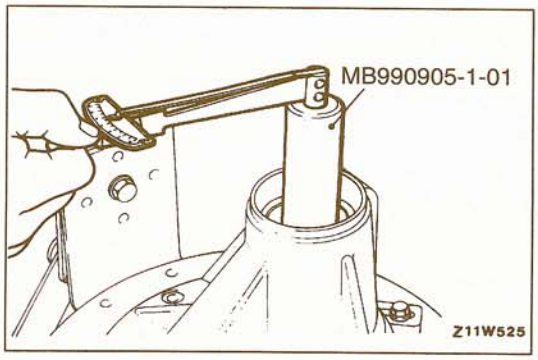


(3) Measure the drive pinion rotation torque (without oil seal).

**Standard value:**

| Bearing division | Bearing lubrication | Rotation torque |
|---|---|---|
| New | None (With anti-rust agent) | 0.6–0.9 Nm<br>5.2–7.8 in.lbs. |
| New/reused | Gear oil applied | 0.4–0.5 Nm<br>3.5–4.3 in.lbs. |

NOTE
1. Gradually tighten the handle of the special tool while checking the drive pinion rotation torque.
2. The one rotation cannot be made when the special tool is in contact with the gear carrier. So move it a few times and, after seating the bearing, measure the rotation torque.

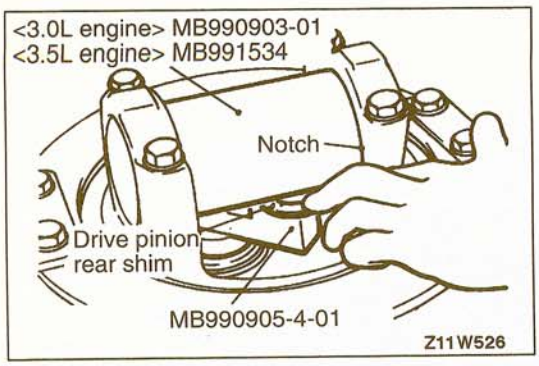


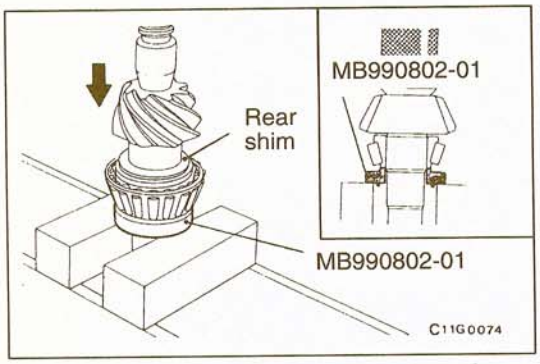


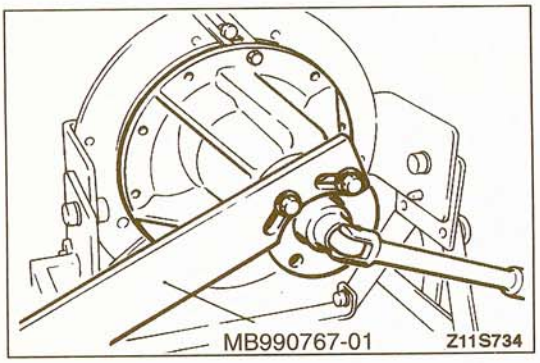


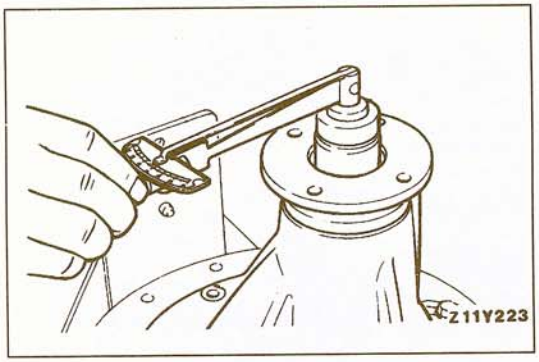


(4) Position the special tool in the side bearing seat of the gear carrier, and then select a drive pinion rear shim of a thickness which corresponds to the gap between the special tools.

NOTE
1. Be sure to clean the side bearing seat thoroughly. When positioning the special tool, check that the cut-out sections of the special tool are in the position shown in the illustration, and also check that the special tool is in close contact with the side bearing seat.
2. When selecting the drive pinion front shims, keep the number of shims to a minimum.

(5) Fit the selected drive pinion rear shim(s) to the drive pinion, and then use the special tool to press-fit the drive pinion rear bearing inner race.

### ▶D◀ DRIVE PINION BEARING PRELOAD ADJUSTMENT

Adjust the drive pinion rotation torque by using the following procedure:

**Without oil seal**

(1) Insert the drive pinion front shim(s) between the drive pinion spacer and the drive pinion rear bearing inner race.

(2) Use the special tools to tighten the companion flange to the specified torque.

NOTE
Do not install the oil seal.

(3) Measure the drive pinion rotation torque (without the oil seal).

**Standard value:**

| Bearing division | Bearing lubrication | Rotation torque |
|---|---|---|
| New | None (With anti-rust agent) | 0.6–0.9 Nm<br>5.2–7.8 in.lbs. |
| New/reused | Gear oil applied | 0.4–0.5 Nm<br>3.5–4.3 in.lbs. |

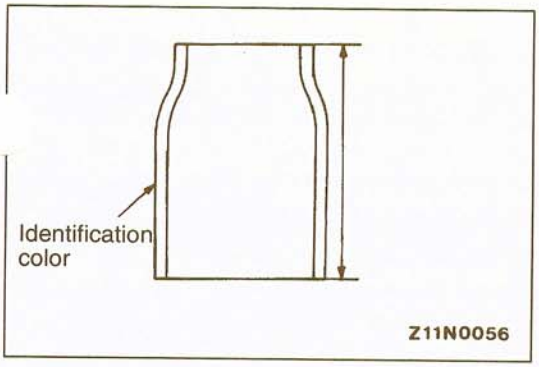


(4) If the drive pinion rotation torque is not within the standard value range, adjust the rotation torque by replacing the drive pinion front shim(s) or the drive pinion spacer.

NOTE
When selecting the drive pinion front shims, if the number of shims is large, reduce the number of shims to a minimum by selecting the appropriate drive pinion spacers. Also, select the drive pinion spacer from the following two types.

| Height of drive pinion spacer mm (in.) | | Identification color |
|---|---|---|
| 3.0L engine | 56.67 (2.231) | – |
| | 57.01 (2.244) | White |
| 3.5L engine | 52.50 (2.067) | Yellow |
| | 52.84 (2.080) | Red |

(5) Remove the companion flange and drive pinion again.

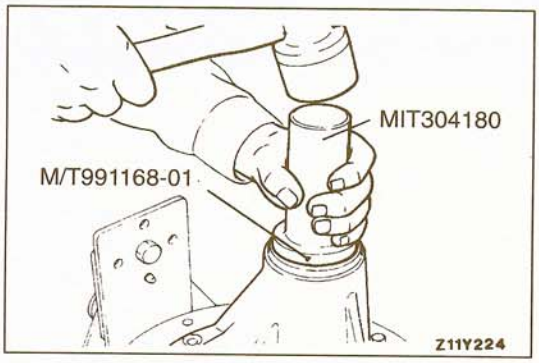


**With oil seal**

(1) After setting the drive pinion front bearing inner race, use the special tool to drive the oil seal into the front lip of the gear carrier.

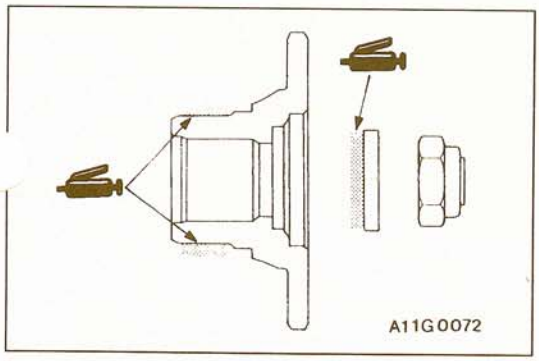


(2) Apply a thin coat of clean multi-purpose grease to the companion flange contact surfaces of the washer and the oil seal contacting surface before installing the drive pinion assembly.

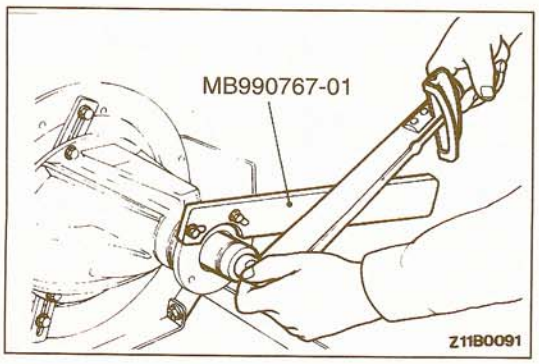


(3) Install the drive pinion assembly and companion flange with the mating marks properly aligned, and then use the special tools to tighten the companion flange self-locking nut to the specified torque.

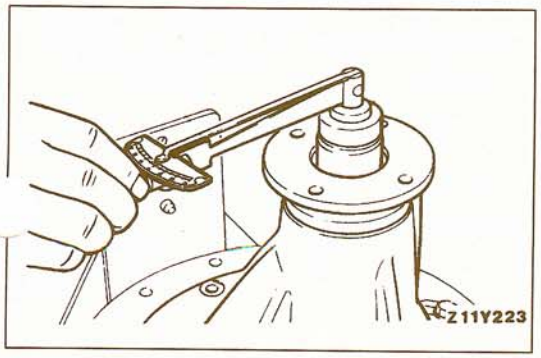


(4) If the drive pinion rotation torque is not within the rage of the standard value, adjust the rotation torque by replacing the drive pinion front shim(s) or the drive pinion spacer.

**Standard value:**

| Bearing division | Bearing lubrication | Rotation torque |
|---|---|---|
| New | None (With anti-rust agent) | 0.85–1.15 Nm<br>7.4–10.0 in.lbs. |
| New/reused | Gear oil applied | 0.65–0.75 Nm<br>5.6–6.5 in.lbs. |

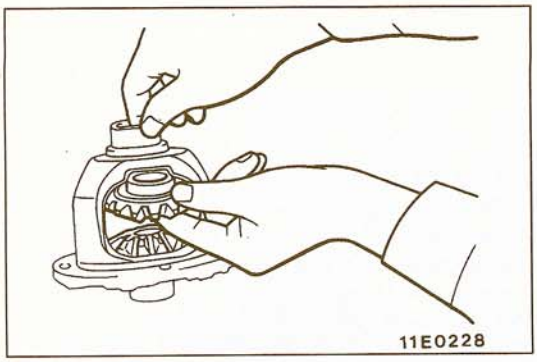


## ▶E◀ DIFFERENTIAL GEAR BACKLASH ADJUSTMENT

Adjust the differential gear backlash by the following procedure.

(1) Assemble the side gears, side gear thrust spacers, pinion gears and pinion washers into the differential case.
(2) Provisionally install the pinion shaft.

NOTE
Do not assemble the thrust block and lock pin yet.

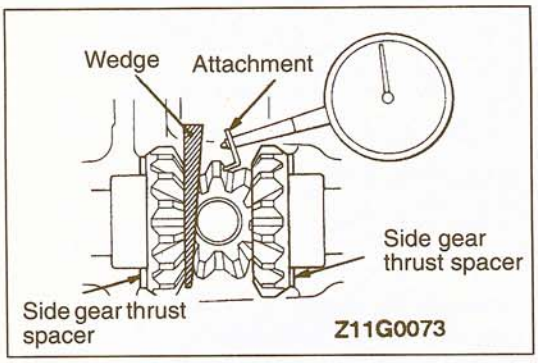


(3) Insert a wedge between the side gear and the pinion shaft to lock the side gear.
(4) While locking the side gear with a wedge, use a dial indicator to measure the differential gear backlash on the pinion gear.

**Standard value: 0.076 mm (.0030 in.) or less**

**Limit: 0.2 mm (.0079 in.)**

NOTE
Measure both pinion gears.

(5) If the differential gear backlash exceeds the limit, adjust the backlash by installing thicker side gear thrust spacers on both sides.
(6) Measure the differential gear backlash again, and check that it is within the limit.
If adjustment is not possible, replace the side gears and pinion gears as a set.

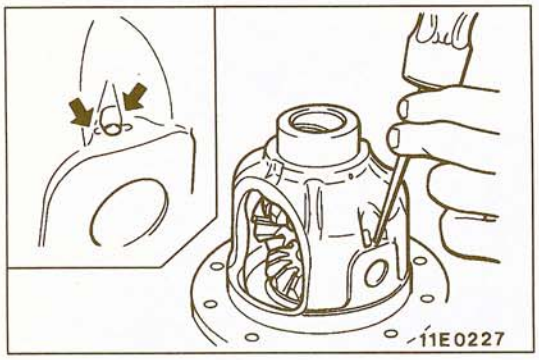


## ▶F◀ LOCK PIN INSTALLATION

(1) Align the pinion shaft lock pin hole with the differential case lock pin hole, and then drive in the lock pin.
(2) Stake the lock pin with a punch at two points.

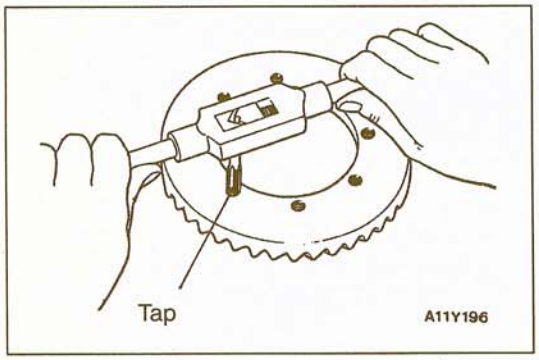


## ▶G◀ DRIVE GEAR INSTALLATION

(1) Clean the drive gear mounting bolts.
(2) Remove the adhesive which is adhering to the threaded holes of the drive gear by turning the tap tool (M10 × 1.25 <3.0L engine>, M12 × 1.25 <3.5L engine>), and then clean the threaded holes by applying compressed air.

**TSB Revision**

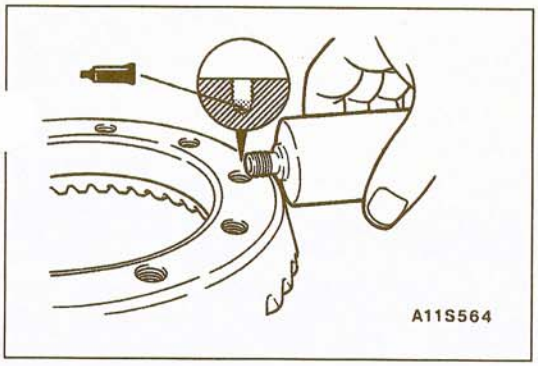


(3) Apply specified adhesive to the threaded holes of the drive gear.

**Specified adhesive:**
**3M Stud Locking Part No. 4170 or equivalent**

(4) Install the drive gear to the differential case so that the mating marks are properly aligned. Tighten the bolts to the specified torque in a diagonal sequence.

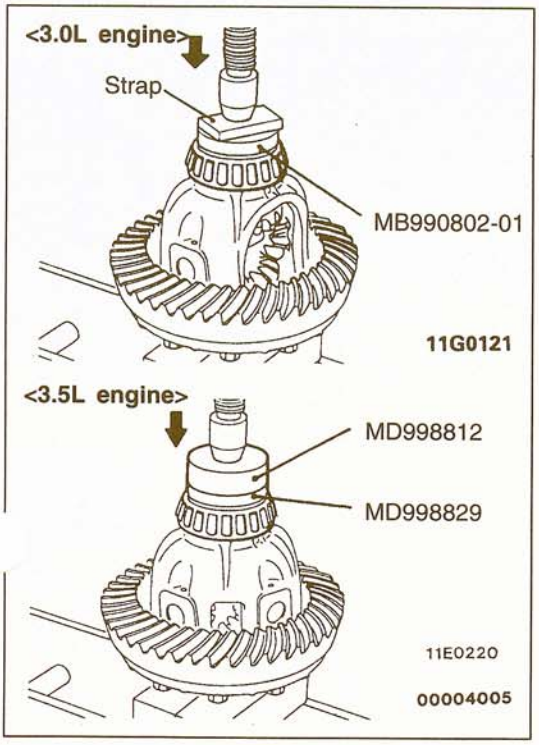


### ▶H◀ SIDE BEARING INNER RACE INSTALLATION

Use the special tool to press-fit the side bearing inner races into the differential case.

**Caution**
**When only one side bearing inner race is installed, place a load on the differential case only.**

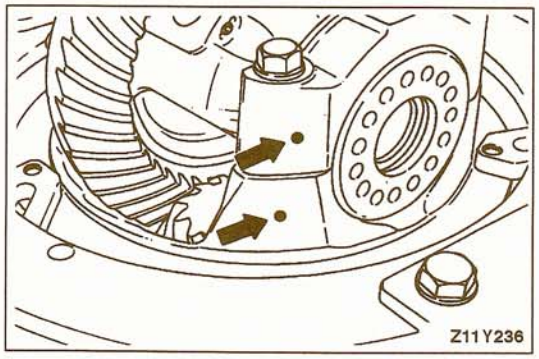


### ▶I◀ BEARING CAP INSTALLATION

Align the mating marks on the gear carrier and the bearing cap, and then tighten the bearing cap.

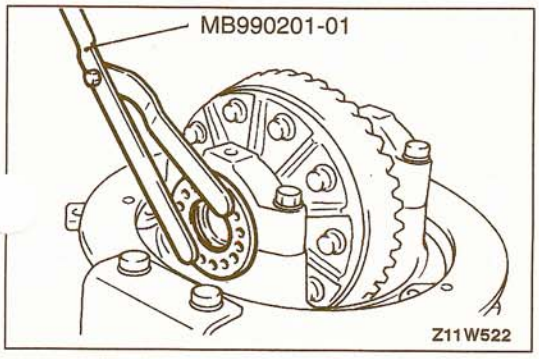


### ▶J◀ FINAL DRIVE GEAR BACKLASH ADJUSTMENT

Adjust the final drive gear backlash by the following procedure.

(1) Use the special tool to provisionally tighten the side bearing nut until it is in the state just before preloading of the side bearing.

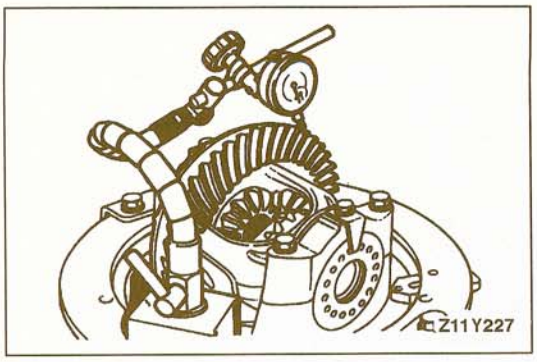


(2) Measure the final drive gear backlash.

**Standard value:**
**Except 3.5L engine with rear differential lock**
**0.13–0.18 mm (.0051–.0071 in)**
**3.5L engine with rear differential lock**
**0.12–0.18 mm (.0047–.0071 in)**

NOTE
Measure at four points or more on the circumference of the drive gear.

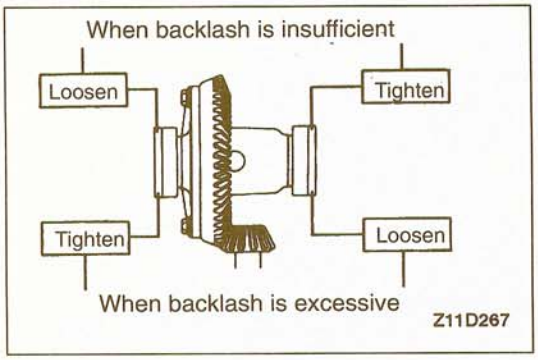


(3) Use the special tool (MB990201) to adjust the backlash to the standard value by moving the side bearing nut as shown.

NOTE
First turn the side bearing nut for loosening, and then turn the side bearing nut for tightening by the same amount.

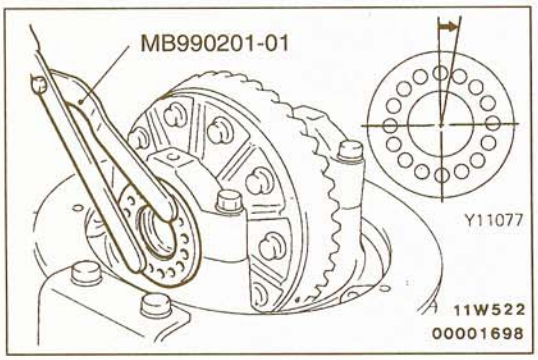


(4) Use the special tool to turn both right and left side bearing nuts one half the distance between the centers of two neighboring holes to apply the preload.

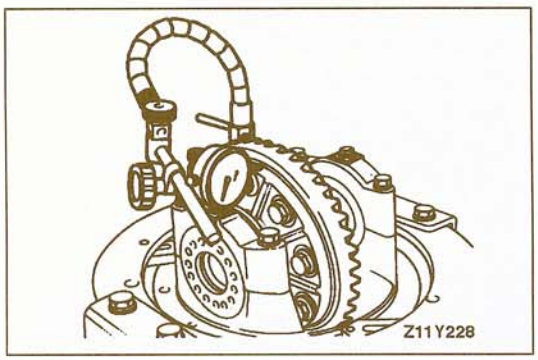


(5) Measure the drive gear runout.

**Limit: 0.05 mm (.0020 in.)**

(6) If the drive gear runout exceeds the limit, remove the differential case and the drive gears, move them to different positions and then reinstall them.

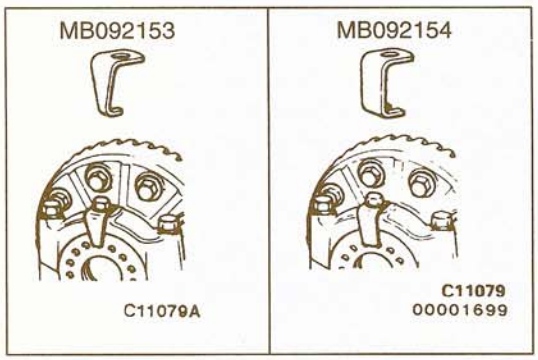


(7) Choose and install the lock plates (two types).
(8) Check the final drive gear tooth contact. If poor contact is evident, carry out adjustment. (Refer to GROUP 26–Differential Carrier.)

**TSB Revision**

## DIFFERENTIAL CASE
## <3.0L engine, 3.5L engine with limited slip differential>

27200240015

### DISASSEMBLY AND REASSEMBLY

**Gear oil:**
**MITSUBISHI Genuine Gear Oil Part No. 8149630EX or equivalent**

**Caution**
**Apply the specified gear oil to each component; especially be careful to coat contact surfaces and sliding surfaces.**

<Vehicles with limited slip differential>

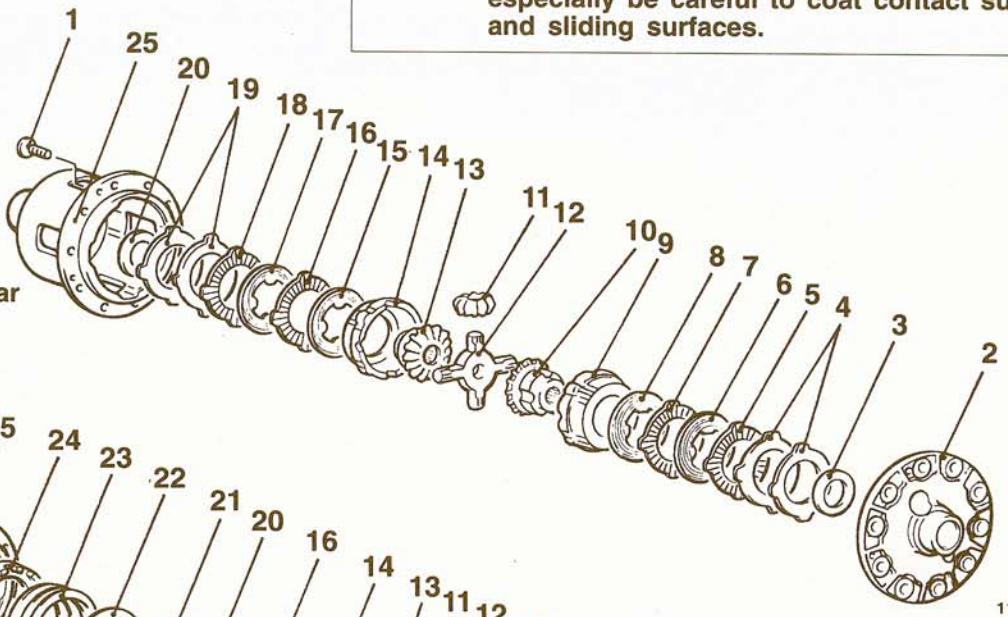


<Vehicles with rear differential lock>

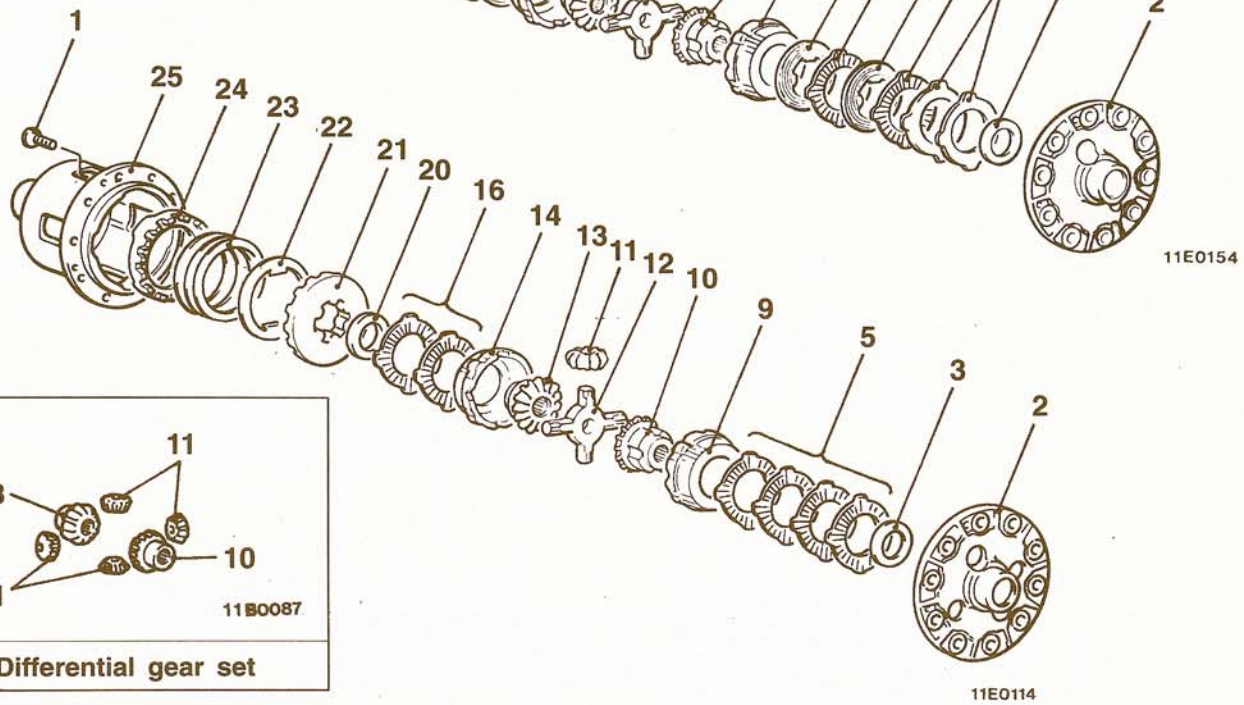


11E0154




Differential gear set

11E0114

00001700

**Disassembly steps**

◀A▶ ▶B◀ 1. Screw
2. Differential case (A)
3. Thrust washer
4. Spring plate
5. Friction plate
6. Friction disc
7. Friction plate
8. Friction disc
9. Pressure ring
10. Side gear
11. Differential pinion gear
12. Differential pinion shaft
13. Side gear
14. Pressure ring
15. Friction disc
16. Friction plate
17. Friction disc
18. Friction plate
19. Spring plate
20. Thrust washer
21. Driven cam
22. Spring washer
23. Spring
24. Drive cam

▶A◀ • Clutch plate friction force adjustment

25. Differential case (B)

**TSB Revision**

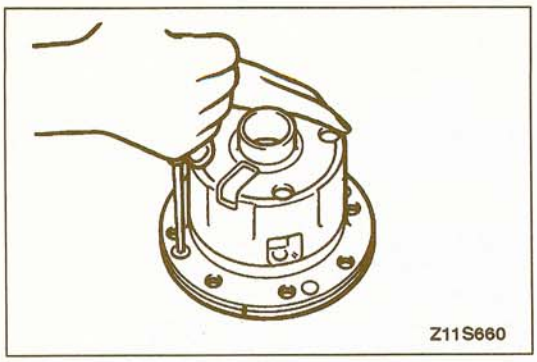
Z11S660

## DISASSEMBLY SERVICE POINT

### ◀A▶ SCREW REMOVAL

(1) Loosen the screws of the differential cases (A) and (F uniformly a little at a time.
(2) Separate differential case (A) from differential case (B).
(3) Remove the components from differential case (B).

NOTE
Keep the right and left thrust washers, spring plates, spring discs, friction plates and friction discs separate in order to be able to distinguish them for reassembly.

## REASSEMBLY SERVICE POINTS

### ▶A◀ CLUTCH PLATE FRICTION FORCE ADJUSTMENT

Before assembly, use the following method to adjust the clearance between the spring plates and the differential cases (for adjustment of the clutch plate friction force), and to adjust the end play of the side gear when installing the internal components into the differential case.

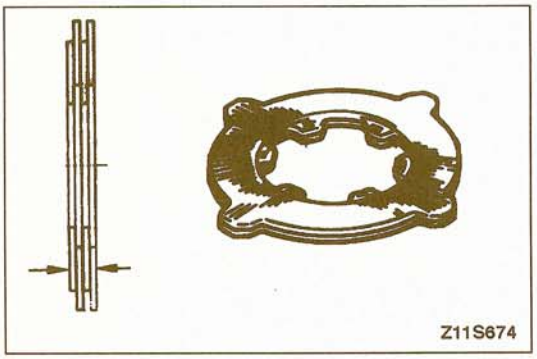
Z11S674

(1) Arrange the two friction discs and friction plates for each side one on top of the other as shown in the illustration, so that the difference in thickness between the left and right is at the standard value.

**Standard value: 0.05 mm (.0020 in.) or less**

NOTE
For new parts, there is one type of friction plate [1.75 mm (.0689 in.)] and two types of friction disc [1.75 mm (.0689 in.) and 1.85 mm (.0728 in.)].

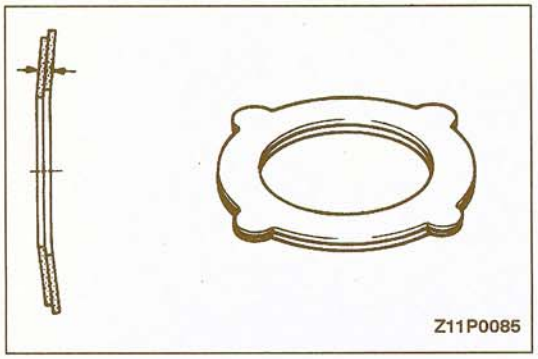
Z11P0085

(2) Arrange the two spring plates for each side one on top of the other as shown in the illustration, so that the difference between the left and right thicknesses is minimized.

NOTE
For new parts, there is one type of spring disc and spring plate [1.75 mm (.0689 in.)].

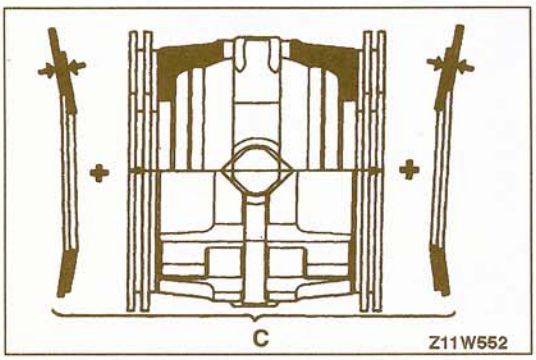

Z11W552

(3) Assemble the pressure ring's internal components (different pinion shaft and pressure ring) and the friction discs and friction plates, and then measure the overall width as shown in the illustration.
(4) Calculate the total value (C) of the thickness of the two sets of spring plates plus the value measured in (3) above.

**TSB Revision**

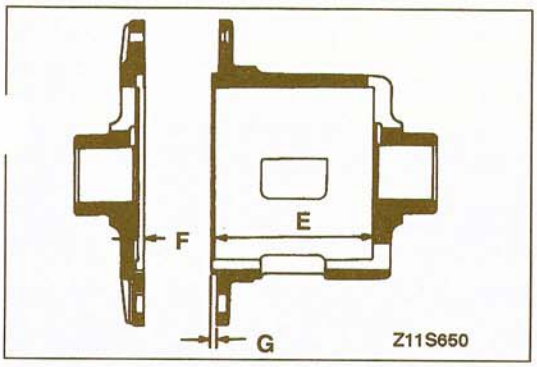


(5) Obtain the dimension (D) between the spring plate contact surfaces when differential cases (A) and (B) are combined.
(D=E+F–G)

(6) Change the thickness of the friction disc so that the clearance (D–C) between the differential case and the spring plate (vehicles with limited slip differential) or friction disc (vehicles with rear differential lock) is at the standard value.

**Standard value:**
**<Vehicles with limited slip differential>**
**0.06–0.20 mm (.0024–.0079 in.)**
**<Vehicles with rear differential lock>**
**0.05–0.20 mm (.0020–.0079 in.)**

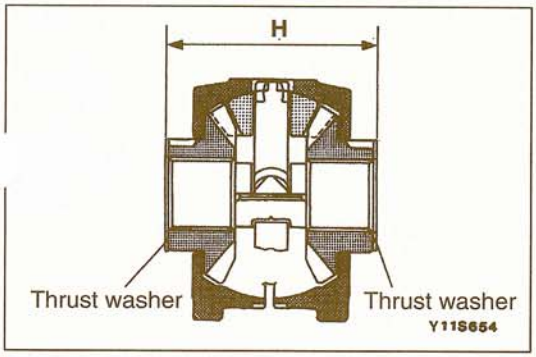


(7) Remove the spring plates, spring discs, friction plates and friction disc.

(8) Measure the dimension (H) from one end of the thrust washer to the other end.

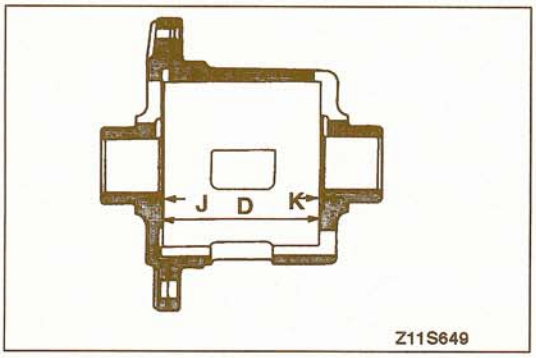


(9) Calculate the dimension (I) between the thrust washer contact surfaces when differential cases (A) and (B) are combined.
(I=D+J+K)

NOTE
Dimension (D) is the distance between the spring plate contact surfaces when differential cases (A) and (B) are combined.

(10) Change the thickness of the thrust washer so that the clearance (I–H) between the thrust washer and the differential case is at the standard value.

**Standard value: 0.05–0.20 mm (.0020–.0079 in.)**

NOTE
There are three sizes of new thrust washers: 1.50 mm (.0591 in.), 1.60 mm (.0630 in.) and 1.70 mm (.0670 in.).

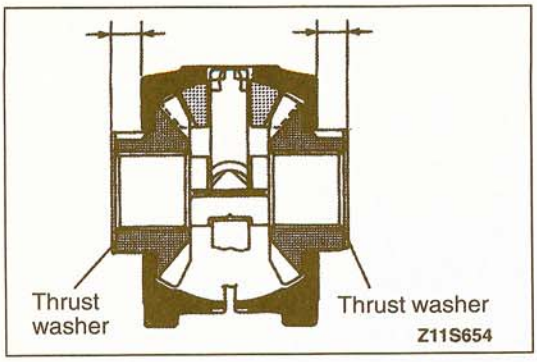


(11) Insert the thrust washer as shown in the illustration, and then select a thrust washer so that the difference between the left and right dimensions from the pressure ring rear face to the thrust washer end face is at the standar value.

**Standard value: 0.05 mm (.0020 in.) or less**

NOTE
Measure the distance while squeezing the V-shaped groove manually.

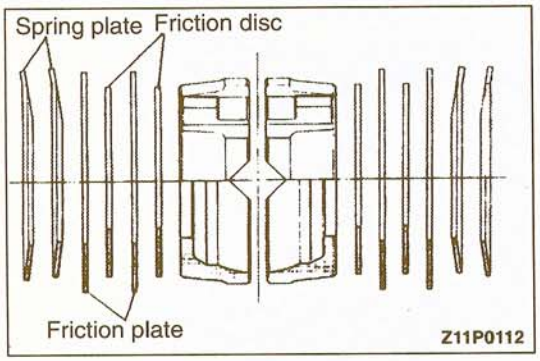


(12) Place each part in differential case (B) as shown in the illustration.

NOTE
Be careful not to insert the friction plates and friction discs in the incorrect order or install the spring plates in the incorrect direction.

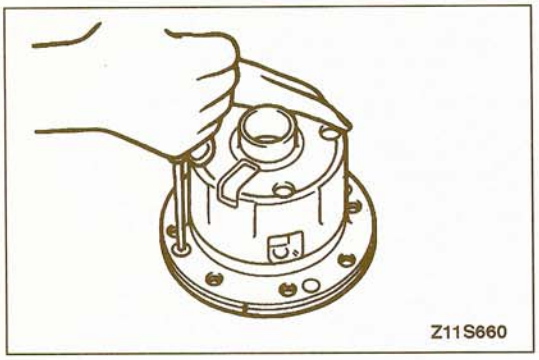


**▶B◀ SCREW INSTALLATION**

(1) Align the mating marks (the same numeral on each case) of differential case (A) and differential case (B).
(2) Turn the screwdriver slowly several times to tighten the screw so that the cases are in close contact.

NOTE
If the end surfaces of differential case (A) and differential case (B) do not come into close contact even though the screw is tightened, the thrust washer and the spring plate are probably not fitting into the groove correctly, so repeat the reassembly procedure.

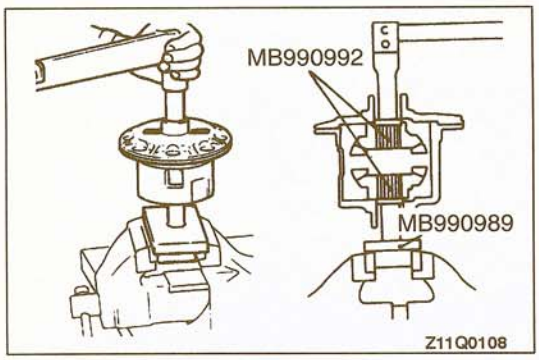


(3) After assembly, use the special tools to measure the starting torque in order to check the frictional force of the clutch plate.

**Standard value:**
**When a new clutch plate is used**
**40–75 Nm (29–54 ft.lbs.)**
**When an old clutch plate is used**
**25–75 Nm (18–54 ft.lbs.)**

NOTE
Measure the starting torque after rotating the clutch plate slightly. When measuring the torque, do so at the beginning of movement.

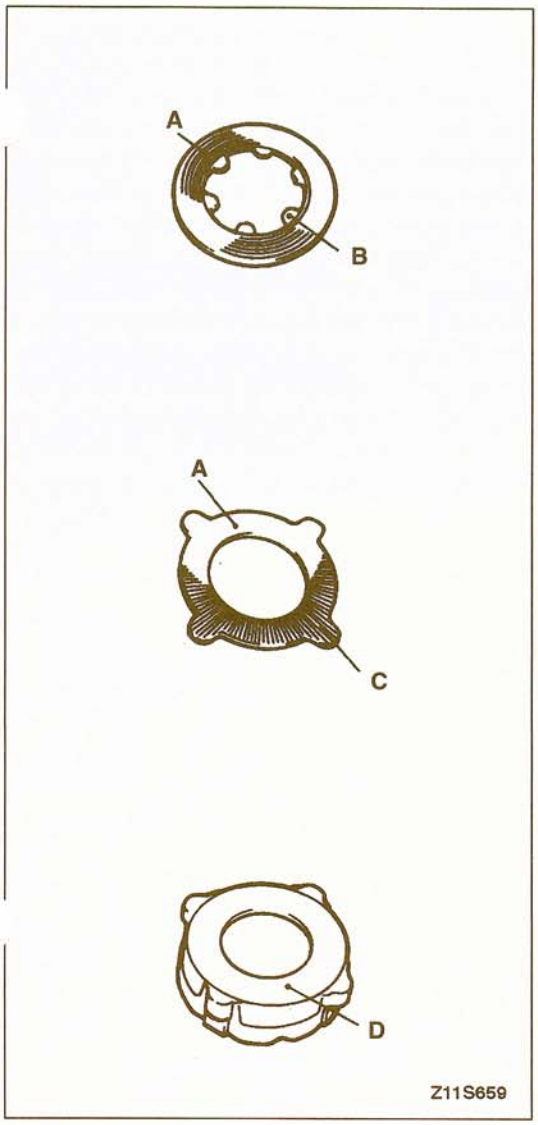


## INSPECTION

27200250025

### CONTACT AND SLIDING SURFACES OF PARTS

(1) Check the friction plate, friction disc, spring plate and pressure ring.

A. Friction surfaces of friction plate, friction disc and spring plate
If there are any signs of seizure, severe friction or color change from the heat, it will adversely affect the locking performance. Replace the part with a new one.

NOTE
The strong contact on the inner circumference of the friction surfaces is because of the spring plate. This wear is not abnormal.

B. Six projections on inner circumference of friction disc
If there are nicks and dents, it will cause abnormalities in the clutch pressure.
Use an oil stone to repair the parts. If the parts cannot be repaired, replace them.

C. Four projections on outer circumference of friction disc
If there are nicks and dents, it will cause abnormalities in the clutch pressure.
Use an oil stone to repair the parts. If the parts cannot be repaired, replace them.

D. Friction surface of pressure ring friction disc
If there are nicks and scratches, repair the part by first grinding with an oil stone and then polishing with rubbing compound on a surface plate.

NOTE
The strong contact on the inner circumference of the friction surface is because of the spring plate. This wear is not abnormal.

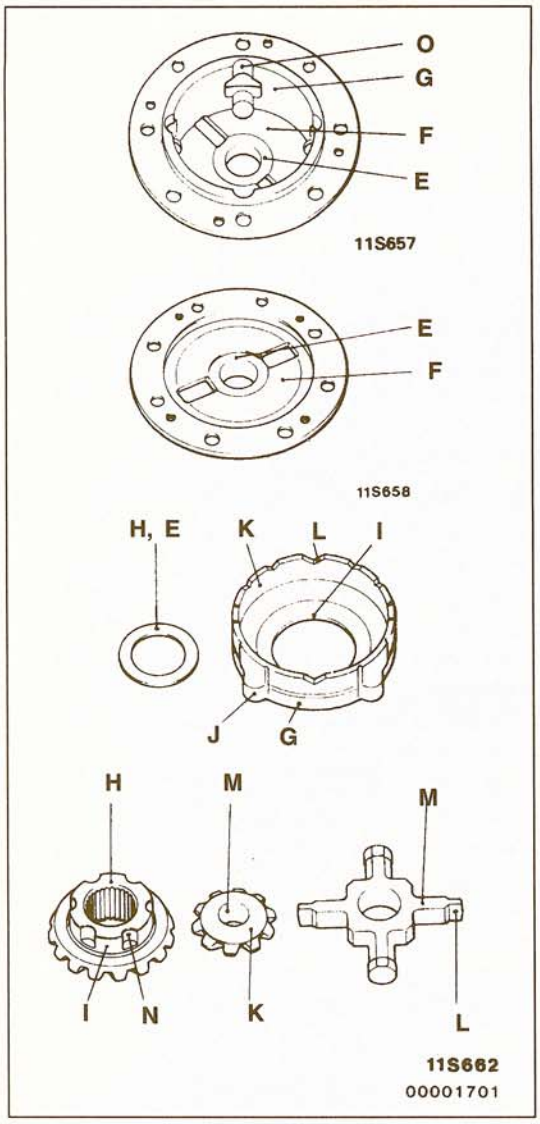


(2) Inspect the contact and sliding surfaces listed below, and repair any nicks and burrs by using an oil stone.
- E. Sliding surfaces of thrust washer and case
- F. Spring contacting surface of differential case
- G. Contact surfaces of outer circumference of pressure ring and inner circumference of differential case
- H. Sliding surfaces of side gear and thrust washer
- I. Sliding surfaces of hole in pressure ring and outer circumference of side gear
- J. Projection on outer circumference of pressure ring
- K. Spherical surface of differential pinion gear and inner diameter of pressure ring
- L. V-shaped groove in pressure ring and V-shaped part in pinion shaft
- M. Outer diameter of pinion shaft and hole of differential pinion gear
- N. Outer circumference groove of side gear
- O. Inner circumference groove of differential case

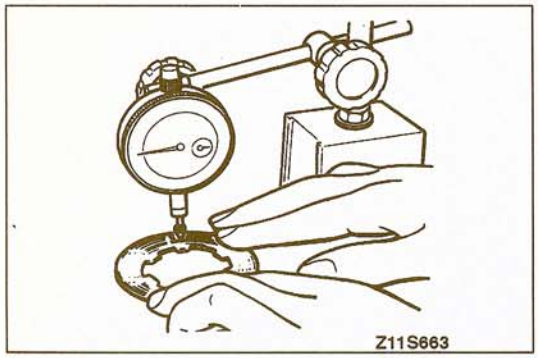


### THE FRICTION PLATE AND FRICTION DISC WARPING

Use a dial indicator to measure the amount of warping (flatness) of the friction plate and friction disc on a surface plate by turning the plate or disc.

**Limit: 0.08 mm (.0031 in.)**

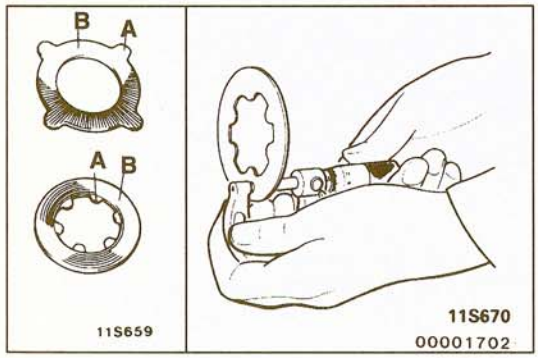


### THE FRICTION PLATE AND FRICTION DISC WEAR

(1) In order to measure the wear, measure the thickness of the friction surfaces and projections of the friction disc and plate, and then find the difference.

**Limit: 0.1 mm (.0039 in.)**

NOTE
Make the measurements at several different points.

(2) If the parts are worn beyond the allowable limit, replace them with new parts.

**TSB Revision**

## DIFFERENTIAL CASE <3.5L engine without limited slip differential> 27200240022

### DISASSEMBLY AND REASSEMBLY

**Conventional differential>**

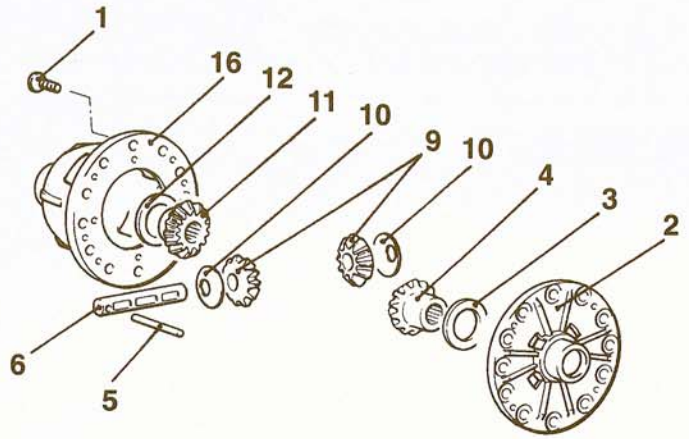


11E0198

**<Rear differential lock>**

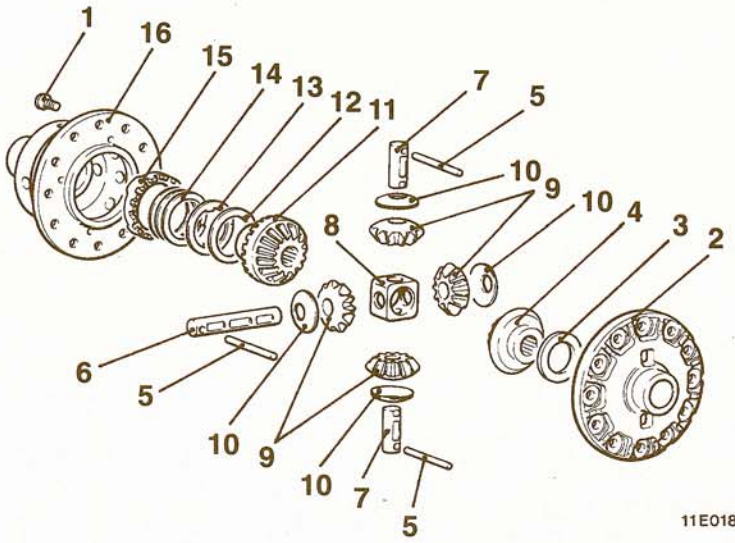


11E0189

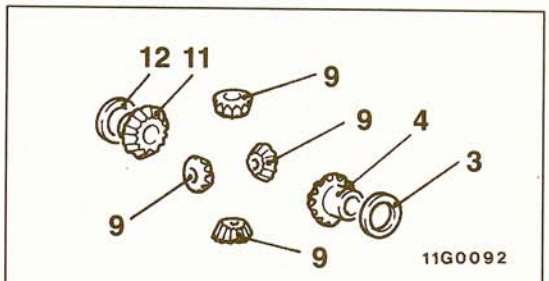


11G0092

**Differential gear set**

00001825

**Disassembly steps**

◀A▶ 1. Screw
2. Case A
3. Side gear spacer (RH)
4. Side gear (RH)
▶B◀ • Backlash adjustment on differential gear case A side
◀B▶ • Differential gear backlash check
5. Lock pin
6. Pinion shaft-A
7. Pinion shaft-B
8. Pinion shaft holder
9. Pinion gear
10. Washer
11. Side gear (LH)
12. Side gear spacer (LH)
13. Spring washer
14. Spring
15. Drive cam
▶A◀ • Backlash adjustment on differential gear case B side
16. Case B

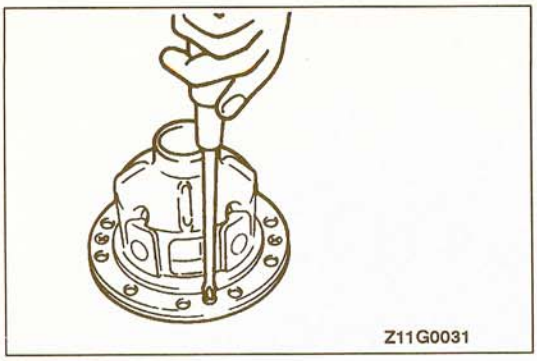
Z11G0031

## DISASSEMBLY SERVICE POINTS

### ◀A▶ SCREW REMOVAL

(1) Evenly loosen 4 screws on case A and B to remove
(2) Set case B downward and remove case A, side gea. spacer (RH) and side gear (RH).

NOTE
Check differential gear backlash to determine necessity of disassembling side (RH) and onward.

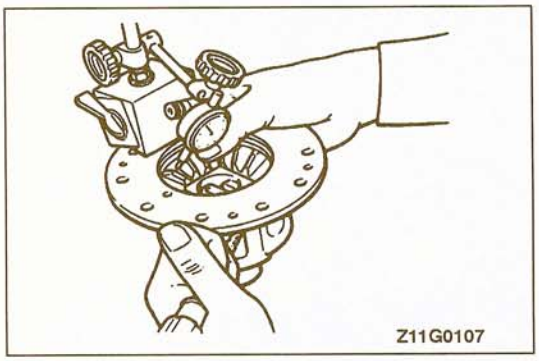
Z11G0107

### ◀B▶ DIFFERENTIAL GEAR BACKLASH CHECK

Check differential gear backlash as follows.
(1) Insert cloth wrapped screwdriver through side of case B and lock side gear (LH) and pinion gear. (one piece).
(2) Contact dial gauge on pinion gear facing the locked pinion gear and measure backlash within the standard value.

NOTE
Measure 2 pinion gears.

**Standard value:**
**Conventional differential**
**0.10–0.25 mm (.004–.01 in.)**
**Rear differential lock**
**0.15–0.20 mm (.005–.008 in.)**

(3) When backlash exceeds the standard value, adjust side gear spacer (LH).

NOTE
If backlash is within the standard value, assure appropriate gear spacer (RH) thickness and assemble differential case assembly.

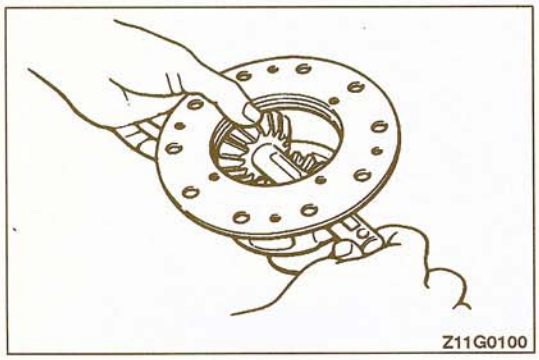
Z11G0100

## REASSEMBLY SERVICE POINTS

### ▶A◀ BACKLASH ADJUSTMENT ON DIFFERENTIAL GEAR CASE B SIDE

Adjust backlash on differential gear case B side as follows.
(1) Temporarily install side gear spacer (LH), side gear (LH), washers, 2 pinion gears and pinion shaft A on case B.

NOTE
Do not assemble pinion shaft holder, pinion shaft-B or the remaining pinion gears (2).

(2) Insert wrapped screwdriver through side of case B to lock one side of pinion gear and side gear (LH.)

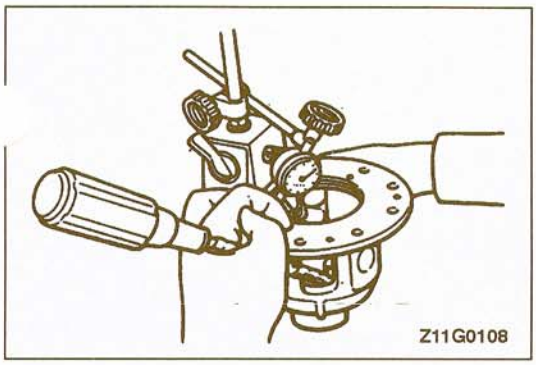
Z11G0108

(3) Place dial gauge on unlocked pinion gear and measure differential gear backlash within the standard value.

**Standard value:**
**Conventional differential**
**0.10–0.25 mm (.004–.01 in)**
**Rear differential lock**
**0.15–0.20 mm (.005–.008 in)**

(4) When backlash exceeds the standard value, adjust with selected side gear spacer (LH).
(5) Install washers, pinion gears, pinion shaft holder and pinion shaft-A and B. Lock withe lock pin through case B.

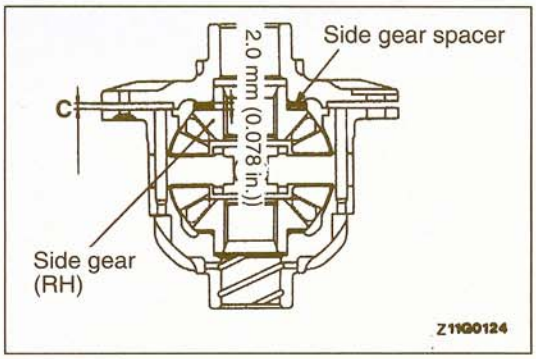

Z11G0124

### ▶B◀ BACKLASH ADJUSTMENT ON DIFFERENTIAL GEAR CASE A SIDE

Adjust backlash as follows.
(1) Install side gear (RH) and 2 side gear spacers [1.0 mm (0.039 in.) thick]. Press differential case A to differential case B.

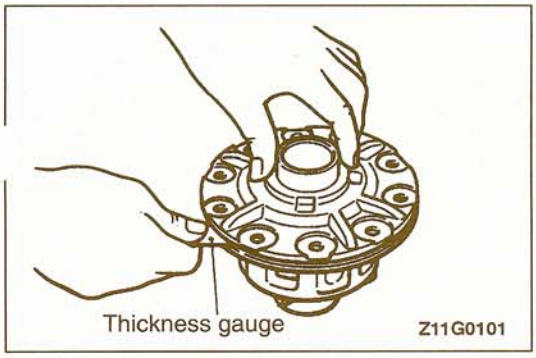

Z11G0101

(2) Measure flange space (C) between differential case A and B with thickness gage.
(3) Calculate side gear spacer (RH) thickness (D) as follows:
D=2.0 mm (.078 in.)–[C+0.2 mm (.008 in.)
(4) Choose spacer with a thickness nearest D in (3) and adjust differential gear backlash on the right side.

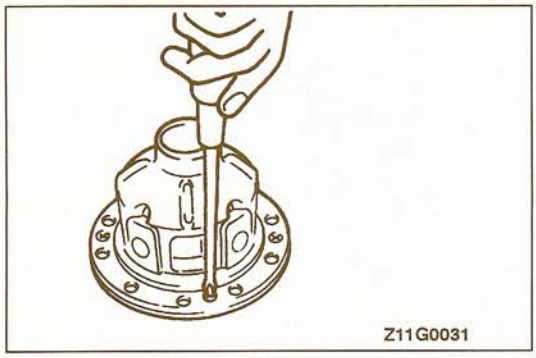
Z11G0031

(5) Match the match marks and assemble cases A and B.
(6) Assure smooth rotation of inner shaft.

## INSPECTION

27200250032

Wash the disassembled parts in cleaning solvent, dry them using compressed air, and then check the following areas:
- Check the side gears, pinion gears and pinion shaft for wear or damage.
- Check the side gear spline for wear or damage.

NOTES

# WHEEL AND TIRE

## CONTENTS

31109000052


GENERAL SPECIFICATIONS ..... 2

ON-VEHICLE SERVICE ..... 4

- Tire Inflation Pressure Check ..... 4
- Tire Wear Check ..... 4
- Wheel Runout Check ..... 4

SERVICE SPECIFICATIONS ..... 2

TROUBLESHOOTING ..... 3

# GENERAL SPECIFICATIONS

31100020019

| Items | | Vehicles without wide fender | Vehicles with wide fender <3.0L engine> | |
|---|---|---|---|---|
| Tire size | | P235/75R15 105S | 31×10.50R15 LT | 265/70R15 110H |
| Wheel type | | Steel type<br>Aluminum type* | Aluminum type | Aluminum type |
| Wheel size | | 15×6JJ | 15×7JJ | 15×7JJ |
| Amount of wheel offset mm (in.) | | 33 (1.29) | 10 (.39) | 10 (.39) |
| P.C.D. mm (in.) | | 139.7 (5.5) | 139.7 (5.5) | 139.7 (5.5) |
| Tire inflation pressure kPa (psi) | Front | 180 (26) | 210 (30) | 180 (26) |
| | Rear | 240 (35) | 275 (40) | 200 (29) |

| Items | | Vehicles with wide fender <3.5L engine> | |
|---|---|---|---|
| Tire size | | 265/70R15 110H | 31×10.50R15 LT |
| Wheel type | | Aluminum type | Aluminum type |
| Wheel size | | 15×7JJ | 15×7JJ |
| Amount of wheel offset mm (in.) | | 10 (.39) | 10 (.39) |
| P.C.D. mm (in.) | | 139.7 (5.5) | 139.7 (5.5) |
| Tire inflation pressure kPa (psi) | Front | 180 (26) | 210 (30) |
| | Rear | 220 (32) | 310 (45) |

NOTE
1. * indicates options.
2. P.C.D. (Pitch Circle Diameter) indicates the pitch circle diameter of the wheel installation holes.

# SERVICE SPECIFICATIONS

31100030043

| Items | | | Standard value | Limit |
|---|---|---|---|---|
| Wheel nut tightening torque Nm (ft.lbs.) | | | 98–118 (72–87) | – |
| Wheel runout mm (in.) | Radial | Aluminum wheels | – | 1.0 (.039) |
| | | Steel wheels | – | 1.2 (.047) |
| | Lateral | Aluminum wheels | – | 1.0 (.039) |
| | | Steel wheels | – | 1.2 (.047) |
| Tread depth of tire mm (in.) | | | – | 1.6 (.06) |

TSB Revision

# TROUBLESHOOTING

31100070052

| Trouble Symptom | | Probable Cause | | Remedy |
|---|---|---|---|---|
| Rapid wear at shoulders |  11X0109 | Under-inflation or lack of rotation |  11X0116 | Adjust the tire pressure. |
| Rapid wear at center |  11X0110 | Over-inflation or lack of rotation | 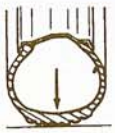 11X0117 | |
| Cracked treads |  11X0111 | Under-inflation | | Adjust the tire pressure. |
| Wear on one side |  11X0112 | Excessive camber |  11X0118 | Check the camber. |
| Feathered edge |  11X0113 | Incorrect toe-in | 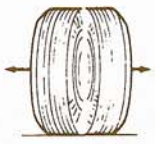 11X0119 | Adjust the toe-in. |
| Bald spots |  11X0114 | Unbalanced wheel |  11X0120 | Adjust the unbalanced wheels. |
| Scalloped wear |  11X0115 | Lack of rotation of tires or worn or out-of-alignment suspension | | Rotate the tires.<br>Check the front suspension alignment. |

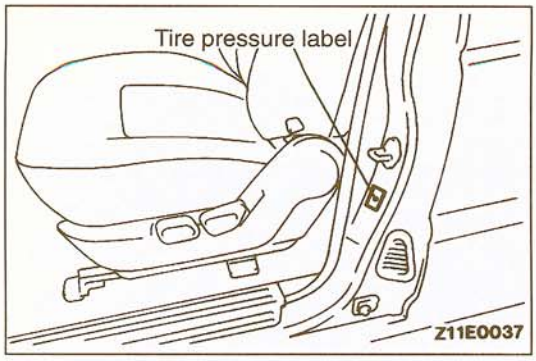


# ON-VEHICLE SERVICE

31100090058

## TIRE INFLATION PRESSURE CHECK

Check the inflation pressure of the tires. If it is not with. the standard value, adjust it.

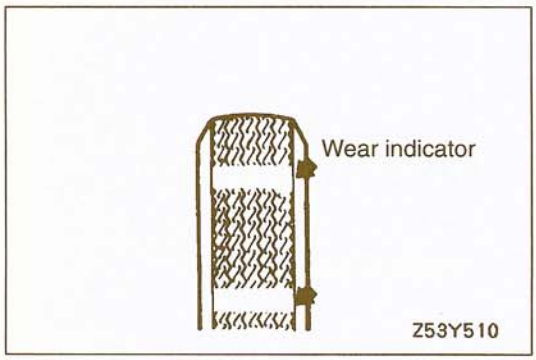


## TIRE WEAR CHECK

31100100041

Measure the tread depth of the tires.

**Limit: 1.6 mm (.06 in.)**

If the remaining tread depth is less than the limit, replace the tire.

NOTE
When the tread depth of the tire is reduced to 1.6 mm (.06 in.) or less, the wear indicator will appear.

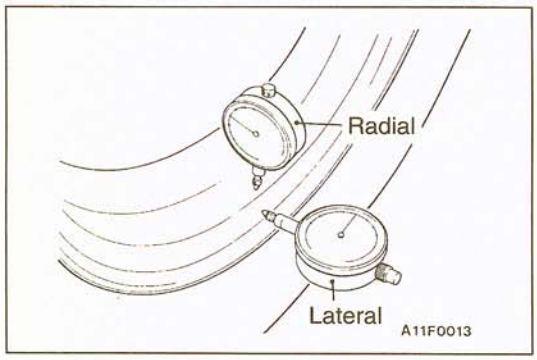


## WHEEL RUNOUT CHECK

31100110051

Jack up the vehicle so that the wheels are clear of the floor. While slowly turning the wheel, use a dial indicator to measure the wheel runout.

**Limit:**

| Items | Aluminum wheels | Steel wheels |
|---|---|---|
| Radial | 1.0 mm (.039 in.) | 1.2 mm (.047 in.) |
| Lateral | 1.0 mm (.039 in.) | 1.2 mm (.047 in.) |

If the wheel runout exceeds the limit, replace the wheel.

# POWER PLANT MOUNT

## CONTENTS

32109000059

ENGINE MOUNTING ..... 2
FRONT DIFFERENTIAL MOUNTING ..... 4

# ENGINE MOUNTING

32100110065

## REMOVAL AND INSTALLATION

<3.0L-12 VALVE engine>

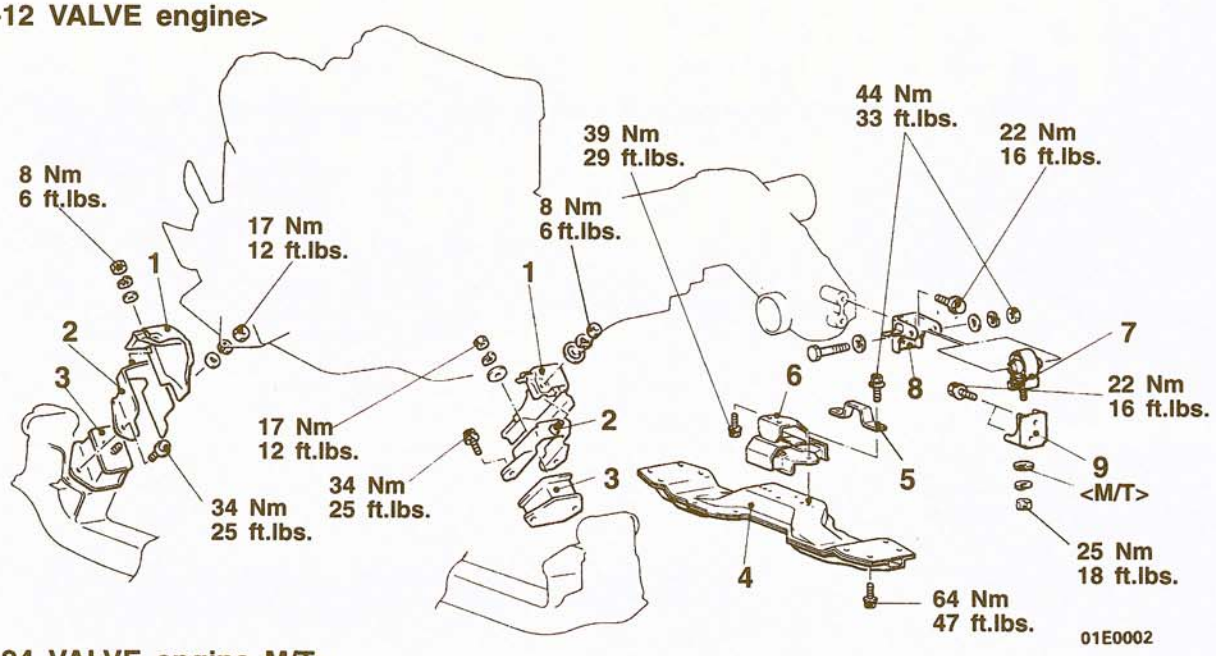


<3.0L-24 VALVE engine M/T>

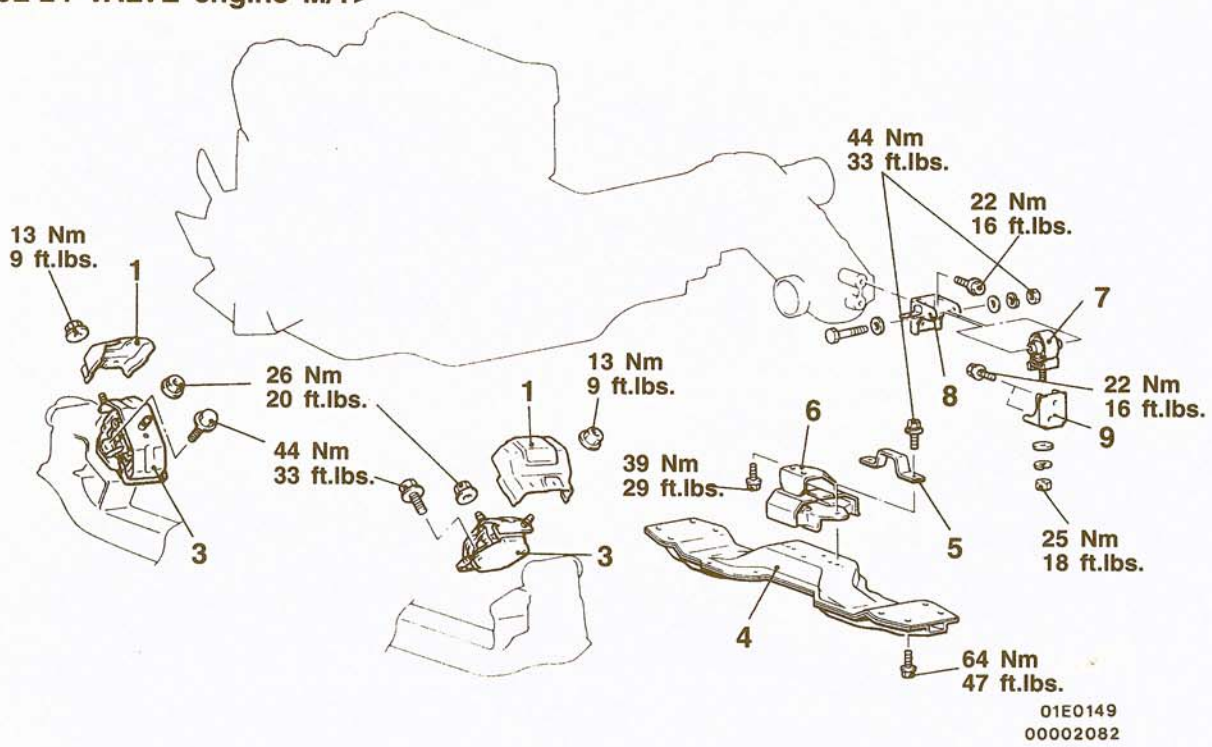


**Front engine mount removal steps**

- Engine Assembly Removal (3.0L-12 VALVE engine: Refer to GROUP 11A – Engine Assembly.) (3.0L-24 VALVE engine: Refer to GROUP 11A – Engine Assembly.)

1. Heat protector
2. Front insulator stopper

▶A◀ 3. Engine support front insulator

**Rear engine mount removal steps**

4. No. 2 crossmember
5. Stopper
6. Engine support rear insulator

**Transfer roll stopper removal steps**

7. Transfer support insulator
8. Transfer mounting bracket
9. Transfer support bracket

TSB Revision 96-32-001

**<3.0L-24 VALVE engine A/T, 3.5L engine>**

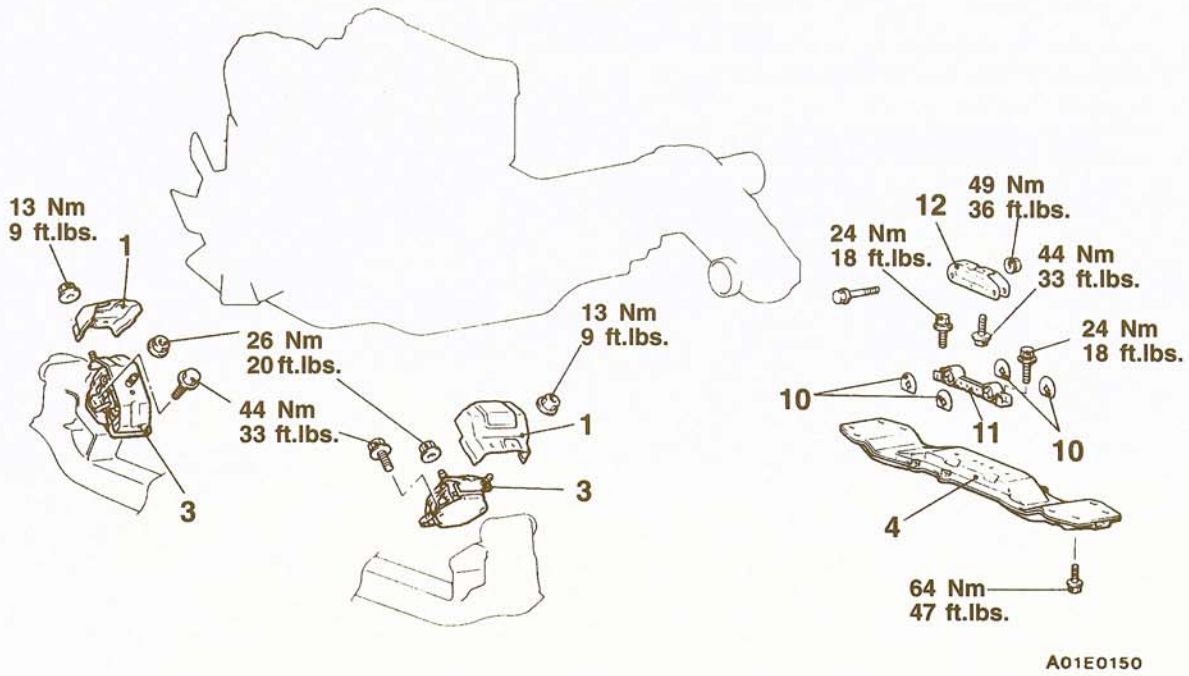


**Front engine mount removal steps**

- Engine Assembly Removal (3.0L-24 VALVE engine: Refer to GROUP 11A – Engine Assembly.) (3.5L engine: Refer to GROUP 11C – Engine Assembly.)

1. Heat protector
3. Engine support front insulator

**Rear engine mount removal steps**

4. No. 2 crossmember
10. Stopper
11. Engine support rear insulator
12. Engine support rear bracket

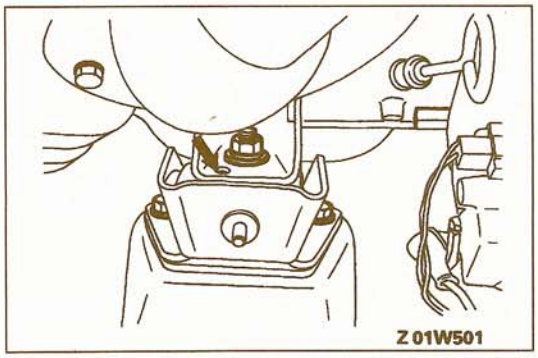


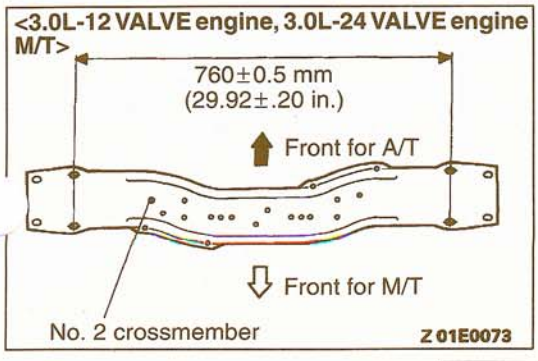


## INSTALLATION SERVICE POINT

**▶A◀ ENGINE SUPPORT FRONT INSULATOR INSTALLATION <3.0L-12 VALVE engine>**

Check that the location boss and hole are aligned.

**Caution**
**Do not distort the rubber portions, and never stain the rubber portions with fuel or oil.**

## INSPECTION

32100120037

- Check the insulators for cracks, separation or deformation.
- Check the front insulator stoppers for deformation.
- Check the insulators for cracks, separation or deformation.
- Check the transfer mounting bracket for deformation or corrosion.
  <3.0L-12 VALVE engine, 3.0L-24 VALVE engine M/T>
- Check the transfer support bracket for deformation or corrosion.
  <3.0L-12 VALVE engine, 3.0L-24 VALVE engine M/T>
- Check the No. 2 crossmember for deformation or corrosion.

TSB Revision EG-32-001

# FRONT DIFFERENTIAL MOUNTING

32100170018

## REMOVAL AND INSTALLATION

**Pre-removal and Post-installation Operation**
- Under Cover and Under Skid Plate Removal and Installation

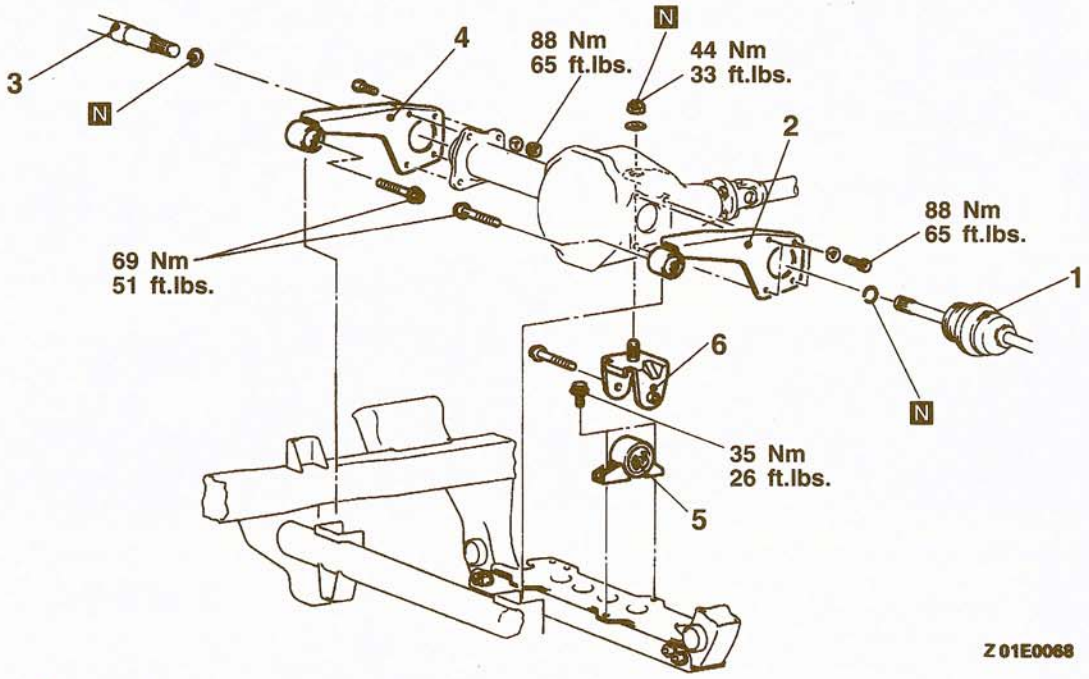


**Removal steps**

1. Knuckle and drive shaft assembly (Refer to GROUP 26 – Drive Shaft.)
◀A▶ 2. Differential mounting bracket (L.H.)
3. Inner shaft (Refer to GROUP 26 – Inner Shaft.)
◀A▶ 4. Differential mounting bracket (R.H.)
◀A▶ 5. Differential mounting bracket
6. Differential support bracket

## REMOVAL SERVICE POINT

### ◀A▶ DIFFERENTIAL MOUNTING BRACKET (L.H.)/ DIFFERENTIAL MOUNTING BRACKET (R.H.)/ DIFFERENTIAL MOUNTING BRACKET REMOVAL

While supporting the differential carrier with a jack, remove the differential mounting bracket.

NOTE
Support the differential carrier with a jack until the differential mounting bracket is installed.

## INSPECTION

32100180011

- Check the differential mounting brackets for deformation or damage.
- Check the differential support bracket for deformation or damage.
- Check insulators for cracks, separation or deformatior

TSB Revision

# FRONT SUSPENSION

## CONTENTS

33109000025

FRONT SUSPENSION ..... 33A

ELECTRONICALLY–CONTROLLED SUSPENSION (ECS) ..... 33B

ELECTRONICALLY–CONTROLLED SUSPENSION (ACTIVE PREVIEW ECS) ..... 33C

NOTE
The tinted sections are not included in this manual.

NOTES

# FRONT SUSPENSION

## CONTENTS

33109000032


**CONTROL SWITCH** ..... 21

**CONTROL UNIT** ..... 21

**GENERAL SPECIFICATIONS** ..... 2

**LOWER ARM** ..... 14

- Lower Arm Bushing (A) Replacement ..... 15
- Lower Arm Bushing (B) Replacement ..... 16
- Lower Ball Joint Dust Cover Replacement .... 16

**ON-VEHICLE SERVICE** ..... 9

- Front Wheel Alignment Check and Adjustment ..... 9

**SEALANTS AND ADHESIVES** ..... 3

**SERVICE SPECIFICATIONS** ..... 2

**SHOCK ABSORBER AND UPPER ARM** .... 11

- Ball Joint Dust Cover Replacement ..... 13

**SPECIAL TOOLS** ..... 3

**STABILIZER BAR** ..... 19

**TORSION BAR** ..... 17

**TROUBLESHOOTING** ..... 4

# GENERAL SPECIFICATIONS

33100020013

## SUSPENSION TYPE

| Items | Specification |
|---|---|
| Suspension system | Independent, double wishbone with torsion bar and telescopic shock absorber |

## TORSION BAR

| Items | Specifications |
|---|---|
| Length×O.D. mm (in.) | 1277.5×26.2 (50.295×1.031) <3.0L-12 VALVE engine><br>1307.5×26.4 (51.476×1.039) <3.0L-24 VALVE engine, 3.5L engine> |
| Spring constant (wheel position) N/mm (lbs./in.) | 25 (140) |

## SHOCK ABSORBER

| Items | | Vehicles without remote-controlled variable shock absorbers | Vehicles with remote-controlled variable shock absorbers |
|---|---|---|---|
| Type | | Hydraulic, cylindrical, double-acting type with low-pressure nitrogen gas | Hydraulic, cylindrical, double-acting type with low-pressure nitrogen gas |
| Max. length mm (in.) | | 345 (13.6) | 345 (13.6) |
| Min. length mm (in.) | | 225 (8.9) | 230 (9.1) |
| Stroke mm (in.) | | 120 (4.7) | 115 (4.5) |
| Damping force [at 0.3 m/sec (0.9 ft./sec.)] N (lbs.) | Expansion | 2,450 (540) | Hard: 3,150 (694)<br>Medium: 2,350 (518)<br>Soft: 1,700 (375) |
| | Contraction | 1,500 (331) | Hard: 1,600 (353)<br>Medium: 1,250 (276)<br>Soft: 850 (187) |

# SERVICE SPECIFICATIONS

33100030023

| Items | | Standard value | Limit |
|---|---|---|---|
| Toe-in | At the center of tire tread mm (in.) | 3.5±3.5 (.14±.14) | – |
| | At the rim of disc wheel mm (in.) | 1.8±1.8 (.07±.07) | – |
| | Toe-in angle (per wheel) | 0°–0°17' | – |
| | Toe-out angle on turn (inner wheel when outer wheel is at 20°) | 21°56' | – |

| Items | | Standard value | Limit |
|---|---|---|---|
| Camber | | 0°40'±30' | – |
| Caster | | 3°00'±1°00' | – |
| Kingpin inclination | | 14°52' | – |
| Side slip mm (in.) | | 0±3 (0±.12) | – |
| Upper ball joint starting torque Nm (in.lbs.) | | 0.8–3.5 (7–30) | – |
| Shock absorber attaching dimension mm (in.) | Normal shock absorber | 1–2 (.04–.08) | – |
| | Remote-controlled variable shock absorber | 1.5–2.5 (.06–.10) | – |
| Lower ball joint end play mm (in.) | | – | 0.3 (.012) |
| Clearance between bump stopper and bump stopper bracket mm (in.) | | 21–23 (.83–.91) | – |
| Stabilizer link ball joint starting torque Nm (in.lbs.) | | 1.7–3.1 (15–27) | – |

## SEALANTS AND ADHESIVES

33100050012

| Items | Specified sealant |
|---|---|
| Upper ball joint dust cover to upper ball joint groove | 3M ATD Part No. 8661 or equivalent |

## SPECIAL TOOLS

33100060022

| Tool | Tool number and name | Supersession | Application |
|---|---|---|---|
|  | MB991406<br>Steering linkage puller | – | Removal of ball joints and knuckle |
|  | MB990883<br>Arbor | MB990883-01 | Removal and press-fitting of lower arm bushing |
|  | MB991522<br>Torsion bar bushing remover and installer | – | Removal and press-fitting of the bushing |

| Tool | Tool number and name | Supersession | Application |
|---|---|---|---|
|  | MB990326<br>Preload socket | General service tool | Measurement of the stabilizer link starting torque |

# TROUBLESHOOTING <Remote controlled variable shock absorbers>

33100070018

## THE TROUBLESHOOTING CHART SELECTION

Check the malfunction symptoms according to the following flow chart, and inspect according to the inspection chart.

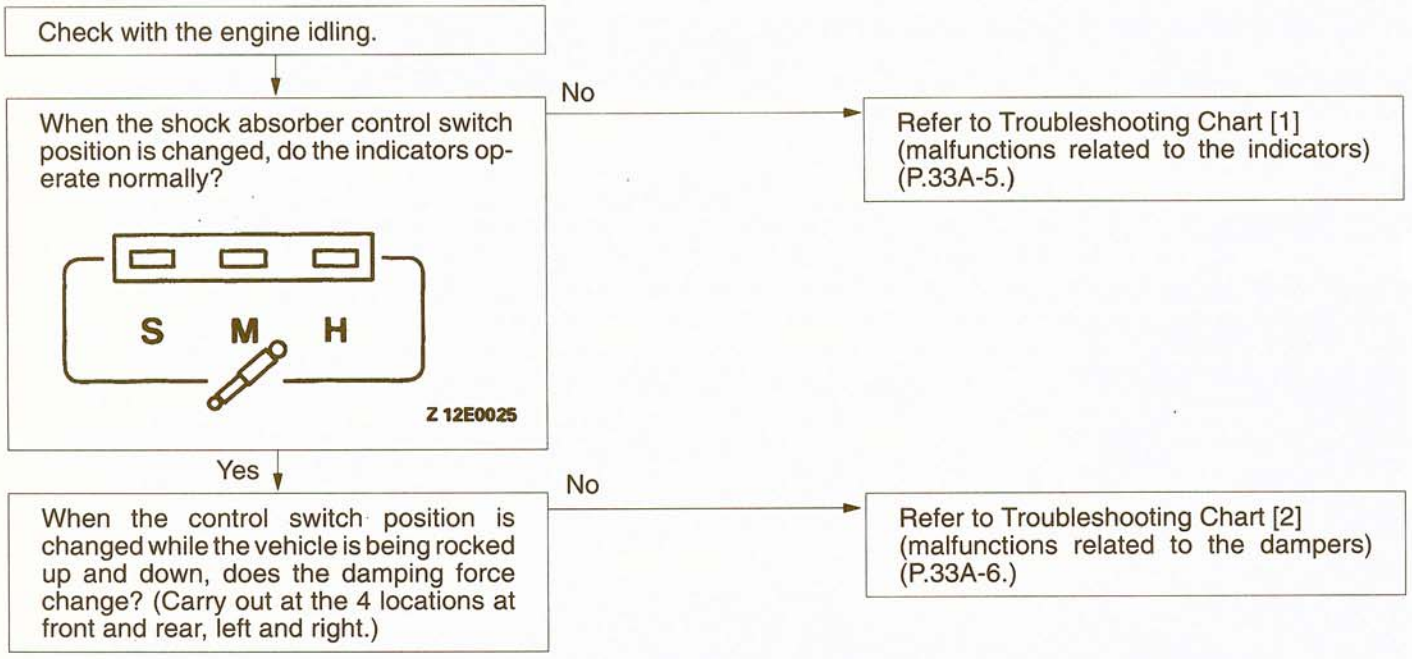

## CHART CLASSIFIED BY TROUBLE SYMPTOM

### TROUBLESHOOTING CHART [1] (MALFUNCTIONS RELATED TO THE INDICATORS)

| Trouble Symptom | Inspection | Normal condition | Probable Cause |
|---|---|---|---|
| Even when switched to S (Soft) mode, the indicator does not illuminate. | (1) Disconnect the shock absorber control switch connector and ground harness connector terminal (4). | The indicator illuminates. | • Open circuit in fuse No. 11 in the junction block<br>• Malfunction of light-emitting diode<br>• Open circuit in the harness between the combination meter and either the junction block or the shock absorber control switch |
| | (2) Disconnect the shock absorber control switch connector and check for continuity between switch connector terminals (4) – (2) when the switch is set to S (Soft). | Continuity | • Malfunction of shock absorber control switch |
| | (3) When the results of inspection items (1) and (2) are normal | – | • Open circuit in the harness between the control switch and the ground<br>• Incorrect ground connection |
| Even when switched to M (Medium) mode, the indicator does not illuminate. | (1) Disconnect the shock absorber control switch connector and ground harness connector terminal (5). | The indicator illuminates. | • Open circuit in fuse No. 11 in the junction block<br>• Malfunction of light-emitting diode<br>• Open circuit in the harness between the combination meter and either the junction block or the shock absorber control switch |
| | (2) Disconnect the shock absorber control switch connector and check for continuity between switch connector terminals (5) – (2) when the switch is set to M (Medium). | Continuity | • Malfunction of shock absorber control switch |
| | (3) When the results of inspection items (1) and (2) are normal | – | • Open circuit in the harness between the shock absorber control switch and the ground<br>• Incorrect ground connection |

| Trouble Symptom | Inspection | Normal condition | Probable Cause |
|---|---|---|---|
| Even when switched to H (Hard) mode, the indicator does not illuminate. | (1) Disconnect the shock absorber control switch connector and ground harness connector terminal (6). | The indicator illuminates. | • Open circuit in fuse No. 11 ir the junction block<br>• Malfunction of light-emitting diode<br>• Open circuit in the harness between the combination meter and either the junction block or the shock absorber control switch |
| | (2) Disconnect the shock absorber control switch connector and check for continuity between switch connector terminals (6) – (2) when the switch is set to H (Hard). | Continuity | • Malfunction of shock absorber control switch |
| | (3) When the results of inspection items (1) and (2) are normal | – | • Open circuit in the harness between the shock absorber control switch and the ground<br>• Incorrect ground connection |

## TROUBLESHOOTING CHART [2] (MALFUNCTIONS RELATED TO THE DAMPERS)

**A** Part of the damping force does not change.

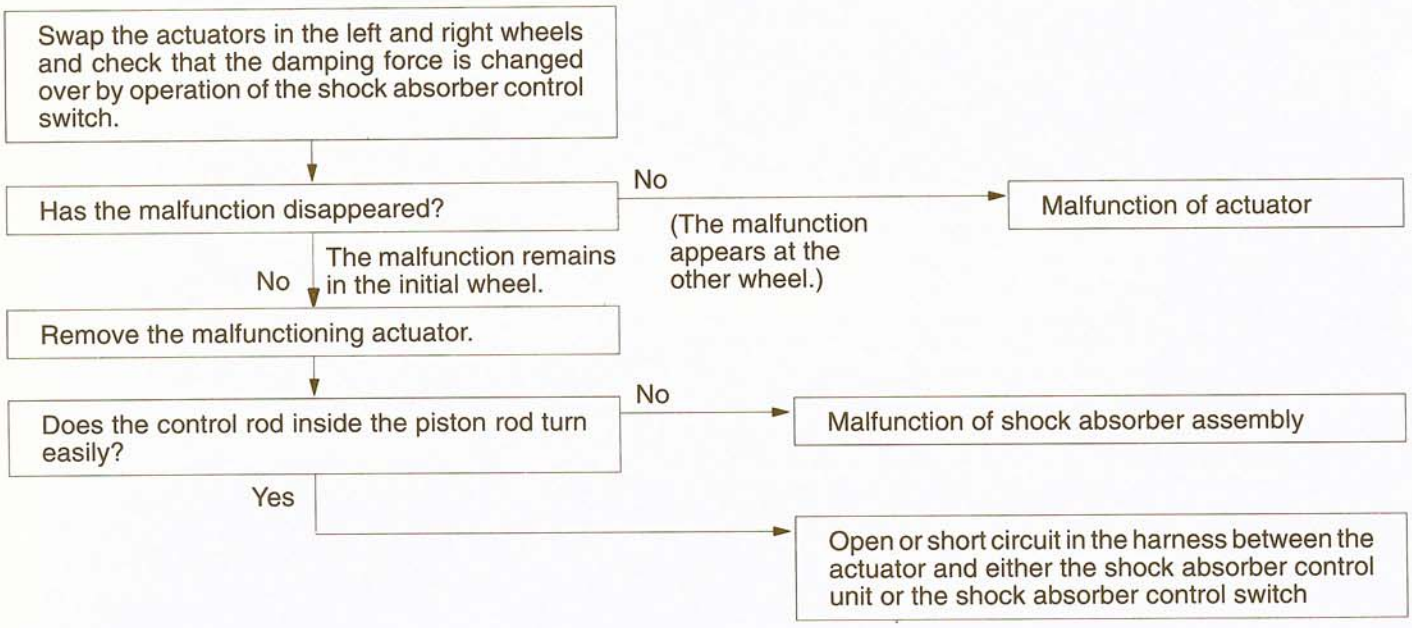


NOTE
When the mutual damping forces do not change, the problem is probably an open circuit in the harness between the actuator and either the shock absorber control unit or the shock absorber control switch, so the harness should be checked first.

**TSB Revision**

**B** Damping force for all wheels does not change over.

Disconnect the shock absorber control unit connector.

When the ignition switch is turned to ON, does a voltage of approximately 12 V show between harness connector terminal (4) of the shock absorber control unit and the ground?

No → Open circuit in the harness between the shock absorber control unit and the junction block

Yes

Is there continuity between harness connector terminal (1) of the shock absorber control unit and the ground?

No → Open circuit in the harness between the shock absorber control unit and the ground

Yes

Is there normal continuity between shock absorber control unit harness connector terminal (3) and the ground, terminal (7) and the ground and terminal (2) and the ground?

<When normal>

| Terminal | Mode | | |
|---|---|---|---|
| | S (Soft) | M (Medium) | H (Hard) |
| No. 3 | Continuity | No continuity | No continuity |
| No. 7 | No continuity | Continuity | No continuity |
| No. 2 | No continuity | No continuity | Continuity |

No → Open circuit in the harness between the shock absorber control unit and the shock absorber control switch

Yes

When 12 V is applied to harness connector terminal (6) of the shock absorber control unit, does the damping force change over?

No → Open or short circuit in the harness between the actuator and either the shock absorber control unit or the shock absorber control switch

Yes → Incorrect shock absorber control unit connection, or malfunction of shock absorber control unit

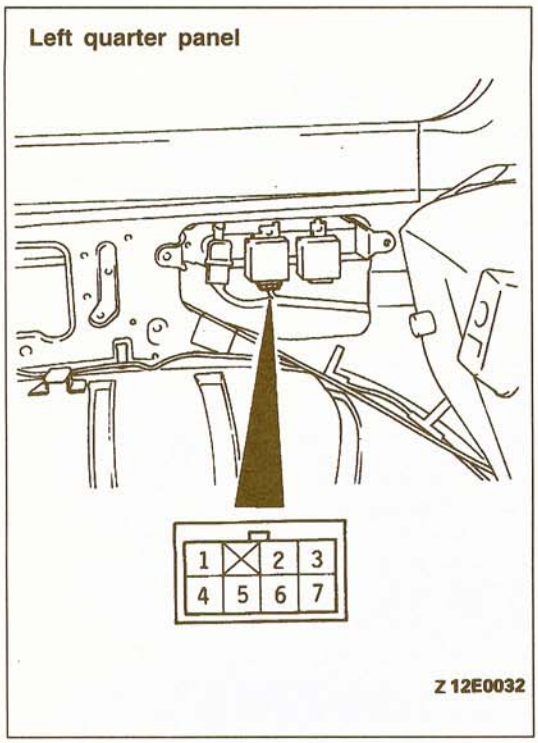


## SHOCK ABSORBER CONTROL UNIT SIGNAL CIRCUIT INSPECTION

(1) Disconnect the shock absorber control unit connector and inspect the connector at the harness side.

B+: Battery Positive Voltage

| Terminal No. | Connection destination | Measurement | Tester connection | Check condition | | Standard |
|---|---|---|---|---|---|---|
| 1 | Ground | Continuity | (1)–Ground | Constantly | | Continuity |
| 2 | Shock absorber control switch (Hard) | Continuity | (2)–Ground | Shock absorber control switch condition | S (Soft mode) | No continuity |
| | | | | | M (Medium mode) | No continuity |
| | | | | | H (Hard mode) | Continuity |
| 7 | Shock absorber control switch (Medium) | Continuity | (7)–Ground | Shock absorber control switch condition | S (Soft mode) | No continuity |
| | | | | | M (Medium mode) | Continuity |
| | | | | | H (Hard mode) | No continuity |
| 3 | Shock absorber control switch (Soft) | Continuity | (3)–Ground | Shock absorber control switch condition | S (Soft mode) | Continuity |
| | | | | | M (Medium mode) | No continuity |
| | | | | | H (Hard mode) | No continuity |
| 4 | Power supply | Voltage | (4)–Ground | Ignition switch | OFF | 0 V |
| | | | | | ON | B+ |

(2) Connect the shock absorber control unit and inspect.

| Terminal No. | Connection destination | Measurement | Tester connection | Check condition | Standard |
|---|---|---|---|---|---|
| 6 | Shock absorber actuator | Voltage | (6)–Ground | 5 seconds after operating the shock absorber control switch | Approx. 12 V |
| | | | | Conditions except above | 0 V |

**TSB Revision**

# ON-VEHICLE SERVICE

33100090052

## FRONT WHEEL ALIGNMENT CHECK AND ADJUSTMENT

### TOE-IN

1. Measure the toe-in.

   **Standard value:**
   **At the center of tire tread**
   **3.5±3.5 mm (.14±.14 in.)**
   **At the rim of disc wheel**
   **1.8±1.8 mm (.07±.07 in.)**
   **Toe angle (per wheel) 0°–0°17'**

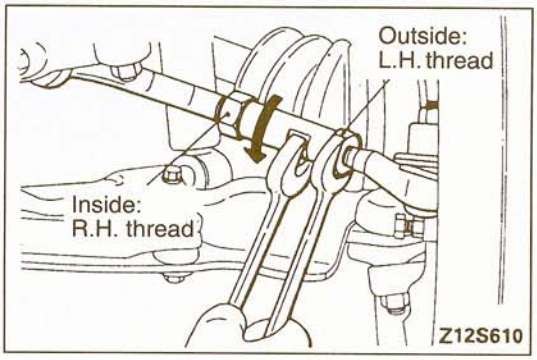


2. If the toe-in is not within the standard value, adjust the toe-in by turning the left and right tie rod turnbuckles by the same amount (in opposite directions).

   **Caution**
   **The difference between the left and right tie rods should not exceed 5 mm (.2 in.).**

3. After adjusting, use a turning radius gage to confirm that the steering wheel turning angle is within the standard value range. (Refer to GROUP 37A.)

### TOE-OUT ANGLE ON TURNS

To check the steering linkage, especially after the vehicle has been involved in an accident or if an accident is presumed, it is advisable to check the tow-out angle on turns in addition to the wheel alignment.
Conduct this test on the left turn as well as on the right turn.

**Standard value:**
**21°56' (inner wheel when outer wheel at 20°)**

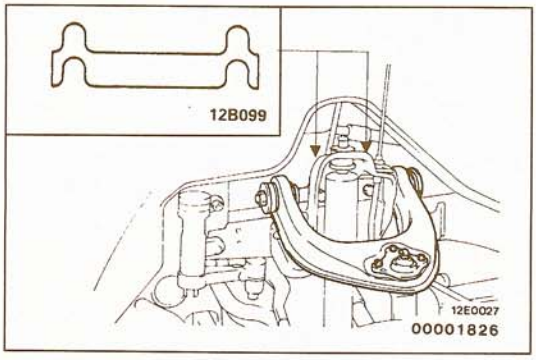


### CAMBER

**Standard value:**
**0°40'±30' (Left/right deviation within 30')**

1. Adjust the camber by increasing or decreasing the thickness of the adjusting shim provided between the upper arm shaft and the crossmember.

   NOTE
   - Standard thickness of the shim is 4 mm (.16 in.).
   - The number of shims is three or less.

   **Camber adjustment shim (yellow plating)**

| Part number | Thickness mm (in.) |
|---|---|
| MB176288 | 1.0 (.039) |
| MB176289 | 2.0 (.079) |

### CASTER

**Standard value: 3°00'±1° (Left/right deviation within 30')**

NOTE
1. Caster is pre-set at the factory and cannot be adjusted.
2. If the caster is not within the standard value, replace bent or damaged parts.

### KINGPIN INCLINATION

**Standard value: 14°52'**

### SIDE SLIP

Measure the side slip with a side slip tester.

**Standard value: 0±3 mm (0±.12 in.)**

# SHOCK ABSORBER AND UPPER ARM

33200250019

## REMOVAL AND INSTALLATION

**Post-installation Operation**
- Wheel Alignment Inspection and Adjustment (Refer to P.33A-9.)
- Brake line bleeding (Vehicles without A.B.S.: Refer to GROUP 35A – On-vehicle Service.)(Vehicles with A.B.S.: Refer to GROUP 35C – On-vehicle Service.)

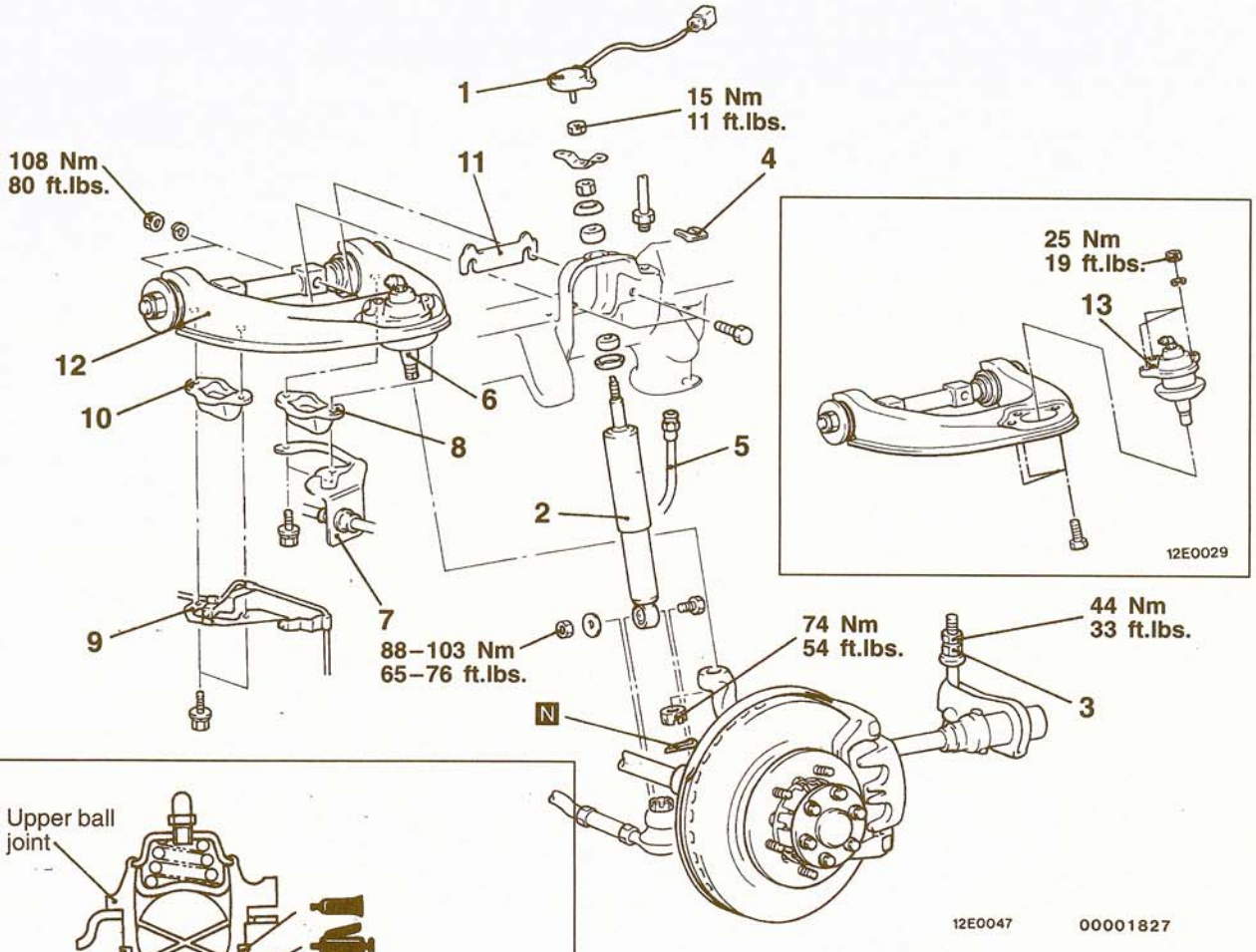





**Sealant: 3M ATD Part No. 8661 or equivalent**

**Shock absorber removal steps**

▶B◀ 1. Actuator (Vehicles with remote controlled variable shock absorbers)
▶B◀ 2. Shock absorbers

**Upper arm removal steps**

- Bump stopper and bump stopper bracket clearance adjustment (Refer to P.33A-18.)

◀A▶ 3. Anchor arm assembly adjusting nut
4. Hose clip
5. Brake hose connection
◀B▶ 6. Upper ball joint and knuckle connection
7. Brake hose support
8. Rebound stopper
9. Speed sensor bracket (Vehicles with A.B.S.)
10. Rebound stopper
11. Shim
▶A◀ 12. Upper arm
13. Upper ball joint

**TSB Revision**

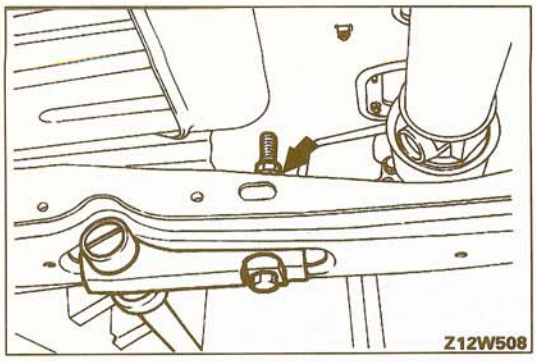


## REMOVAL SERVICE POINTS

### ◀A▶ ANCHOR ARM ASSEMBLY ADJUSTING NUT LOOSENING

Loosen the anchor bolt of the torsion bar all the way.

NOTE
When the anchor arm assembly adjusting nut is loosened, use a jack to support the lower arm of the side to be loosened to make the work easier.

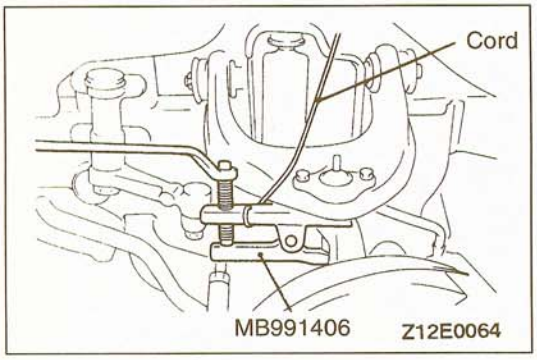


### ◀B▶ UPPER BALL JOINT AND KNUCKLE DISCONNECTION

Use the special tool to disconnect the upper arm ball joint from the knuckle.

**Caution**
1. **Be sure to tie the cord of the special tool to the nearby part.**
2. **The nut should only be loosened, not removed.**

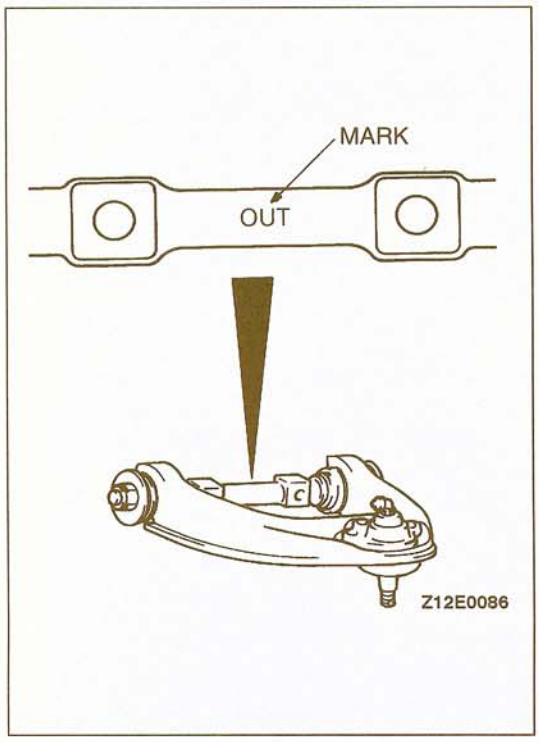


## INSTALLATION SERVICE POINTS

### ▶A◀ UPPER ARM INSTALLATION

Install the upper arm so that the "OUT" mark on the upper arm shaft is facing toward the outside of the vehicle.

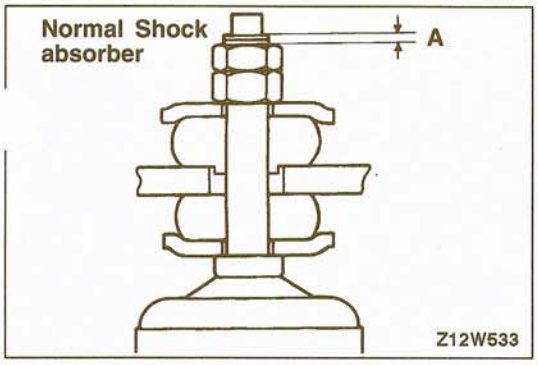


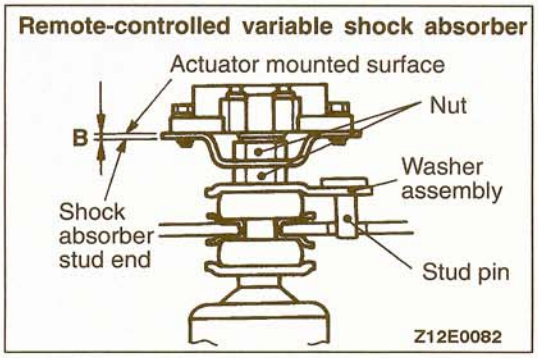


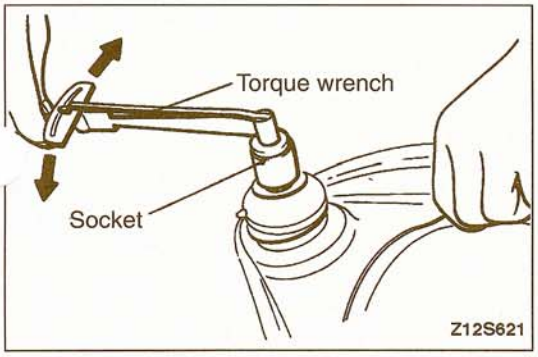


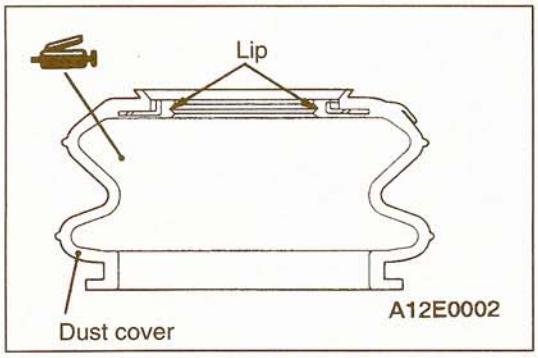


### ▶B◀ SHOCK ABSORBER/ACTUATOR (VEHICLES WITH REMOTE CONTROLLED VARIABLE SHOCK ABSORBER) INSTALLATION

Tighten the shock absorber installation nut so that the dimensions shown in the illustration (A and B) are at the standard values.

**Standard value**

**A: 1–2 mm (.04–.08 in.)**
**B: 1.5–2.5 mm (.06–.10 in.)**

**Caution**
**When tightening the nut, be careful not to bend the stud pin of the washer assembly.**

## INSPECTION

33200260012

### UPPER BALL JOINT STARTING TORQUE CHECK

1. Measure the upper ball joint starting torque with a torque wrench.

   **Standard value: 0.8–3.5 Nm (7–30 in.lbs.)**

2. If the upper ball joint starting torque is outside the standard value, replace the upper ball joint.

## BALL JOINT DUST COVER REPLACEMENT

33200800016

1. Remove the dust cover.
2. Apply multi-purpose grease to both the interior of dust cover and the upper ball joint.

# LOWER ARM

33200280018

## REMOVAL AND INSTALLATION

**Post-installation Operation**
- Wheel Alignment Inspection and Adjustment (Refer to P.33A-9.)

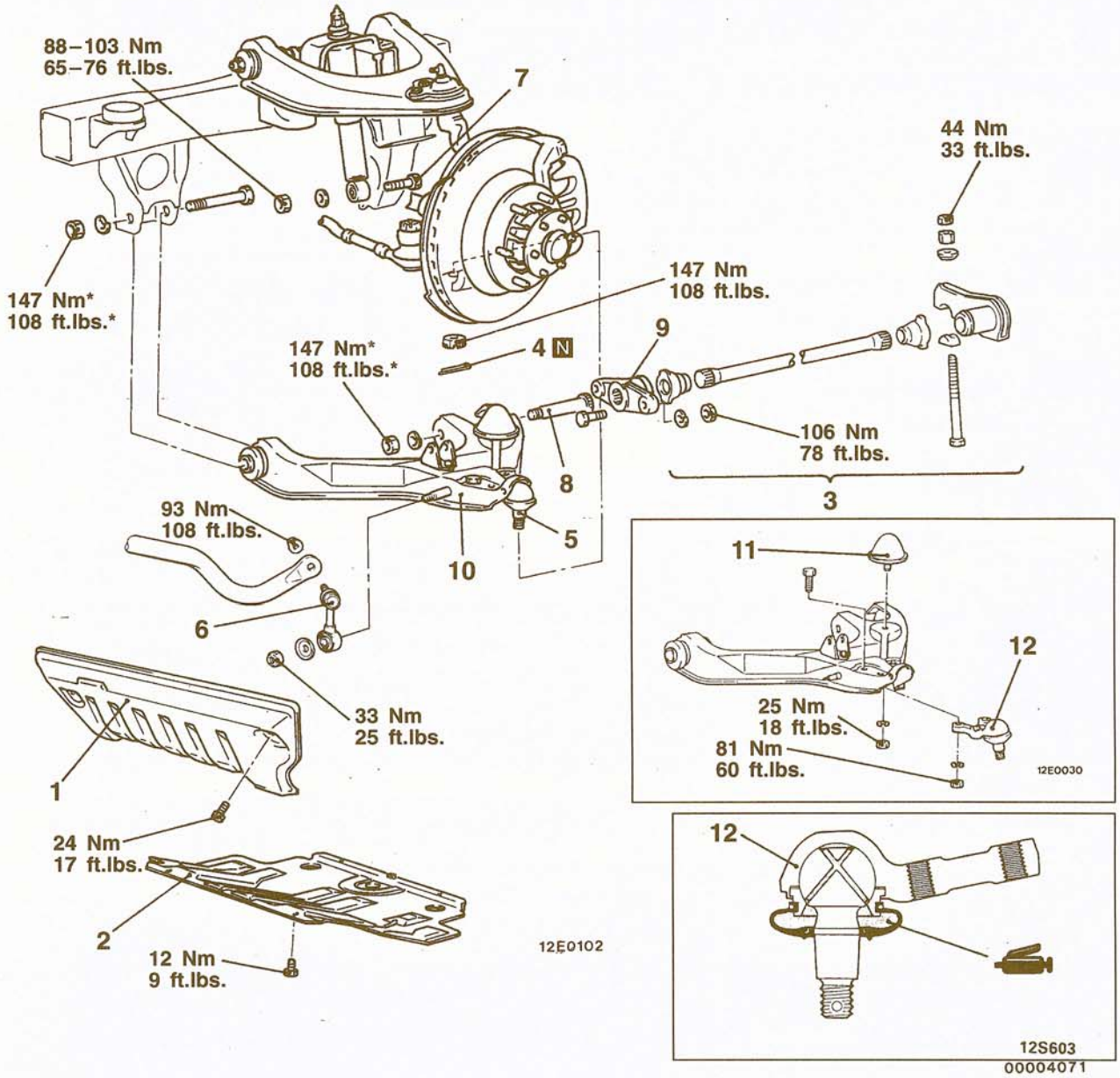


**Removal steps**

1. Under skid plate
2. Under cover
- Bump stopper and bump stopper bracket clearance adjustment (Refer to P.33A-18.)
3. Torsion bar (Refer to P.33A-17.)
4. Split pin
5. Lower ball joint and knuckle connection
6. Stabilizer link assembly (Refer to P.33A-19.)
7. Shock absorber mounting bolts
8. Lower arm shaft
9. Anchor arm B
10. Lower arm
11. Bump stopper
12. Lower ball joint

◀A▶

NOTE
*: Indicates part which should be temporarily tightened, and then fully tightened with the vehicle in the unladen condition.

**TSB Revision**

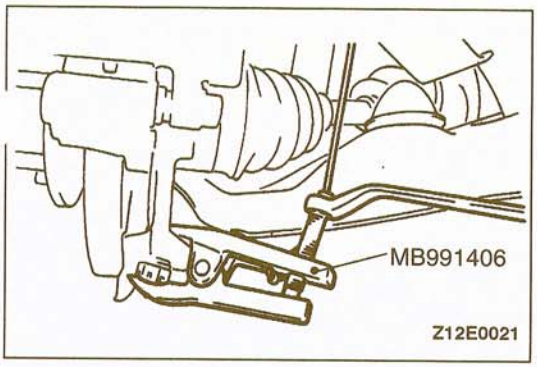


## REMOVAL SERVICE POINT

### ◀A▶ LOWER BALL JOINT AND KNUCKLE DISCONNECTION

Use the special tool to disconnect the lower arm ball joint from the knuckle.

**Caution**

1. **Be sure to tie the cord of the special tool to the nearby part.**
2. **The nut should only be loosened, not removed.**

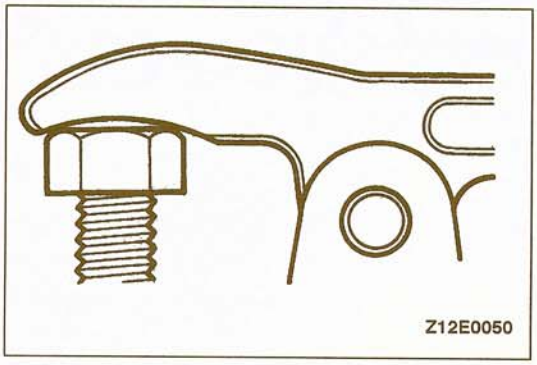


3. **Insert the special tool securely.**

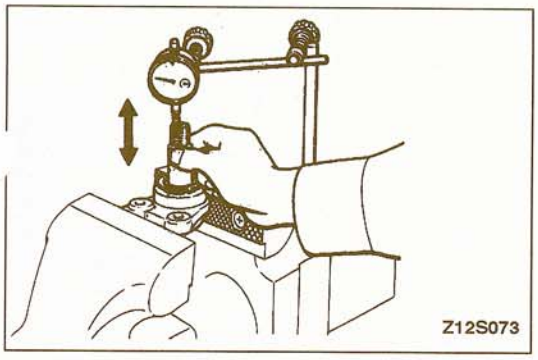


## INSPECTION

33200290011

### LOWER BALL JOINT END PLAY

Check the lower ball joint end play by the following procedure.

1. Use a dial indicator to measure the lower ball joint end play.

   **Limit: 0.3 mm (.012 in.)**

2. If the lower ball joint end play exceeds the service limit, replace the lower ball joint.

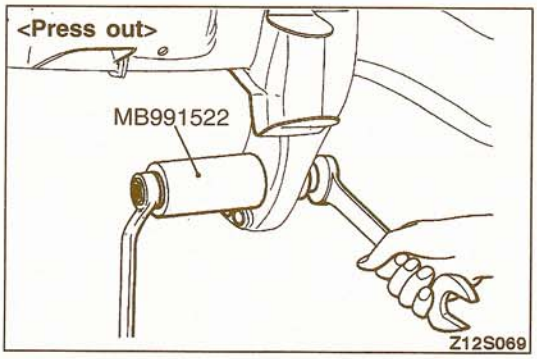


## LOWER ARM BUSHING (A) REPLACEMENT

33200810019

1. Using the special tool, remove the bushing A from the bracket.

   NOTE
   When removing the left hand bushing A detach the differential carrier.

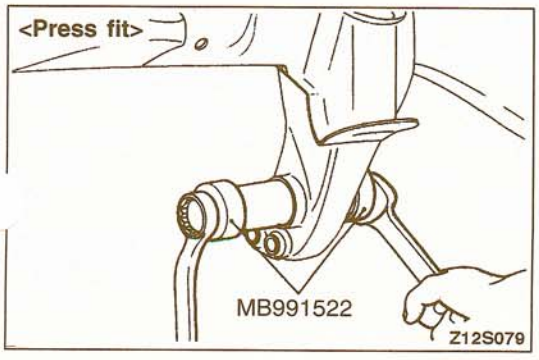


2. Using the special tool, press-fit the bushing A into the bracket.

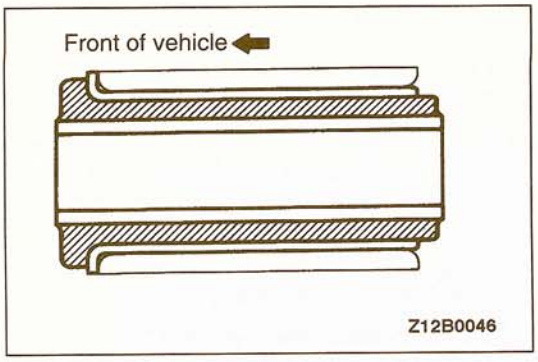


NOTE
Bushing (A) should be installed so that it faces as shown in the illustration.

## LOWER ARM BUSHING (B) REPLACEMENT

33200810026

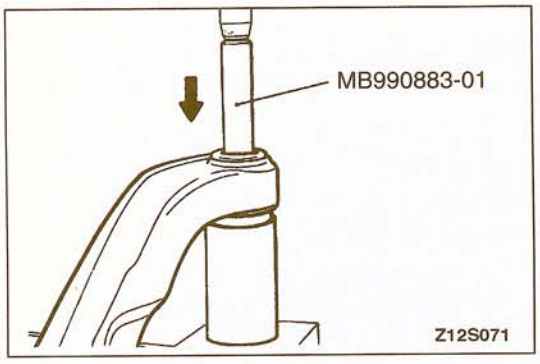


1. Use the special tools to remove bushing (B) from the lower arm.

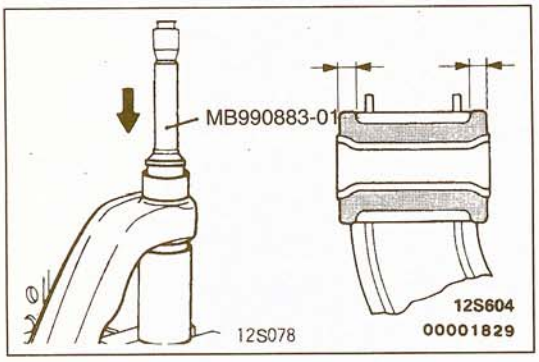


2. Coat bushing (B) and the lower arm with soap solution, and then use the special tool to press-fit bushing (B) into the lower arm, taking care not to twist or tilt bushing (B).

   NOTE
   Press-fit the bushing again from the opposite side to equalize bushing projections at both ends.

## LOWER BALL JOINT DUST COVER REPLACEMENT

33200820012

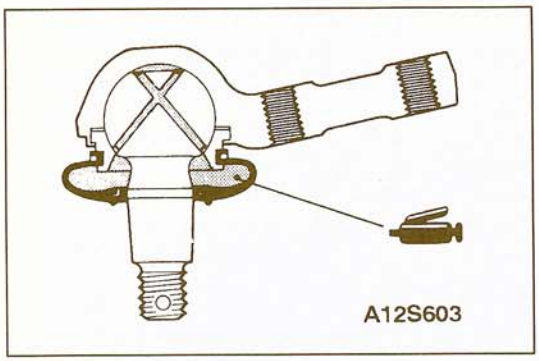


1. Apply multi-purpose grease to the inside of the dust cover and the lower ball joint.
2. Secure the dust cover to the lower ball join with a ring.

# TORSION BAR

33200340013

## REMOVAL AND INSTALLATION

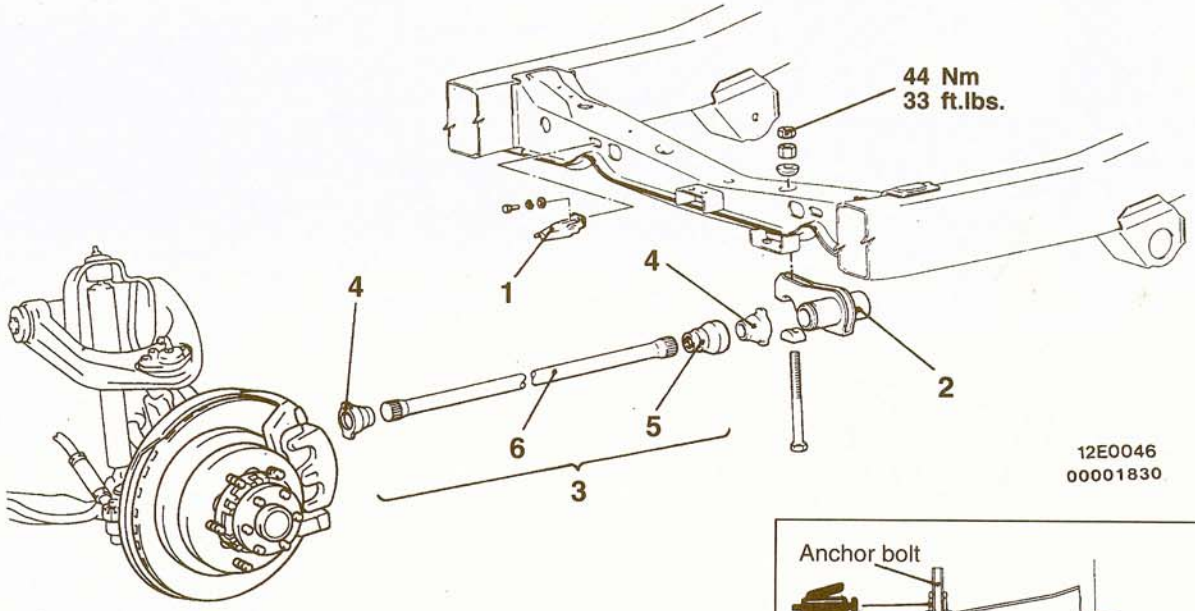


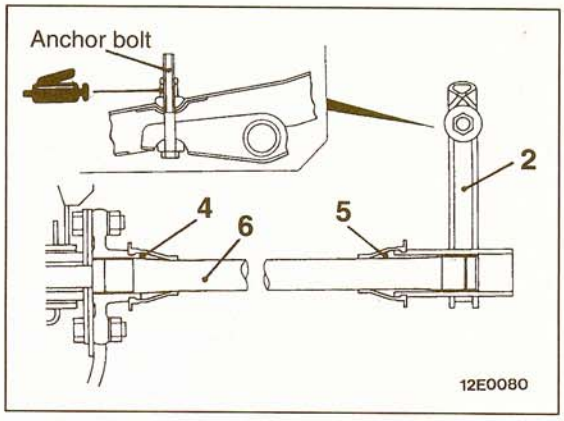


**Removal steps**

1. Heat protector (right side only)
▶B◀ • Bump stopper and bump stopper bracket clearance adjustment
2. Anchor arm assembly
▶A◀ 3. Torsion bar assembly
4. Dust covers
5. Heat cover (right side only)
6. Torsion bar

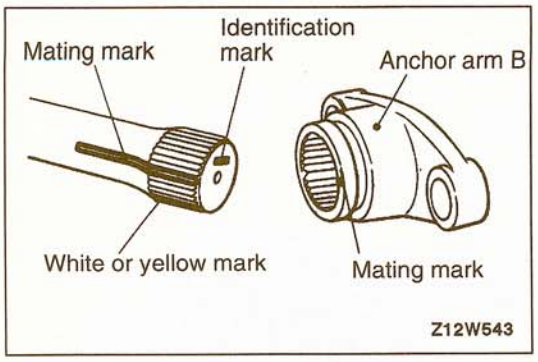


## INSTALLATION SERVICE POINTS

### ▶A◀ TORSION BAR ASSEMBLY INSTALLATION

(1) Check the identification marks at the end of the left ar right shock absorbers.
R → for right side
L → for left side

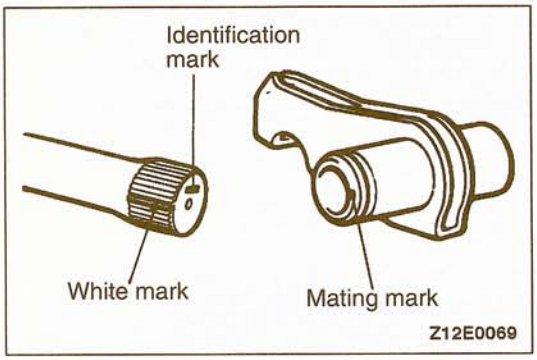


(2) When installing the torsion bar, align the white mark on the serrated section of the torsion bar with the mating mark on the anchor arm.

### ▶B◀ BUMP STOPPER AND BUMP STOPPER BRACKET CLEARANCE ADJUSTMENT

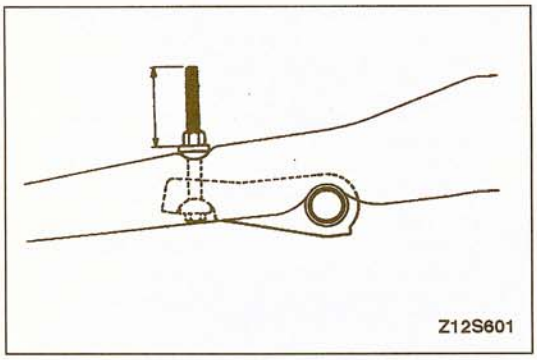


(1) Tighten the adjusting nut until the protruding length of the anchor bolt is 80 mm (3.15 in.) or less.

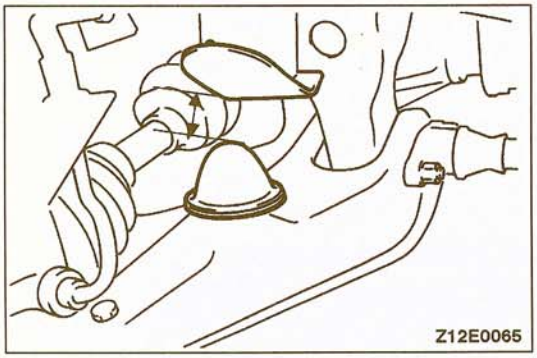


(2) With the vehicle in an unladen condition, measure the distance from the bump stopper to the bump stopper bracket to check if it is at the standard value.

**Standard value: 21–23 mm (.83–.91 in.)**

(3) If outside the standard value, adjust the anchor bolt with the adjusting nut.

# STABILIZER BAR

33200400018

## REMOVAL AND INSTALLATION

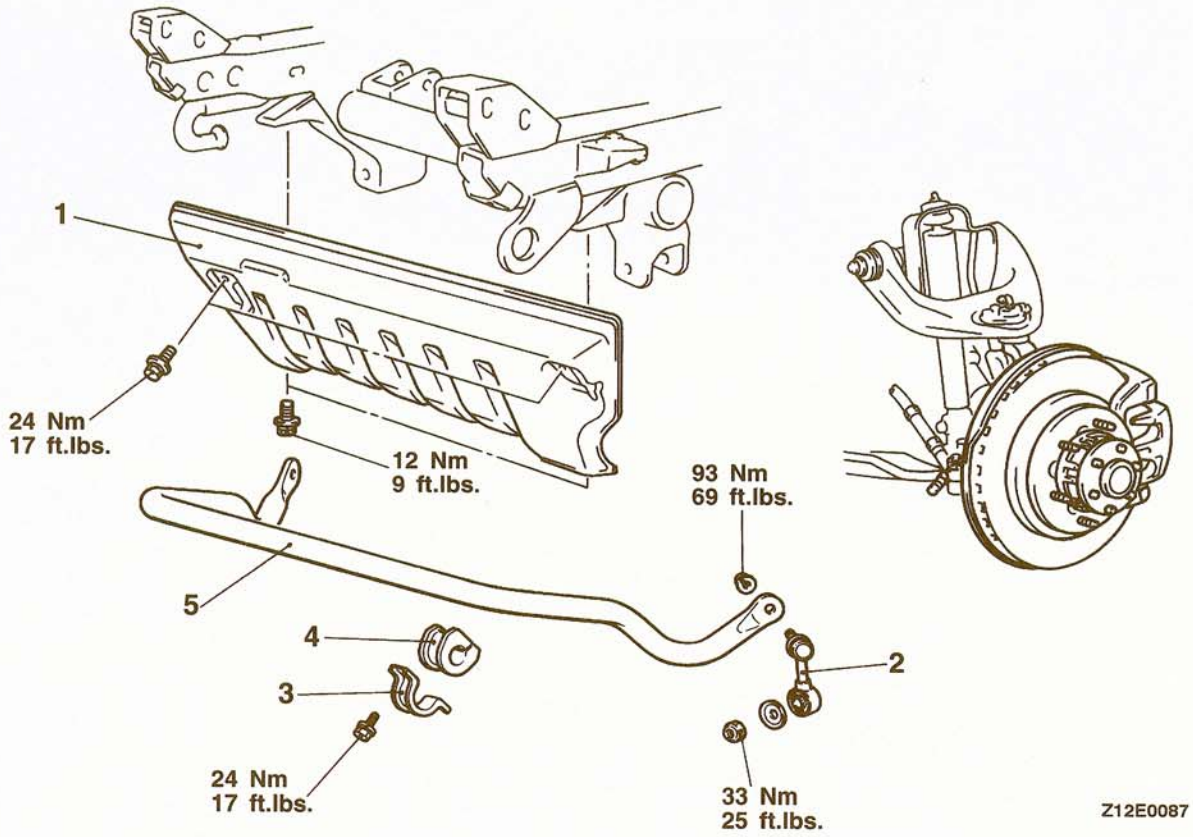


**Removal steps**

1. Under skid plate
2. Stabilizer link assembly
▶B◀ 3. Stabilizer bar bracket
▶A◀ 4. Bushing
5. Stabilizer bar

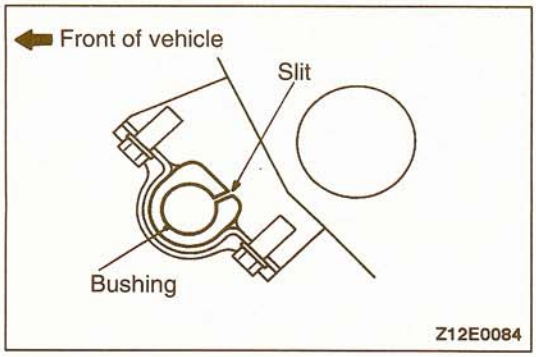


## INSTALLATION SERVICE POINTS

### ▶A◀ BUSHING INSTALLATION

Install the bushing so that the slit is in the position shown in the illustration.

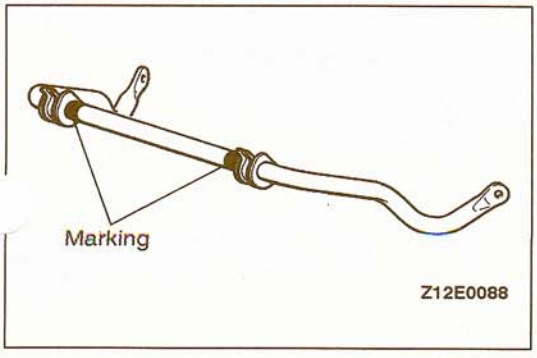


### ▶B◀ STABILIZER BAR BRACKET INSTALLATION

Position the stabilizer bar so that the marking on the stabilizer bar and the edge of the bracket becomes the reference value, and then tighten the stabilizer bar bracket mounting bolt.

**Reference value: Approx. 10 mm (.39 in.)**

**TSB Revision**

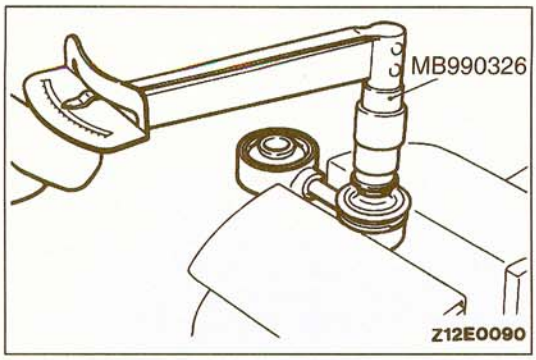


## INSPECTION

33200410011

**STABILIIZER LINK BALL JOINT FOR STARTING TORQUE CHECK**

**Standard value: 1.7–3.1 Nm (15–27 in.lbs.)**

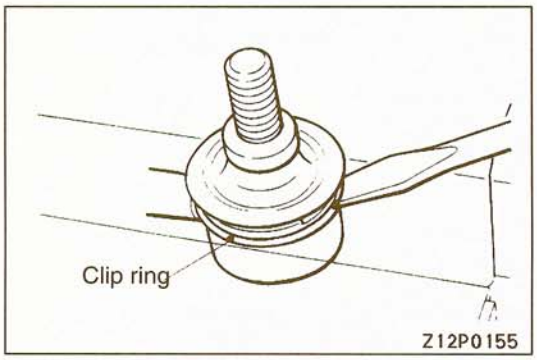


## BALL JOINT DUST COVER REPLACEMENT

33200830015

(1) Remove the clip ring and the dust cover.

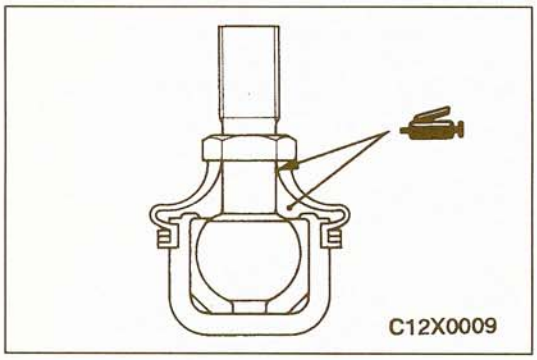


(2) Apply multi-purpose grease to the lip and inside of the dust cover.

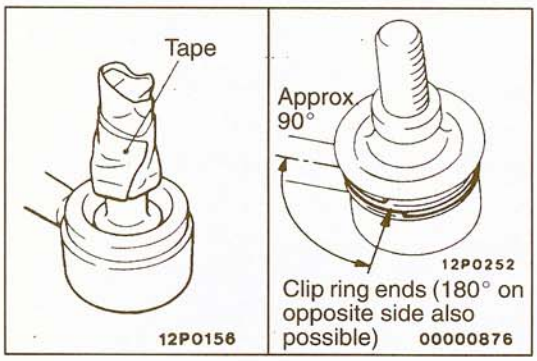


(3) Use vinyl tape to tape the stabilizer link where shown in the illustration, and then install the dust cover to the stabilizer link.

(4) Secure the dust cover with the clip ring.

NOTE
When installing the clip ring, align it so that its ends are located at a 90° angle from the axis of the stabilizer link.

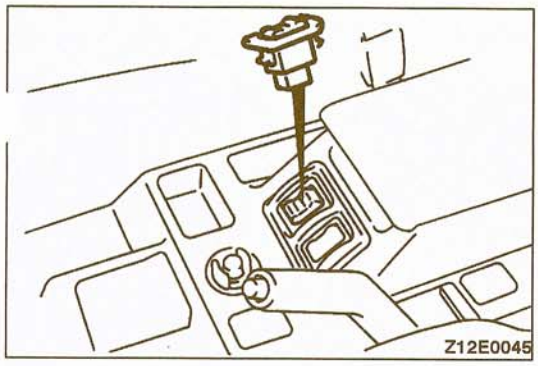


# CONTROL SWITCH

33200720015

## REMOVAL AND INSTALLATION

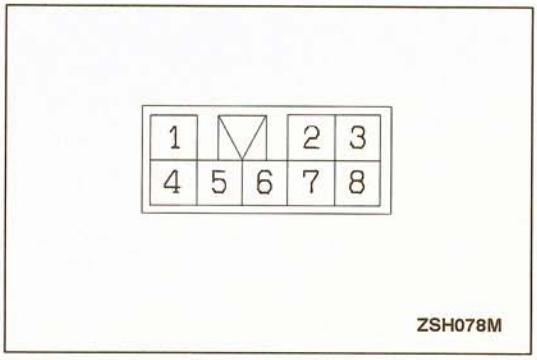


## INSPECTION

33200730018

Operate the switch and check the continuity between the terminals.

| Switch position | Terminal | | | | | |
|---|---|---|---|---|---|---|
| | 4 | 5 | 6 | 2 | 7 | 1 |
| H (Hard) | | | ○ | ○ | ILL | |
| M (Medium) | | ○ | | ○ | | |
| S (Soft) | ○ | | | ○ | | |

# CONTROL UNIT

33200750014

## REMOVAL AND INSTALLATION

**Pre-removal and Post-installation Operation**
- Quarter Trim Lower Removal and Installation (Refer to GROUP 52A – Trims.)




1. Control unit

## INSPECTION

33200760017

Refer to TROUBLESHOOTING.

NOTES

# REAR SUSPENSION

## CONTENTS

34109000053


COIL SPRING AND AXLE BUMPER ..... 8
GENERAL SPECIFICATIONS ..... 2
LOWER ARM ..... 4
Lower Arm Rear Bushing Replacement ..... 5
ON-VEHICLE SERVICE ..... 3
Rear Wheel Alignment ..... 3
SERVICE SPECIFICATIONS ..... 2
SHOCK ABSORBER AND LATERAL ROD ... 6
Lateral Rod Bushing Replacement ..... 7
SPECIAL TOOLS ..... 3
STABILIZER BAR ..... 9
TROUBLESHOOTING ..... 3

# GENERAL SPECIFICATIONS

34100020010

## SUSPENSION TYPE

| Items | Specifications |
|---|---|
| Suspension system | Coil spring type 3-link rigid axle suspension |

## COIL SPRING

| Items | Specifications |
|---|---|
| Wire dia.×O.D.×free length mm (in.) | 14.2 to 15.8×160.2 to 161.8×404.5 (.56 to .62×6.31 to 6.37×15.93) |
| Coil spring identification color | Green×1 |
| Spring constant N/mm (lbs./in.) | 27 to 39 (151 to 218) |

## SHOCK ABSORBER

| Items | | Vehicles without remote-controlled variable shock absorbers | Vehicles with remote-controlled variable shock absorbers |
|---|---|---|---|
| Max. length mm (in.) | | 457 (18.0) | 457 (18.0) |
| Min. length mm (in.) | | 297 (11.7) | 297 (11.7) |
| Stroke mm (in.) | | 160 (6.3) | 160 (6.3) |
| Damping force [at 0.3 m/sec. (0.9 ft./sec.)] N (lbs.) | Expansion | 2,450 (540) | Hard: 3,350 (739)<br>Medium: 2,450 (540)<br>Soft: 1,750 (386) |
| | Contraction | 1,300 (287) | Hard: 1,650 (364)<br>Medium: 1,300 (287)<br>Soft: 900 (198) |

# SERVICE SPECIFICATIONS

34100030068

| Items | Standard value |
|---|---|
| Toe-in mm (in.) | 0 (Non-adjustable) |
| Camber | 0° (Non-adjustable) |
| Protruding length of stabilizer bar mounting bolt mm (in.) | 15–17 (.59–.67) |
| Protruding length of shock absorber mounting bolt mm (in.) | 1–2 (.04–.08) |
| Distance between actuator mounting surface and shock absorber stud end mm (in.) | 1.5–2.5 (.06–.10) |

TSB Revision

## SPECIAL TOOLS

34100060050

| Tool | Tool number and name | Supersession | Application |
|---|---|---|---|
|  | MB991293<br>Rear suspension bushing arbor | – | Removal and installation of lower arm rear bushing |
| 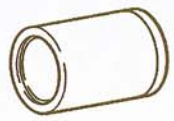 | MB990891<br>Bushing remover installer base | – | |
|  | MB991318<br>Lower arm bushing arbor | – | |
| 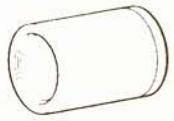 | MB990971<br>Bushing remover installer base | – | |
|  | MB991411<br>Rear wheel bearing and hub installer joint | – | |
|  | MB990650<br>Lower arm bushing arbor | – | Removal and installation of lateral rod bushing |

## TROUBLESHOOTING

34100070039

Refer to GROUP 33A–Troubleshooting.

## ON-VEHICLE SERVICE

33100100052

### REAR WHEEL ALIGNMENT

The rear suspension assembly must be free of worn, loose or damaged parts prior to measurement of rear wheel alignment.

**Standard value:**
**Toe-in 0 mm (0 in.)**
**Camber 0°**

NOTE
Toe-in and camber are set at the factory and cannot be adjusted.

# LOWER ARM

34100880014

## REMOVAL AND INSTALLATION

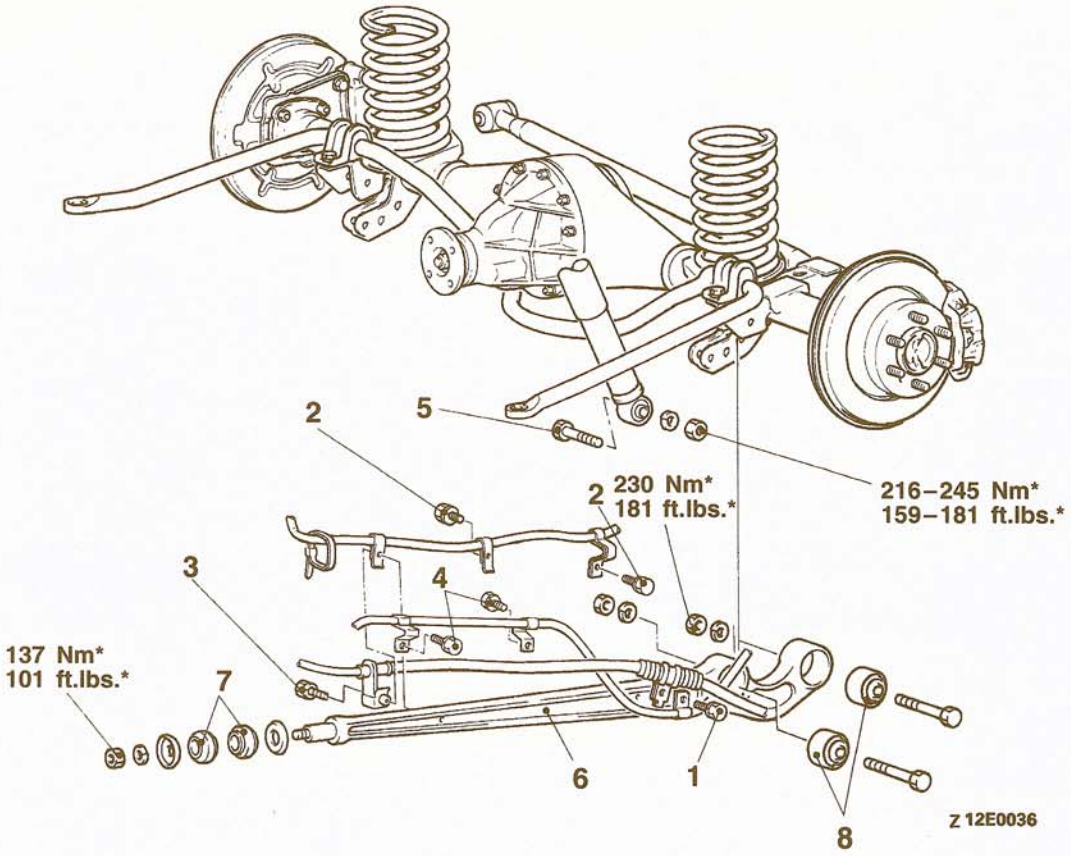


**Removal steps**

1. Parking brake cable attaching bolt
2. Rear differential lock position harness attaching bolt
3. Parking brake cable attaching bolt
4. Rear sensor attaching bolt (Vehicles with A.B.S.)
5. Shock absorber mounting bolts (lower side)
6. Lower arm
- ▶A◀ 7. Lower arm front bushing
8. Lower arm rear bushing

NOTE

*: Indicates part which should be temporarily tightened, and then fully tightened with the vehicle in the unladen condition.

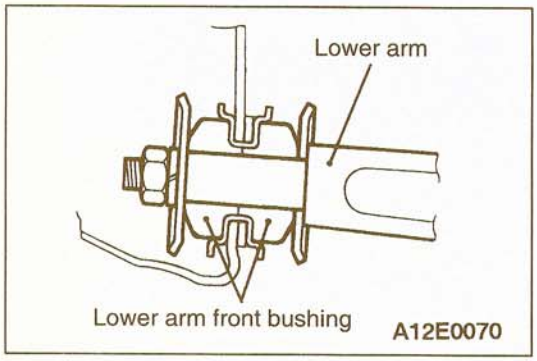


## INSTALLATION SERVICE POINT

### ▶A◀ LOWER ARM FRONT BUSHING INSTALLATION

Install the lower arm front bushing so that its direction will be as shown in the illustration.

TSB Revision

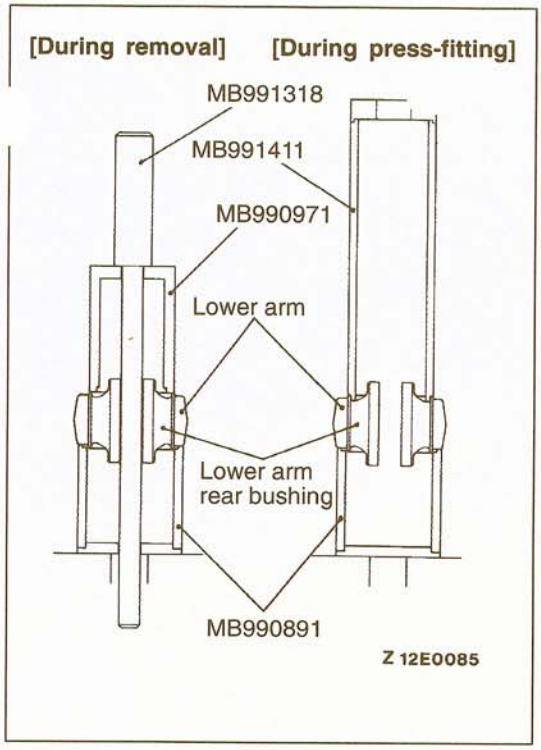


## LOWER ARM REAR BUSHING REPLACEMENT

34101110013

Use the special tool to replace the lower arm rear bushing.

# SHOCK ABSORBER AND LATERAL ROD

34100910010

## REMOVAL AND INSTALLATION

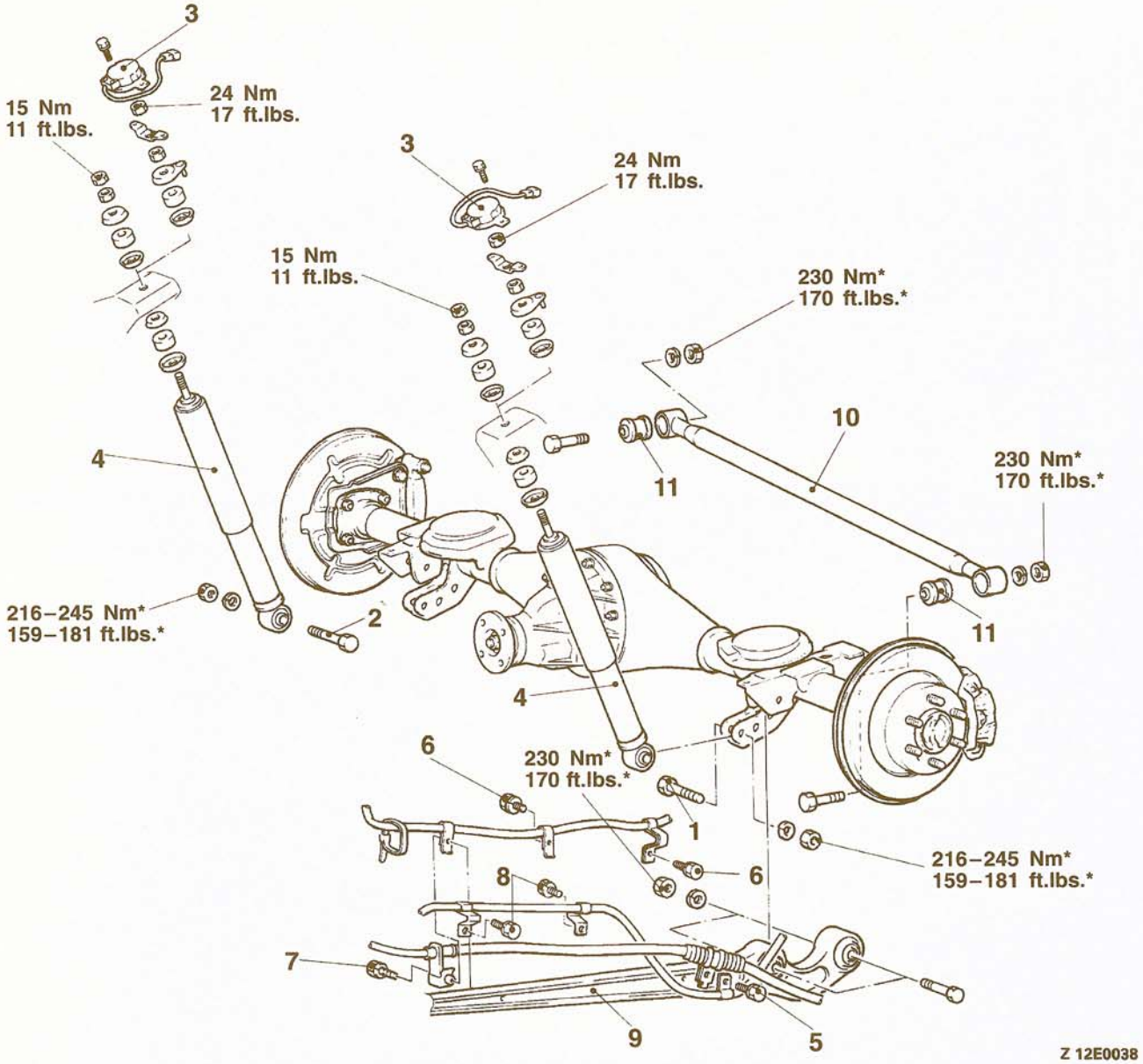


**Shock absorber removal steps**

1. Shock absorber mounting bolt (lower left side)
2. Shock absorber mounting bolt (lower right side)
- ▶A◀ 3. Actuator (Vehicles with remote-controlled variable shock absorbers)
- ▶A◀ 4. Shock absorber

**Lateral rod removal steps**

1. Shock absorber mounting bolt (lower left side)
5. Parking brake cable attaching bolt (LH side)
6. Rear differential lock position harness attaching bolt
7. Parking brake cable attaching bolt (LH side)
8. Rear sensor attaching bolt (Vehicles with A.B.S.)
9. Lower arm
10. Lateral rod
11. Lateral rod bushing

NOTE

*: Indicates part which should be temporarily tightened and then fully tightened with the vehicle in the unladed condition.

TSB Revision

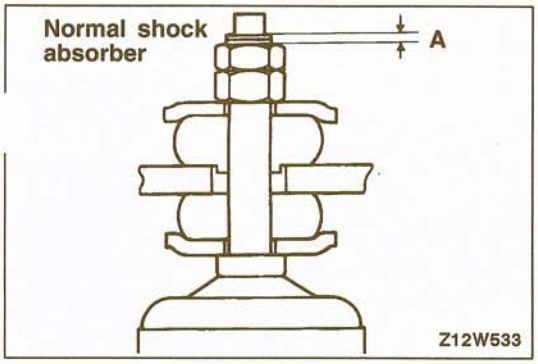


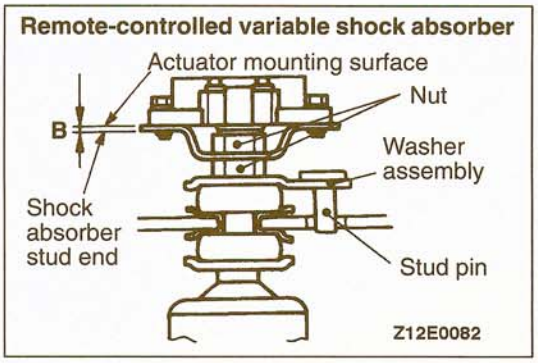


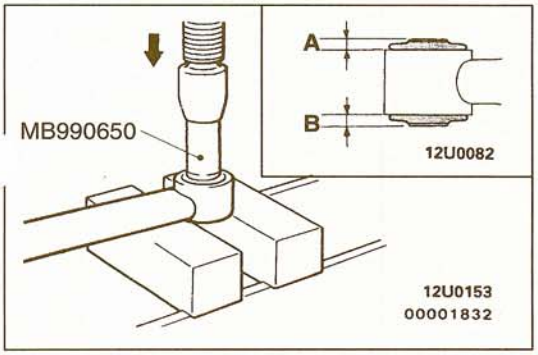


## INSTALLATION SERVICE POINT

**▶A◀ SHOCK ABSORBER/ACTUATOR (VEHICLES WITH REMOTE CONTROLLED VARIABLE SHOCK ABSORBERS) INSTALLATION**

Tighten the nut so that the values shown in the figure (A and B) are at the standard values.

**Standard value**

**(A): 1–2 mm (.04–.08 in.)**
**(B): 1.5–2.5 mm (.06–.10 in.)**

**Caution**
**When tightening the nut, be careful not to bend the stud pin of the washer assembly.**

## LATERAL ROD BUSHING REPLACEMENT

34101120016

(1) Use the special tool to drive out and press in the lateral rod bushing.
(2) Be careful that the difference (A – B) in bushing projection distances does not exceed the following value.

A – B = 0±1.0 mm (0±.04 in.)

**Caution**
**When pressing in the bushing, apply a sufficient amount of liquid soap to the inside of the lateral rod eyes and the rubber area of the bushing.**

# COIL SPRING AND AXLE BUMPER

34100940019

## REMOVAL AND INSTALLATION

**Post-installation Operation**
- Brake Fluid Filling and Air Bleeding
  (Vehicles without A.B.S.: Refer to GROUP 35A – On-vehicle Service.)
  (Vehicles with A.B.S.: Refer to GROUP 35C – On-vehicle Service.)

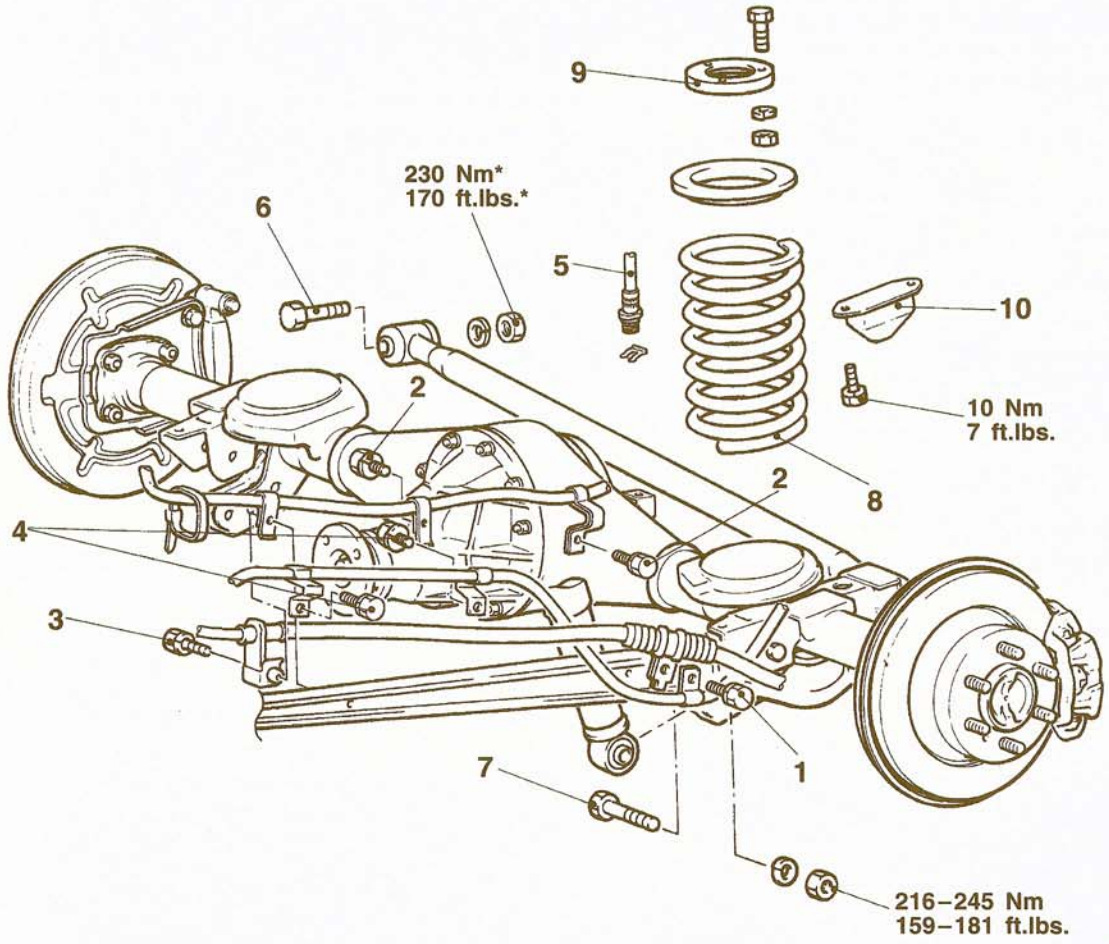


Z 12E0037

**Removal steps**

1. Parking brake cable attaching bolt
2. Rear differential lock position harness attaching bolt
3. Parking brake cable attaching bolt
4. Rear sensor attaching bolt (Vehicles with A.B.S.)
5. Brake hose connection
6. Lateral rod mounting bolt (body side only)

◀A▶

7. Shock absorber mounting bolt (lower side only)
8. Coil spring
9. Rear spring pad
10. Helper rubber

NOTE
*: Indicates part which should be temporarily tightened, and then fully tightened with the vehicle in the unladen condition.

## REMOVAL SERVICE POINT

### ◀A▶ COIL SPRING REMOVAL

Slowly lower the jack supporting the axle housing, and remove the coil spring and rear spring pad.

**TSB Revision**

# STABILIZER BAR

34100970018

## REMOVAL AND INSTALLATION

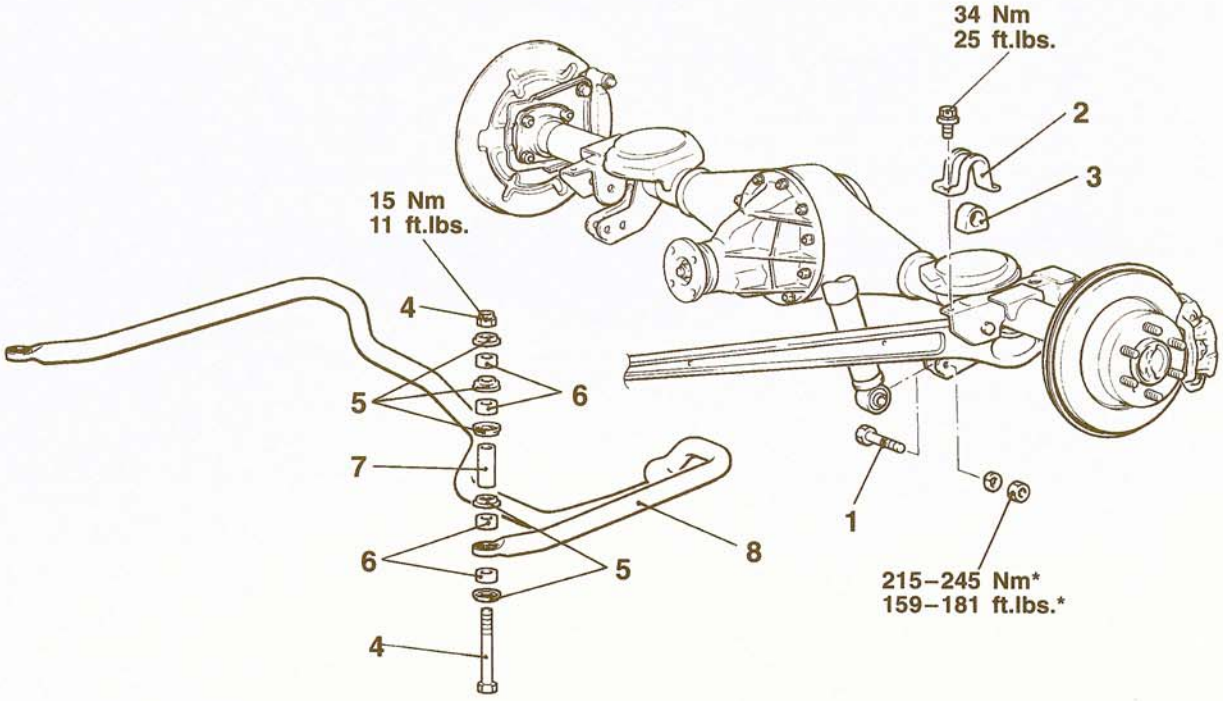


Z 12E0089

**Removal steps**

1. Shock absorber mounting bolts (lower side)
2. Bracket C
3. Bushing B
- ▶A◀ 4. Stabilizer bar mounting bolt and nut
5. Joint cup
6. Rubber bushing
7. Collar
8. Stabilizer bar

NOTE
*: Indicates part which should be temporarily tightened, and then fully tightened with the vehicle in the unladen condition.

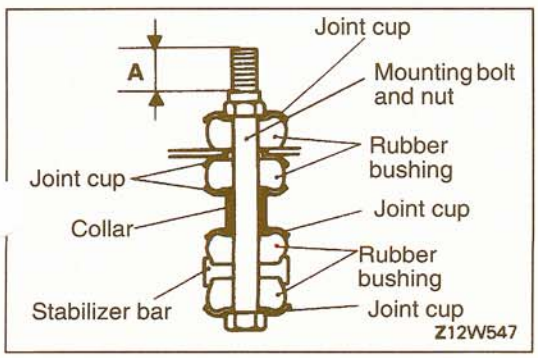


Z12W547

## INSTALLATION SERVICE POINT

### ▶A◀ STABILIZER BAR MOUNTING BOLT AND NUT INSTALLATION

(1) To install the stabilizer bar, assemble the joint cups and rubber bushings by the order and the certain direction as shown in the figure.
(2) Install the nut on the stabilizer bar mounting bolt to the specified dimensions.

**Standard value (A): 15–17 mm (.59–.67 in.)**

TSB Revision

NOTES

# STEERING

## CONTENTS

37209000071


| | |
|---|---|
| STEERING | 37A |
| 4-WHEEL STEERING SYSTEM (4WS) | 37B |
| 4-WHEEL STEERING SYSTEM (ACTIVE 4WS) | 37C |


NOTE
The tinted sections are not included in this manual.

NOTES

# STEERING

## CONTENTS

37209000088


**GENERAL SPECIFICATIONS ..... 2**

**LUBRICANTS ..... 3**

**ON-VEHICLE SERVICE ..... 7**

- Air Bleeding ..... 11
- Ball Joint End Play Check ..... 7
- Drive-Belt Tension Check ..... 9
- Fluid Level Check ..... 10
- Fluid Replacement ..... 10
- Oil Pump Pressure Test ..... 12
- Power Steering Pressure Switch Check ..... 13
- Stationary Steering Effort Check ..... 8
- Steering Angle Check ..... 8
- Steering Gear Backlash Check ..... 7
- Steering Wheel Free Play Check ..... 7
- Steering Wheel Return (to Center) Check ..... 9
- Tie Rod End Ball Joint Starting Torque Check ..... 8

**POWER STEERING GEAR BOX* ..... 18**

**POWER STEERING OIL PUMP ..... 28**

**SEALANTS AND ADHESIVES ..... 3**

**SERVICE SPECIFICATIONS ..... 2**

**SPECIAL TOOLS ..... 4**

**STEERING COLUMN AND SHAFT* ..... 14**

**STEERING HOSES ..... 33**

**STEERING LINKAGE ..... 35**

**TROUBLESHOOTING ..... 5**


**WARNINGS REGARDING SERVICING OF SUPPLEMENTAL RESTRAINT SYSTEM (SRS) EQUIPPED VEHICLES**

**WARNING!**

**(1) Improper service or maintenance of any component of the SRS, or any SRS-related component, can lead to personal injury or death to service personnel (from inadvertent firing of the air bag) or to the driver and passenger (from rendering the SRS inoperative).**

**(2) Service or maintenance of any SRS component or SRS-related component must be performed only at an authorized MITSUBISHI dealer.**

**(3) MITSUBISHI dealer personnel must thoroughly review this manual, and especially its GROUP 52B – Supplemental Restraint System (SRS) and GROUP 00 – Maintenance Service before beginning any service or maintenance of any component of the SRS or any SRS-related component.**

NOTE

The SRS includes the following components: impact sensors, SRS diagnosis unit, SRS warning light, air bag module, clock spring, and interconnecting wiring. Other SRS-related components (that may have to be removed/installed in connection with SRS service or maintenance) are indicated in the table of contents by an asterisk (*).

## GENERAL SPECIFICATIONS

37200010066

| Items | | Specifications |
|---|---|---|
| Steering wheel diameter mm (in.) | | 390 (15.35) |
| Power steering gear box | Steering gear type | Ball and nut, torsion bar type (integral type) |
| | Steering gear ratio | 16.4–18.0 |
| Oil Pump | Oil pump type | Vane type |
| | Displacement $cm^3$/rev. (cu.in./rev.) | 9.6 (.59) |

## SERVICE SPECIFICATIONS

37200030062

| Items | | Standard value | Limit |
|---|---|---|---|
| Steering wheel free play mm (in.) | | 26.6 (1.05) or less | 50 (1.97) |
| Steering gear backlash mm (in.) | | – | 0.5 (.020) |
| Ball joint end play mm (in.) | | – | 1.5 (.059) |
| Steering angle | Inner wheel | 29°40' – 32°40' | – |
| | Outer wheel | 29°45' | – |
| Stationary steering effort N (lbs.) | | 37 (8.21) | – |
| Drive belt tension mm (in.) <3.0L-12 VALVE engine> | When checked | 9.0–14.5 (.354–.571) | – |
| | When an old belt is installed | 10.0 (.394) | – |
| | When a new belt is installed | 8.0 (.315) | – |
| Drive belt tension mm (in.) <3.0L-24 VALVE engine> | When checked | 10.5–14.5 (.413–.571) | – |
| | When an old belt is installed | 11.5–13.5 (.452–.531) | – |
| | When a new belt is installed | 9.5–11.5 (.374–.452) | – |
| Drive belt tension mm (in.) <3.5L engine> | When checked | 13.0–17.0 (.512–.669) | – |
| | When an old belt is installed | 14.0–16.0 (.551–.630) | – |
| | When a new belt is installed | 11.0–13.0 (.433–.512) | – |
| Oil pump pressure MPa (psi) <3.0L-12 VALVE engine> | Oil pump relief pressure | 7.35–8.04 (1,067–1,166) | – |
| | Pressure under no-load conditions | 0.78–0.98 (114–142) | – |
| | Steering gear retention hydraulic pressure | 7.35–8.04 (1,067–1,166) | – |
| Oil pump pressure MPa (psi) <3.0L-24 VALVE engine, 3.5L engine> | Oil pump relief pressure | 8.31–9.00 (1,205–1,305) | – |
| | Pressure under no-load conditions | 0.78–0.98 (114–142) | – |
| | Steering gear retention hydraulic pressure | 8.31–9.00 (1,205–1,305) | – |
| Pressure switch activation oil pressure MPa (psi) | OFF→ON | 1.47–1.96 (213–284) | – |
| | ON→OFF | 0.69–1.18 (100–171) | – |
| Backlash between ball groove of rack piston and balls mm (in.) | | – | 0.05 (.0020) |

**TSB Revision**

| Items | | Standard value | Limit |
|---|---|---|---|
| Mainshaft end play mm (in.) | | 0.03 (.0012) or less | – |
| Cross-shaft end play mm (in.) | | 0 – 0.05 (0 – .002) | – |
| Mainshaft total starting torque Nm (in.lbs.) | | 0.45 – 1.25 (4 – 11) | – |
| Clearance between oil pump drive shaft and pump body mm (in.) | | – | 0.1 (.004) |
| Gap between vane and rotor groove mm (in.) | | – | 0.06 (.0024) |
| Ball joint starting torque Nm (in.lbs.) | Tie rod end | 1 – 3 (9 – 26) | – |
| | Idler arm | 0.5 – 2.0 (4 – 17) | – |
| | Pitman arm | 1 – 3 (9 – 26) | – |
| Idler arm turning torque Nm (in.lbs.) | | 0.3 – 2.0 (3 – 17) | – |
| Spring balance reading N (lbs.) | | 2.3 – 15.4 (.5 – 33.9) | – |

## LUBRICANTS

37200040058

| Items | | Specified lubricant | Quantity |
|---|---|---|---|
| Power steering fluid | | MITSUBISHI PLUS ATF/Automatic transmission fluid "DEXRON" or "DEXRON II" | 1.06 $dm^3$ (1.12 qts.) |
| Power steering gear box | Bearing, O-ring and oil seal | MITSUBISHI PLUS ATF/Automatic transmission fluid "DEXRON" or "DEXRON II" | As required |
| Oil pump | Flow control valve and O-ring | MITSUBISHI PLUS ATF/Automatic transmission fluid "DEXRON" or "DEXRON II" | As required |
| | Friction surface of rotor, vane, cam ring and pump cover | | |

## SEALANTS AND ADHESIVES

37200050044

| Items | Specifications |
|---|---|
| Steering column cover assembly installation hole | 3M ATD Part No. 8663 or equivalent |
| Dash panel cover installation surface | |
| Tie-rod end dust cover installation surface | |
| Inside of steering column lower pipe bearing | 3M Stud Locking Part No. 4170 or equivalent |
| Connecting the steering column upper and steering column lower (nut side) | |
| Steering column upper bearing | 3M ATD Part No. 8001 or equivalent |

# SPECIAL TOOLS

37200060061

| Tool | Tool number and name | Supersession | Application |
|---|---|---|---|
|  | MB991113 or MB990635<br>Steering linkage puller | MB991113-01 | Disconnecting the pitman arm and relay rod<br>Disconnecting the idler arm and relay rod<br>Disconnecting the tie rod and knuckle |
| 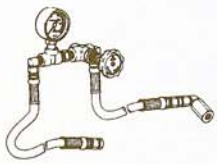 | MB990662<br>Oil pressure gage | MB990662-01 | Measuring the oil pump pressure |
|  | MB990993<br>Oil pressure gage adapter (pump side) | MB990993-01 | |
|  | MB990994<br>Oil pressure gage adapter (hose side) | MB990994-01 | |
|  | MB990803<br>Steering wheel puller | General service tool | Steering wheel removal |
| 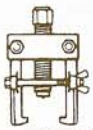 <br>00004366 | MB990809<br>Pitman arm puller | MB990809-01 | Removing the pitman arm |
|  <br>00004350 | MB990925<br>Bearing and oil seal installer set | MB990925-01 | Installing the oil seal and ball bearing (Refer to GROUP 26.)<br>MB990928-01, MB990926-01 |
|  | MB990938<br>Handle | MB990938-01 | |
|  | MB991203<br>Oil seal and bearing installer | | |

TSB Revision

| Tool | Tool number and name | Supersession | Application |
|---|---|---|---|
|  | MB990228<br>Preload socket | MB990228-01 | Measuring the main shaft total starting torque |
|  | MB991367<br>Special spanner | | Removing and installing the lock nut |
|  | MB991394<br>Pin set | | |

# TROUBLESHOOTING

37200070040

| Trouble Symptom | Probable Cause | Remedy |
|---|---|---|
| Excessive play of steering wheel | Excessive play in steering gear box | Repair |
| | Loose steering gear mounting bolts | Retighten |
| | Loose or worn stud of tie rod end | Retighten or replace as necessary. |
| Difficult steering wheel operation (insufficient power assist) | Loose belt | Adjust the belt tension. |
| | Damaged belt | Replace the belt. |
| | Low fluid level | Refill with fluid. |
| | Air in fluid line | Bleed the system. |
| | Twisted or damage hoses | Correct the hose routing or replace the hoses. |
| | Fluid leakage | Check the fluid leakage. |
| | Malfunction of gear box | Check and replace the gear box if necessary. |
| | Malfunction of oil pump | Check the oil pump pressure and repair the oil pump. |
| Rattling noise | Loose installation of oil pump or gear box | Retighten the oil pump or gear box. |
| | Interference around column or between pressure hose and other parts | Correct or replace the pressure hose and the parts around the column. |
| | Abnormal noise inside gear box and oil pump | Replace the gear box or oil pump. |
| Shrill noise | Air sucked into oil pump | Check the oil level and hose clips, bleed the system or replace the oil pump. |
| | Oil pump seizure | Replace the oil pump. |
| Squealing noise | Loose belt | Adjust the belt tension. |
| | Oil pump seizure | Replace the oil pump. |

**TSB Revision**

| Trouble Symptom | Supersession | Application |
|---|---|---|
| Hissing noise | Air sucked into oil pump | Check the oil level and hose clips or bleed the system. |
| | Damage to the olive of the gear box port section | Replace the gear box. |
| | Malfunction of return hose | Replace the hose. |
| Whistling noise | Malfunction of gear box port section | Replace the gear box. |
| Droning noise | Loose mounting bolt on oil pump or oil pump bracket | Retighten the pump bracket or pump mounting bolt. |
| | Poor condition of oil pump body* | Replace the oil pump. |
| Squeaking noise | Malfunction of steering stopper contact | Check and adjust the steering stopper. |
| | Interference of wheel with vehicle body | Adjust the steering angle. |
| | Malfunction of gear box | Replace the gear box. |
| Vibration** | Air suction | Bleed the system. |
| | Malfunction of gear box | Replace the gear box. |
| Oil leakage from hose connection | Improperly tightened flare nut | Repair or replace |
| | Incorrectly inserted hose | |
| | Improperly clamped hose | |
| Oil leakage from hose assembly | Damaged or clogged hose<br>Malfunction of hose connector | Replace |
| Oil leakage from oil reservoir | Improperly welded pipe | Weld the pipe or replace. |
| | Overflow | Bleed the system or adjust the oil level. |
| Oil leakage from oil pump | Malfunction of oil pump housing | Replace the oil pump. |
| | Malfunction of O-ring and/or oil seal | Replace the O-ring and oil seal. |
| Oil leakage from gear box | Malfunction of gear box housing (including leakage from air hole) | Replace the gear box. |
| | Malfunction of O-ring and/or oil seal | Replace the O-ring and oil seal. |

NOTE
* A slight "beat noise" is produced by the oil pump; this is not a malfunction. (This noise occurs particularly when a stationary steering effort is made.)
** A slight vibration may be felt when the stationary steering effort is made due to the condition of the road surface. To check whether the vibration actually exists or not, test-drive the vehicle on a dry concrete or asphalt surface. Moreover, a very slight amount of vibration is not a malfunction.

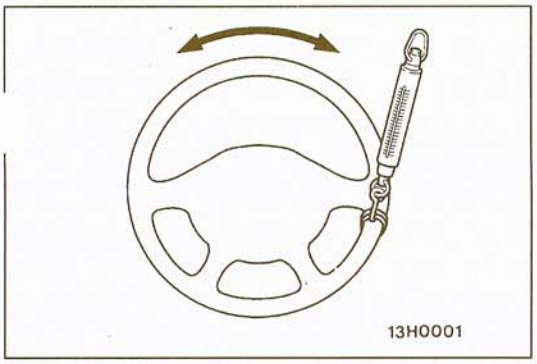


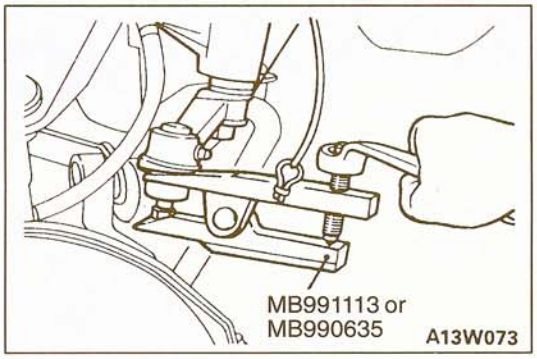


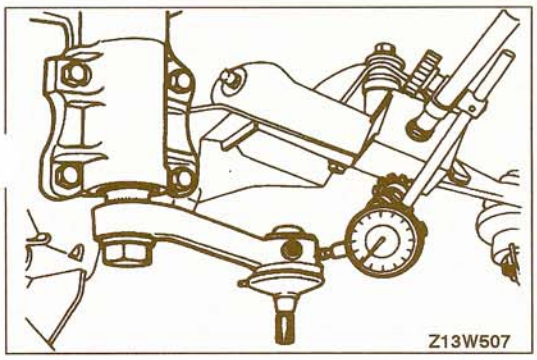


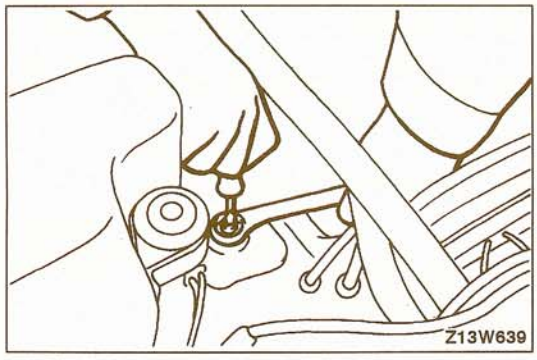


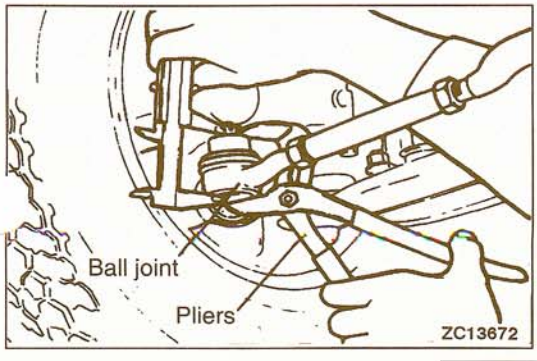


# ON-VEHICLE SERVICE

37200100053

## STEERING WHEEL FREE PLAY CHECK

1. When the engine is stopped and the steering wheel is in the straight-ahead position, apply a force of 5N (1.1 lbs.) to the steering wheel in the peripheral direction. Measure the play on the circumference of the steering wheel.

   **Standard value: 26.6 mm (1.05 in.) or less**

   **Limit: 50 mm (1.97 in.)**

2. If the measured value exceeds the repair limit, check the steering gear backlash and linkage ball joint end play.

## STEERING GEAR BACKLASH CHECK

37200130014

1. Jack up the vehicle front and hold the steering wheel in the straight-ahead position.
2. Use the special tool to disconnect the pitman arm from the relay rod.

   **Caution**
   1. **Use cord to bind the special tool closely so it won't become separated.**
   2. **The nut should only be loosened, not removed.**

3. Use a dial indicator to measure the steering gear backlash at the pitman arm top end.

   **Limit: 0.5 mm (.020 in.)**

4. If the measured value exceeds the limit, screw in the steering gear box adjusting bolt until the steering wheel play is within the standard value range.

   **Caution**
   1. **Be sure to make the adjustment with the steering wheel in the straight-ahead position.**
   2. **If the adjusting bolt is overtightened, more steering effort will be required, and return of the wheel will be adversely affected.**

## BALL JOINT END PLAY CHECK

37200140017

1. Hold the ball joint with pliers.
2. Set a caliper gage as shown in the illustration at left and measure the displacement with the ball stud compressed.

   **Limit: 1.5 mm (.059 in.)**

3. If the measured displacement is over the limit, replace the ball joint.

   NOTE
   Even if the measured displacement is within the limit, check the ball joint starting torque.

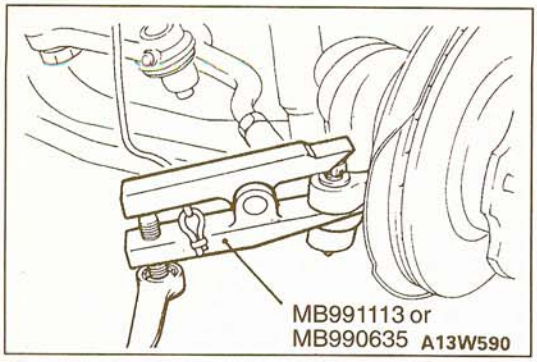


## TIE ROD END BALL JOINT STARTING TORQUE CHECK

37200150065

1. Use the special tool to disconnect the tie rod from th knuckle.

**Caution**
**1. Use cord to bind the special tool closely so it won't become separated.**
**2. The nut should only be loosened, not removed.**

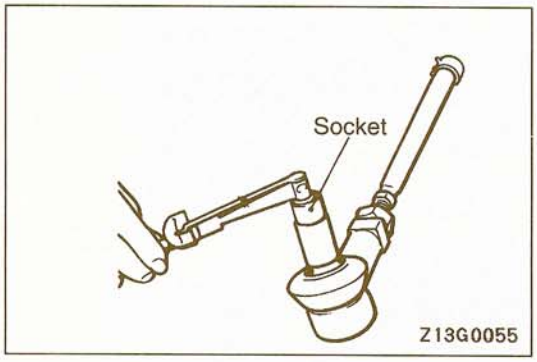


2. Move the ball joint stud several times and install the nut to the stud.
Measure the ball joint starting torque.

**Standard value: 1–3 Nm (9–26 in.lbs.)**

3. If the starting torque exceeds the standard value, replace the tie rod end.
4. If the starting torque is less than the standard value, check for play or ratcheting in the ball joint. If these are not found, the ball joint is still serviceable.

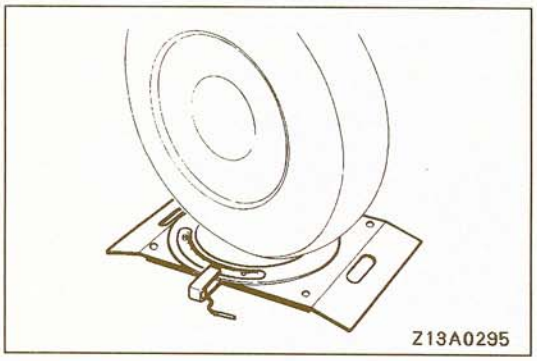


## STEERING ANGLE CHECK

37200110063

1. Place the front wheel on a turning radius gage and measure the steering angle.

**Standard value:**
**Inner wheel 29°40' – 32°40'**
**Outer wheel 29°45'**

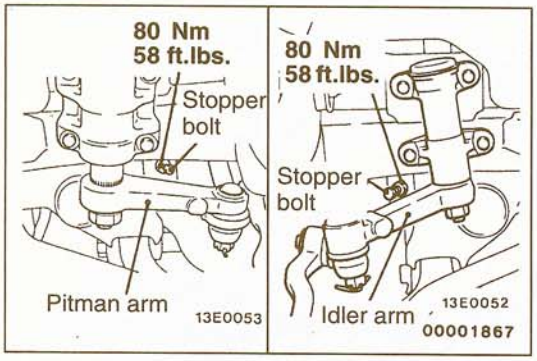


2. If the steering angle is outside the standard value, check the toe-in (refer to GROUP 33A – On-vehicle Service.), and then adjust the steering angle with the stopper bolt.

## STATIONARY STEERING EFFORT CHECK

37200170061

1. Place the vehicle on a level surface and set the steering wheel to the straight-ahead position.
2. Set the engine speed to 1,000 r/min.

**Caution**
**After checking the engine r/min, there must be a return to the standard idling r/min.**

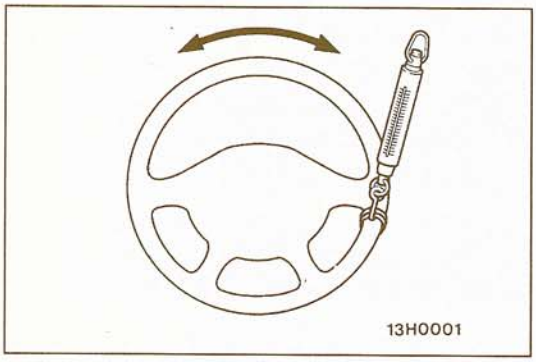


3. Measure the tangential force with a spring balance by turning the steering wheel clockwise and counter clockwise one and a half turns.

**Standard value: 37 N (8.21 lbs.) or less**

4. If the stationary steering effort exceeds the standard value, check for belt slackness, damage, insufficient oil, air mixed into oil, collapsed or twisted hoses, etc., and repair if found.

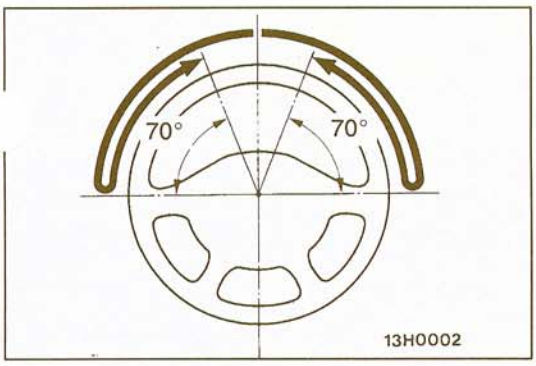


## STEERING WHEEL RETURN (TO CENTER) CHECK

37200180064

To check the return of the steering wheel to the center, carry out a road test and check the following points.

1. Make gentle and sharp turns and check that there is no appreciable difference in steering effort and return to center between right and left turns.
2. Drive at a speed of about 35 km/h (22 mph), turn the steering wheel 90° clockwise or counterclockwise, and release the wheel a second or two later. If the wheel returns more than 70°, the return may be considered good.

   NOTE
   When the steering wheel is turned abruptly, momentary hard steering might result, but this does not mean a problem. It is caused by low oil pump delivery during idling.

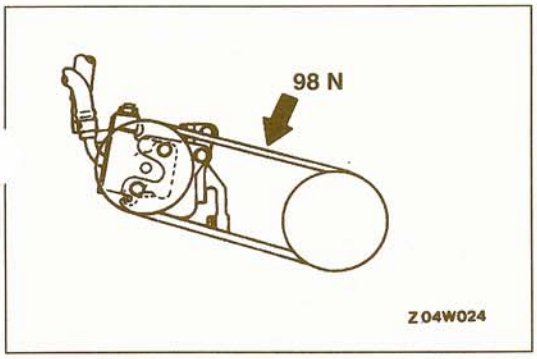


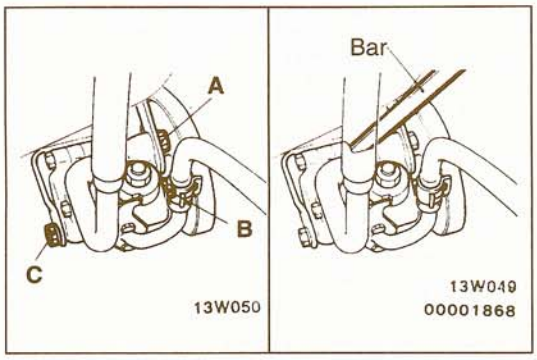


## DRIVE-BELT TENSION CHECK

37200190036

**<3.0L-12 VALVE engine>**

1. Measure the deflection of the V belt when it is subjected to a force of 98 N (22 lbs.) in the place shown in the illustration.

**Standard value:**

| | |
|---|---|
| When checked mm (in.) | 9.0–14.5 (.354–.571) |
| When an old belt is installed mm (in.) | 10.0 (.394) |
| When a new belt is installed mm (in.) | 8.0 (.315) |

2. If the belt deflection is outside the standard value, adjust by the following procedure.
   (1) Loosen oil pump fixing bolts A, B and C.
   (2) Adjust the amount of belt deflection by setting a bar against the body of the oil pump and tightening the belt by hand to the appropriate amount.
   (3) Tighten the fixing bolts A, B and C in that order.

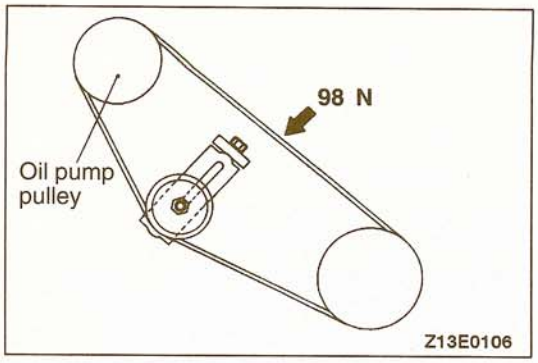


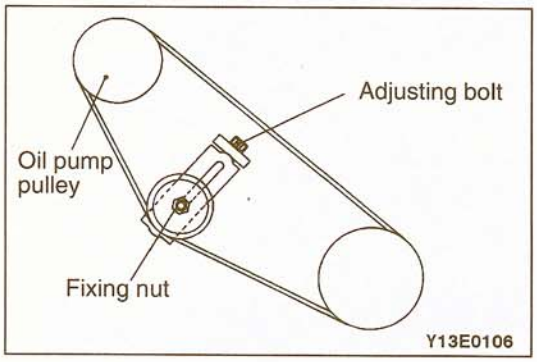


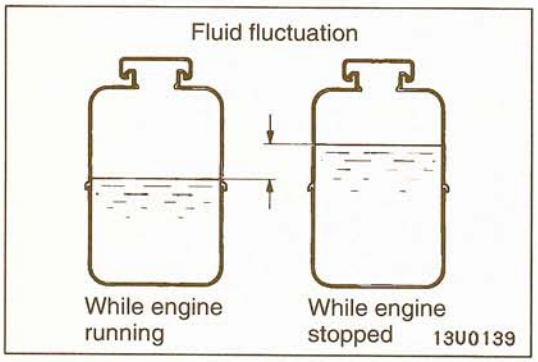


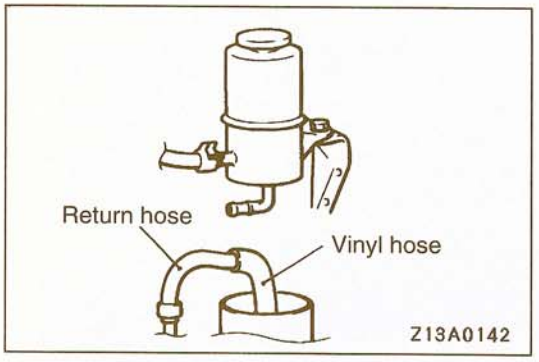


**<3.0L-24 VALVE engine, 3.5L engine>**

1. Measure the flexion of the V belt when it is subjected to a force of 98 N (22 lbs.) in the place shown.

**Standard value:**

| Item | 3.0L-24 VALVE engine | 3.5L engine |
|---|---|---|
| When checked mm (in.) | 10.5–14.5 (.413–.571) | 13.0–17.0 (.512–.669) |
| When an old belt is installed mm (in.) | 11.5–13.5 (.452–.531) | 14.0–16.0 (.551–.630) |
| When a new belt is installed mm (in.) | 9.5–11.5 (.374–.452) | 11.0–13.0 (.433–.512) |

2. If the flexion value is outside the standard value, adjust by the following procedure.
   (1) Loosen tension pulley fixing nut.
   (2) Adjusting belt tension with adjusting bolt.
   (3) Tighten the fixing bolt.

## FLUID LEVEL CHECK

37200200050

1. Park the vehicle on a flat, level surface, start the engine, and then turn the steering wheel several times to raise the temperature of the fluid to approximately 50–60 °C (122–140 °F).
2. With the engine running, turn the wheel all the way to the left and right several times.
3. Check the fluid in the oil reservoir for foaming or milkiness.
4. Check the difference of the fluid level when the engine is stopped and while it is running. If the fluid level changes considerably, air bleeding should be carried out.

## FLUID REPLACEMENT

37200210053

Check for contamination in the fluid reservoir. Foamy or cloudy fluid should be replaced.

1. Remove the reservoir cap.
2. Disconnect the return hose from the reservoir tank and remove the fluid.
3. Disconnect the high tension cable.
4. Run the engine intermittently several times with the starting motor to remove the fluid from the gear box.
5. Attach the return hose and fill with the specified automatic transmission fluid.

   **Specified fluid:**
   **MITSUBISHI PLUS ATF/"DEXRON" or "DEXRON II" Automatic transmission fluid**

6. Bleed the system and check the fluid pressure.

## AIR BLEEDING

37200220056

Check the stationary steering effort. If it is different from the standard value, there is probably air in the system, so bleed the system.

1. Jack up the front wheels and support them by using a rigid rack.
2. Manually turn the oil pump pulley a few times.
3. Turn the steering wheel all the way to the left and to the right five or six times.
4. Disconnect the high tension cable <3.0L-12 VALVE engine> or spark plug cables <3.0L-24 VALVE engine, 3.5L engine>. While operating the starting motor intermittently, turn the steering wheel all the way to the left and right five or six times (for 15 to 20 seconds).

**Caution**

1. **During air bleeding, refill the fluid supply so that the level never falls below the lower position of the filter.**
2. **If air bleeding is done while engine running, the air will be broken up and absorbed into the fluid; be sure to do the bleeding only while cranking.**

5. Connect the high tension cable <3.0L-12 VALVE engine> or spark plug cables <3.0-24 VALVE engine, 3.5L engine>. Start the engine (idling).
6. Turn the steering wheel to the left and right until there are no air bubbles in the oil reservoir.
7. Confirm that the fluid is not milky, and that the level is up to the specified position on the level gage.
8. Confirm that there is very little change in the fluid level when the steering wheel is turned left and right.
9. Check whether or not the change in the fluid level is within 5 mm (.20 in.) when the engine is stopped and when it is running.

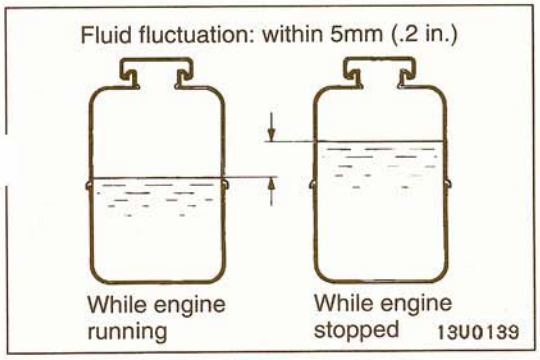


**Caution**

1. **If the change of the fluid level is 5 mm (.20 in.) or more, the air has not been completely bled from the system, and thus must be bled completely.**
2. **If the fluid level rises suddenly after the engine is stopped, the air has not been completely bled.**
3. **If air bleeding is not complete, there will be abnormal noises from the pump and the flow-control valve, and this condition could cause a lessening of the life of the pump, etc.**

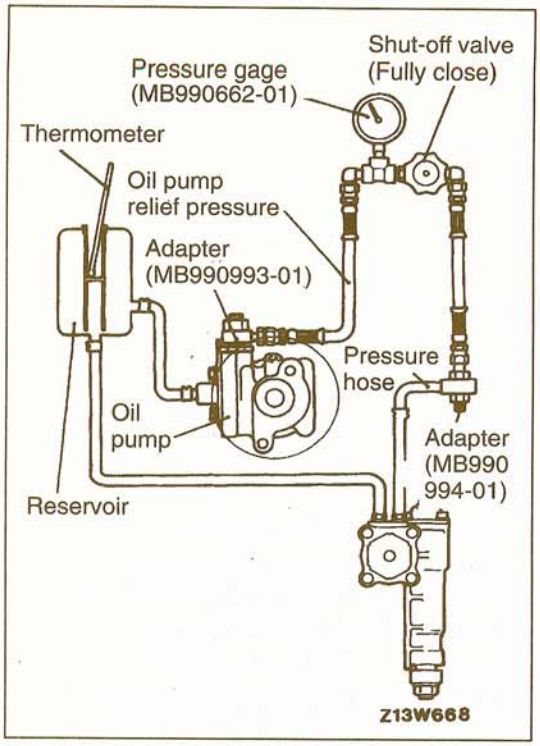


## OIL PUMP PRESSURE TEST

37200230066

### OIL PUMP RELIEF PRESSURE CHECK

1. Disconnect the pressure hose from the oil pump, ar then connect the special tools.
2. Bleed the air, and then turn the steering wheel several times while the vehicle is not moving so that the temperature of the fluid rises to approximately 50–60 °C (122–140 °F).
3. Start the engine and idle it at 1,000±100 r/min.
4. Fully close the shut-off valve of the pressure gage and measure the oil pump relief pressure to confirm that it is within the standard value range.

   **Standard value:**
   **<3.0L-12 VALVE engine>**
   **7.35–8.04 MPa (1,067–1,166 psi.)**
   **<3.0L-24 VALVE engine, 3.5L-engine>**
   **8.31–9.00 MPa (1,205–1,305 psi.)**

   **Caution**
   **Pressure gage shut off valve must not remain closed for more than 10 seconds.**

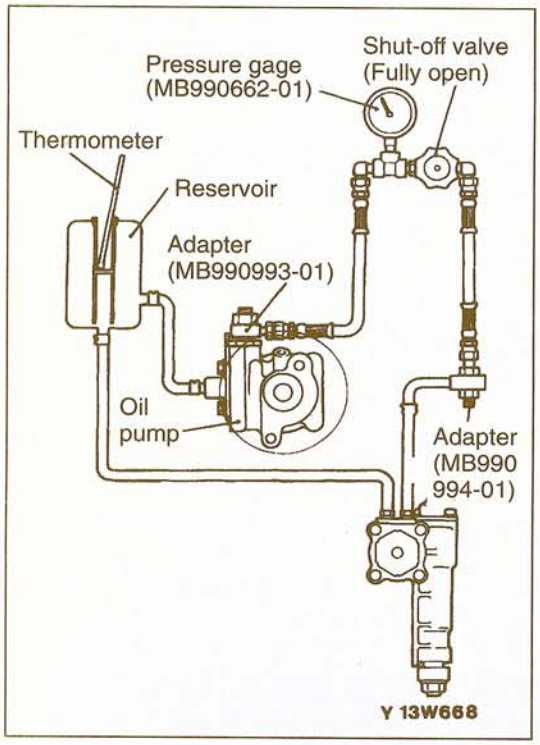


5. If it is not within the standard value, overhaul the oil pump.
6. Remove the special tools, and then tighten the pressure hose to the specified torque.
7. Bleed the system.

### PRESSURE CHECK UNDER NO-LOAD CONDITIONS

1. Disconnect the pressure hose from the oil pump, and then connect the special tools.
2. Bleed the air, and then turn the steering wheel several times while the vehicle is not moving so that the temperature of the fluid raises to approximately 50–60 °C (122–140 °F).
3. Start the engine and idle it at 1,000±100 r/min.
4. Check that the hydraulic pressure is at the standard value when no-load conditions are created by fully opening the shut-off valve of the pressure gage.

   **Standard value: 0.78–0.98 MPa (114–142 psi.)**

5. If it is not within the standard value, the probable cause is a malfunction of the oil line or steering gear box, so check these parts and repair as necessary.
6. Remove the special tools, and then tighten the pressure hose to the specified torque.
7. Bleed the system.

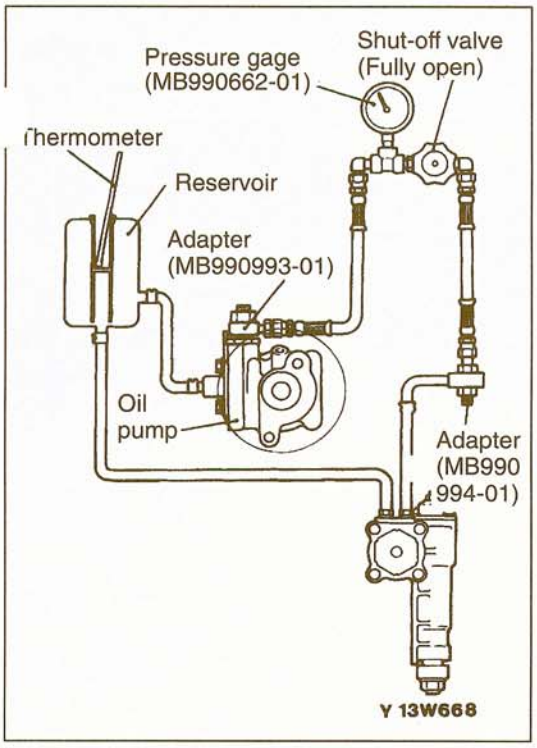


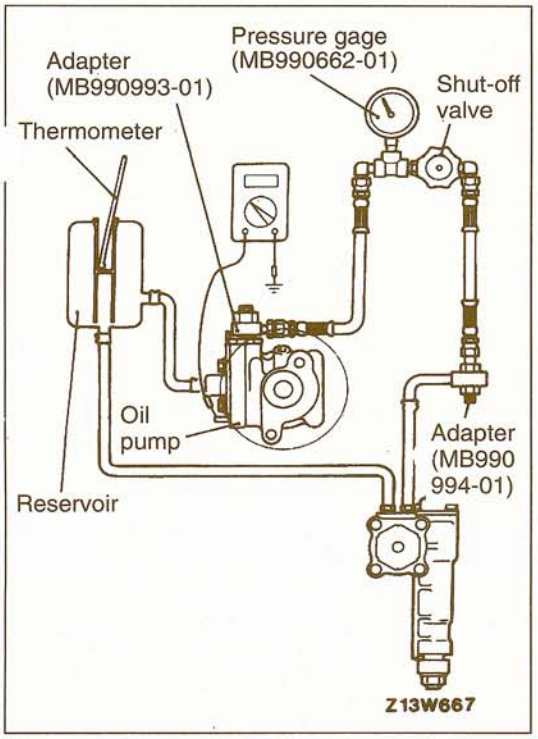


## STEERING GEAR RETENTION HYDRAULIC PRESSURE CHECK

1. Disconnect the pressure hose from the oil pump, and then connect the special tools.
2. Bleed the air, and then turn the steering wheel several times while the vehicle is not moving so that the temperature of the fluid rises to approximately 50–60 °C (122–140 °F).
3. Start the engine and idle it at 1,000±100 r/min.
4. Fully open the shut-off valve of the pressure gage.
5. Turn the steering wheel all the way to the left or right, and then check that the retention hydraulic pressure is at the standard value.

   **Standard value:**

   **<3.0L-12 VALVE engine>**
   **7.35–8.04 MPa (1,067–1,166 psi.)**

   **<3.0L-24 VALVE engine, 3.5L-engine>**
   **8.31–9.00 MPa (1,205–1,305 psi.)**
6. If the pressure is not within the standard value, overhaul the steering gear box, and then re-measure the fluid pressure.
7. Remove the special tools, and then tighten the pressure hose to the specified torque.
8. Bleed the system.

## POWER STEERING PRESSURE SWITCH CHECK

37200720044

1. Disconnect the pressure hose from the oil pump, and then connect the special tools.
2. Bleed the air, and then turn the steering wheel several times while the vehicle is not moving so that the temperature of the fluid rises to approximately 50–60 °C (122–140 °F).
3. The engine should be idling.
4. Disconnect the connector for the oil-pressure switch, and connect an ohmmeter.
5. Gradually close the shut-off valve of the pressure gage and increase the hydraulic pressure, and then check that the hydraulic pressure that activates the switch is at the standard value.

   **Standard value: 1.47–1.96 MPa (213–284 psi.)**
6. Gradually open the shut-off valve and reduce the hydraulic pressure, and then check that the hydraulic pressure that deactivates the switch is at the standard value.

   **Standard value: 0.69–1.18 MPa (100–171 psi.)**
7. Remove the special tools, and then tighten the pressure hose to the specified torque.
8. Bleed the system.

# STEERING COLUMN AND SHAFT

37200260065

## REMOVAL AND INSTALLATION

**CAUTION: SRS**
**Before removal of air bag module, refer to GROUP 52B – SRS Service Precautions and Air Bag Module and Clock spring.**

**Post-installation Operation**
- Steering Wheel Position with Wheels Straight Ahead Checking

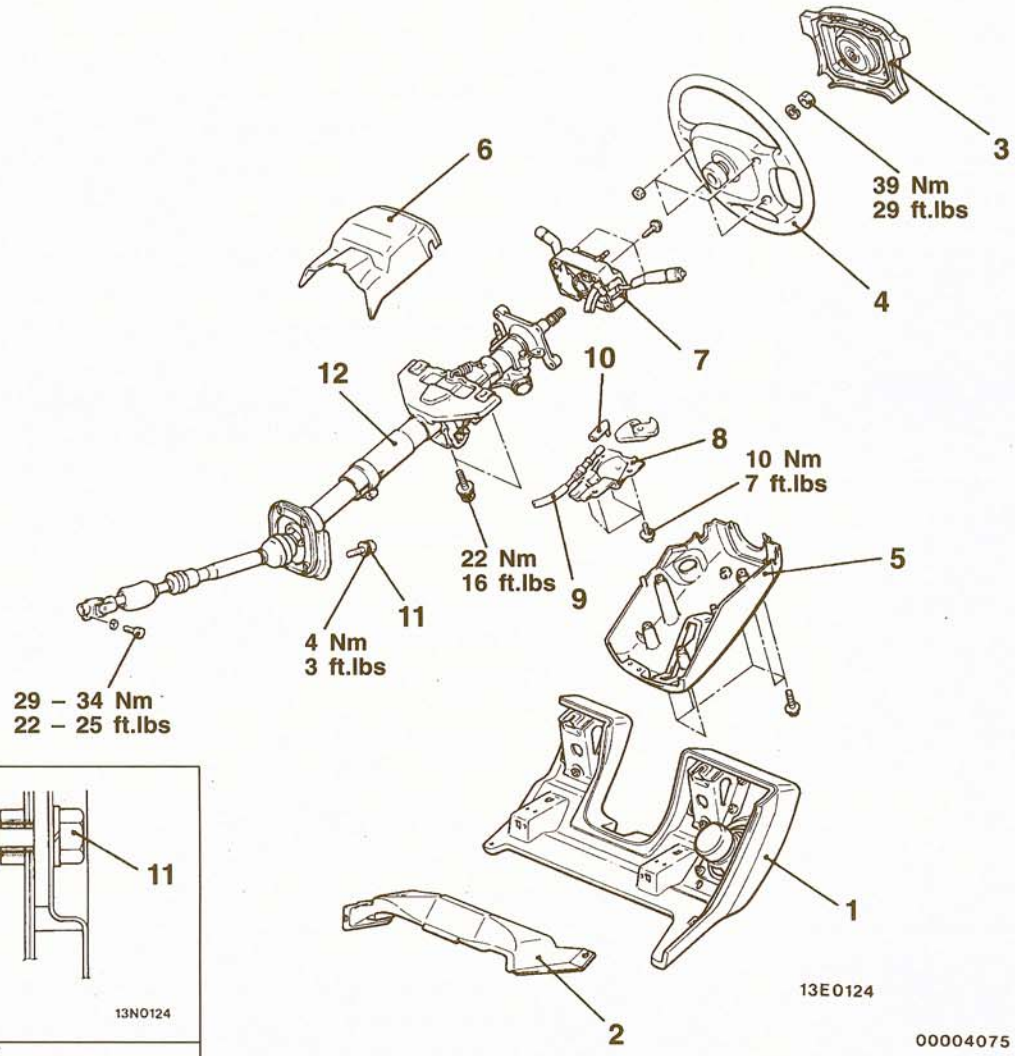





**Sealant:**
**3M ATD Part No. 8663 or equivalent**

**Removal steps**

1. Knee protector (Refer to GROUP 52A – Instrument Panel.)
2. Foot shower duct (Refer to GROUP 55 – Ventilators.)
3. Air bag module (Refer to GROUP 52B – Air Bag Module and Clock Spring.)
◀A▶ 4. Steering wheel
5. Lower column cover
6. Upper column cover
7. Column switch
8. Cover <A/T> (Refer to GROUP 23A – Transmission Control.)
9. Key interlock cable <A/T> (Refer to GROUP 23A – Transmission Control.)
10. Slide lever <A/T> (Refer to GROUP 23A – Transmission Control.)
▶B◀ 11. Cover attaching bolt
▶A◀ 12. Steering column and shaft assembly

**TSB Revision**

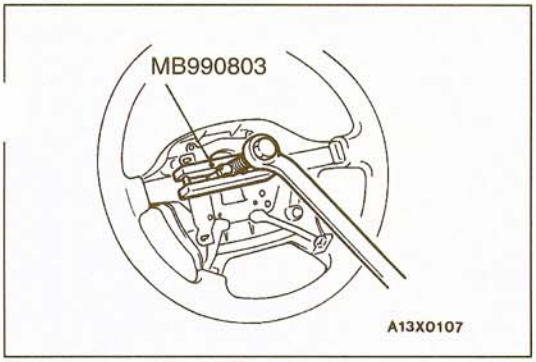


## REMOVAL SERVICE POINT

### ◀A▶ STEERING WHEEL REMOVAL

Use a steering wheel puller to remove the steering wheel.

**Caution**
**Do not hammer on the steering wheel to remove it; doing so may damage the collapsible mechanism.**

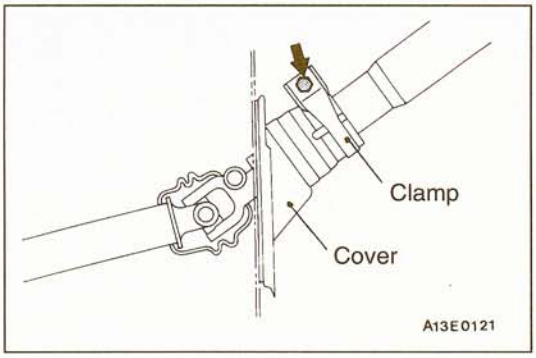


## INSTALLATION SERVICE POINTS

### ▶A◀ STEERING COLUMN AND SHAFT ASSEMBLY INSTALLATION

When installing the steering column and shaft assembly to the vehicle body, the bolt indicated by the arrow should never be loosened.

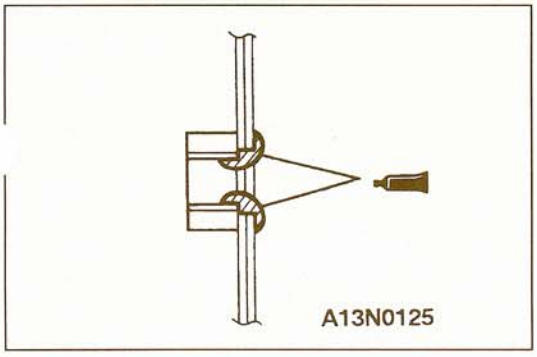


### ▶B◀ COVER ATTACHING BOLT INSTALLATION

Before installing the bolt, apply specified sealant to the toeboard mounting hole.

## DISASSEMBLY AND REASSEMBLY

37200280061

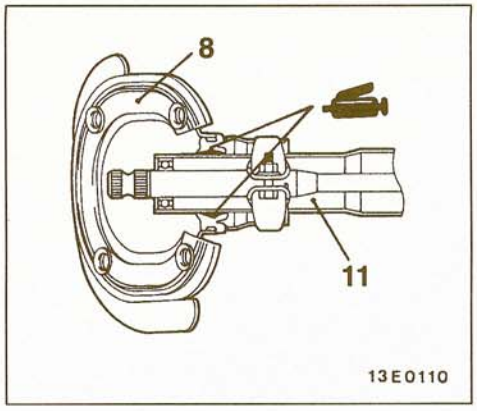


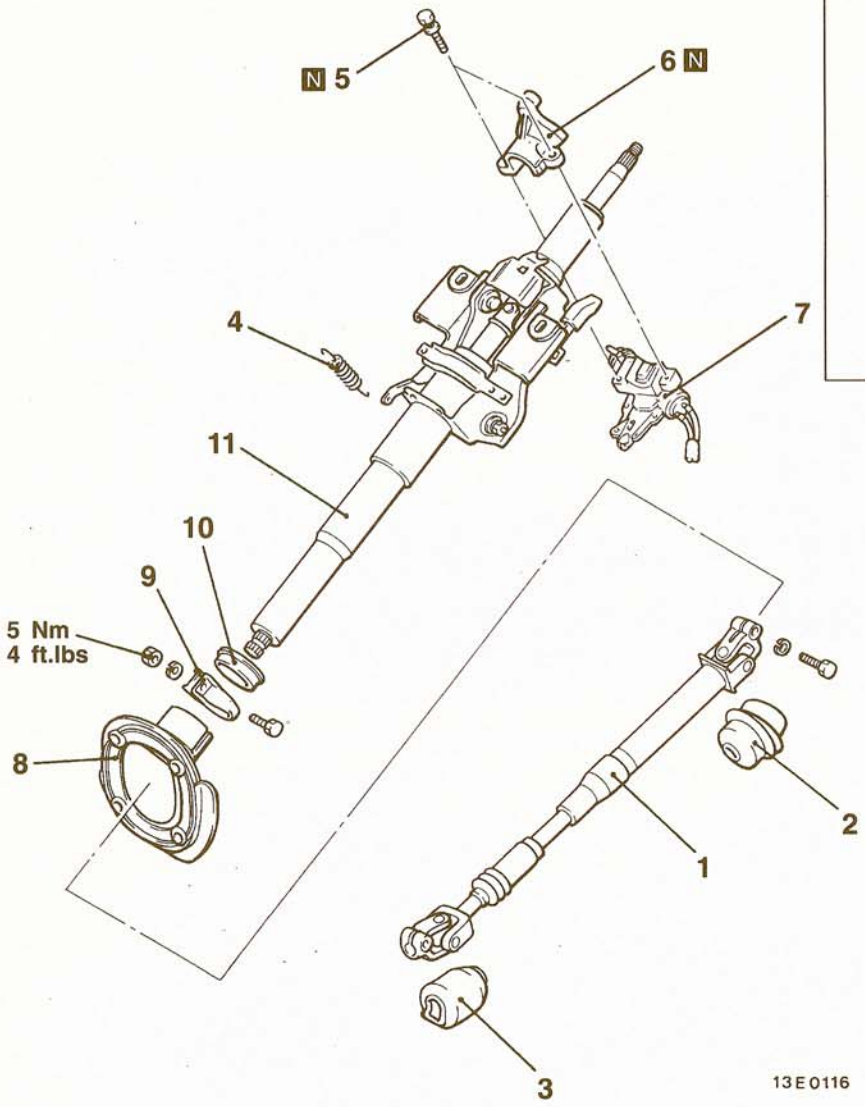


**Disassembly steps**

1. Joint assembly
2. Upper boot
3. Lower boot
4. Return spring
▶B◀ 5. Special bolt
◀A▶ ▶B◀ 6. Steering lock bracket
◀A▶ ▶B◀ 7. Steering lock cylinder
▶A◀ 8. Cover assembly
▶A◀ 9. Clamp
10. Bush
11. Steering column assembly

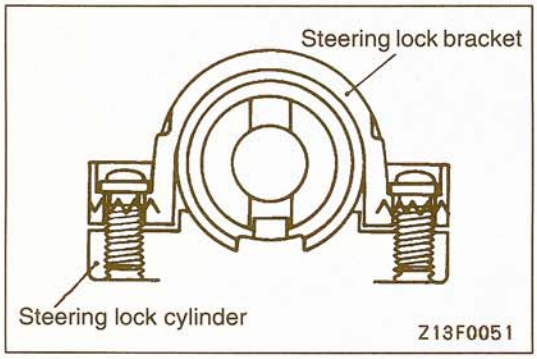


## DISASSEMBLY SERVICE POINT

### ◀A▶ STEERING LOCK BRACKET/STEERING LOCK CYLINDER REMOVAL

If it is necessary to remove the steering lock cylinder, use a hacksaw to cut the special bolts at the steering lock bracket side.

TSB Revision

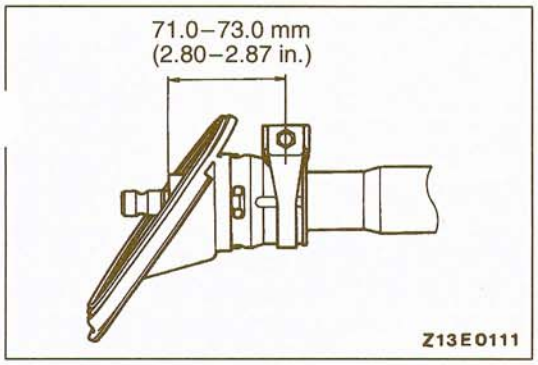


## REASSEMBLY SERVICE POINTS

### ▶A◀ CLAMP/COVER ASSEMBLY INSTALLATION

Install the clamp to the steering column assembly as shown in the illustration.

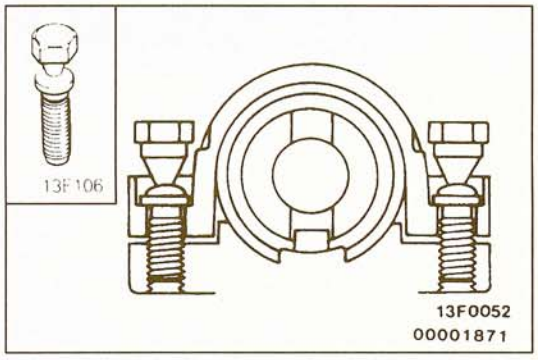


### ▶B◀ STEERING LOCK CYLINDER/STEERING LOCK BRACKET/SPECIAL BOLT INSTALLATION

(1) When installing the steering lock and steering lock bracket to the column tube, temporarily install the steering lock so that it is aligned with the column boss.
(2) After checking that the lock works properly, tighten the special bolts until the heads twist off.

**Caution**
**The steering lock bracket and bolts must be replaced with new ones when the steering lock is installed.**

## INSPECTION

37200290033

- Check the steering shaft for play and round movement.
- Check the joints for play, damage, or rough movement.
- Check the boots and cover assembly for damage.

# POWER STEERING GEAR BOX

37200390061

## REMOVAL AND INSTALLATION

**CAUTION: SRS**
**For vehicles with SRS, before removal of steering gear box, refer to GROUP 52B – SRS, center front wheels and remove ignition key.**
**Failure to do so may damage SRS clock spring and render SRS system inoperative, risking serious driver in jury.**

**Pre-removal Operation**
- Power Steering Fluid Draining (Refer to P.37A-10.)

**Post-installation Operation**
- Power Steering Fluid Supplying (Refer to P.37A-10.)
- Power Steering Fluid Line Bleeding (Refer to P.37A-11.)

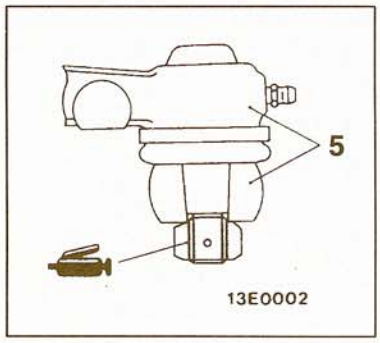


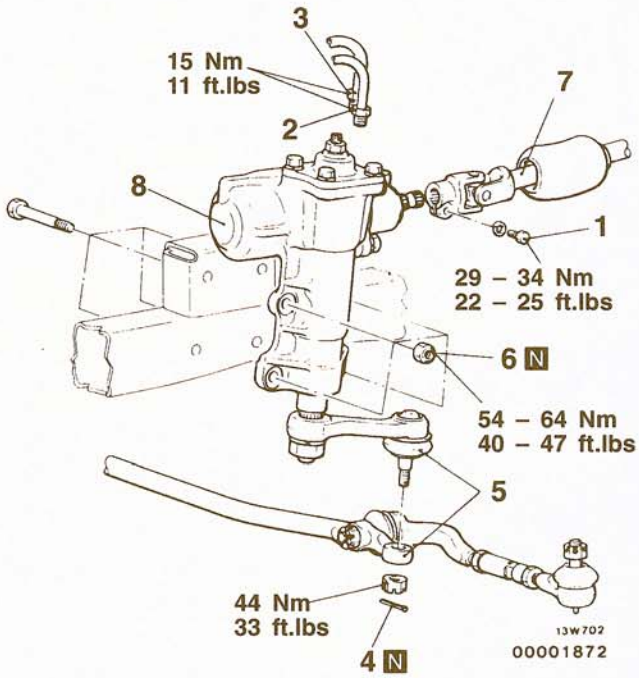


**Removal steps**

1. Bolt
2. Pressure hose connection
3. Return hose connection
4. Split pin

◀A▶ 5. Relay rod and pitman arm connection
6. Self-locking nuts
7. Joint assembly connection
▶A◀ 8. Power steering gear box

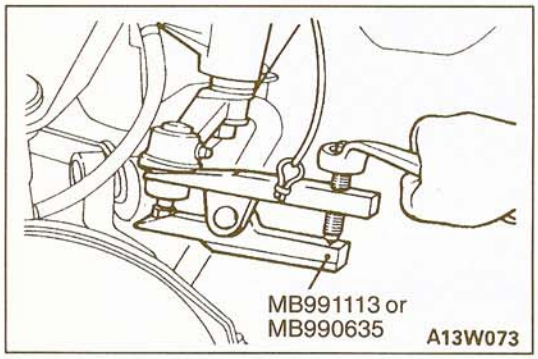


## REMOVAL SERVICE POINT

### ◀A▶ RELAY ROD AND PITMAN ARM DISCONNECTION

Use the special tool to disconnect the pitman arm from the relay tod.

**Caution**
1. **Use cord to bind the special tool closely so it won't become separated.**
2. **The nut should only be loosened, not removed.**

**TSB Revision**

## INSTALLATION SERVICE POINT

### ▶A◀ POWER STEERING GEAR BOX INSTALLATION

Install the power steering gear box to the frame after inserting the power steering gear box mainshaft into the joint assembly.

## DISASSEMBLY

37200420012

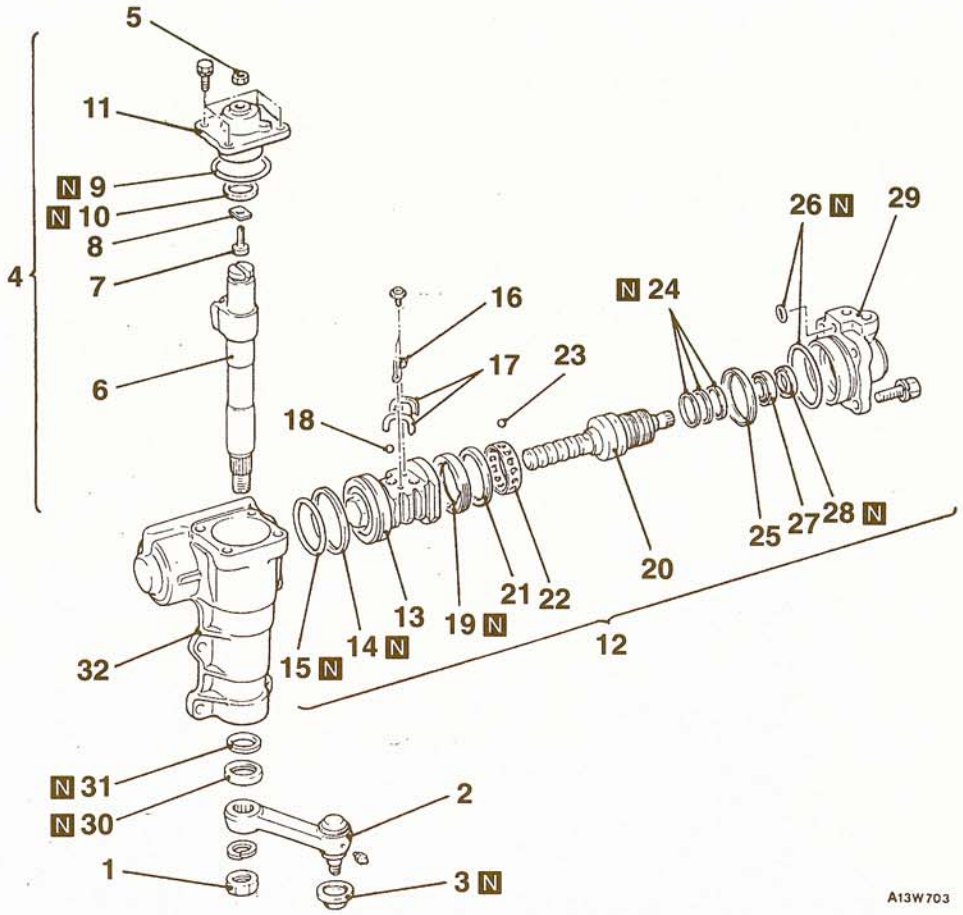


**Disassembly steps**

1. Jam nut
◀A▶ 2. Pitman arm
3. Dust cover
◀B▶ 4. Side cover and cross-shaft assembly
5. Adjusting bolt lock nut
6. Cross-shaft
7. Adjusting bolt
8. Adjusting plate
9. O-ring
◀C▶ 10. Y-packing
11. Side cover
12. Main shaft and valve assembly
◀D▶ 13. Rack piston
14. Seal ring
15. O-ring
16. Circulator holder
17. Circulator
18. Ball
◀E▶ 19. Lock nut
◀F▶ 20. Main shaft
◀F▶ 21. Bearing race
◀F▶ 22. Cage
◀F▶ 23. Ball
24. Seal ring
25. Bearing race
26. O-ring
◀G▶ 27. Bearing
◀G▶ 28. Oil seal
29. Valve housing
30. Oil seal
31. Y-packing
32. Gear box housing

**TSB Revision**

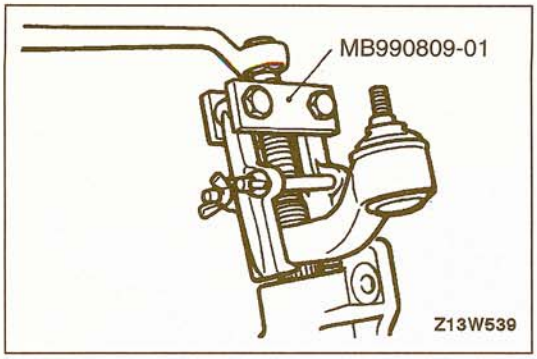


## DISASSEMBLY SERVICE POINTS

### ◀A▶ PITMAN ARM REMOVAL

Use the special tool to remove the pitman arm from the gear box assembly.

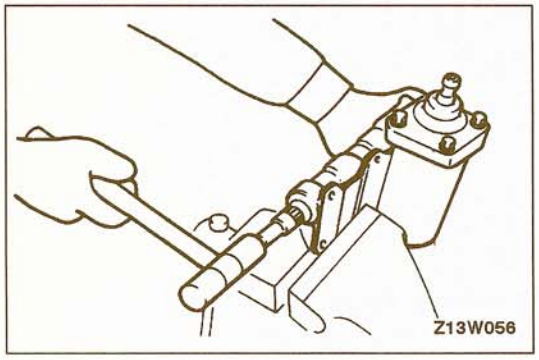


### ◀B▶ SIDE COVER AND CROSS-SHAFT ASSEMBLY REMOVAL

With the mainshaft and cross-shaft placed in the straight-ahead position, tap the bottom of the cross-shaft with a plastic hammer to take out the cross-shaft together with the side cover.

### ◀C▶ Y-PACKING REMOVAL

Do not remove the Y-packing at the rear of the needle bearing unless there is fluid leakage from the threads of the adjusting bolt. If there is leakage, replace the Y-packing with a new one.

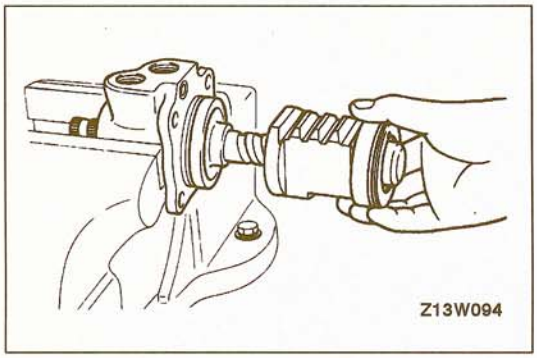


### ◀D▶ RACK PISTON REMOVAL

Remove the rack piston from the mainshaft by turning it counterclockwise.

**Caution**
**Be careful not to lose the 26 balls inside the rack piston.**

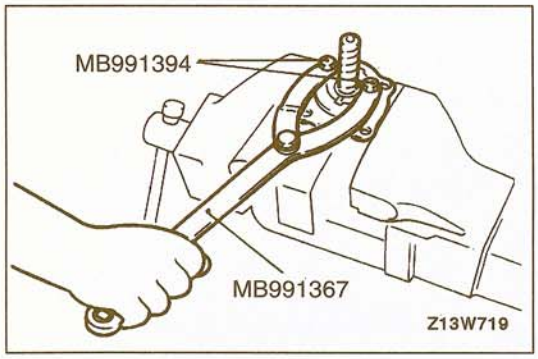


### ◀E▶ LOCK NUT REMOVAL

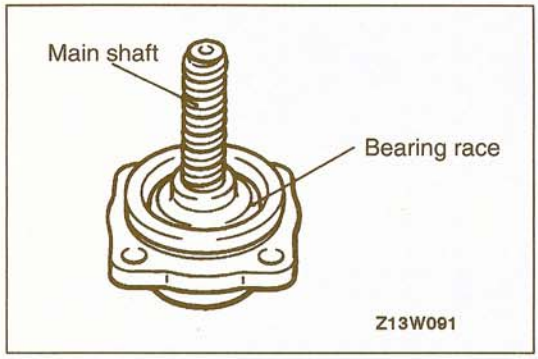


### ◀F▶ MAIN SHAFT/BEARING RACE/CAGE/BALL REMOVAL

When removing the main shaft, remove it while pressing the bearing race so that the balls do not come out.

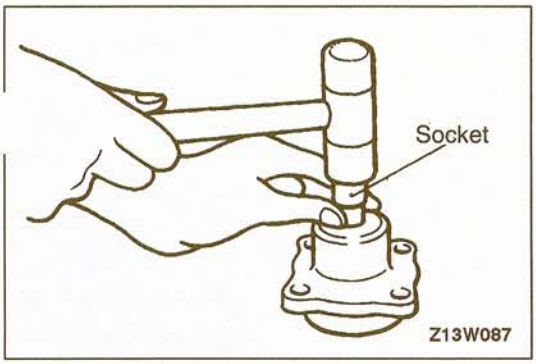


### ◀G▶ BEARING/OIL SEAL REMOVAL

Use a socket remove the oil seal and the bearing from the valve housing simultaneously.

## INSPECTION

37200440049

- Check the mainshaft for wear and damage.
- Check the tooth surfaces of the cross shaft and the rack piston for wear and damage.
- Check the contact part of adjusting bolt for uneven wear.
- Check the dust cover and the oil seal for wear and damage.
- Check the O-rings for damage.

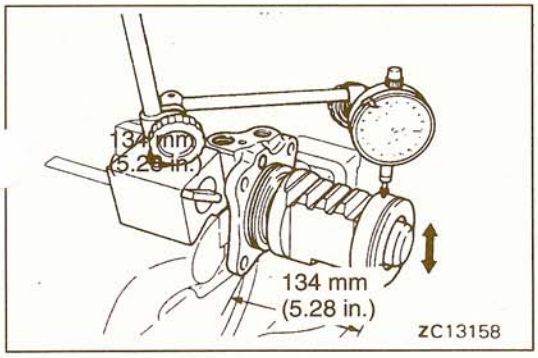


### 1. BACKLASH BETWEEN BALL GROOVE OF RACK PISTON AND BALLS

Set the rack piston to the position shown in the illustration, and then use a dial gage to measure the backlash.

**Limit: 0.05 mm (.0020 in.)**

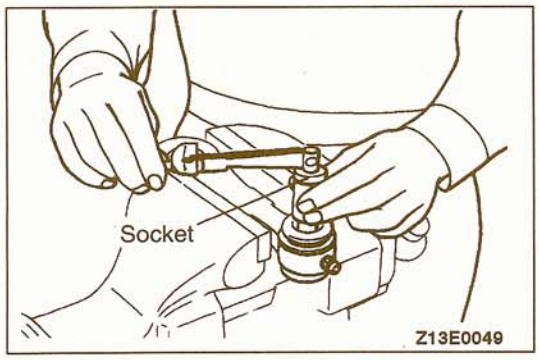


### 2. PITMAN ARM BALL JOINT STARTING TORQUE

**Standard value: 1–3 Nm (9–26 in.lbs.)**

## REASSEMBLY

37200430015

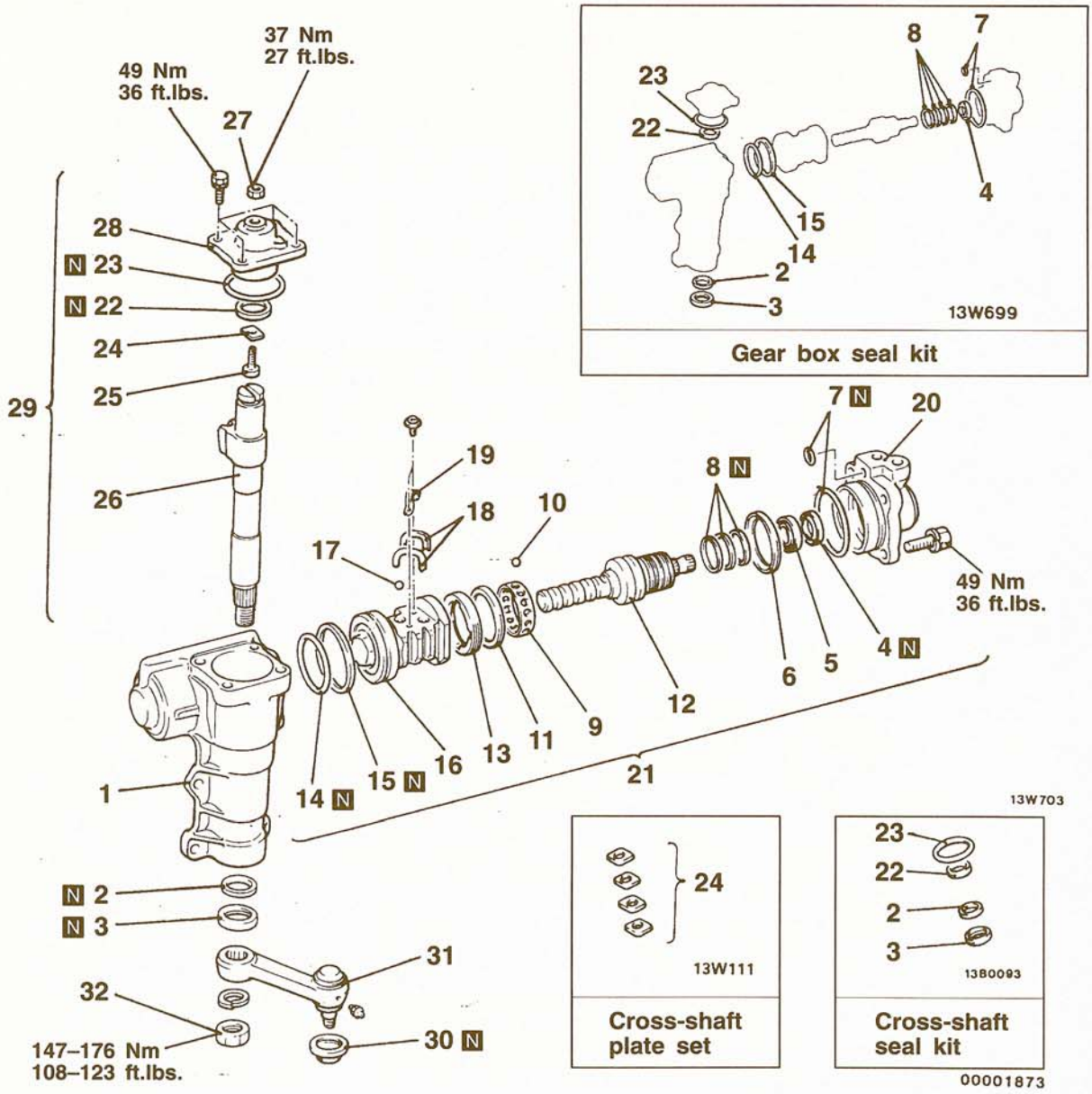


### Reassembly steps

1. Gear box housing
▶A◀ 2. Y-packing
▶A◀ 3. Oil seal
▶B◀ 4. Oil seal
▶C◀ 5. Bearing
6. Bearing race
7. O-ring
▶D◀ 8. Seal ring
▶E◀ 9. Cage
▶E◀ 10. Ball
▶E◀ 11. Bearing race
▶E◀ 12. Main shaft
▶F◀ 13. Lock nut
▶G◀ • Main shaft end play adjustment
14. O-ring
15. Seal ring
▶H◀ 16. Rack piston
17. Ball
18. Circulator
19. Circulator holder
▶I◀ 20. Valve housing
21. Main shaft and valve assembly
22. Y-packing
23. O-ring
▶J◀ 24. Adjusting plate
▶J◀ 25. Adjusting bolt
▶K◀ 26. Cross-shaft
▶K◀ 27. Adjusting bolt lock nut
28. Side cover
▶L◀ 29. Side cover and cross-shaft assembly
▶M◀ • Main shaft total starting torque adjustment
30. Dust cover
▶N◀ 31. Pitman arm
32. Jam nut

TSB Revision

## LUBRICATION AND SEALING POINTS

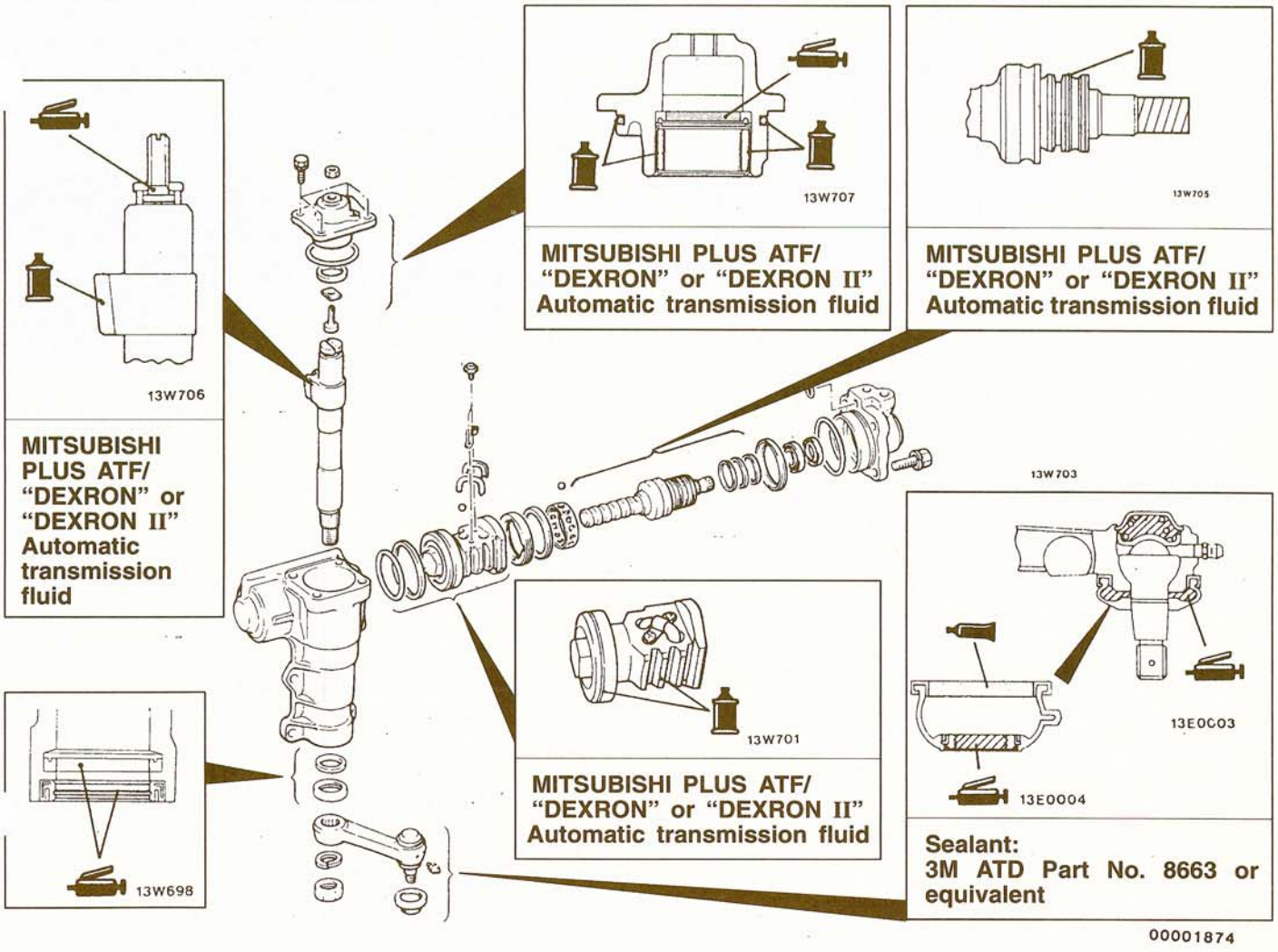


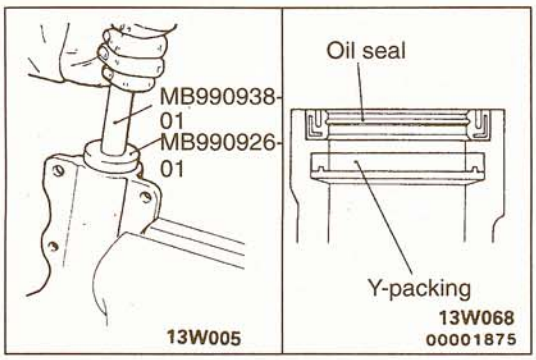


## REASSEMBLY SERVICE POINTS

### ▶A◀ Y-PACKING/OIL SEAL INSTALLATION

(1) Install the Y-packing facing the direction shown in the illustration.
(2) Use the special tool to press-fit the oil seal to the gearbox housing so that it faces in the direction shown in the illustration.

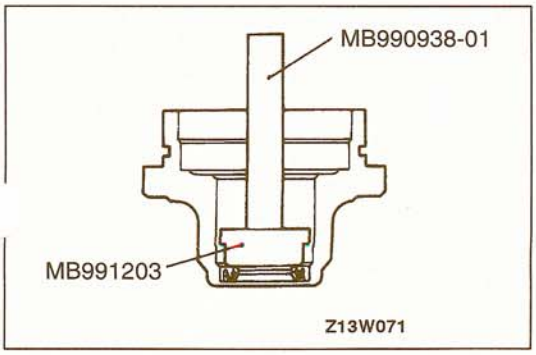


### ▶B◀ OIL SEAL INSTALLATION

Apply specified automatic transmission fluid to the outside of the oil seal, and then use the special tools to press the oil seal into the valve housing.

**Specified fluid:**
**MITSUBISHI PLUS ATF/"DEXRON" or "DEXRON II" Automatic transmission fluid**

TSB Revision

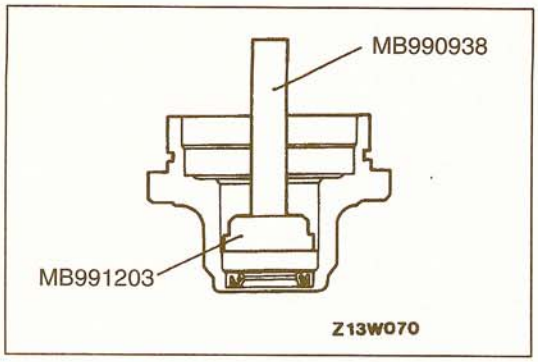


### ▶C◀ BEARING INSTALLATION

Apply specified automatic transmission fluid to the outside of the bearing, and then use the special tools to press the bearing into the valve housing.

**Specified fluid:**
**MITSUBISHI PLUS ATF/"DEXRON" or "DEXRON II" Automatic transmission fluid**

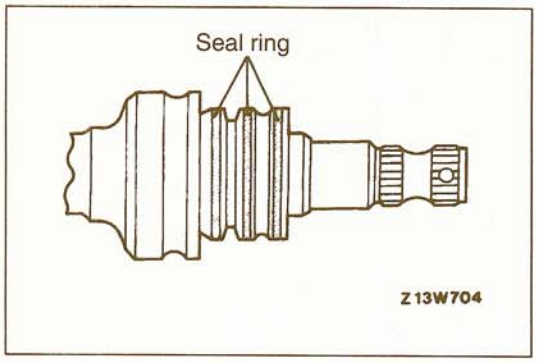


### ▶D◀ SEAL RING INSTALLATION

When installing the seal ring, press it firmly into the valve groove.

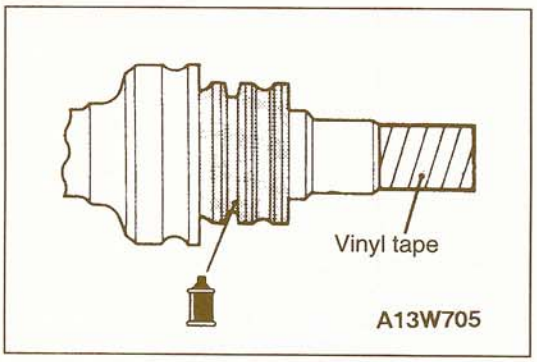


### ▶E◀ CAGE/BALL/BEARING RACE/MAIN SHAFT INSTALLATION

(1) Apply specified automatic transmission fluid to the valve body.

**Specified fluid:**
**MITSUBISHI PLUS ATF/"DEXRON" or "DEXRON II" Automatic transmission fluid**

(2) Wrap vinyl tape around the serrated part so that the oil seal won't be damaged when the valve body is installed to the valve housing.
(3) Install the valve body to the valve housing.
(4) Align the cage's hole and the channel in the main shaft, and insert two or three balls.
(5) Insert the remainder of the balls into the cage's hole while pressing the ball with the bearing race.

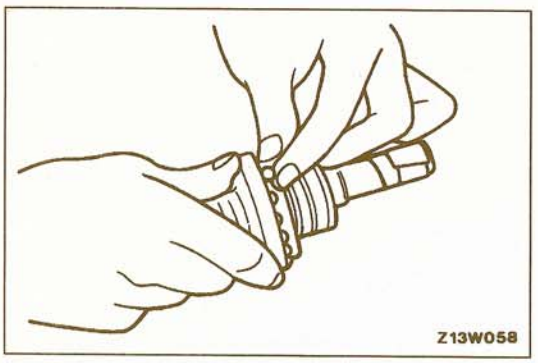


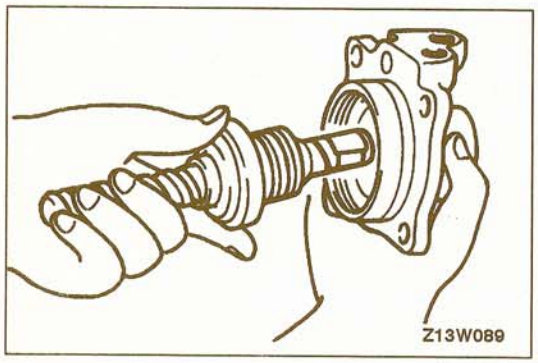


(6) When installing the main shaft, connect it to the valve housing while pressing the bearing race so that the balls do not come out.

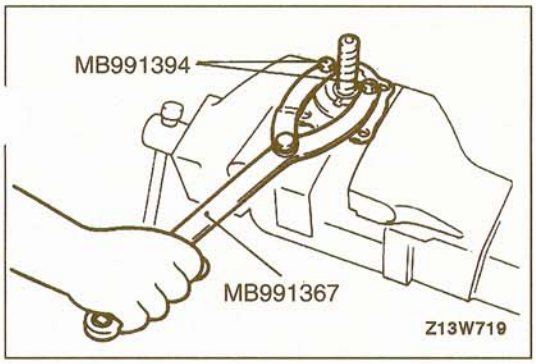


### ▶F◀ LOCK NUT INSTALLATION

Use the special tool to tighten carefully until the lock nut contacts the bearing race.

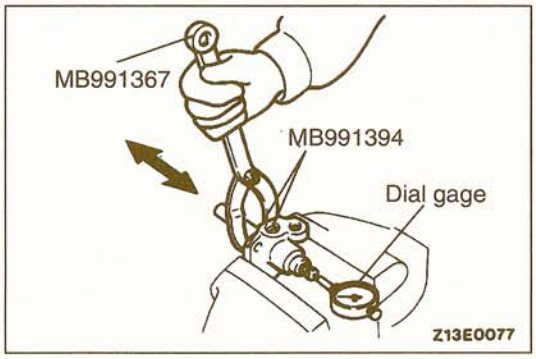


### ▶G◀ MAIN SHAFT END PLAY ADJUSTMENT

(1) Adjust the play by tightening the lock nut gradually so that the mainshaft end play will meet the range of standard value.

**Standard value: 0.03 mm (.0012 in.) or less**

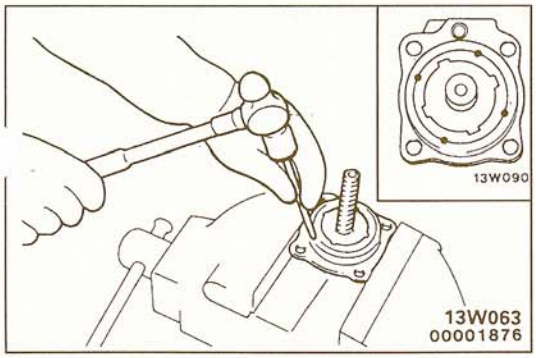


(2) Use a punch to crimp the circumference of the lock nut in order to secure the lock nut.
(3) Check that the mainshaft rotates smoothly.

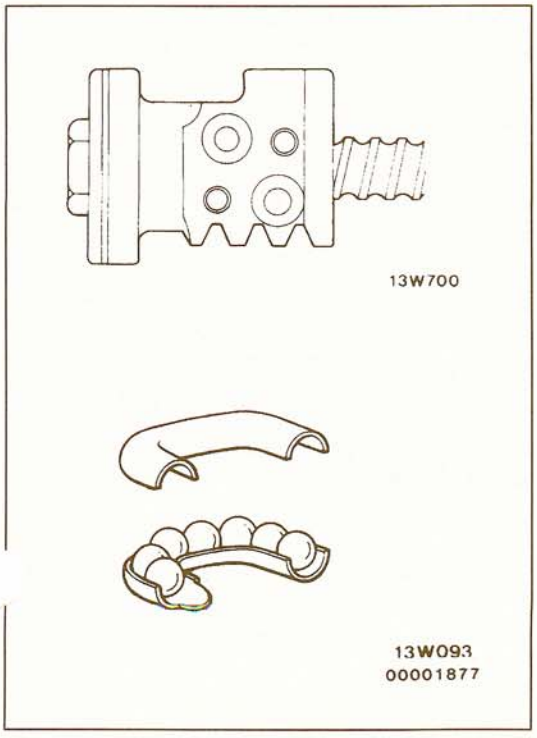


### ▶H◀ RACK PISTON INSTALLATION

(1) Install the rack piston until it comes in contact with the edge of the main shaft.
(2) Rotate the main shaft to align the ball raceway with the 19-ball insertion hole.

NOTE
The balls must be inserted so that there is no clearance between them.

(3) Set the remaining seven balls in the circulator, and install the circulator to the rack piston.

### ▶I◀ VALVE HOUSING INSTALLATION

(1) Apply specified automatic transmission fluid to the seal ring of the rack piston.

**Specified fluid:**
**MITSUBISHI PLUS ATF/Automatic transmission fluid "DEXRON" or "DEXRON II"**

(2) Insert the valve housing.
(3) Rotate the main shaft until the rack piston moves to the neutral position (center).

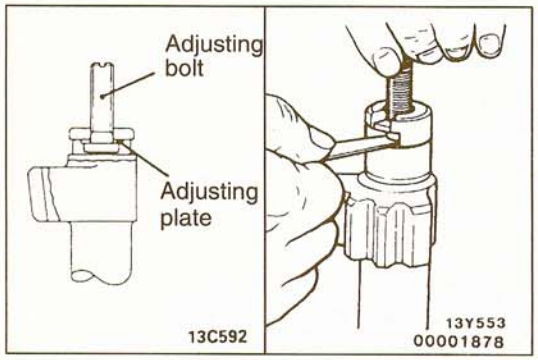


### ▶J◀ ADJUSTING PLATE/ADJUSTING BOLT INSTALLATION

(1) Install the adjusting plate so that the beveled part is facing downward.
(2) Use a feeler gage to measure the clearance between the adjusting bolt and the cross-shaft.

**Standard value: 0–0.05 mm (0–.002 in.)**

(3) If the clearance is exceeded the standard value, replace with a suitable adjusting plate.

### ▶K◀ CROSS-SHAFT/ADJUSTING BOLT LOCK NUT INSTALLATION

Install the cross-shaft to the side cover, and then temporarily tighten the adjusting bolt lock nut.

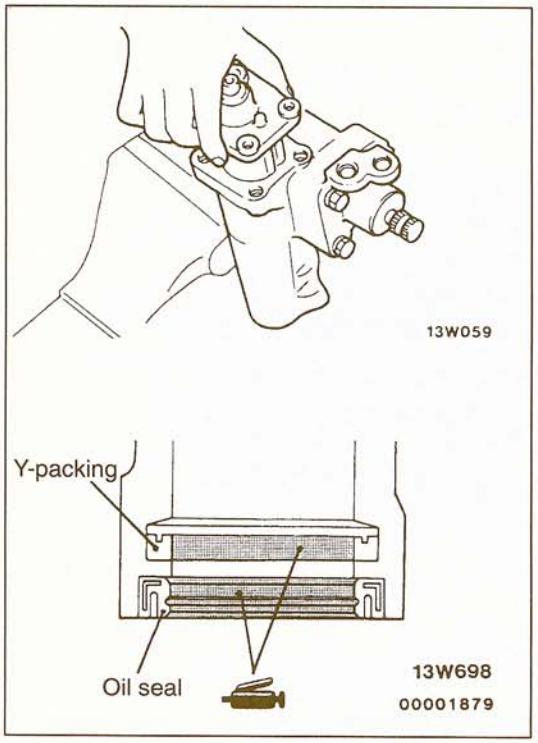


### ▶L◀ SIDE COVER AND CROSS-SHAFT ASSEMBLY INSTALLATION

Install the side cover assembly (with the cross-shaft) to the gear box.

NOTE
Apply specified automatic transmission fluid to the teeth and shaft areas of the rack piston, and apply multipurpose grease to the oil seal lip.

**Specified fluid:**
**MITSUBISHI PLUS ATF/Automatic transmission fluid "DEXRON" or "DEXRON II"**

**Caution**
**Do not rotate the side cover during installation. Take care not to damage the cross-shaft oil seal.**

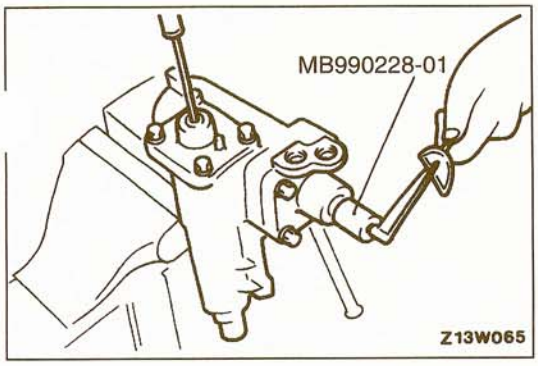


### ▶M◀MAIN SHAFT TOTAL STARTING TORQUE ADJUSTMENT

(1) Use the special tool to measure the main shaft total starting torque while turning the adjusting bolt.

**Standard value: 0.45–1.25 Nm (4–11 in.lbs.)**

**Caution**
**Adjust by turning the adjusting bolt so that the starting torque at the center position of the rack piston is approximately 0.2 Nm (2 in.lbs.) higher than the values at the both ends of the rack piston.**

(2) Tighten the adjusting bolt lock nut to the specified torque.

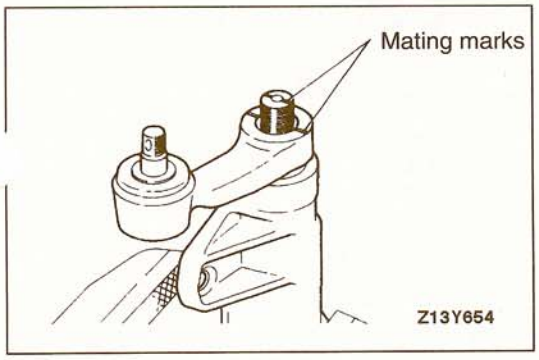


### ▶N◀PITMAN ARM INSTALLATION

Install the pitman arm to the gear box so that the mating marks are aligned.

# POWER STEERING OIL PUMP

37200520064

## REMOVAL AND INSTALLATION

**Pre-removal Operation**
- Power Steering Fluid Draining (Refer to P.37A-10.)

**Post-installation Operation**
- Power Steering Fluid Supplying (Refer to P.37A-10.)
- V-belt Tension Adjusting (Refer to P.37A-9.)
- Power Steering Fluid Line Bleeding (Refer to P.37A-11.)
- Oil Pump Pressure Check (Refer to P.37A-12.)

**<3.0L-12 VALVE engine>**

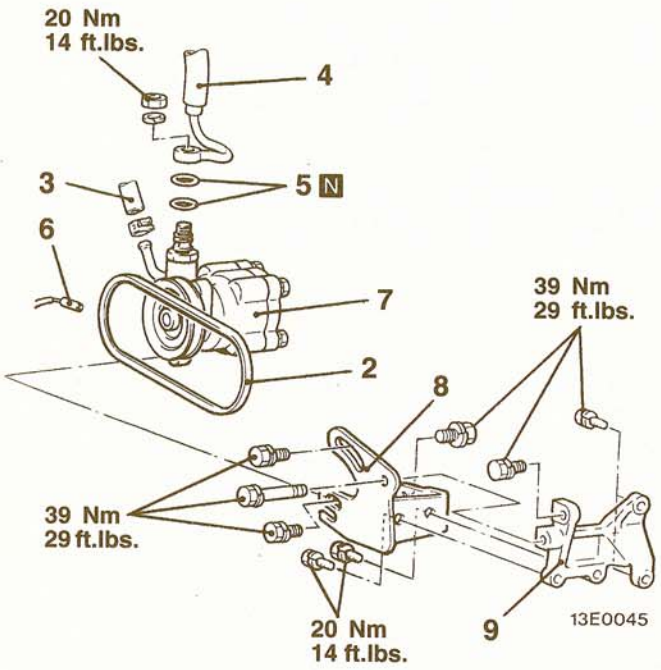


**<3.0L-24 VALVE engine, 3.5L engine>**

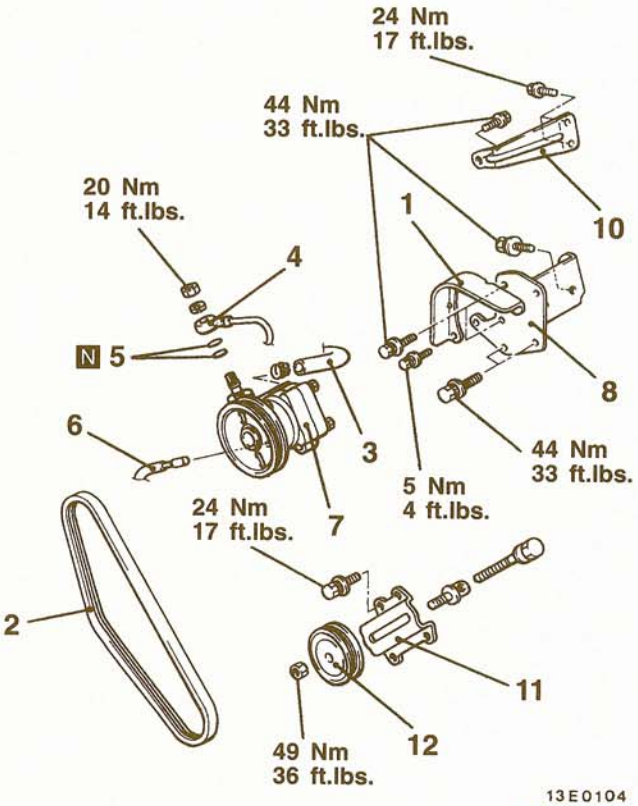


00001880

**Removal steps**
1. Oil pump pulley cover
2. Belt
3. Suction hose
- ▶A◀ 4. Pressure hose
5. O-ring
6. Pressure switch connector <Except 3.0L-12 VALVE engine M/T>
7. Oil pump
8. Oil pump bracket
9. Oil pump mounting bracket
10. Oil pump stay <3.5L engine>
11. Oil pump belt tensioner bracket
12. Oil pump belt tension pulley

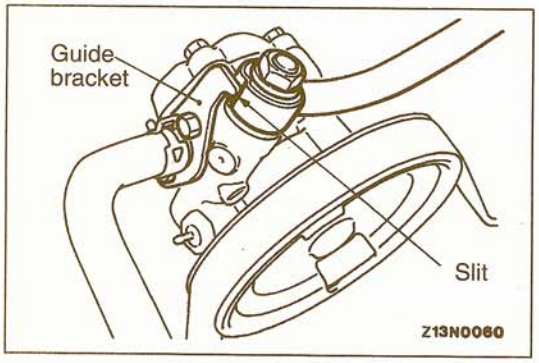


## INSTALLATION SERVICE POINT

### ▶A◀ PRESSURE HOSE INSTALLATION

Connect the pressure hose so that its slit part contacts the oil pump's guide bracket.

**TSB Revision**

## DISASSEMBLY AND REASSEMBLY

37200540060

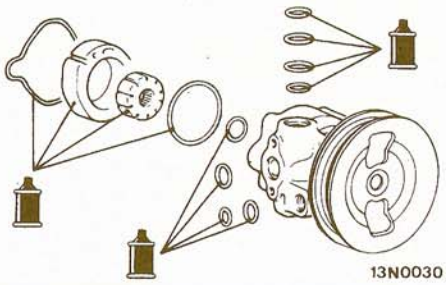


**Fluid:**
**MITSUBISHI PLUS ATF/"DEXRON" or "DEXRON II" Automatic transmission fluid**

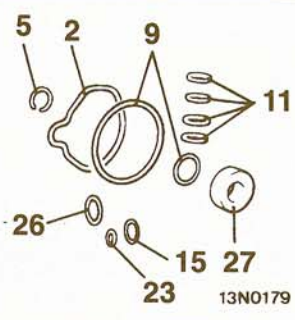


**Oil pump seal kit**

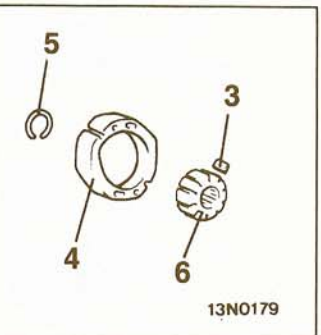


**Oil pump cartridge kit**

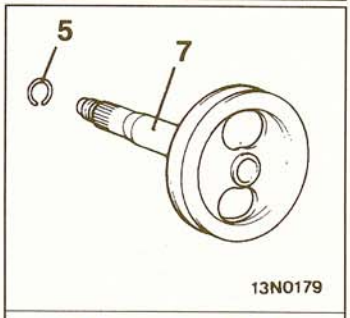


**Pulley and shaft kit**

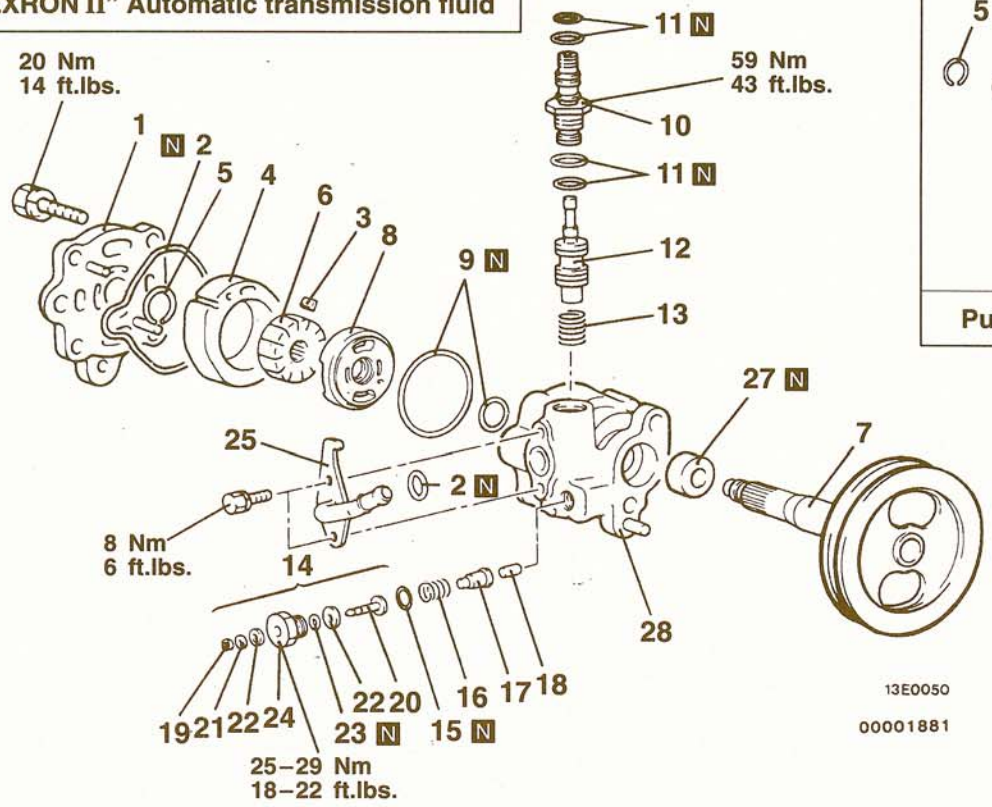


**Disassembly steps**

1. Pump cover
2. O-ring
▶H◀ 3. Vanes
▶G◀ 4. Cam ring
▶F◀ 5. Snap ring
▶E◀ 6. Rotor
7. Pulley assembly
▶D◀ 8. Side plate
▶B◀ 9. O-ring
10. Connection
▶B◀ 11. O-ring
12. Flow control valve
13. Flow control spring
14. Terminal assembly*
▶B◀ 15. O-ring*
▶C◀ 16. Spring*
17. Plunger*
18. Piston rod*
19. Snap ring*
20. Terminal*
21. Washer*
22. Insulator*
▶B◀ 23. O-ring*
24. Plug*
25. Suction connector
▶B◀ 26. O-ring
▶A◀ 27. Oil seal
28. Oil pump body

NOTE
*: Except 3.0L-12 VALVE engine M/T

**Caution**
**Do not disassemble the flow control valve.**

**TSB Revision**

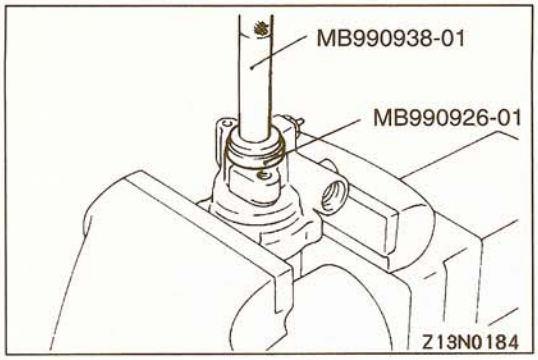


## REASSEMBLY SERVICE POINTS

### ▶A◀ OIL SEAL INSTALLATION

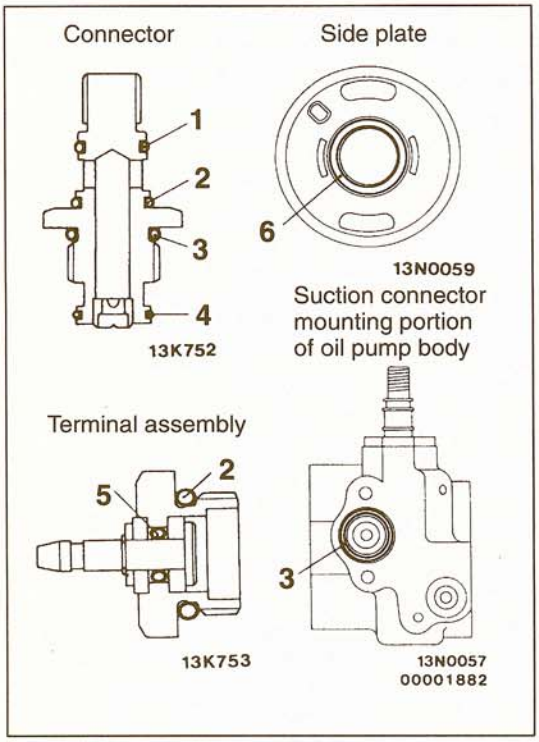


### ▶B◀ O-RINGS INSTALLATION

Apply specified automatic transmission fluid to the O-rings and install them.

| No. | I.D×Width mm (in.) |
|---|---|
| 1 | 11×1.9 (.433×.075) |
| 2 | 13×1.9 (.512×.075) |
| 3 | 17.8×2.4 (.701×.094) |
| 4 | 13.5×1.5 (.531×.059) |
| 5 | 3.8×1.9 (.150×.074) |
| 6 | 16.8×2.4 (.661×.094) |

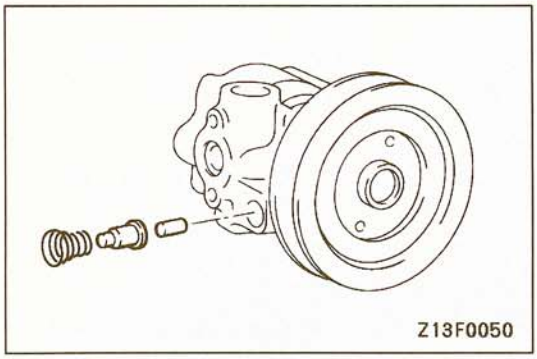


### ▶C◀ SPRING INSTALLATION

Fit the spring to the oil pump body with the larger-diameter end at the terminal assembly side.

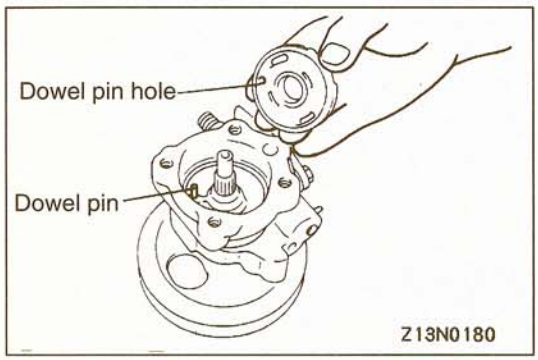


### ▶D◀ SIDE PLATE INSTALLATION

Line up the dowel pin hole of the side plate with the dowel pin of the pump body when installing the side plate.

TSB Revision

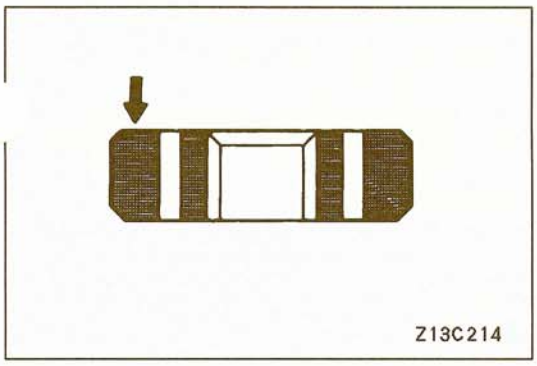


### ▶E◀ ROTOR INSTALLATION

Install the rotor to the pulley assembly so that the rotor's punch mark is at the pump cover side.

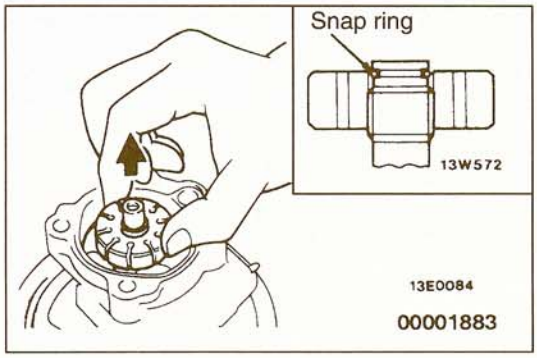


### ▶F◀ SNAP RING INSTALLATION

After installation of the snap ring, lift the rotor and check that the snap ring has entered the countersunk part.

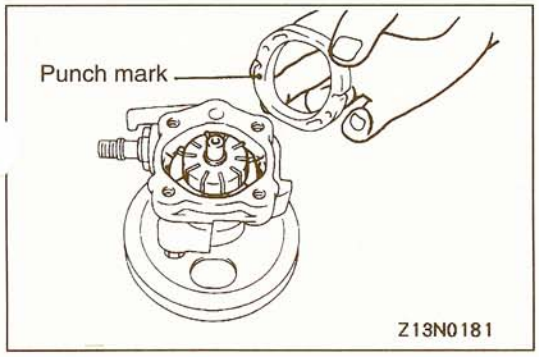


### ▶G◀ CAM RING INSTALLATION

Install the cam ring with the punch mark facing the side plate.

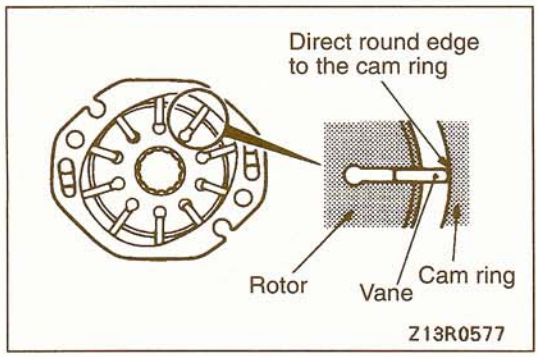


### ▶H◀ VANES INSTALLATION

Install the vanes to the rotor, being careful not to mistake the installation direction.

## INSPECTION

37200550049

- Check the flow control valve for clogging.
- Check the pulley assembly for wear or damage.
- Check the grooves of the rotor and the vane for "stepped" wear.
- Check the contact surface of cam ring and vanes for "stepped" wear.
- Check the vanes for damage.

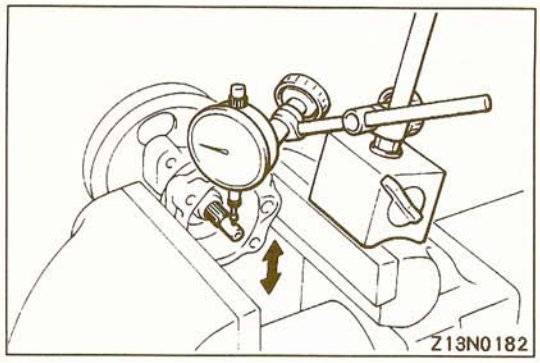


### CLEARANCE BETWEEN SHAFT AND PUMP BODY

(1) Place the dial gage against the end of the pulley assembly's shaft.
(2) Move the pulley assembly up and down and measu the play.

**Limit: 0.1 mm (.004 in.)**

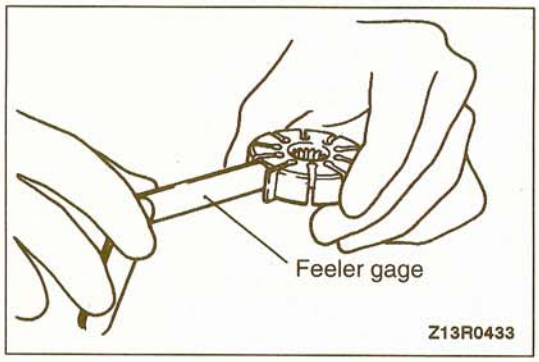


### GAP BETWEEN VANE AND ROTOR GROOVE

**Limit: 0.06 mm (.0024 in.)**

# STEERING HOSES

37200570076

## REMOVAL AND INSTALLATION

**Pre-removal Operation**
- Power Steering Fluid Draining (Refer to P.37A-10.)

**Post-installation Operation**
- Power Steering Fluid Supplying (Refer to P.37A-10.)
- Power Steering Fluid Line Bleeding (Refer to P.37A-11.)

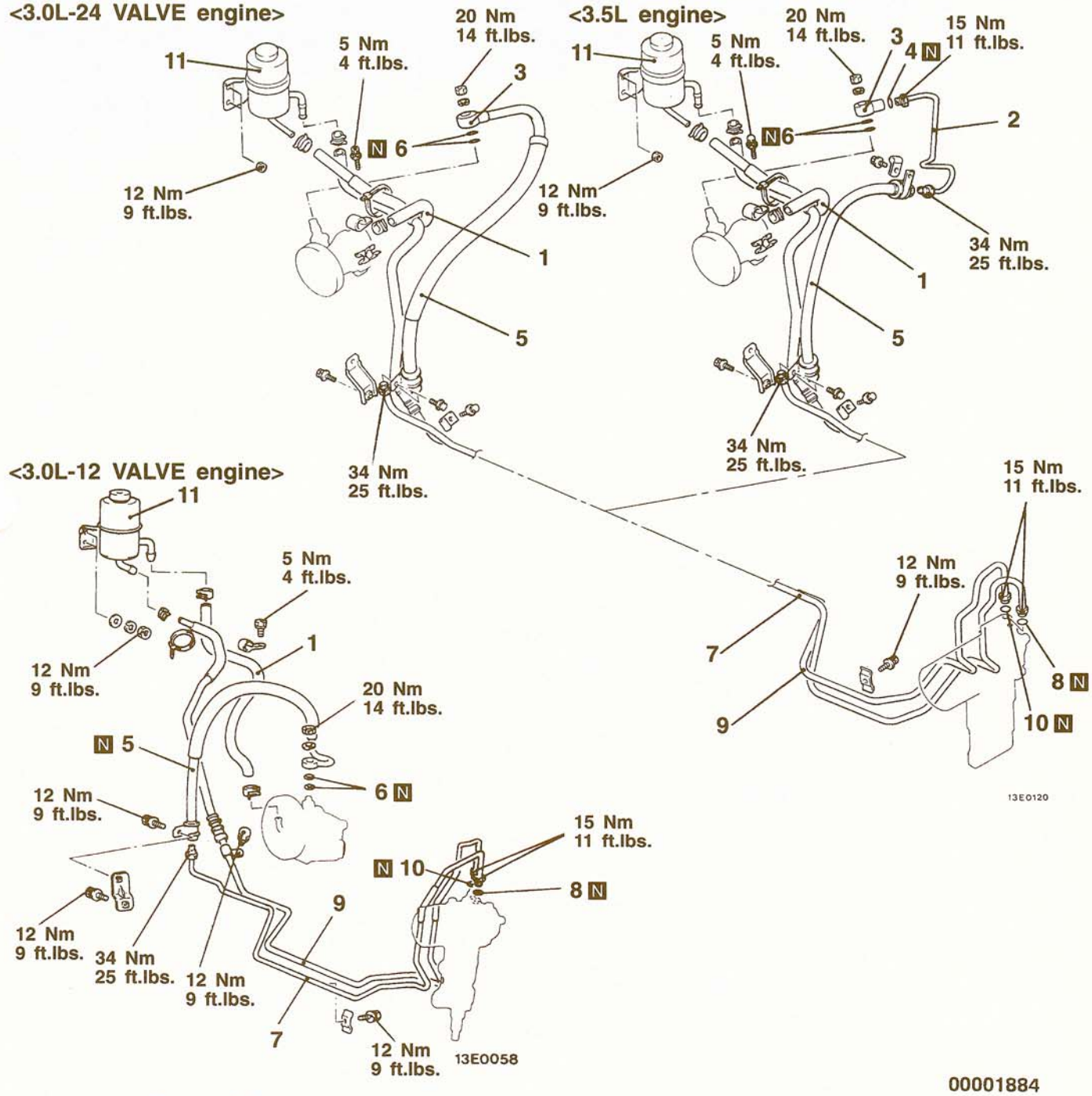


00001884

**Removal steps**

1. Suction hose
2. Pressure pipe A
3. Joint assembly
4. O-ring
▶A◀ 5. Pressure hose
6. O-ring
▶A◀ 7. Pressure pipe
8. O-ring
9. Return pipe
10. O-ring
11. Oil reservoir

**TSB Revision**

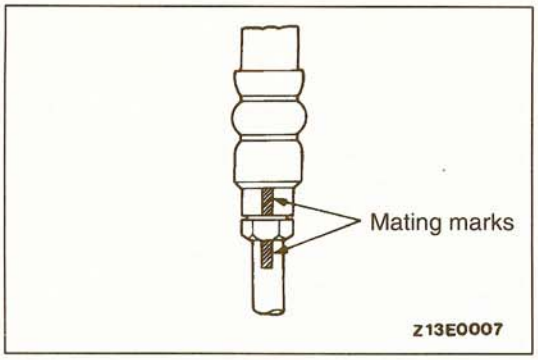


## INSTALLATION SERVICE POINT

### ▶A◀ PRESSURE PIPE/PRESSURE HOSE INSTALLATION

(1) Install so that the pressure pipe and pressure hose matir marks are aligned.

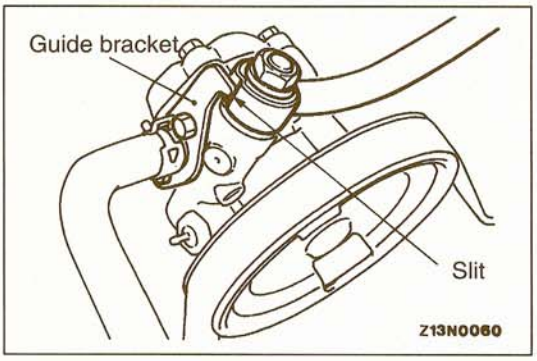


(2) Connect the pressure hose so that its slit part contacts the oil pump guide bracket.

# STEERING LINKAGE

37200600010

## REMOVAL AND INSTALLATION

**Post-installation Operation**
- Front Wheel Alignment Adjustment (Toe-in)
  (Refer to GROUP 33A – On-vehicle Service.)

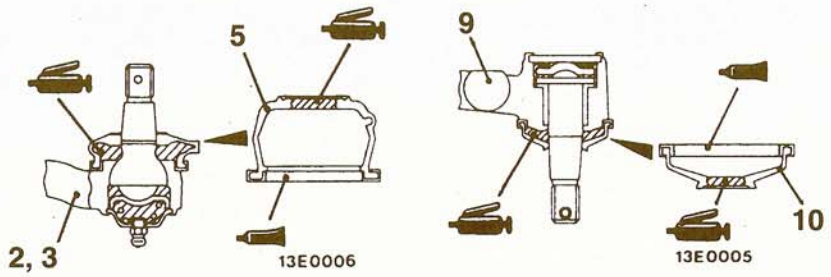


**Sealant: 3M ATD Part No. 8663 or equivalent**

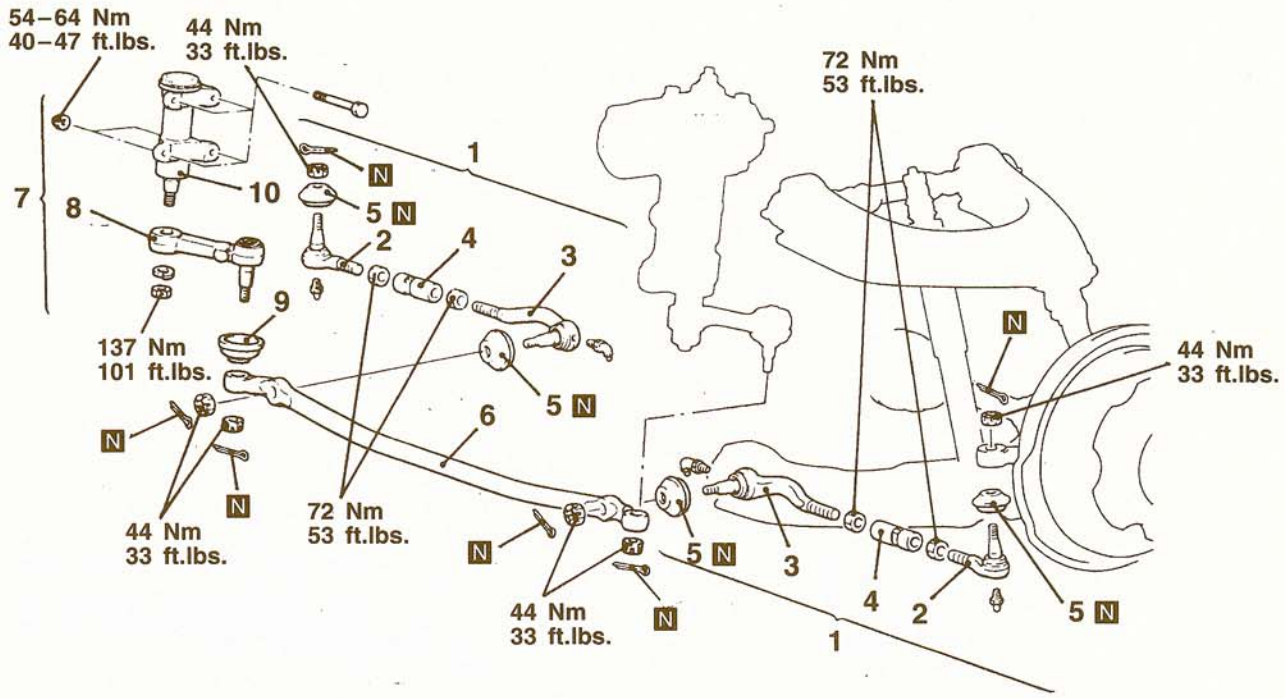


13E0073
00001885

**Removal steps**

◀A▶ 1. Tie rod assembly
▶A◀ 2. Tie rod end, outer
▶A◀ 3. Tie rod end, inner
▶A◀ 4. Pipe
5. Dust cover
◀B▶ 6. Relay rod
7. Idler arm (complete)
◀C▶ 8. Idler arm
9. Dust cover
10. Idler arm support

**TSB Revision**

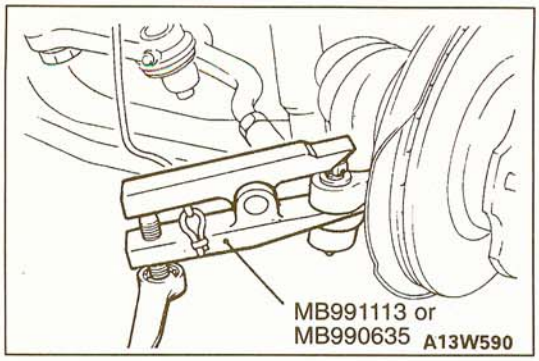


## REMOVAL SERVICE POINTS

### ◀A▶ TIE ROD ASSEMBLY DISCONNECTION

Use the special tool to disconnect the tie rod ends, and the remove the tie rod assembly.

**Caution**
1. **Use cord to bind the special tool closely so it won't become separated.**
2. **The nut should only be loosened, not removed.**

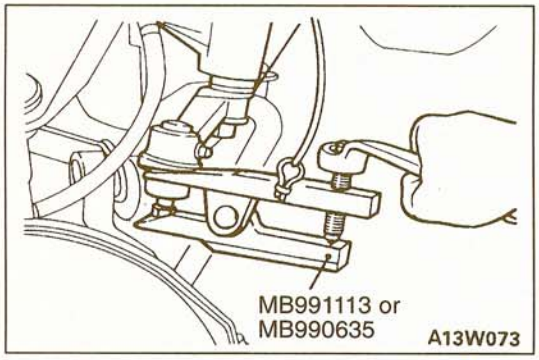


### ◀B▶ RELAY ROD DISCONNECTION

Use the special tool to disconnect the connecting portions of the idler arm and the steering gear box, and then remove the relay rod.

**Caution**
1. **Use cord to bind the special tool closely so it won't become separated.**
2. **The nut should only be loosened, not removed.**

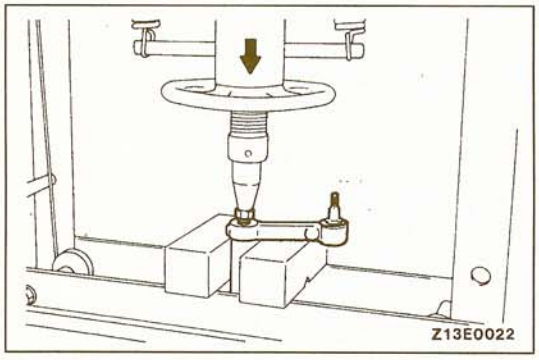


### ◀C▶ IDLER ARM REMOVAL

Use a bench press to remove the idler arm.

**Caution**
**The nut should only be loosened, not removed.**

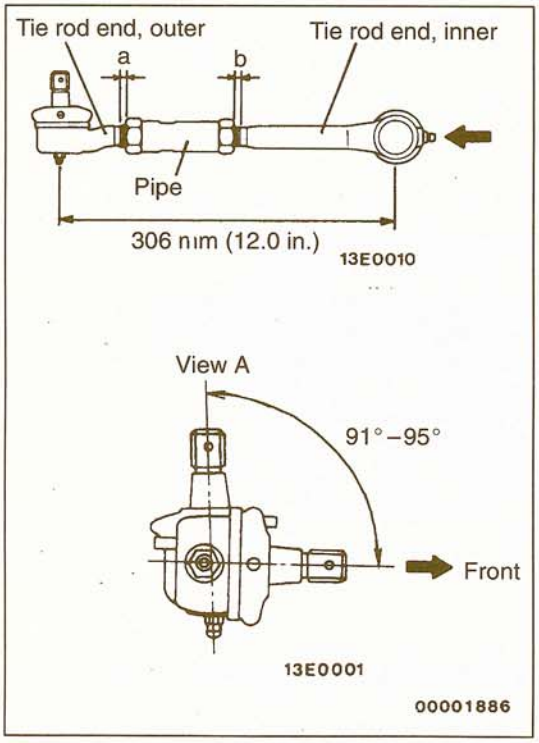


## INSTALLATION SERVICE POINTS

### ▶A◀ PIPE/TIE ROD END, INNER/TIE ROD END, OUTER INSTALLATION

(1) Install the tie rod assembly so that the dimension is as shown in the illustration.

NOTE
The illustration at left shows the left-side tie rod assembly. The right-side tie rod assembly is symmetrical to the left-side assembly.

(2) Adjust the pipe so that the difference between dimensions a and b is 1.5 mm (.059 in.) or less, and then provisionally tighten the lock nut.

NOTE
Fully tighten the lock nut after the tie rod assembly is installed to the body and the toe-in has been adjusted.

## INSPECTION

37200610013

- Check the idler arm support for damage and deformation.
- Check the idler arm for damage and deformation.
- Check the dust covers for damage and cracks.
- Check the tie rods for damage and deformation.
- Check the relay rod for bends and damage.
- Check the grease nipples for clogging and looseness.

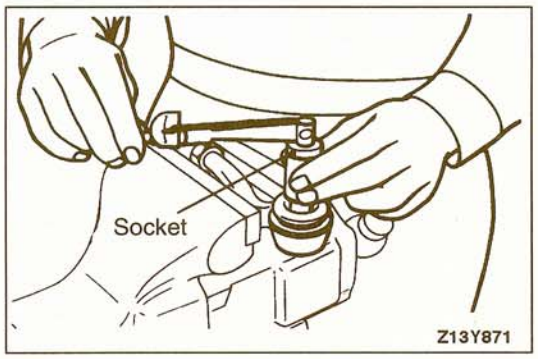


### BALL JOINT STARTING TORQUE CHECK

**Standard value:**
**Tie rod end 1–3 Nm (9–26 in.lbs.)**
**Idler arm 0.5–2.0 Nm (4–17 in.lbs.)**

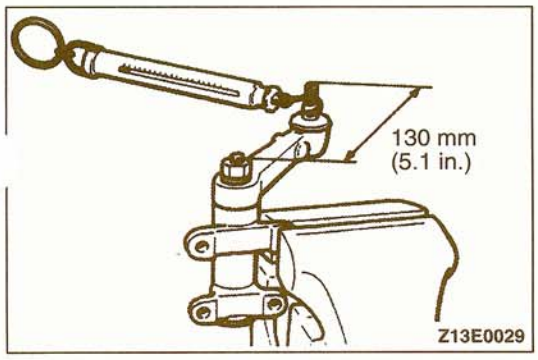


### IDLER ARM STARTING TORQUE CHECK

**Standard value:**
**0.3–2.0 Nm (3–17 in.lbs.)**
**[2.3–15.4 N (.5–33.9 lbs.)]**

NOTES

# SERVICE BRAKES

## CONTENTS

35109000098

BASIC BRAKE SYSTEM ..... 35A

ANTI-LOCK BRAKING SYSTEM (ABS) <2WD> ..... 35B

ANTI-LOCK BRAKING SYSTEM (ABS) <AWD> ..... 35C

REAR ANTI-LOCK BRAKING SYSTEM (REAR ABS) ..... 35D

NOTE
The tinted sections are not included in this manual.

NOTES

# BASIC BRAKE SYSTEM

## CONTENTS

35109000104


**BRAKE LINE** ..... 25

**BRAKE PEDAL** ..... 18

**FRONT DISC BRAKE** ..... 26

**GENERAL SPECIFICATIONS** ..... 2

**LUBRICANTS** ..... 3

**MASTER CYLINDER AND BRAKE BOOSTER** ..... 20

- Master Cylinder ..... 23

**ON-VEHICLE SERVICE** ..... 6

- Bleeding ..... 9
- Brake Booster Operating Test ..... 6
- Brake Drum Inside Diameter Check ..... 17
- Brake Fluid Level Sensor Check ..... 7
- Brake Lining and Brake Drum Contact Check ..... 17
- Brake Lining Thickness Check ..... 16
- Brake Pedal Check and Adjustment ..... 6
- Check Valve Operation Check ..... 7
- Front Brake Disc Runout Check ..... 12
- Front Brake Disc Runout Correction ..... 13
- Front Brake Disc Thickness Check ..... 13
- Front Disc Brake Pad Check and Replacement ..... 10
- Front Disc Brake Rotor Check ..... 12
- Load Sensing Proportioning Valve Function Test ..... 8
- Load Sensing Spring Length Check and Adjustment ..... 8
- Rear Brake Disc Runout Check ..... 15
- Rear Brake Disc Runout Correction ..... 16
- Rear Brake Disc Thickness Check ..... 15
- Rear Disc Brake Pad Check and Replacement ..... 14

**REAR DISC BRAKE** ..... 31

**SEALANTS** ..... 3

**SERVICE SPECIFICATIONS** ..... 2

**TROUBLESHOOTING** ..... 4

## GENERAL SPECIFICATIONS

35100020017

| Items | | Specifications |
|---|---|---|
| Master cylinder | Type | Tandem Type (with level sensor) |
| | I.D. mm (in.) | 23.8 (15/16) |
| Brake booster | Type | Vacuum Type, tandem |
| | Effective dia. of power cylinder mm (in.) | 205+230 (8+9) |
| | Boosting ratio | 6.0 |
| Proportioning valve type | | Load sending proportioning type |
| Front brakes | Type | Floating caliper, dual pistons, ventilated disc (M-R57W) |
| | Disc effective dia.×thickness mm (in.) | 228×24 (8.98×.94) |
| | Wheel cylinder I.D. mm (in.) | 42.8 (1 11/16)×2 |
| | Lining thickness mm (in.) | 10 (.39) |
| | Clearance adjustment | Automatic |
| Rear brakes | Type | Floating caliper, single piston, solid disc (M-R59S) |
| | Disc effective dia.×thickness mm (in.) | 272×18 (10.71×.71) |
| | Wheel cylinder I.D. mm (in.) | 42.8 (1 11/16) |
| | Lining thickness mm (in.) | 9 (.354) |
| | Clearance adjustment | Automatic |

## SERVICE SPECIFICATIONS

35100030065

| Items | | | | Standard value | Limit |
|---|---|---|---|---|---|
| Brake pedal height mm (in.) | | | | 186–191 (7.3–7.5) | – |
| Brake pedal to firewall clearance mm (in.) | | | | 100 (3.94) or more | – |
| Brake pedal free play mm (in.) | | | | 3–8 (.12–.32) | – |
| Load sensing spring length mm (in.) | | | | 224–228 (8.8–9.0) | – |
| Load sensing proportioning valve output pressure MPa (psi) | When load sensing spring length is 226.7mm (8.9 in.) | Input pressure | at 10 (1,422) | 6.14–7.04 (873.3–1,001.3) | – |
| | | | at 18 (2,560) | 7.94–9.24 (1,129.3–1.314.2) | – |
| | When load sensing spring length is 257.7mm (10.1 in.) | Input pressure | at 18 (2,560) | 13.1–15.1 (1,863.3–2,147.7) | – |

**TSB Revision**

| Items | | Standard value | Limit |
|---|---|---|---|
| Booster push rod to master cylinder piston clearance mm (in.) | | 0.65–0.90 (.026–.035) | – |
| Brake dragging force N (lbs.)<br>[Brake dragging torque] Nm (ft.lbs.) | | 57 (13) or less<br>[4 (3)] or less | – |
| Pad thickness mm (in.) | Front | 10.0 (.39) | 2.0 (.079) |
| | Rear | 9.0 (.35) | – |
| Disc thickness mm (in.) | Front <3.0L engine> | 24 (.94) | 22.4 (.882) |
| | Front <3.5L engine> | 27 (1.06) | 25.4 (1.0) |
| | Rear | 18 (.71) | 16.4 (.646) |
| Brake disc runout mm (in.) | Front | – | 0.1 (.0039) |
| | Rear | – | 0.08 (.0031) |
| Hub end play mm (in.) | | – | 0.25 (.0098) |
| Lining thickness mm (in.) | | 6.5 (.256) | 4.5 (.177) |
| Brake drum inside diameter mm (in.) | | 197 (7.756) | 198 (7.795) |

## LUBRICANTS

35100040051

| Items | Specified lubricants |
|---|---|
| Brake fluid | DOT 3 or DOT 4 |
| Brake piston boot inner surfaces | Repair kit grease |
| Lock pin boot inner surfaces | |
| Guide pin boot inner surfaces | |

## SEALANTS

35100050054

| Items | Specified sealants |
|---|---|
| Thread part of fitting | 3M ATD Part No. 8661, 3M ATD Part No. 8663 or equivalent |

98-35-001

TSB Revision 97-35-003

# TROUBLESHOOTING

35100070043

| Trouble Symptom | Probable Cause | Remedy |
|---|---|---|
| Vehicle pulls to one side when brakes are applied | Grease or oil on pad | Replace |
| | Poor pad contact | Correct |
| Insufficient braking power | Low or deteriorated brake fluid | Refill or change |
| | Air in brake system | Bleed the air. |
| | Vapor lock caused by dragging of the pad | Correct |
| | Grease or oil on pad | Replace |
| | Poor pad contact | Correct |
| | Malfunction of brake booster | Correct |
| | Clogged brake line | Correct |
| | Malfunction of proportioning valve | Replace |
| Increased pedal stroke (Reduced pedal to floorboard clearance) | Air in brake system | Bleed the air. |
| | Worn pad | Replace |
| | Excessive push rod to master cylinder clearance | Adjust |
| | Malfunction of master cylinder | Replace |
| Brake drag | Incomplete release of parking brake | Correct |
| | Incorrect parking brake adjustment | Adjust |
| | Worn brake pedal return spring | Replace |
| | Lack of lubrication in sliding parts | Lubricate |
| | Improper push rod to master cylinder clearance | Adjust |
| | Malfunction of master cylinder piston return spring | Replace |
| | Clogged master cylinder return port | Correct |
| Scraping or grinding noise when brakes are applied | Worn brake pad | Replace |
| | Caliper to wheel interference | Correct or replace |
| | Interference between dust cover and disc | Correct or replace |
| | Bent brake backing plate | Correct or replace |
| | Cracked brake disc | Correct or replace |

| Trouble Symptom | Probable Cause | Remedy |
|---|---|---|
| Squealing, groaning or chattering noise when brakes are applied | Missing or damaged brake pad anti-squeak shim | Replace |
| | Worn or scored brake discs and pads | Correct or replace |
| | Burred or rusted calipers | Clean or deburr |
| | Incorrect brake pedal or booster push rod | Adjust |
| Squealing noise when brakes are not applied | Bent or loose backing plate | Replace |
| | Dust cover or brake disc contact | Correct |
| | Rusted, stuck | Lubricate or replace |
| | Worn, damaged or insufficiently lubricated wheel bearings | Lubricate or replace |
| | Improper positioning of pads in caliper | Correct |
| | Improper installation of support mounting to caliper body | Correct |
| | Poor return of brake booster or master cylinder or wheel cylinder | Replace |
| Groaning, clicking or rattling noise when brakes are not applied | Stones or foreign material trapped inside wheel covers | Remove stones, etc. |
| | Loose wheel nuts | Re-tighten |
| | Failure of pad shim | Replace |
| | Worn, damaged or insufficiently lubricated wheel bearings | Lubricate or replace |

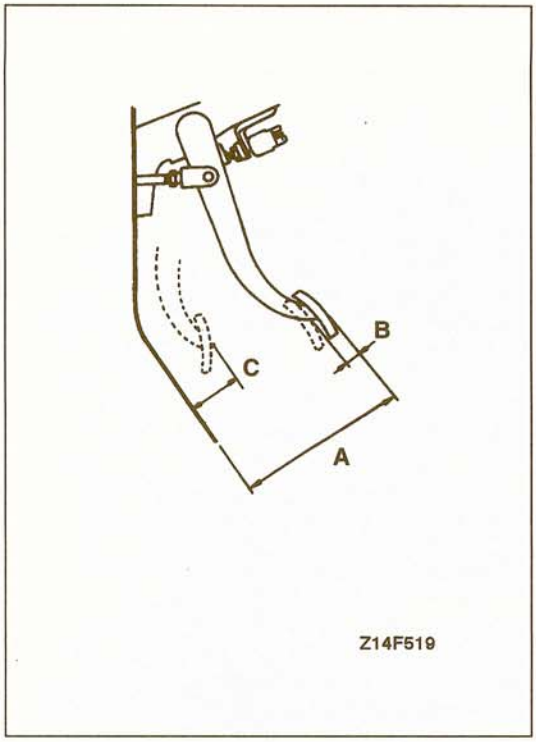


# ON-VEHICLE SERVICE

35100090056

## BRAKE PEDAL CHECK AND ADJUSTMENT

1. Turn up the carpet, etc. under the brake pedal.
2. Measure the brake pedal height (A) as shown in the illustration.

   **Standard value (A): 186–191 mm (7.3–7.5 in.)**

3. Start the engine, depress the brake pedal with approximately 500 N (110 lbs.) of force, and measure the clearance between the brake pedal and the firewall.

   **Standard value (C): 100 mm (3.94 in.) or more**

4. Turn back the carpet, etc.
5. While the engine is stopped, depress the brake pedal two or three times. After thus eliminating the negative pressure in the brake booster, press the pedal down by hand, and confirm that the free play (B) is within the standard value range.

   **Standard value (B): 3–8 mm (.12–.31 in.)**

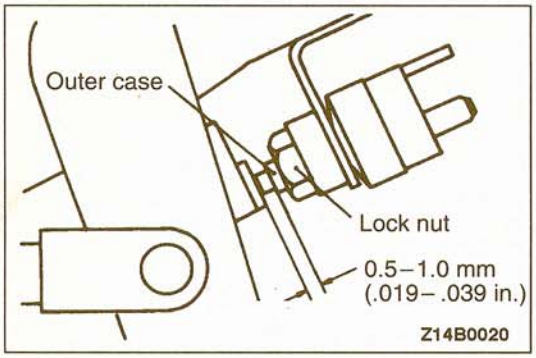


6. Adjust the brake pedal height.
   (1) Loosen the lock nut to sufficiently loosen the stop light switch.
   (2) Adjust the brake pedal height by turning the operating rod with pliers (with lock nut loosened).
   (3) After turning the stop light switch until it contacts the pedal stop (until immediately before the brake pedal begins to move), turn the stop light switch back 1/2 to 1 revolution and secure with a lock nut.

   **Caution**
   **Check that the stop light is not illuminated when the brake pedal is not depressed.**

7. For vehicles with automatic transmission, check the shift-lock mechanism. (Refer to GROUP 23A – On-vehicle Service.)

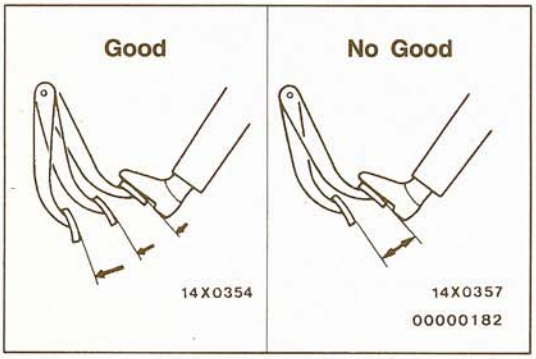


## BRAKE BOOSTER OPERATING TEST

35100100056

For simple checking of the brake booster operation, carry out the following tests:

1. Run the engine for one or two minutes, and then stop it. If the pedal depresses fully the first time but gradually becomes higher when depressed succeeding times, the booster is operating properly. If the pedal height remains unchanged, then there is a malfunction of the booster.

TSB Revision

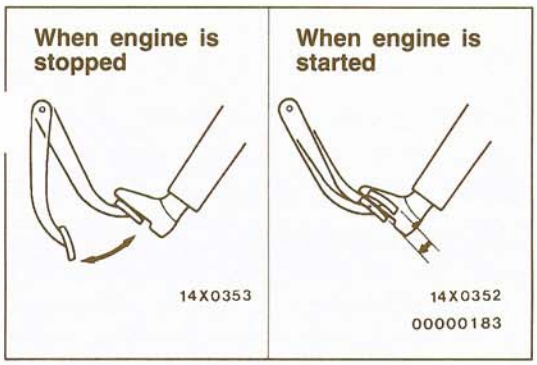


2. While the engine is stopped, depress the brake pedal several times.
   Then depress the brake pedal and start the engine.
   If the pedal moves downward slightly, the booster is in good condition. If there is no change, there is a malfunction of the booster.

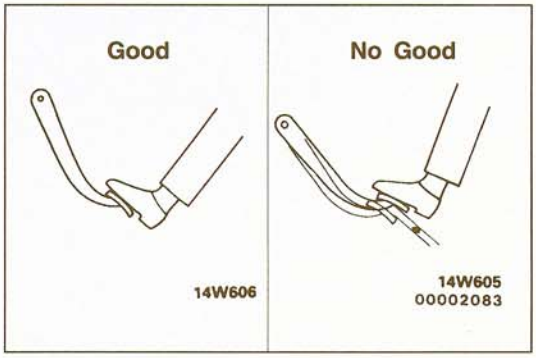


3. While the engine is running, depress the brake pedal and then stop the engine.
   Keep the pedal depressed for 30 seconds. If the pedal height does not change, the booster is in good condition.
   If the pedal rises, there is a malfunction of the booster.

If the above three tests are okay, the booster performance can be judged to be okay.
If any above three test is not okay, there is a malfunction of the check valve, vacuum hose or booster.

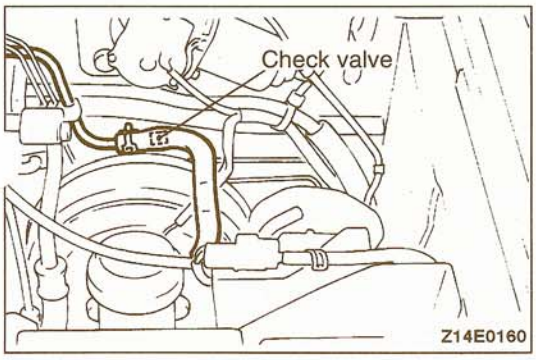


## CHECK VALVE OPERATION CHECK 35100900069

When checking the check valve, keep the check valve inserted into the vacuum hose.

1. Disconnect the vacuum hose.

   NOTE
   The check valve is press-fitted inside the vacuum hose.

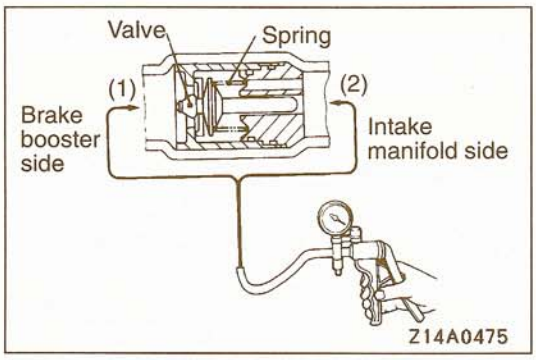


2. Use a vacuum pump to check the operation of the check valve.

| Vacuum pump connection | Accept/reject criteria |
|---|---|
| Connection at the brake booster side (1) | Negative pressure is created and maintained. |
| Connection at the engine side (2) | Negative pressure is not created. |

**Caution**
**If there is a malfunction of the check valve, replace it together with the vacuum hose as an assembly.**

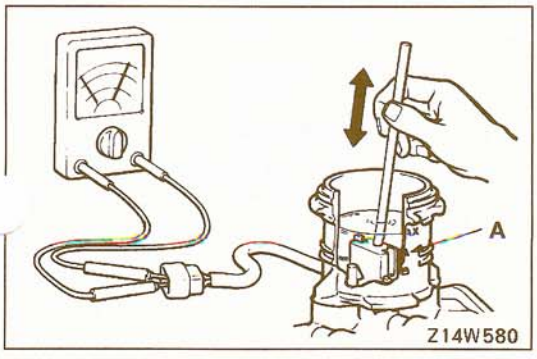


## BRAKE FLUID LEVEL SENSOR CHECK 35100910055

The brake fluid sensor is in good condition if there is no continuity when the float surface is above A and if there is continuity when the float surface is below A.

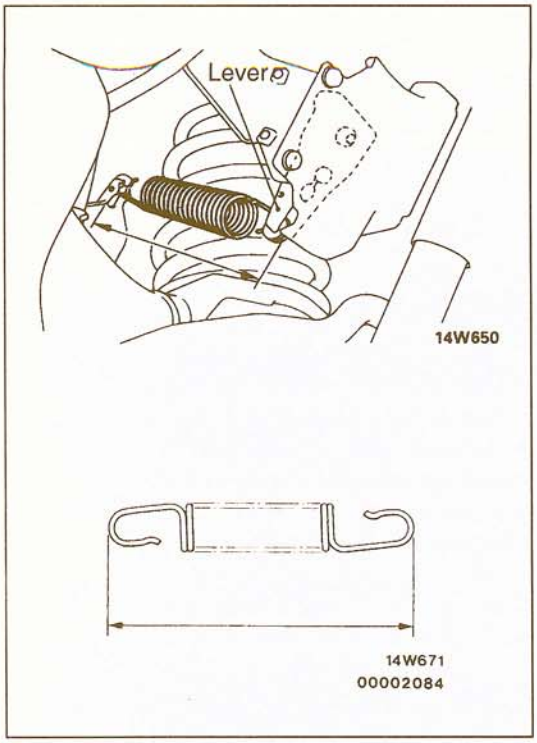


## LOAD SENSING SPRING LENGTH CHECK AND ADJUSTMENT

35100120014

1. Park the vehicle on a level ground. The vehicle shou' be unloaded and supported only by wheels.

   **Caution**
   **Never support the vehicle with jacks or other similar means.**

2. With the lever pressed all the way to the load-sensing proportioning valve side, check whether the length of the spring (the length between its ends) shown in the illustration is at the standard value.

   **Standard value: 224–228 mm (8.8–9.0 in.)**

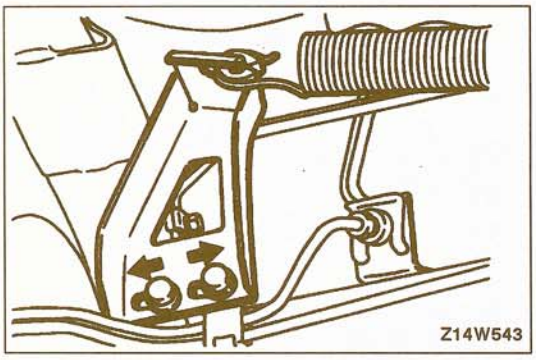


3. If the spring length is not within the standard value, loosen the bolt attaching the support and adjust the distance by moving the support.

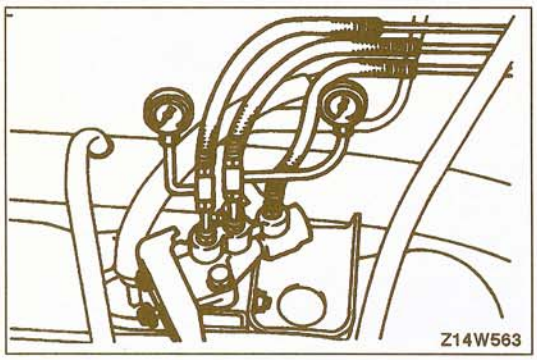


## LOAD SENSING PROPORTIONING VALVE FUNCTION TEST

35100130017

1. Connect pressure gages to the input and output ports of the load sensing proportioning valve. Bleed the system.

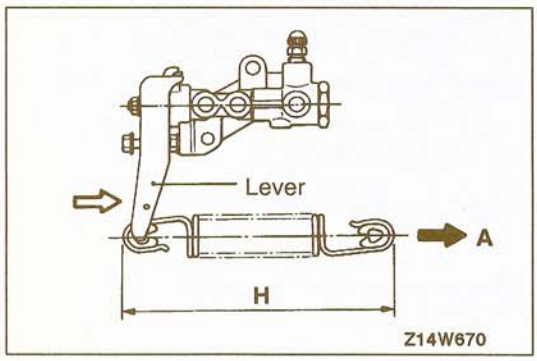


2. Disconnect the spring at the support side.
3. Place the spring so that it is in parallel with the load-sensing proportioning valve, and then pull in the direction indicated by arrow A so that its length H shown in the illustration (the length between its ends) is as noted below.

   NOTE
   At this time the lever is pressed all the way to th. load-sensing proportioning valve side.
   Check that the output fluid pressure is within the standard value at this time.

**TSB Revision**

**Standard value:**

| Items | Spring length H mm (in.) | Input fluid pressure MPa (psi) | Output fluid pressure MPa (psi) |
|---|---|---|---|
| Specifications | 226.7 (8.9) | 10 (1,422) | 6.14–7.04 (873.3–1,001.3) |
| | | 18 (2,560) | 7.94–9.24 (1,129.3–1,314.2) |

4. In the same manner as in step 3., check that the output fluid pressure is within the standard valve when the spring length H is the dimension noted below relative to the load-sensing proportioning valve input fluid pressure.

**Standard value:**

| Items | Spring length H mm (in.) | Input fluid pressure MPa (psi) | Output fluid pressure MPa (psi) |
|---|---|---|---|
| Specifications | 257.7 (10.1) | 18 (2,560) | 13.1–15.1 (1,863.3–2,147.7) |

5. After making the check, install the spring. Disconnect the pressure gages from the load-sensing proportioning valve and bleed the air.

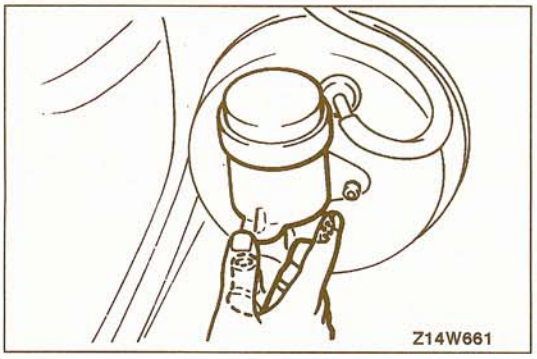


## BLEEDING

35100140058

**Caution**
**Use the specified brake fluid. Avoid using a mixture of the specified brake fluid and other fluid.**

**Specified brake fluid: DOT 3 or DOT 4**

### MASTER CYLINDER AIR BLEEDING

If there is no brake fluid in the master cylinder, bleed air from the master cylinder by the following procedure.
(1) Supply brake fluid to the reservoir tank.
(2) Depress and hold the brake pedal.
(3) another person should then plug the outlet of the master cylinder with a finger.
(4) In the condition in step (3), release the brake pedal.
(5) Repeat steps (2) to (4) three or four times so as to supply brake fluid inside the master cylinder.

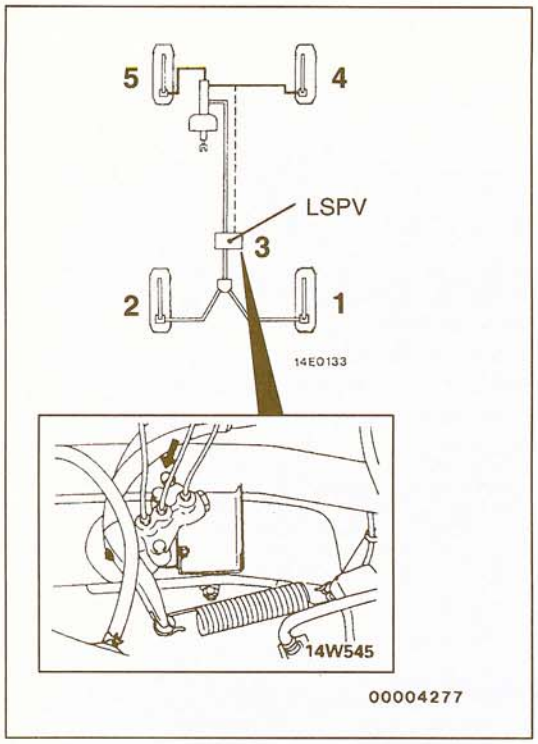


### BRAKE PIPE LINE AIR BLEEDING

Bleed the brake system in the sequence shown in the illustration.

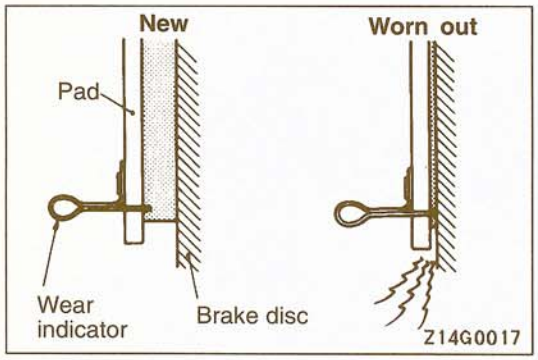


## FRONT DISC BRAKE PAD CHECK AND REPLACEMENT

35100150051

NOTE
The brake pads have wear indicators that contact the brak disc when the brake pad thickness becomes 2 mm (.08 in.). The wear indicators emit a squealing sound to warn the driver to have the pads replaced and to have the brake system checked.

1. Check brake pad thickness through caliper body check port.

   **Standard value: 10.0 mm (.39 in.)**

   **Limit: 2.0 mm (.08 in.)**

   **Caution**
   1. **When the limit is exceeded, the brake pads on both the left and right wheels must be replaced as a set.**
   2. **If there is a significant difference in the thicknesses of the pads on the left and right sides, check the sliding condition of the piston, lock pin and guide pin.**

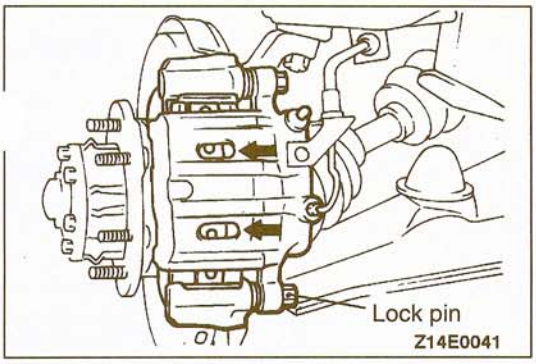


2. Remove the lock pin, and then lift up the caliper assembly and secure it with wire.

**Caution**
**Do not wipe off the special grease that is on the lock pin or allow it to contaminate the lock pin.**

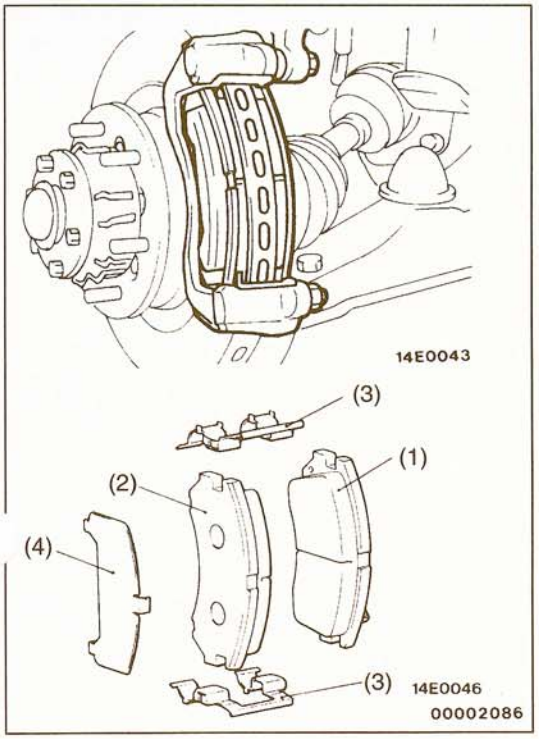


3. Remove the following parts from the caliper support.
   (1) Pad and wear indicator assembly
   (2) Pad assembly
   (3) Clip
   (4) Outer shim

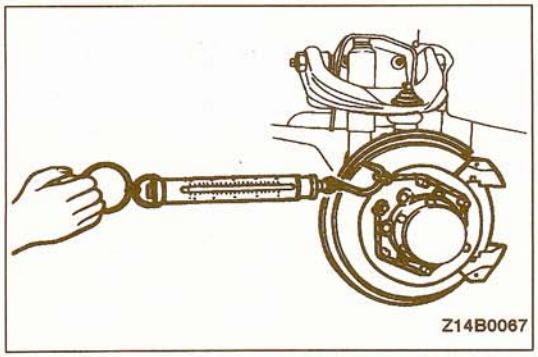


4. In order to measure the dragging force of the disc brakes after installation of the brake pads, use a spring balance to measure the rotational sliding resistance of the hub in the forward direction with the pads removed.
5. Securely attach the pad clip to the caliper support.

**Caution**
**Do not deposit grease or other dirt on pad or brake disc friction surfaces.**

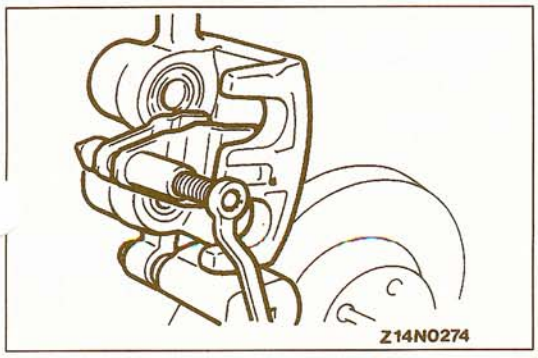


6. Clean the piston and press the piston into the cylinder. Be careful that the piston boot does not become caught when lowering the caliper assembly and installing the lock pin.
7. Start the engine and, after strongly depressing the brake pedal 2-3 times, stop the engine.
8. Turn the brake disc forward 10 times.

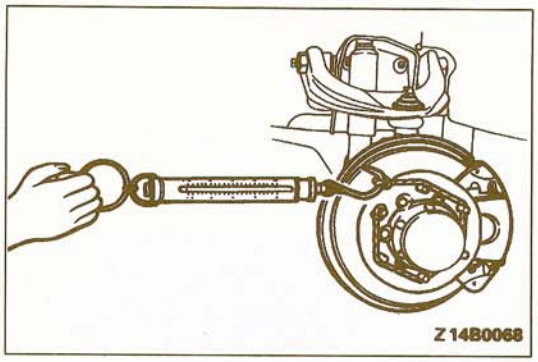


9. Use a spring balance to measure the rotational sliding resistance of the hub in the forward direction.
10. Calculate the dragging force of the disc brakes (the difference between the values measured in steps (8) ar (3)).

    **Standard value: 57 N (13 lbs.) or less**

11. If the dragging force exceeds the standard value, disassemble and clean the piston. Check for corrosion or a worn piston seal, and check the sliding condition of the lock pin sleeve and guide pin sleeve.

## FRONT DISC BRAKE ROTOR CHECK 35100270030

**Caution**
**When servicing disc brakes, it is necessary to exercise caution to keep the disc brakes within the allowable service values in order to maintain normal brake operation.**

Before re-finishing or re-processing the brake disc surface, the following conditions should be checked.

| Inspection Items | Remarks |
|---|---|
| Scratches, rust, saturated lining materials and wear | If the vehicle is not driven for a certain period, the sections of the discs that are not in contact with the lining will become rusty, causing noise and shuddering. |
| | If grooves resulting from excessive disc wear and scratches are not removed prior to installing a new pad assembly, there will momentarily be inappropriate contact between the disc and the lining (pad). |
| Runout or drift | Excessive runout or drift of the discs will increase the pedal depression resistance due to piston knock-back. |
| Change in thickness (parallelism) | If the thickness of the disc changes, this will cause pedal pulsation, shuddering and surging. |
| Inset or warping (flatness) | Overheating and improper handling while servicing will cause inset or warping. |

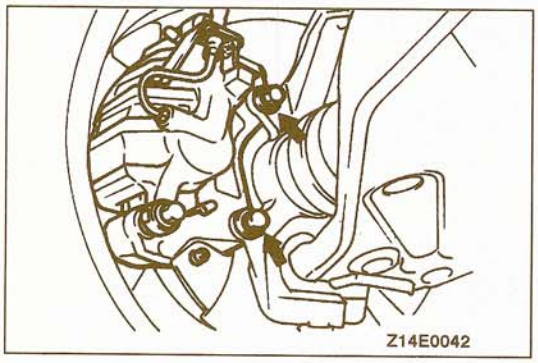


## FRONT BRAKE DISC RUNOUT CHECK 35100170057

1. Remove the caliper support; then raise the caliper assembly upward and secure by using wire.
2. Inspect the disc surface for grooves, cracks, and rust. Clean the disc thoroughly and remove all rust.

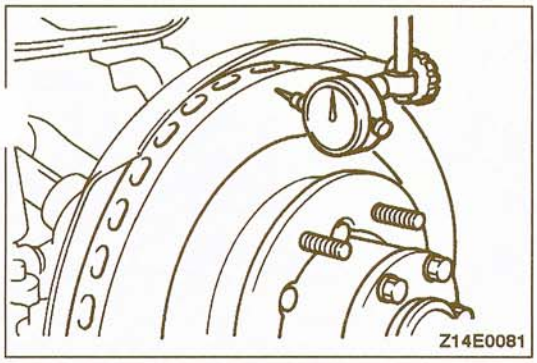


3. Place a dial gage approximately 5 mm (.2 in.) from the outer circumference of the brake disc, and measure the runout of the disc.

   **Limit: 0.1 mm (.0039 in.)**

## FRONT BRAKE DISC RUNOUT CORRECTION

35100180050

1. If the runout of the brake disc is equivalent to or exceeds the limit specification, change the phase of the disc and hub, and then measure the runout again. (Refer to P.35A-12.)
2. If the runout cannot be corrected by changing the phase of the brake disc, replace the disc or turn rotor with on the car type brake lathe ("MAD, DL-8700PF" or equivalent).

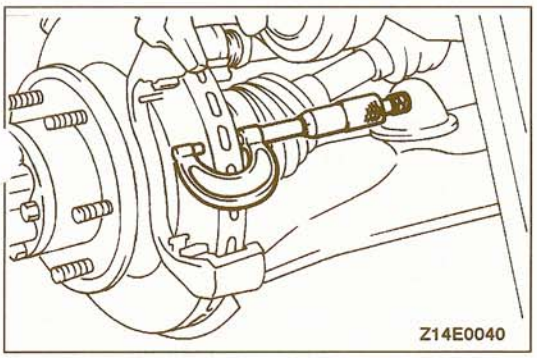


## FRONT BRAKE DISC THICKNESS CHECK

35100160054

1. Inspect the disc surface for grooves, cracks, and rust. Clean the disc thoroughly and remove all rust.
2. Using a micrometer, measure disc thickness at eight positions, approximately 45° apart and 10 mm (.39 in.) in from the outer edge of the disc.

   **Standard value:**
   **24 mm (.94 in.) <3.0L engine>**
   **27 mm (1.06 in.) <3.5L engine>**

   **Limit:**
   **22.4 mm (.882 in.) <3.0L engine>**
   **25.4 mm (1.0 in.) <3.5L engine>**

   The difference between any thickness measurements should not be more than 0.015 mm (.0006 in.)
3. Replace the discs and pad assembly for both left and right sides of the vehicle if they are worn beyond the specified limit.
4. If thickness variation exceeds the specification, replace the disc or turn rotor with on the car type brake lathe ("MAD, DL-8700PF" or equivalent).

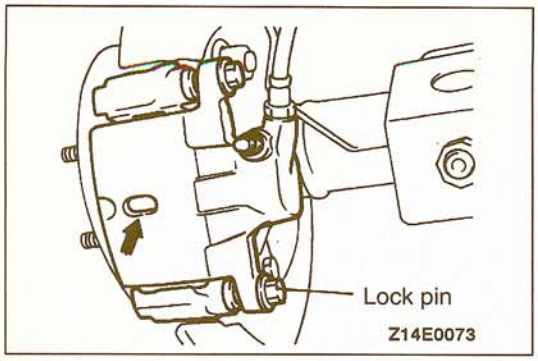


## REAR DISC BRAKE PAD CHECK AND REPLACEMENT

35100190039

1. Check the brake pad thickness through the caliper body check port.

   **Standard value: 9.0 mm (.35 in.)**

   **Limit: 2.0 mm (.079 in.)**

   **Caution**
   **1. When the limit is exceeded, replace the pads at both sides, and also replace the brake pads for the wheels on the opposite side at the same time.**
   **2. If there is a significant difference in the thicknesses of the both pads, check the sliding condition of the piston, lock pin sleeve and guide pin sleeve.**

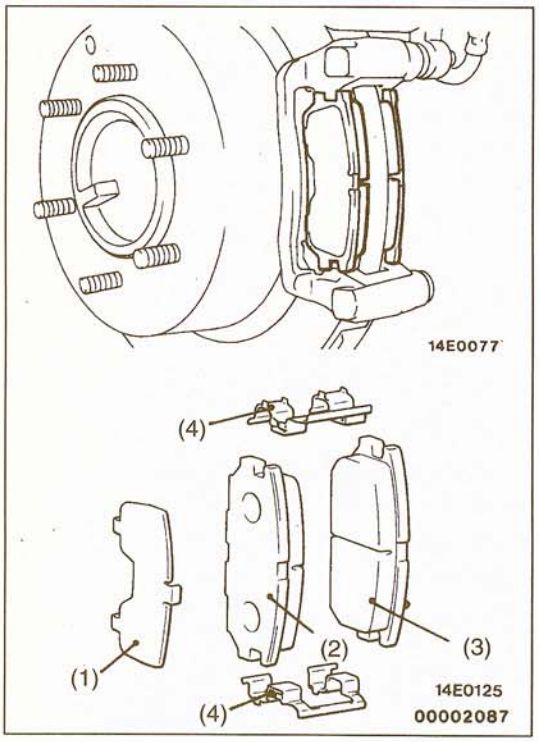


2. Remove lock pin. Lift caliper assembly and retain with wires.

   **Caution**
   **Do not wipe off the special grease that is on the lock pin or allow it to contaminate the lock pin.**

3. Remove the following parts from the caliper support.
   (1) Outer shim
   (2) Pad assembly
   (3) Pad and wear indicator assembly
   (4) Clip

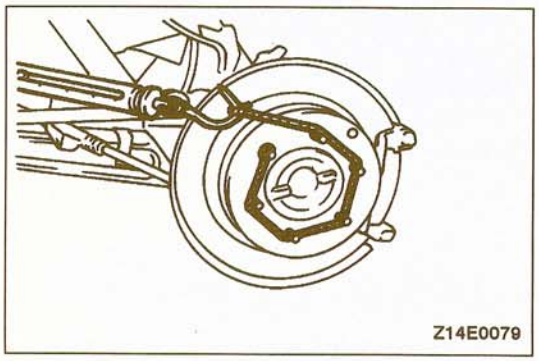


4. In order to measure the dragging force of the disc brakes after installation of the brake pads, use a spring balance to measure the rotational sliding resistance of the hub in the forward direction with the pads removed.

   NOTE
   To secure the disc to the hub, tighten the nuts.

5. Securely attach the pad clip to the caliper support.

   **Caution**
   **Do not deposit grease or other dirt on pad or brake disc friction surfaces.**

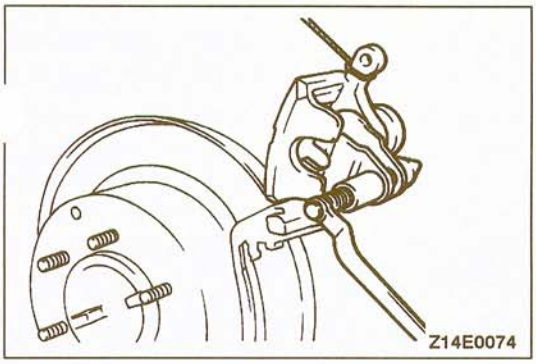
Z14E0074

6. Clean the piston and press the piston into the cylinder. Be careful that the piston boot does not become caught when lowering the caliper assembly and installing the lock pin.
7. Start the engine and, after strongly depressing the brake pedal 2-3 times, stop the engine.
8. Turn the brake disc forward 10 times.

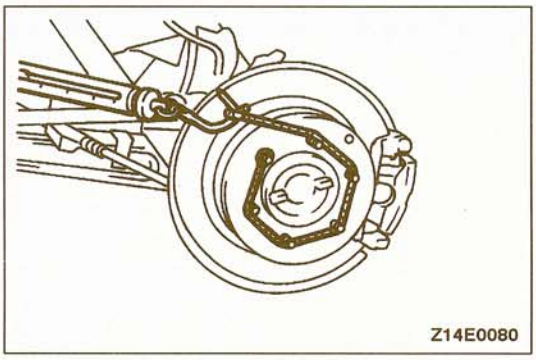
Z14E0080

9. Use a spring balance to measure the rotational sliding resistance of the hub in the forward direction.
10. Calculate the dragging force of the disc brakes (the difference between the values measured in steps (9) and (4)).

    **Standard value: 57 N (13 lbs.) or less**

11. If the dragging force exceeds the standard value, disassemble piston and clean the piston. Check for corrosion or worn piston seal, and check the sliding condition of the lock pin sleeve and guide pin sleeve.

## REAR BRAKE DISC THICKNESS CHECK

35100200039

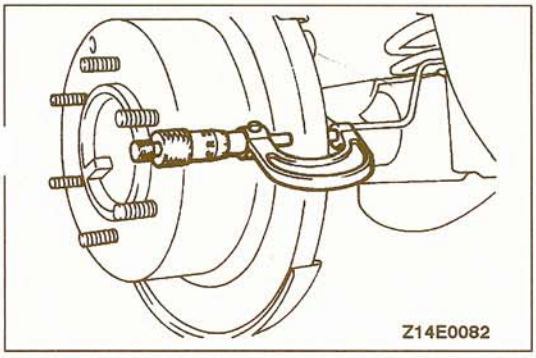
Z14E0082

1. Remove dirt and rust from the brake disc surface.
2. Measure the disc thickness at 4 locations or more.

   **Standard value: 18.0 mm (.71 in.)**

   **Limit: 16.4 mm (.646 in.)**

   Replace the discs and pad assembly for both left and right sides of the vehicle if they are worn beyond the specified limit.

## REAR BRAKE DISC RUNOUT CHECK 35100210032

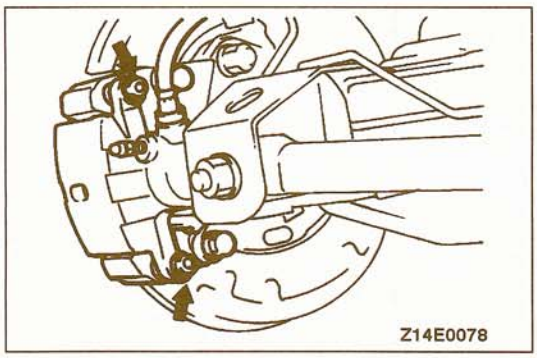
Z14E0078

1. Remove the caliper support, raise the caliper assembly, and secure it by using a wire, etc.

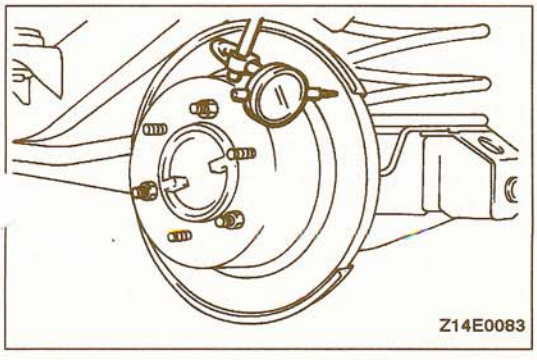
Z14E0083

2. Place a dial gage approximately 5 mm (.2 in.) from the outer circumference of the brake disc, and measure the runout of the disc.

   **Limit: 0.08 mm (.0031 in.)**

   NOTE
   To secure the disc to the hub, tighten the nuts.

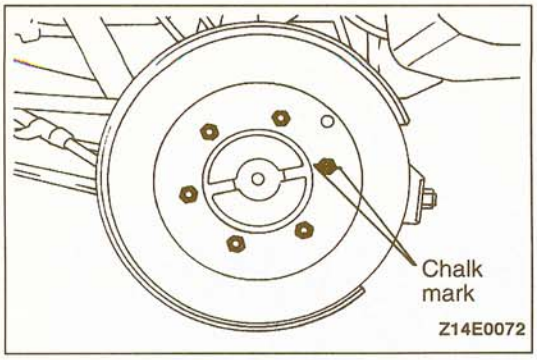


## REAR BRAKE DISC RUNOUT CORRECTION

35100220035

1. If the runout of the brake disc is equivalent to or exceed the limit specification, change the phase of the disc and axle shaft and then measure the runout again.
   (1) Before removing the brake disc, chalk both sides of the wheel stud on the side at which runout is greatest.

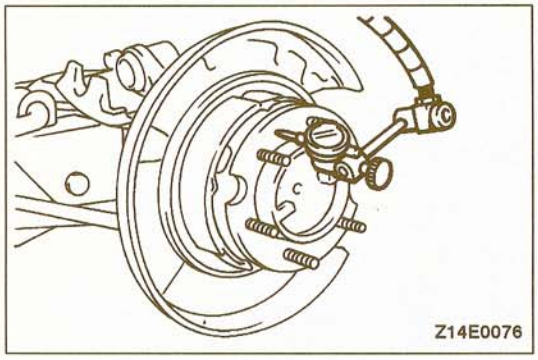


   (2) Remove the brake disc, connect a dial gage, and then move the hub in the axial direction and measure the play.

   **Limit: 0.25 mm (.0098 in.) or less**

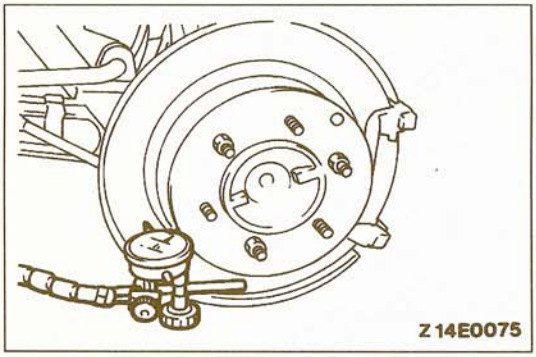


   (3) If the play does not exceed the limit specification, install the brake disc at a different phase, and then check the runout of the brake disc again.
2. If the runout cannot be corrected by changing the phase of the brake disc, replace the disc.

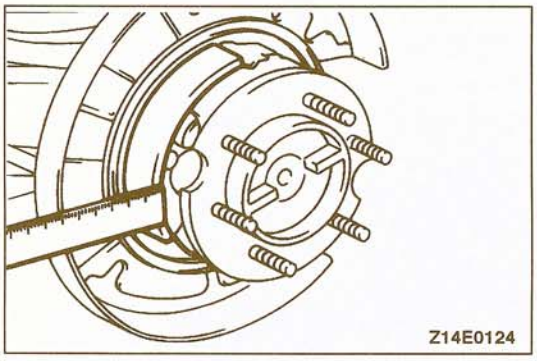


## BRAKE LINING THICKNESS CHECK

35100300067

1. Remove the rear brake assembly and secure it with wire.
2. Remove the brake drum.
3. Measure the wear of the brake lining at the place worn the most.

   **Standard value: 6.5 mm (.256 in.)**

   **Limit: 4.5 mm (.177 in.)**

   Replace the shoe and lining assembly if brake lining thickness is less than the limit if it is not worn evenly. For information concerning the procedures for installation of the shoe and lining assembly, refer to GROUP 36–Parking Brake Drum.

   **Caution**
   1. **Whenever the shoe and lining assembly is replaced, replace both R.H. and L.H. assemblies as a set to prevent the vehicle from pulling to one side when braking.**
   2. **If there is a significant difference in the thicknesses of the shoe and lining assemblies on the left and right sides, check the sliding condition of the piston.**

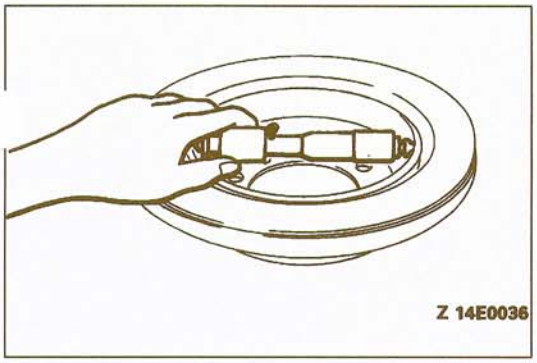


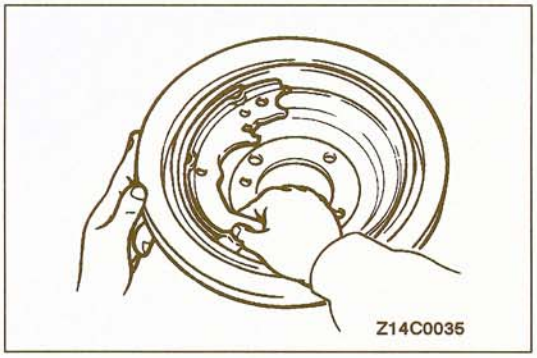


## BRAKE DRUM INSIDE DIAMETER CHECK

35100320056

1. Remove the rear brake assembly and secure it with wire.
2. Remove the brake drum.
3. Measure the inside diameter of the brake drum at two or more locations.

   **Standard value: 197 mm (7.756 in.)**

   **Limit: 198 mm (7.795 in.)**
4. Replace brake drums and shoe and lining assembly when wear exceeds the limit value or is badly imbalanced.

## BRAKE LINING AND BRAKE DRUM CONTACT CHECK

35100310060

1. Remove the rear brake assembly and secure it with wire.
2. Remove the brake drum.
3. Remove the shoe and lining assembly, refer to GROUP 36 – Parking Brake Drum.
4. Chalk the inner surface of the brake drum and rub against the shoe and lining assembly.
5. Replace the shoe and lining assembly or the brake drums if there is a very irregular contact area.
6. For information concerning the procedures for installation of the shoe and lining assembly, refer to GROUP 36 – Parking Brake Drum.

   NOTE
   Wipe off chalk after check.

# BRAKE PEDAL

35100340083

## REMOVAL AND INSTALLATION

**Post-installation Operation**
- Brake Pedal Adjustment (Refer to P.35A-6.)
- Shift Lock Cable Adjustment (Refer to GROUP 23A – Transmission Control)

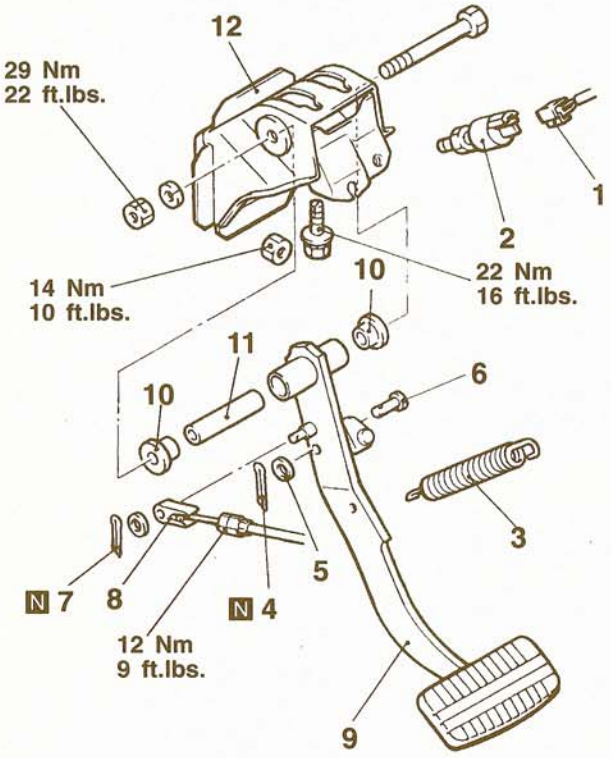


14E0161
00002088

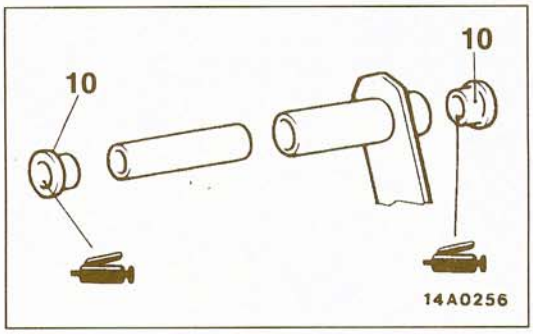


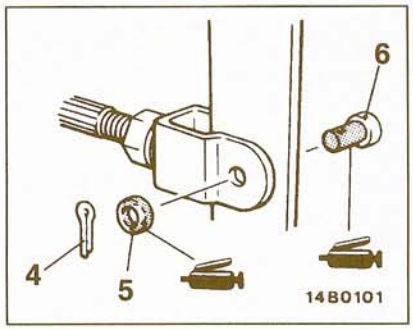


**Stop light switch removal steps**
1. Stop light switch connector
2. Stop light switch

**Pedal support member removal steps**
2. Stop light switch
9. Brake pedal
12. Pedal support member

**Brake pedal removal steps**
3. Return spring
4. Cotter pin
5. Washer
6. Clevis pin
7. Cotter pin
8. Shift lock cable connection
9. Brake pedal
10. Bushing
11. Spacer
12. Pedal support member

**TSB Revision**

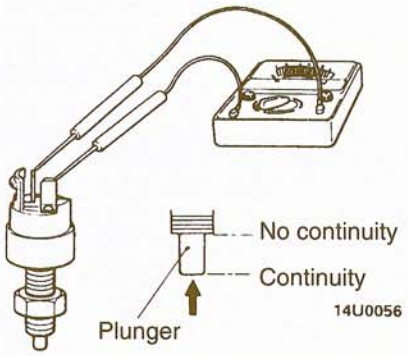


14U0056

<Vehicles with cruise control system>




14L0170
00002089

## INSPECTION

35100350031

- Check the bushing for wear.
- Check the brake pedal for bend or twisting.
- Check the brake pedal return spring for damage.

### STOP LIGHT SWITCH

35100890052

The stop light switch is in good condition if there is no continuity when the plunger is pressed in, and if there is continuity when the plunger is released outward.
For models equipped with cruise control system, check for continuity at stop light switch connectors A and B.

# MASTER CYLINDER AND BRAKE BOOSTER

35100370075

## REMOVAL AND INSTALLATION

**Pre-removal Operation**
- Brake Fluid Draining

**Post-installation Operation**
- Brake Fluid Supplying
- Bleeding (Vehicles without A.B.S: Refer to P.35A-9.)(Vehicles with A.B.S: Refer to 35C – On-vehicle Service.)
- Brake Pedal Adjustment (Refer to P.35A-6.)

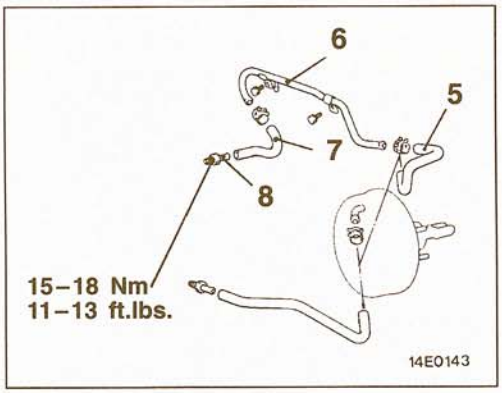


**Brake pipe flare nut**

15 Nm
11 ft.lbs.




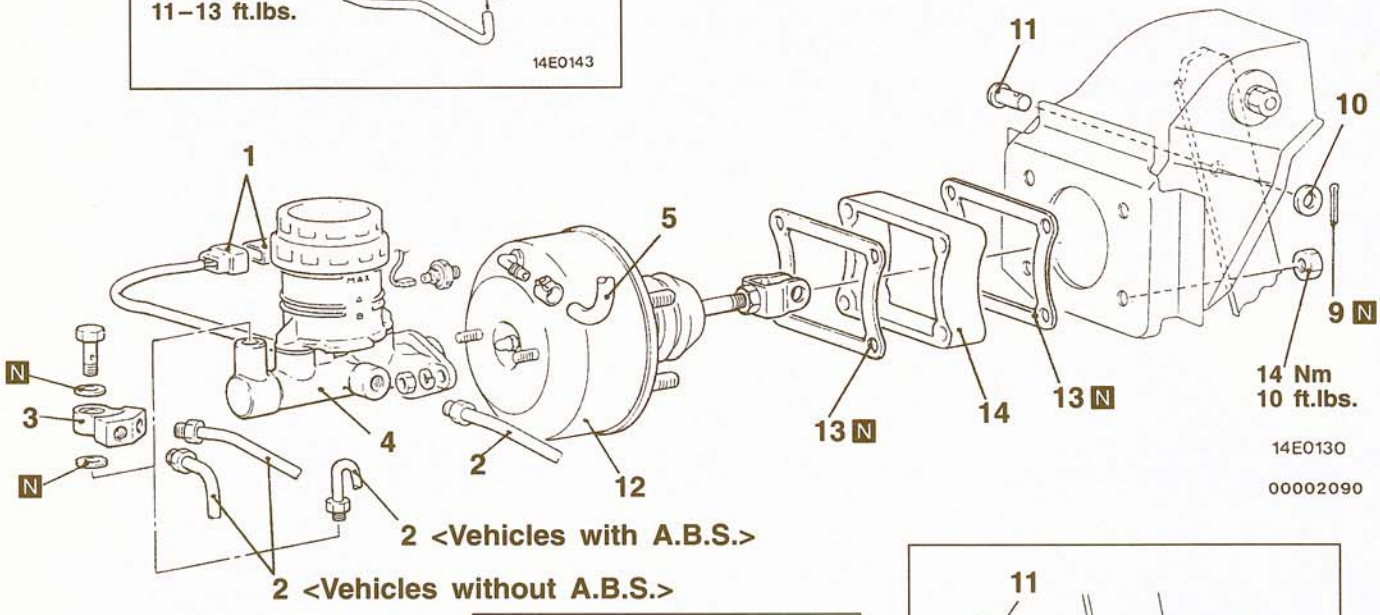


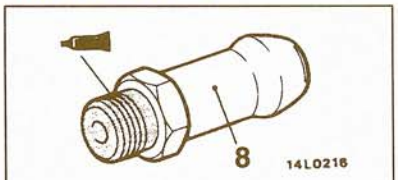


**Sealant:**
**3M ATD Part No. 8663, 8661 or equivalent**

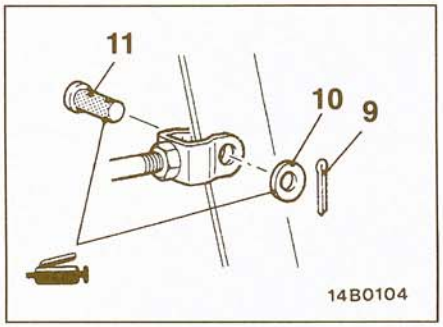


**Master cylinder removal steps**

1. Brake fluid level sensor connector
2. Brake pipe
3. Connector <Vehicles without ABS>
4. Master cylinder

▶B◀ • Clearance check and adjustment between primary piston and push rod

**Brake booster removal steps**

4. Master cylinder

◀A▶ ▶A◀ 5. Vacuum hose (with built-in check valve)

▶A◀ 6. Vacuum pipe

▶A◀ 7. Vacuum hose

8. Fitting
9. Cotter pin
10. Washer
11. Clevis pin
12. Brake booster
13. Spacer
14. Sealant

**TSB Revision**

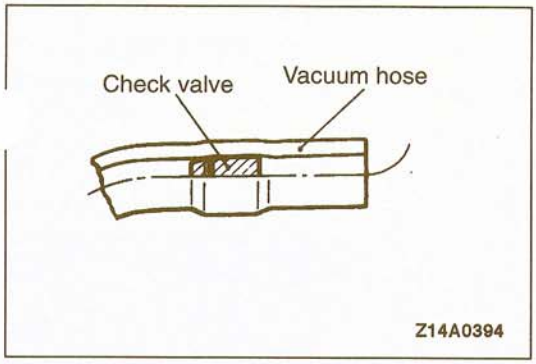


## REMOVAL SERVICE POINT

### ◀A▶ VACUUM HOSES WITH CHECK VALVE REMOVAL

NOTE
Since the check valve is fitted to the vacuum hose, replace the check valve as an assembly unit together with the vacuum hose if there is a malfunction of the check valve.

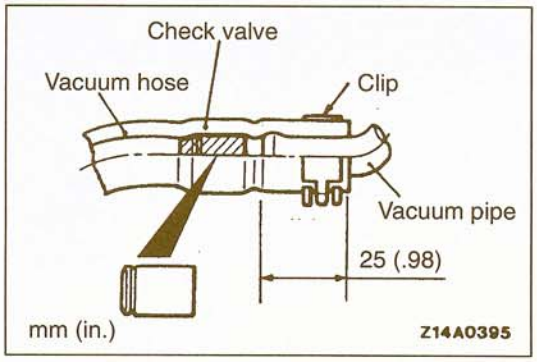


## INSTALLATION SERVICE POINTS

### ▶A◀ VACUUM HOSE/VACUUM PIPE/VACUUM HOSE WITH CHECK VALVE INSTALLATION

(1) The vacuum hose at the engine should be securely connected until it contacts the hexagonal edge of the fitting, and then should be secured by the hose clip.
(2) Attach the vacuum hose so that it may be inserted to the dimension shown in the illustration.

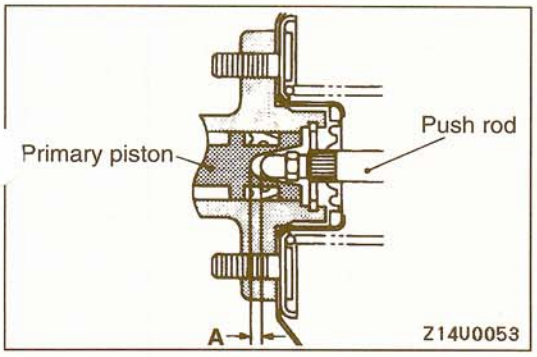


### ▶B◀ CLEARANCE BETWEEN BRAKE BOOSTER PUSH ROD AND PRIMARY PISTON ADJUSTMENT

Adjust the clearance (A) between the brake booster push rod and primary piston as follows:

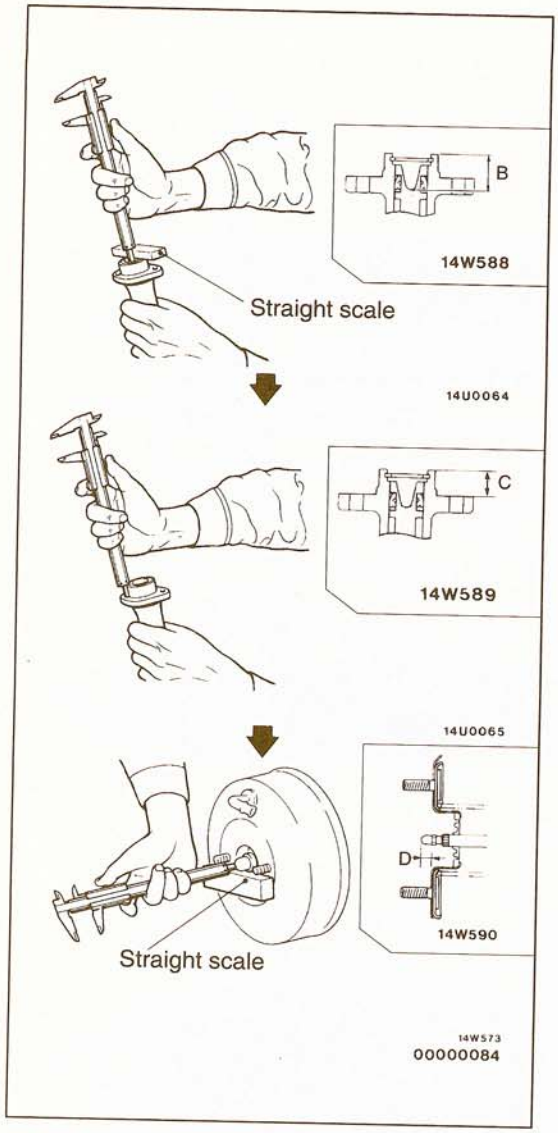


Calculate clearance A form measurements B, C and D.

A=B–C–D

**Standard value: 0.65–0.90 mm (.026–.035 in.)**

NOTE
When brake booster negative pressure (–93.3 kPa [700 mmHg, 27.6 in.Hg] is applied, clearance value will become 0.05–0.30 mm (.0020–.012 in.).

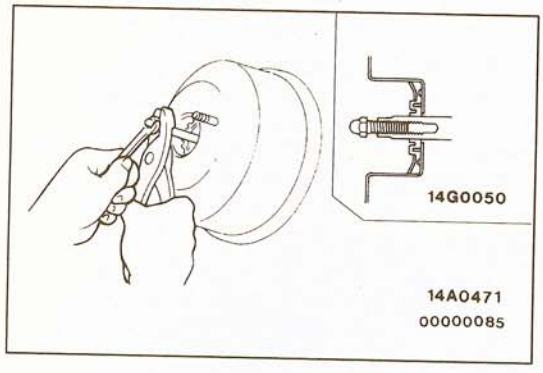


If the clearance is not within the standard value range, adjust by changing the push rod length by turning the screw of the push rod.

## MASTER CYLINDER
## DISASSEMBLY AND REASSEMBLY

35100420060

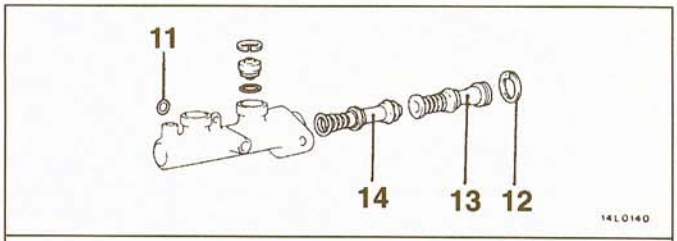


Master cylinder kit

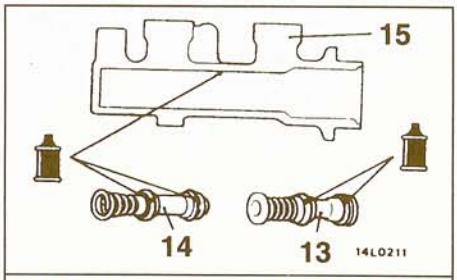


Brake fluid: DOT3 or DOT4




**Disassembly steps**

1. Reservoir cap assembly
2. Diaphragm
3. Reservoir cap
4. Filter <Vehicles with ABS>
5. Brake fluid level sensor
6. Float
7. Reservoir stopper bolt
8. Reservoir tank
9. Reservoir seal

◀A▶ 10. Piston stopper bolt

11. Gasket

◀B▶ 12. Stopper ring

13. Primary piston assembly
14. Secondary piston assembly
15. Master cylinder body

**Caution**
**Do not disassemble the secondary and primary piston assembly.**

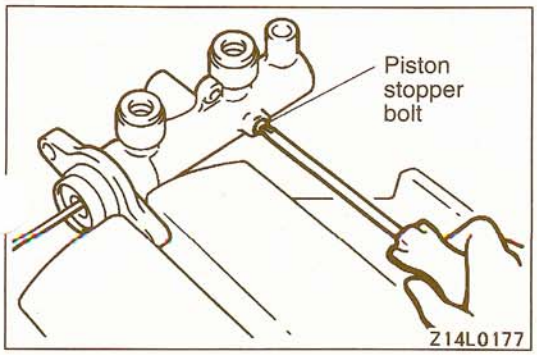


## DISASSEMBLY SERVICE POINTS

### ◀A▶ PISTON STOPPER BOLT REMOVAL

Remove the piston stopper bolt, while depressing the piston.

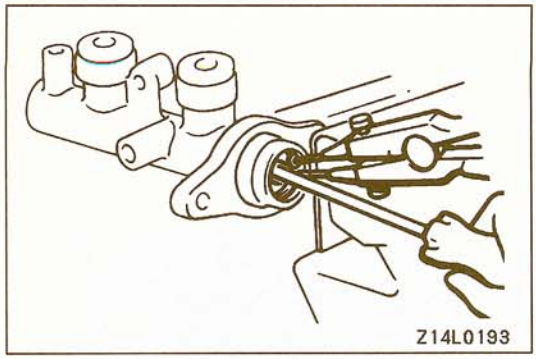


**◀B▶ STOPPER RING REMOVAL**

Remove the piston stopper ring, while depressing the piston.

# BRAKE LINE

35100510019

## REMOVAL AND INSTALLATION

**Pre-removal Operation**
- Brake Fluid Draining

**Post-installation Operation**
- Brake Fluid Supplying
- Bleeding (Refer to P.35A-9.)

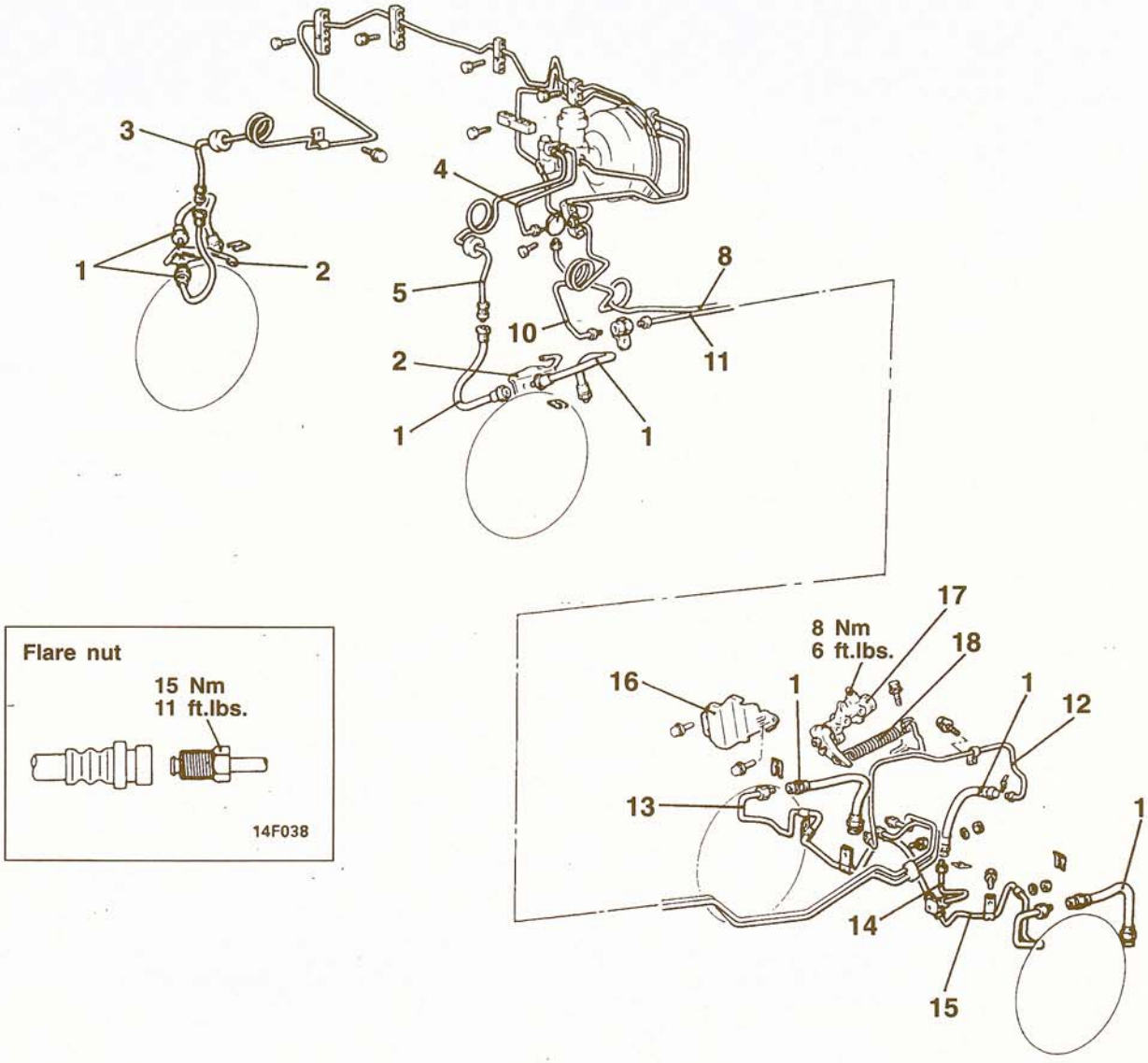





1. Brake hose
2. Brake hose support
3. Brake pipe (front, R.H.)
4. Brake pipe (front, R.H. 1)
5. Brake pipe (front, L.H.)
8. Brake pipe (floor)
10. Brake pipe (main 1)
11. Brake pipe (main 2)
12. Brake pipe (main 3)
13. Brake pipe (rear, R.H.)
14. Brake pipe (rear, center)
15. Brake pipe (rear, L.H.)
16. Protector
17. Load sending proportioning valve
18. Load sending spring

**Caution**
**Do not disassemble the load sending proportioning valve because its performance depends on the load of the spring.**

**TSB Revision**

# FRONT DISC BRAKE

35100600068

## REMOVAL AND INSTALLATION

**Pre-Removal Operation**
- Brake Fluid Draining

**Post-installation Operation**
- Brake Fluid Supplying
- Bleeding (Vehicles without A.B.S.: Refer to P.35A-9.)(Vehicles with A.B.S.: Refer to GROUP 35C – On-vehicle Service.)

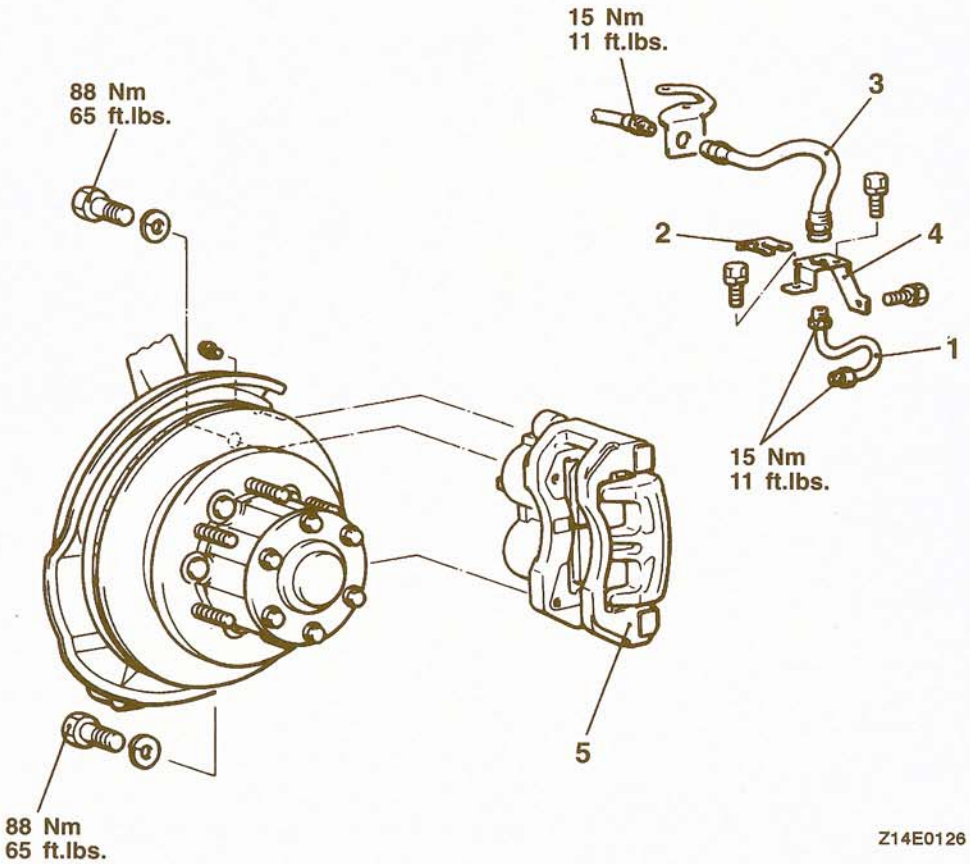


**Removal steps**

1. Brake pipe
2. Clip
3. Brake hose
4. Brake hose bracket
- ▶A◀ 5. Front brake assembly

TSB Revision

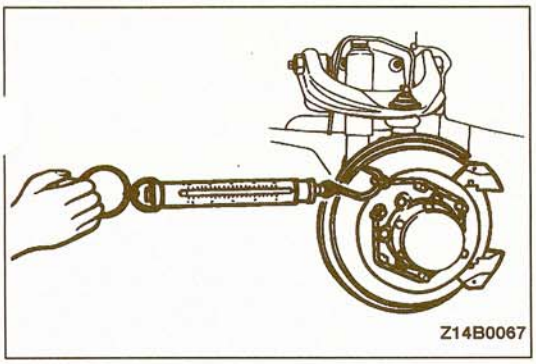


## INSTALLATION SERVICE POINTS

### ▶A◀ FRONT BRAKE ASSEMBLY INSTALLATION

After installation of the brake assembly, measure the dragging force of the disc brakes by the following procedure.

(1) With the brake assembly removed, use a spring balance to measure the rotational sliding resistance of the hub in the forward direction.

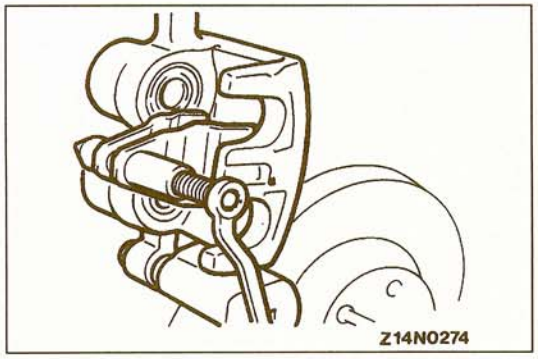


(2) After installing the caliper support to the knuckle, use a piston expander to expand the piston, and then install the caliper body.

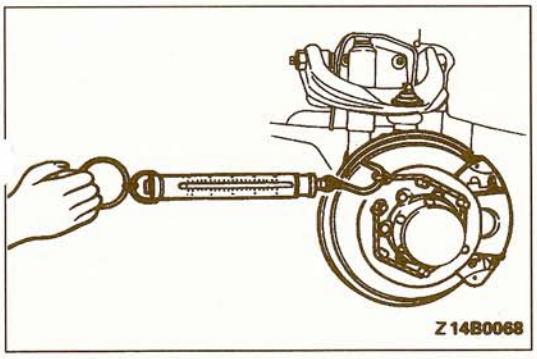


(3) Start the engine and, after strongly depressing the brake pedal 2-3 times, stop the engine.
(4) Turn the brake disc forward 10 times.
(5) Use a spring balance to measure the rotational sliding resistance of the hub in the forward direction.
(6) Calculate the dragging force of the disc brakes [the difference between the values measured in steps (5) and (1)].

**Standard value: 57 N (13 lbs.) or less**

(7) If the dragging force exceeds the standard value, disassemble piston and clean the piston. Check for corrosion or worn piston seal.

## DISASSEMBLY AND REASSEMBLY

35100620064

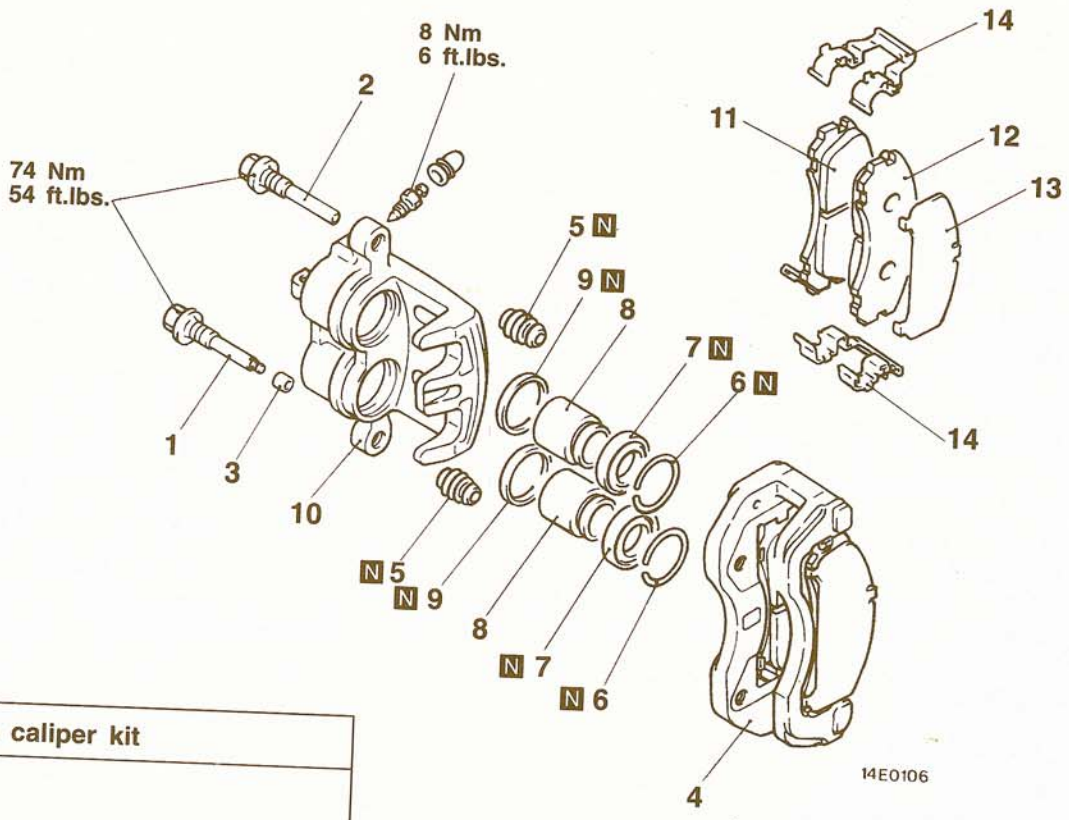


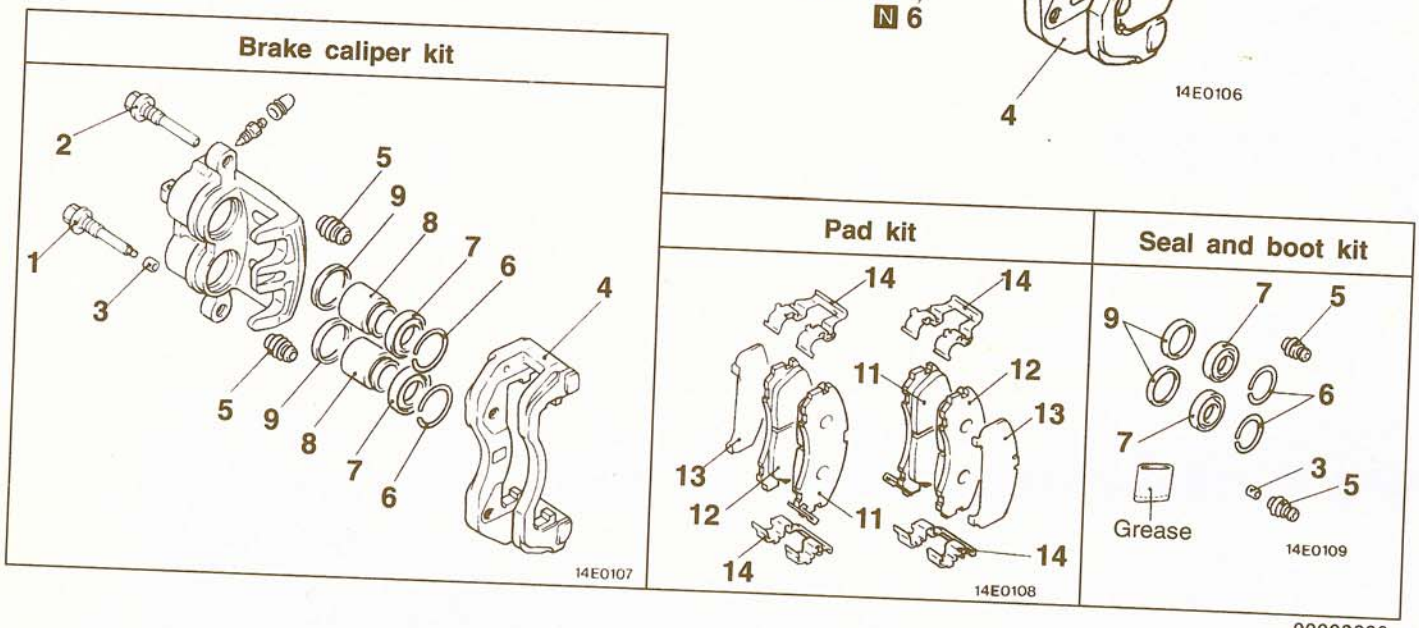


00002093

**Caliper assembly disassembly steps**

- ▶A◀ 1. Lock pin
- ▶A◀ 2. Guide pin
- 3. Bushing
- 4. Caliper support (Pad, clip and shim)
- 5. Pin boot
- 6. Boot ring
- 7. Piston boot
- ◀A▶ 8. Piston
- ◀A▶ 9. Piston seal
- ◀B▶ 10. Caliper body

**Pad assembly disassembly steps**

- ▶A◀ 1. Lock pin
- ▶A◀ 2. Guide pin
- 3. Bushing
- 4. Caliper support (Pad, clip and shim)
- 11. Pad and wear indicator assembly
- 12. Pad assembly
- 13. Outer shim
- 14. Clip

## LUBRICATION POINTS

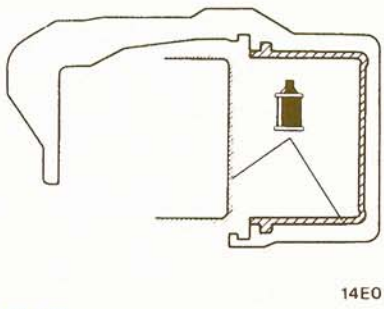

14E0131

**Caution**
**Special grease has been applied to the inside of the seal and boot kit, so this grease should not be wiped off.**

**Brake fluid: DOT3 or DOT4**

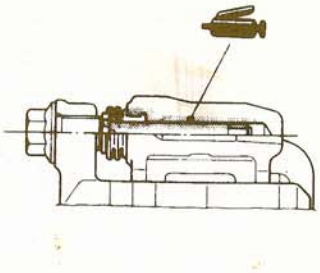

14A0541

**Grease: Repair kit grease (orange)**

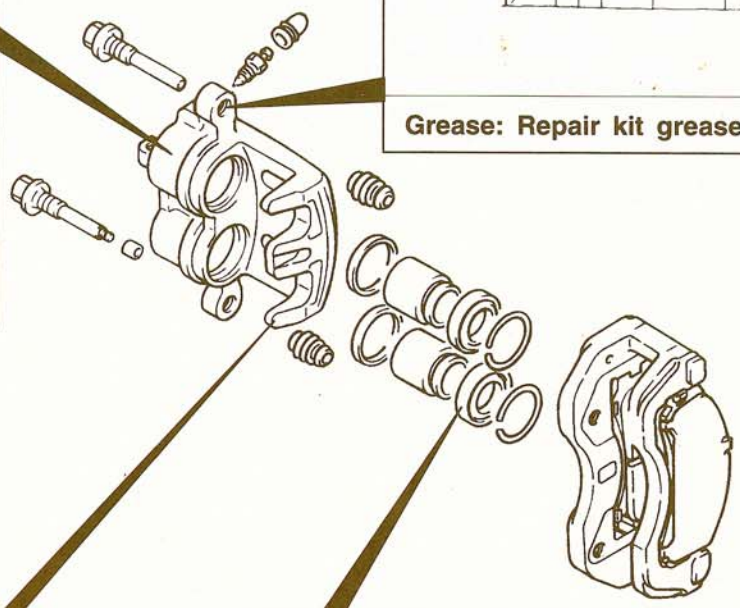

14E0106

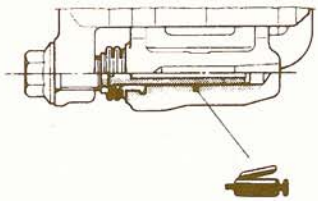

14A0541

**Grease:**
**Repair kit grease (orange)**

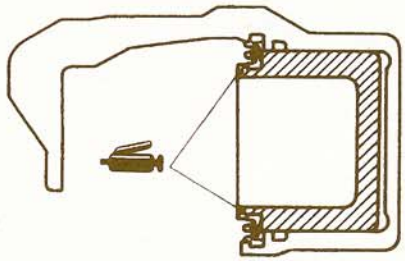

14L0128

**Grease: repair kit grease (orange)**

00002251

TSB Revision

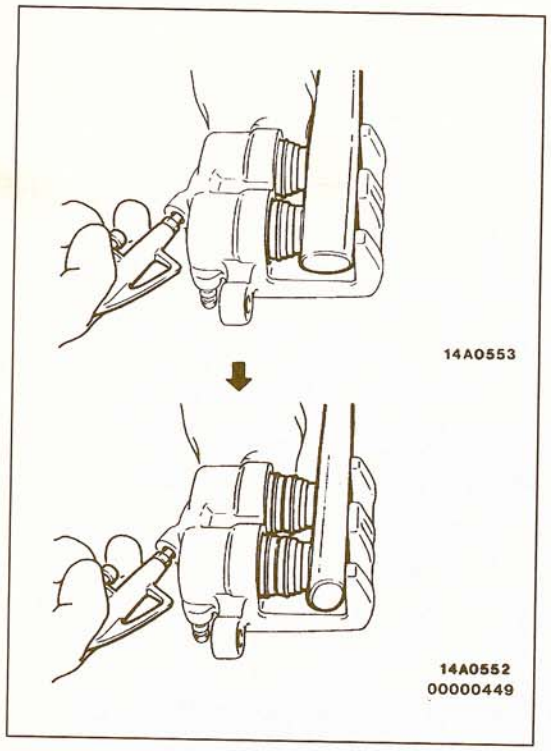


## DISASSEMBLY SERVICE POINTS

### ◀A▶ PISTON BOOT/PISTON REMOVAL

Pump in compressed air through the brake hose installatio hole and remove the pistons and piston boot.

**Caution**
**When removing the pistons, be sure to use the handle of a plastic hammer and adjust the height of the two pistons while pumping in air slowly in so that the pistons protrude evenly.**
**Do not remove one piston completely before trying to remove the other piston because it will become impossible to remove the second piston.**

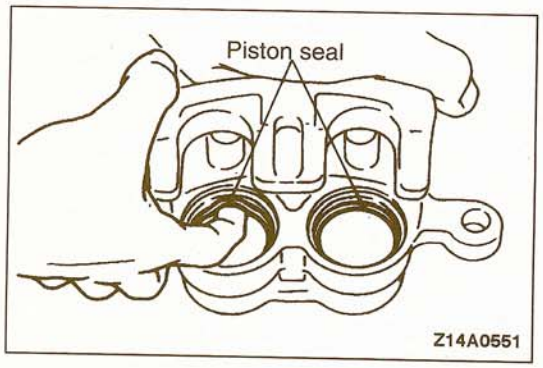


### ◀B▶ PISTON SEAL REMOVAL

(1) Remove piston seal with finger tip.

**Caution**
**Do not use a screwdriver or other tools in order to prevent damage to the inner cylinder.**

(2) Clean the piston surface and the inner cylinder with trichloroethylene, alcohol or specified brake fluid.

**Specified brake fluid: DOT 3 or DOT 4**

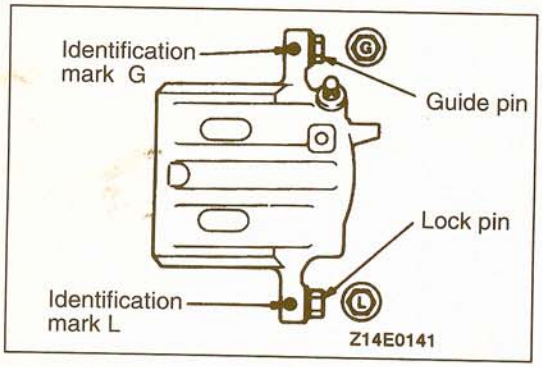


## INSTALLATION SERVICE POINT

### ▶A◀ GUIDE PIN/LOCK PIN NSTALLATION

Install the guide pin and lock pin as shown in the illustration so that each head mark of the guide pin and the lock pin matches the indication mark (G or L) located on the caliper body.

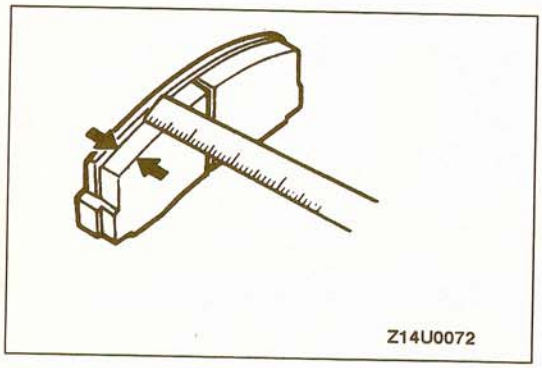


## INSPECTION

35100630043

### PAD WEAR

Measure the thickness at the thinnest and worn area of the pad.
Replace the pad assembly when the pad thickness is less than the limit value.

**Standard value: 10.0 mm (.39 in.)**

**Limit: 2.0 mm (.079 in.)**

**Caution**
1. **If the limit is exceeded, replace the pads at both sides and also replace the brake pads for the wheels o the opposite side at the same time.**
2. **If there is a significant difference in the thicknesses of the pads on the left and right sides, check the sliding parts.**

# REAR DISC BRAKE

35100700041

## REMOVAL AND INSTALLATION

**Pre-removal Operation**
- Brake Fluid Draining

**Post-installation Operation**
- Brake Fluid Supplying
- Bleeding (Vehicles without A.B.S.: Refer to P.35A-9.)(Vehicles with A.B.S: Refer to GROUP 35C – On-vehicles Service.)

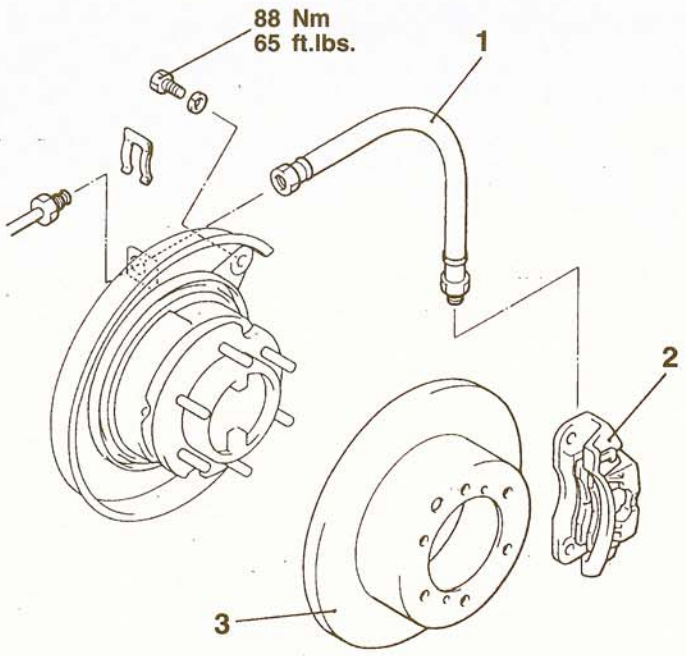


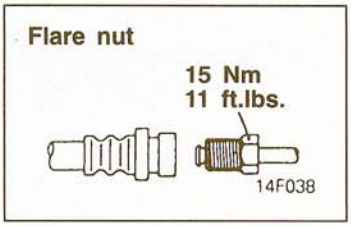


00002252

**Removal steps**

1. Brake hose connection
▶A◀ 2. Rear brake assembly
3. Brake disc

## INSTALLATION SERVICE POINT

### ▶A◀ REAR BRAKE ASSEMBLY INSTALLATION

Install the rear brake assembly by the same procedure as that for the front brake assembly. (Refer to P.35A-27.)

## INSPECTION

35100710020

### BRAKE DISC

- Check the disc for wear. (Refer to P.35A-15.)
- Check the disc for runout. (Refer to P.35A-15.)
- Check the disc for damage.

## DISASSEMBLY AND REASSEMBLY

35100720030

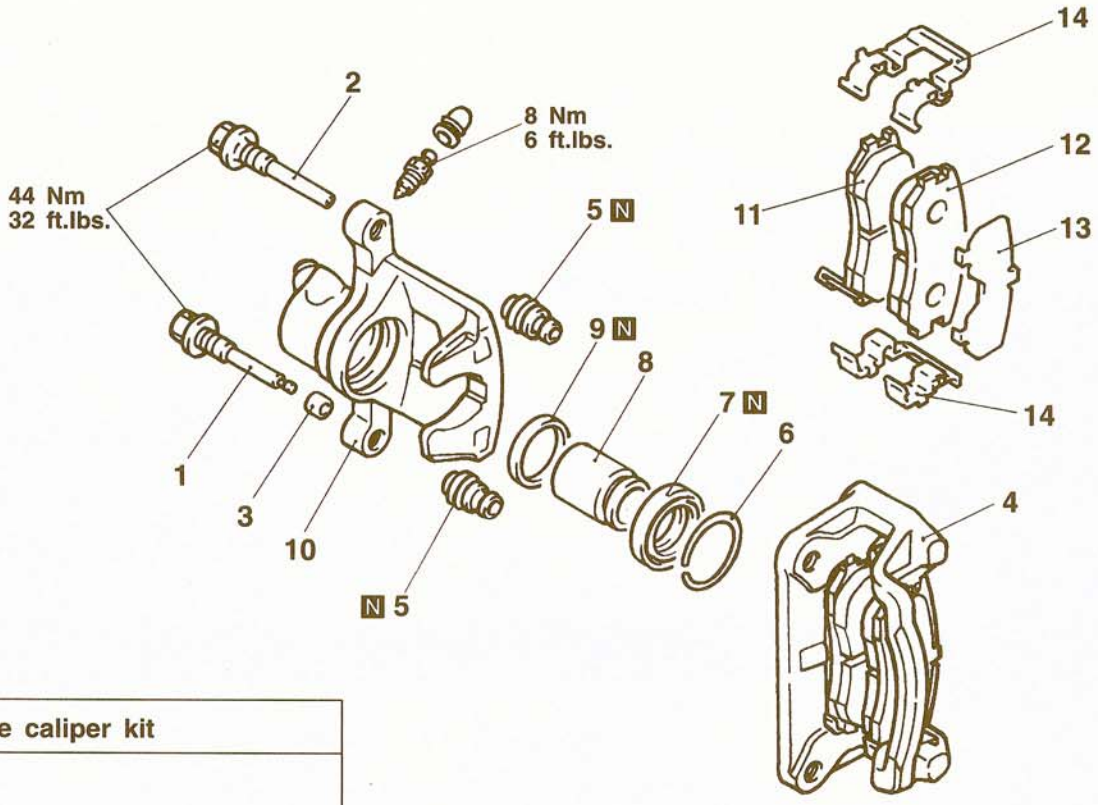


14E0110

**Brake caliper kit**

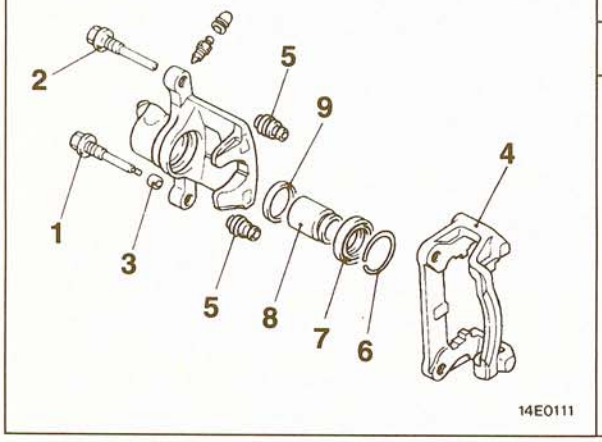


14E0111

**Pad kit**

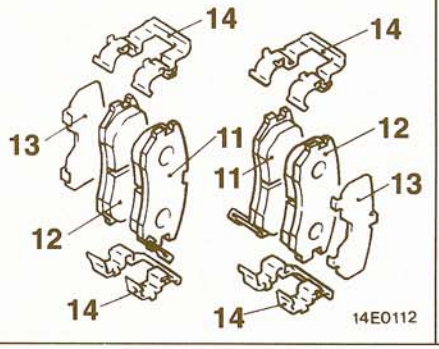


14E0112

**Seal and boot kit**

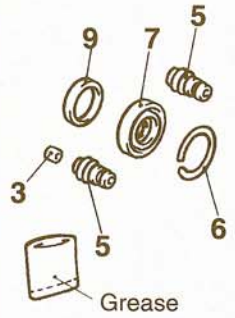


14E0113

00002253

**Caliper assembly disassembly steps**

- ▶A◀ ▶A◀ 1. Lock pin
- ▶A◀ ▶A◀ 2. Guide pin
- 3. Bushing
- 4. Caliper support (Pad, clip and shim)
- 5. Pin boot
- 6. Boot ring
- ◀A▶ 7. Piston boot
- ◀A▶ 8. Piston
- ◀B▶ 9. Piston seal
- 10. Caliper body

**Pad assembly disassembly steps**

- ▶A◀ ▶A◀ 1. Lock pin
- ▶A◀ ▶A◀ 2. Guide pin
- 3. Bushing
- 4. Caliper support (Pad, clip and shim)
- 11. Pad and wear indicator assembly
- 12. Pad assembly
- 13. Outer shim
- 14. Clip

**TSB Revision**

## LUBRICATION POINTS

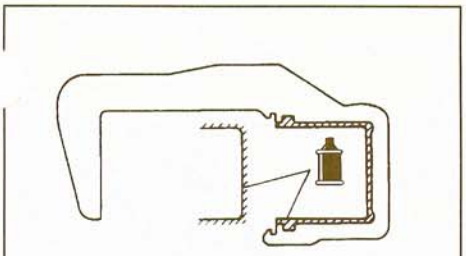

14E0121

**Caution**
**Special grease has been applied to the inside of the seal and boot kit, so this grease should not be wiped off.**

**Brake fluid: DOT3 or DOT4**

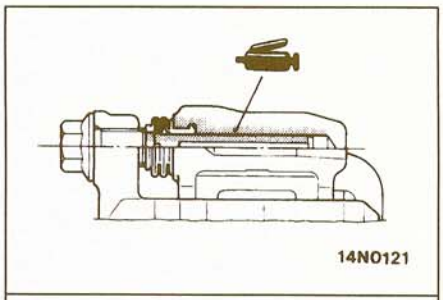

14N0121

**Grease:**
**Repair kit grease (orange)**

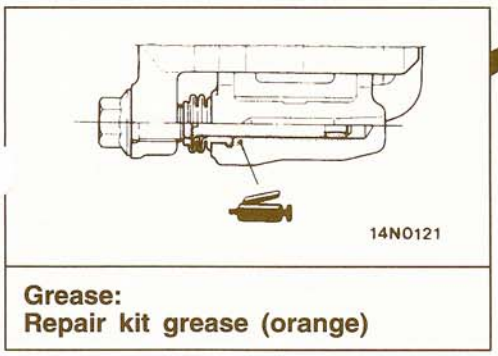

14N0121

**Grease:**
**Repair kit grease (orange)**

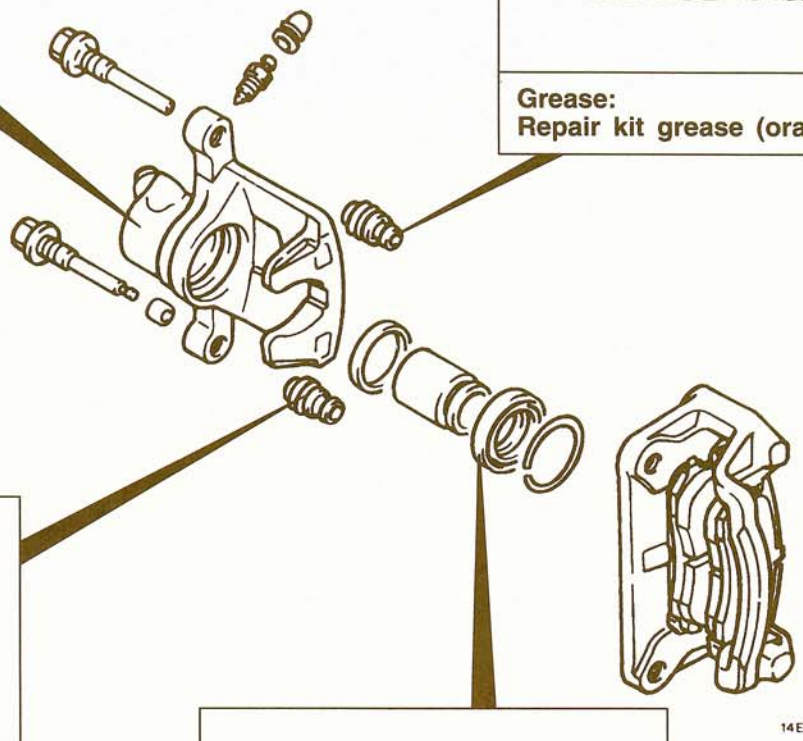

14E0110

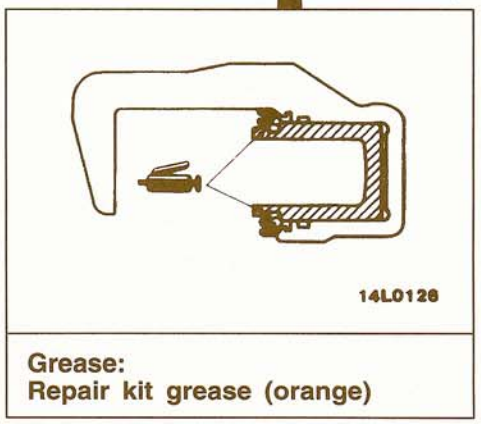

14L0126

**Grease:**
**Repair kit grease (orange)**

00002254

TSB Revision

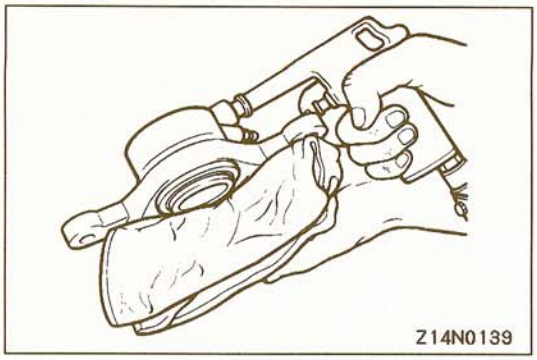
Z14N0139

## DISASSEMBLY SERVICE POINTS

### ◀A▶ PISTON BOOT/PISTON REMOVAL

Protect the caliper body with a cloth, and then blo compressed air through the brake hose to remove the pisto boot and the piston.

**Caution**
**Blow compressed air gently.**

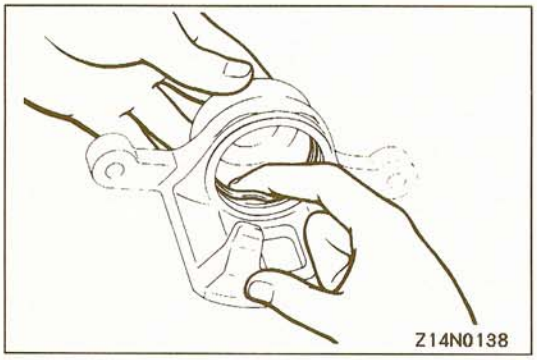
Z14N0138

### ◀B▶ PISTON SEAL REMOVAL

(1) Remove the piston seal with your finger tip.

**Caution**
**Do not use a flat-tipped screwdriver or other tool to prevent damage to inner cylinder.**

(2) Clean the piston surface and the inner cylinder with trichloroethylene, alcohol or specified brake fluid.

**Specified brake fluid: DOT 3 or DOT 4**

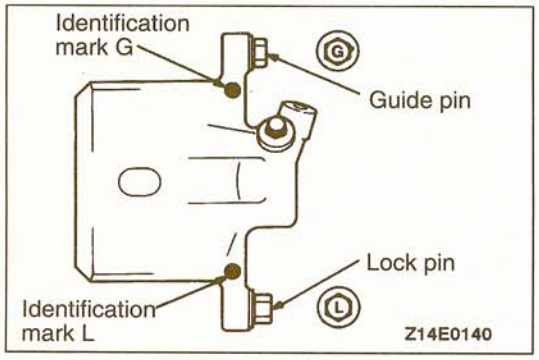

Z14E0140

## REASSEMBLY SERVICE POINT

### ▶A◀ GUIDE PIN/LOCK PIN INSTALLATION

Install the guide pin and lock pin as shown in the illustration so that each head mark of the guide pin and the lock pir matches the indication mark (G or L) located on the calipe body.

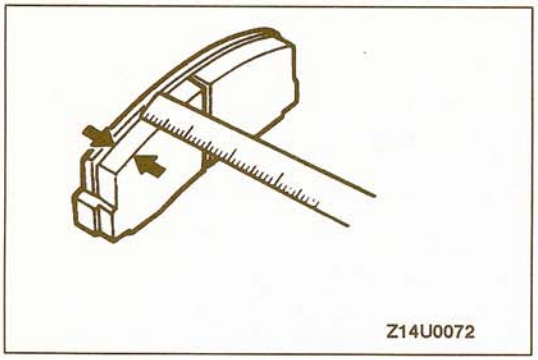
Z14U0072

## INSPECTION

35100730033

### PAD WEAR

Measure the thickness at the thinnest and worn area of the pad.
Replace pad assembly when pad thickness is less than the limit value.

**Standard value: 9.0 mm (.35 in.)**

**Limit: 2.0 mm (.079 in.)**

**Caution**
1. **If the limit is exceeded, replace the pads at both sides, and also replace the brake pads for the wheels on the opposite side at the same time.**
2. **If there is a significant difference in the thicknesses of the pads on the left and right sides, check the sliding parts.**

# ANTI-LOCK BRAKING SYSTEM (ABS) <AWD>

## CONTENTS

35209000060


**BRAKE LINE ..... 30**

**ELECTRONIC CONTROL UNIT ..... 36**

**GENERAL SPECIFICATIONS ..... 2**

**G-SENSOR ..... 32**

**HYDRAULIC UNIT ..... 31**

**ON-VEHICLE SERVICE ..... 24**

- ABS Relay Box Check ..... 29
- Bleeding ..... 24
- G-sensor Output Voltage Check ..... 29
- Hydraulic Unit Check ..... 26
- Motor Operation Check ..... 28
- Solenioid Valve Check ..... 28
- Wheel Speed Sensor Output Voltage Measurement ..... 25

**SERVICE SPECIFICATIONS ..... 2**

**SPECIAL TOOLS ..... 2**

**TROUBLESHOOTING ..... 3**

**WHEEL SPEED SENSOR ..... 33**


Refer to GROUP 35A for the following items.

**BRAKE LINE (BASIC BRAKE SYSTEM)**
**BRAKE PEDAL**
**FRONT DISC BRAKE**
**GENERAL SPECIFICATIONS**
**LUBRICANTS**
**MASTER CYLINDER AND BRAKE BOOSTER**
**ON-VEHICLE SERVICE**
- Brake Booster Operating Test
- Brake Drum Inside Diameter Check
- Brake Fluid Level Sensor Check
- Brake Lining and Brake Drum Contact Check
- Brake Lining Thickness Check
- Brake Pedal Inspection and Adjustment
- Check Valve Operation Check
- Disc Brake Pad Check
- Front Brake Disc Run-out Check
- Front Brake Disc Run-out Correction
- Front Brake Disc Thickness Check
- Front Disc Brake Pad Replacement and Brake Drag Check
- Front Disc Brake Rotor Inspection
- Load Sensing Proportioning Valve Function Test
- Load Sensing Spring Length Check and Adjustment
- Rear Brake Disc Run-out Check
- Rear Brake Disc Run-out Correction
- Rear Brake Disc Thickness Check
- Rear Disc Brake Pad Check and Replacement

**REAR DISC BRAKE**
**SEALANTS**
**SERVICE SPECIFICATIONS**
**TROUBLESHOOTING**

## GENERAL SPECIFICATIONS

35200020010

| Items | | Specifications |
|---|---|---|
| Rotor teeth | Front | 47 |
| | Rear | 47 |
| Speed sensor type | | Magnet coil type |

## SERVICE SPECIFICATIONS

35200030068

| Items | | Standard value |
|---|---|---|
| Hydraulic unit solenoid valve internal resistance Ω | OUT | 4.7 ± 0.25 |
| | IN | 9.0 ± 0.5 |
| Speed sensor's internal resistance kΩ | Front | 1.4 – 1.8 |
| | Rear | 1.3 – 1.5 |
| Speed sensor insulation resistance kΩ | | 100 or more |
| Clearance between speed sensor pole piece and toothed rotor mm (in.) | | 0.2 – 1.0 (.008 – .039) |
| G sensor output voltage V | When G sensor is installed and vehicle is stationary | 2.5 ± 0.12 |
| | When G sensor is held with the arrow facing downwards | 3.4 – 3.6 |

## SPECIAL TOOLS

35200060067

| Tool | Tool number and name | Supersession | Application |
|---|---|---|---|
|  | MB991502<br>Scan tool (MUT-II) | – | For checking A.B.S. |
|  | ROM pack | – | For checking A.B.S. |
| 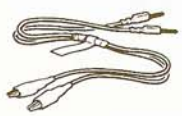 | MB991529<br>Diagnostic trouble code check harness | – | For checking A.B.S. when using a warning light |
| 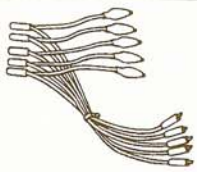 | MB991348<br>Test harness set | – | For checking of G-sensor |

**TSB Revision**

# TROUBLESHOOTING

35201110051

## DIAGNOSTIC TROUBLESHOOTING FLOW

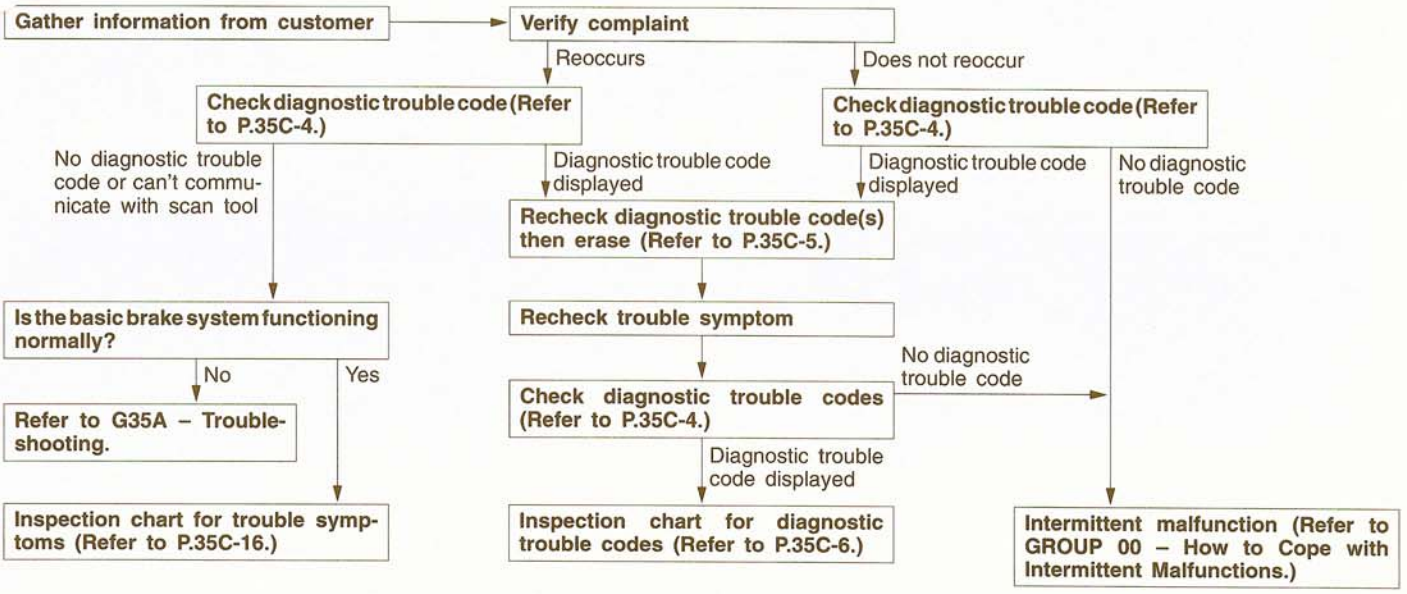


### NOTES WITH REGARD TO DIAGNOSIS

The condition listed in the following table are considered normal.

| Condition | Explanation of condition |
|---|---|
| System check sound | When starting the engine, a thudding sound can sometimes be heard coming from inside the engine compartment, but this is because the system operation check is being performed. This is considered normal. |
| ABS operation sound | 1. Sound of the motor inside the ABS hydraulic unit operating (whine)<br>2. Sound is generated along with vibration of the brake pedal. (scraping)<br>3. When ABS operates, sound is generated from the vehicle chassis due to repeated brake application and release.<br>(Thump: suspension; squeak: tires) |
| ABS operation<br>(Long braking distance) | For road surfaces such as snow-covered roads and gravel roads, the braking distance for vehicles with ABS can sometimes be longer than that for other vehicles. Accordingly, advise the customer to drive safely on such roads by lowering the vehicle speed and not being overconfident. |
| System check shock | When depressing the brake pedal slightly during driving at low speed, a shock can sometimes be generated, but this is because the system operation check (starting check that performed at vehicle speed of 8 km [5 mph]) is being performed. This is considered normal. |

Diagnosis detection condition depends on a diagnostic trouble code. So, when rechecking a trouble symptom, be sure to satisfy the condition listed in the "Comments" column of the inspection procedure for diagnostic trouble codes.

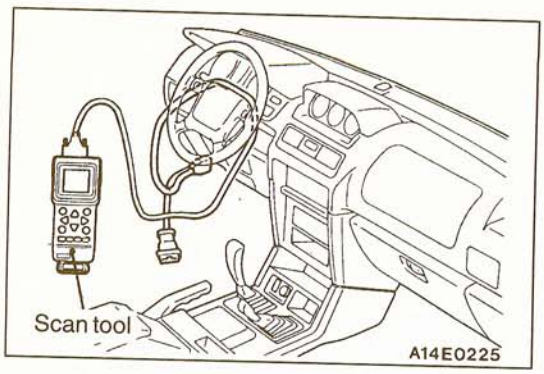


## DIAGNOSTIC FUNCTION

35201120047

### DIAGNOSTIC CODES CHECK

#### With the Scan Tool (MUT-II)

Connect the scan tool (MUT-II) to the diagnosis connector (16-pin), then check diagnostic codes.

**Caution**
**Turn the ignition switch off before connecting or disconnecting the scan tool.**

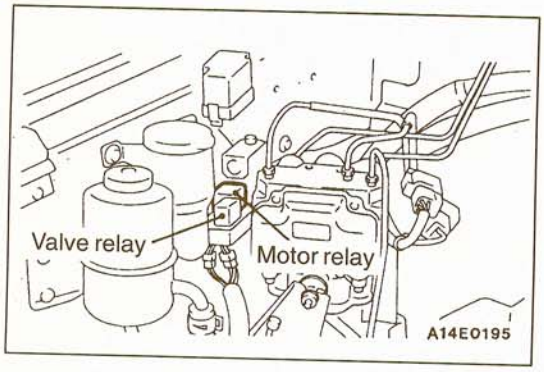


#### Without the Scan Tool (MUT-II)

1. Turn the ignition switch off and then remove the valve relay.

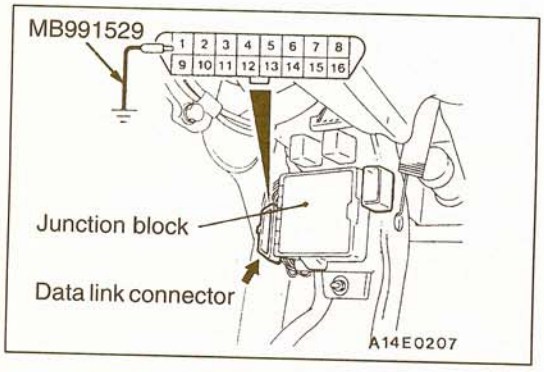


2. Use the special tool to ground data link connector terminal (1).
3. Turn the ignition switch to ON and then take a reading of the diagnostic trouble codes from the flashing of the ABS warning lamp.

   NOTE
   The diagnostic trouble code No. 51 (indicating an open or short circuit in the valve relay) will be always output although there is no open or short circuit. That is because the valve relay is removed.

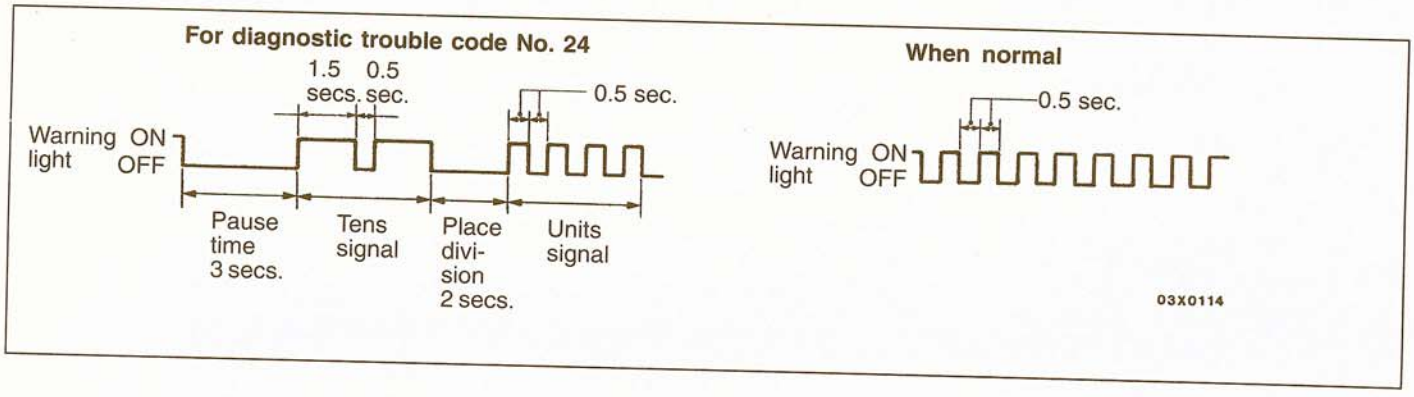


4. After remedying the problems indicated by the diagnostic trouble codes, disconnect the diagnostic trouble code check harness and install the valve relay. Then turn the ignition switch to ON again and check the ABS warning light. (Refer to P.35C-16plink=35201200017.) If an abnormality occurs during checking, a problem with the valve relay system may be present. (Refer P.35C-14plink=3520113005713.)

## ERASING DIAGNOSTIC CODES

### With the Scan Tool (MUT-II)

Connect the scan tool to the diagnosis connector (16-pin), then erase the diagnostic codes.

### Without the Scan Tool (MUT-II)

Removing the battery cable from the battery (–) terminal for 10 seconds or more, then reconnect the cable.

## INSPECTION CHART FOR DIAGNOSTIC TROUBLE CODES

35201130057

Inspect according to the inspection chart that is appropriate for the malfunction code.

| Diagnosis code no. | Inspection item | Diagnosis content | Reference page |
|---|---|---|---|
| 11 | Front right wheel speed sensor | Open circuit | 35C-7 |
| 12 | Front left wheel speed sensor | | |
| 13 | Rear right wheel speed sensor | | |
| 14 | Rear left wheel speed sensor | | |
| 15 | Wheel speed sensor | Abnormal output signal | 35C-7 |
| 16 | Power supply system | | 35C-8 |
| 21 | Front right wheel speed sensor | Short circuit | 35C-9 |
| 22 | Front left wheel speed sensor | | |
| 23 | Rear right wheel speed sensor | | |
| 24 | Rear left wheel speed sensor | | |
| 25 | Free wheel engage switch | | 35C-9 |
| 26 | Center differential lock detection switch | | 35C-10 |
| 27 | Rear differential lock detection switch <Vehicles with rear differential lock> | | 35C-11 |
| | Rear differential lock detection switch <Vehicles without rear differential lock> | | 35C-11 |
| 32 | G-sensor system | | 35C-12 |
| 33 | Stop light switch system | | 35C-12 |
| 41 | Front right solenoid valve | | 35C-13 |
| 42 | Front left solenoid valve | | |
| 43 | Rear solenoid valve | | |
| 51 | Valve relay | | 35C-14 |
| 53 | Motor relay, motor | | 35C-15 |
| 63 | Replace the ABS-ECU | | – |
| 64 | Replace the ABS-ECU | | – |

TSB Revision 96 35-008

# INSPECTION PROCEDURE FOR DIAGNOSTIC TROUBLE CODES

| Code No.11, 12, 13, 14 Wheel speed sensor open circuit | Probable cause |
|---|---|
| [Comment]<br>A sensor is open-circuited in the positive or negative line. | • Malfunction of wheel speed sensor<br>• Malfunction of wiring harness or connector<br>• Malfunction of ABS-ECU |

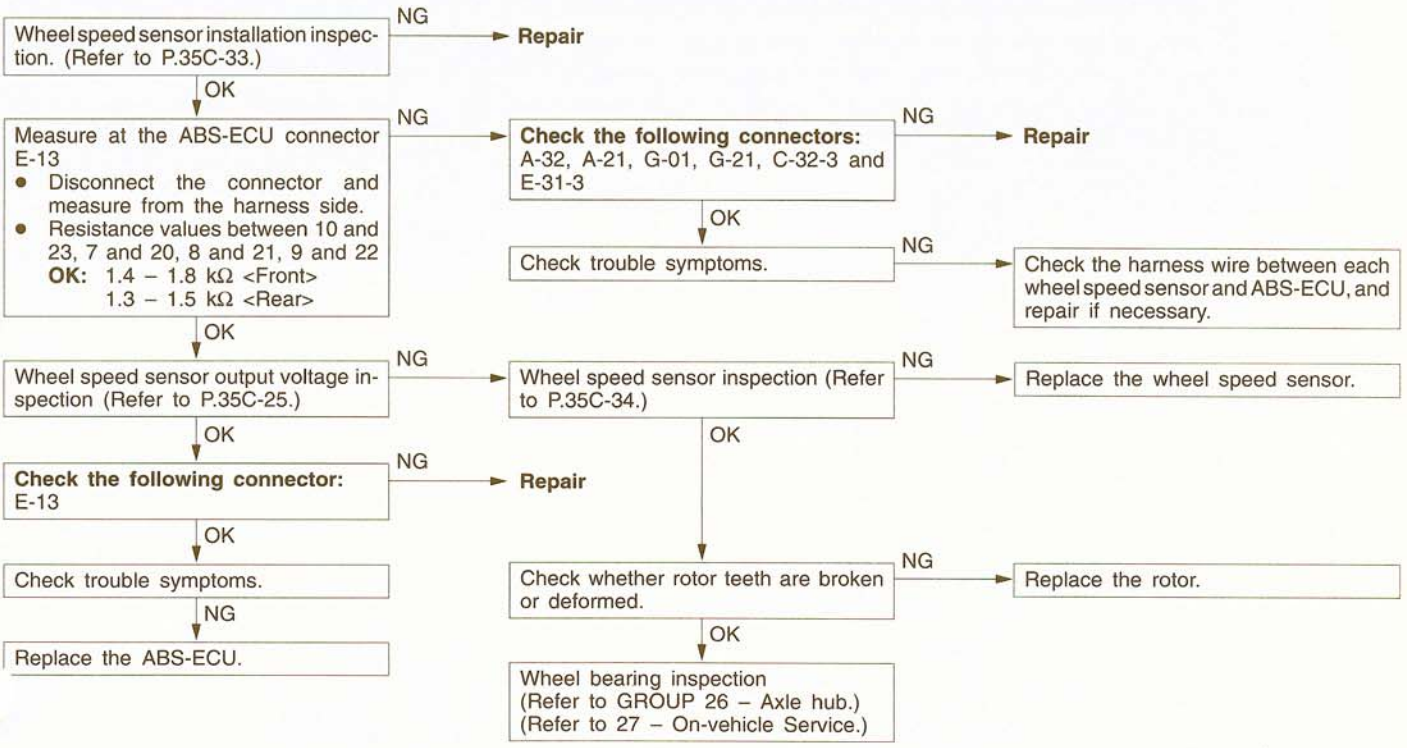


| Code No.15 Wheel speed sensor (Defective output signal) | Probable cause |
|---|---|
| [Comment]<br>A malfunction (other than an open or short-circuit) is detected in the output signal from a wheel speed sensor while driving. | • Improper installation of wheel speed sensor<br>• Malfunction of wheel speed sensor<br>• Malfunction of rotor<br>• Malfunction of wheel bearing<br>• Malfunction of wiring harness or connector<br>• Malfunction of ABS-ECU |

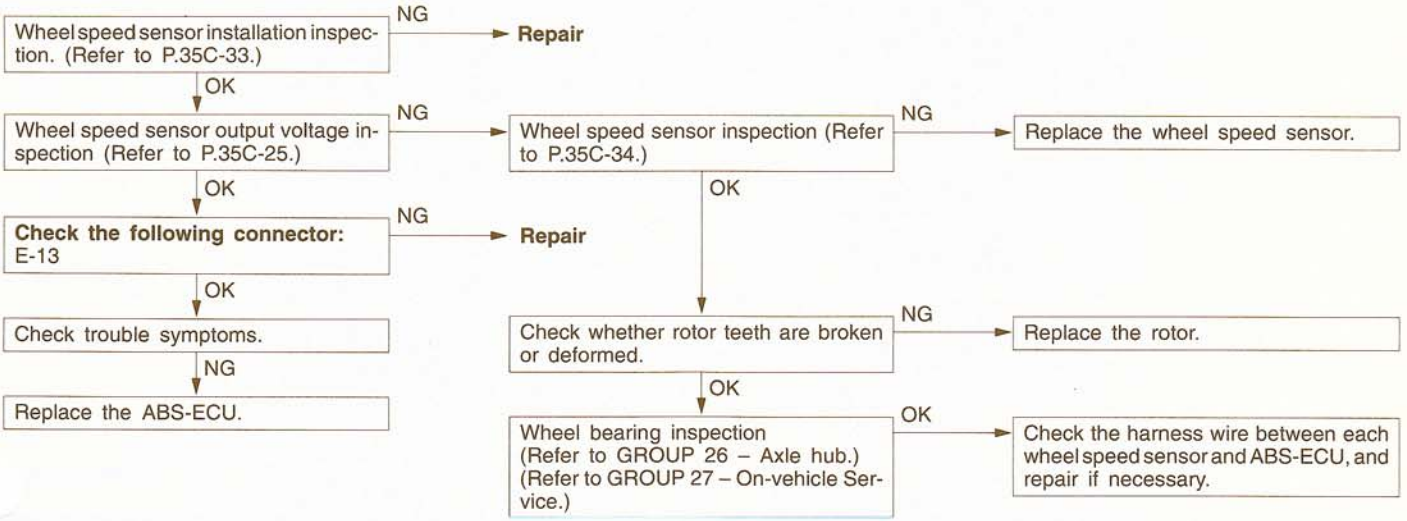


TSB Revision 96-35-008

| Code No.16 Power supply system | Probable cause |
|---|---|
| [Comment]<br>The ABS-ECU power supply voltage or the solenoid valve power supply voltage is less than the specified value.<br>If the voltage returns to the specified value, this code is no longer output. | • Malfunction of wiring harness or connector.<br>• Malfunction of ABS-ECU |

**Caution**
**If the battery voltage drops or rises during inspection, this code will be output as a current problem, and correct diagnosis of the problem cannot be made.**
**Before carrying out the following inspection, check the battery level, and refill it if necessary.**

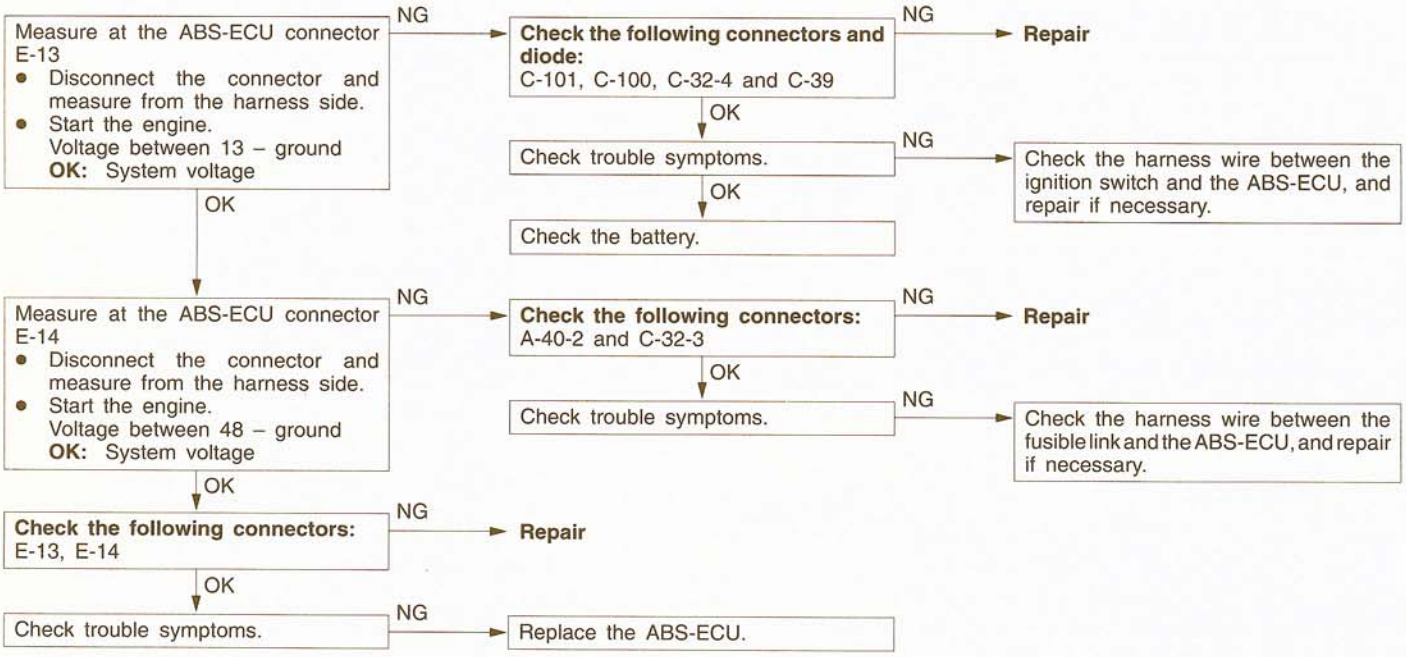


TSB Revision

| Code No.21, 22, 23, 24 Wheel speed sensor short circuit | Probable cause |
|---|---|
| [Comment]<br>The above codes are output in the following cases.<br>• An open circuit cannot be found out, but a wheel speed sensor does not output any signal when driving at 8 km/h or higher.<br>• As the sensor output drops due to a malfunctioning sensor or a warped rotor, anti-lock control is continuously carried out. | • Malfunction of wheel speed sensor<br>• Malfunction of rotor<br>• Malfunction of wheel bearing<br>• Malfunction of wiring harness or connector<br>• Malfunction of ABS-ECU |

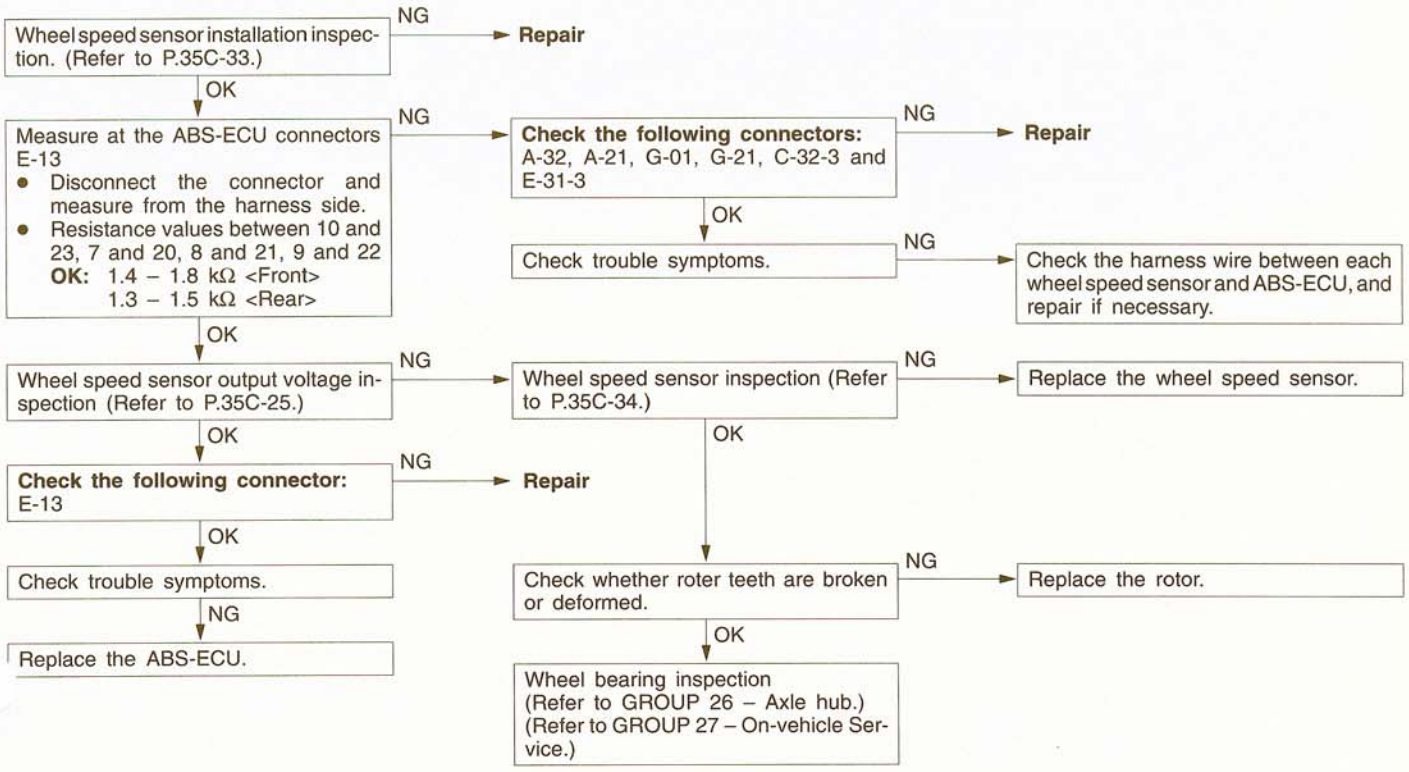


| Code No.25 Free wheel engage switch | Probable cause |
|---|---|
| [Comment]<br>There is an open circuit in the free-wheeling engage switch system. | • Malfunction of wiring harness or connector<br>• Malfunction of 4WD indicator ECU<br>• Malfunction of ABS-ECU |

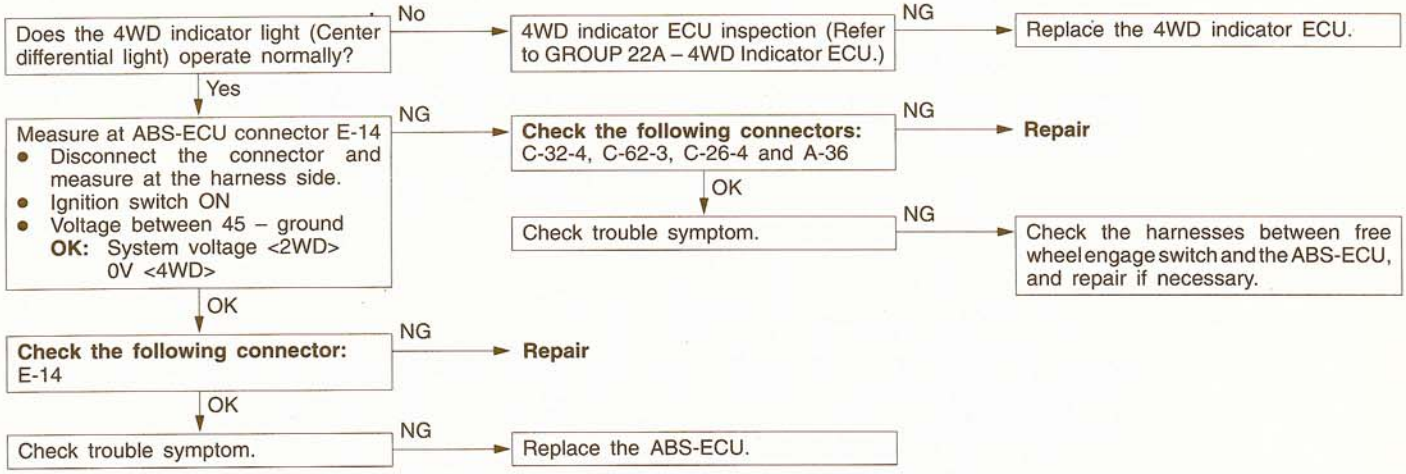

| Code No.26 Centre differential lock detection switch | Probable cause |
|---|---|
| [Comment]<br>The above codes are output in the following cases.<br>• There is an open circuit in the center differential lock detection switch system.<br>• The free wheel engage switch remains off and the center differential lock detection switch remains on at a vehicle speed of 15 km/h or more for 5 seconds or more. | • Malfunction of wiring harness or connector<br>• Malfunction of free wheel engage switch<br>• Malfunction of 4WD indicator ECU<br>• Malfunction of center differential lock detection switch<br>• Malfunction of ABS-ECU |

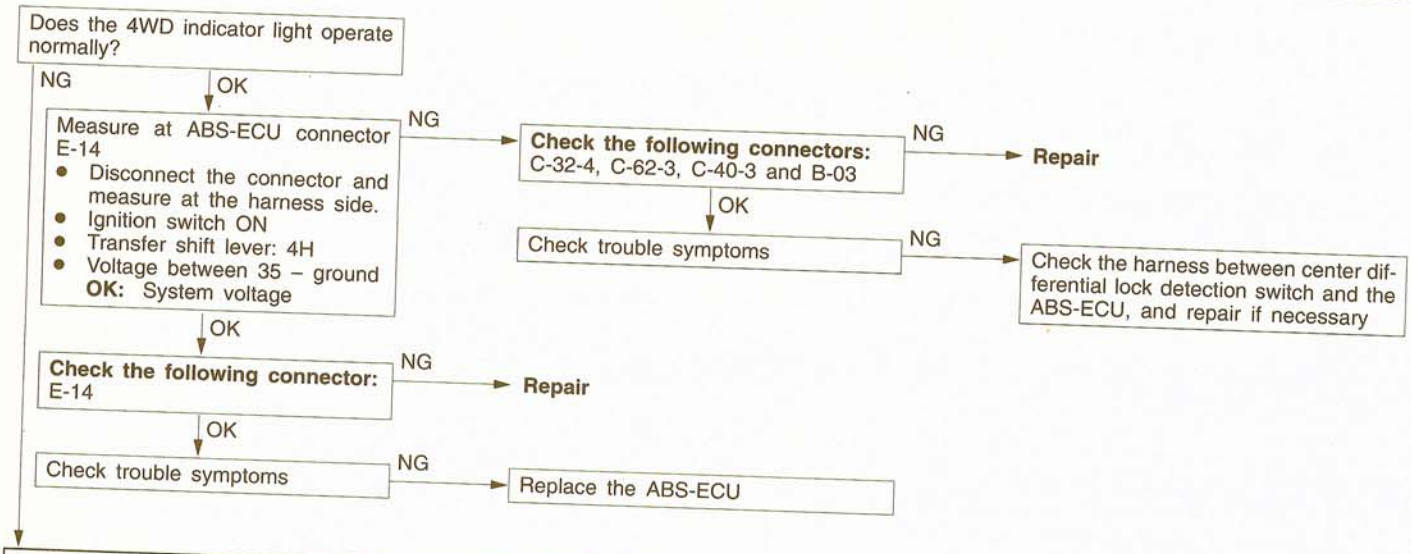


| Trouble symptom | Main cause | Remedy |
|---|---|---|
| Even when the transfer shift lever is in the "4H" position, the 4WD front wheel indicator light does not illuminate. | Broken harness wire between the 4WD indicator ECU and the free-wheel engage switch, or broken earth wire from the free-wheel engage switch. | Repair the harness |
| | Free wheel engage switch is defective | Replace the switch |
| Even when the transfer shift lever is in the "4H" position, the 4WD center differential light does not illuminate. | Broken harness wire between the 4WD indicator ECU and the center differential lock switch | Repair the harness |
| | Broken wire in the 4WD indicator ECU circuit | 4WD indicator ECU inspection (Refer to GROUP 22A – 4WD Indicator ECU.) |
| 4WD indicator center differential light illuminates regardless of the position of the transfer shift lever | Short in the harness wire in the center differential lock detection switch circuit | Repair the harness |
| | Center differential lock detection switch is defective | Replace the switch |
| | Short inside the ABS-ECU circuit | Replace the ABS-ECU |
| | Short inside the the 4WD indicator ECU circuit | 4WD indicator ECU inspection (Refer to GROUP 22A – 4WD Indicator ECU.) |
| No indicator is illuminated | Power circuit in the 4WD indicator ECU circuit | Repair the harness |
| | 4WD indicator ECU is defective | 4WD indicator ECU inspection (Refer to GROUP 22A – 4WD Indicator ECU.) |

NOTE
When checking a short in the ABS-ECU circuit, remove the ABS-ECU connector and check if the 4WD indicator returns to normal. If it returns to normal, the ABS-ECU is defective. Furthermore, if the ABS-ECU is normal, then the 4WD indicator ECU will be defective.

**TSB Revision**

| Code No.27 Rear differential lock detection switch <Vehicles with rear differential lock> | Probable cause |
|---|---|
| [Comment]<br>There is an open circuit in the rear differential lock detection switch system. | • Malfunction of wiring harness or connector<br>• Malfunction of rear differential lock ECU<br>• Malfunction of ABS-ECU |

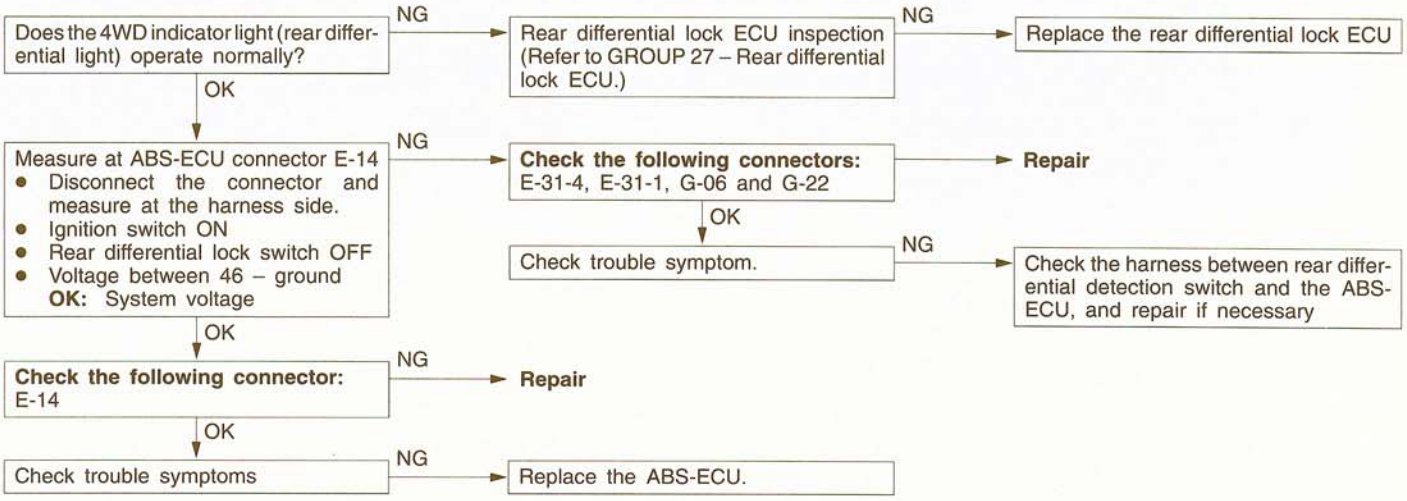


| Code No.27 Rear differential lock detection switch <Vehicles without rear differential lock> | Probable cause |
|---|---|
| [Comment]<br>For vehicles without rear differential lock, battery positive voltage is applied to the ABS-ECU terminal no. 46.<br>This diagnostic trouble code is output when this line is interrupted. | • Malfunction of wiring harness or connector<br>• Malfunction of ABS-ECU |

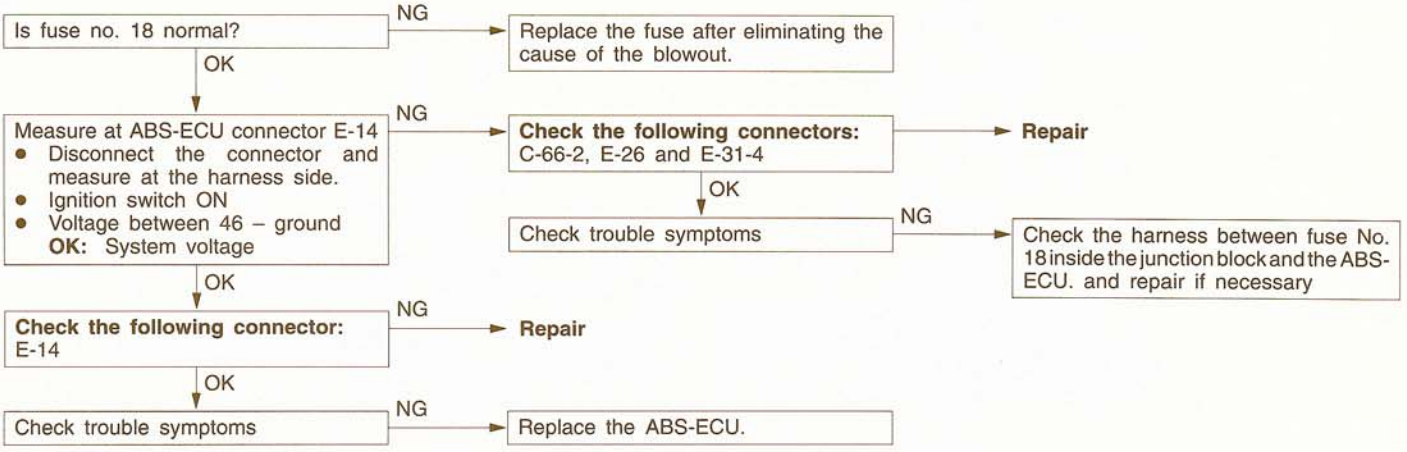

| Code No.32 G-sensor system | Probable cause |
|---|---|
| [Comment]<br>The above codes are output in the following case.<br>• The G sensor output is less than 0.5 V or more than 4.5 V.<br>• There is an open or short circuit in the G sensor system. | • Malfunction of G-sensor<br>• Malfunction of wiring harness or connector<br>• Malfunction of ABS-ECU |

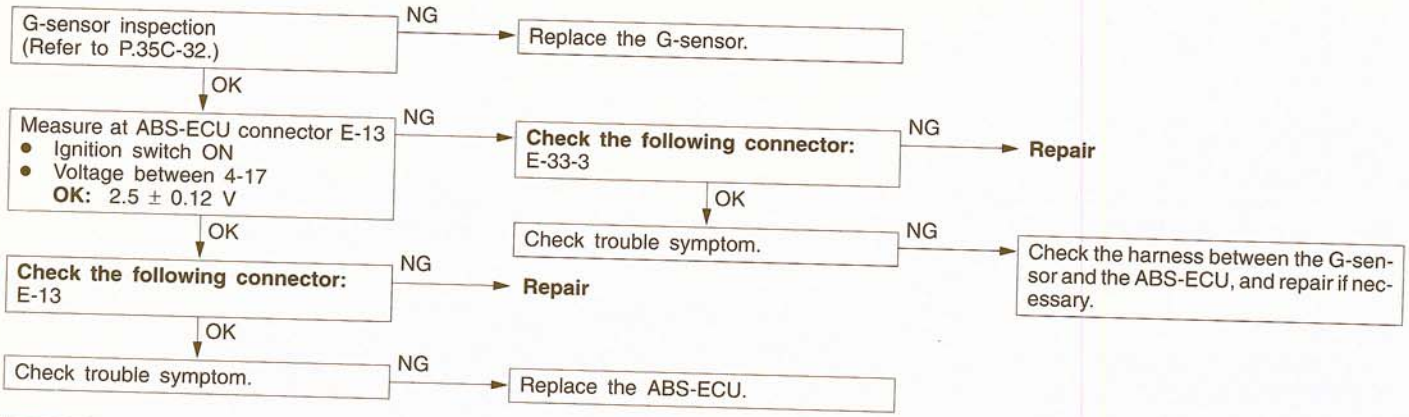


| Code No.33 Stop light switch system | Probable cause |
|---|---|
| [Comment]<br>The above codes are output in the following cases.<br>• The stop light switch can not be turned off. (the stop light switch stays on for 15 minutes or more even though the ABS is not operating)<br>• There is an open circuit in the stop light switch system. | • Malfunction of stop light switch<br>• Malfunction of harness or connector<br>• Malfunction of ABS-ECU |

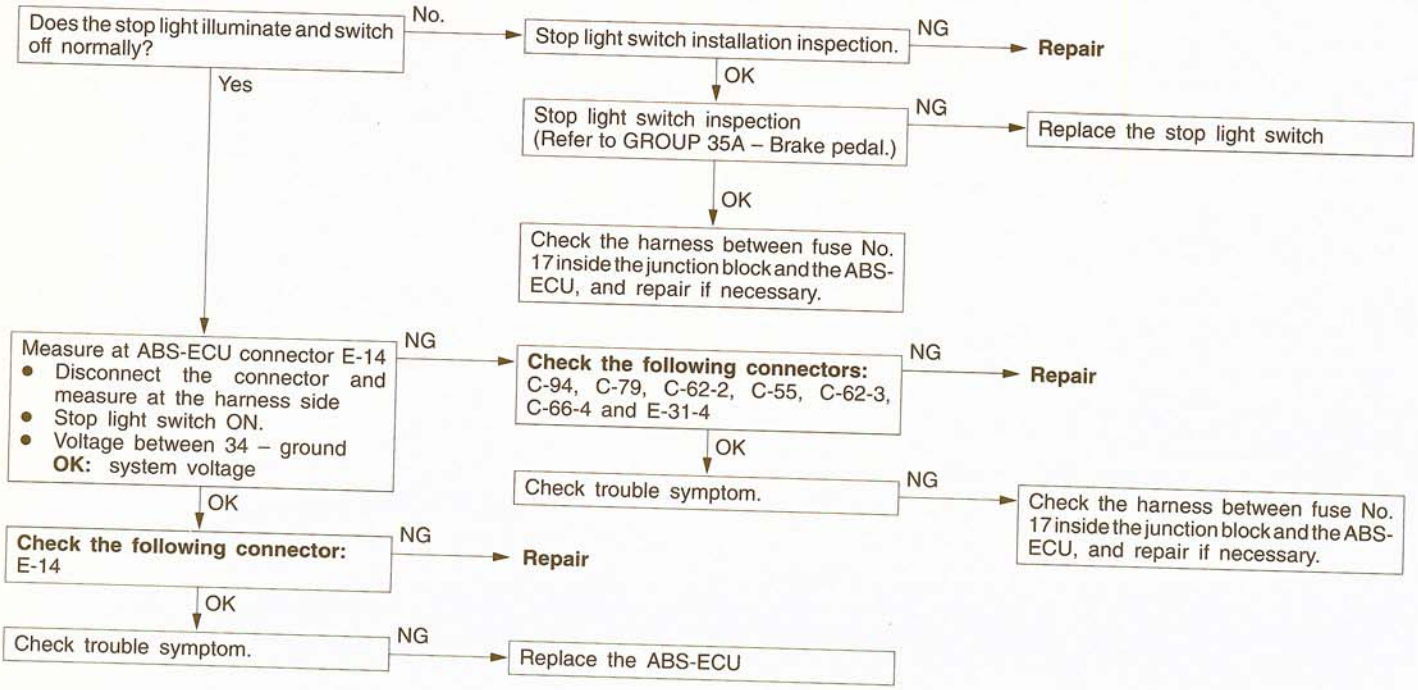


TSB Revision

| Code No.41, 42, 43 solenoid valve | Probable cause |
|---|---|
| [Comment]<br>The ABS-ECU always monitors the solenoid drive circuit and judge that there is an open or short circuit in the solenoid coils in the following cases.<br>No current is being supplied to a solenoid even though that solenoid is on.<br>Current continues to be supplied to a solenoid even though that solenoid is off. | • Malfunction of wiring harness<br>• Malfunction of hydraulic unit<br>• Malfunction of ABS-ECU |

Measure at hydraulic unit connector A-39 and A-40.
- Disconnect the connector and measure at the harness side.
- Resistance values between the following terminals
  4-12, 5-12, 6-12
  **OK:** 4.7±0.25 Ω
  1-12, 2-12, 3-12
  **OK:** 9.0±0.5 Ω

NG → Replace the hydraulic unit.

OK ↓

Measure at hydraulic unit connector A-39 and ABS-ECU connectors E-13 and E-14
- Disconnect the connector and measure at the harness side.
- Continuity between the following terminals
  **OK:** Continuity

| | | | | |
|---|---|---|---|---|
| HU side | 2 | 5 | 3 | 6 |
| ABS-ECU side (E-13) | 14 | 1 | 3 | 2 |

| | | |
|---|---|---|
| HU side | 1 | 4 |
| ABS-ECU side (E-14) | 52 | 41 |

NG → **Check the following connectors:** C-32-3, A-39, E-13 and E-14
NG → **Repair**
OK ↓
Check trouble symptoms.
NG ↓
Check the harness between the hydraulic unit and ABS-ECU, and repair if necessary.

OK ↓

Measure at hydraulic unit connector A-40 and ABS relay box connector A-40-2
- Disconnect the connector and measure at the harness side.
- Continuity between the following terminals
  **OK:** Continuity

| | |
|---|---|
| HU side | 12 |
| ABS relay box side | 1 |

NG → **Check the following connectors:** A40, A-40-2
NG → **Repair**
OK ↓
Check trouble symptoms.
NG → Check the harness between the hydraulic unit and valve relay, and repair if necessary.

OK ↓

**Check the following connectors:** E-13, E-14
NG → **Repair**

OK ↓

Check trouble symptoms.
NG → Replace the ABS-ECU.

**TSB Revision**

| Code No.51 Valve relay | Probable cause |
|---|---|
| [Comment]<br>When the ignition switch is turned to ON, the ABS-ECU switches the valve relay off and on to check it as the initial check. The valve relay is normally on. So, if power is not being supplied to the relay, the ABS-ECU will judge that the valve relay is defective. | • Malfunction of valve relay<br>• Malfunction of wiring harness or connector<br>• Malfunction of ABS-ECU<br>• Malfunction of hydraulic unit |

NOTE

Whenever reading the diagnostic trouble codes using the ABS warning light (P.35C-4), this diagnostic trouble code will be output. That is because the valve relay has been removed.
Repair all locations indicated by other diagnostic trouble codes, and then connect the valve relay connector.
When the ABS warning light still indicates No.51 even after that, a malfunction in the valve relay system may be present. So, the following checks should then be carried out.

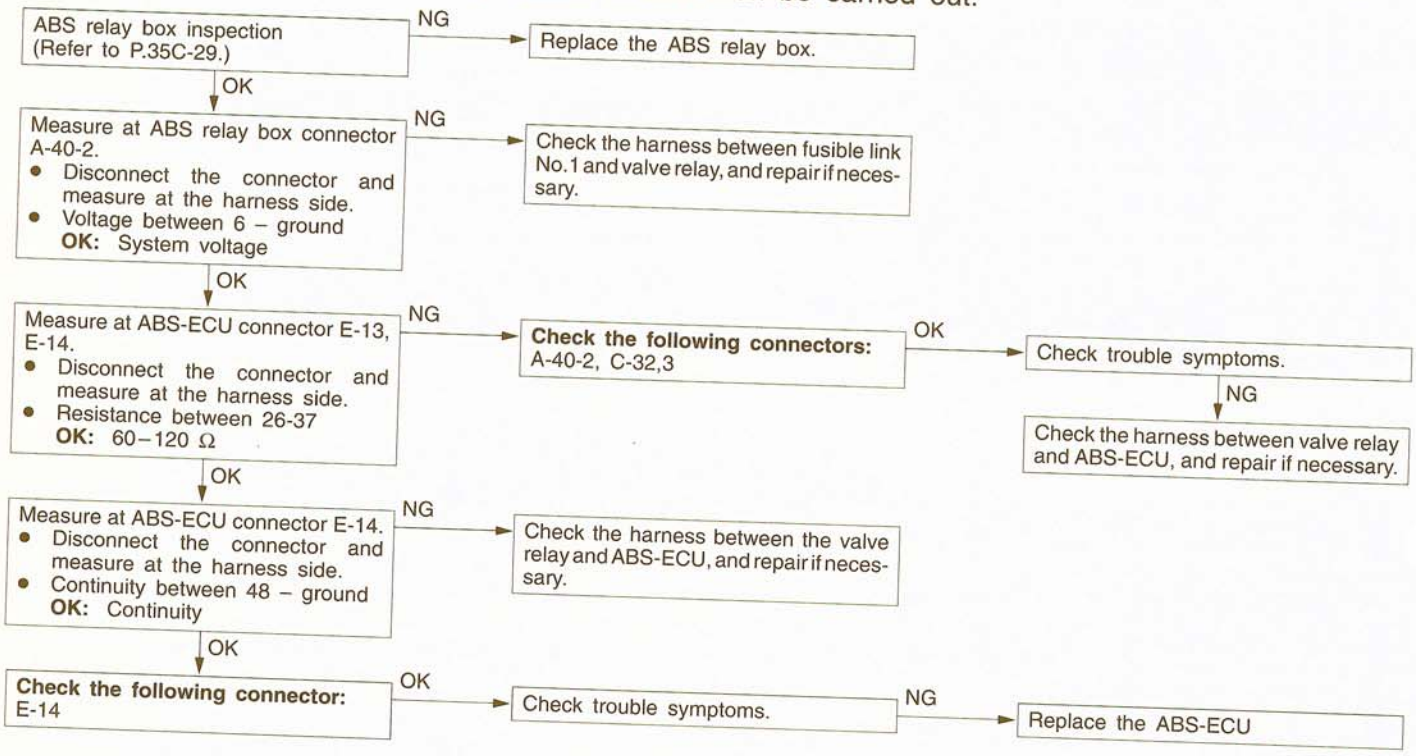


TSB Revision

| Code No.53 Motor relay, motor | Probable cause |
|---|---|
| [Comment]<br>The above codes are output in the following cases.<br>• When the motor relay is on but no signal is input to the motor monitor line (motor does not run, etc.)<br>• When the motor relay is off and a signal is input to the motor monitor line for 5 seconds or more (motor does not stop, etc.)<br>• When the motor relay does not work | • Malfunction of motor relay<br>• Malfunction of wiring harness or connector<br>• Malfunction of hydraulic unit<br>• Malfunction of ABS-ECU |

## Caution

**Because force-driving of the motor by means of the actuator test will drain the battery, the engine should be started and left to run for a while after testing is completed.**

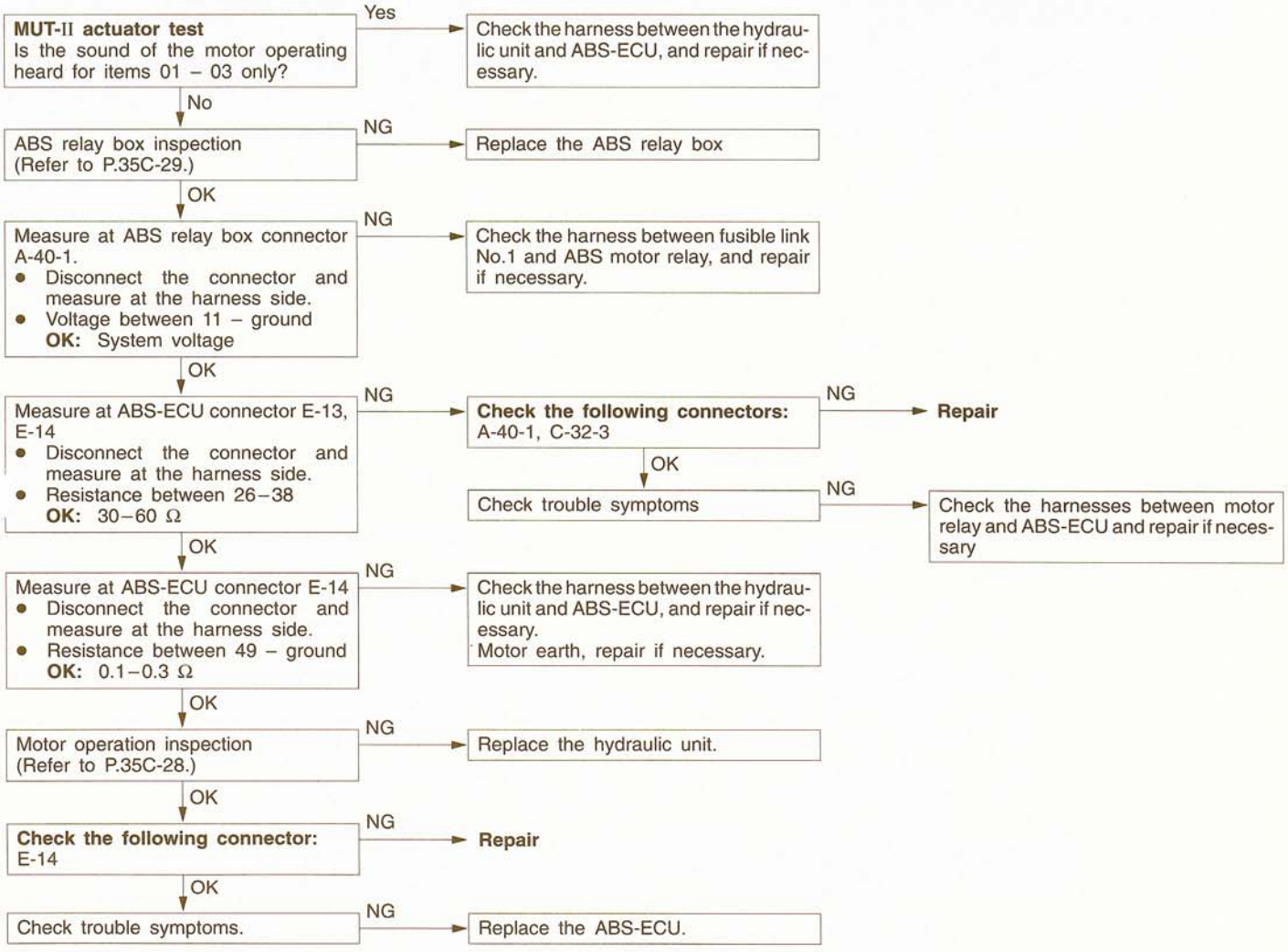


TSB Revision

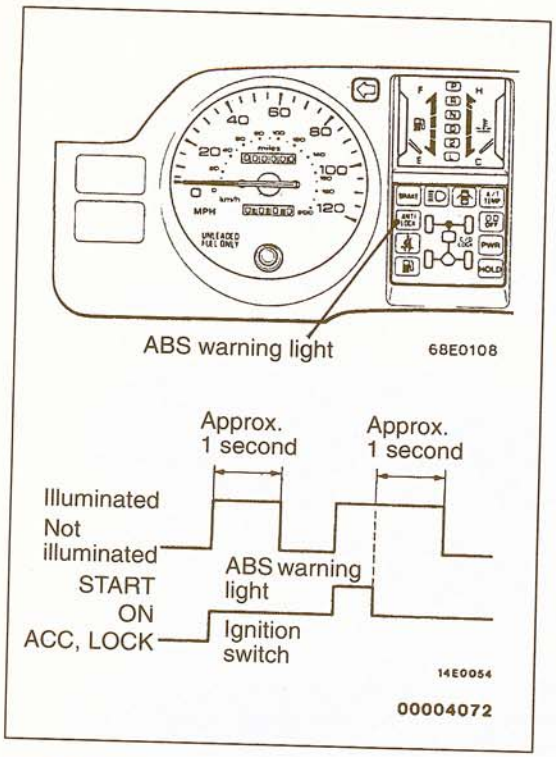


## ABS WARNING LIGHT INSPECTION

35201200017

Check that the ABS warning light illuminates as follows.

1. When the ignition key is turned to ON, the ABS warning light illuminates for approximately 1 second and the switches off.
2. When the ignition key is turned to START, the ABS warning light remains illuminated.
3. When the ignition key is turned from START back to ON, the ABS warning light illuminates for approximately 1 second and then stays switched off.
4. If the illumination is other than the above, check the diagnosis codes.

## INSPECTION CHART FOR TROUBLE SYMPTOMS

35201140050

Get an understanding of the trouble symptoms and check according to the inspection procedure chart.

| Trouble symptom | | Inspection procedure No. | Reference page |
|---|---|---|---|
| Communication with MUT-II is not possible. | Communication with all systems is not possible. | 1 | 35C-17 |
| | Communication with ABS only is not possible. | 2 | 35C-17 |
| When the ignition key is turned to "ON" (engine stopped), the ABS warning light does not illuminate. | | 3 | 35C-18 |
| After the engine starts, the light remains illuminated. | | 4 | 35C-18 |
| When the ignition key is turned to "START", the ABS warning light does not illuminate. | | 5 | 35C-19 |
| After the ignition key is turned to "ON", the ABS warning light blinks twice, and when turned to "START", it illuminates. When returned to "ON", the light flashes once, and then switches off. | | 6 | 35C-19 |
| Faulty ABS operation | Unequal braking power on both sides | 7 | 35C-20 |
| | Insufficient braking power | 7 | 35C-20 |
| | ABS operates under normal braking conditions | 7 | 35C-20 |
| | ABS operates before vehicle stops under normal braking conditions | 7 | 35C-20 |
| | Large brake pedal vibration (Caution 2.) | – | – |

**Caution**

1. **If steering movements are made when driving at high speed, or when driving on road surfaces with low frictional resistance, or when passing over bumps, the ABS may operate even though sudden braking is not being applied. Because of this, When getting information from the custome check if the problem occurred while driving under such conditions as these.**
2. **During ABS operation, changes in the feeling of the brake pedal (vibration may occur or pedal may not be able to be depressed). Such changes are due to intermittent changes in hydraulic pressure inside the brake line to prevent the wheels from locking and is not an abnormality.**

**TSB Revision**

# INSPECTION PROCEDURE FOR TROUBLE SYMPTOMS

## Inspection Procedure 1

| Communication with MUT-II is not possible. (Communication with all system is not possible.) | Probable cause |
|---|---|
| [Comment]<br>The reason is probably a defect in the power supply system (including earth) for the diagnosis line. | • Malfunction of connector<br>• Malfunction of harness |

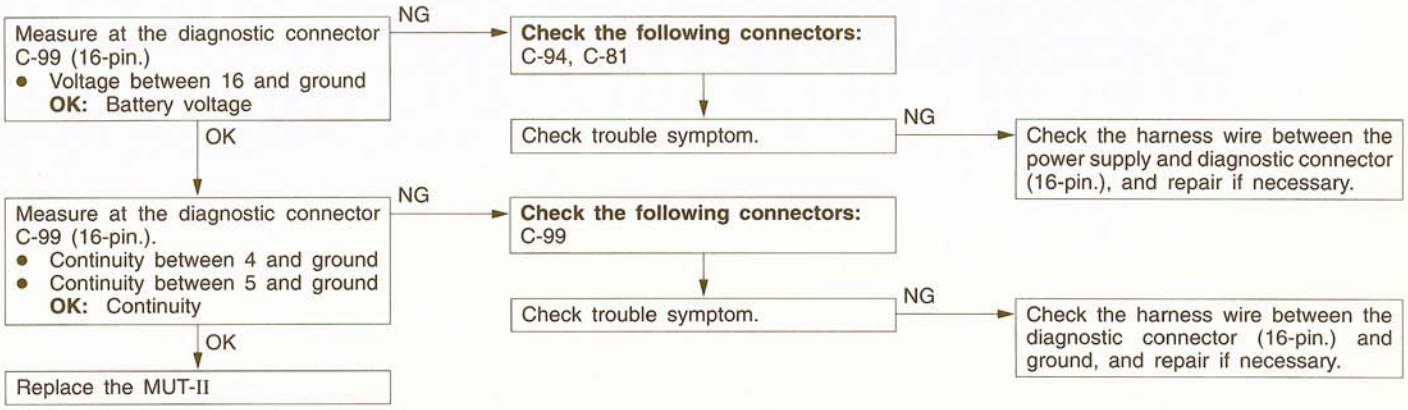


## Inspection Procedure 2

| Communication with MUT-II is not possible. (Communication with ABS only is not possible.) | Probable cause |
|---|---|
| [Comment]<br>When communication with the MUT-II is not possible, the cause is probably an open circuit in the ABS-ECU power circuit or an open circuit in the diagnosis output circuit. | • Blown fuse<br>• Malfunction of wiring harness or connecter<br>• Malfunction of ABS-ECU |

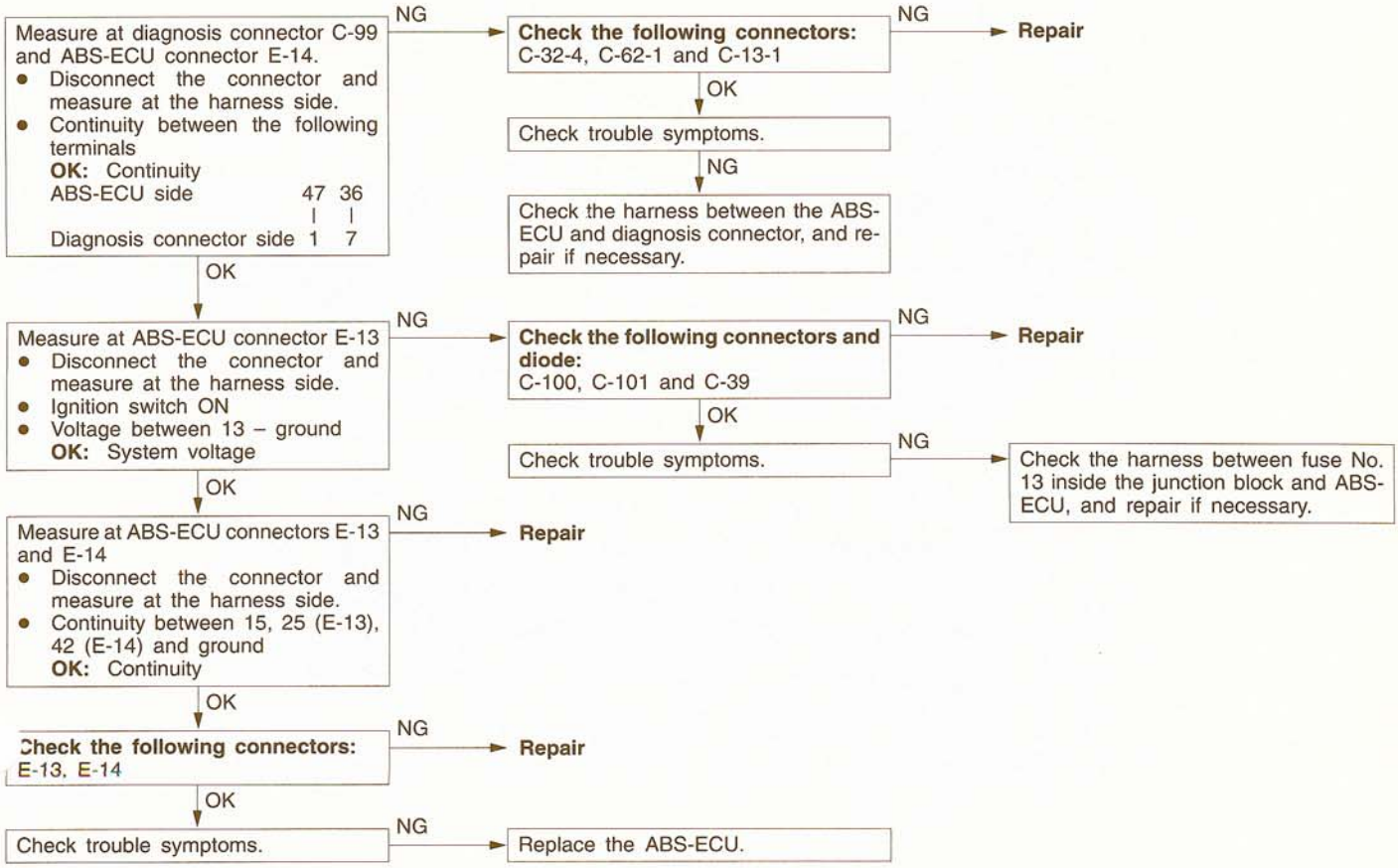


**TSB Revision**

## Inspection Procedure 3

| When ignition key is turned to "ON" (engine stopped), ABS warning light does not illuminate | Probable cause |
|---|---|
| [Comment]<br>When power is supplied to the ABS-ECU, the valve relay turns from off to on, off and back to on again as an initial check.<br>Because of this, the ABS warning light will illuminate twice when the valve relay is off even if there is a problem with the circuit between the ABS warning light and the ABS-ECU.<br>Accordingly, if the light does not illuminate, the cause is probably one of the following items.<br>An open circuit in the light power supply circuit<br>A blown light bulb<br>An open circuit in both the circuit between the ABS warning light and the ABS-ECU and in the circuit between the ABS warning light and the valve relay | • Blown fuse<br>• Burnt out ABS warning light bulb<br>• Malfunction of wiring harness or connector |

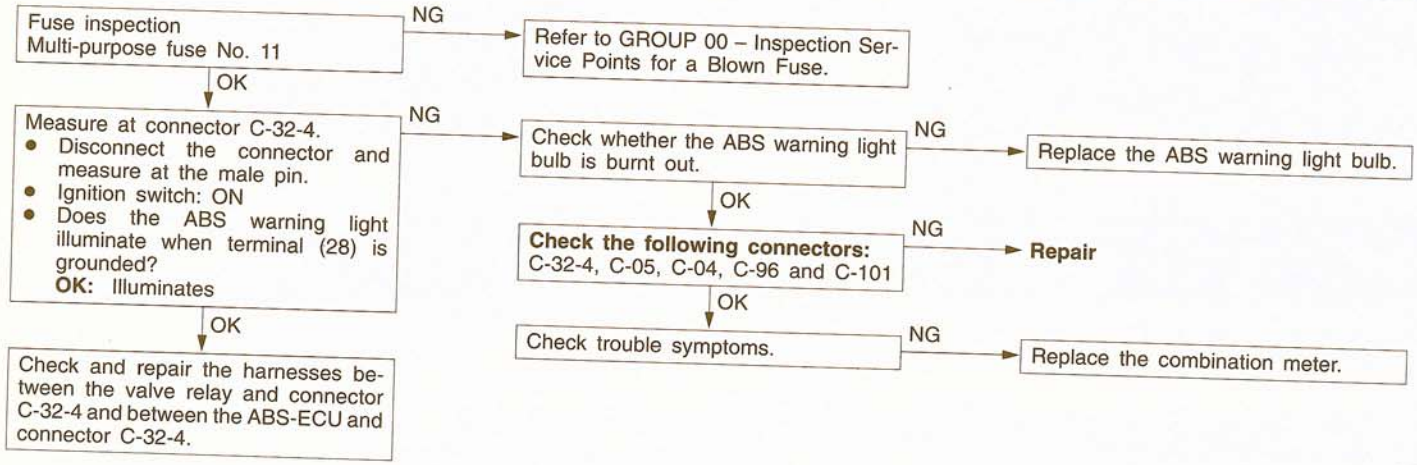


## Inspection Procedure 4

| Even after the engine is started, the ABS warning light remains illuminated. | Probable cause |
|---|---|
| [Comment]<br>A short-circuit in the ABS warning light illumination circuit may be present. | • Malfunction of combination meter<br>• Malfunction of ABS-ECU<br>• Malfunction of wiring harness |

NOTE
This trouble symptom is limited to cases where communication with the MUT-II is possible (ABS-ECU power supply is normal) and the diagnosis code is a normal diagnosis code.

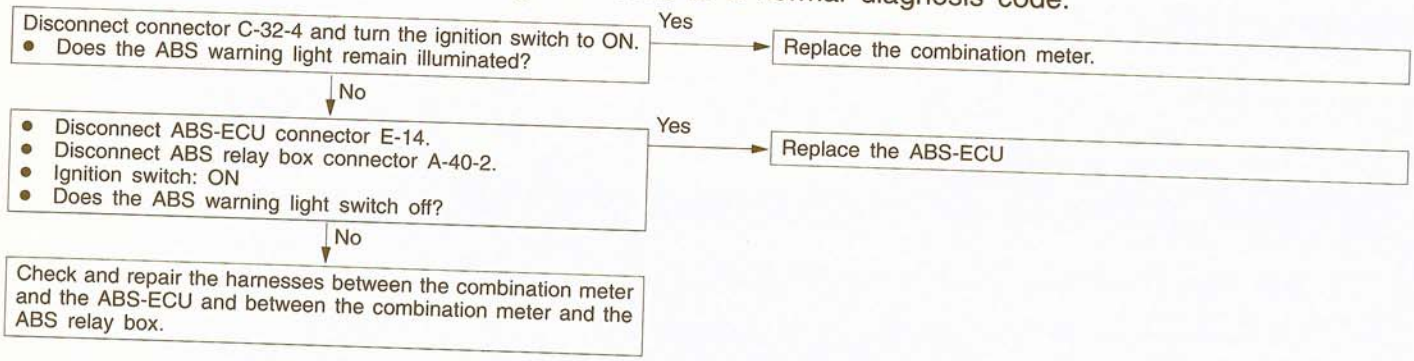


TSB Revision

## Inspection Procedure 5

| When ignition key is turned to "START", ABS warning light does not illuminate. | Probable cause |
|---|---|
| [Comment]<br>The ABS-ECU uses the power supply which is turned off when the ignition switch is turned to START. The ABS warning light uses the power supply which is not turned off when the ignition switch is turned to START. Accordingly, when the ignition switch is at START, the power supply to the ABS-ECU is turned off and the valve relay is also turned off. So, when the ABS warning light does not illuminate at this time, the light illumination circuit in the valve relay system is defective. | • Malfunction of wiring harness or connector<br>• Malfunction of ABS relay box |

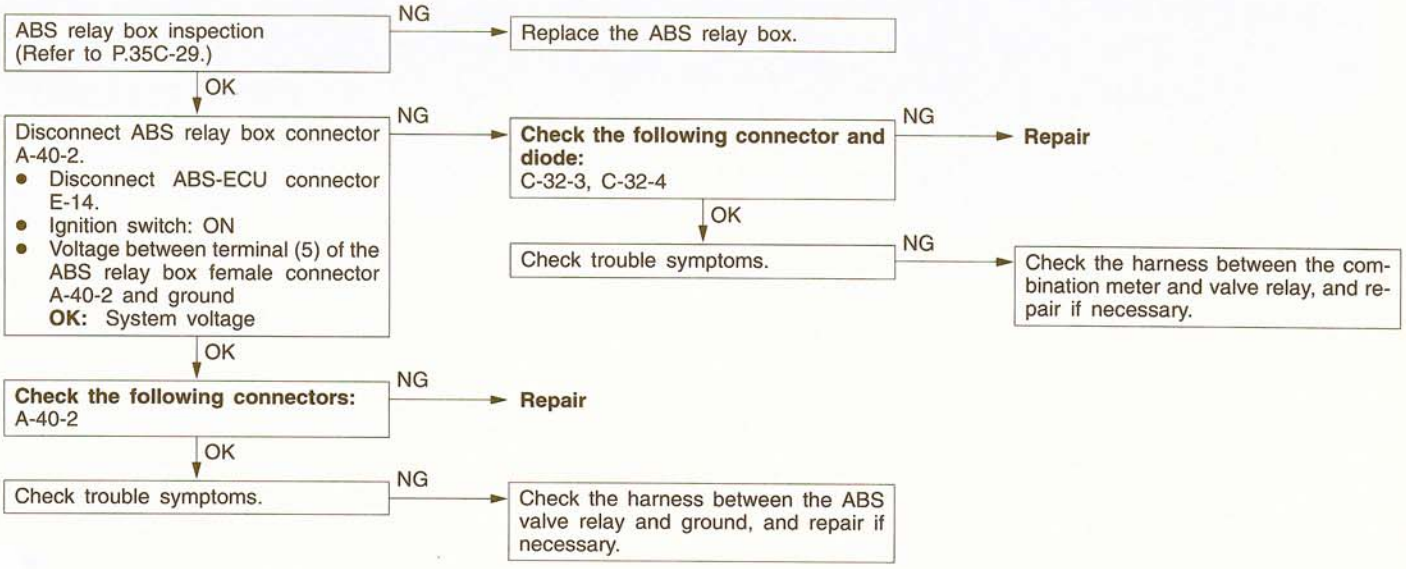


## Inspection Procedure 6

| The ABS warning light flashes twice after the ignition key is turned to "ON". The light illuminates when the ignition key is turned to "START", and when the key is returned to "ON", it flashes once. | Probable cause |
|---|---|
| [Comment]<br>The ABS-ECU causes the ABS warning light to illuminate during the initial check (approx. 1 second). During the initial check, the valve relay turns from off to on, off and back to on again, and if there is a open circuit in the harness between the ABS-ECU and the ABS warning light, the light will illuminate only when the valve relay is OFF because of a valve relay test, etc. | • Malfunction of wiring harness or connector<br>• Malfunction of ABS-ECU |

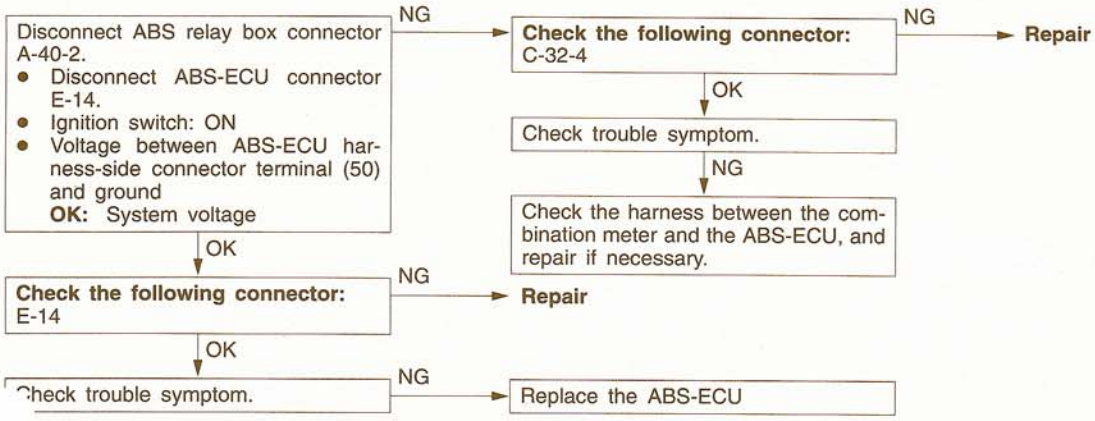


**TSB Revision**

## Inspection Procedure 7

| Break operation is abnormal | Probable cause |
|---|---|
| [Comment]<br>This varies depending on the driving conditions and the road surface conditions, so problem diagnosis is difficult. However, if a normal diagnosis code is displayed, carry out the following inspection. | • Improper installation of wheel speed sensor<br>• Incorrect sensor harness contact<br>• Foreign material adhering to wheel speed sensor<br>• Malfunction of wheel speed sensor<br>• Malfunction of rotor<br>• Malfunction of wheel bearing<br>• Malfunction of hydraulic unit<br>• Malfunction of ABS-ECU |

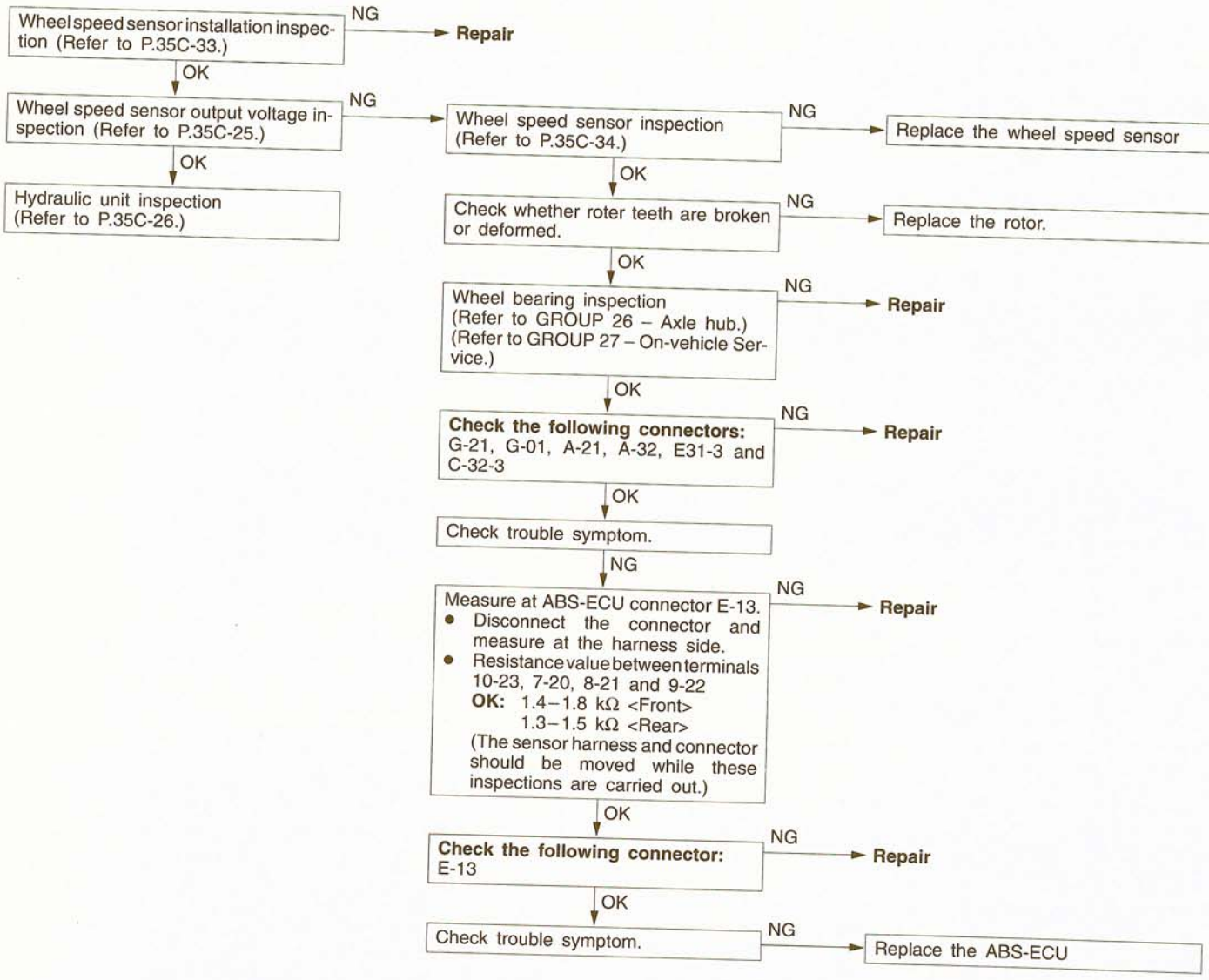


TSB Revision

## SERVICE DATA INSPECTION TABLE

35201150046

The following items can be read by the scan tool from the ABS-ECU input data.

### . When the system is normal

| Item No. | Inspection Item | Inspection Conditions | Normal Judgement Value |
|---|---|---|---|
| 11 | Front-right wheel speed sensor | When vehicle is being driven | Vehicle speeds displayed on the speedometer and scan tool are identical. |
| 12 | Front-left wheel speed sensor | | |
| 13 | Rear-right wheel speed sensor | | |
| 14 | Rear-left wheel speed sensor | | |
| 16 | ABS-ECU power supply voltage | IG power supply voltage and valve monitor voltage | 9–16 V |
| 25 | Free wheel engage switch | During 4WD | ON |
| | | During 2WD | OFF |
| 26 | Center differential lock detection switch | When transfer lever is at 4HLC | ON |
| | | When transfer lever is at 4H | OFF |
| 27 | Rear differential lock detection switch | When switch is on | ON |
| | | When switch is off | OFF |
| 32 | G sensor output voltage | When vehicle is stationary | 2.5 ± 0.12 V |
| | | When vehicle is being driven | Display value fluctuates with a mean value of 2.5 V. |
| 33 | Stop light switch | When brake pedal is depressed | ON |
| | | When brake pedal is released | OFF |

### 2. When system is isolated by the ABS-ECU

When the functioning of the ABS-ECU has been stopped by the on-board diagnostics, the scan tool display data will be different from actual conditions.

## ACTUATOR TEST INSPECTION TABLE

35201160018

The following actuators can be force-activated using the scan tool.

NOTE

1. If the functioning of the ABS-ECU has been stopped, actuator testing cannot be carried out.
2. Actuator testing is only possible when the vehicle is stationary. If the vehicle speed during actuator testing exceeds 10 km/h (6 mph), forced actuation will be canceled.

## ACTUATOR TEST SPECIFICATIONS

| No. | Driving objective | | Driving pattern |
|---|---|---|---|
| 01 | Solenoid valve and pump motors for each corresponding channel in the hydraulic unit | Solenoid valve for front left wheel | 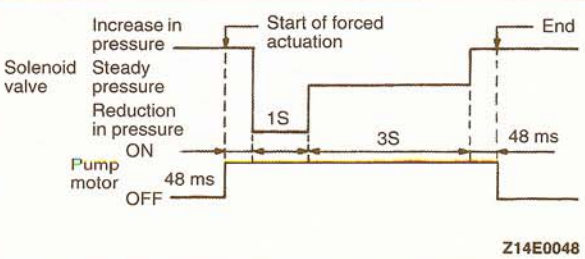 |
| 02 | | Solenoid valve for front right wheel | |
| 03 | | Solenoid valve for rear wheels | |



TSB Revision

## TERMINAL VOLTAGE CHART

### TERMINAL VOLTAGE CHART

35201180052

1. Measure the voltages between terminals (12), (25) and (42) (ground terminals) and each respectiv terminal.
2. The terminal layouts are shown in the illustrations below.







14W0042

| Connector Terminal No. | Name of Signal | Inspection Condition | | Normal Condition |
|---|---|---|---|---|
| 1 | Output from front-left hydraulic unit solenoid (from wheel cylinder) | Ignition switch : ON (When solenoid is off approximately 1 second after engine is started) | | System voltage |
| 2 | Output from rear hydraulic unit solenoid (from wheel cylinder) | | | |
| 3 | Output from rear hydraulic unit solenoid (to wheel cylinder) | | | |
| 4 | G sensor signal | Ignition switch : ON | | 2.5 ± 0.12 V (Horizontal condition) |
| 13 | ABS-ECU power supply | Ignition switch : ON | | System voltage |
| | | Ignition switch: START | | 0 V |
| 14 | Output from front-left hydraulic unit solenoid (to wheel cylinder) | Ignition switch : ON (When solenoid is off approximately 1 second after engine is started) | | System voltage |
| 17 | G sensor ground | At all times | | 0 V |
| 26 | Relay power supply output | Ignition switch : ON | | System voltage |
| 32 | Memory power supply | At all times | | System voltage |
| 34 | Stop light switch input | Ignition switch : ON | Stop light switch ON | System voltage |
| | | | Stop light switch OFF | 1 V or less |
| 35 | Center differential lock detection switch input | Ignition switch : ON | Transfer lever: 4H | System voltage |
| | | | Transfer lever: 4Lc | 1 V or less |
| 36 | MUT-II | When scan tool is connected | | Serial communication with scan tool |
| | | When scan tool is not connected | | 1 V or less |
| 37 | Valve relay output | Ignition switch : ON | When relay is on approximately 1 second after engine is started | 2 V or less |
| | | | When system is normal and relay is off | System voltage |
| 38 | Motor relay output | Ignition switch : ON (approximately 1 second after engine is started) | When motor is on | 2 V or less |
| | | | When motor is off | System voltage |
| 39 | Idle-up solenoid (negative side) | Ignition switch : ON (When motor is on approximately 1 second after engine is started) | | 2 V or less |

**TSB Revision**

| Connector Terminal No. | Name of Signal | Inspection Condition | | Normal Condition |
|---|---|---|---|---|
| 41 | Output from front-right hydraulic unit solenoid (from wheel cylinder) | Ignition switch : ON (When solenoid is off approximately 1 second after engine is started) | | System voltage |
| 43 | Idle-up solenoid (positive side) | Ignition switch : ON When motor is on approximately 1 second after engine is started) | | System voltage |
| 45 | Free wheel engage switch input | Ignition switch : ON | During 4WD | System voltage |
| | | | During 2WD | 1 V or less |
| 46*1 | Ignition switch | Ignition switch : ON | | System voltage |
| | | Ignition switch: START | | 0 V |
| 46*2 | Rear differential lock detection switch input | Ignition switch : ON | Rear differential lock switch: ON | 0 V |
| | | | Rear differential lock switch: OFF | System voltage |
| 47 | Diagnostic selection input | When scan tool is connected | | 0 V |
| | | When scan tool is not connected | | Approx. 12 V |
| 48 | Valve relay monitor input | Ignition switch : ON | | System voltage |
| 49 | Motor monitor | Ignition switch : ON (approximately 1 second after engine is started) | When motor is on | System voltage |
| | | | When motor is off | 0.5 V or less |
| 50 | ABS warning light output | Ignition switch : ON | When light is switched off | System voltage |
| | | | When light is illuminated | 0–2 V |
| 52 | Output from front-right hydraulic unit solenoid (to wheel cylinder) | Ignition switch : ON (When solenoid is off approximately 1 second after engine is started) | | System voltage |

NOTE
(1)*1: Vehicles without rear differential lock.
(2)*2: Vehicles with rear differential lock.

## RESISTANCE AND CONTINUITY BETWEEN HARNESS-SIDE CONNECTOR TERMINALS

1. Turn the ignition switch off and disconnect the ABS-ECU connector before measuring resistance and checking continuity.
2. Measure resistance and check continuity between the terminals indicated in the table below.
3. The terminal layouts are shown in the illustrations below.

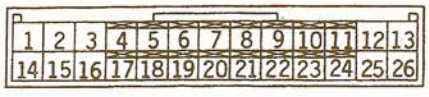





14W0043

| Connector Terminal No. | Name of Signal | Normal Condition |
|---|---|---|
| 1 – Ground | Front-left solenoid (from wheel cylinder) | 4.7 ± 0.25 Ω |
| 2 – Ground | Rear solenoid (from wheel cylinder) | 4.7 ± 0.25 Ω |
| 3 – Ground | Rear solenoid (to wheel cylinder) | 9.0 ± 0.5 Ω |
| 7 – 20 | Front-left wheel speed sensor (positive wire) | 1.4 – 1.8 kΩ |

**TSB Revision**

| Connector Terminal No. | Name of Signal | Normal Condition |
|---|---|---|
| 8 – 21 | Rear-right wheel speed sensor (positive wire) | 1.3 – 1.5 kΩ |
| 9 – 22 | Rear-left wheel speed sensor (positive wire) | 1.3 – 1.5 kΩ |
| 10 – 23 | Front-right wheel speed sensor (positive wire) | 1.4 – 1.8 kΩ |
| 14 – Ground | Front-left solenoid (to wheel cylinder) | 9.0 ± 0.5 kΩ |
| 15 – Ground<br>25 – Ground | ABS-ECU ground | Continuity |
| 39 – 43 | Idle-up solenoid | 33 – 39 Ω |
| 41 – Ground | Front-right solenoid (from wheel cylinder) | 4.7 ± 0.25 kΩ |
| 42 – Ground | ABS-ECU ground | Continuity |
| 48 – Ground | Valve relay monitor input | Continuity |
| 49 – Ground | Motor monitor | Continuity |
| 52 – Ground | Front-right solenoid (to wheel cylinder) | 9.0 ± 0.25 kΩ |

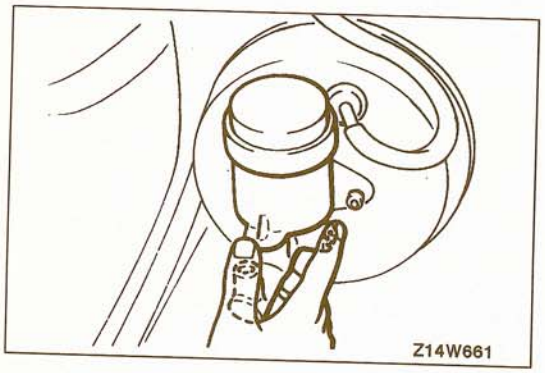


# ON-VEHICLE SERVICE

35200150054

## BLEEDING

**Caution**
**Use the specified brake fluid. Avoid using a mixture o. the specified brake fluid and other fluid.**

**Specified brake fluid: DOT 3 or DOT 4**

### MASTER CYLINDER AIR BLEEDING

If there is no brake fluid in the master cylinder, bleed air from the master cylinder by the following procedure.
(1) Supply brake fluid to the reservoir tank.
(2) Depress and hold the brake pedal.
(3) Another person should then plug the outlet of the master cylinder with a finger.
(4) In the condition in step (3), release the brake pedal.
(5) Repeat steps (2) to (4) three or four times so as to supply brake fluid inside the master cylinder.

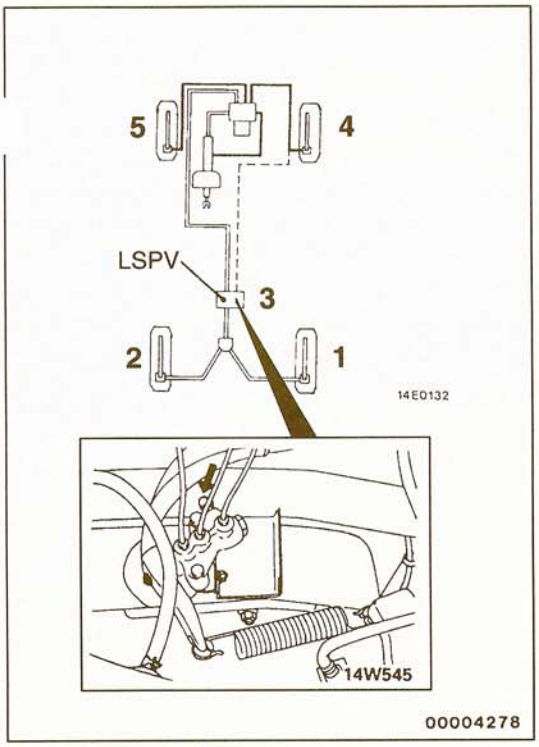


## BRAKE PIPE LINE AIR BLEEDING

Bleed the brake system in the sequence shown in the illustration.
Furthermore, for vehicles with ABS, start the engine before bleeding the air.

**Caution**
**When supplying brake fluid for vehicles with ABS, the filter should be installed to the master cylinder reserve tank.**

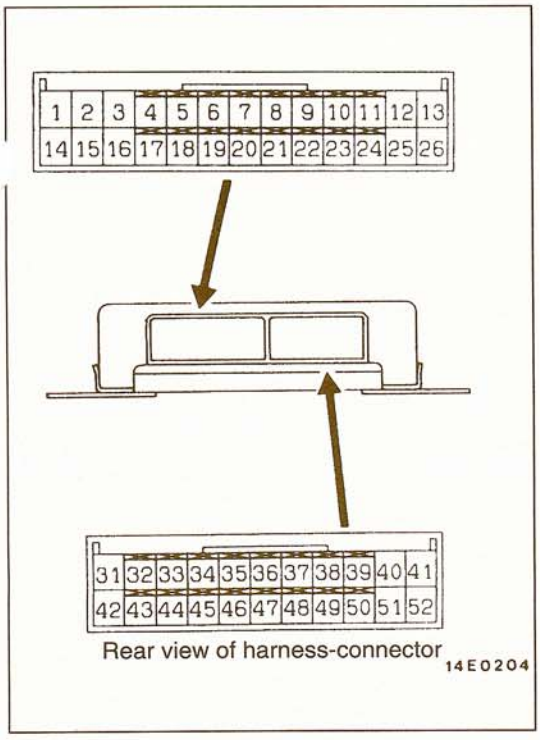


## WHEEL SPEED SENSOR OUTPUT VOLTAGE MEASUREMENT

35200160088

1. Check that the clearance between the wheel speed sensor and the rotor is within the standard value.
2. Raise up the wheels and release the parking brake.
3. Disconnect the ABS-ECU connector and inspect the connector at the harness side.

   **Caution**
   **Be sure to remove the connector double lock and insert the probe into the harness side. Inserting it into the terminal side will result in a bad connection.**

4. Rotate the wheel by hand to be measured at approximately 1/2–1 rotations per second and check the output voltage using a voltmeter (AC mV range) or an oscilloscope.

**<Terminal No.>**

| Polarity | Front L.H. | Front R.H. | Rear L.H. | Rear R.H. |
|---|---|---|---|---|
| + | 7 | 10 | 9 | 8 |
| – | 20 | 23 | 22 | 21 |

**Output voltage:**
**When measuring with a voltmeter: 70 mV or more**
**When measuring with an oscilloscope: 200 mVp-p or more**

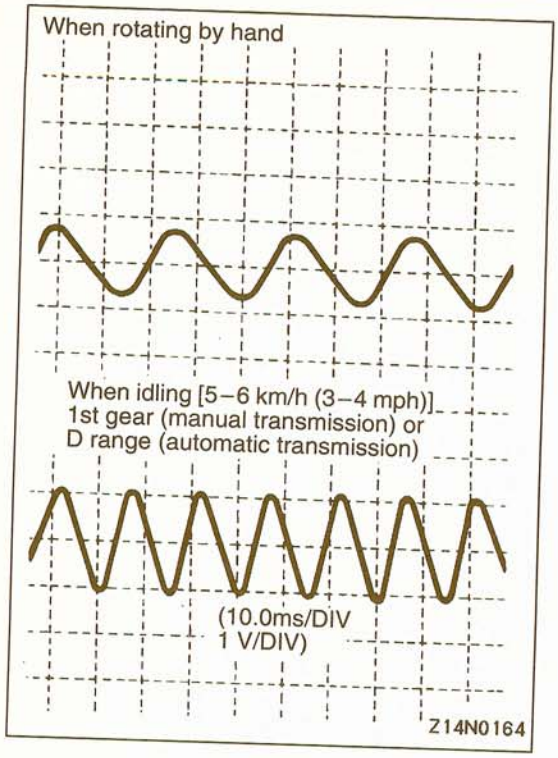


5. If the output voltage is lower than the above values, the reason could be as follows:
   - Excessive clearance between the wheel speed sensor pole piece and the rotor
   - Malfunction of wheel speed sensor

   Adjust the wheel speed sensor or replace if necessary.
6. Next, to observe the output of the wheel speed sensors, move the transfer shift lever to the "4H" position, and the transmission control lever to the "1" (M/T vehicles) or "D" position (A/T vehicles), and rotate the wheels.

NOTE
1. Check the connection of the sensor harness and connector before using the oscilloscope.
2. The wave form measurements can also be taken while the vehicle is actually moving.
3. The output voltage will be small when the wheel speed is low, and similarly it will be large when the wheel speed is high.

## WAVE OBSERVATION POINTS

| Trouble Symptom | Cause | Suggested remedy |
|---|---|---|
| Wave amplitude is too small, or doesn't appear at all | Malfunction of wheel speed sensor | Replace the sensor. |
| | Wrong clearance between the pole piece and rotor | Adjust the clearance. |
| Excessive variation in the wave amplitude (However, if the lowest amplitude occurs at 200 mVp-p, there is no problem.) | Excessive runout or eccentricity in the axle hub | Replace the hub. |
| Noise or interference in the wave pattern | Open circuit in the sensor | Replace the sensor. |
| | Open circuit in the harness | Repair the harness. |
| | Incorrect wheel speed sensor installation | Install the sensor correctly. |
| | Eccentric rotor or broken rotor teeth | Replace the rotor. |

NOTE
As the wheel speed sensor harness moves in conjunction with the movement of the front and rear suspension, the wires might break while driving on rough roads, but may have continuity while driving on normal roads. Accordingly, when measuring the wave pattern of the wheel speed sensor output voltage, shake the sensor harness to simulate the special conditions of a rough road.

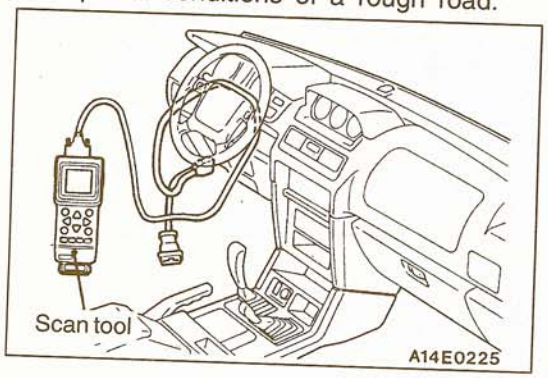


## HYDRAULIC UNIT CHECK

35200170098

1. Jack up the vehicle and support it on axle stands.
2. Release the parking brake and feel the drag force (drag torque) on each wheel brake.
3. Connect the scan tool to the data link connector.

**Caution**
**Turn the ignition switch off before connecting or disconnecting the scan tool.**

4. After checking that the selector lever is in neutral, start the engine.

   **Caution**
   **At this time, check that the ABS warning light illuminates for a brief period before turning off. If it doesn't turn off, refer to ANTI-LOCK BRAKING SYSTEM TROUBLESHOOTING on P.35C-16.**

5. Depress the brake pedal to lock the wheels.
6. Select the item number on the scan tool actuator test for the wheel to be inspected.

| Item No. | Drive object | |
|---|---|---|
| 01 | Front left wheel | Solenoid valve and pump monitor in the hydraulic unit corresponding to each wheel at left |
| 02 | Front right wheel | |
| 03 | Rear wheels | |

7. Use the scan tool to force-drive the actuator, and turn the wheel by hand to check the change in braking force when the brake pedal is depressed.
   The result should be as shown in the following illustration.

   NOTE
   1. When the scan tool is used and the ABS system is selected, the ABS system will switch to scan tool mode and the ABS warning light will illuminate.
   2. When the ABS function has been interrupted by the fail-safe, the scan tool actuator testing cannot be used.

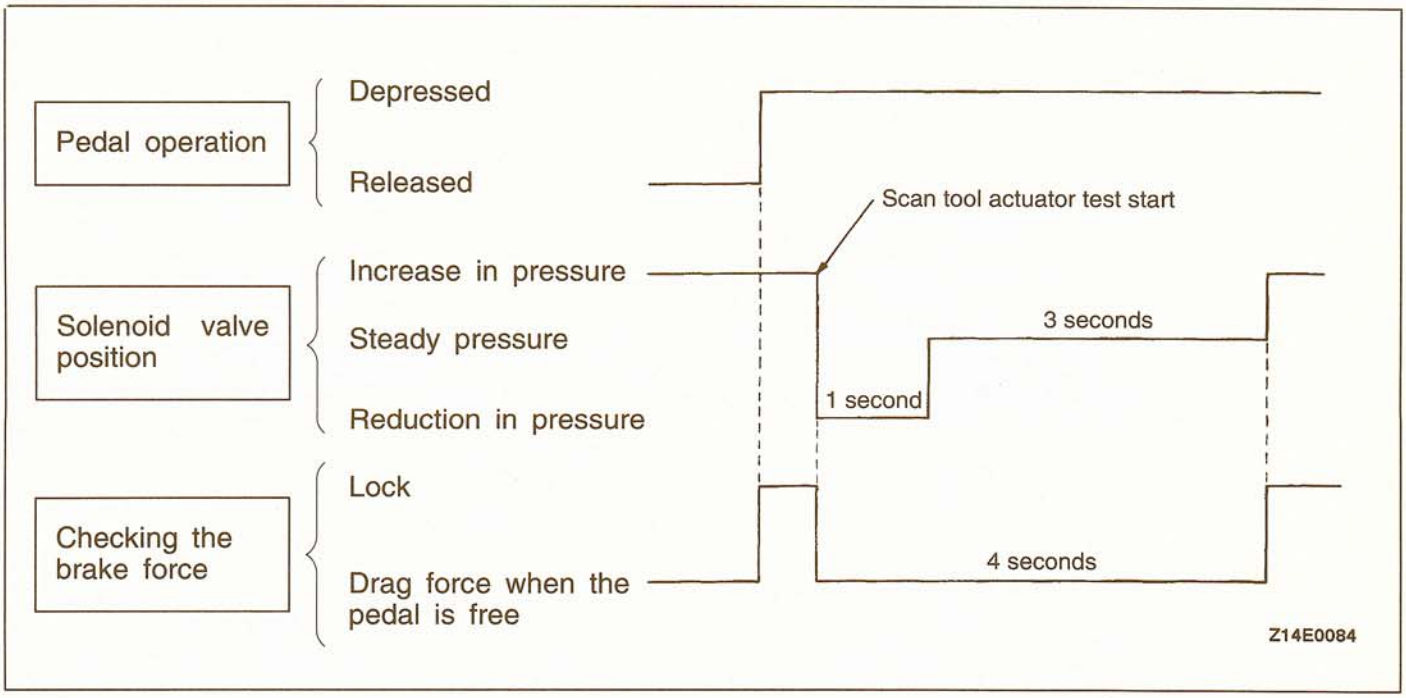


8. If a different result is obtained when checking, correct it by following the procedure in the "Diagnostic Table for Simple Inspection" below.

### Diagnostic Table for Simple Inspection

| Diagnostic | | Cause and remedy | |
|---|---|---|---|
| Normal | Problem | Cause | Suggested remedy |
| After locking for a 4-second period, the braking force will release. | The wheel will not lock even when the pedal is depressed. | Blockage in the brake line outside the hydraulic unit | Inspect the brake line and clean |
| | | Blockage in the oil pressure circuit in the hydraulic unit | Replace the hydraulic unit. |
| | Braking force does not release. | Hydraulic unit brake pipes are incorrectly connected | Connect correctly |
| | | Malfunction of hydraulic unit solenoid valve | Replace the hydraulic unit. |

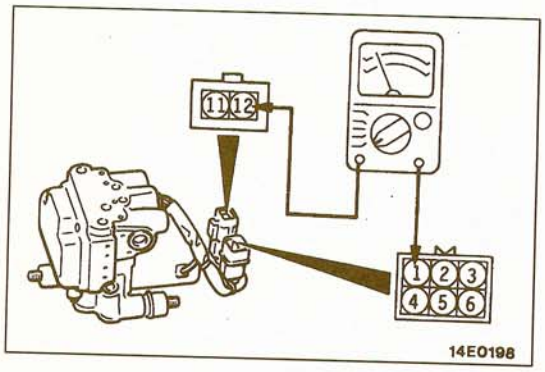


## SOLENOID VALVE CHECK

35201070069

Measure the resistance between terminals

**Standard value:**

| Solenoid | Measurement Terminals | Resistance Between Terminals |
|---|---|---|
| To front wheel cylinder (right side) | 12–4 | 4.7 ± 0.25 Ω |
| To front wheel cylinder (left side) | 12–5 | |
| To rear wheel cylinder | 12–6 | |
| From front wheel cylinder (right side) | 12–1 | 9.0 ± 0.5 Ω |
| From front wheel cylinder (left side) | 12–2 | |
| From rear wheel cylinder | 12–3 | |

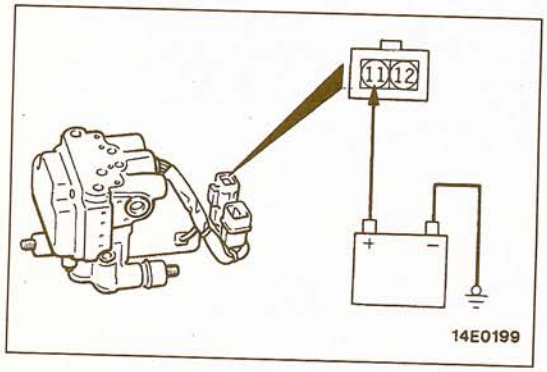


## MOTOR OPERATION CHECK

35200180060

Connect the battery and check to be sure that the sound of the hydraulic unit motor operating can be heard.

**Caution**
**The battery power should not be applied for more than 1 second.**

TSB Revision

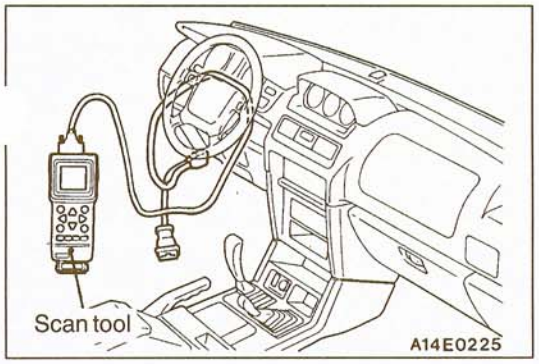


## G-SENSOR OUTPUT VOLTAGE CHECK 35200190018

1. Unload the vehicle and move it to a horizontal surface.
2. Connect the scan tool to the data link connector.

   **Caution**
   **Turn the ignition switch off before connecting or disconnecting the scan tool.**

3. Start the engine.

   **Caution**
   **At this time, check to be sure that the ABS warning light illuminates for a brief period before turning off. If it does not turn off, refer to ANTI-LOCK BRAKING SYSTEM TROUBLESHOOTING on P.35C-16.**

4. Check that the G sensor output voltage is within the standard value range.

   **Standard value: 2.5 ± 0.12 V**

5. If the G sensor output voltage is not within the standard value range, check the installation condition of the G sensor. If there is a loose bolt, deformation of the G sensor bracket, etc., carry out a repair. If the problem is not repairable, replace the G sensor.

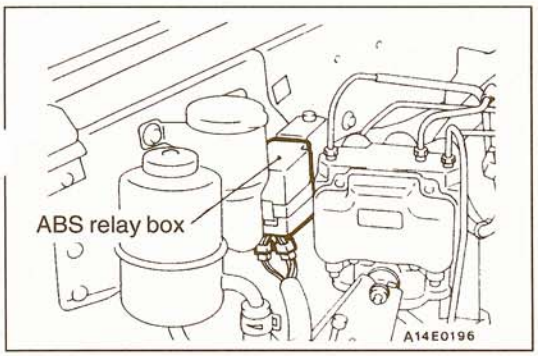


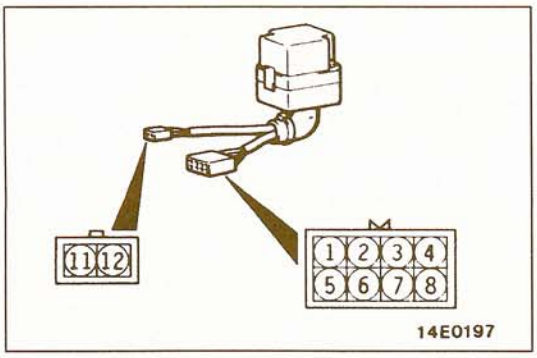


## ABS RELAY BOX (WITH BUILT-IN MOTOR RELAY AND VALVE RELAY) CHECK 35201210010

Disconnect the ABS relay box connector and check the continuity between the terminals of the ABS relay box-side connector when current is flowing and when current is not flowing.

| | | |
|---|---|---|
| When no current flows | Between terminals (7) – (4) | 30–60 Ω |
| | Between terminals (7) – (8) | 60–120 Ω |
| | Between terminals (11) – (12) | No continuity (Infinite resistance) |
| | Between terminals (6) – (1) | No continuity (Infinite resistance) |
| | Between terminals (5) – (2) | Continuity (approx. 0 Ω) |
| When current flows between terminals (7) – (4) | Between terminals (11) – (12) | Continuity (approx. 0 Ω) |
| When current flows between terminals (7) – (8) | Between terminals (5) – (2) | No continuity (Infinite resistance) |
| | Between terminals (6) – (1) | Continuity (approx. 0 Ω) |

# BRAKE LINE

35201040015

## REMOVAL AND INSTALLATION

**Pre-removal Operation**
- Brake Fluid Draining

**Post-installation Operation**
- Brake Fluid Supplying
- Bleeding (Refer to P.35C-24.)

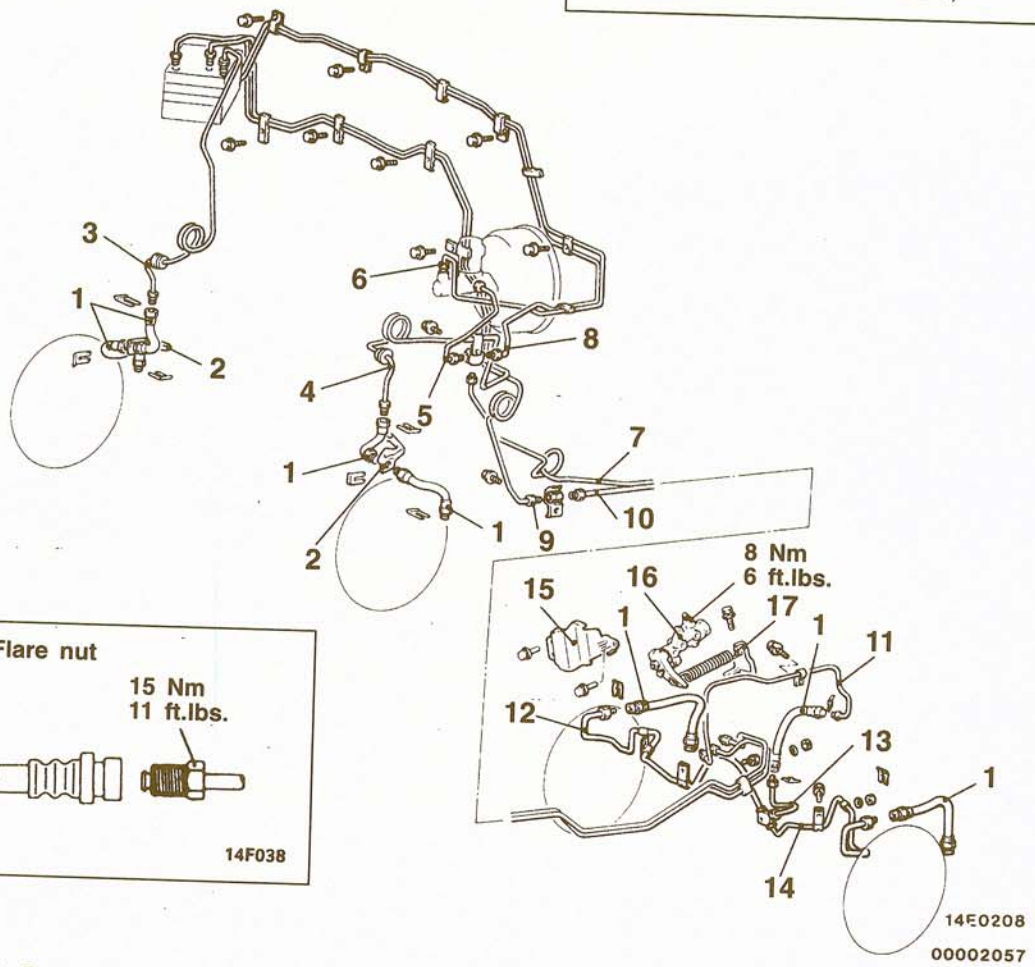





1. Brake hose
2. Brake hose support
3. ▶A◀ Brake pipe (front, R.H.)
4. ▶A◀ Brake pipe (front, L.H.)
5. Brake pipe (A)
6. ▶A◀ Brake pipe (B)
7. Brake pipe (floor)
8. ▶A◀ Brake pipe (floor 1)
9. ▶A◀ Brake pipe (main 1)
10. Brake pipe (main 2)
11. Brake pipe (main 3)
12. Brake pipe (rear, R.H.)
13. Brake pipe (rear, center)
14. Brake pipe (rear, L.H.)
15. Protector
16. Load sensing proportioning valve
17. Load sensing spring

**Caution**
**Do not disassemble the load sensing proportioning valve because its performance depends on the set load of the spring.**

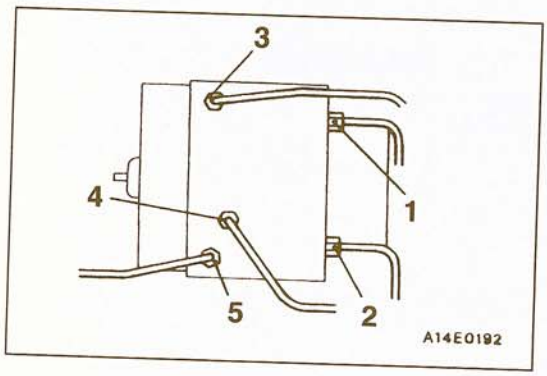


## INSTALLATION SERVICE POINT

### ▶A◀ BRAKE PIPES TO HYDRAULIC UNIT INSTALLATION

Install the brake pipes as shown in the illustration.
1. From master cylinder to hydraulic unit (to the rear brake)
2. From master cylinder to hydraulic unit (to the front brake)
3. From hydraulic unit to rear brake
4. From hydraulic unit to front brake (LH)
5. From hydraulic unit to front brake (RH)

**TSB Revision**

# HYDRAULIC UNIT

35200860087

## REMOVAL AND INSTALLATION

**Pre-removal Operation**
- Brake Fluid Draining

**Post-installation Operation**
- Brake Fluid Supplying
- Bleeding (Refer to P.35C-24.)
- Checking by Using the Scan Tool (Refer to P.35C-26.)

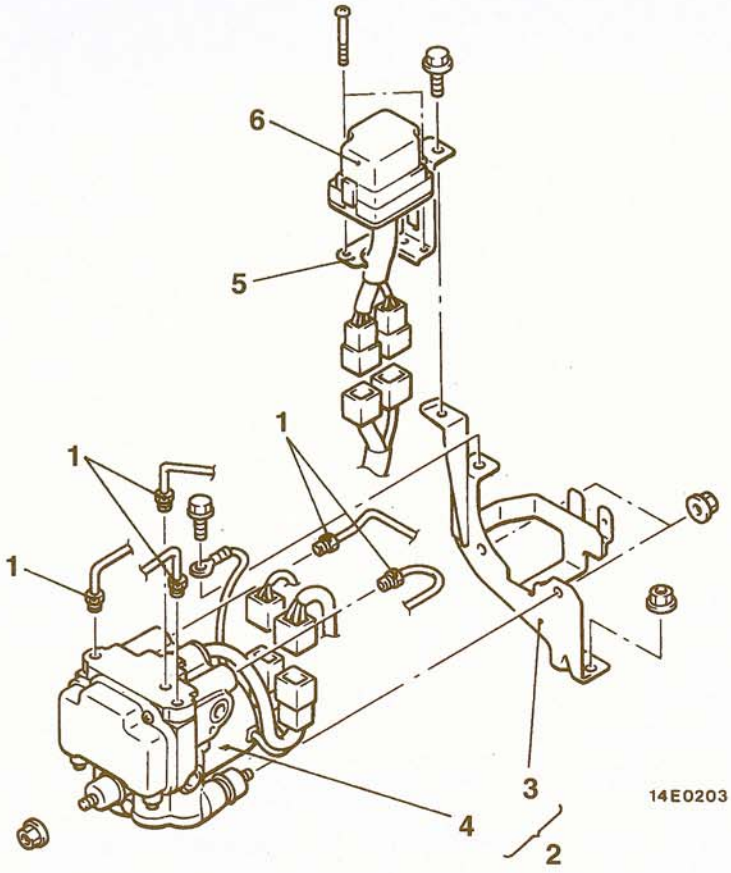


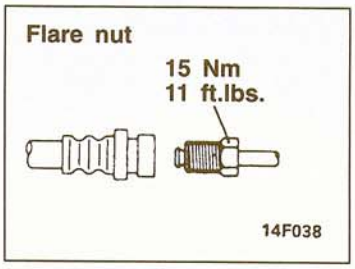


00004073

**Removal steps**
1. Brake tube connection
2. Hydraulic unit assembly
3. Hydraulic unit bracket

◀A▶

4. Hydraulic unit
5. Relay box bracket
6. ABS relay box

## REMOVAL SERVICE POINT

### ◀A▶ HYDRAULIC UNIT REMOVAL

**Caution**
1. **The hydraulic unit is heavy, and so care should be taken when removing it.**
2. **The hydraulic unit is not to be disassembled; its nuts and bolts should absolutely not be loosened.**
3. **The hydraulic unit must not be dropped or otherwise subjected to shocks.**
4. **The hydraulic unit must not be turned upside down or laid on its side.**

**TSB Revision**

# G SENSOR

## REMOVAL AND INSTALLATION

35201010030

**Pre-removal and Post-installation Operation**
- Floor Console Removal and Installation (Refer to GROUP 52A – Floor Console.)

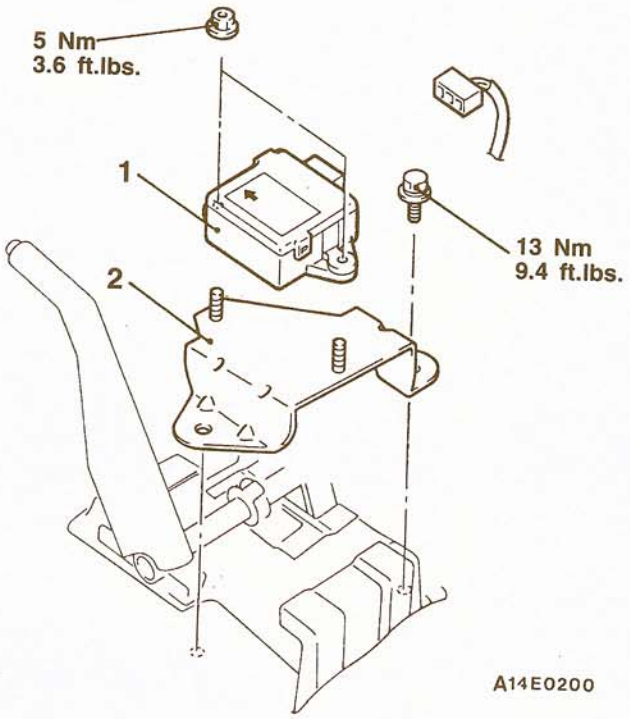


**Removal steps**
1. G sensor
2. G sensor bracket

**Caution**
**When removing the G sensor, take care not to drop it or subject it to severe impact.**

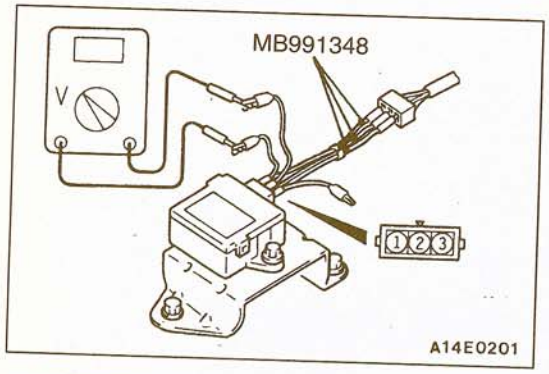


## INSPECTION

35201020026

(1) Disconnect the G-sensor connector and connect the special tool between the terminal of the disconnected connector.

(2) Turn the ignition switch to ON and take a reading of the following output voltage.
Between terminals (2) and (3)

**Standard value: 2.5 ± 0.12 V**

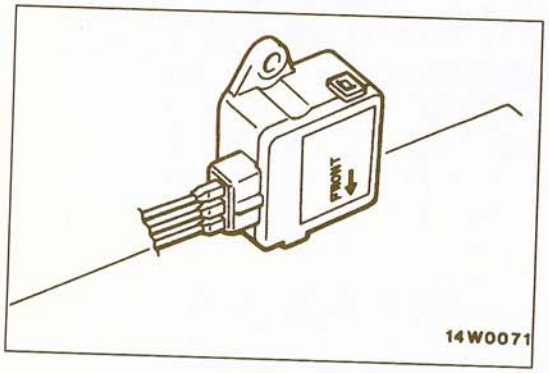


(3) With the special tool still connected, secure the G-sensor so that the FRONT mark on the sensor mounting surface is facing straight down, and then take a reading of the following output voltage.
Between terminals (2) and (3)

**Standard value: 3.4 – 3.6 V**

(4) If the voltage is outside the standard value, after checking to be sure that there is no abnormality in the power supply and earth wires, replace the G-sensor.

**TSB Revision**

# WHEEL SPEED SENSOR

35200830071

## REMOVAL AND INSTALLATION

**Post-installation Operation**
- Anti-Lock Braking System Checking (Refer to P.35C-25)

**Front-RH**

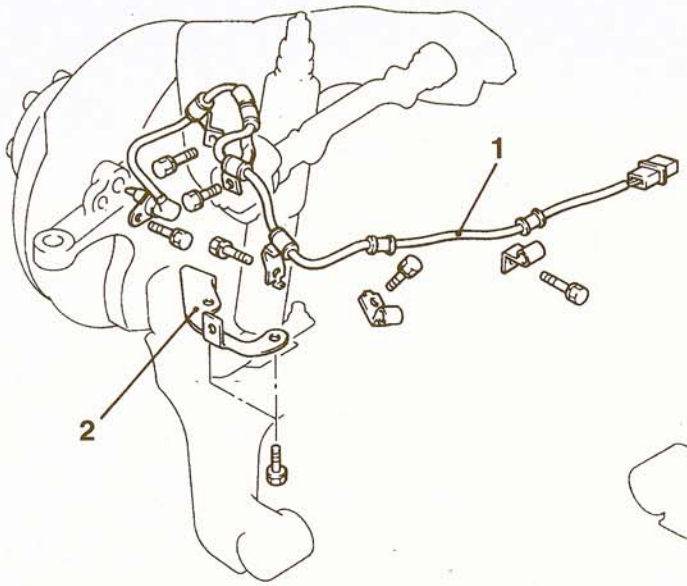


**Front-LH**

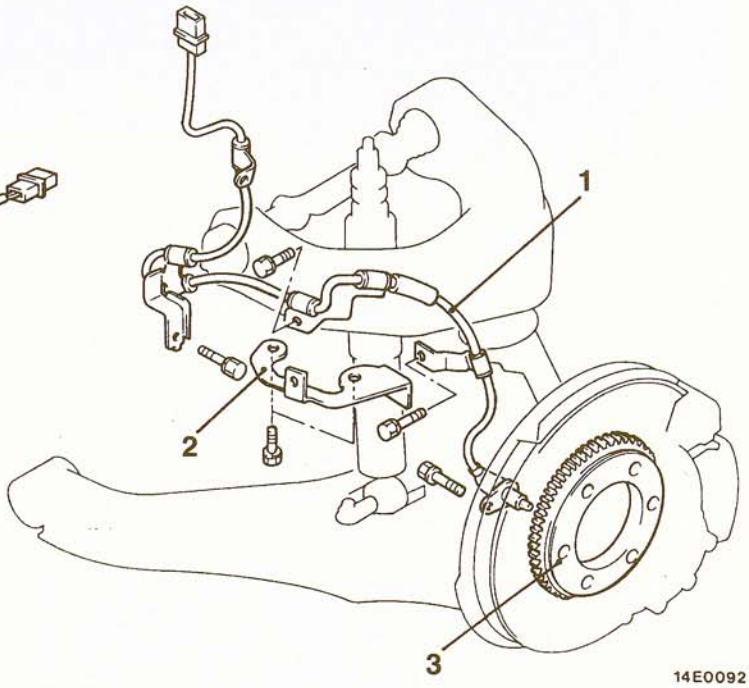


14E0092

**Rear**

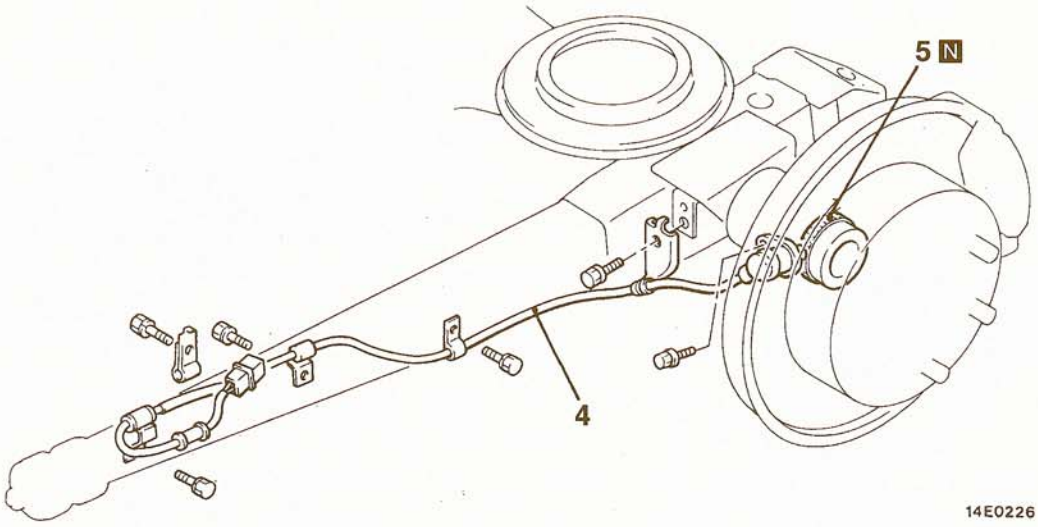


14E0226

00004074

**Front speed sensor removal steps**

◀A▶ ▶A◀ 1. Front speed sensor
2. Harness bracket
3. Front rotor
(Refer to GROUP 26 – Axle Hub.)

**Rear speed sensor removal steps**

◀A▶ 4. Rear speed sensor
5. Rear rotor
(Refer to GROUP 27 – Axle shaft.)

**TSB Revision**

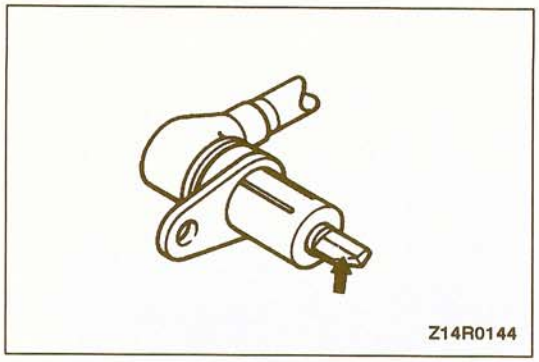
Z14R0144

## REMOVAL SERVICE POINTS

### ◀A▶ FRONT SPEED SENSOR/REAR SPEED SENSOR REMOVAL

**Caution**
**Be careful when handling the pole piece at the tip of the speed sensor and the toothed edge of the rotor so as not to damage them by striking against other parts.**

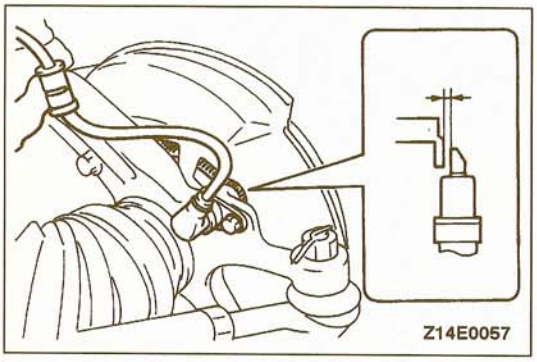
Z14E0057

## INSTALLATION SERVICE POINT

### ▶A◀ FRONT SPEED SENSOR INSTALLATION

Insert a feeler gage into the space between the speed sensor's pole piece and the rotor's toothed surface, and check to be sure that the clearance at all points is at the standard value.

**Standard value: 0.2–1.0 mm (.008–.039 in.)**

NOTE
If the clearance between the speed sensor's pole piece and the rotor's toothed surface is not within the standard value range, it is probable that the rotor is incorrectly installed, so re-check installation.

## INSPECTION

35200840074

### SPEED SENSOR

(1) Check whether any metallic foreign material has adhered to the pole piece at the speed sensor tip, and, if so, remove it.
Also check whether the pole piece is damaged, and, if so, replace it with a new one.

NOTE
The pole piece can become magnetized because of the magnet built into the speed sensor, so that metallic foreign material easily adheres to it. Moreover, the pole piece may not be able to sense correctly the wheel rotation speed if it is damaged.

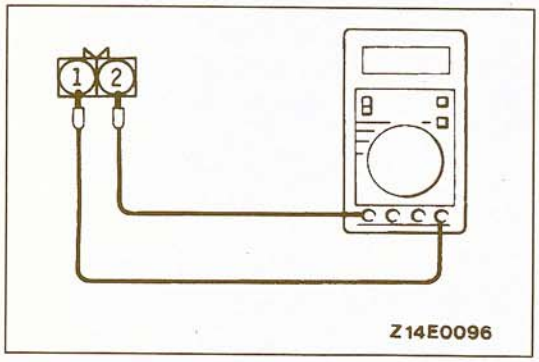

Z14E0096

(2) Measure the resistance between the speed sensor terminals.

**Standard value:**
**Front: 1.4–1.8 kΩ**
**Rear: 1.3–1.5 kΩ**

If the internal resistance of the speed sensor is not within the standard value, replace it with a new speed sensor.

TSB Revision

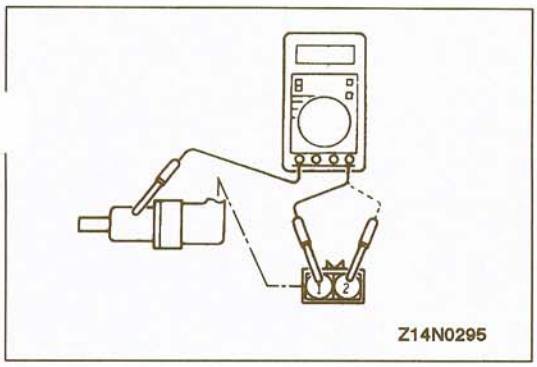


(3) Remove all connections from the speed sensor, and then measure the resistance between terminals (1) and (2) and the body of the speed sensor.

**Standard value: 100 kΩ or more**

If the speed sensor insulation resistance is outside the standard value range, replace with a new speed sensor.

(4) Check the speed sensor cable for breakage, damage or disconnection; replace with a new one if a problem is found.

NOTE
When checking for cable damage, remove the cable clamp part from the body and then bend and pull the cable near the clamp.

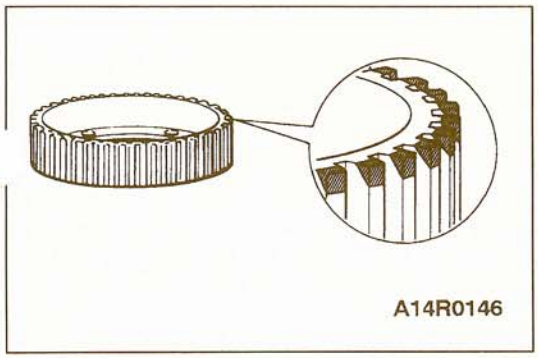


**TOOTHED ROTOR**

Check whether the rotor teeth are broken or deformed, and, if so, replace the rotor.

# ELECTRONIC CONTROL UNIT

35200980066

## REMOVAL AND INSTALLATION

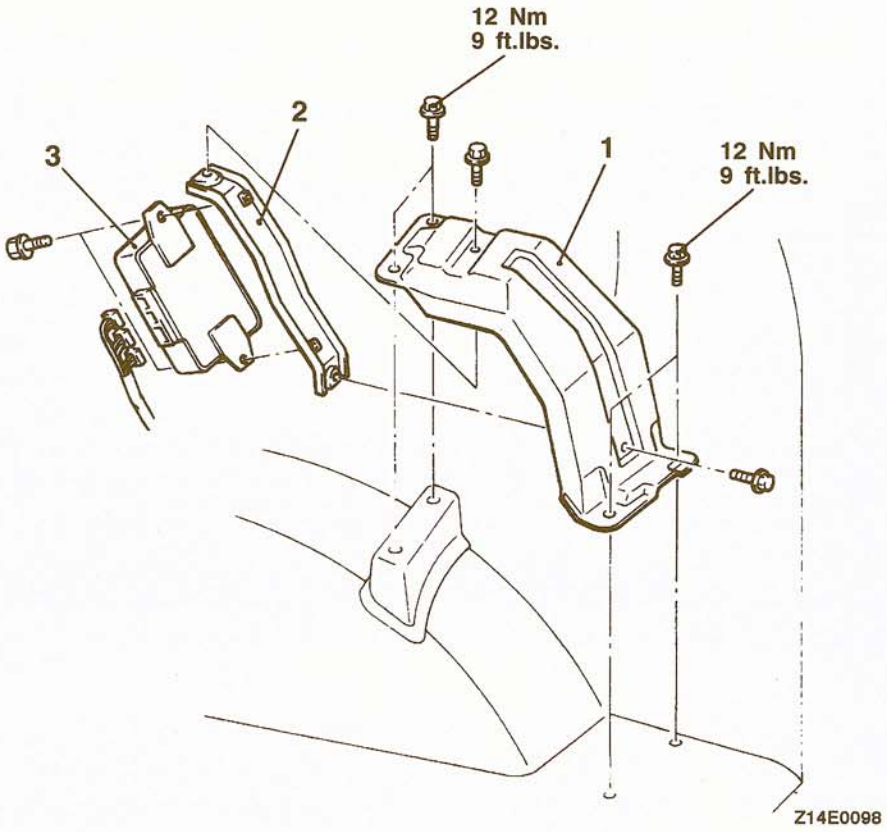


**Removal steps**

- Third seat
  <Vehicles with optional third seat>
  (Refer to GROUP 52A – Third seat.)
- Quarter trim, lower
  (Refer to GROUP 52A – Trim.)

1. Bracket (A)
2. Bracket
3. Electronic control unit

# PARKING BRAKES

## CONTENTS

36109000057


**LUBRICANTS** ..... 2

**ON-VEHICLE SERVICE** ..... 2

- Lining Running-in ..... 3
- Parking Brake Lever Stroke Check and Adjustment ..... 2
- Parking Brake Switch Check ..... 3

**PARKING BRAKE CABLE** ..... 5

**PARKING BRAKE DRUM** ..... 7

**PARKING BRAKE LEVER** ..... 4

**SEALANTS** ..... 2

**SERVICE SPECIFICATIONS** ..... 2

**TROUBLESHOOTING** ..... 2

## SERVICE SPECIFICATIONS

36100030055

| Items | Standard value | Limit |
|---|---|---|
| Parking brake lever stroke | 4–6 notches | – |
| Lining thickness mm (in.) | 6.5 (.256) | 4.5 (.177) |
| Brake drum inside diameter mm (in.) | 197 (7.756) | 198 (7.795) |

## LUBRICANTS

36100040058

| Items | Specified lubricant |
|---|---|
| Backing plate | Brake grease SAE J310, NLGI No. 1 |
| Shoe and lining assembly | |
| Adjuster | |

## SEALANTS

36100050013

| Items | Specifications |
|---|---|
| Both sides of sealer | 3M ATD Part No. 8661, 8663 or equivalent |
| Shoe hold-down pin | 3M ATD Part No. 8513 or equivalent |
| Backing plate | |

## TROUBLESHOOTING

36100070033

| Trouble Symptom | Probable Cause | Remedy |
|---|---|---|
| Brake drag | Incomplete release of parking brake | Correct |
| | Incorrect parking brake adjustment | Adjust |
| Insufficient parking brake function | Worn brake lining | Replace |
| | Excessive parking brake lever stroke | Adjust the parking brake lever stroke or check the parking brake cable routing |
| | Grease or oil on lining surface | Replace |
| | Parking brake cable sticking | Replace |

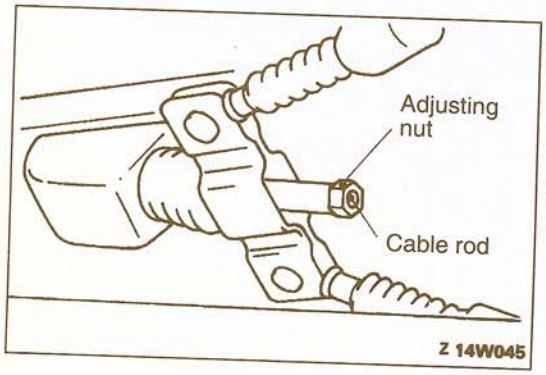


## ON-VEHICLE SERVICE

36100090053

### PARKING BRAKE LEVER STROKE CHECK AND ADJUSTMENT

**Standard value: 4–6 notches**

If the parking brake lever stroke is not within the standard value range, make adjustment by the following procedures.
(1) Loosen the adjuster to slacken the parking brake cable.

TSB Revision

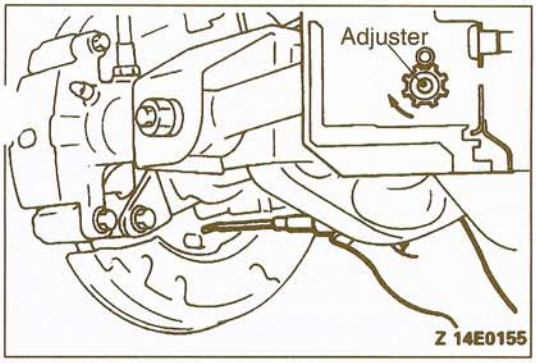


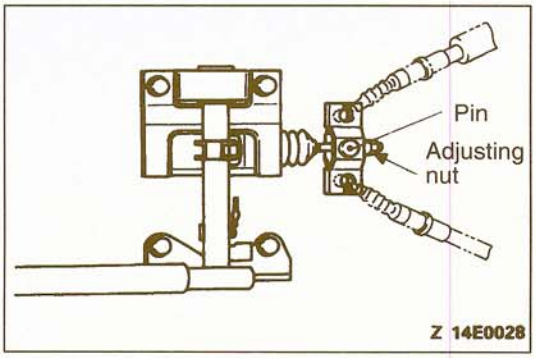


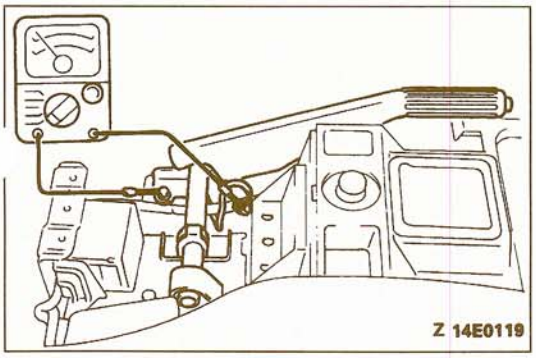


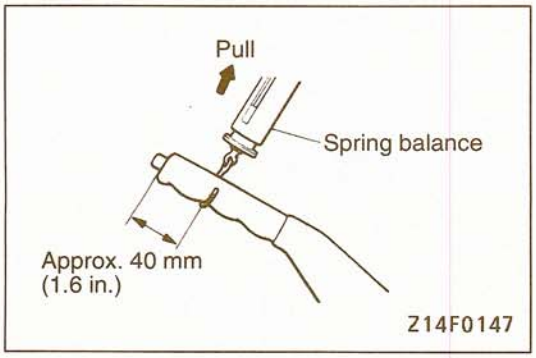


(2) Remove the adjustment hole plug, and then use a flat-tip (–) screwdriver to turn the adjuster in the direction of the arrow (the direction which expands the shoe) so that the disc will not rotate.
(3) Return the adjuster 3–4 notches in the direction opposite to the direction of the arrow.
(4) Turn the adjusting nut to adjust the parking brake lever stroke to within the standard value range.

**Caution**
**If the number of brake lever notches engaged is less than the standard value, the cable has been pulled excessively. Be sure to adjust it to within the standard value.**

(5) After making the adjustment, check that there is no play between the adjusting nut and the pin. Also check that the adjusting nut is securely held at the nut holder.
(6) After adjusting the lever stroke, jack up the rear of the vehicle.
(7) With the parking brake lever in the released position, turn the rear wheel to confirm that the rear brakes are not dragging.

## PARKING BRAKE SWITCH CHECK 36100330056

(1) Disconnect the connector of the parking brake switch, and connect an ohmmeter to the parking brake switch and the switch installation bolt.
(2) The parking brake switch is good if there is continuity when the parking brake lever is pulled and there is no continuity when it is returned.

## LINING RUNNING-IN 36100110032

Carry out running-in by the following procedure when replacing the parking brake linings or the rear brake disc rotors, or when brake performance is insufficient.
(1) Adjust the parking brake stroke to the specified value.
(2) Hook a spring scale onto the center of the parking brake lever grip and pull it with a force of 98–147 N (22–33 lbs.) in a direction perpendicular to the handle.
(3) Drive the vehicle at a constant speed of 35–50 km/h (22–31 mph) for 100 meters (328 ft).
(4) Release the parking brake and let the brakes cool for 5–10 minutes.
(5) Repeat the procedure in steps (2) to (4) 4–5 times.

**Caution**
**Carry out running-in in a place with good visibility, and pay careful attention to safety.**

# PARKING BRAKE LEVER

## REMOVAL AND INSTALLATION

36100130052

**Pre-removal Operation**
- Floor Console Assembly Removal (Refer to GROUP 52A – Floor Console.)

**Post-installation Operation**
- Parking Brake Lever Stroke Adjustment (Refer to P.36-2.)
- Floor Console Assembly Installation (Refer to GROUP 52A – Floor Console.)

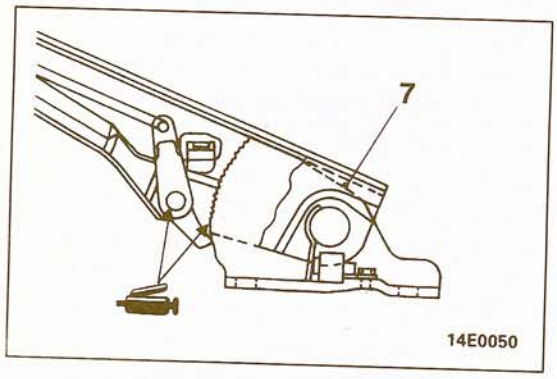


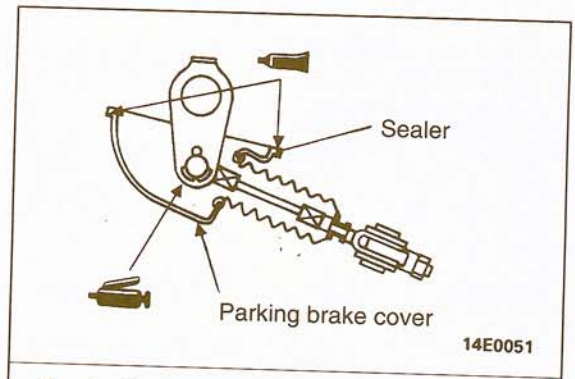


**Sealant:**
**3M ATD Part No. 8661, 8663 or equivalent**

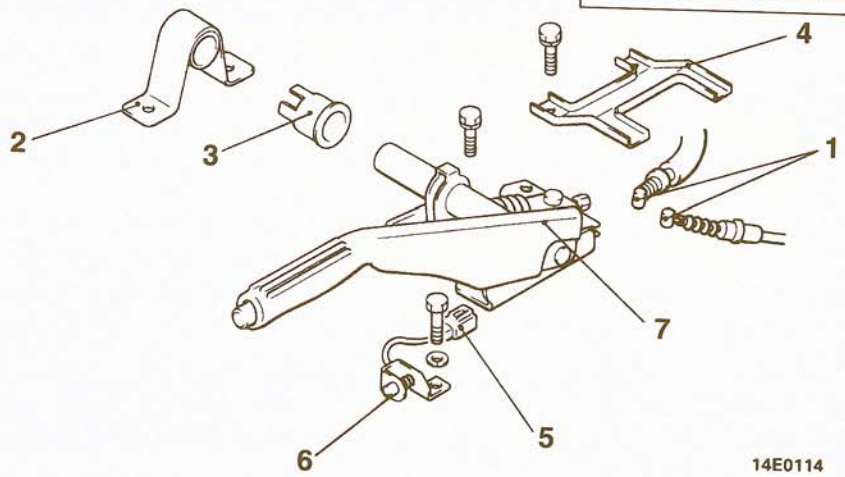


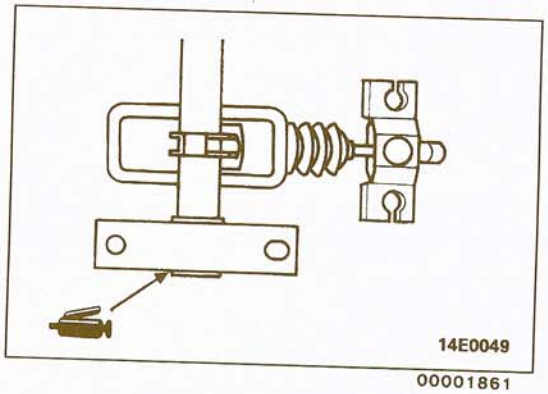


00001861

**Removal steps**
1. Parking brake cable connection
2. Parking brake stay
3. Bushing
4. Parking brake shaft cover
5. Parking brake switch connector
6. Parking brake switch
7. Parking brake lever

**TSB Revision**

# PARKING BRAKE CABLE

36100190074

## REMOVAL AND INSTALLATION

**Post-installation Operation**
- Parking Brake Lever Stroke Adjustment (Refer to P.36-2.)

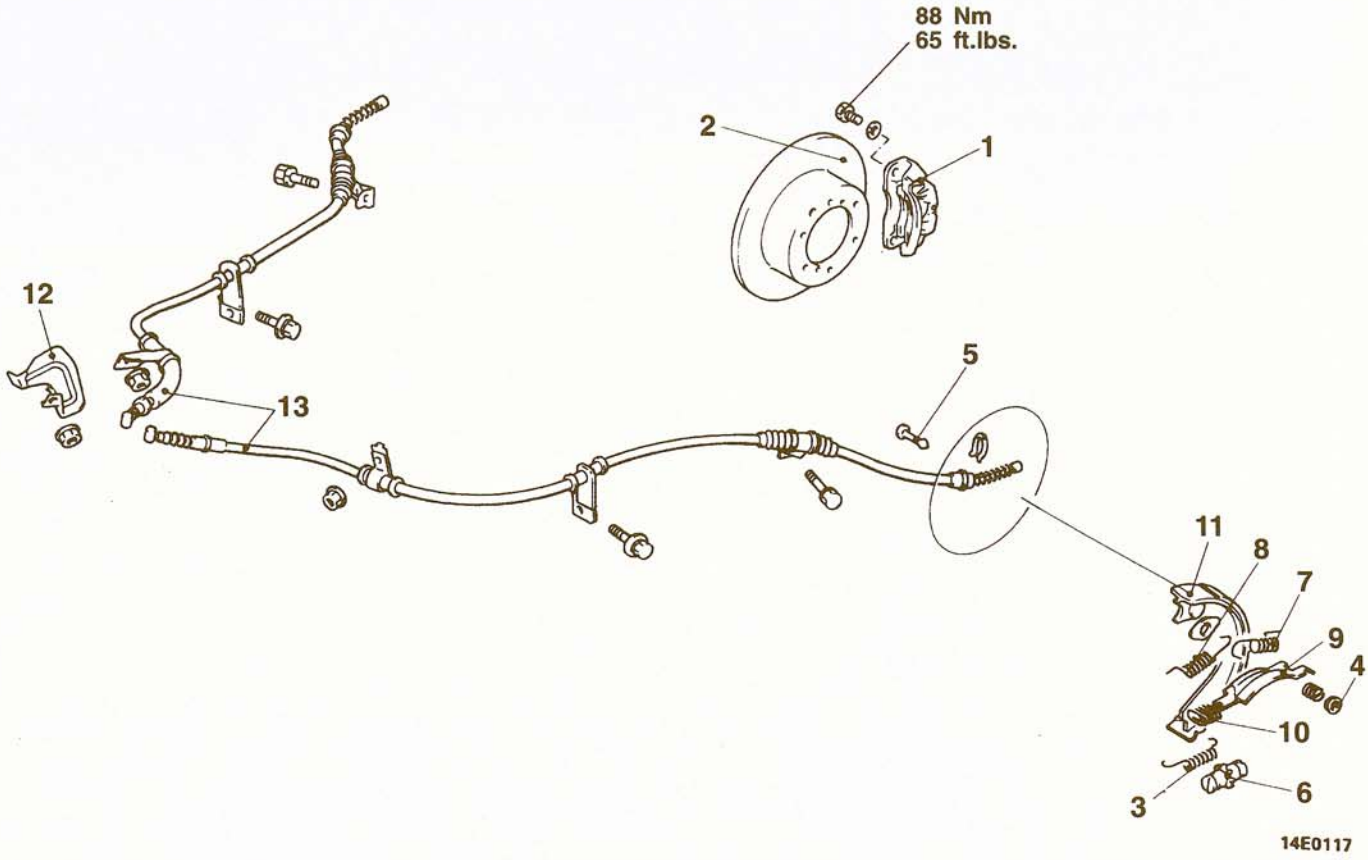


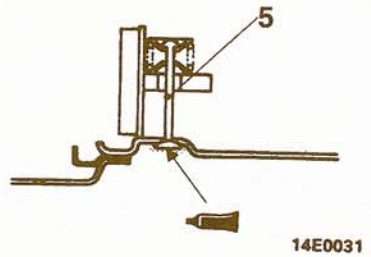


**Sealant:**
**3M ATD Part No. 8513 or equivalent**

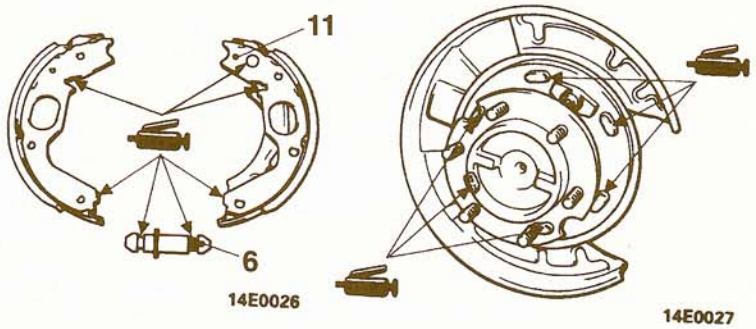


**Brake grease: Brake grease SAE J310, NLGI No. 1**

00001862

**Removal steps**

1. Rear brake assembly
2. Rear brake disc
3. Adjusting wheel spring
4. Shoe hold-down cup
5. Shoe hold-down pin
- ▶B◀ 6. Adjuster
- ▶A◀ 7. Anchor to shoe spring
- ▶A◀ 8. Anchor to shoe spring
9. Strut
10. Strut to shoe spring
11. Shoe and lining assembly
12. Heat protector
13. Parking brake cable

**TSB Revision**

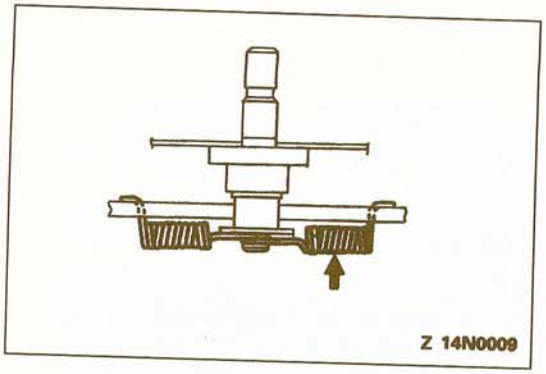


## INSTALLATION SERVICE POINTS

### ▶A◀ ANCHOR TO SHOE SPRING INSTALLATION

The load on the respective anchor to shoe springs is differer so the spring indicated by the arrow has been painted fo. identification.

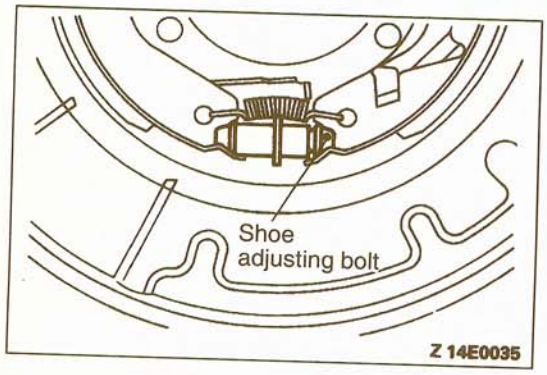


### ▶B◀ ADJUSTER INSTALLATION

Install the adjuster so that the shoe adjusting bolt for the left-hand wheel is towards the rear of the vehicle, and the shoe adjusting bolt for the right-hand wheel is towards the front of the vehicle.

# PARKING BRAKE DRUM

36100250048

## REMOVAL AND INSTALLATION

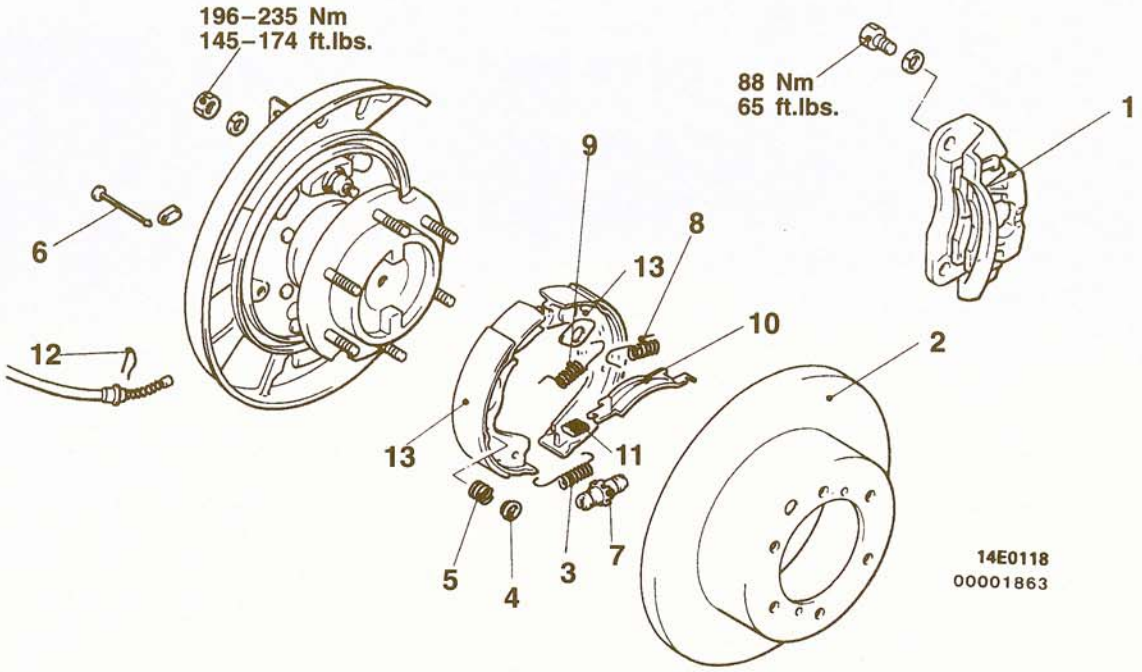


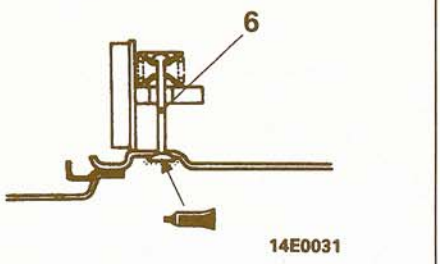


**Sealant:**
**3M ATD Part No. 8513 or equivalent**

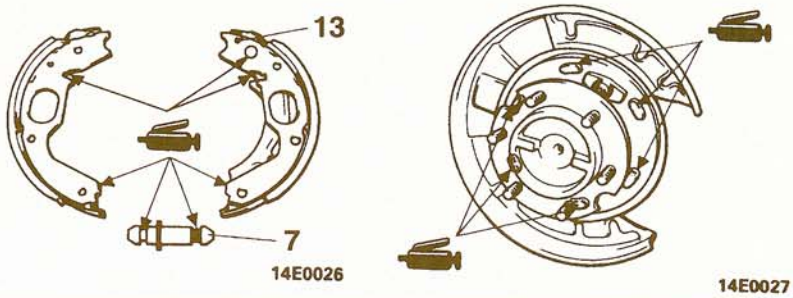


**Brake grease: Brake grease SAE J310, NLGI No. 1**

**Removal steps**

1. Rear brake assembly
2. Rear brake disc
3. Adjusting wheel spring
4. Shoe hold-down cup
5. Shoe hold-down spring
6. Shoe hold-down pin
- ▶B◀ 7. Adjuster
- ▶A◀ 8. Anchor to shoe spring
- ▶A◀ 9. Anchor to shoe spring
10. Strut
11. Strut to shoe spring
12. Clip
13. Shoe and lining assembly

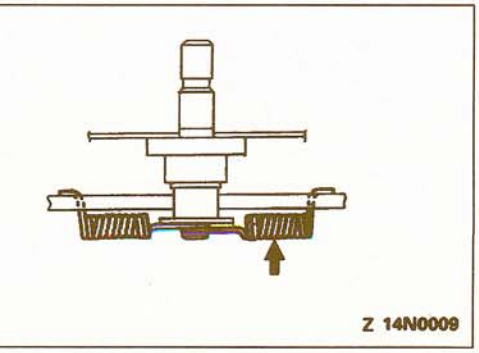


## INSTALLATION SERVICE POINTS

### ▶A◀ ANCHOR TO SHOE SPRING INSTALLATION

The load on the respective anchor to shoe springs is different, so the spring indicated by the arrow has been painted for identification.

**TSB Revision**

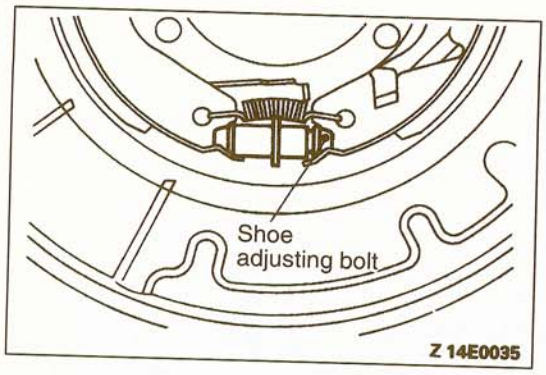


### ▶B◀ ADJUSTER INSTALLATION

Install the adjuster so that the shoe adjusting bolt for the left-hand wheel is towards the rear of the vehicle, and the shoe adjusting bolt for the right-hand wheel is towards th front of the vehicle.

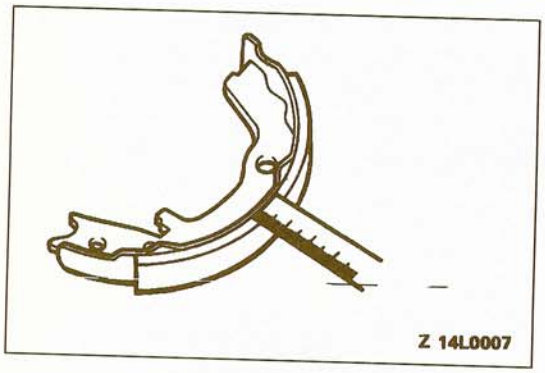


## INSPECTION

36100260034

### UNUSUAL WEAR OF THE BRAKE LINING AND BRAKE DRUM

(1) Measure the thickness of the brake lining at several places.

**Standard value: 6.5 mm (.256 in.)**

**Limit: 4.5 mm (.177 in.)**

**Caution**
**Replace the brake shoes if the thickness of the brake lining is the limit value or less.**

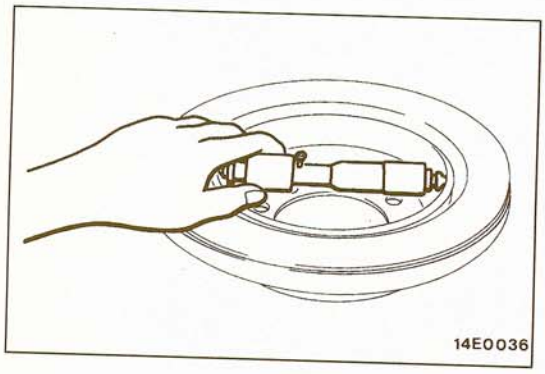


(2) Measure the brake disc drum inner diameter at two or more places.

**Standard value: 197 mm (7.756 in.)**

**Limit: 198 mm (7.795 in.)**

**Caution**
**Replace if the brake disc drum inner diameter is the limit value or more.**

# BODY

## CONTENTS

42109000065


BACK DOOR ASSEMBLY ..... 41

BACK DOOR HANDLE AND LATCH ..... 43

BACK DOOR TRIM AND WATERPROOF FILM ..... 42

BACK DOOR WINDOW GLASS ..... 23

BODY MOUNTING ..... 12

DOOR ASSEMBLY ..... 25

DOOR GLASS AND REGULATOR ..... 30

DOOR HANDLE AND LATCH ..... 33

DOOR TRIM AND WATERPROOF FILM .... 27

FENDER ..... 15

FUEL FILLER DOOR ..... 14

GENERAL SPECIFICATIONS ..... 2

HOOD ..... 13

KEYLESS ENTRY SYSTEM ..... 37

ON-VEHICLE SERVICE ..... 9

- Back Door Adjustment ..... 10
- Door Inside Handle Play Adjustment ..... 10
- Door Outside Handle Play Check ..... 10
- Door Window Glass Adjustment ..... 10
- Front and Rear Door Adjustment ..... 9
- Fuel Filler Door Adjustment ..... 9
- Hood Adjustment ..... 9
- Water Test ..... 11

QUARTER WINDOW GLASS ..... 21

SEALANTS AND ADHESIVES ..... 4

SERVICE SPECIFICATIONS ..... 3

SPECIAL TOOLS ..... 4

SUNROOF ..... 44

TROUBLESHOOTING ..... 5

WINDOW GLASS ..... 16

WINDOW GLASS RUNCHANNEL AND DOOR OPENING WEATHERSTRIP ..... 40

WINDSHIELD ..... 18

# GENERAL SPECIFICATIONS

42100020015

| Items | | | Specifications |
|---|---|---|---|
| Hood | Type | | Rear hinged, front opening type |
| Front door | Construction | | Front hinged, sash construction |
| | Regulator system | | Wire type |
| | Locking system | | Pin-fork type |
| Rear door | Construction | | Front hinged, sash construction |
| | Regulator system | | Wire type |
| | Locking system | | Pin-fork type |
| Back door | Construction | | Right hinged, sash construction |
| | Locking system | | Pin-fork type |
| Glass | Installation method | Windshield glass | Adhesive type |
| | | Back door window glass | Adhesive type |
| | Thickness mm (in.) | Windshield glass | 5.3 (.21) |
| | | Quarter window glass | 4.0 (.16) |
| | | Front door glass | 3.5 (.14) |
| | | Rear door glass | 3.5 (.14) |
| | | Back door window glass | 3.5 (.14) |
| | | Sunroof glass | 5.0 (.20) |
| Frame type | | | Ladder type |
| Power window motor | Type | | Permanent magnet type (built-in circuit breaker) |
| | Revolutions under no load r/m | | 75 or more |
| | Revolutions under load [At 1 Nm (.72 ft.lbs.)] r/m | | 65–95 |
| | Revolutions under load [At 2 Nm (1.45 ft.lbs.)] r/m | | 50–80 |
| | Bound current A | | 34 or less |
| | Direction of rotation | | Clockwise and anti-clockwise |
| Sunroof motor | Type | | DC ferrite (with built-in circuit breaker) |
| | Speed at no load r/m | | 155–195 |
| | Speed at load [At 2 Nm (1.45 ft.lbs.)] r/m | | 110–150 |
| | Bound current A | | 35 or less |
| | Turning direction | | Both clockwise and anti-clockwise |

**TSB Revision**

| Items | | Specifications |
|---|---|---|
| Power window main switch | Type | Automatic reset type |
| | Rated load current (Lock switch) A | 25 |
| | Rated load current (Power window switch) A | 10 |
| Power window sub switch | Type | Automatic reset type |
| | Rate load current A | 10 |
| Power window relay | Maximum contact current A | 20 |
| | Rated coil current A | 0.2 or less |
| | Voltage drop between terminals (At 12 V and the rated load current) V | 0.3 or less |
| Door lock control unit | Effective voltage V | 10–16 |
| | Current consumption (when not in operation) mA | 3 or less |
| Door Lock power relay | Range of voltage used V | 10–16 |
| | Rated load current (at 13.5 V) A | 10 |
| | Rated coil current A | 0.2 or less |
| | Voltage drop between terminals V | 0.2 or less |
| Front door lock actuator | Bound current (at 12 V) A | 2.5–4.5 |
| | Operator voltage range V | 9–15 |
| | *Tripping time (at 12 V) Second | 5–30 |
| Rear door lock actuator | Bound current (at 12 V) A | 2.5–4.5 |
| | Operator voltage range V | 9–15 |
| | *Tripping time (at 12 V) Second | 5–30 |

NOTE
* Tripping time is the time consumed until current reaches 0.5 A after power connection.

# SERVICE SPECIFICATIONS

42100030018

| Items | | Standard value |
|---|---|---|
| Door inside handle play mm (in.) | | 4–10 (.16–.39) |
| Door outside handle play mm (in.) | Front and rear door | 3–12 (.12–.47) |
| | Back door | 2–8 (.08–.31) |
| Slipping force of motor clutch N (lbs.) | | 39–49 (9–11) |
| Sunroof sliding resistance N (lbs.) | | 196 (44) |

## SEALANTS AND ADHESIVES

42100050052

| Items | Specified sealants and adhesives |
|---|---|
| Screen drip<br>Sunroof glass weatherstrip | 3M ATD Part No. 8001, 3M ATD Part No. 8011 or equivalent |
| Fender panel<br>Splash shield<br>Waterproof film | 3M ATD Part No. 8625 or equivalent |
| Windshield glass<br>Rear window glass | 3M Super Fast Urethan Auto Glass Sealant Part No. 8609 or equivalent |
| | 3M Super Fast Urethan Primer Part No. 8608 or equivalent |
| Sunroof glass weatherstrip | 3M ATD Part No. 8513 or equivalent |
| | 3M ATD Part No. 8509 or equivalent |
| Rail end cover | 3M ATD Part No. 8531, 8646 or equivalent |

## SPECIAL TOOLS

42100060048

| Tool | Tool number and name | Supersession | Application |
|---|---|---|---|
|  | MB990449<br>Window moulding remover | – | Removal of window moulding |
|  | MB990900-01<br>Door adjusting wrench | – | Adjustment of door fit |
|  | MB991502<br>Scan Tool (MUT-II) | – | Cryptographic code registering |
|  | ROM Pack | – | |

TSB Revision

# TROUBLESHOOTING

42100070041

## HOOD, GLASS, DOORS AND SUNROOF

| Trouble Symptom | | Probable Cause | Remedy |
|---|---|---|---|
| Hood | Incorrect closure | Striker and latch not properly aligned | Adjust the alignment. |
| | Difficult locking and unlocking | Striker and latch not properly aligned | Adjust the alignment. |
| | Uneven body clearance | Incorrectly installed hood or trunk lid | Adjust the installation of the hood or the trunk lid. |
| | Uneven height | Incorrect hood bumper height | Adjust the hood bumper height. |
| Window glass | Water leak through windshield | Malfunction of seal | Apply sealant. |
| | | Incorrect body flange | Correct |
| | Water leak through door window glass | Incorrect window glass installation | Adjust the position. |
| | | Gap at upper window glass | Adjust the position. |
| | Water leak through quarter window | Malfunction of seal | Apply sealant. |
| | | Incorrect body flange | Correct |
| | Water leak through rear window | Malfunction of seal | Apply sealant. |
| | | Incorrect body flange | Correct |
| Front/ rear/ back doors | Malfunction of door window | Incorrect window glass installation | Adjust the position. |
| | | Damaged or defective regulator | Correct or replace |
| | Water leak through door edge | Cracked or defective weatherstrip | Replace |
| | Water leak from door center | Clogged drain hole | Remove the foreign material. |
| | | Damaged waterproof film or poor film contact | Correct or replace |
| | Door is hard to open | Incorrect latch or striker adjustment | Adjust |
| | Door does not open or close completely | Incorrect door installation | Adjust the position. |
| | | Malfunction of door check strap | Correct or replace |
| | | Door check strap and hinge requires grease | Apply grease |
| | Uneven body clearance | Incorrect door installation | Adjust the position. |
| | Wind noise around door | Weatherstrip not holding firmly | Adjust the fit of the door. |
| | | Incorrectly installed weatherstrip | Repair or replace |
| | | Incorrectly closed door | Adjust |
| | | Incorrect door fit adjustment | Adjust |

| Trouble Symptom | | Probable Cause | Remedy |
|---|---|---|---|
| Front/ rear/ back doors | Wind noise around door | Incorrect clearance between door glass and door weatherstrip holder | Adjust |
| | | Deformed door | Repair or replace |
| Sunroof | Water leaks | Dust accumulated in drainage of housing assembly | Keep dust out of the inside of the drain hose |
| | | Clogged drain hose | Blow air into the drain hose to remove the dust. |
| | | Broken or dislocated drain hose, or failed or cracked clip | Check the hose installation and the flange contact. |
| | | Worm roof lid weatherstrip | Replace |
| | | Excessive roof lid-to-body clearance or incorrectly fitted weatherstrip | Adjust |
| | Wind noise | Loose or deformed deflector | Re-tighten or replace |
| | Roof lid makes noise when moved | Foreign material lodged in guide rail | Check the drive cable and guide rails for foreign material. |
| | | Loose guide rails and lid | Re-tighten |
| | Motor runs but lid does not move or moves only halfway | Foreign material lodged in guide rail | Check the drive cable and guide rails for foreign material. |
| | | Incorrect engagement of motor pinion with drive cable | Check for loose motor installation or a damaged pinion. |
| | | Decrease in clutch slipping force of motor | Adjust or replace |
| | | Increased lid sliding resistance or interference of lid with drive cables, weatherstrip, etc. due to incorrect adjustment of lid | Adjust or replace |
| | Noise in motor (clutch slipping noise made in motor when lid is fully opened or closed is not unusual noise.) | Incorrect engagement of motor pinion with drive cable | Check the pinion installation and re-tighten the motor. |
| | | Worn or damaged motor pinion bearing | Replace the motor assembly. |
| | | Worn or deformed drive cable | Replace |

## HOW TO LOCATE WIND NOISE

42100420013

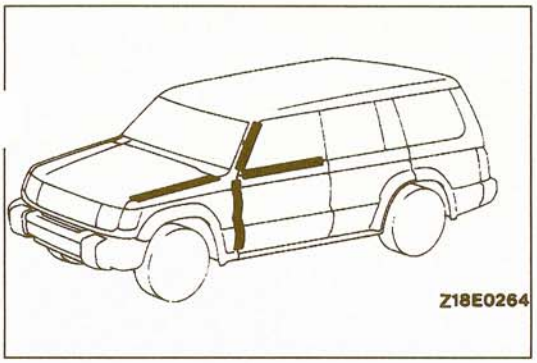


(1) Attach cloth tape to a place which might conceivably be the source of wind noise, such as panel seams, projections, moulding seams, glass and body seams, etc.
(2) Then carry out a road test in order to determine that the places not covered by tape are not sources of wind noise.

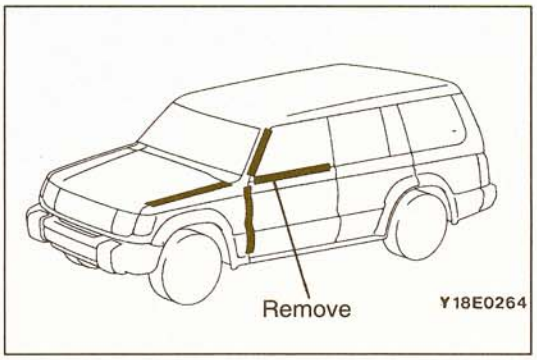


(3) Then remove the strips of tape one by one, carrying out a road test after each is removed, until the wind noise source is found.

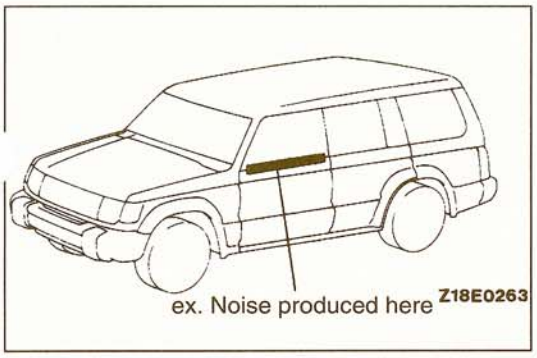


(4) If such a place is found, cover it again and continue with the procedure to determine if there are any other noise sources.
(5) If no others are found, the last remaining tape is the only source.

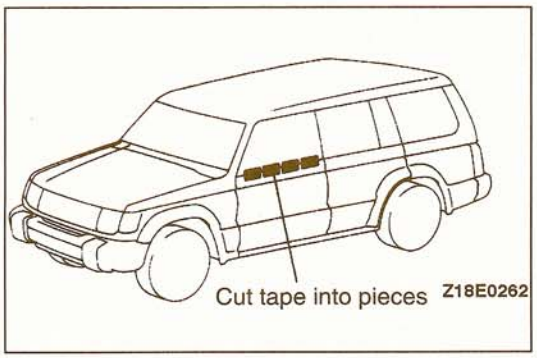


(6) Cut the remaining piece of tape into smaller pieces, attach it again as it was before, and then remove the pieces one by one in the same way so as to narrow down the source.

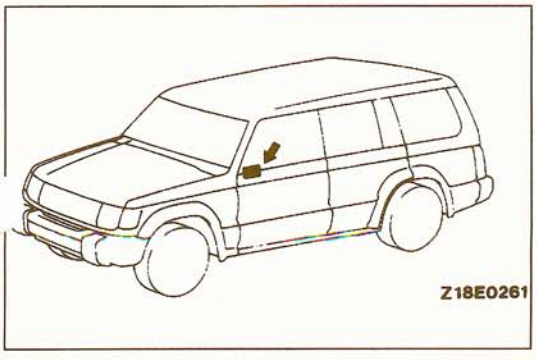


(7) Check that wind noise occurs when the last remaining tape is removed, and that noise does not occur when it is re-attached.
(8) When the source(s) of the wind noise is finally located, attach butyl tape, body sealer or similar material to obstruct this source as much as possible.

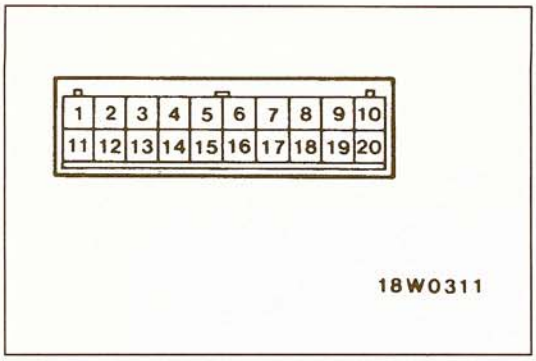


## KEYLESS ENTRY CONTROL UNIT INSPECTION

42100430016

(1) Remove the combination meter.
(Refer to GROUP 54 – Combination Meter.)
(2) Disconnect the amplifier and inspect the connector on the wire harness side as shown in the chart below.

| Terminal No. | Signal | Conditions | | Terminal voltage |
|---|---|---|---|---|
| 2 | Door switch | Dome light switch: Door | Door open (Door switch: ON) | 0V |
| | | | Door shut (Door switch: OFF) | 12V |
| 6 | Door-lock actuator (Driver side) | LOCK | | 5V (Pulse output*) |
| | | UNLOCK | | 0V |
| 8 | Key reminder switch | ON (Key removed) | | 0V |
| | | OFF (Key installed) | | 5V (Pulse output*) |
| 9 | Keyless entry control unit power source | Ignition switch (ACC) | | Battery positive voltage |
| 10 | Keyless entry control unit power source | Always | | Battery positive voltage |
| 11 | Dome light | All doors closed (Door switch: OFF) | Dome light switch: OFF or ON | 0V |
| | | | Dome light switch: Door | Battery positive voltage |
| 12 | Door lock control unit and door lock relay | LOCK | | 0V |
| | | UNLOCK | | Battery positive voltage |
| 13 | Door lock control unit | LOCK | | Battery positive voltage |
| | | UNLOCK | | 0V |
| 14 | Door lock relay | LOCK | | Battery positive voltage |
| | | UNLOCK | | 0V |
| 20 | Ground | – | | 0V |

NOTE
*: Use an oscilloscope. When using the tester, 0–0.03V is indicated repeatedly.

TSB Revision

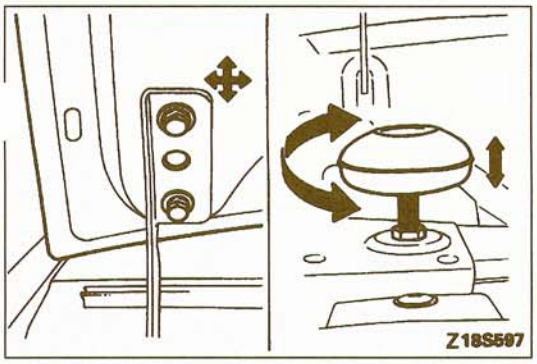


# ON-VEHICLE SERVICE

42100090016

## HOOD ADJUSTMENT

1. Loosen the hood mounting bolts, and then adjust the hood by moving it so that the clearance is equal on all sides.
2. Turn the hood bumpers and adjust the height of the hood.

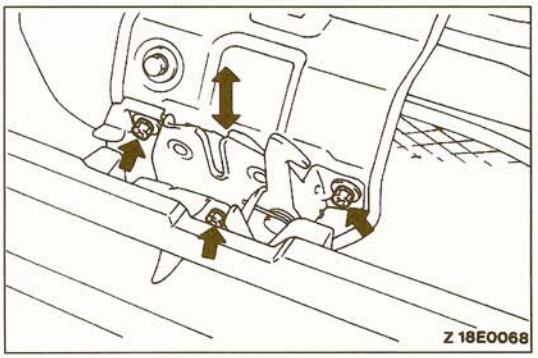


3. Loosen the hood latch mounting bolts, and move the hood latch to adjust the attachment between the hood latch and hood striker.

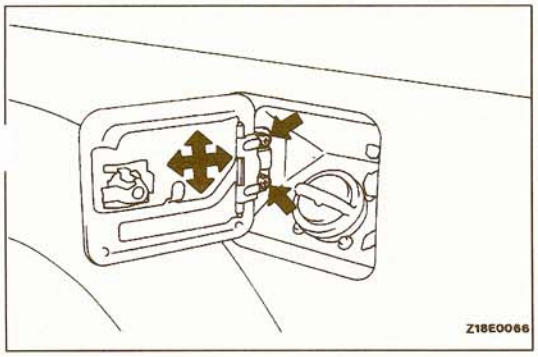


## FUEL FILLER DOOR ADJUSTMENT

42100110019

Loosen the fuel filler door mounting screw and adjust the fuel filler door so that the clearance around the fuel filler door is even without any height differences.

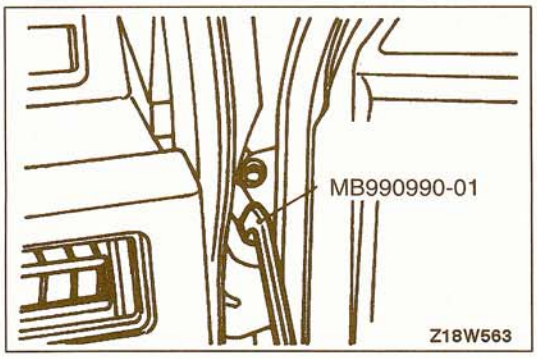


## FRONT AND REAR DOOR ADJUSTMENT

42300110015

1. Use the special tool to loosen the hinge mounting bolts on the body side, and then adjust the clearance around the door so that it is uniform on all sides.

   **Caution**
   **Attach protection tape to the fender edges where the hinge is installed.**




2. When replacing the door, loosen the hinge mounting bolts on the door side and adjust the alignment of the fender panel with the front door panel.
3. Loosen the door striker mounting screws to adjust the alignment of the door panel.
4. Increase or decrease the number of shims and move the striker to adjust the engagement of the striker with the door latch.

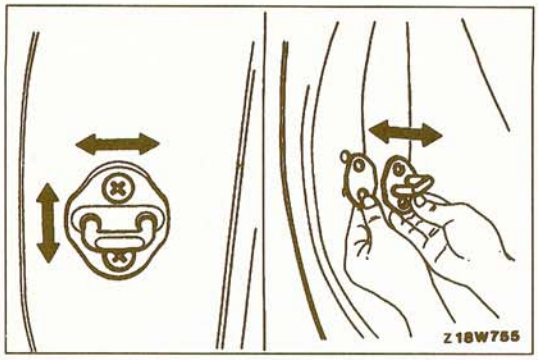


## BACK DOOR ADJUSTMENT 42300170013

1. Adjust the fit of the door panel to the body by loosening the striker mounting screws and moving the striker.
2. Adjust the linking of the striker and the door latch b increasing or decreasing the thickness of the striker shim.

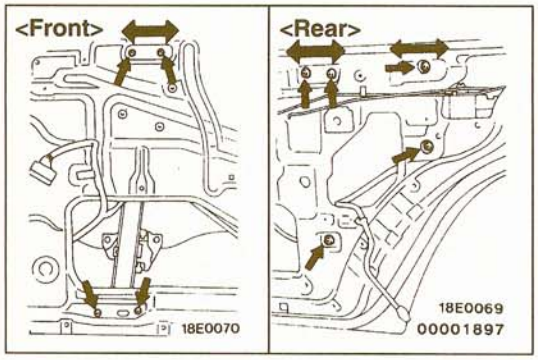


## DOOR WINDOW GLASS ADJUSTMENT 42300100050

Check that the door window glass runs smoothly in the door glass channel when the glass is fully raised and lowered. If it does not, adjust by the following procedure.

1. Remove the door trim and waterproof film. (Refer to P.42-27.)
2. Loosen the window regulator assembly mounting bolts and move the upper attachment back and forward to adjust the tilt of the glass.
3. Loosen the rear door center sash mounting bolt, and adjust the front-to-back position of the glass.

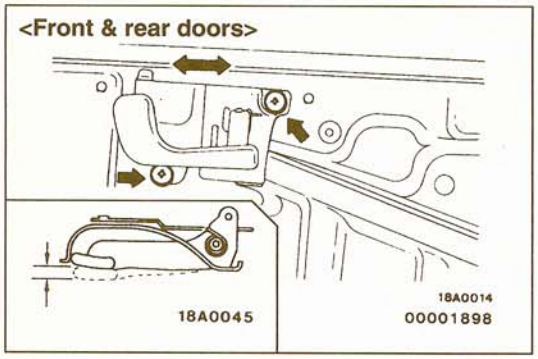


## DOOR INSIDE HANDLE PLAY ADJUSTMENT 42300150055

1. Remove the door trim and waterproof film. (Refer to P.42-27.)
2. Move the door inside handle installation position back and forth to adjust so that the inside handle play allowance is at the standard value.

**Standard value: 4–10 mm (.16–.39 in.)**

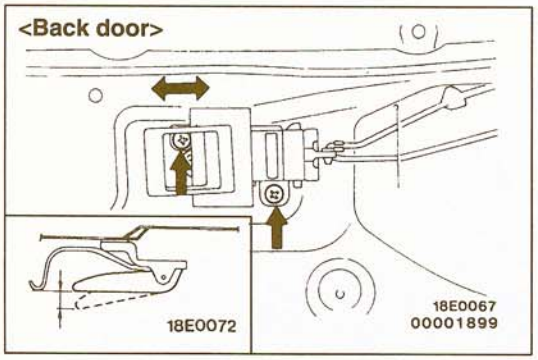


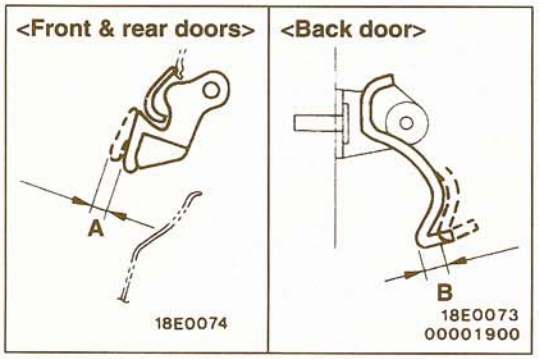


## DOOR OUTSIDE HANDLE PLAY CHECK 42300160041

If the door outside handle play is not at the standard value, check the door outside handle or door latch assembly, and replace if necessary.

**Standard value**

**(A): 3–12 mm (.12–.47 in.)**
**(B): 2–8 mm (.08–.31 in.)**

TSB Revision

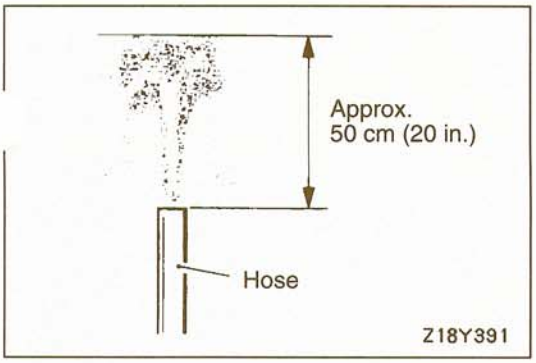


## WATER TEST

42600090042

1. Fully close the sunroof.
2. Hold the hose upward and adjust the water fountain height to about 50 cm (20 in.).

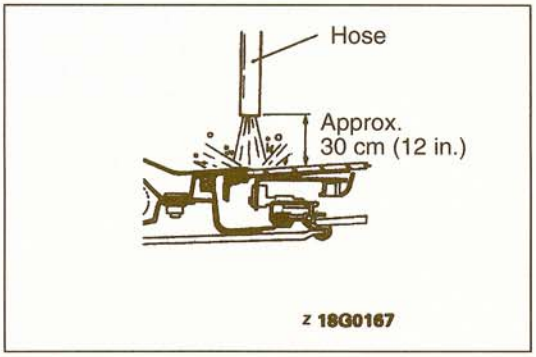


3. Pour water over the roof from about 30 cm (12 in.) above the roof for more than 5 minutes.
4. While pouring water, check for leaks around the sunroof.
5. In the event of leakage, check the drain hose, weatherstrip contact, etc.

# BODY MOUNTING

42100370011

## REMOVAL AND INSTALLATION

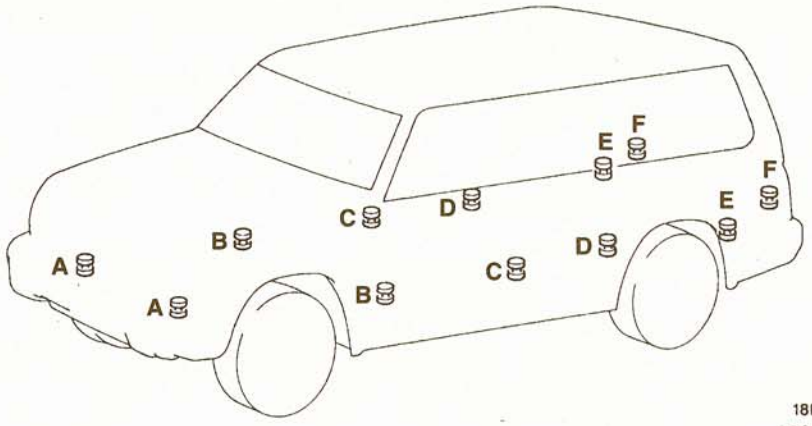


18E0077
00004077

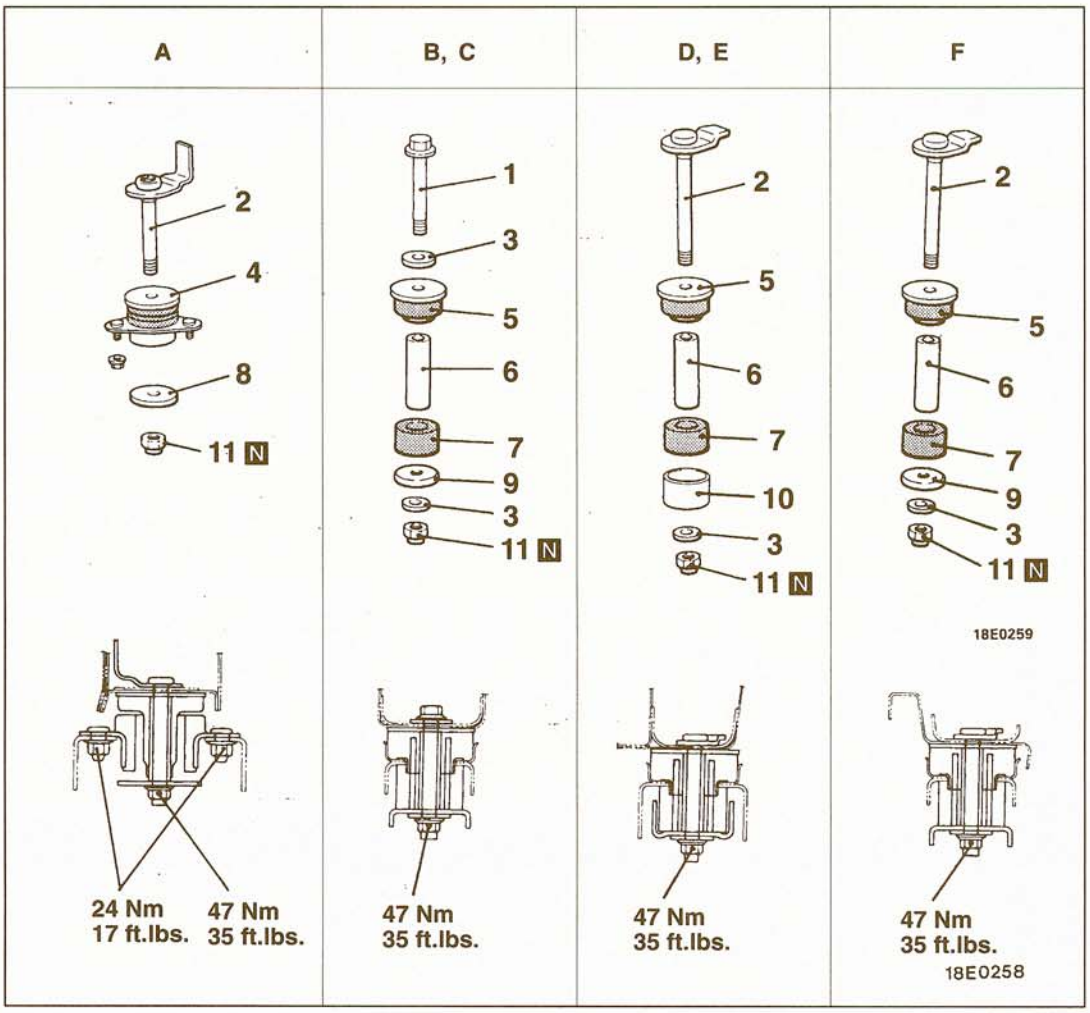


1. Special bolt
2. Mounting bolt
3. Plain washer
4. Body mounting rubber
5. Body mounting rubber A
6. Spacer
7. Body mounting rubber B
8. Plate
9. Washer
10. Body mount stopper
11. Self locking nut

**TSB Revision**

# HOOD

42100160069

## REMOVAL AND INSTALLATION

**Hood Post-installation Operation**
- Hood Adjustment (Refer to P.42-9.)

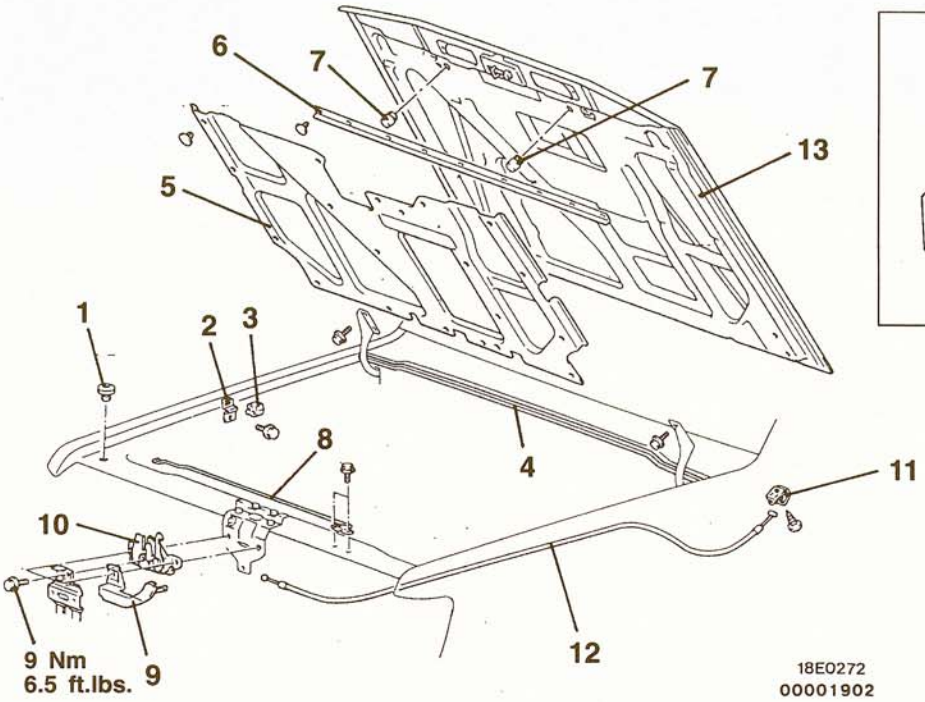


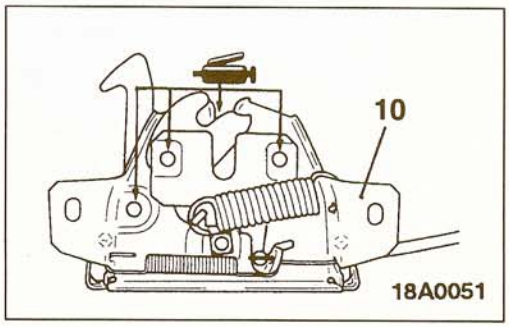


▶A◀ 1. Hood bumper
2. Hood bumper bracket
3. Damper
4. Hood rear weatherstrip
5. Hood heat protector
6. Hood front weatherstrip
7. Bumper
8. Hood support rod

**Hood latch and hood lock release cable removal steps**
- Radiator grille

9. Hood cable protector
10. Hood latch
11. Hood lock release handle
12. Hood lock release cable

**Hood removal steps**
- Washer tube (Refer to GROUP 51 – Windshield Wiper and Washer.)

13. Hood

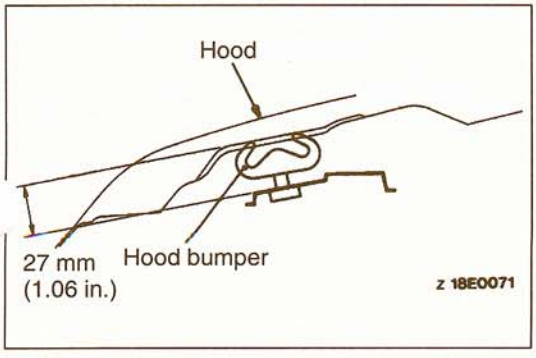


## INSTALLATION SERVICE POINT

### ▶A◀ HOOD BUMPER INSTALLATION

Install the hood bumper as shown in the illustration.

**TSB Revision**

# FUEL FILLER DOOR

42100250070

## REMOVAL AND INSTALLATION

**Fuel Filler Door Post-installation Operation**
- Fuel Filler Door Adjustment (Refer to P.42-9.)

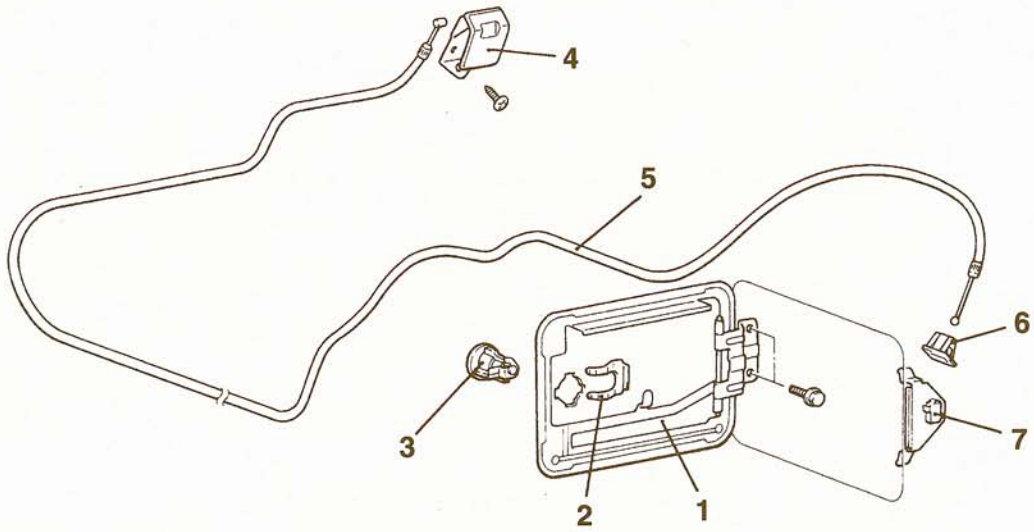


18E0059

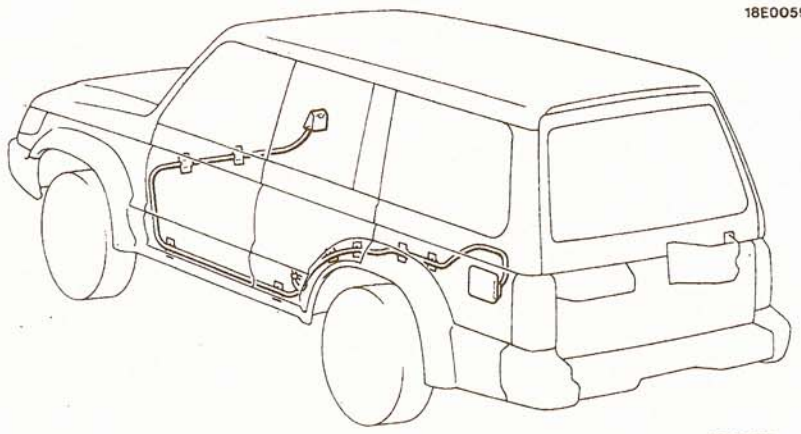

18E0265

00001903

1. Fuel filler door

**Lock cylinder assembly removal steps**

2. Retainer
3. Lock cylinder assembly

**Fuel filler door lock release cable removal steps**

- Center pillar trim (LH) (Refer to GROUP 52A – Trims.)
- Front scuff plate (LH) (Refer to GROUP 52A – Trims.)
- Rear scuff plate (LH) (Refer to GROUP 52A – Trims.)
- Quarter trim (LH) (Refer to GROUP 52A – Trims.)

4. Fuel filler door lock release handle
5. Fuel filler door lock release cable
6. Cable holder

**Fuel filler door hook removal steps**

5. Fuel filler door lock release cable connection
7. Fuel filler door hook

**TSB Revision**

# FENDER

42100190068

## REMOVAL AND INSTALLATION

**Pre-removal and Post-installation Operation**
**Removal and Installation**
- Front Mud Guard and Wide Fender (Refer to GROUP 51 – Side Garnish and Wide Fender.)

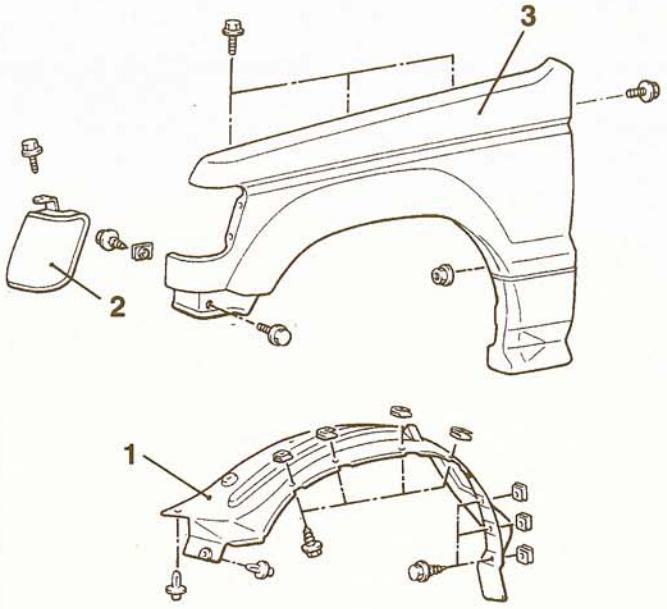


18E0062

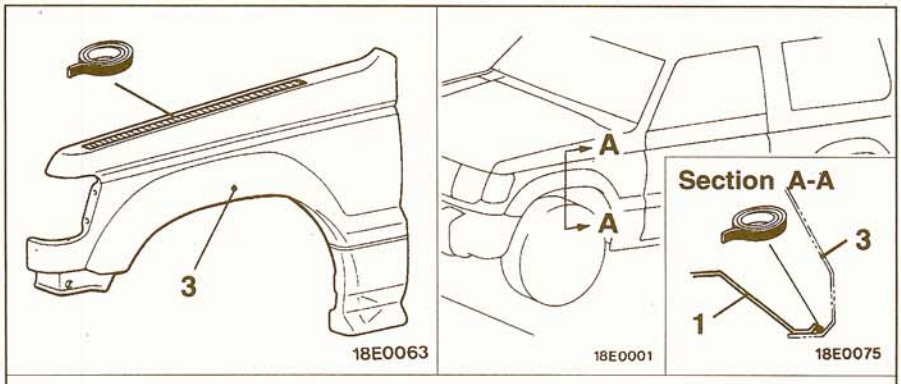


**Sealant: 3M ATD Part No.8625 or equivalent**

00001904

**Removal steps**
1. Splash shield
2. Front turn signal light
- Front bumper
  (Refer to GROUP 51 – Front Bumper.)
3. Front fender panel

**TSB Revision**

# WINDOW GLASS

42200010046

## GENERAL

For bonding of the windshield and rear window glass, a single-liquid urethane adhesive is used.

### ADHESIVE AND RESERVE ITEMS

| Adhesive and Reserve Items | | Applications | Quantity |
|---|---|---|---|
| **Adhesive** | 3M SUPER FAST URETHAN 8609 | – | One cartridge |
| | 3M SUPER FAST URETHAN PRIMER 8608 | – | As required |
| **Reserve Items** | Wire (dia.×length) | for cutting adhesive | Five pieces of wire 0.6 mm×1 m (.02 in.×3.3 lt.) |
| | Adhesive gun | for adhesive application | One |
| | 3M ATD Part No. 8906 | for cleaning jointing surfaces | As required |
| | Wiping rags | – | As required |
| | Sealer | for prevention of water leaks and gathering after adhesive application | As required |
| | Glass holder | – | Two |
| | Windshield moulding (Service Part) | – | One |
| | Window dam (Service Part) | – | As required |

## WORKING PROCESS

42200540026

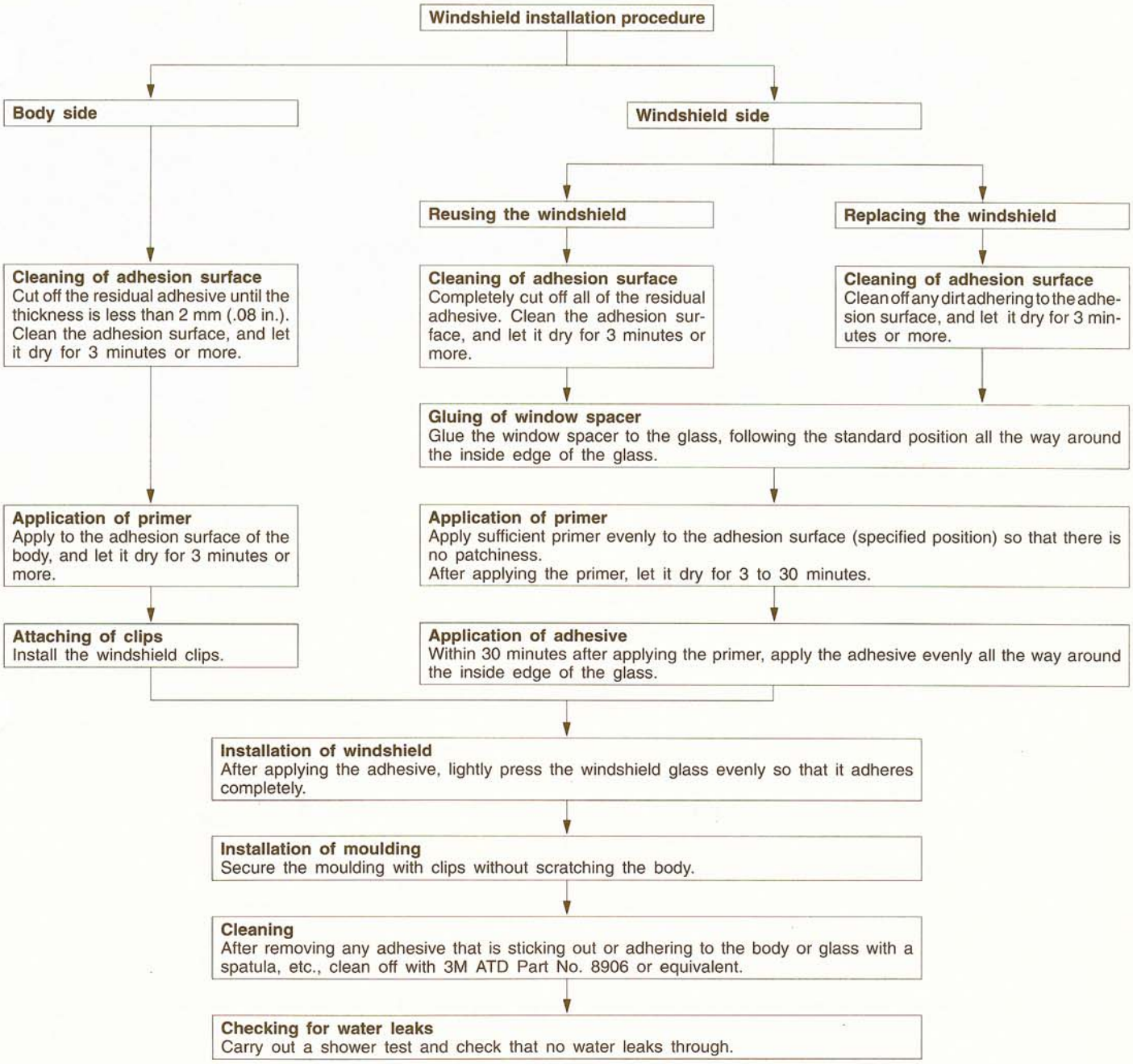


**TSB Revision**

# WINDSHIELD

42200100064

## REMOVAL AND INSTALLATION

**Pre-removal and Post-installation Operation**
**Removal and Installation**
- Instrument Panel (Refer to GROUP 52A – Instrument Panel.)
- Front Pillar Trim (Refer to GROUP 52A – Trims.)
- Front Deck Garnish (Refer to GROUP 51 – Garnish and Moulding.)

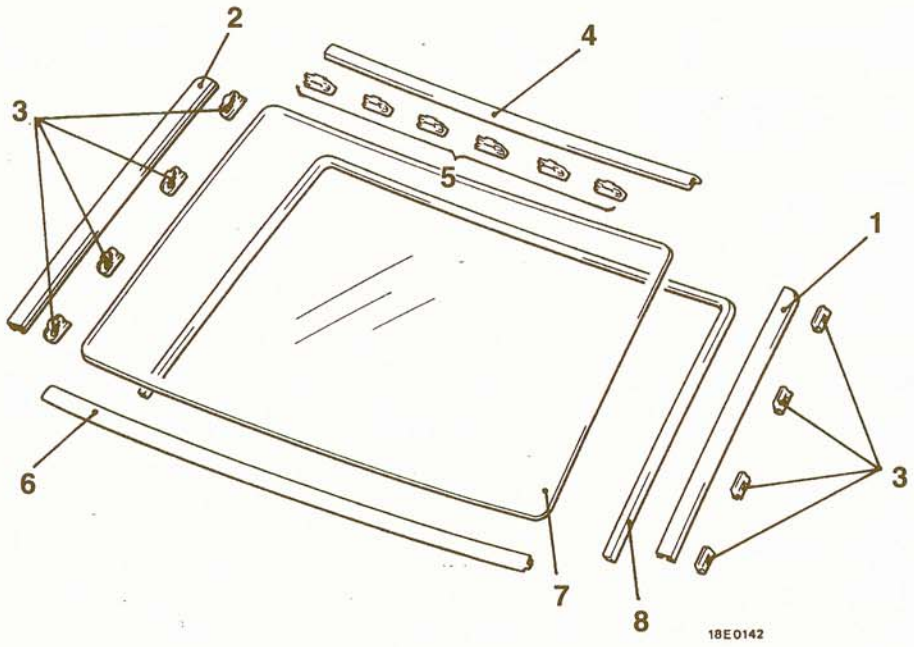


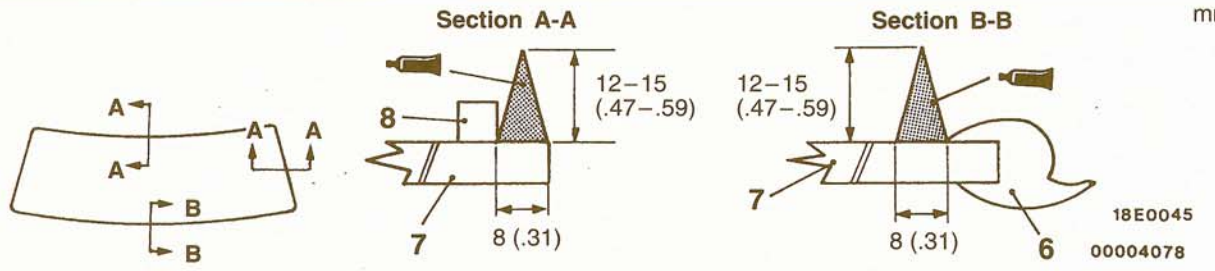


**Adhesive: 3M Super Fast Urethan Auto Glass Sealant Part No. 8609 or equivalent**

**Removal steps**

◀A▶ 1. Windshield side moulding (LH)
◀A▶ 2. Windshield side moulding (RH)
3. Windshield clip
◀A▶ 4. WIndshield upper moulding
5. Windshield clip
▶B◀ 6. Windshield lower moulding
◀B▶ ▶B◀ 7. Windshield glass
▶A◀ 8. Window spacer

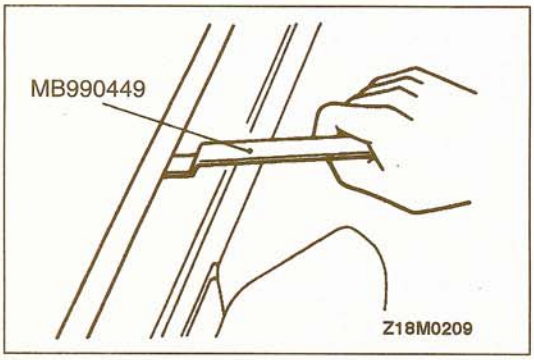


## REMOVAL SERVICE POINTS

### ◀A▶ WINDSHIELD SIDE MOULDING (L.H.)/WINDSHIELD SIDE MOULDING (R.H.)/WINDSHIELD UPPER MOULDING REMOVAL

Use the special tool to lever out each moulding.

**Caution**
**Mouldings that become warped should not be re-used.**

**TSB Revision**

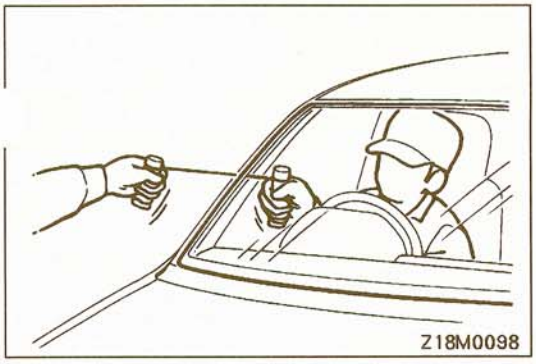


### ◀B▶ WINDSHIELD GLASS REMOVAL

(1) To protect the body (paint surface), apply cloth tape to all body areas around the installed windshield glass.
(2) Use a sharp-pointed drill to make a hole in the windshield glass adhesive.
(3) Pass wire from the inside of the vehicle through the hole.
(4) Pull the wire alternately from the inside and outside along the windshield glass to cut the adhesive.

**Caution**
**Do not let the wire touch the edge of the windshield glass.**

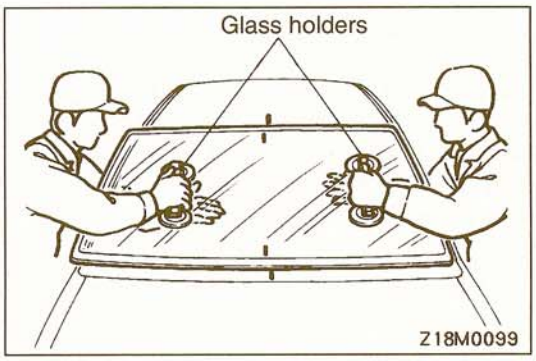


(5) Make mating marks on the windshield glass and body.
(6) Use the glass holders to remove the windshield glass.

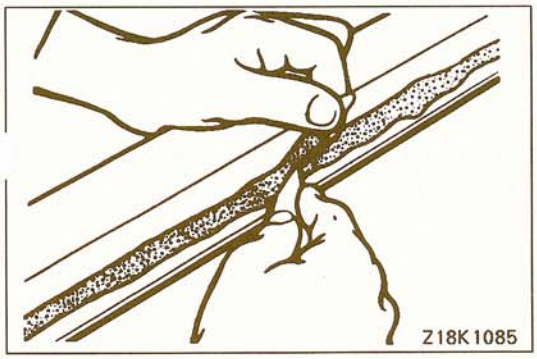


(7) Use a knife to cut away the remaining adhesive so that the thickness is within 2 mm (.08 in.) around the entire circumference of the body flange.
(8) Finish the flange surfaces so that they are smooth.

**Caution**
1. **Be careful not to remove more adhesive than is necessary.**
2. **Be careful also not to damage the paintwork on the body surface with the knife. If the paintwork is damaged, repair the damaged area with repair paint or anti-rust agent.**

(9) When reusing the glass, remove the adhesive and window spacer chips still adhering to the window glass, and clean with 3M ATD Part No. 8906 or equivalent.
(10) Clean the body side in the same way.

**Caution**
**Let the cleaned places stand for 3 minutes or more, and carry out the next procedures after they have dried. Also, do not touch any surface that has been cleaned.**

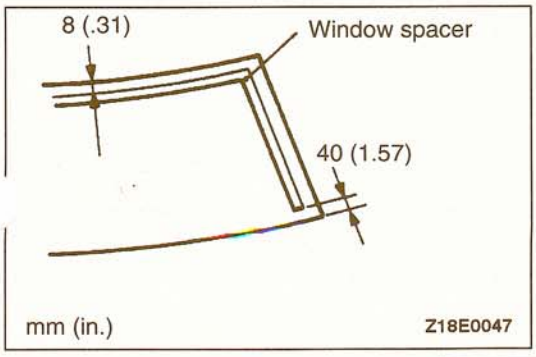


## INSTALLATION SERVICE POINTS

### ▶A◀ WINDOW SPACER INSTALLATION

After cleaning the window spacer adhesion surface of the windshield glass with 3M ATD Part No. 8906 or equivalent to remove all grease, etc., attach the window spacer as shown in the illustration.

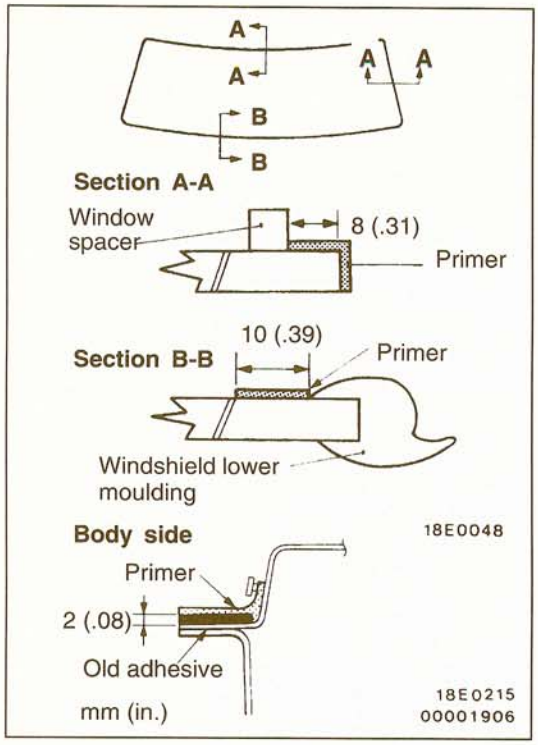


## ▶B◀ WINDSHIELD GLASS/WINDSHIELD LOWER MOULDING INSTALLATION

(1) When replacing the glass, provisionally set the glass against the body, and put mating marks on the glass and body where they match.

(2) Install the windshield lower moulding onto the windshield glass.

(3) Soak a sponge in the primer, and apply evenly to the glass and the body in the places shown in the illustration.

**Specified primer:**
**3M Super Fast Urethan Primer Part No. 8608 or equivalent**

**Caution**
1. **The primer strengthens the adhesive strength, so be sure to apply it evenly around the entire circumference. Also, a too thick application will cause lowering of the adhesive strength.**
2. **Do not touch the coated surface.**

(4) After applying the primer, let it dry for 3 to 30 minutes.

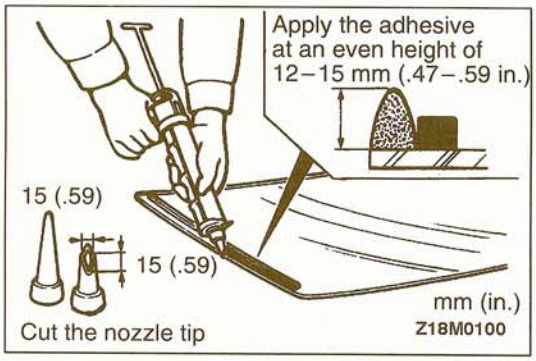


(5) Within 30 minutes after applying the primer, fill the sealant gun with adhesive and apply the adhesive evenly around the entire circumference of the windshield.

**Specified adhesive:**
**3M Super Fast Urethan Auto Glass Sealant Par No. 8609 or equivalent**

NOTE
Cut the nozzle tip of the sealant gun into a V shape to facilitate adhesive application.

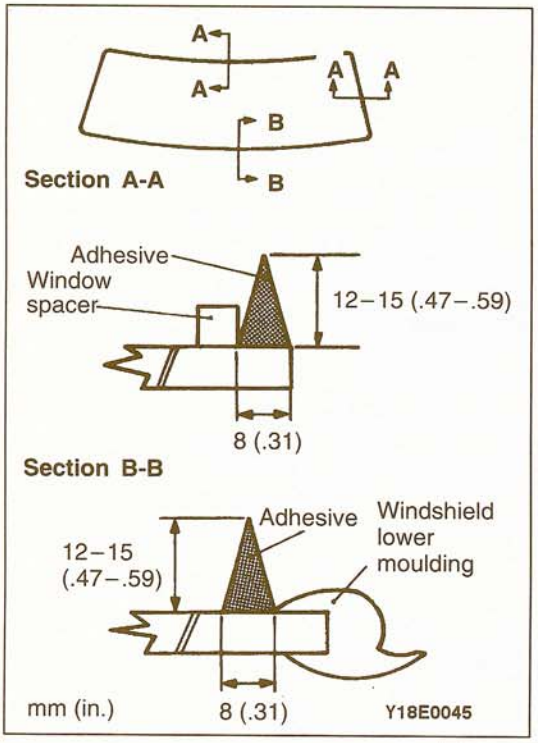


(6) Match up the mating marks on the glass and the body, and lightly press the windshield glass evenly so that it adheres completely.

(7) After removing any adhesive that is sticking out or adhering to the body or glass with a spatula, etc., clean off with 3M ATD Part No. 8906 or equivalent.
After completion of this operation (after installing the glass), place it somewhere where it will not be disturbed, until the adhesive sets.

**Caution**
**If heat is applied with an infra-red lamp to shorten the setting time, keep the surface temperature of the adhesive below 100 °C.**

(8) After attaching the windshield glass to the body, let it stand for 30 minutes or more, and then test for water leakage.

**Caution**
1. **If moving the vehicle, it should be done gently.**
2. **When testing for water leakage, do not pinch the end of the hose to spray the water.**

**TSB Revision**

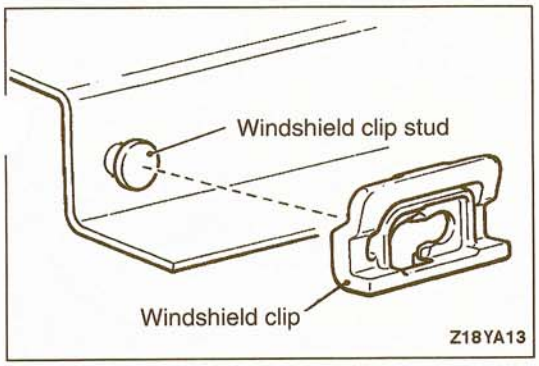


## WINDSHIELD CLIP STUD REPAIR

42100140018

If the T-studs are broken, use a drill to make holes 3 mm (.12 in.) in diameter in the T-studs, fill the holes with adhesive, and then use screws to mount the window moulding clips.

**Caution**
**After installing the clips, apply anti-rust solvent to the screw heads to protect them from rust.**

# QUARTER WINDOW GLASS

42200250042

## REMOVAL AND INSTALLATION

**<Fixed Type>**

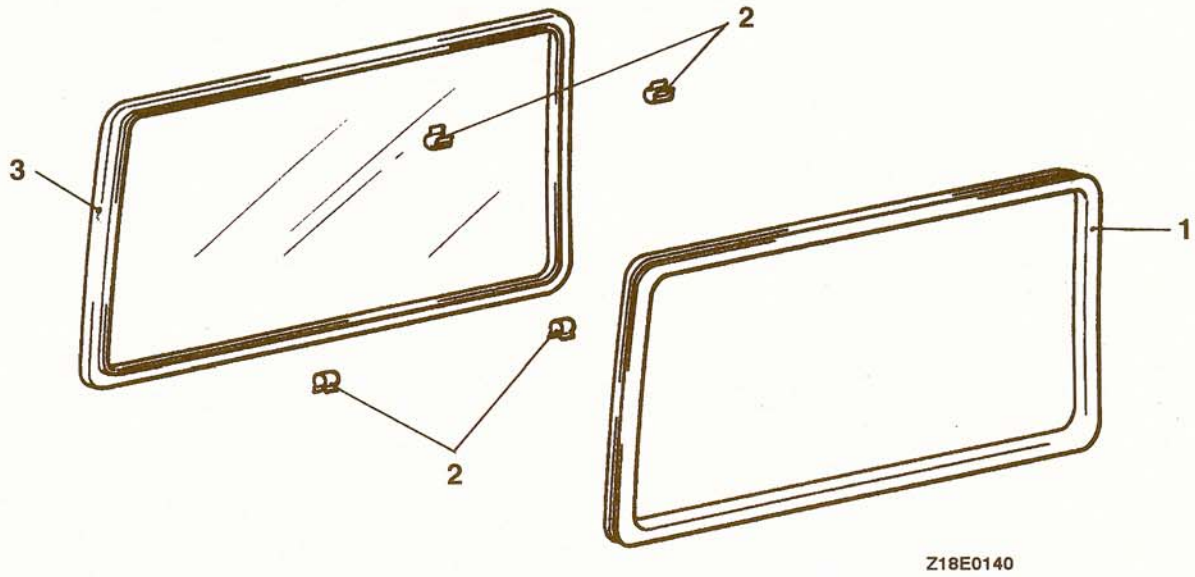


**Quarter window glass removal steps**

- Quarter upper trim
  (Refer to GROUP 52A – Trims.)

1. Opening trim
2. Clip
3. Quarter window glass assembly

<Sliding type>

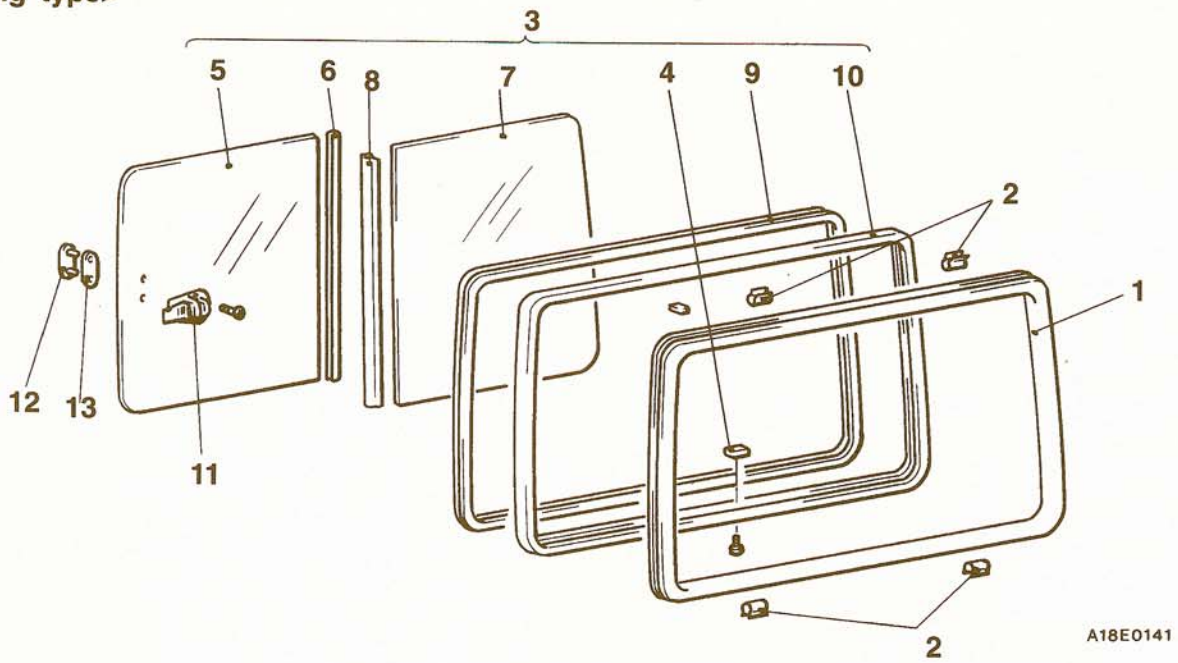


**Quarter window glass removal steps**

- Quarter upper trim (Refer to GROUP 52A – Trims.)

1. Opening trim
2. Clip
3. Quarter window glass and frame assembly
4. Glass stopper

◀A▶ 5. Quarter window glass (A)

6. Edge trim

◀A▶ 7. Quarter window glass (B)

8. Seal rubber
9. Runchannel
10. Quarter window frame assembly

**Slide glass lock removal steps**

11. Slide glass lock
12. Connector
13. Packing

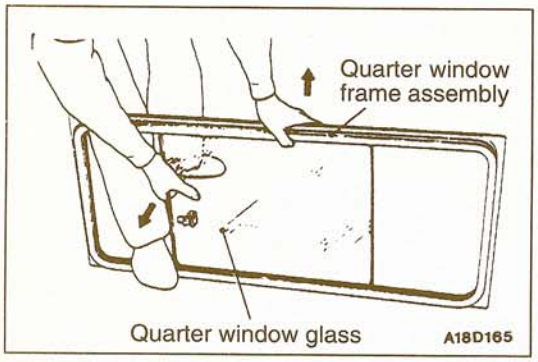


## REMOVAL SERVICE POINT

### ◀A▶ QUARTER WINDOW GLASS (A)/QUARTER WINDOW GLASS (B) REMOVAL

Remove the glass by moving the glass to the center and widening the middle section of the quarter window frame assembly.

TSB Revision

# BACK DOOR WINDOW GLASS

42200190016

## REMOVAL AND INSTALLATION

**Pre-removal and Post-installation Operation**
- Back Door Upper Trim Removal and Installation (Refer to P.42-42.)

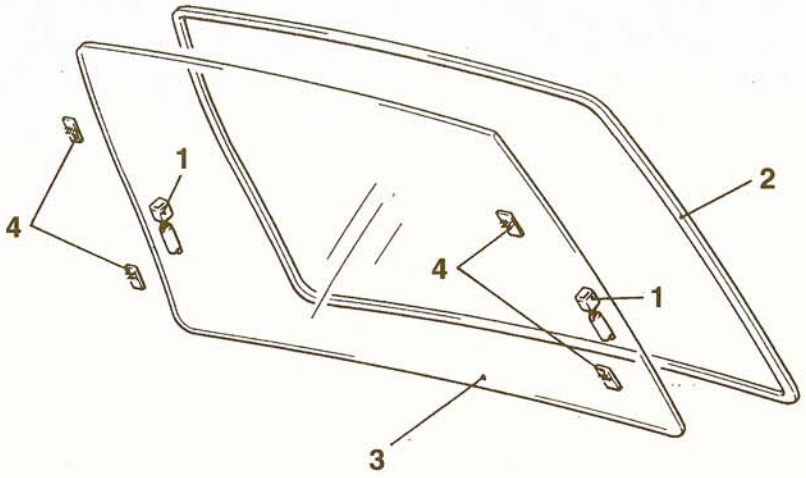


18E0304

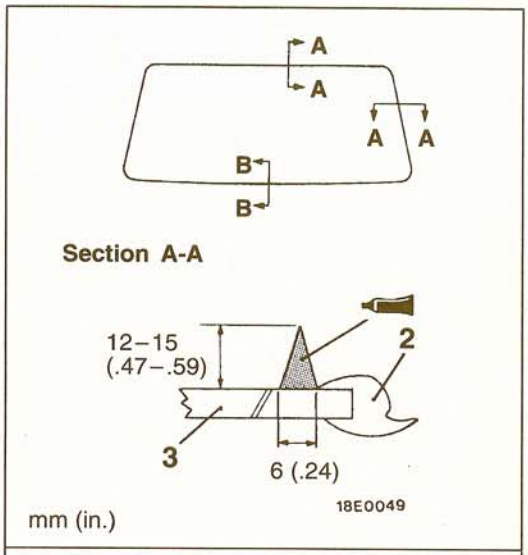


**Adhesive:**
**3M Super Fast Urethan Auto Glass Sealant Part No. 8609 or equivalent**

00001907

**Removal steps**

1. Defogger terminal
2. Back door window glass moulding
3. Back door window glass
4. Dual lock fastener

◀A▶ ▶B◀ ▶A◀

## REMOVAL SERVICE POINT

### ◀A▶ BACK DOOR WINDOW GLASS REMOVAL

Remove in the same way as for the windshield glass. (Refer to P.42-18.)

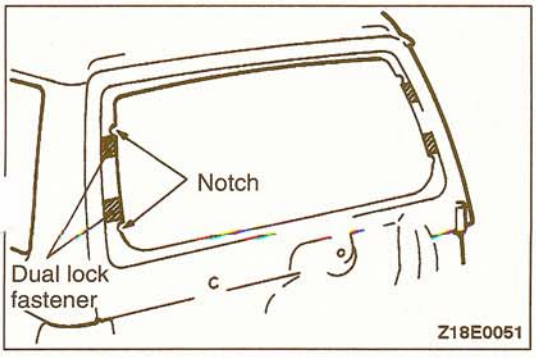


## INSTALLATION SERVICE POINTS

### ▶A◀ DUAL LOCK FASTENER INSTALLATION

Attach the dual lock fasteners so that the fastener ends are aligned with the notches on the body.

**TSB Revision**

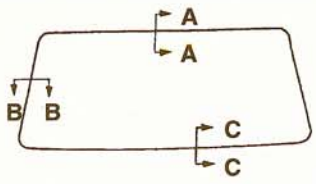


**<Application of primer>**
**Section A-A, B-B, C-C**

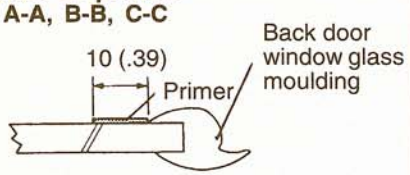


18E0044

**Body side**
**Section A-A**

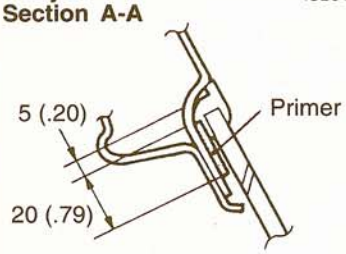


18E0295

**Section B-B (Also paint the right side)**

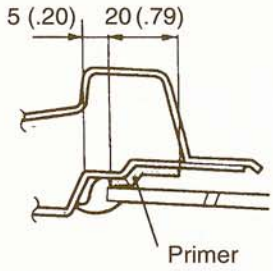


18E0296

**Section C-C**

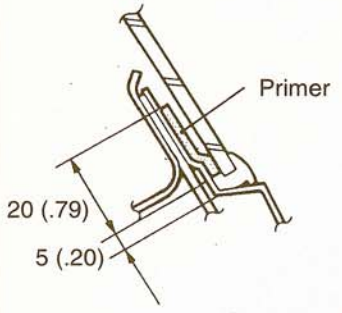


18E0294

**<Application of adhesive>**
**Section A-A, B-B, C-C**

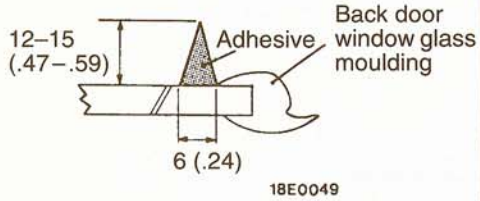


18E0049

00001908

## ▶B◀ BACK DOOR WINDOW GLASS/BACK DOOR WINDOW GLASS MOULDING INSTALLATION

Install in the same way as for the windshield glass. (Refer to P. 42-19.)

TSB Revision

# DOOR ASSEMBLY

42300220077

## REMOVAL AND INSTALLATION

**Door Post-installation Operation**
- Door Adjustment (Refer to P.42-9.)

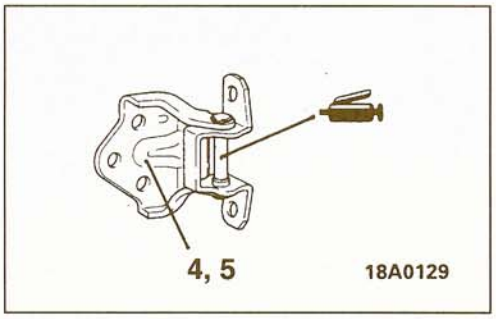


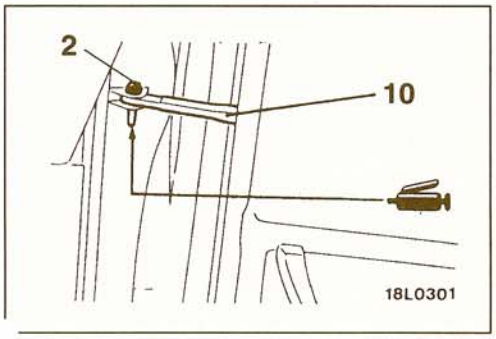


<Front door>

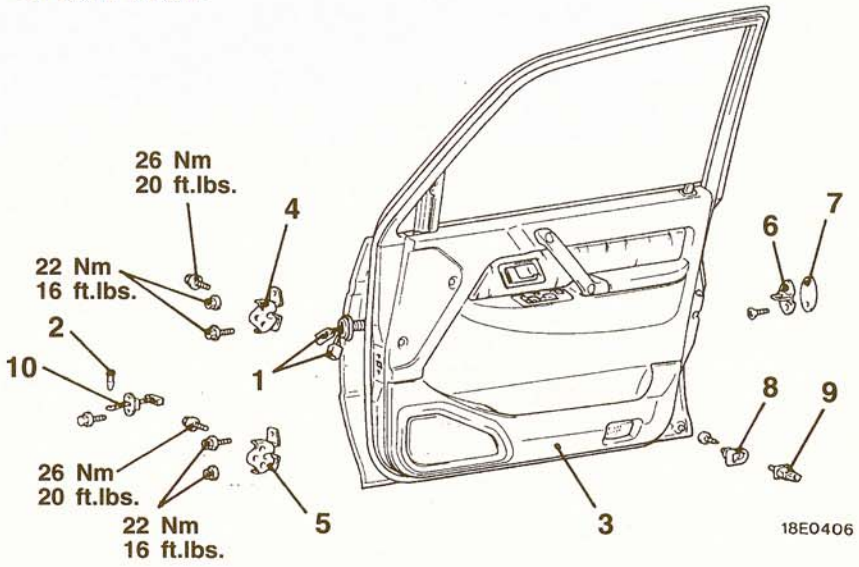


<Rear door>

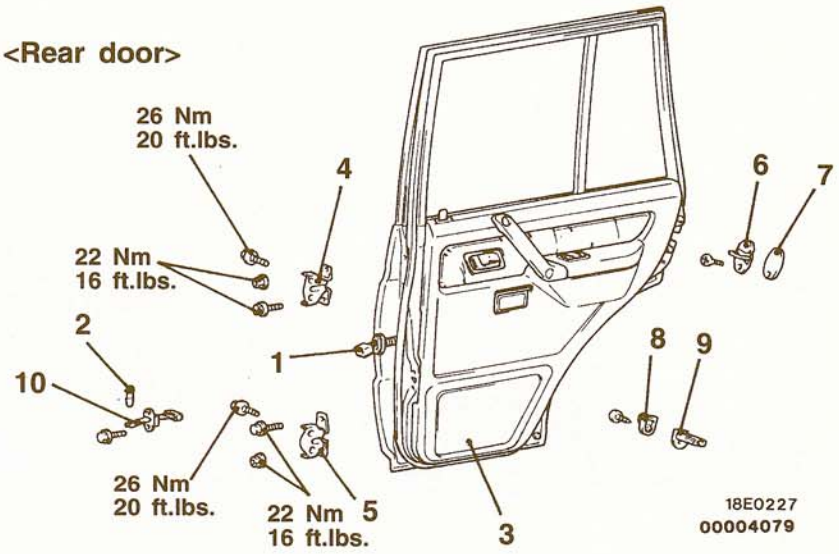


**Door removal steps**
1. Door harness connector
2. Spring pin
3. Door assembly
▶B◀ 4. Door upper hinge
▶B◀ 5. Door lower hinge

**Striker removal steps**
6. Striker
7. Striker shim

**Door switch removal steps**
8. Door switch cap
9. Door switch

**Door check strap removal steps**
- Door trim and waterproof film (Refer to P.42-27.)

2. Spring pin
▶A◀ 10. Door check strap

**TSB Revision**

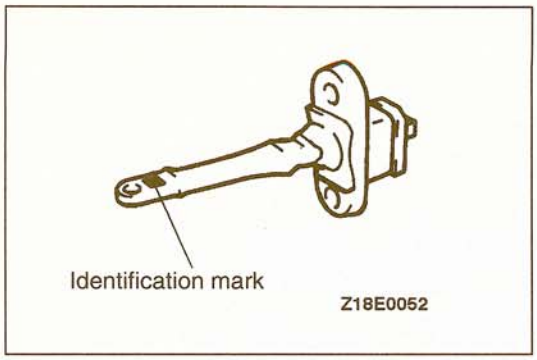


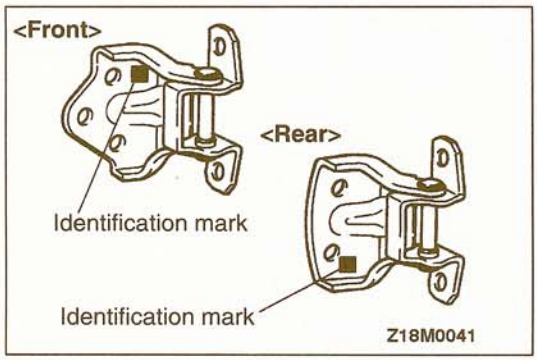


## INSTALLATION SERVICE POINTS

### ▶A◀ DOOR CHECK STRAP INSTALLATION

Install the door check so that the identification marks show below are facing upwards.

| Place of application | | Identification mark |
|---|---|---|
| R.H. | Front door | PR |
| | Rear door | OR |
| L.H. | Front door | PL |
| | Rear door | QL |

### ▶B◀ DOOR LOWER HINGE/DOOR UPPER HINGE INSTALLATION

The door hinges depend on their locations, so check the identification marks before installation.

| Place of application | | | Identification mark |
|---|---|---|---|
| Front door | | Upper hinge | F |
| | | Lower hinge | E |
| Rear door | R.H. | Upper hinge | X |
| | | Lower hinge | Z |
| | L.H. | Upper hinge | W |
| | | Lower hinge | Y |

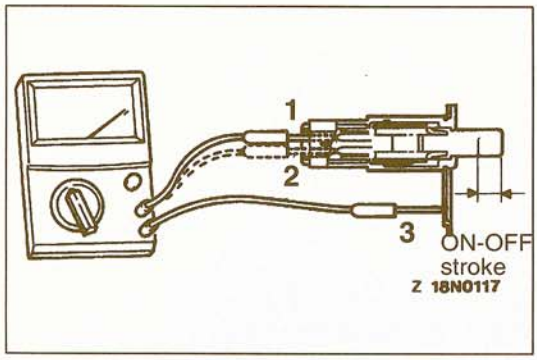


## INSPECTION

42300600048

### DOOR SWITCH

Operate the switch and check the continuity between the terminals.

**<Type 1>**

| Switch position | Terminal | | |
|---|---|---|---|
| | 1 | 2 | 3 |
| Open (ON) | ○ | ○ | ○ |
| Depressed (OFF) | | | |

**<Type 2>**

| Switch position | Terminal | |
|---|---|---|
| | 2 | 3 |
| Open (ON) | ○ | ○ |
| Depressed (OFF) | | |

TSB Revision

# DOOR TRIM AND WATERPROOF FILM

42300430074

## REMOVAL AND INSTALLATION

<Front door>




**Sealant:**
**3M ATD Part No. 8625 or equivalent**

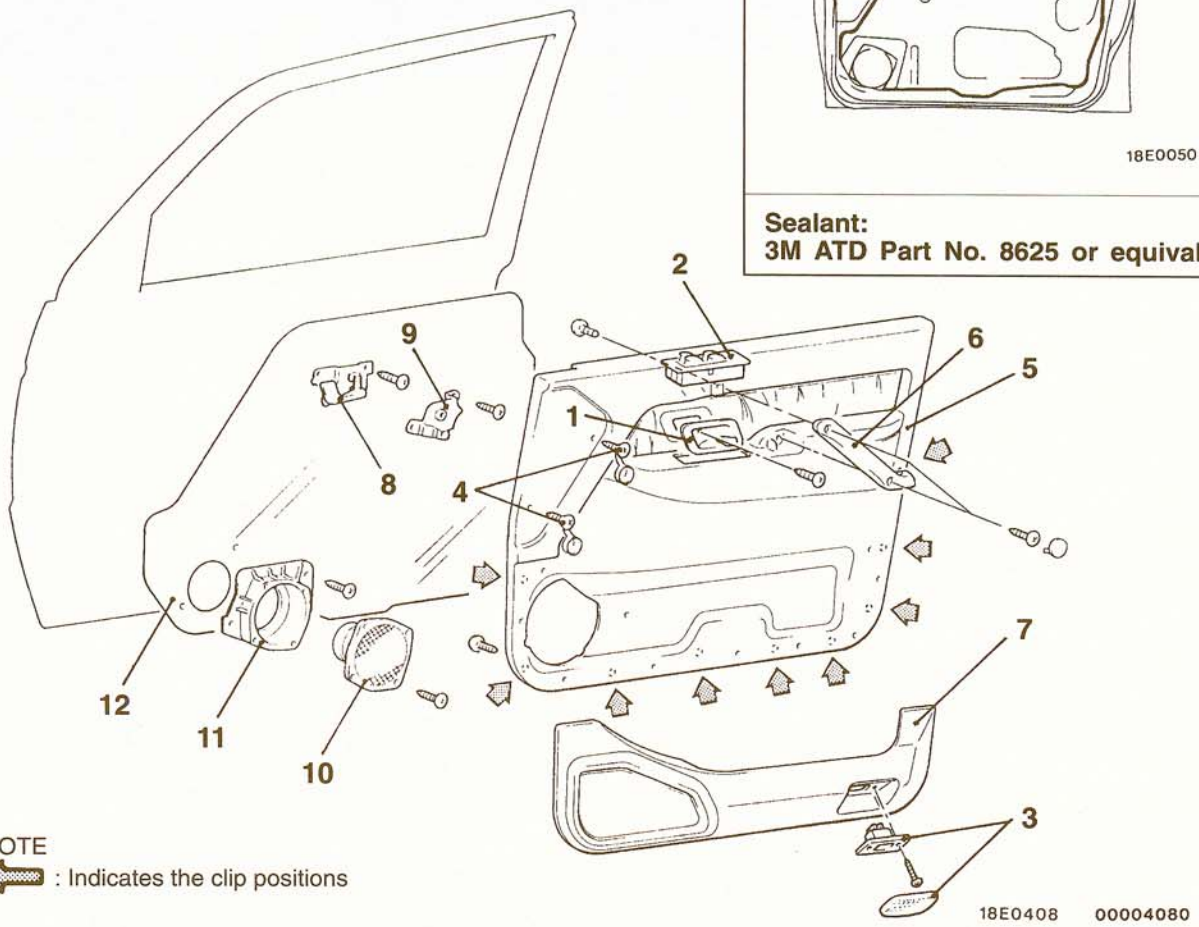


NOTE
⇦ : Indicates the clip positions

**Removal steps**

1. Inside handle cover
2. Power window switch
3. Door lamp assembly
▶A◀ 4. Screw or clip
5. Door trim
6. Door grip
7. Door pocket
8. Inside handle
9. Armrest bracket
10. Speaker
11. Speaker cover
12. Waterproof film

TSB Revision

<Rear door>

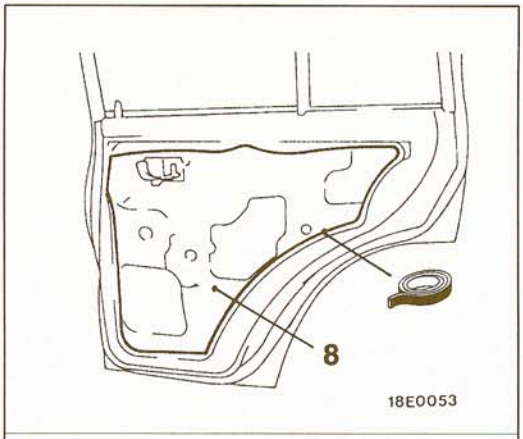


**Sealant:**
**3M ATD Part No. 8625 or equivalent**

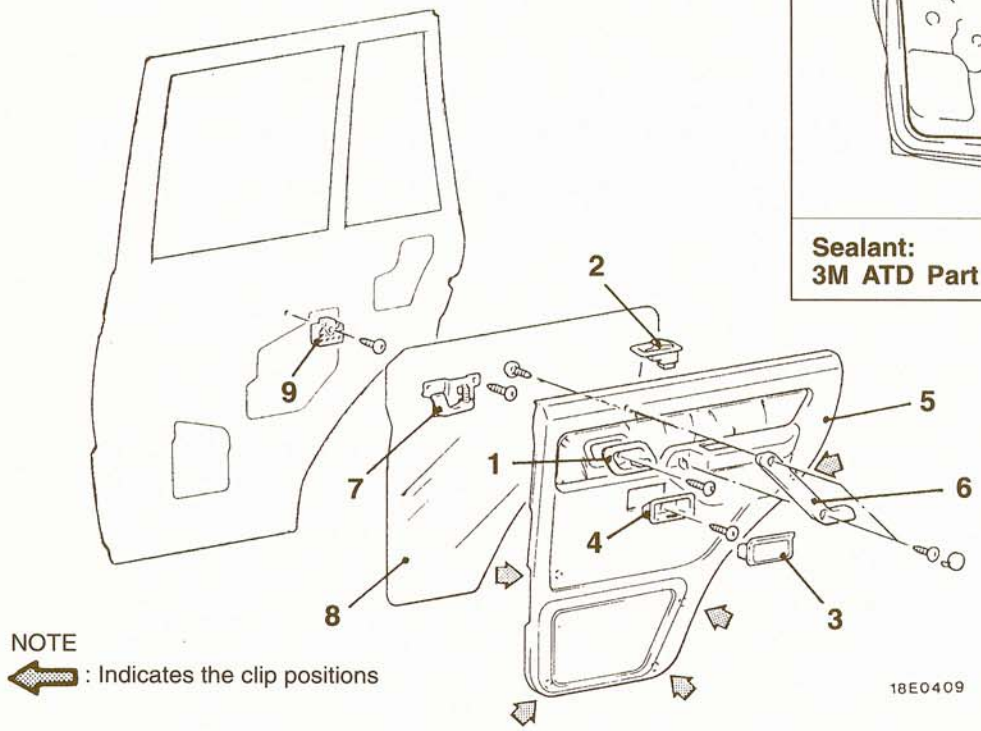


NOTE
⇦ : Indicates the clip positions

**Removal steps**

1. Inside handle cover
2. Power window switch
3. Ashtray
4. Ashtray bracket
5. Door trim
6. Door grip
7. Inside handle
8. Waterproof film
9. Screw grommet

## INSTALLATION SERVICE POINT

### ▶A◀ SCREW OR CLIP INSTALLATION

Two types of door panel and door trim are available. Identify the type from the table below, and install by the following procedure.

| Item | Door panel and door trim type | |
|---|---|---|
| | Type A | Type B |
| Door panel | Round hole<br>8 mm (.31 in.) | Square hole<br>10×12 mm (.39×.47 in.) |
| Door trim | Round hole<br>11 mm (.43 in.) | Round hole<br>6 mm (.24 in.) |
| Securing method | Clip | Cap assembled screw |

**TSB Revision**

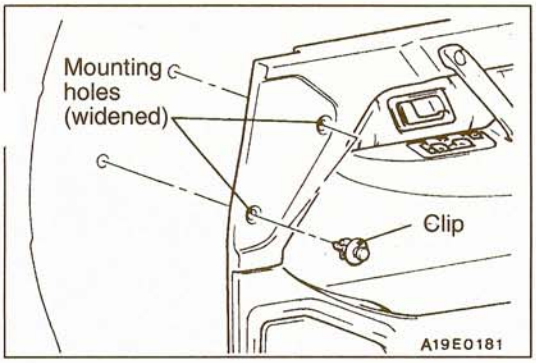


- When installing the type B door trim to the type A door panel
  1) Use a drill or similar tool to widen the mounting holes [6 mm (.24 in.) dia.] in the door trim to 11 mm (.43 in.) in diameter.
  2) Secure using clips.

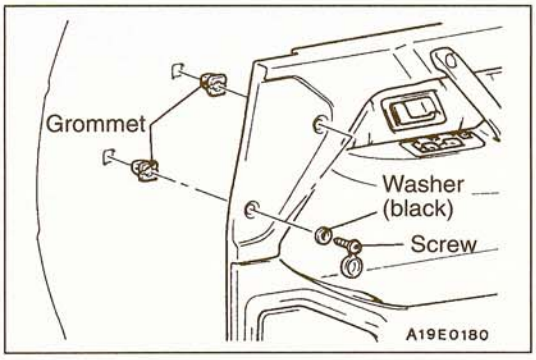


- When installing the type A door trim to the type B door panel
  1) Insert grommet into the square mounting holes in the door panel.
  2) Tighten using black washers and screws, and then cover the screws with the caps.

# DOOR GLASS AND REGULATOR

42900130064

## REMOVAL AND INSTALLATION

**Pre-removal Operation**
- Door Trim and Water proof Film Removal (Refer to P.42-27.)

**Post-installation Operation**
- Door Window Glass Adjustment (Refer to P.42-10.)
- Door Trim and Water proof Film Installation (Refer to P.42-27.)

<Front door>

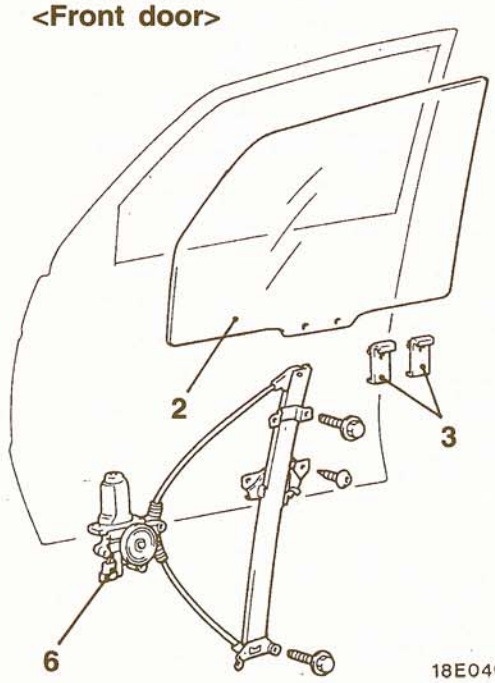


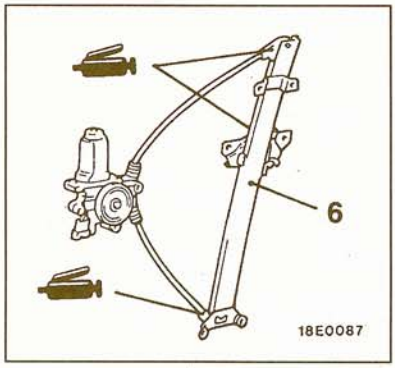


<Rear door>

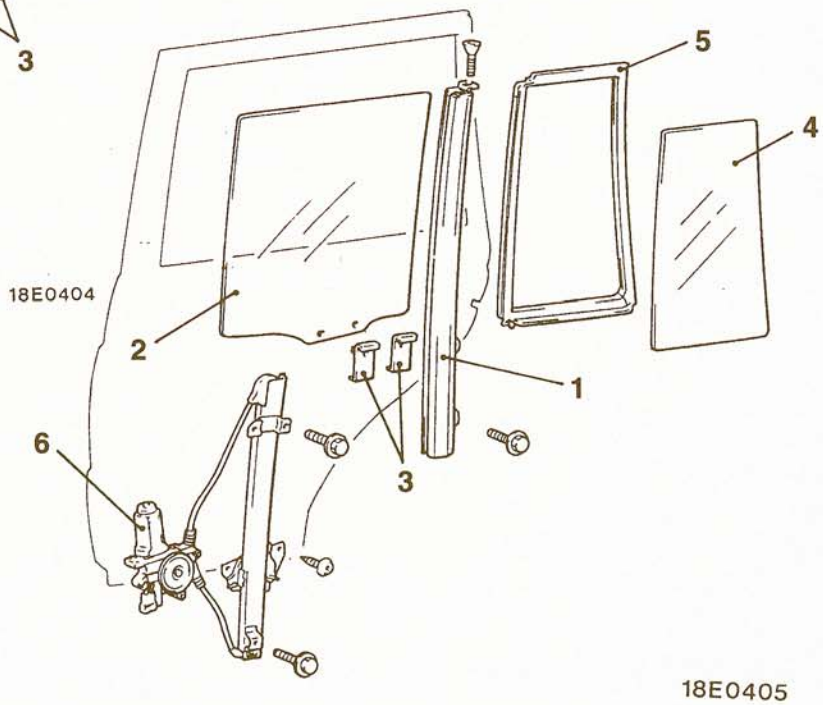


18E0405
00004082

**Removal steps**
- Rear door belt line moulding (Refer to P.42-40.)

1. Rear door center sash
2. Door window glass
3. Door glass holder
4. Stationary window glass
5. Stationary window weatherstrip
6. Window regulator assembly

TSB Revision

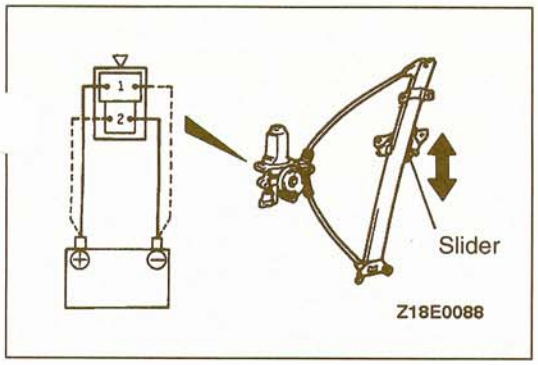


## INSPECTION

42900150039

### POWER WINDOW MOTOR

(1) Check that the slider moves smoothly when the battery is directly connected to the motor terminals.
(2) Check that the slider moves in the opposite direction when the battery is connected with the polarities reversed.

### CIRCUIT BREAKER (INCORPORATED IN THE POWER WINDOW MOTOR)

42900170011

(1) Press the UP switch to fully close the window glass, and continue to press the switch for 10 seconds.
(2) At the moment that the UP switch is released, press the DOWN switch. The circuit breaker can be considered good if at this time the door window glass begins to open within 60 seconds.

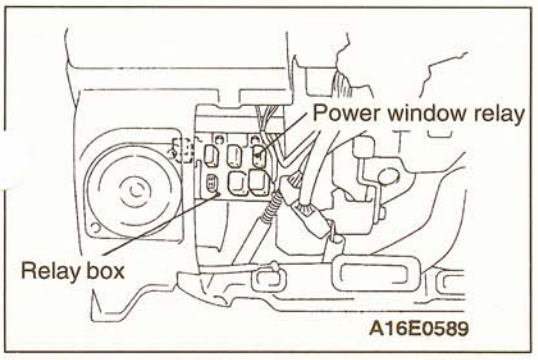


### POWER WINDOW RELAY

42900180014

(1) Remove the power window relay from the relay box.

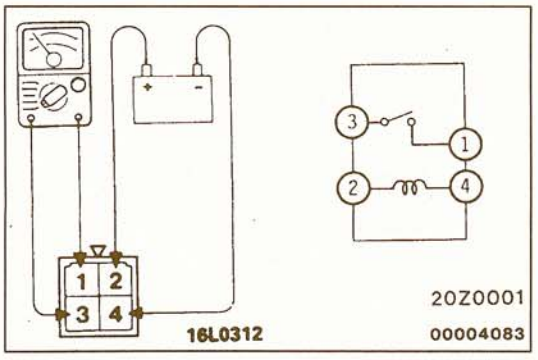


(2) Check for continuity between the terminals.

| | | |
|---|---|---|
| When there is no current | Between terminals (2)–(4) | Continuity |
| | Between terminals (1)–(3) | No continuity |
| When there is current (between terminals (2)–(4)) | Between terminals (1)–(3) | Continuity |

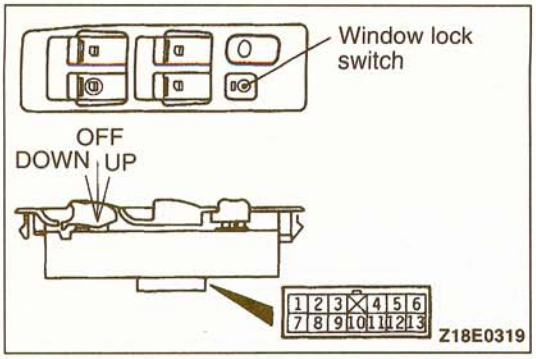


## POWER WINDOW SWITCH

42900160049

Operate the switch and check the continuity between the terminals.

### Main Switch

| Terminal | | Power window switch (normal) | | | Power window switch (lock) | | |
|---|---|---|---|---|---|---|---|
| | | UP | OFF | DOWN | UP | OFF | DOWN |
| Front (Driver's side) | 9 | ○ | | ○ | ○ | | ○ |
| | 2 | ○ | ○ | ○ | ○ | ○ | ○ |
| | 8 | ○ | ○ | ○ | ○ | ○ | ○ |
| | 13 | ○ | ○ | | ○ | ○ | |
| Front (Passenger's side) | 9 | ○ | | ○ | ○ | | ○ |
| | 1 | ○ | ○ | ○ | ○ | ○ | |
| | 7 | ○ | ○ | ○ | | ○ | ○ |
| | 13 | ○ | ○ | | | | |
| Rear (R.H.) | 9 | ○ | | ○ | ○ | | ○ |
| | 5 | ○ | ○ | ○ | ○ | ○ | |
| | 12 | ○ | ○ | ○ | | ○ | ○ |
| | 13 | ○ | ○ | | | | |
| Rear (L.H.) | 9 | ○ | | ○ | ○ | | ○ |
| | 4 | ○ | ○ | ○ | ○ | ○ | |
| | 11 | ○ | ○ | ○ | | ○ | ○ |
| | 13 | ○ | ○ | | | | |

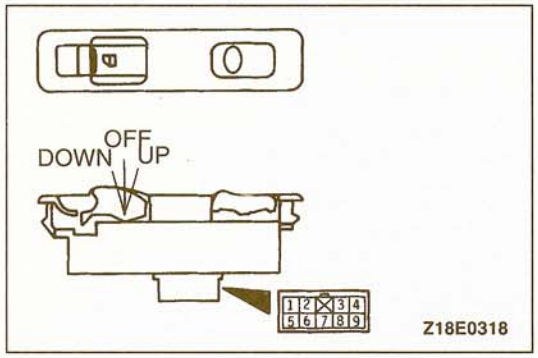


### Sub-switch <Type 1>

| Terminal | | Sub-switch | | |
|---|---|---|---|---|
| | | UP | OFF | DOWN |
| Sub-switch | 1 | | ○ | ○ |
| | 2 | ○ | ○ | |
| | 5 | ○ | ○ | ○ |
| | 6 | ○ | | ○ |
| | 7 | ○ | ○ | ○ |

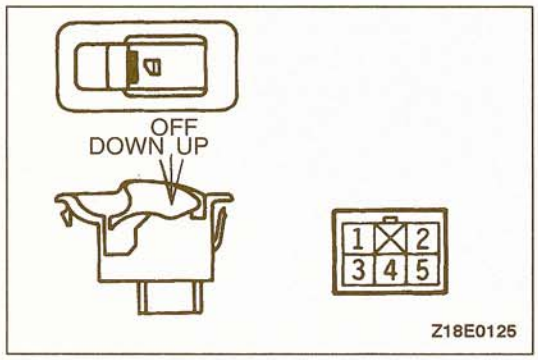


### Sub-switch <Type 2>

| Terminal | | Sub-switch | | |
|---|---|---|---|---|
| | | UP | OFF | DOWN |
| Sub-switch | 1 | ○ | ○ | |
| | 2 | ○ | ○ | ○ |
| | 3 | ○ | ○ | ○ |
| | 4 | ○ | | ○ |
| | 5 | | ○ | ○ |

TSB Revision

# DOOR HANDLE AND LATCH

42300460066

## REMOVAL AND INSTALLATION

<Front door>

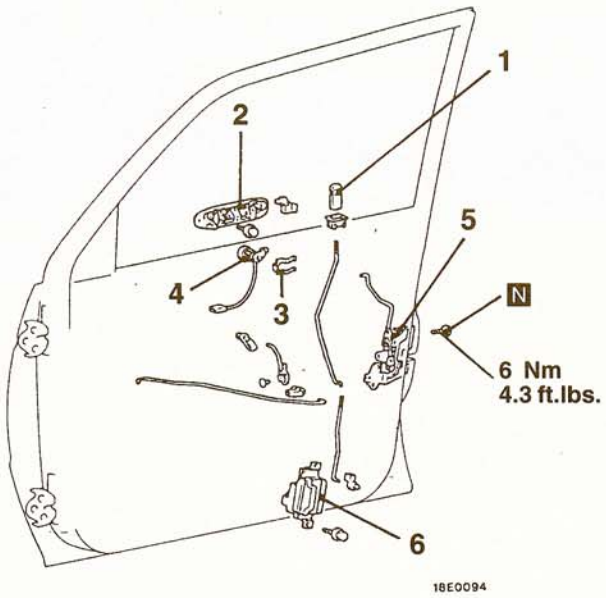


<Rear door>

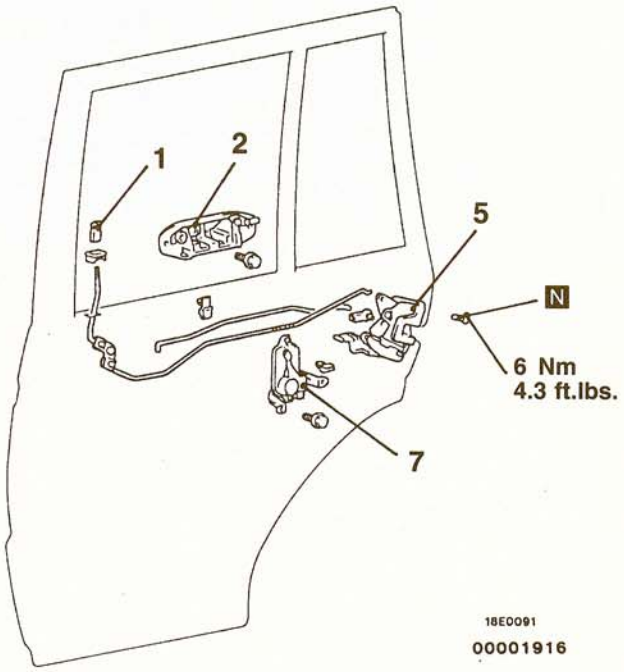


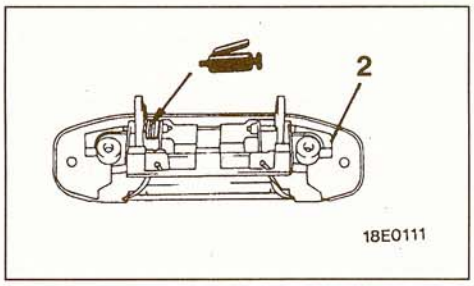


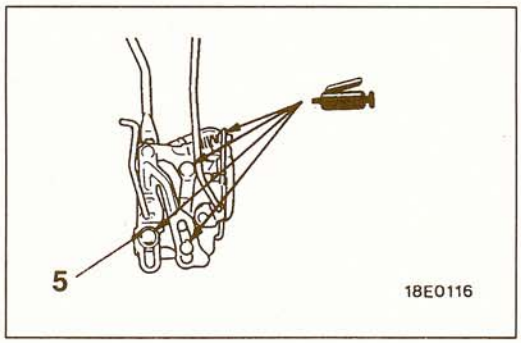


**Removal steps**

- Door trim and waterproof film (Refer to P.42-27.)
- Door outside handle play check (Refer to P.42-10.)

1. Inside lock knob
2. Door outside handle
3. Retainer
4. Door lock key cylinder
5. Door latch assembly
6. Front door lock actuator
7. Rear door lock actuator

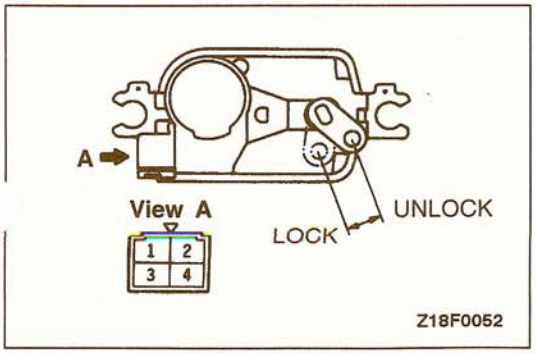


## INSPECTION

42300610041

### FRONT DOOR LOCK ACTUATOR

<L.H.>

(1) After setting the rod to the LOCK position and applying battery positive voltage to terminal (1), check if the rod moves to the UNLOCK position when terminal (3) is grounded.

(2) After setting the rod to the UNLOCK position and applying battery positive voltage to terminal (3), check if the rod moves to the LOCK position when terminal (1) is grounded.

TSB Revision

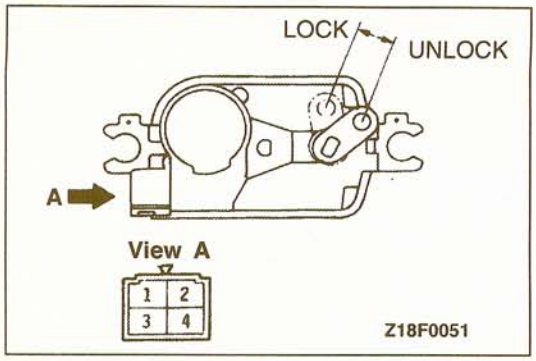


<R.H.>
(1) After setting the rod to the LOCK position and applying battery positive voltage to terminal (3), check if the rod moves to the UNLOCK position when terminal (1) is grounded.
(2) After setting the rod to the UNLOCK position and applying battery positive voltage to terminal (1), check if the rod move to the LOCK position when terminal (3) is grounded.

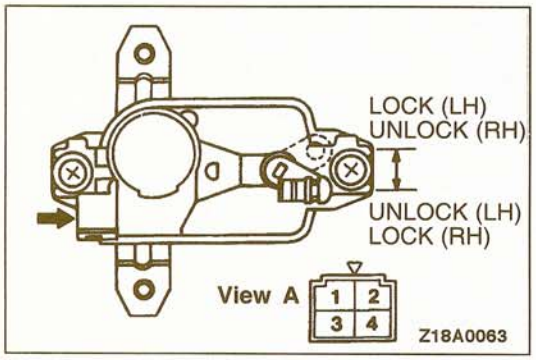


## REAR DOOR LOCK ACTUATOR

42300620037

<L.H.>
(1) After setting the rod to the LOCK position and applying battery positive voltage to terminal (3), check if the rod moves to the UNLOCK position when terminal (1) is grounded.
(2) After setting the rod to the UNLOCK position and applying battery positive voltage to terminal (1), check if the rod moves to the LOCK position when terminal (3) is grounded.

<R.H.>
(1) After setting the rod to the LOCK position and applying battery positive voltage to terminal (1), check if the rod moves to the UNLOCK position when terminal (3) is grounded.
(2) After setting the rod to the UNLOCK position and applying battery positive voltage to terminal (3), check if the rod moves to the LOCK position when terminal (1) is grounded.

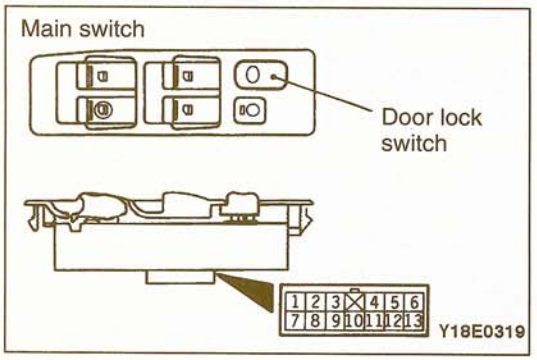


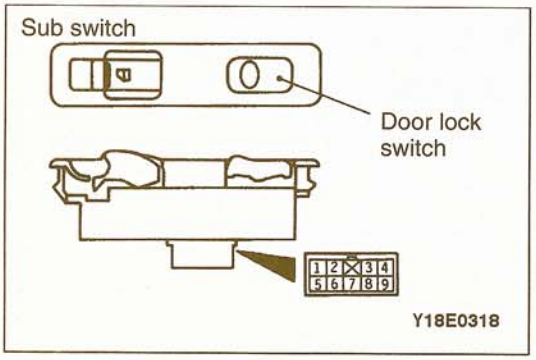


## DOOR LOCK SWITCH

42700120027

(1) Remove the power window switch from the front door.
(2) Operate the switch and check the continuity between the terminals.

### Main switch

| Terminal | Switch position | | |
|---|---|---|---|
| | LOCK | OFF | UNLOCK |
| 3 | ○ | | |
| 6 | | | ○ |
| 13 | ○ | | ○ |

### Sub-switch

| Terminal | Switch position | | |
|---|---|---|---|
| | LOCK | OFF | UNLOCK |
| 3 | | | ○ |
| 8 | ○ | | |
| 9 | ○ | | ○ |

TSB Revision

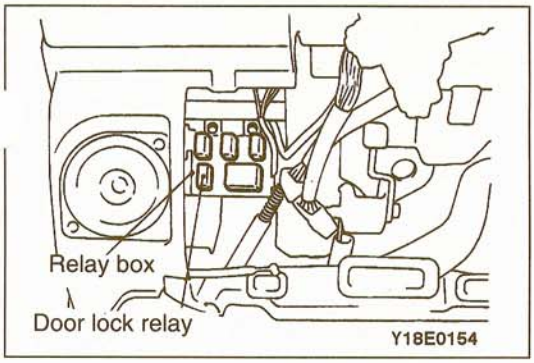


## DOOR LOCK RELAY

42700130013

(1) Remove the door lock relay from the relay box.

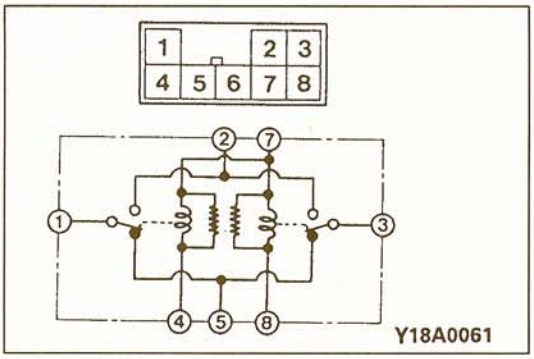


(2) Check for continuity between the terminals under the conditions described below.

| Battery positive voltage | Terminal | | | | | | |
|---|---|---|---|---|---|---|---|
| | 1 | 2 | 3 | 4 | 5 | 7 | 8 |
| Continuity with no voltage | ○ | | ○ | | ○ | | |
| | | | | ○ | | ○ | ○ |
| Continuity with voltage | ○ | ○ | | ⊖ | | ⊕ | |
| | | ○ | ○ | | | ⊕ | ⊖ |

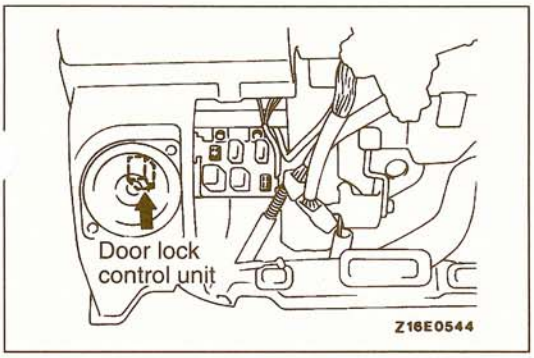


## DOOR LOCK CONTROL UNIT

42300650036

(1) Remove the knee protector. (Refer to GROUP 52A – Instrument Panel.)
(2) Remove the door lock control unit from the relay box.

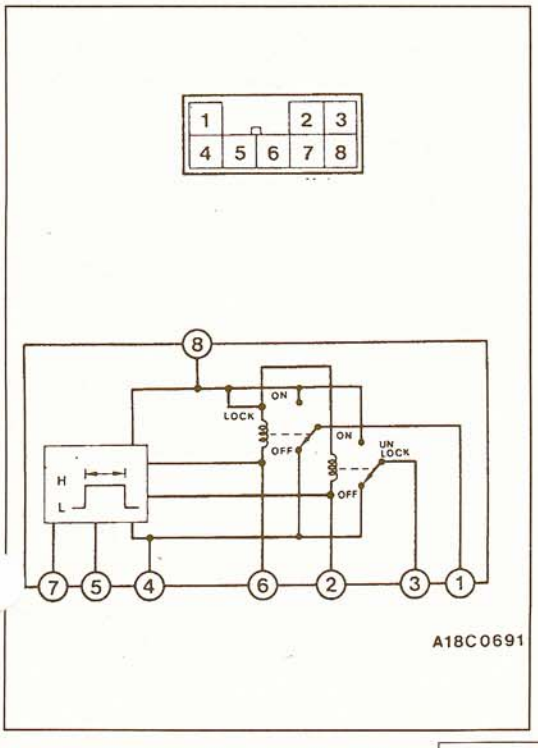


(3) Apply battery voltage to terminals (8).
(4) Perform the following check.
  1) With terminals (4), (5) and (7) grounded,
  Connect a needle-type circuit tester between terminal (3) and the ground, and after switching it to the DCV range, and check if the needle moves at the instant when the connection at terminal (5) or (7) is removed.
  2) With terminals (4) and (5) grounded,
  Connect a needle-type circuit tester between terminal (3) and the ground, and after switching it to the DCV range, and check if the needle moves at the instant when the connection at terminal (7) is grounded.
  3) With terminal (4) grounded,
  Connect a needle-type circuit tester between terminal (3) and the ground, and after switching it to the DCV range, and check if the needle doesn't move when terminal (7) is grounded.
(5) Also, check if there is a voltage of 12V between terminal (6) and the ground, and between terminal (2) and the ground.

NOTE
The reason why the needle of the circuit tester moves in (4) above is because battery voltage appears between terminals (1) and (3) and the ground for approximately 0.5 seconds.

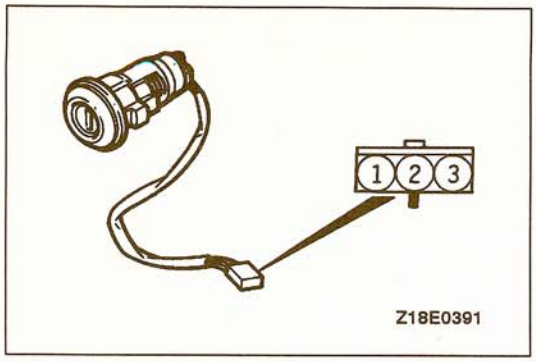


## DOOR LOCK KEY CYLINDER SWITCH

42300630054

| Switch position | Terminal | | |
|---|---|---|---|
| | 1 | 2 | 3 |
| LOCK | ○ | ○ | |
| OFF | | | |
| UNLOCK | | ○ | ○ |

# KEYLESS ENTRY SYSTEM

42800130030

## REMOVAL AND INSTALLATION

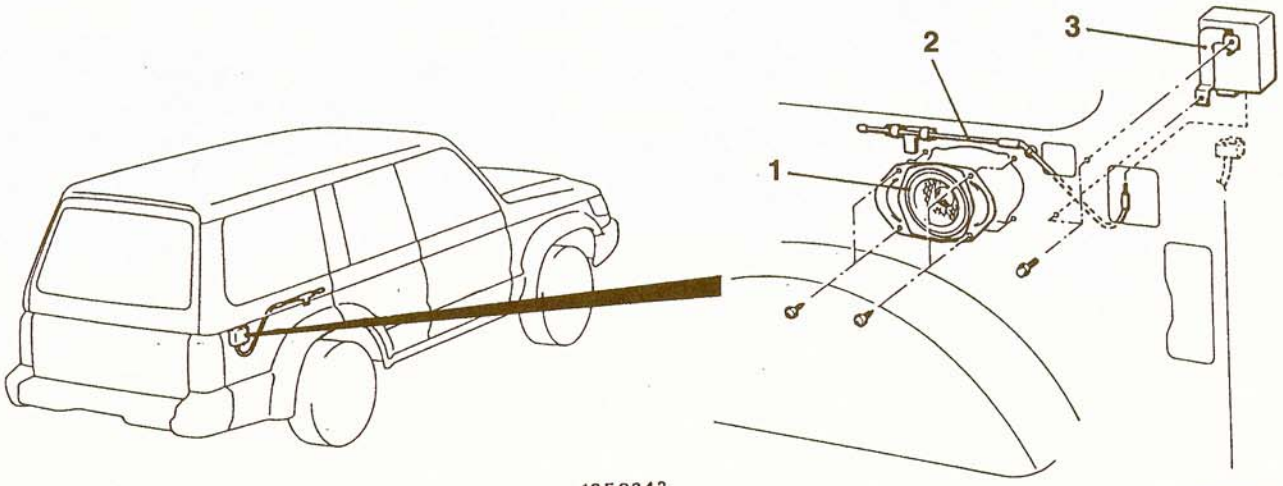


18E0342
00001917

18E0362

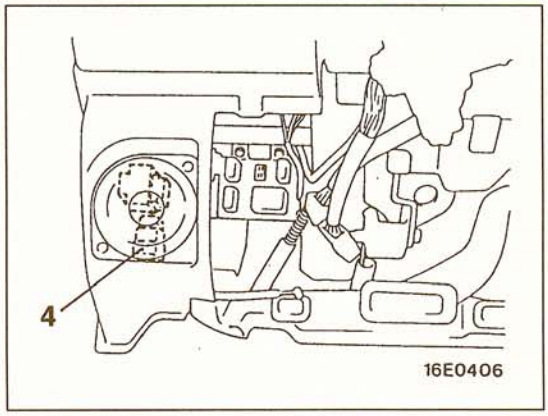


**Keyless entry control unit removal steps**

- Quarter trim lower (Refer to GROUP 52A – Trims.)
- Third seat belt retractor <Vehicles with third seat> (Refer to GROUP 52A – Third Seat belt.)

1. Rear speaker
2. Antenna
3. Keyless entry control unit

**Door lock relay removal steps**

- Knee protector (Refer to GROUP 52A – Instrumental Panel.)

4. Door lock relay

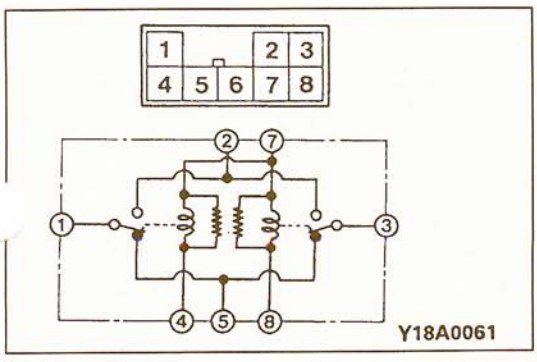


## INSPECTION

42800140026

### DOOR LOCK RELAY

| Battery voltage | Terminal | | | | | | | |
|---|---|---|---|---|---|---|---|---|
| | 1 | 2 | 3 | 4 | 5 | 6 | 7 | 8 |
| Continuity with no voltage | ○ | | ○ | | ○ | | | |
| | | | | ○ | | | ○ | ○ |
| Continuity with voltage | ○ | ○ | | ⊖ | | | ⊕ | |
| | | ○ | ○ | | | | ⊕ | ⊖ |

**TSB Revision**

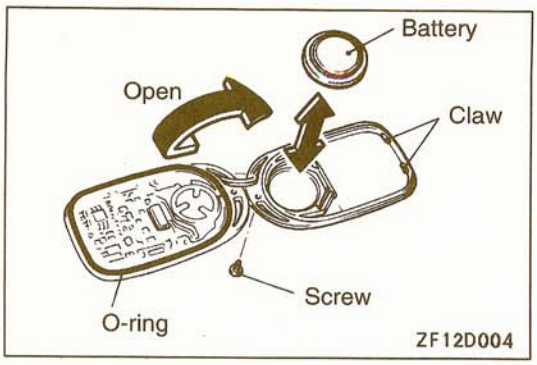


## HOW TO REPLACE A BATTERY OF THE TRANSMITTER

42800090031

1. Remove the set screw to remove the battery from th transmitter.
2. Install a battery with its (+) side face-down.

   **Battery required for replacement: Coin type battery CR2032**

3. Insert the claw first, and with care not to displace the O-ring, assemble the transmitter.

   NOTE
   (1) Do not let water or dust stick to the inside of the transmitter when its open. Also, do not touch the precision electronic device.
   (2) If the O-ring is displaced during the assembly of the transmitter, water or dust penetrates in it, causing trouble.

## METHOD OF REGISTERING A CRYPTOGRAPHIC CODE

42800100031

Since the transmitter is memorized by each individual code, it is necessary to register a code on EEPROM in the control unit if the transmitter or control unit is replaced, or cause of the trouble is presumed to be due to faulty registration of the code. Since two different codes at the most can be memorized in the memory space of EEPROM, the old code will become unable to be used if the following registration operation is repeated twice. Meanwhile, register a code afte confirming that an ordinary door lock function can be worked through key operation.

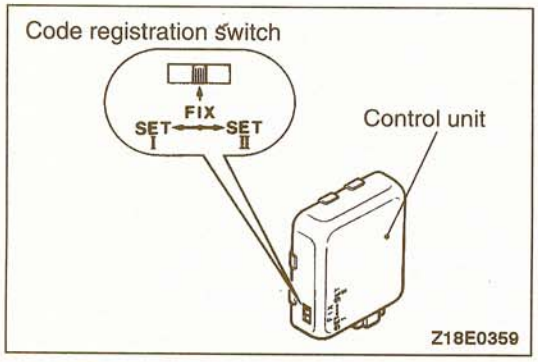


### WHEN NOT USING THE SCAN TOOL

(1) Set the code registration switch of the control unit to SET I (registration mode side).

(2) Push the LOCK or UNLOCK switch of transmitter.

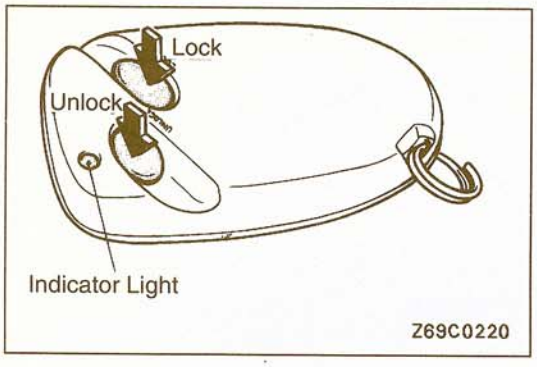


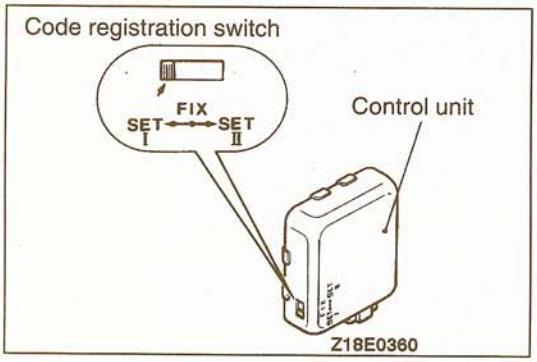


(3) Set the code registration switch of the control unit to FIX (operation mode) side.
(4) Confirm that the keyless entry system operates normally. The registration is completed, if operates normally. If not, repeat (1) – (3).

NOTE
1 Confirm that after a code has been registered th registration switch is surely set to FIX.
2 In case there are two transmitters, register a code on SET II side in the same manner as SET I.

**TSB Revision**

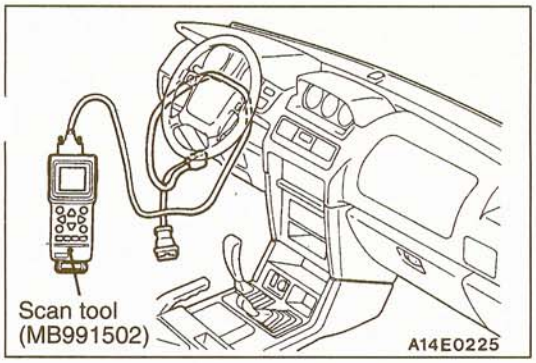


### WHEN USING THE SCAN TOOL

(1) Connect the scan tool to the data link connector.

NOTE
At this moment, No. 1 terminal of the data link connector becomes grounded and a code is ready to be registered.

**Caution**
**Turn off the ignition switch before connecting or disconnecting the scan tool.**

(2) Close all doors.
(3) Set the ignition switch to ACC and return it to OFF.

NOTE
At this moment, the door operates, lock and unlock, once, then it becomes registration mode.

(4) After pressing any switch on the transmitter once, press it two more times within 10 seconds to register the same code for SET I and SET II.
(5) After registration is completed, the door lock operates, lock and unlock, once.

NOTE
If there are two transmitters, carry out the registration within 10 seconds in the same manner as the first registration. In addition, the second registration shall be done within a minute.

(6) After the second registration is completed, the door lock operates, lock and unlock, once.
(7) Registration mode finishes under the following conditions.
- Registration of two transmitter codes are completed.
- One minute has passed since the registration mode setting.
- Scan tool connection is disconnected. (ground mode is released.)
- Ignition switch is turned ON.
- Any of the doors are opened.

# WINDOW GLASS RUNCHANNEL AND DOOR OPENING WEATHERSTRIP

42300310064

## REMOVAL AND INSTALLATION

<Front door>

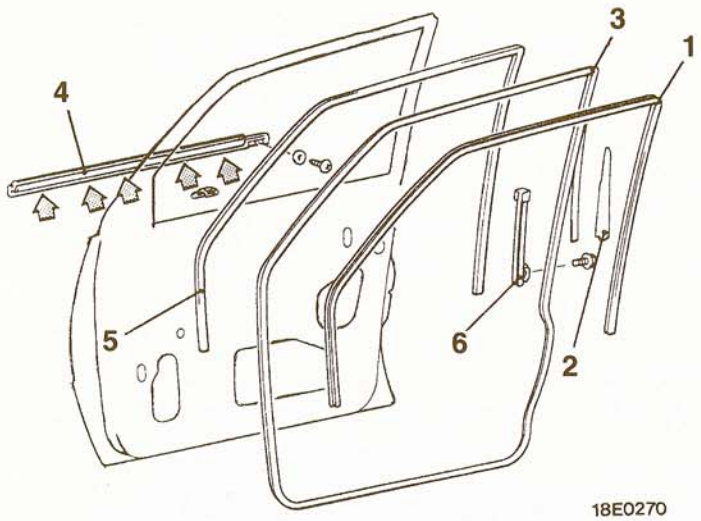


18E0270

<Rear door>

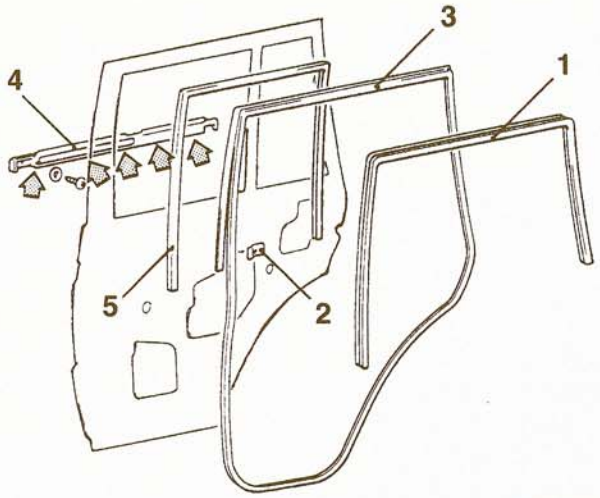


18E0269

NOTE
◁: Indicates the clip positions

00001918

1. Door inner opening weatherstrip

**Door outer opening weatherstrip removal steps**

2. Weatherstrip protector
◀A▶ ▶A◀ 3. Door outer opening weatherstrip

**Belt line moulding removal steps**

- Door mirror
  (Refer to GROUP 51 – Door Mirror.)

4. Belt line moulding

**Window glass runchannel removal steps**

- Door window glass (Refer to P.42-30.)

5. Window glass runchannel
6. Lower rear sash

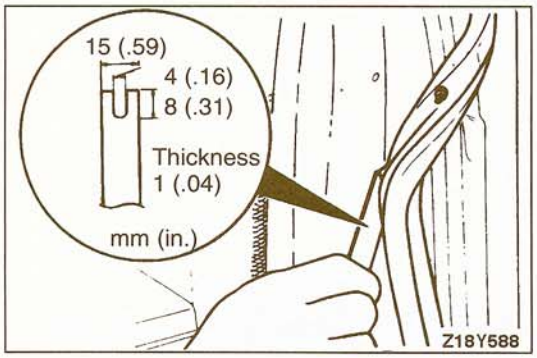


Z18Y588

## REMOVAL SERVICE POINT

### ◀A▶ DOOR OUTER OPENING WEATHERSTRIP REMOVAL

Make a tool as shown in the illustration to remove the door opening weatherstrip.

## INSTALLATION SERVICE POINT

### ▶A◀ DOOR OUTER OPENING WEATHERSTRIP INSTALLATION

The clip color identifies the left and right weatherstrips, so be sure to use the colors so as to install correctly.

| Identification color | Applicable side |
|---|---|
| White | Left door |
| Brown | Right door |

TSB Revision

# BACK DOOR ASSEMBLY

42300520016

## REMOVAL AND INSTALLATION

**Back Door Post-installation Operation**
- Back Door Adjustment (Refer to P.42-10.)

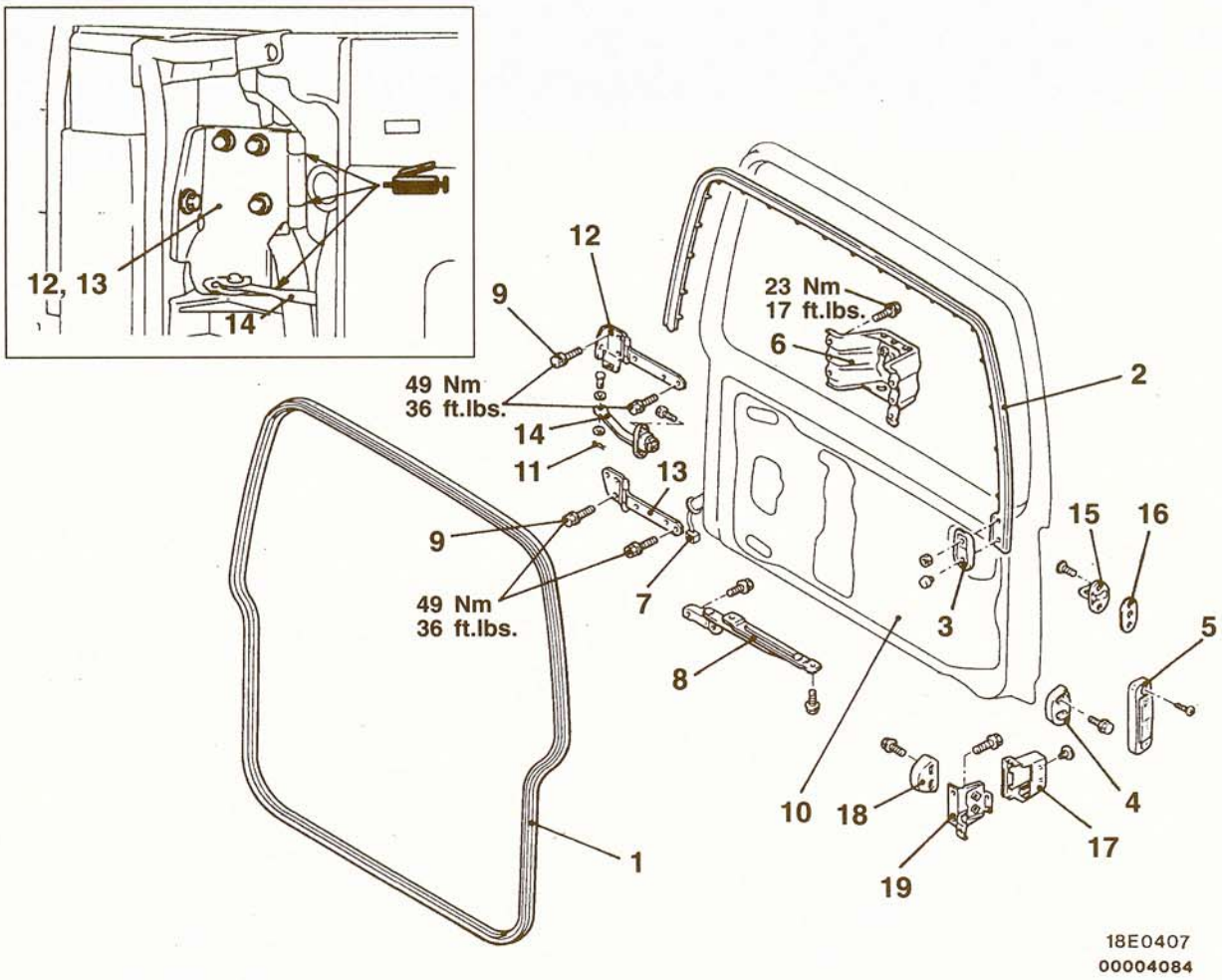


18E0407
00004084

◀A▶

1. Inner opening weatherstrip
2. Outer opening weatherstrip
3. Weatherstrip plate
4. Bumper rubber
5. Reflex reflector
6. Spare tyre carrier

**Back door removal steps**

7. Harness connector
8. Back door stopper
9. Hinge attaching bolt
10. Back door

**Hinge removal steps**

- Back door trim and waterproof film (Refer to P.42-42.)

10. Back door
11. Split pin
12. Upper hinge
13. Lower hinge

**Door check strap removal steps**

- Back door trim and waterproof film (Refer to P.42-42.)

11. Split pin
14. Door check strap

**Striker removal steps**

15. Striker
16. Shim

**Back door bumper bracket removal steps**

17. Back door bumper cover
18. Back door bumper female
    - Rear combination light (Refer to GROUP 54 – Rear combination light.)
19. Back door bumper bracket

**TSB Revision**

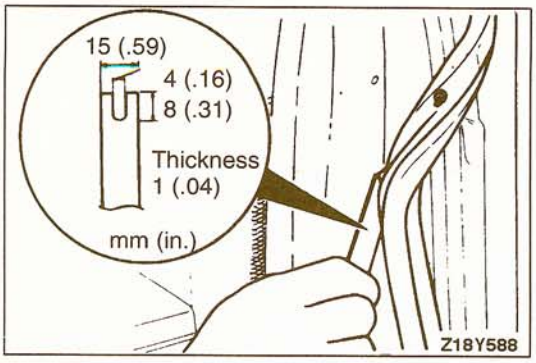


### REMOVAL SERVICE POINT

#### ◀A▶ OUTER OPENING WEATHERSTRIP REMOVAL

Make a tool as shown in the illustration to remove the outer opening weatherstrip.

## BACK DOOR TRIM AND WATERPROOF FILM

42300550015

### REMOVAL AND INSTALLATION

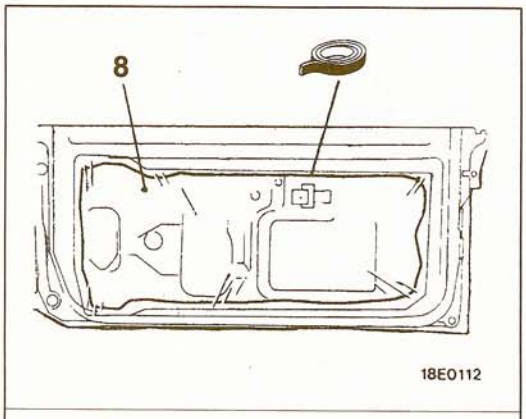


**Sealant:**
**3M ATD Part No. 8625 or equivalent**

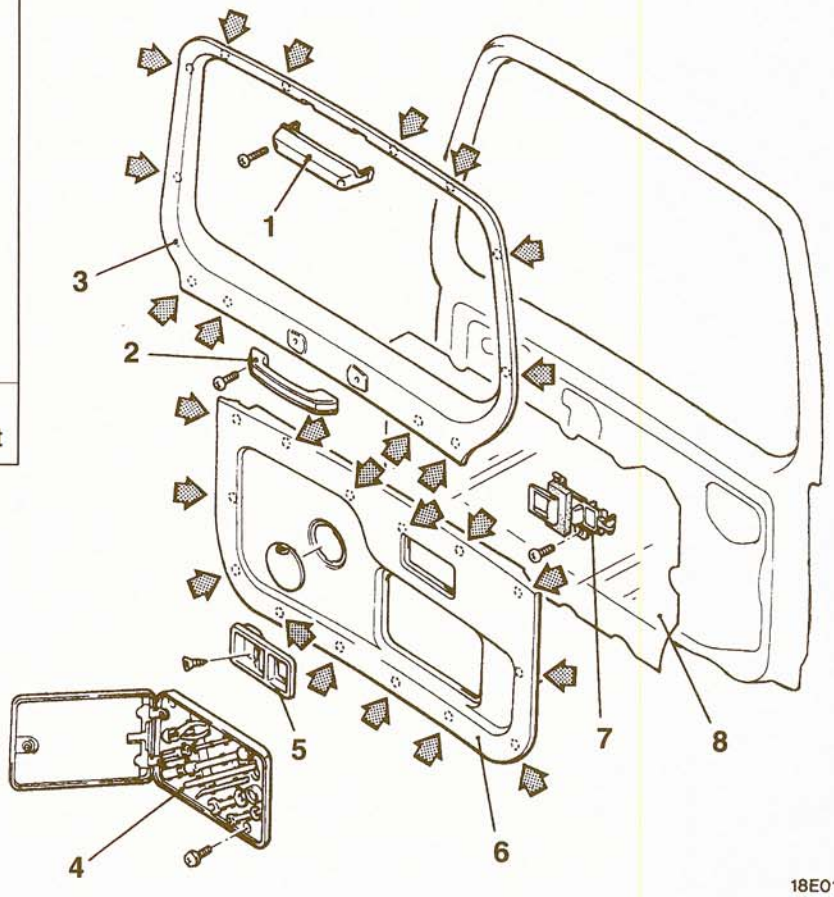


00001920

NOTE
◀ : Indicates the clip positions

**Removal steps**

1. Cover
2. Door pull handle
3. Back door upper trim
4. Tool box lid assembly
5. Inside handle cover
6. Back door trim
7. Inside handle
8. Waterproof film

TSB Revision

# BACK DOOR HANDLE AND LATCH

42300580014

## REMOVAL AND INSTALLATION

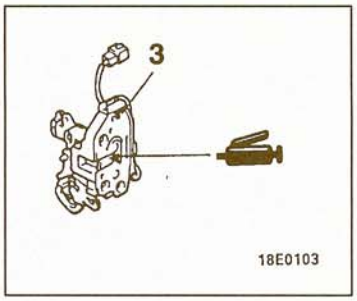


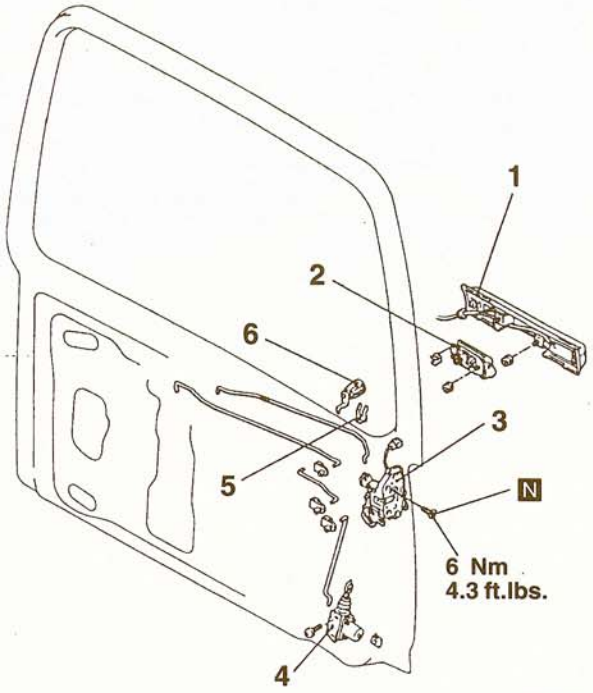


**Removal steps**

- Back door trim and waterproof film (Refer to P.42-42.)
- Door outside handle play check (Refer to P.42-10.)

1. License plate light garnish
2. Door outside handle
3. Back door latch assembly
4. Back door lock actuator
5. Retainer
6. Back door key cylinder

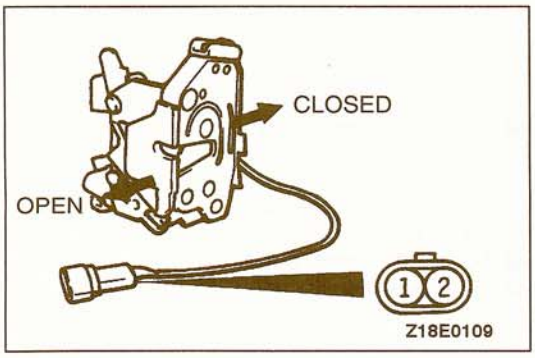


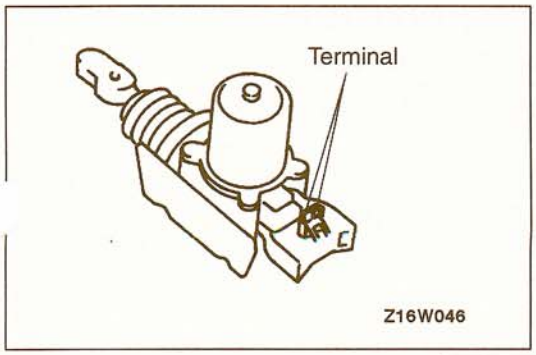


## INSPECTION

42300590017

### LATCH SWITCH

Check the continuity between the terminals when the latch is moved.

| Latch position | Terminal | |
|---|---|---|
| | 1 | 2 |
| OPEN | ○ | ○ |
| CLOSED | | |

### BACK DOOR LOCK ACTUATOR

Connect the battery to the actuator terminal, and check that the shaft operates. If the shaft moves in the opposite direction when the connection polarity is changed, the actuator can be considered normal.

**TSB Revision**

# SUNROOF

42600120055

## REMOVAL AND INSTALLATION

**Post-installation Operation**
- Water Test (Refer to P.42-11.)

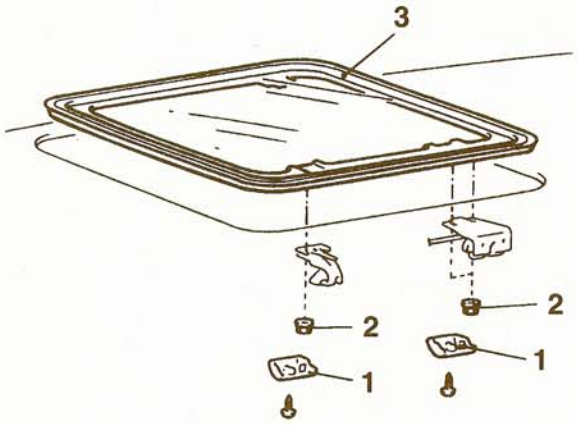


18W148

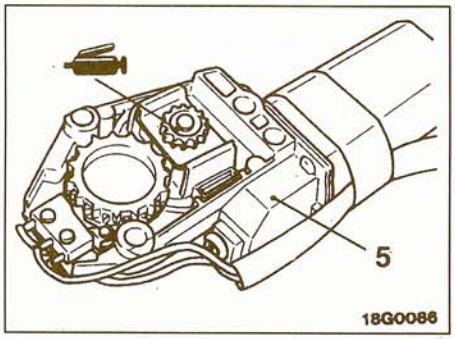


18G0086

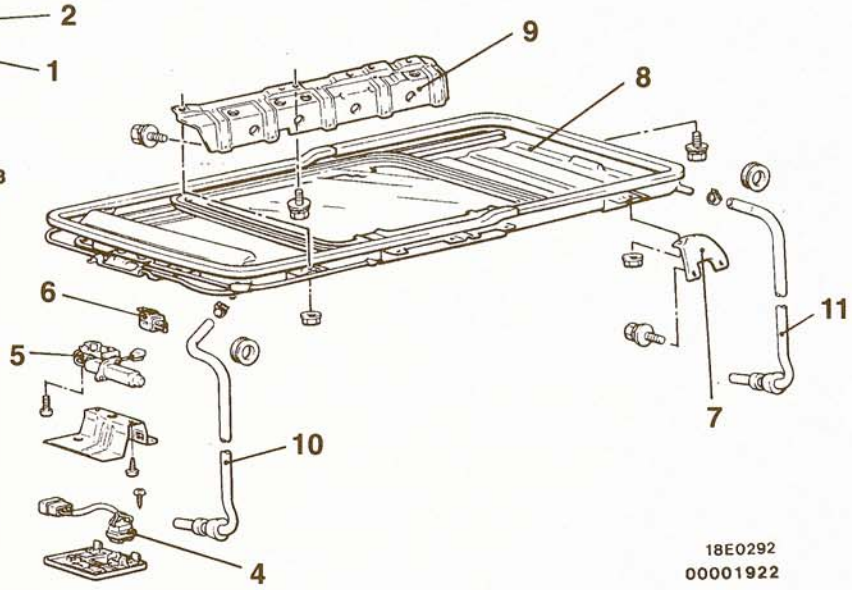


18E0292
00001922

**Sunroof glass removal steps**
1. Decoration cover
2. Nuts
3. Sunroof glass assembly

**Sunroof assembly removal steps**
4. Sunroof switch
- Headlining
  (Refer to GROUP 52A – Headlining.)

◀A▶ ▶B◀ 5. Motor assembly
6. Control unit
7. Rear set bracket
8. Sunroof assembly
9. Front set bracket
◀B▶ ▶A◀ 10. Front drain hose
◀B▶ ▶A◀ 11. Rear drain hose

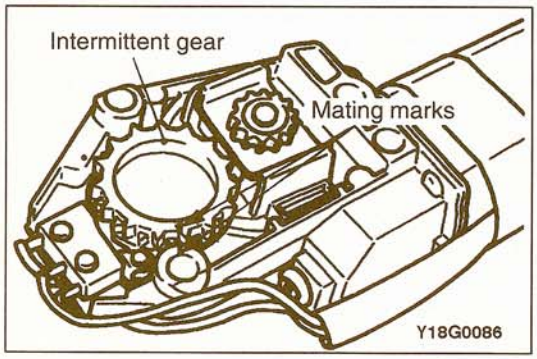


Y18G0086

## REMOVAL SERVICE POINTS

### ◀A▶ MOTOR ASSEMBLY REMOVAL

(1) Close the sunroof fully and remove the motor.

NOTE
If the sunroof does not move, make mating marks on the roof lid and the guide rail.

(2) Make mating marks on the motor intermittent gear and bracket.

**TSB Revision**

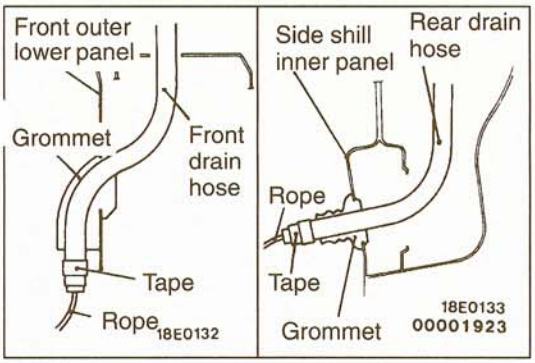


### ◀B▶ FRONT DRAIN HOSE/REAR DRAIN HOSE REMOVAL

Tie a rope to the end of the drain hose, wind a tape around it so that there is no unevenness, and pull the drain hose into the inside of the passenger compartment.

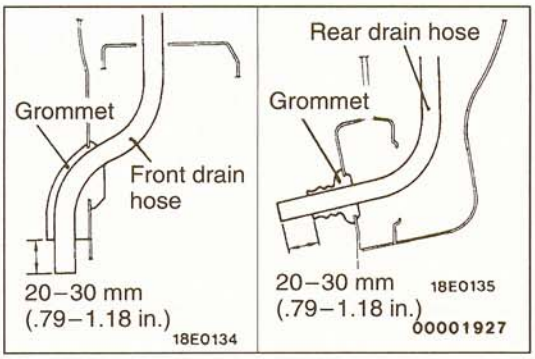


## INSTALLATION SERVICE POINTS

### ▶A◀ REAR DRAIN HOSE/FRONT DRAIN HOSE INSTALLATION

(1) Tie the rope that was used during removal to the end of the drain hose, and wind tape around it so that there is no unevenness.
(2) Pull the rope to pull the drain hose through.
(3) Pull the drain hose until the protruding length from the grommet is as shown in the illustration.

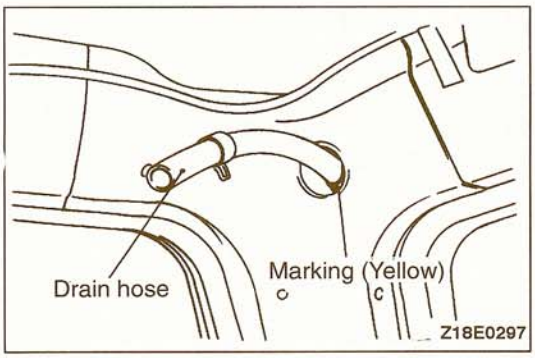


(4) Align the rear drain hose (R.H.) with the body hole so that the hose marking is at the bottom.

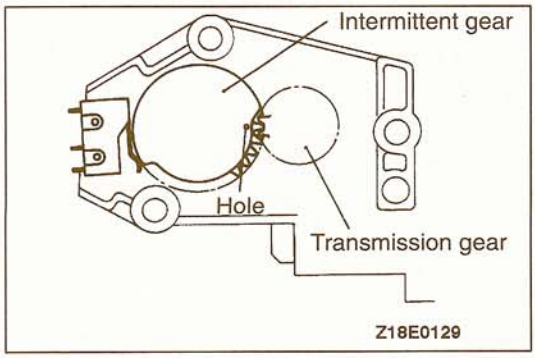


### ▶B◀ MOTOR ASSEMBLY INSTALLATION

When replacing the motor assembly, open the sunroof glass approximately 200 mm (7.9 in.), set the hole of the intermittent gear so that it is aligned between the teeth of the motor assembly transmission gear, and then install the motor assembly.

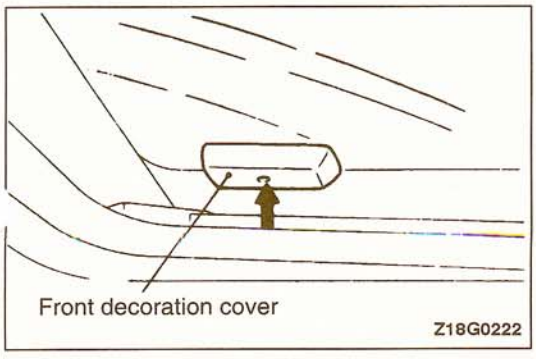


## INSPECTION

42600130034

### SUNROOF SLIDING RESISTANCE

(1) Remove the front decoration covers.
(2) Remove the front guide front nut.
(3) Remove the motor assembly.
(4) Fasten the string.

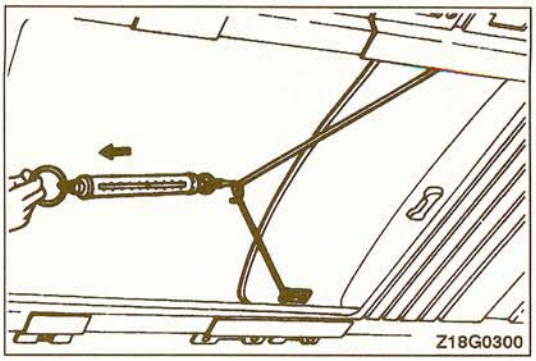


(5) Measure the sunroof drive resistance with a spring scale.

**Standard value: 196 N (44 lbs.) or less**

(6) If the resistance exceeds the standard value, check the following.
1) Guide rail installation
2) Defective or worn guide bracket
3) Seized drive cable
4) Malfunction of drive tube

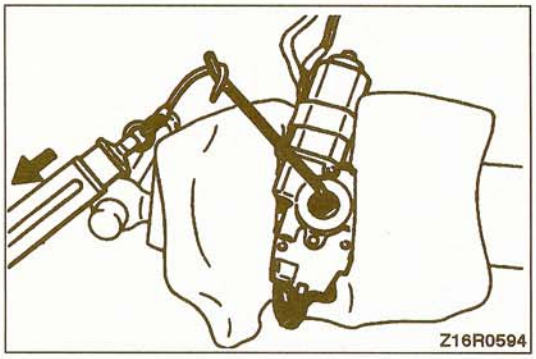


## CLUTCH SLIP FORCE

Check the sliding force of the clutch by the following procedure.

(1) Place the hexagonal wrench from the special tools into hexagonal socket of the motor drive shaft, and use a spring balance to measure the force when the motor clutch starts to slip.

**Standard value: 39–49 N (9–11 lbs.)**

**Caution**
1. **Keep the spring balance to the wrench at a right angle.**
2. **Always use the wrench in the special tools, or the value for the clutch sliding force will be different.**

(2) If the clutch sliding force is not within the standard value, turn the motor adjusting nut to the left or right to adjust.

(3) After adjusting, tighten the adjusting nut securely with the lock washer.

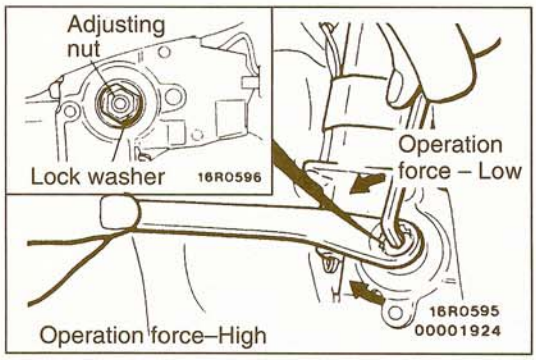


## MOTOR

Check the direction of rotation of the drive gear when the connector is connected to the battery.

| Terminal (1) | Terminal (3) | Drive gear rotation direction |
|---|---|---|
| + | – | Right |
| – | + | Left |

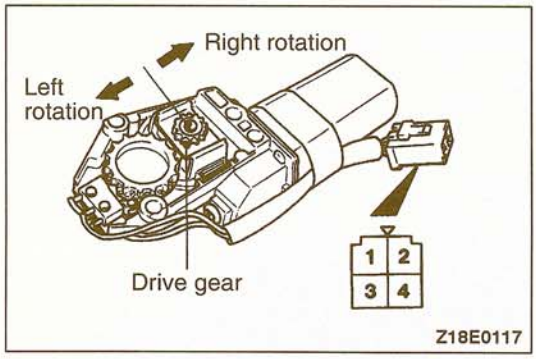


## LIMIT SWITCH

Turn over the motor and check the continuity at each of the limit switch terminals.

| Switch | Terminal | |
|---|---|---|
| | 2 | 4 |
| ON | | |
| OFF | ○ | ○ |

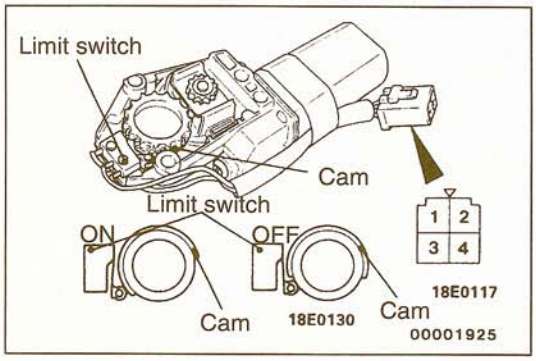

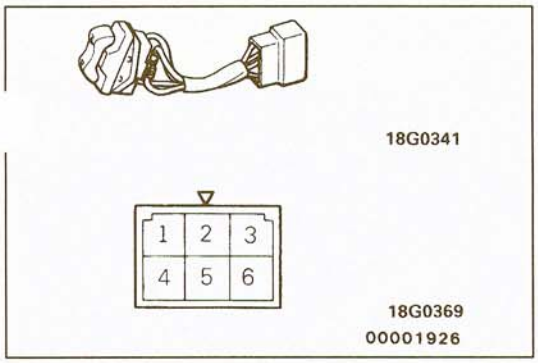


## SUNROOF SWITCH

Operate the sunroof switch and check the continuity between the terminals.

| Switch | Terminal | | | | |
|---|---|---|---|---|---|
| | 1 | 2 | 3 | 5 | 6 |
| OPEN | ○ | ○ | | ○ | ○ |
| OFF | | ○ | ○ | ○ | ○ |
| CLOSED | ○ | ○ | ○ | ○ | |

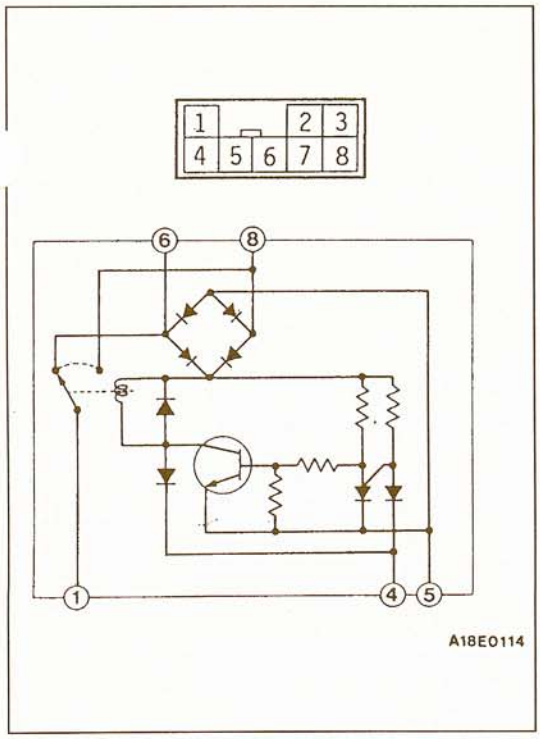


## CONTROL UNIT

Check for continuity between the terminals under the conditions described below.

| Battery positive voltage | Terminal | | | | |
|---|---|---|---|---|---|
| Battery positive voltage | 1 | 8 | 6 | 5 | 4 |
| When there is no current | ○ ⊕ ⊖ | ⊕ ⊖ | ○ ⊕ ⊖ | ⊖ | ⊕ |
| When there is current | ○ | ○ ⊕ ⊖ | ⊖ ⊕ | | |

NOTE

⊕—⊖ indicate that there is continuity when the positive battery terminal is connected to the tester plus terminal, and the negative battery terminal is connected to the tester minus terminal.

## DISASSEMBLY AND REASSEMBLY

42600140044

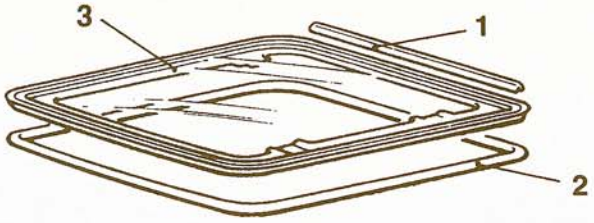


18W937

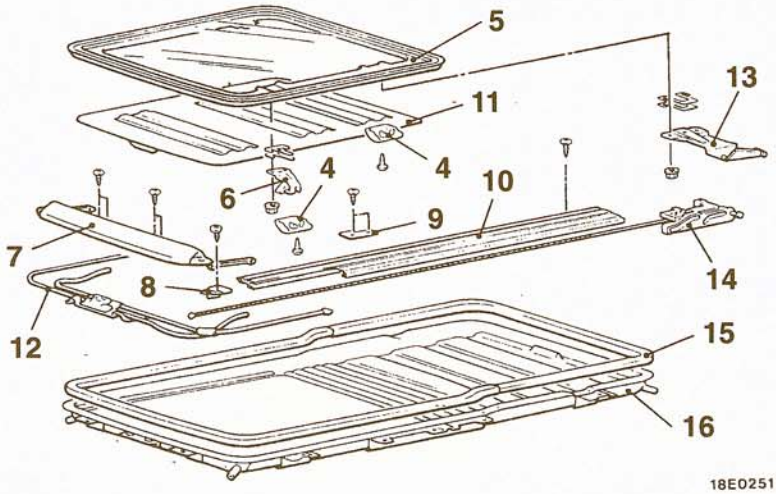


18E0251

00001949

**Sunroof glass disassembly steps**

1. Screen drip
2. Weatherstrip
3. Sunroof glass

**Sunroof assembly disassembly steps**

4. Decoration cover
5. Sunroof glass assembly
6. Front guide bracket
7. Deflector assembly
8. Rail end cover
9. Set plate
10. Guide rail assembly
11. Sun shade
12. Drive tube
13. Lifter assembly
14. Slider assembly
15. Sealing tape
16. Housing assembly

## LUBRICATION AND SEALING POINTS

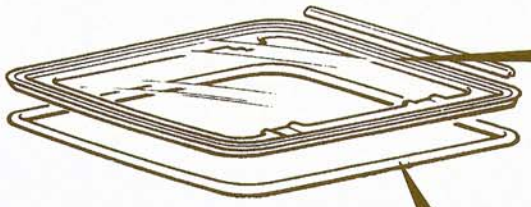


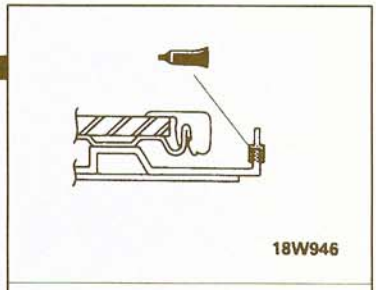


**Adhesive:**
**3M ATD Part No. 8001, or 3M ATD Part No. 8011, or equivalent**

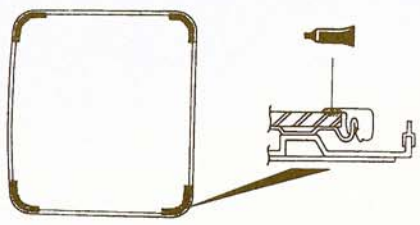


▨ : Adhesive application locations

**Adhesive:**
**3M ATD Part No. 8001 or 3M ATD Part No. 8011, or equivalent**

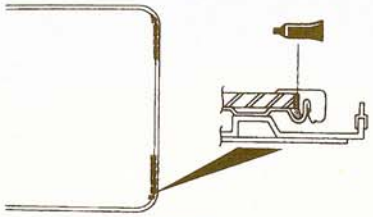


▨ : Sealant application locations

**Sealant:**
**3M ATD Part No. 8531 or 3M ATD Part No. 8509, or equivalent**

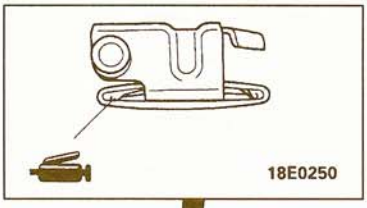


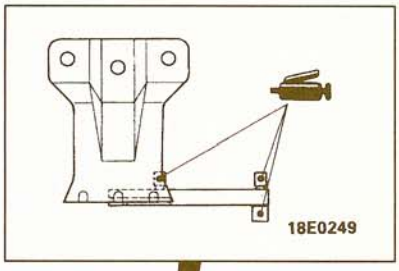


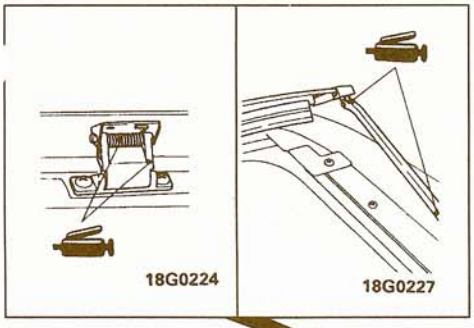


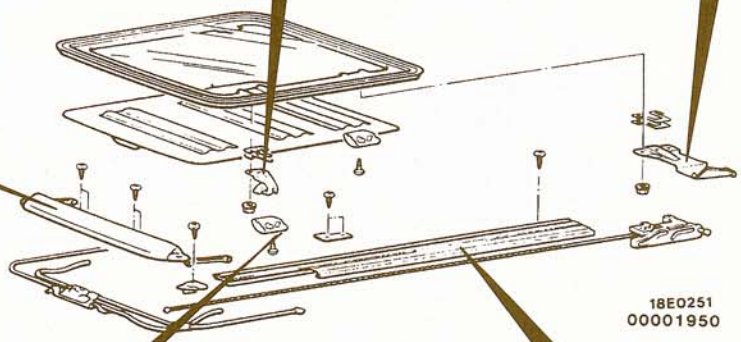


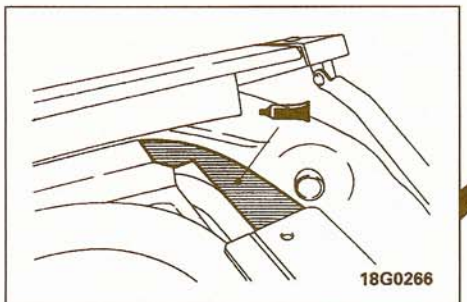


**Sealant:**
**3M ATD Part No. 8531 or 3M ATD Part No. 8646, or equivalent**

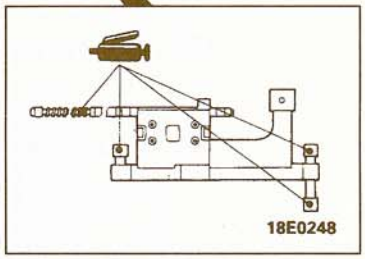


TSB Revision

NOTES

# EXTERIOR

## CONTENTS

51109000050


DOOR MIRROR ..... 21
FRONT BUMPER ..... 4
GARNISHES AND MOULDINGS ..... 6
GENERAL SPECIFICATIONS ..... 2
HEADLIGHT WASHER ..... 18
REAR BUMPER ..... 5
REAR WIPER AND WASHER ..... 15
SEALANTS AND ADHESIVES ..... 3
SERVICE SPECIFICATIONS ..... 3
SIDE GARNISH AND WIDE FENDER ..... 8
WINDSHIELD WIPER AND WASHER ..... 12

# GENERAL SPECIFICATIONS

51100020017

Windshield wiper motor

| Items | | Specifications |
|---|---|---|
| Revolution speed at load of 1 Nm (0.72 ft.lbs.) rpm | Low speed | 48±4 |
| | High speed | 70±7 |
| Nominal torque Nm (ft.lbs.) | | 21 (15) |
| No-load current A | | 3.7 or less |

Windshield wiper blade

| Items | | Specifications |
|---|---|---|
| Wiping angle | Driver's side | 85° |
| | Passenger's side | 109° |
| Wiper blade length mm (in.) | Driver's side | 475 (18.7) |
| | Passenger's side | 475 (18.7) |

Windshield washer motor and pump

| Items | | Specifications |
|---|---|---|
| Motor type | | Direct current ferrite magnet type |
| Pump type | | Centrifugal type |
| Power consumption A | | 4 or less |
| Time of continuos use sec. | With washer fluid | Max. 60 |
| | Empty operation | Max. 20 |
| Nozzle jet pressure kPa (psi) | | 110 (15.6) or more |
| Tank capacity $dm^3$ (qts.) | | 3.0 (3.1) or more |

Rear wiper motor

| Items | Specifications |
|---|---|
| Revolution speed at load of 0.6 Nm (0.43 ft.lbs.) rpm | 38±5 |
| Nominal torque Nm (ft.lbs.) | 10 (7) |

Rear wiper blade

| Items | Specifications |
|---|---|
| Wiping angle | 102° |
| Wiper blade length mm (in.) | 375 (14.8) |

Rear window washer motor and pump

| Items | | Specifications |
|---|---|---|
| Motor type | | Direct current ferrite magnet type |
| Pump type | | Centrifugal type |
| Power consumption A | | 3.8 or less |
| Time of continuous use sec. | With washer fluid | Max. 60 |
| | Empty operation | Max. 20 |
| Nozzle jet pressure kPa (psi) | | 120 (17) or more |
| Tank capacity $dm^3$ (qts.) | | 1.4 (1.5) or more |

**TSB Revision**

Intermittent wiper relay

| Items | Specifications |
|---|---|
| ntermittent interval sec. | 8±2 |

Headlight washer motor and pump

| Items | Specifications |
|---|---|
| Motor type | Direct current ferrite magnet type |
| Pump type | Centrifugal type |
| Rated current A | 21 or less |
| Nozzle injection pressure kPa (psi) | 180 (25.6) or more |
| Tank capacity $dm^3$ (qts.) | 3.7 (3.9) or more |

Check valve

| Items | Specifications |
|---|---|
| Valve opening and closing pressure kPa (psi) | 50–110 (7.1–15.6) |

Headlight washer relay

| Items | Specifications |
|---|---|
| Timer operation time sec. | 0.33 |

## SERVICE SPECIFICATIONS

51100030058

| Items | | Standard value |
|---|---|---|
| Windshield wiper blade installation position mm (in.) | Driver's side | 25–35 (.98–1.38) |
| | Passenger's side | 35–45 (1.38–1.77) |
| Rear wiper blade installation position mm (in.) | | 65–75 (2.56–2.95) |

## SEALANTS AND ADHESIVES

51100050054

| Items | Specifications |
|---|---|
| Back door lower garnish | 3M ATD Part No. 6382 or equivalent |
| Back door corner garnish | |
| License plate garnish | |
| Side garnish | |
| Wide fender | |

# FRONT BUMPER

51100140058

## REMOVAL AND INSTALLATION

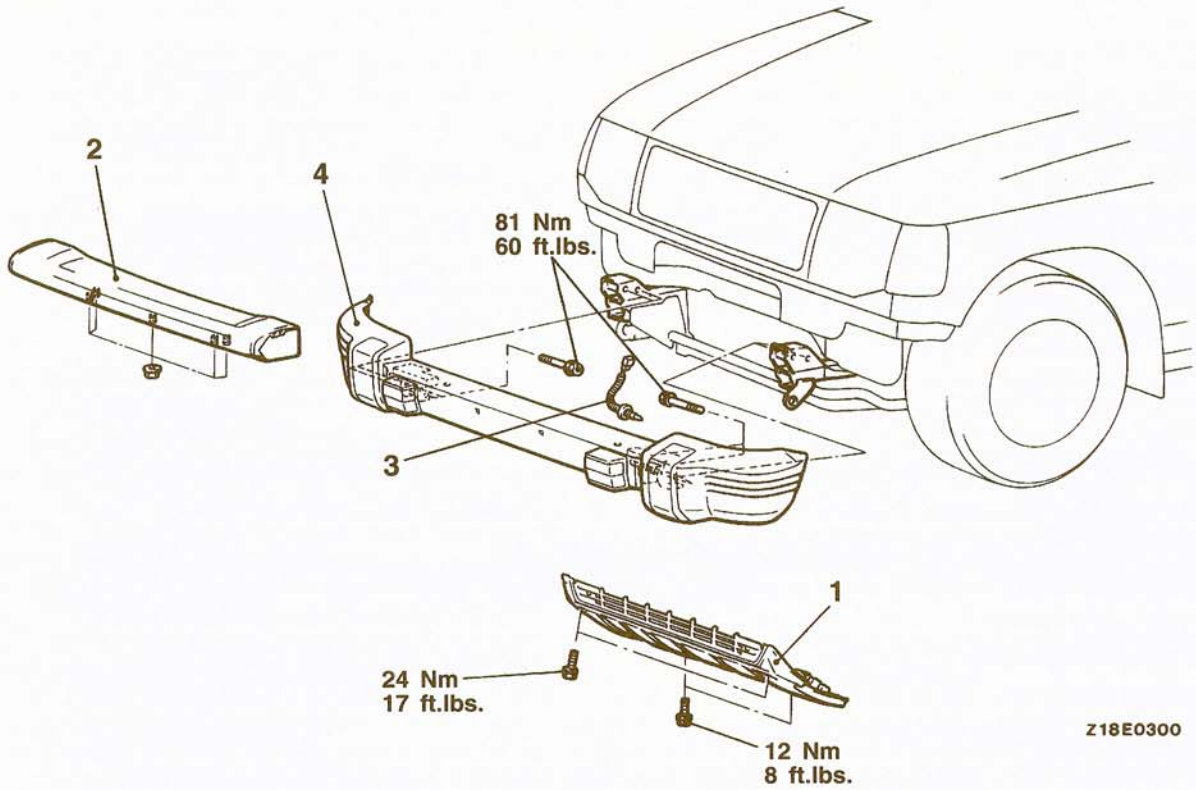


**Removal steps**

1. Skid plate
2. Bumper garnish
3. Outside temperature sensor
   <Vehicles with Multi-meter>
▶A◀ 4. Bumper assembly

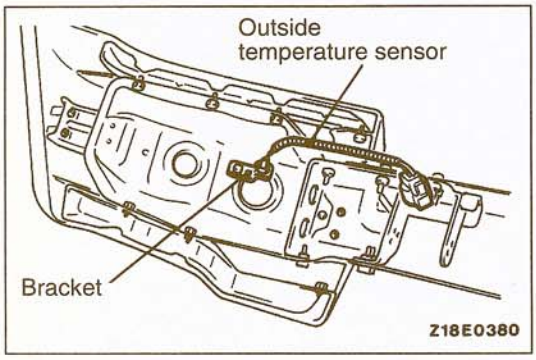


## INSTALLATION SERVICE POINT

### ▶A◀ BUMPER ASSEMBLY INSTALLATION

**<Vehicles with Multi-meter>**

When installing the bumper assembly, insert the sensor section of the outside temperature sensor into the bracket hole installed.

TSB Revision

## DISASSEMBLY AND REASSEMBLY

51100160061

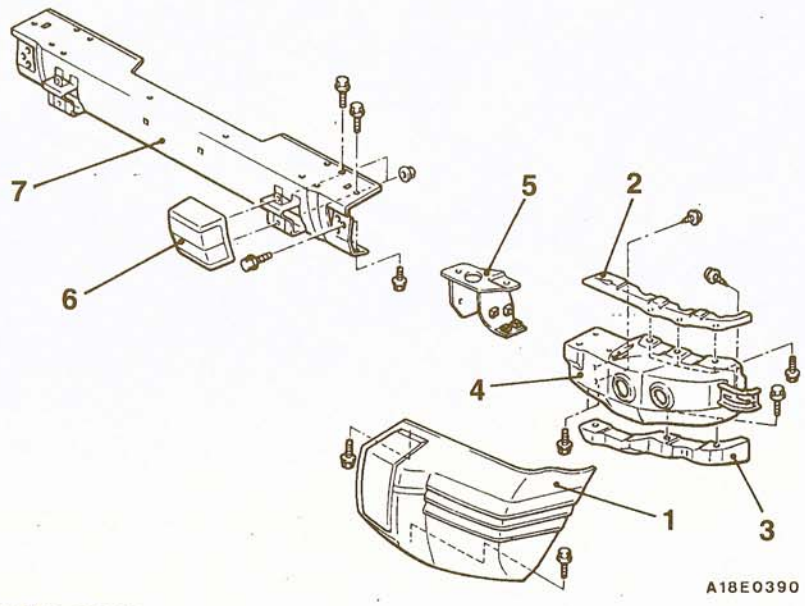


**Disassembly steps**

1. Bumper side face
2. Bumper side upper reinforcement
3. Bumper side lower reinforcement
4. Bumper side reinforcement
5. Bumper mount bracket
6. Bumper guard
7. Bumper center face

# REAR BUMPER

51100190060

## REMOVAL AND INSTALLATION

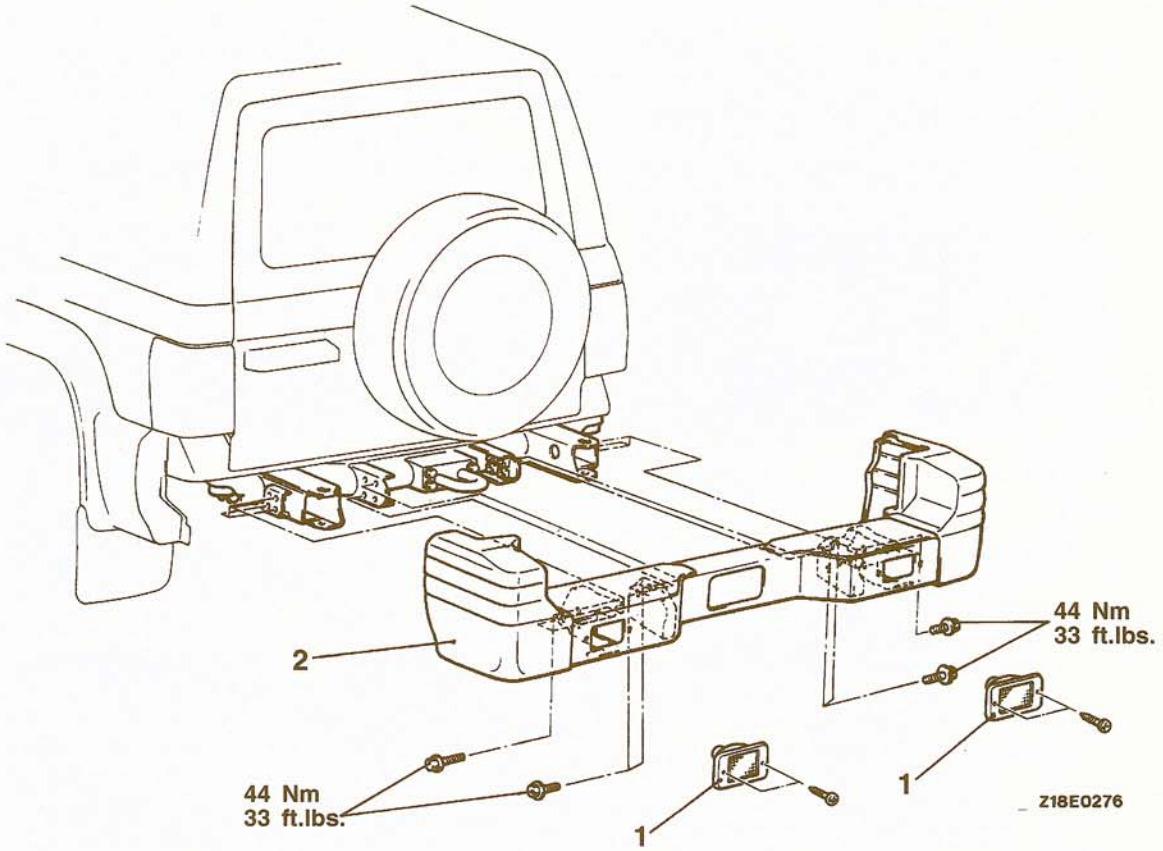


**Removal steps**

1. Back-up lights
2. Bumper assembly

**TSB Revision**

## DISASSEMBLY AND REASSEMBLY

51100210063

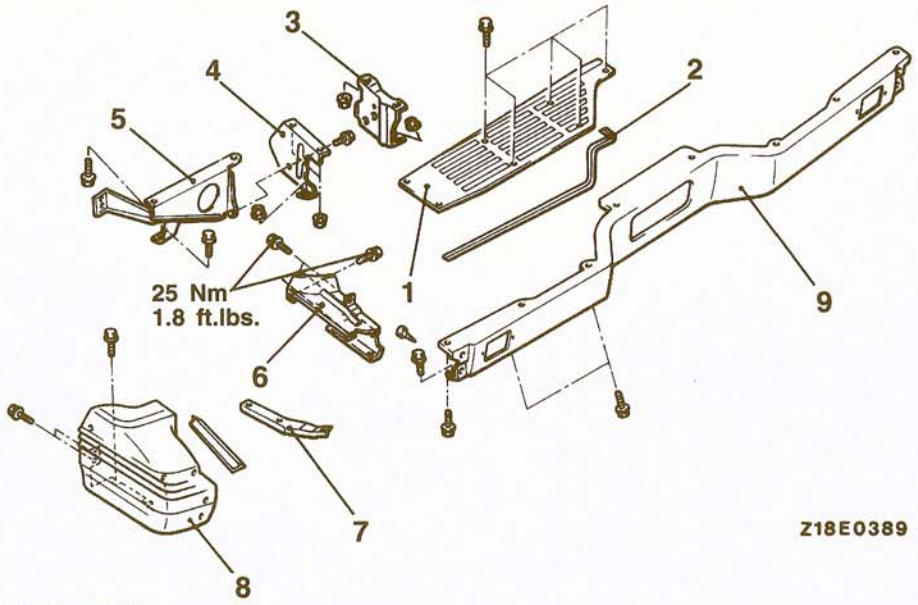


**Removal steps**

1. Bumper step plate
2. Weatherstrip
3. Bumper stay A
4. Bumper stay B
5. Bumper reinforcement
6. Bumper side upper reinforcement
7. Bumper side lower reinforcement
8. Bumper side face
9. Bumper center face

# GARNISHES AND MOULDINGS

51100440011

## REMOVAL AND INSTALLATION

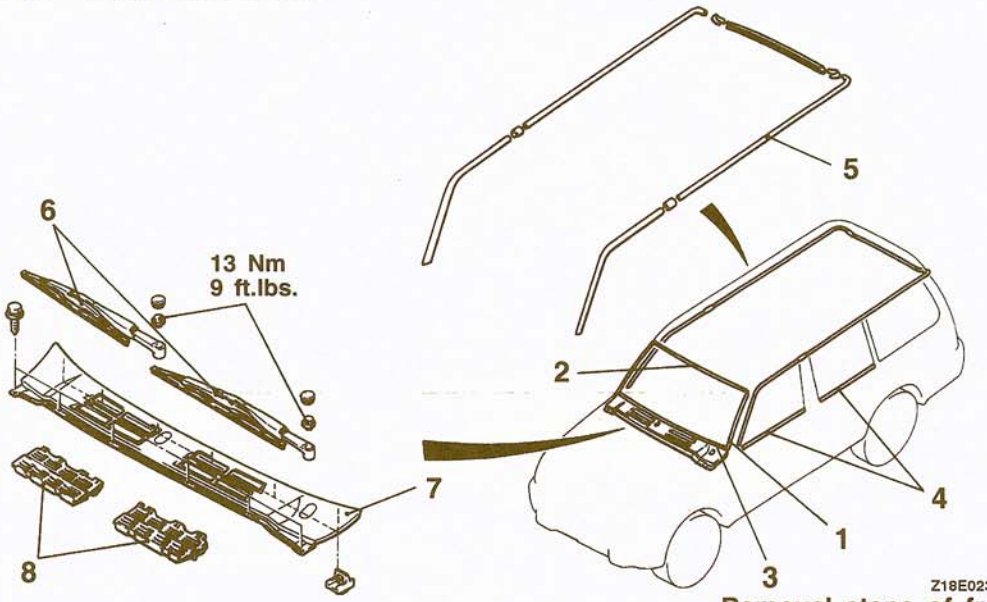


1. Windshield side moulding [Refer to GROUP 42 – Windshield.]
2. Windshield upper moulding [Refer to GROUP 42 – Windshield.]
3. Windshield lower moulding [Refer to GROUP 42 – Windshield.]
4. Belt line moulding [Refer to GROUP 42 – Window Glass Run-channel and Door Opening Weather-strip.]
5. Drip moulding

**Removal steps of front deck garnish**

- Hood [Refer to GROUP 42 – Hood.]

6. Wiper arm assembly
7. Front deck garnish
8. Air intake garnish

**TSB Revision**

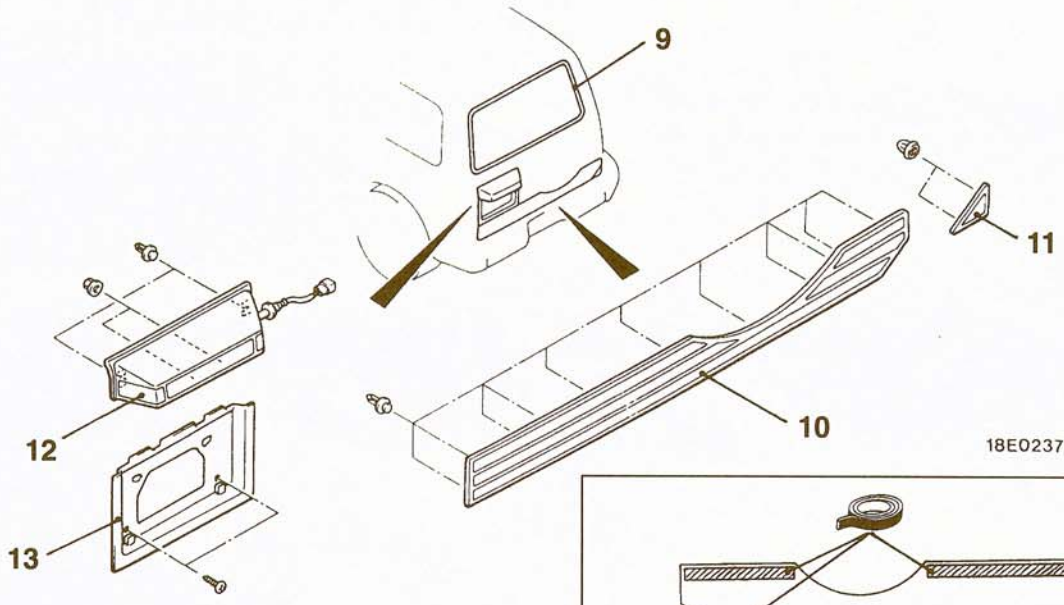


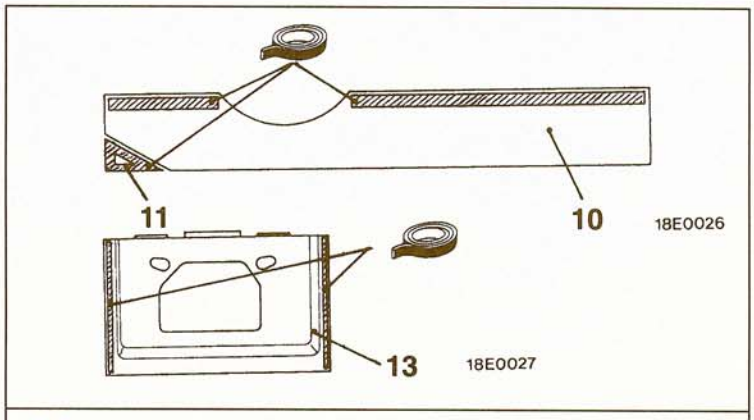


**Adhesive tape:**
**3M ATD Part No. 6382 or equivalent**

00001952

9. Back door window glass moulding [Refer to GROUP 42 – Back Door Window Glass.]
10. Back door lower garnish
11. Back door corner garnish

**License light garnish removal steps**

- Back door trim [Refer to GROUP 42 – Back Door Trim and Waterproof Film.]

12. License light garnish
13. License plate garnish

# SIDE GARNISH AND WIDE FENDER

51101380015

## REMOVAL AND INSTALLATION

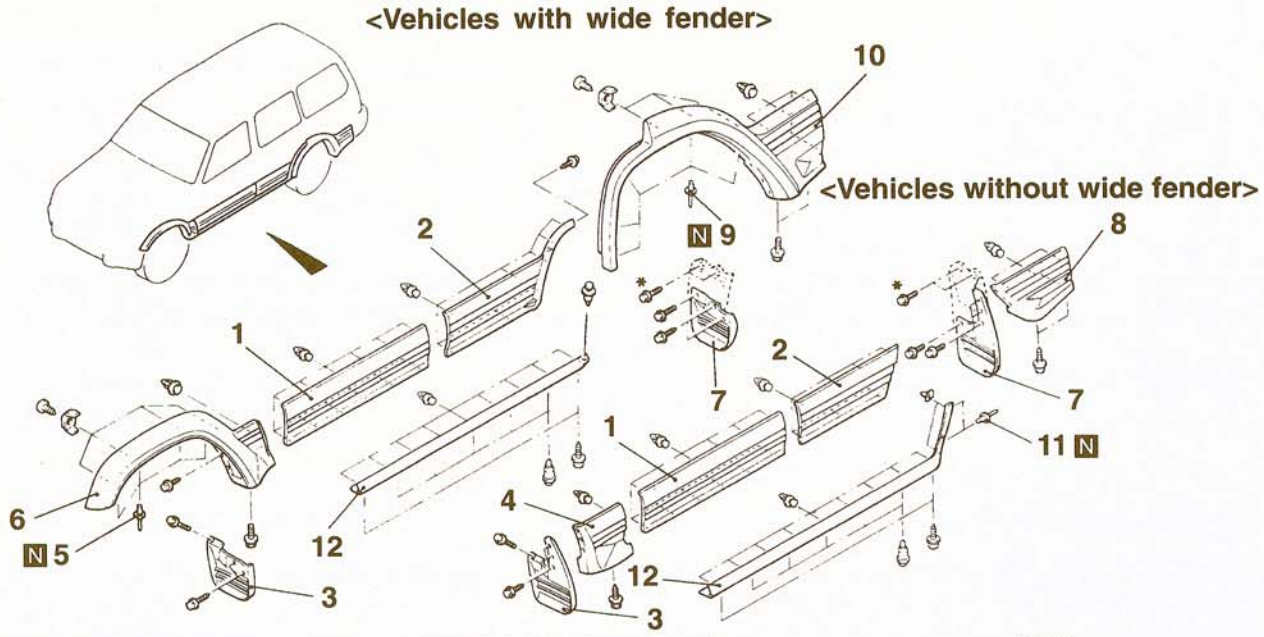


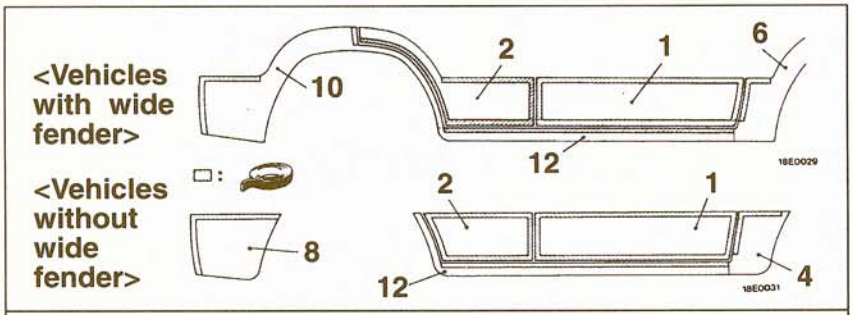


Adhesive tape: 3M ATD Part No. 6382 or equivalent

**Front door side garnish removal**

◀A▶ ▶A◀ 1. Front door side garnish

**Rear door side garnish removal**

◀A▶ ▶A◀ 2. Rear door side garnish

**Fender side garnish removal steps**

3. Front mud guard
◀A▶ ▶A◀ 4. Fender side garnish

**Front flare removal steps**

- Splash shield
  (Refer to GROUP 42 – Fender.)

◀B▶ ▶B◀ 5. Blind rivet
◀A▶ ▶A◀ 6. Front flare

**Rear quarter side garnish removal steps**

7. Rear mud guard
◀A▶ ▶A◀ 8. Rear quarter side garnish

**Rear flare removal steps**

7. Rear mud guard
◀B▶ ▶B◀ 9. Blind rivet
◀A▶ ▶A◀ 10. Rear flare

**Side sill garnish removal steps**

**<Vehicles without wide fender>**

◀A▶ ▶A◀ 4. Fender side garnish
◀B▶ ▶B◀ 11. Blind rivet
◀A▶ ▶A◀ 12. Side sill garnish

**Side sill garnish removal steps**

**<Vehicles with wide fender>**

◀A▶ ▶A◀ 6. Front flare
◀A▶ ▶A◀ 12. Side sill garnish

NOTE
Mounting bolts with * marks indicate R.H. side only.

**TSB Revision**

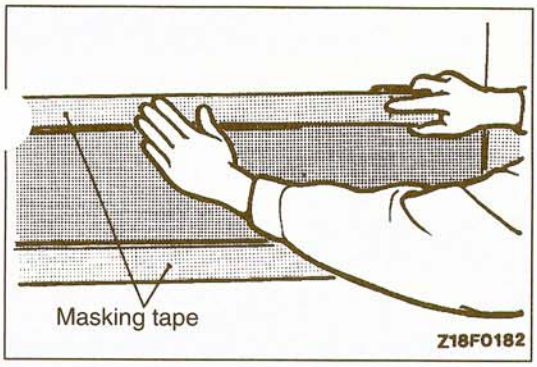


## REMOVAL SERVICE POINTS

### ◀A▶ FRONT DOOR SIDE GARNISH/REAR DOOR SIDE GARNISH/FENDER SIDE GARNISH/ FRONT FLARE/REAR QUARTER SIDE GARNISH/ REAR FLARE/SIDE SILL GARNISH REMOVAL

(1) Apply masking tape to the outside circumference of each side garnish.

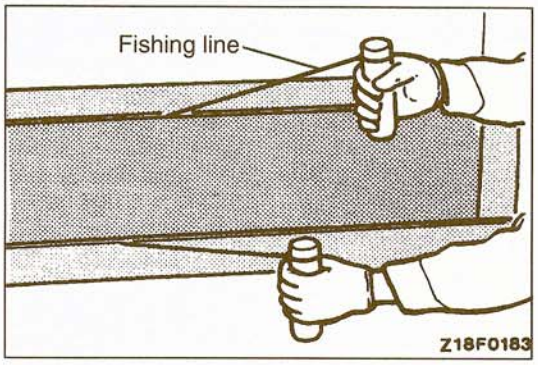


(2) Insert a fishing line [φ0.8 mm (.03 in.)] between the body and the side garnish, and pull both ends alternately to cut the adhesive to remove the side garnish.
(3) Pull the section of the side garnish with the clips toward you to remove the clips.

**Caution**
1. **When reusing the side garnish, remove by pulling the fishing line along the edge of the body so as not to damage the edge of the side garnish.**
2. **If the adhesive is difficult to remove, heat it to 40 °C (104 °F).**

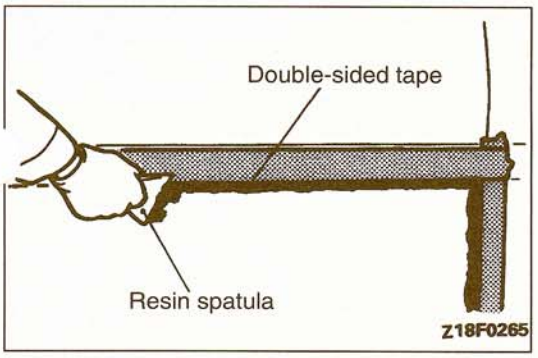


(4) Scrape off the double-sided adhesive tape with a resin spatula.
(5) Tear off the masking tape.

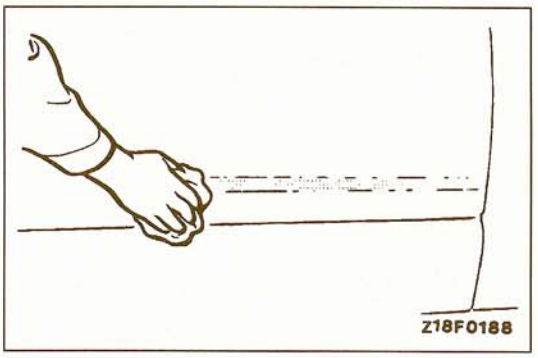


(6) Wipe off application surface of body with clean cloth dampened with degreaser (3M ATD Part No. 8906 or equivalent).

NOTE
After wiping the surface, leave if as it is to let the degreaser evaporate.

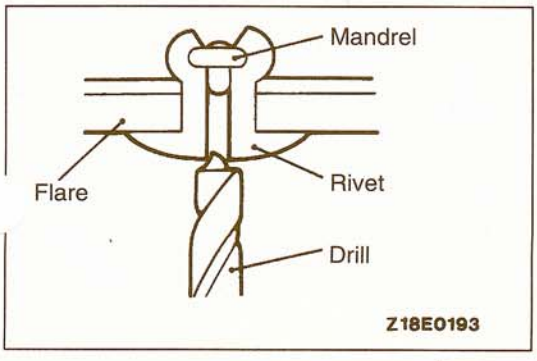


### ◀B▶ BLIND RIVETS REMOVAL

Use a drill [φ4.0–5.5 mm (.16–.22 in.)] to break the rivet by drilling a hole, and remove the blind rivet.

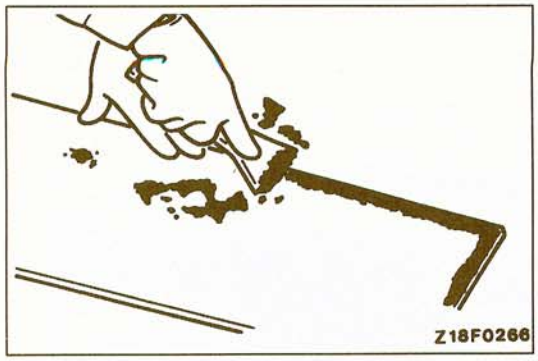


## INSTALLATION SERVICE POINTS

### ▶A◀ SIDE SILL GARNISH/REAR FLARE/REAR QUARTER SIDE GARNISH/FRONT FLARE/FENDER SIDE GARNISH/REAR DOOR SIDE GARNISH/ FRONT DOOR SIDE GARNISH INSTALLATION

- **Attachment of double-sided tape to each side garnish (when reusing)**

(1) Scrape off the double-sided adhesive tape with a resin spatula or gasket scraper.




(2) Use a cloth moistened with degreaser (3M ATD Part No. 8906 or equivalent) to wipe the side garnish clean.
(3) Attach specified double-sided adhesive tape to each side garnish.

**Specified adhesive:**
**3M ATD Part No. 6382 or equivalent**

(4) Heat the adhesive surface of the both-side tape on the side garnish to about 40–60°C (104–140°F).

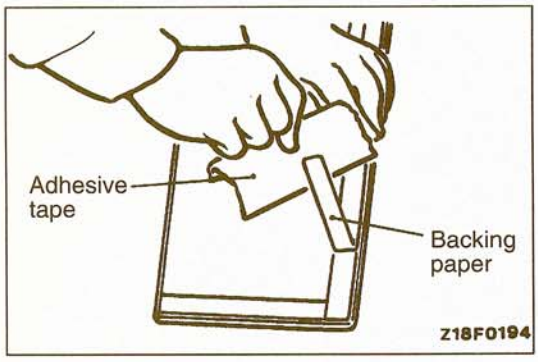


- **Each side garnish installation**

(1) Tear off the double-sided tape backing paper.

NOTE
If you attach part of the adhesive tape to the edge of the backing paper, it will be easy to tear off.

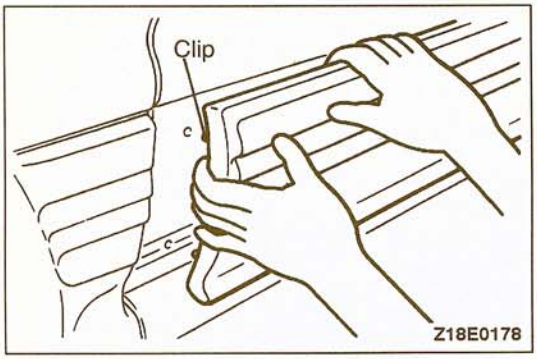


(2) Install the side garnish so that the clips match the body holes.

NOTE
If the double-sided adhesive tape is difficult to affix during winter, etc., warm the bonding surfaces of the body and the side garnishes to approx. 40–60°C (104–140°F) before affixing the tape.

(3) Firmly press in the side garnish.

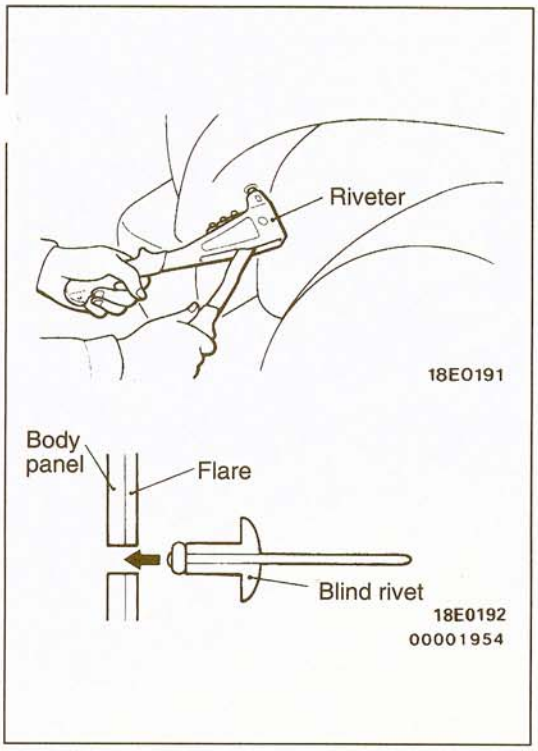


**▶B◀ BLIND RIVETS INSTALLATION**

Use a riveter to connect the blind rivet.

# WINDSHIELD WIPER AND WASHER

51100760063

## REMOVAL AND INSTALLATION

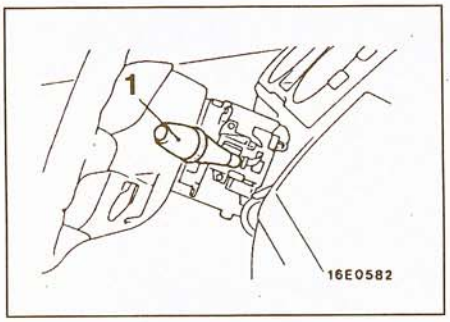


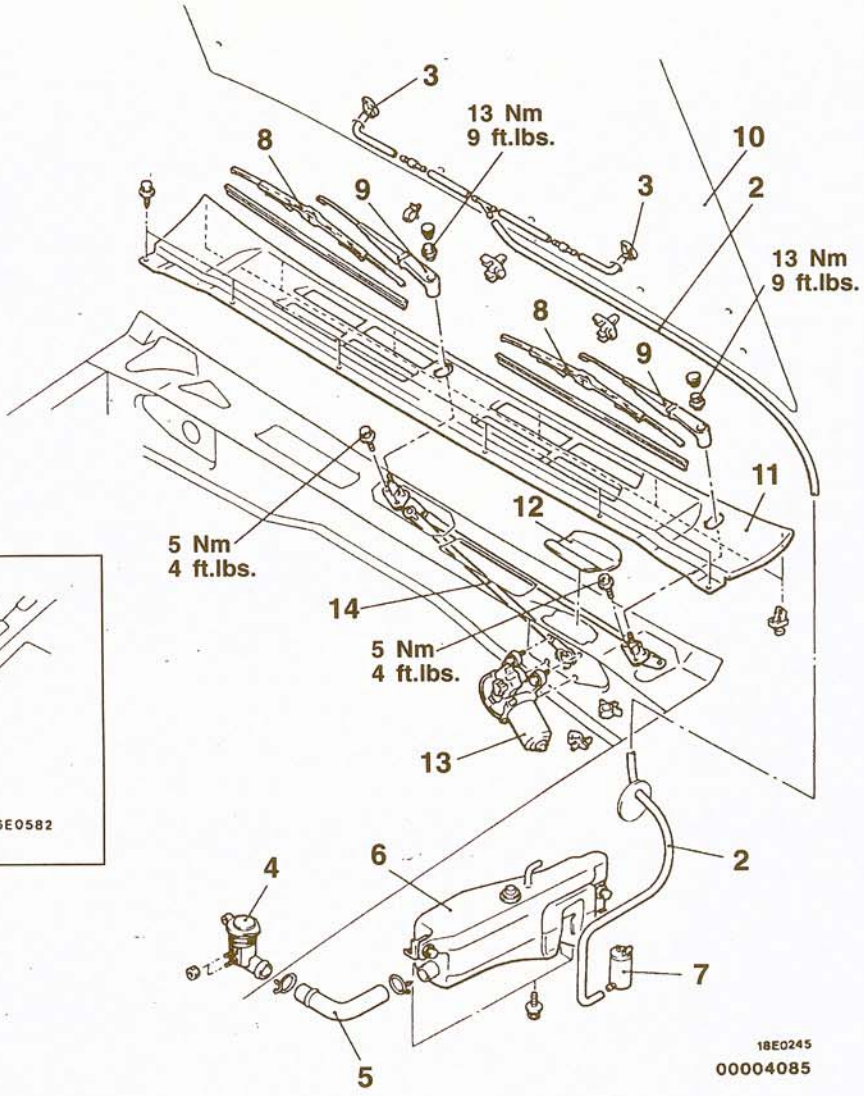


1. Wiper and washer switch (Refer to P.51-14.)
2. Washer tube
3. Washer nozzle
▶A◀ 8. Wiper blade
▶A◀ 9. Wiper arm
◀A▶ 13. Wiper motor

**Washer tank removal steps**

- Splash shield (Refer to GROUP 42 – Fender.)
- Washer fluid draining

2. Washer tube
4. Cap
5. Hose
6. Washer tank assembly
7. Washer motor

**Linkage removal steps**

▶A◀ 9. Wiper arm
10. Hood
11. Front deck garnish
12. Hole cover
◀A▶ 13. Wiper motor
14. Linkage

TSB Revision

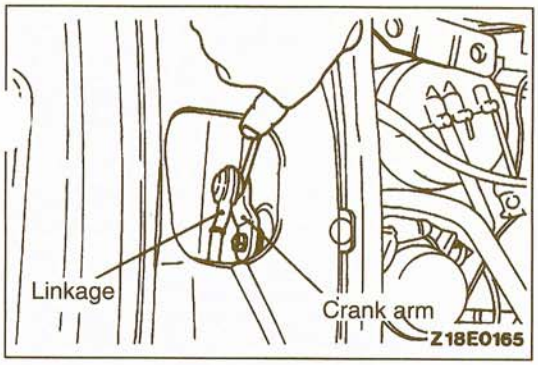


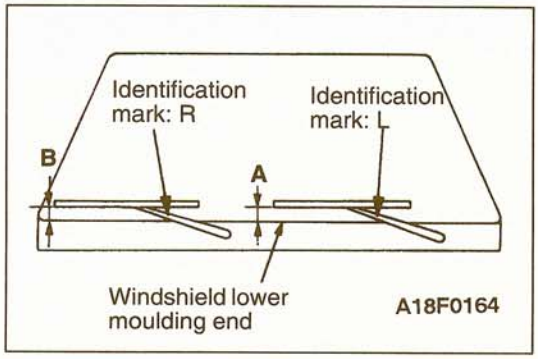


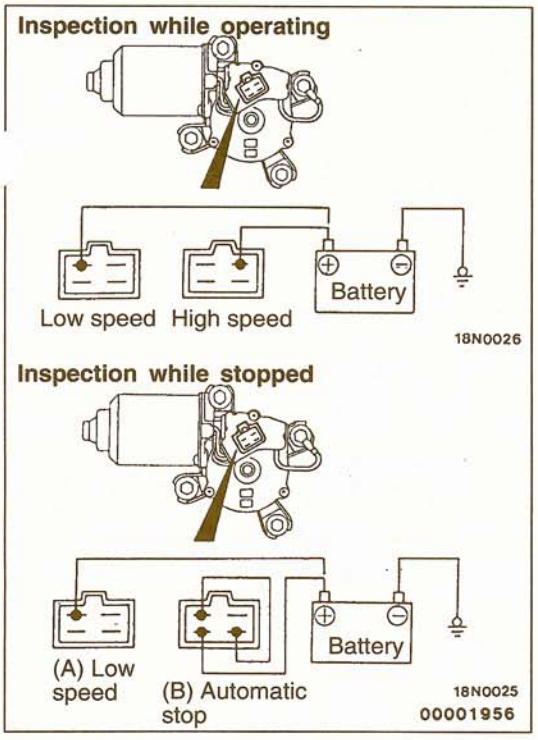


## REMOVAL SERVICE POINT

### ◀A▶ WIPER MOTOR REMOVAL

Loosen the wiper motor assembly mounting bolts, and then remove the wiper motor assembly. Disconnect the linkage and the motor assembly, and then remove the linkage.

**Caution**

**Because the installation angle of the crank arm and the motor has been set, do not remove them unless it is necessary to do so. If they must be removed, remove them only after marking their mounting positions.**

## INSTALLATION SERVICE POINT

### ▶A◀ WIPER ARM/WIPER BLADE INSTALLATION

(1) The movements of the left and right wiper arms are different, so check the identification marks.

(2) Install the wiper blade in the specified position (standard value) as shown the illustration.

**Standard value**

**(A): 25–35 mm (.98–1.38 in.)**

**(B): 35–45 mm (1.38–1.77 in.)**

## INSPECTION

51100770042

### WIPER MOTOR

Check the wiper motor the wiring harness connector disconnected and with the wiper motor remaining installed to the body.

**Wiper Motor at low speed and at high Speed Operation**

Connect a battery to the wiper motor as shown in the illustration and inspect the motor operation at low speed and at high speed.

**Wiper Motor at Stop Position Operation**

(1) Run the wiper motor at low speed, disconnect the battery, and stop the motor.

(2) Reconnect the battery as shown in the illustration, and confirm that after the motor starts operating at low speed, it stops at the automatic stop position.

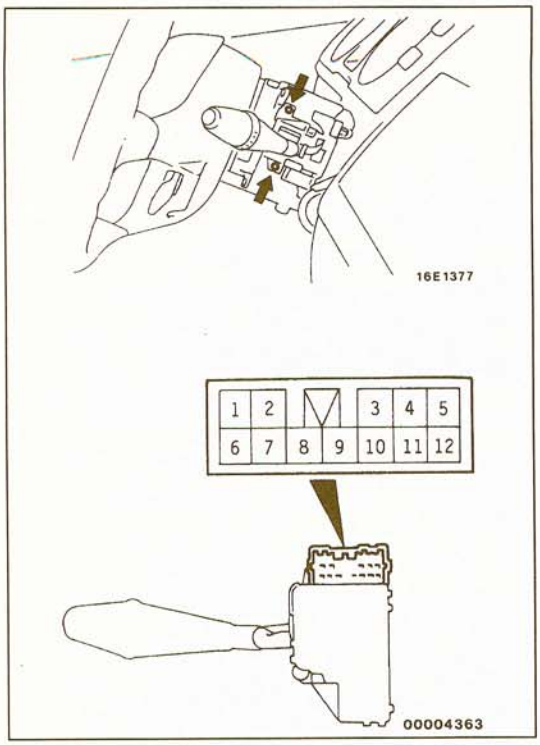


## COLUMN SWITCH

### Wiper and Washer Switch

(1) Remove the column cover lower.
(2) Remove the column cover upper.
(3) Loosen the screw indicated by the arrow in the illustration, and then remove the wiper and washer switch.
(4) Operate the switch and check the continuity between the terminals.

| Switch position | | Terminal | | | | |
|---|---|---|---|---|---|---|
| | | 6 | 7 | 8 | 9 | 10 |
| Wiper switch | OFF | | ○ | ○ | | |
| | 1 (LO) | | | ○ | | ○ |
| | 2 (HI) | | | | ○ | ○ |
| Washer switch | ON | ○ | | | | ○ |

### Intermittent Wiper Relay (Intermittent Operation Inspection)

(1) Connect the column switch connector.
(2) Turn the ignition switch to ACC.
(3) Inspect the intermittent operation time when the wiper switch is turned to INT.

**Vehicles without variable intermittent control**
**approx. 3–6 seconds**

**Vehicles with variable intermittent control**
**FAST Approx. 3 seconds**
**SLOW Approx. 12 seconds**

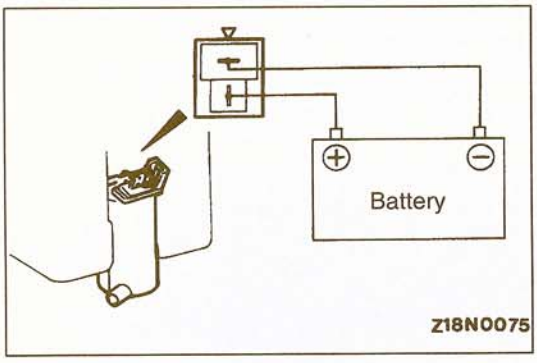


## WASHER MOTOR

(1) With the washer motor installed to the washer tank, fill the washer tank with water.
(2) When the battery is connected as shown in the illustration, check that the water squirts out strongly.

# REAR WIPER AND WASHER

51100850029

## REMOVAL AND INSTALLATION

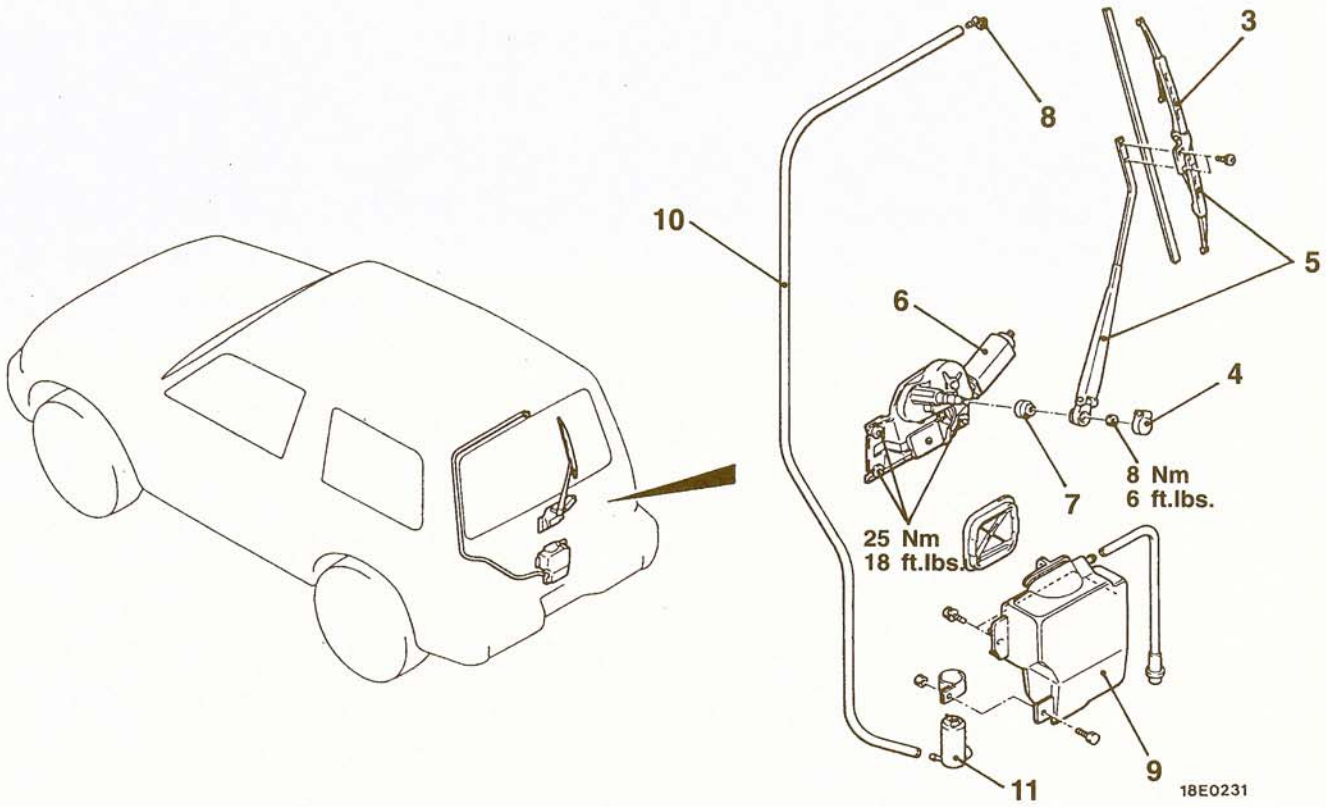


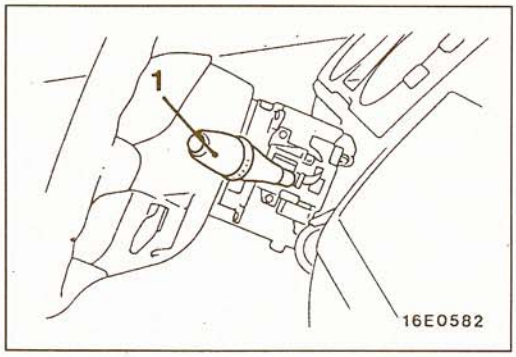


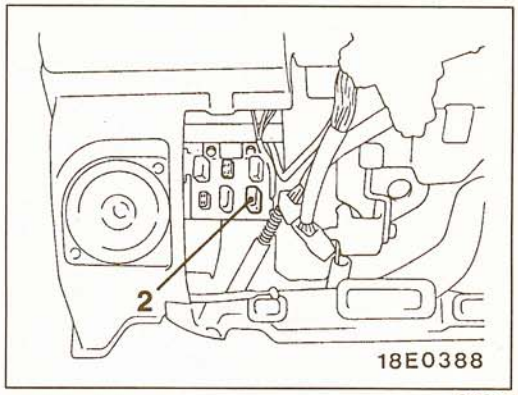


00004086

1. Rear wiper and washer switch (Refer to P.51-16.)
3. Wiper blade
8. Washer nozzle

**Rear intermittent wiper relay removal steps**

- Instrument under cover (Refer to GROUP 52A – Instrument Panel.)

2. Rear intermittent wiper relay

**Wiper motor removal steps**

4. Cover

▶B◀ 5. Wiper arm and blade assembly

- Back door trim (Refer to GROUP 42 – Back Door Trim and Waterproof Film.)

6. Wiper motor and bracket assembly

▶A◀ 7. Grommet

**Washer tank and motor removal steps**

- Back door trim (Refer to GROUP 42 – Back Door Trim and Waterproof Film.)

9. Washer tank assembly
- Washer fluid draining

10. Washer tube
11. Washer motor

**TSB Revision**

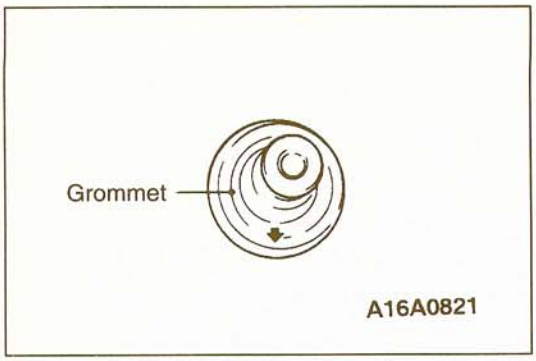


## INSTALLATION SERVICE POINTS

### ▶A◀ GROMMET INSTALLATION

Install the grommet so that the arrow points downwards.

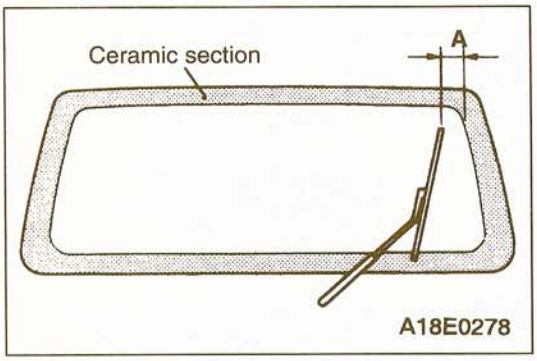


### ▶B◀ WIPER ARM AND BLADE ASSEMBLY INSTALLATION

Install the wiper blade so that the tip stops at the standard position (standard value).

**Standard value (A): 65–75 mm (2.56–2.95 in.)**

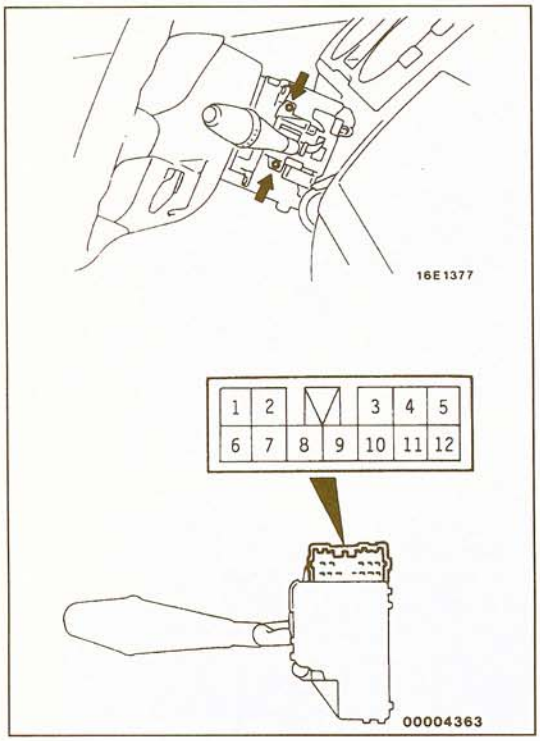


## INSPECTION

51100860022

### REAR WIPER AND WASHER SWITCH

(1) Remove the column cover lower.
(2) Remove the column cover upper.
(3) Loosen the screw indicated by the arrow in the illustration and then remove the rear wiper and washer switch.
(4) Operate the switch and check the continuity between the terminals.

| Switch position | | Terminal | | | |
|---|---|---|---|---|---|
| | | 2 | 3 | 4 | 10 |
| Wiper switch | OFF | | | | |
| | INT | | ○ | | ○ |
| | ON | | | ○ | ○ |
| Washer switch | ON | ○ | | | ○ |

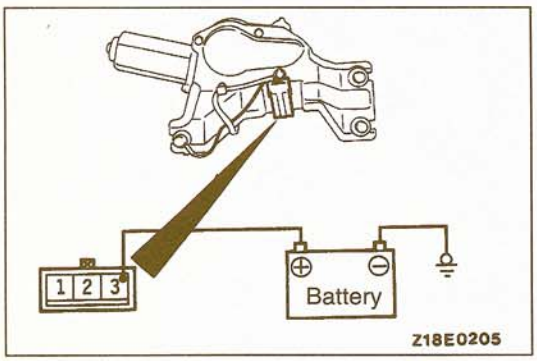


### WIPER MOTOR

Disconnect the wiring harness connector, and then check the wiper motor with it installed to the body.

#### Wiper Motor Operation

Connect a battery to the wiper motor as shown in the illustration and inspect the motor operation.

TSB Revision

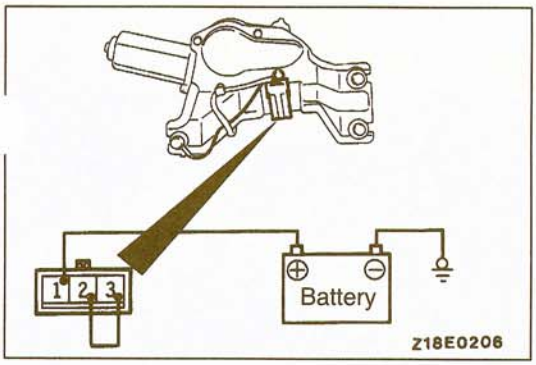


### Wiper Motor at Stop Position Operation

(1) Run the wiper motor, disconnect the battery, and stop the motor.
(2) Reconnect the battery as shown in the illustration, and confirm that after the motor starts operating, it stops at the automatic stop position.

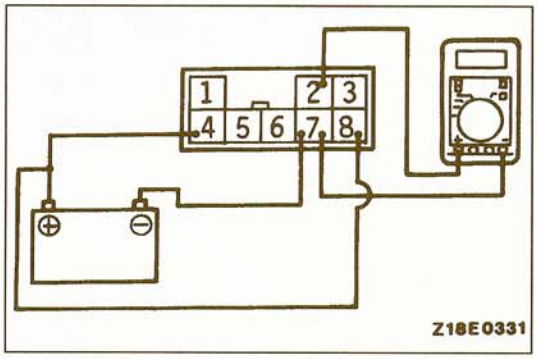


## REAR INTERMITTENT WIPER RELAY

### 1. REAR WIPER AND WASHER FUNCTION CHECK

(1) Connect the (+) terminal of the voltmeter to terminal (2) and the (–) terminal to terminal (7).
(2) Check that battery voltage shows when the battery (+) terminal is connected to terminal (4), (8) and the battery (–) terminal is connected to terminal (7).

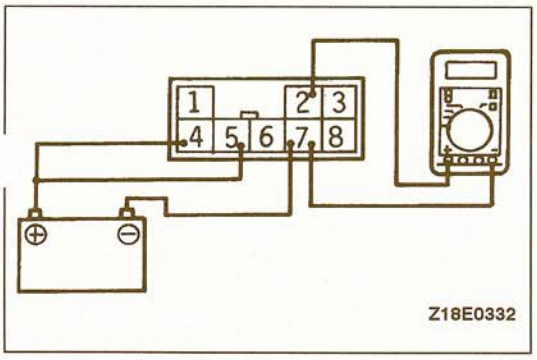


### 2. REAR INTERMITTENT WIPER FUNCTION CHECK

(1) Connect the (+) terminal of the voltmeter to terminal (2) and the (–) terminal to terminal (7).
(2) Check that battery voltage shows at approximately 8-second intervals when the positive battery terminal is connected to terminals (4) and (5) and the negative battery terminal is connected to terminal (7).

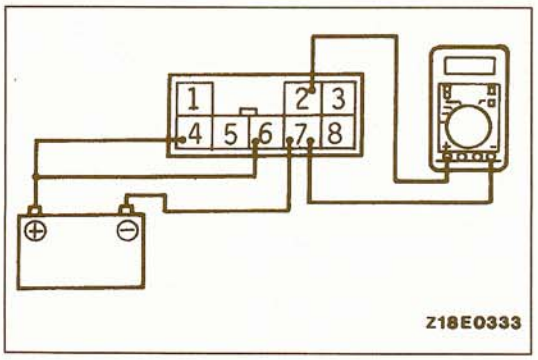


### 3. REAR WIPER ON-FUNCTION CHECK

(1) Connect the (+) terminal of the voltmeter to terminal (2) and the (–) terminal to terminal (7).
(2) Check the battery voltage shows when the battery (+) terminal is connected to terminal (4), (6) and the battery (–) terminal is connected to terminal (7).

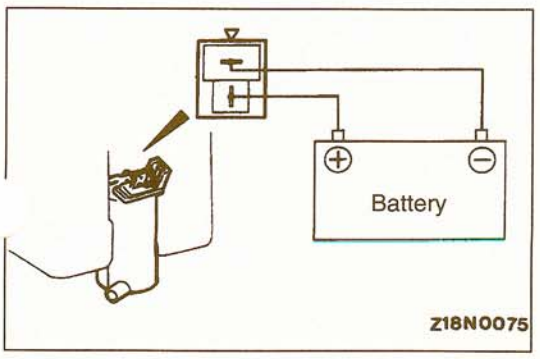


### WASHER MOTOR

(1) With the washer motor installed to the washer tank, fill the washer tank with water.
(2) When the battery is connected as shown in the illustration, check that the water squirts out strongly.

# HEADLIGHT WASHER

51100970039

## REMOVAL AND INSTALLATION

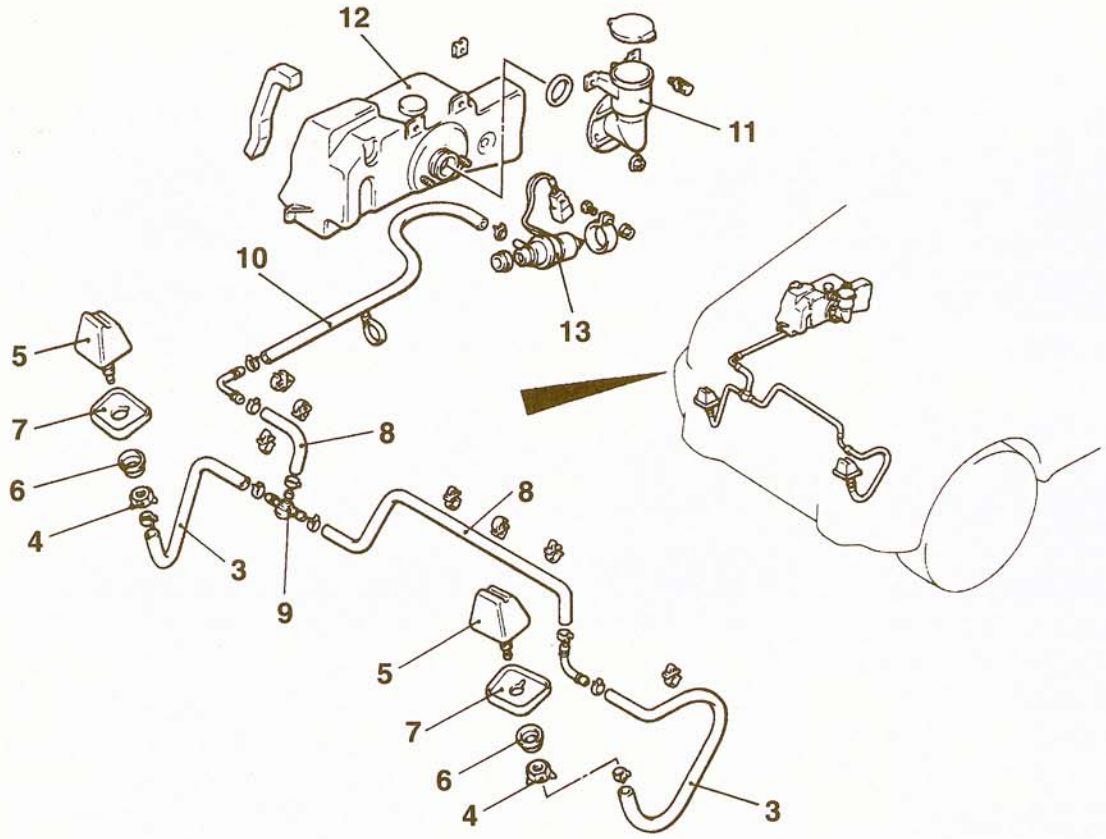


18E0279

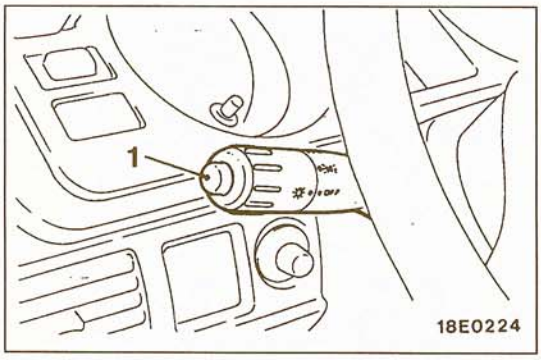


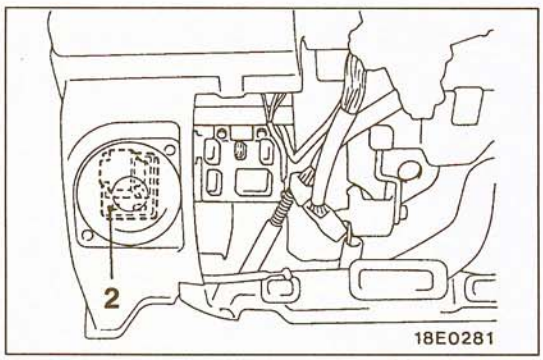


00001961

**Headlight washer switch removal**

1. Headlight washer switch (Refer to P.51-19.)

**Nozzle and check valve removal steps**

- Front bumper (Refer to P.51-4.)
- Washer fluid draining

3. Washer hose
4. Nut
5. Nozzle
6. Collar
7. Nozzle base
8. Washer hose
9. Check valve

**Headlight washer relay removal steps**

- Instrument under cover (Refer to GROUP 52A – Instrument Panel.)

2. Headlight washer relay

**Washer tank removal steps**

- Splash shield [RH] (Refer to GROUP 42 – Fender.)
- Front combination light (Refer to GROUP 54 – Lighting System.)
- Washer fluid draining

10. Washer hose
11. Cap
12. Washer tank assembly
13. Washer motor

**TSB Revision**

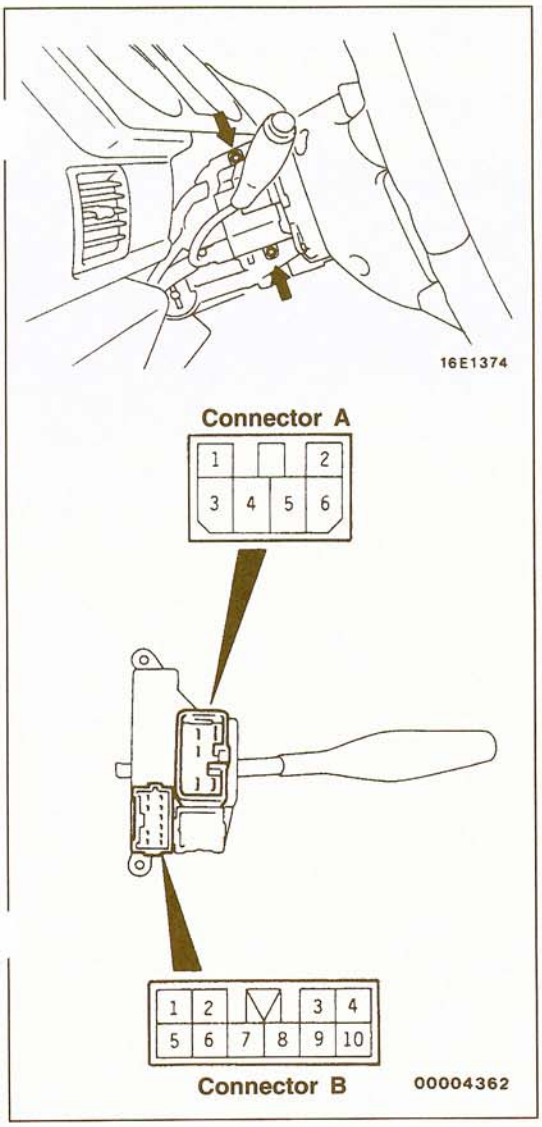


## INSPECTION

51100980032

### HEADLIGHT WASHER SWITCH

(1) Remove the column cover lower.
(2) Remove the column cover upper.
(3) Loosen the screw indicated by the arrow in the illustration, and then remove the headlight washer switch.
(4) Disconnect the column switch connector and check the continuity between the terminals for each switch.

| Switch position | Connector A terminal | Connector B terminal |
|---|---|---|
| | 1 | 2 |
| OFF | | |
| ON | ○ | ○ |

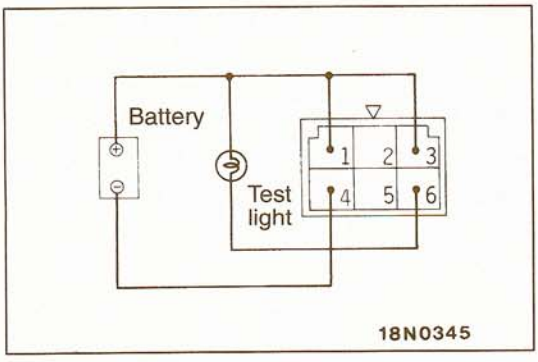


### HEADLIGHT WASHER RELAY

(1) Connect the battery and test light to the relay as shown in the illustration.

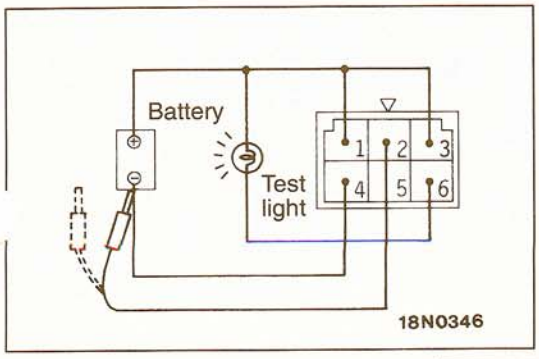


(2) The relay is normal if the light illuminates for approximately 0.3 second upon connection of terminal (2) to the negative battery terminal.

TSB Revision

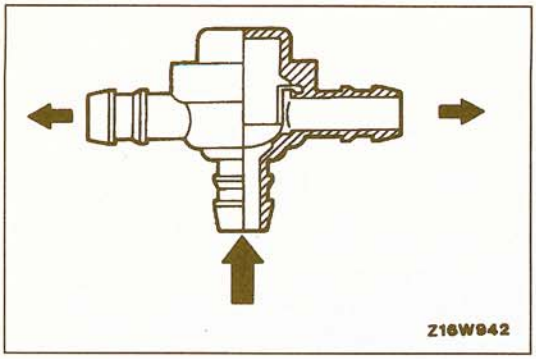


### CHECK VALVE

Apply pressure to the inlet of the check valve to check its opening pressure.

**Opening pressure: 50–110 kPa (7.1–15.6 psi)**

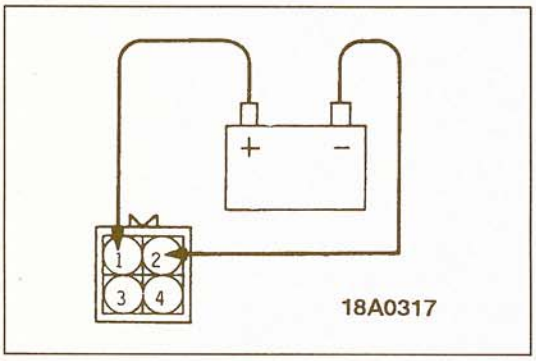


### HEADLIGHT WASHER MOTOR

(1) With the washer motor installed to the washer tank, fill the washer tank with water.
(2) Connect the positive battery cable to terminal (2) and the negative battery cable to terminal (1), and then check that the washer motor runs and water is injected.

# DOOR MIRROR

51100640022

## REMOVAL AND INSTALLATION

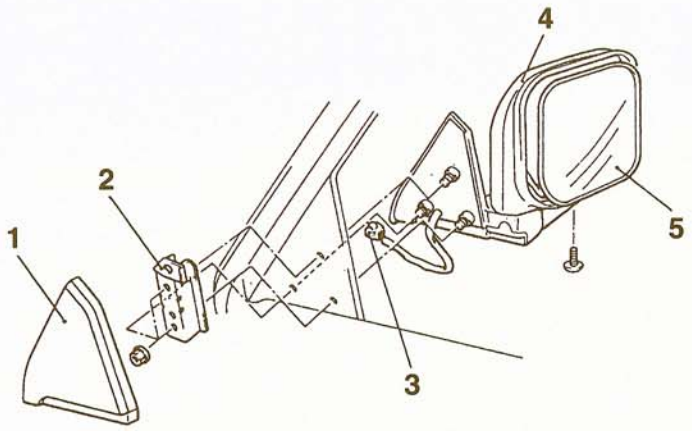


18E0171

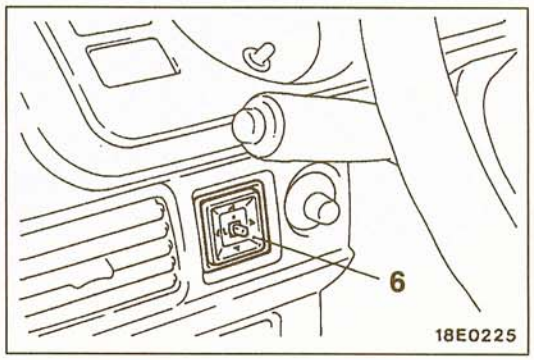


00001963

**Door mirror removal steps**

1. Delta cover inner
2. Inner cover bracket
3. Harness connector
4. Door mirror
5. Mirror

**Remote controlled mirror switch removal**

6. Remote controlled mirror switch

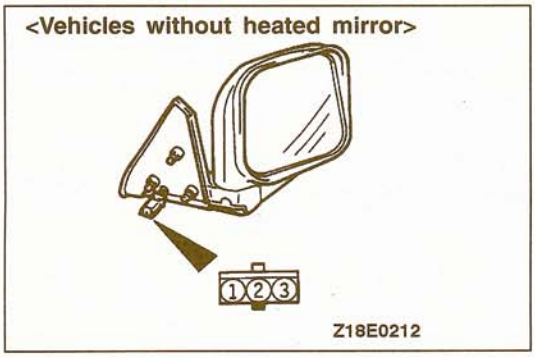


## INSPECTION

51100090018

### REMOTE CONTROLLED MIRROR ASSEMBLY <Vehicles without heated mirror>

Check that the mirror moves as described in the table when each terminal is connected to the battery.

| Battery connection terminals | | | Mirror operation |
|---|---|---|---|
| 1 | 2 | 3 | |
| ⊖ | | ⊕ | Up |
| ⊕ | | ⊖ | Down |
| ⊕ | ⊖ | | Left |
| ⊖ | ⊕ | | Right |

TSB Revision

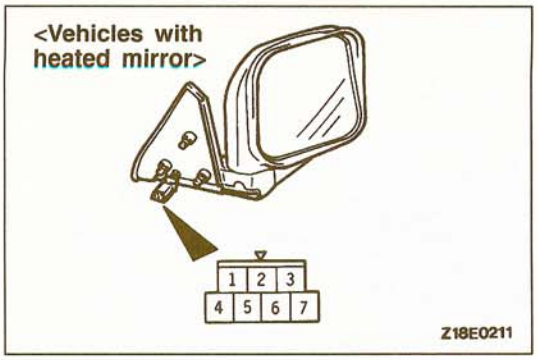


**<Vehicles with heated mirror>**

1. Check to be sure that the mirror moves as described in the table when each terminal is connected to the battery.

| Battery connection terminals | | | Mirror operation |
|---|---|---|---|
| 5 | 6 | 7 | |
| ⊖ | | ⊕ | Up |
| ⊕ | | ⊖ | Down |
| ⊕ | ⊖ | | Left |
| ⊖ | ⊕ | | Right |

2. Check if there is continuity between terminals (1) and (4).

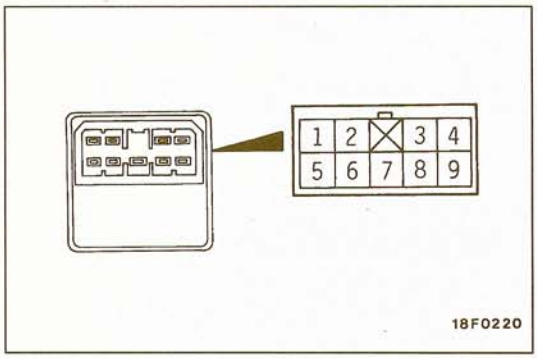


## REMOTE CONTROLLED MIRROR SWITCH 51100710013

Operate the switch and check the continuity between the terminals.

| Direction | Left side | | | | | Right side | | | | |
|---|---|---|---|---|---|---|---|---|---|---|
| | Terminal | | | | | | | | | |
| | 3 | 4 | 6 | 7 | 8 | 2 | 4 | 6 | 7 | 9 |
| UP | | ○ | | | ○ | ○ | ○ | | | |
| | | | ○ | ○ | | | | ○ | ○ | |
| DOWN | | ○ | | ○ | | | ○ | | ○ | |
| | | | ○ | | ○ | ○ | | ○ | | |
| LEFT | ○ | | ○ | ○ | | | ○ | | ○ | ○ |
| | | ○ | | | | | | ○ | | |
| RIGHT | ○ | ○ | | | | | ○ | | ○ | ○ |
| | | | ○ | ○ | | | | ○ | | |

TSB Revision

# INTERIOR AND SUPPLEMENTAL RESTRAINT SYSTEM (SRS)

## CONTENTS

52109000101

INTERIOR ..... 52A

SUPPLEMENTAL RESTRAINT SYSTEM (SRS) ..... 52B

NOTES

# INTERIOR

## CONTENTS

52109000118


FLOOR CONSOLE* ..... 5
FRONT SEAT ..... 10
FRONT SEAT BELT ..... 18
GENERAL SPECIFICATIONS ..... 2
HEADLINING ..... 9
INSTRUMENT PANEL* ..... 2
SECOND SEAT ..... 15
SECOND SEAT BELT ..... 20
THIRD SEAT ..... 17
THIRD SEAT BELT ..... 21
TRIMS ..... 7


**WARNINGS REGARDING SERVICING OF SUPPLEMENTAL RESTRAINT SYSTEM (SRS) EQUIPPED VEHICLES**

**WARNING!**

**(1) Improper service or maintenance of any component of the SRS, or any SRS-related component, can lead to personal injury or death to service personnel (from inadvertent firing of the air bag) or to the driver (from rendering the SRS inoperative).**

**(2) Service or maintenance of any SRS component or SRS-related component must be performed only at an authorized MITSUBISHI dealer.**

**(3) MITSUBISHI dealer personnel must thoroughly review this manual, and especially its GROUP 52B – Supplemental Restraint System (SRS) and GROUP 00 – Maintenance Service before beginning any service or maintenance of any component of the SRS or any SRS-related component.**

NOTE

The SRS includes the following components: SRS diagnosis unit, SRS warning light, air bag module, clock spring, and interconnecting wiring. Other SRS-related components (that may have to be removed/installed in connection with SRS service or maintenance) are indicated in the table of contents by an asterisk (*).

## GENERAL SPECIFICATIONS

52100020014

| Items | | Specifications |
|---|---|---|
| Suspension seat | Suspension mechanism | Coil spring type with shock absorber |
| | Up-and-down movement stroke mm (in.) | 50 (2.0) |
| | Body weight adjustment kg (lbs.) | 60–100 (132–220) |
| | Seat height adjustment | 3 steps |

## INSTRUMENT PANEL

52100170061

For installation of the instrument panel, the bolts and screws described below are used. They are indicated by symbols in the illustration.

| Name | Symbol | Size (D×L) mm (in.) | Color | Shape |
|---|---|---|---|---|
| Tapping screw | A | 5×12 (.20×.47) | – |  19Z0004 |
| | B | 5×12 (.20×.47) | Black | |
| | C | 5×16 (.20×.62) | – | |
| | D | 5×16 (.20×.62) | Black | |
| | E | 5×20 (.20×.79) | Black |  19Z0003 |
| | F | 5×12 (.20×.47) | – |  19Z0022 |
| | G | 5×20 (.20×.79) | – | |
| Washer assembled screw | H | 5×12 (.20×.47) | – |  19Z0006 |
| | I | 5×16 (.20×.62) | – | |
| | J | 5×16 (.20×.62) | – |  19Z0030 |
| | K | 5×20 (.20×.79) | Black | |
| Washer assembled bolt | L | 6×20 (.24×.79) | – |  19Z0019 |
| | M | 6×20 (.24×.79) | – |  19Z0029 |
| | N | 8×20 (.31×.79) | – |  19Z0005 |
| Cap installed screw | O | 5×16 (.20×.62) | – |  19Z0018 |
| Nut | P | 6 (.24) | – |  19Z0021 |
| | Q | 6 (.24) | – |  19Z0028 |

D = Thread diameter
L = Effective thread length

**TSB Revision**

## REMOVAL AND INSTALLATION

**Pre-removal and Post-installation Operation**
- Floor Console Assembly Removal and Installation (Refer to P.52A-5.)

**CAUTION: SRS**
**(1) When removing and installing the floor console (vehicles equipped with SRS), do not let it bump against the SRS diagnostic unit.**
**(2) For the passenger side air bag module removal/installation, always observe the service procedures of GROUP 52B – Air Bag Modules and Clock Spring.**

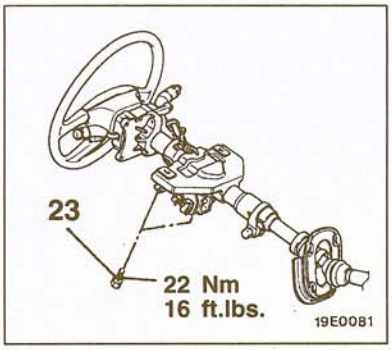


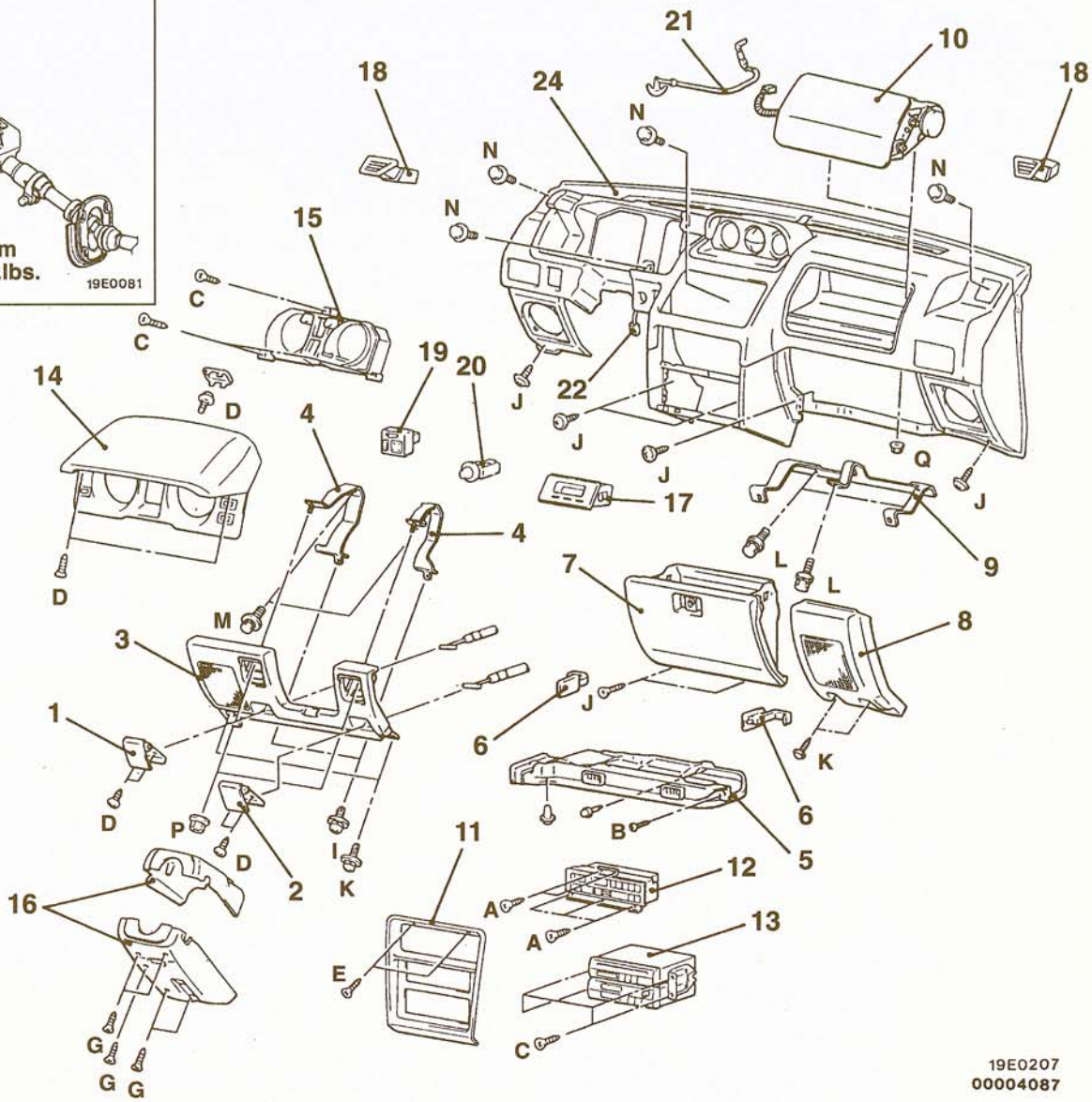


**Removal steps**

1. Hood lock release handle
2. Fuel filler door lock release handle
3. Knee protector
4. Stay
5. Foot shower duct (R.H.)
6. Glove box stopper
7. Glove box assembly
8. Corner cover
9. Stay
10. Passenger-side air bag module assembly
11. Center panel
12. Heater control assembly
13. Radio and tape player
14. Meter bezel assembly
15. Combination meter
16. Column cover
17. Clock
18. Side defroster garnish
19. Door mirror control switch
20. Rheostat
▶A◀ 21. Ventilation control wire
22. Harness connector
23. Steering column installation bolts
24. Instrument panel assembly

**TSB Revision**

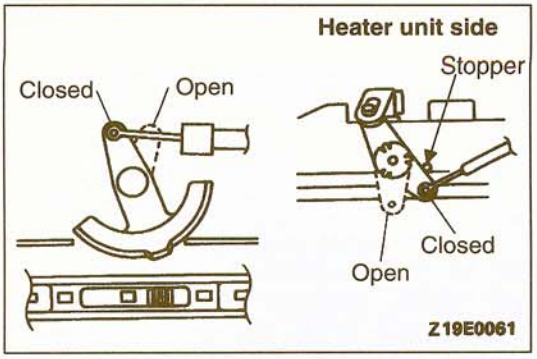


## INSTALLATION SERVICE POINT

### ▶A◀ VENTILATION CONTROL WIRE INSTALLATION

(1) Set the cool air bypass dial to the closed position.
(2) Close the cool air bypass lever at the heater unit side (lever is lightly hit against the stopper).
(3) Install the ventilation control wire and secure it with the clip.

## DISASSEMBLY AND REASSEMBLY

52100190074

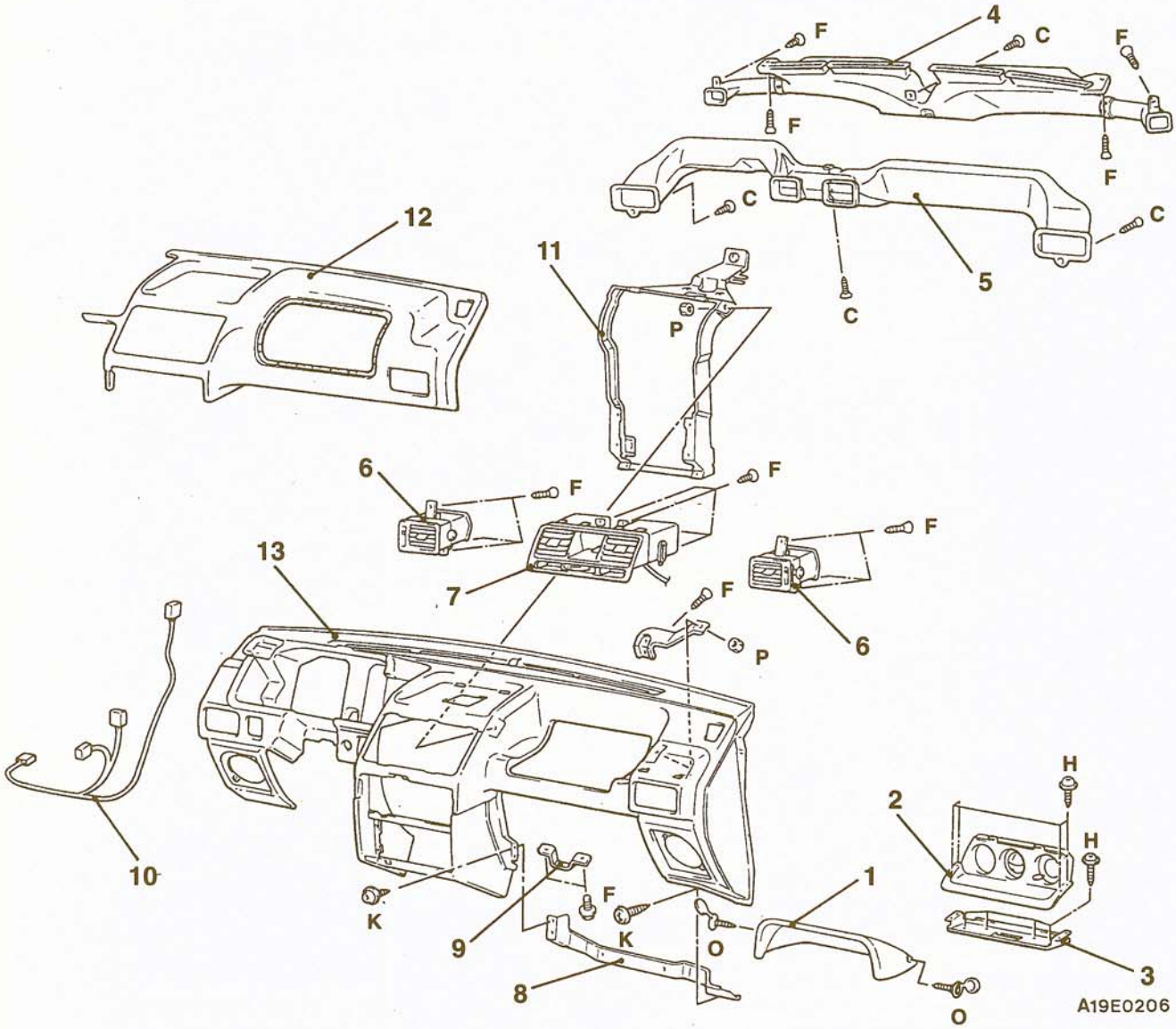


**Disassembly steps**

1. Meter hood
2. Multi meter
3. Meter bracket
4. Side defroster duct and defroster nozzle assembly
5. Distribution duct
6. Side air outlet
7. Center air outlet
8. Glove box frame
9. Glove box striker
10. Instrument panel wiring harness
11. Instrument panel reinforcement
12. Instrument panel pad
13. Instrument panel

**TSB Revision**

# FLOOR CONSOLE

52100220056

## REMOVAL AND INSTALLATION

**Caution: SRS**
**When removing and installing the floor console assembly, don't allow any impact or shock to the SRS diagnosis unit**

**<Box type rear console>**

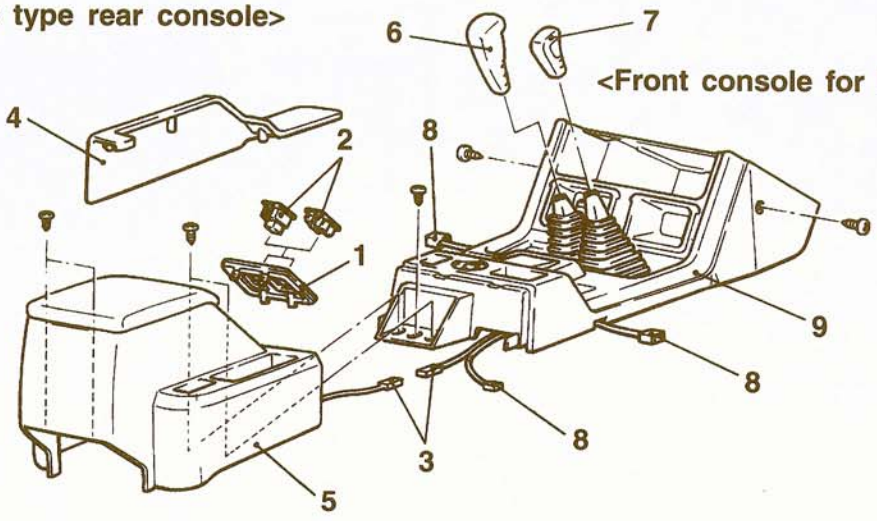


**<Tray type rear console>**

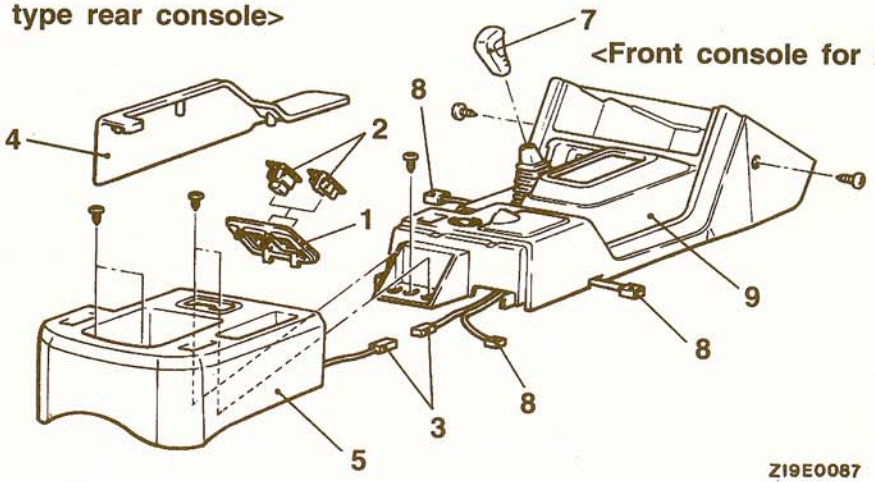


ZI9E0087

**Removal steps**

1. Switch panel
2. Suspension control switch or hole cover
3. Rear console harness connector
4. Side panel A

◀A▶

5. Rear console assembly
6. M/T shift lever knob
7. Transfer shift lever knob
8. Floor console harness connector
9. Front console assembly

## REMOVAL SERVICE POINT

### ◀A▶ FRONT CONSOLE ASSEMBLY REMOVAL

When removing the A/T front console assembly, set the A/T selector lever to "L".

## DISASSEMBLY AND REASSEMBLY

52100240045

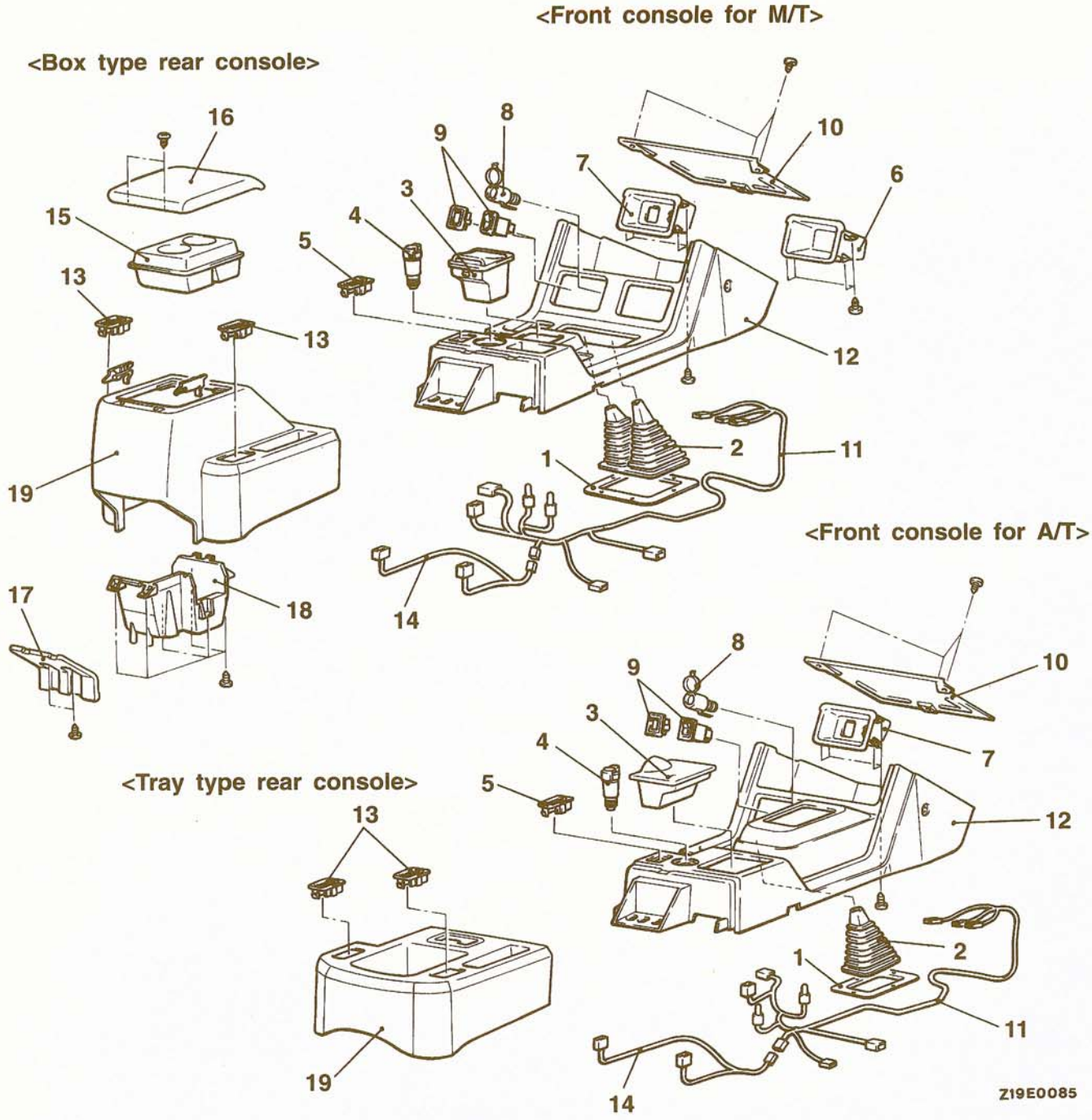


**Front console assembly disassembly steps**

1. Boot reinforcement
2. Boot
3. Ashtray
4. Cigarette lighter
5. Hole cover
6. Box
7. Plate
8. Accessory socket
9. Rear differential lock switch or hole cover
10. Front console cover
11. Floor console wiring harness
12. Front console

**Rear console assembly disassembly steps**

13. Hole cover
14. Rear console wiring harness
15. Cup holder
16. Lid assembly
17. Rear console cover
18. Box
19. Rear console

TSB Revision

# TRIMS

52100110070

## REMOVAL AND INSTALLATION

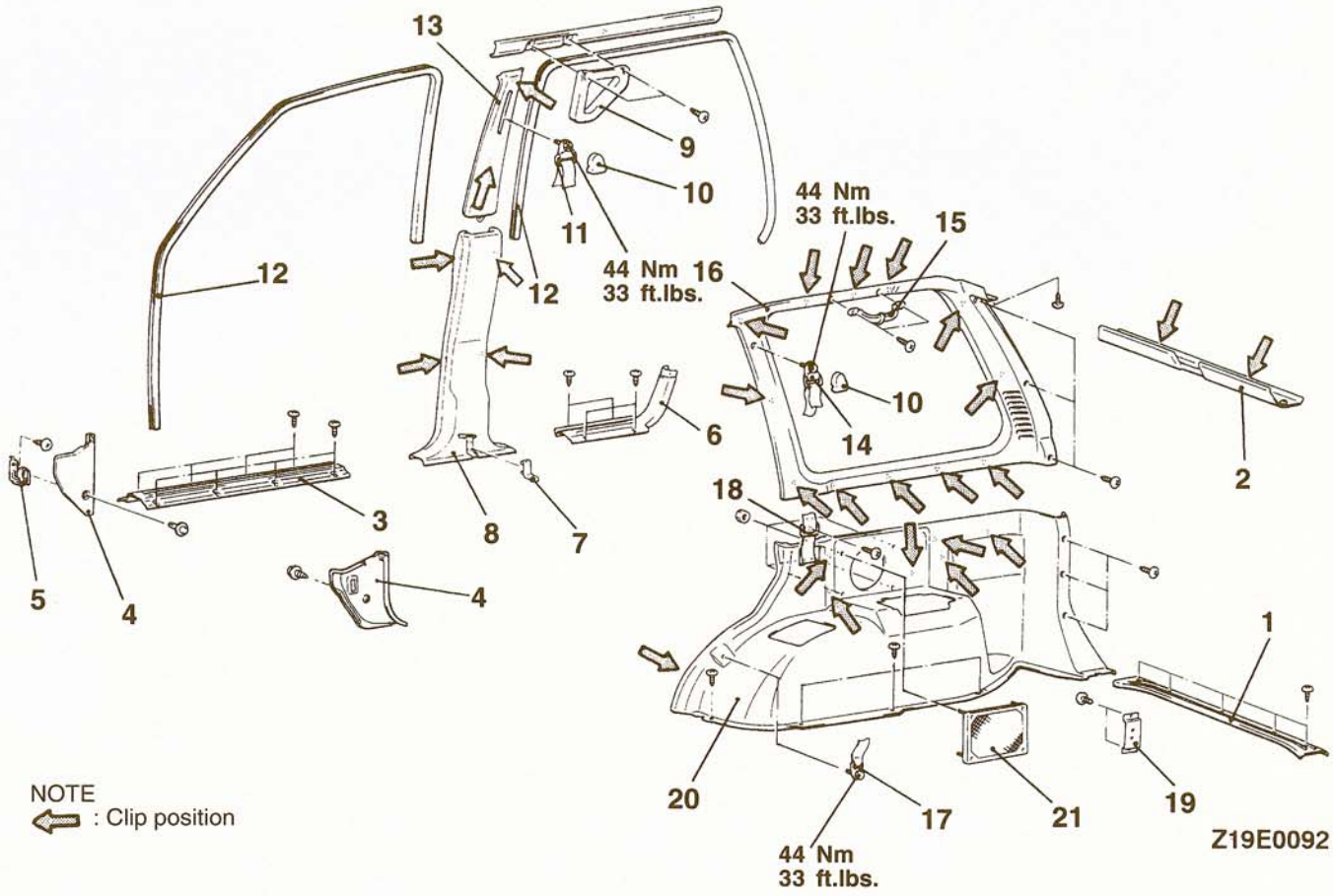


NOTE
⇦ : Clip position

1. Rear trimming plate
2. Rear roof rail trim

**Cowl side trim removal steps**

3. Front scuff plate
4. Cowl side trim
5. Cowl side bracket <RH side only>

**Center pillar trim removal steps**

3. Front scuff plate
6. Rear scuff plate
7. Belt anchor cover
8. Center pillar trim lower
9. Grip
10. Sash guide cover
11. Front seat belt sash guide
12. Door inner opening weatherstrip
13. Center pillar trim upper

**Quarter trim removal steps**

2. Rear roof rail trim
10. Sash guide cover
14. Rear seat belt sash guide
15. Assist grip
16. Quarter trim upper
1. Rear trimming plate
17. Rear seat belt anchor plate
18. Rear seat belt garnish
19. Cargo lamp bracket <LH side>
20. Quarter trim lower
21. Speaker garnish

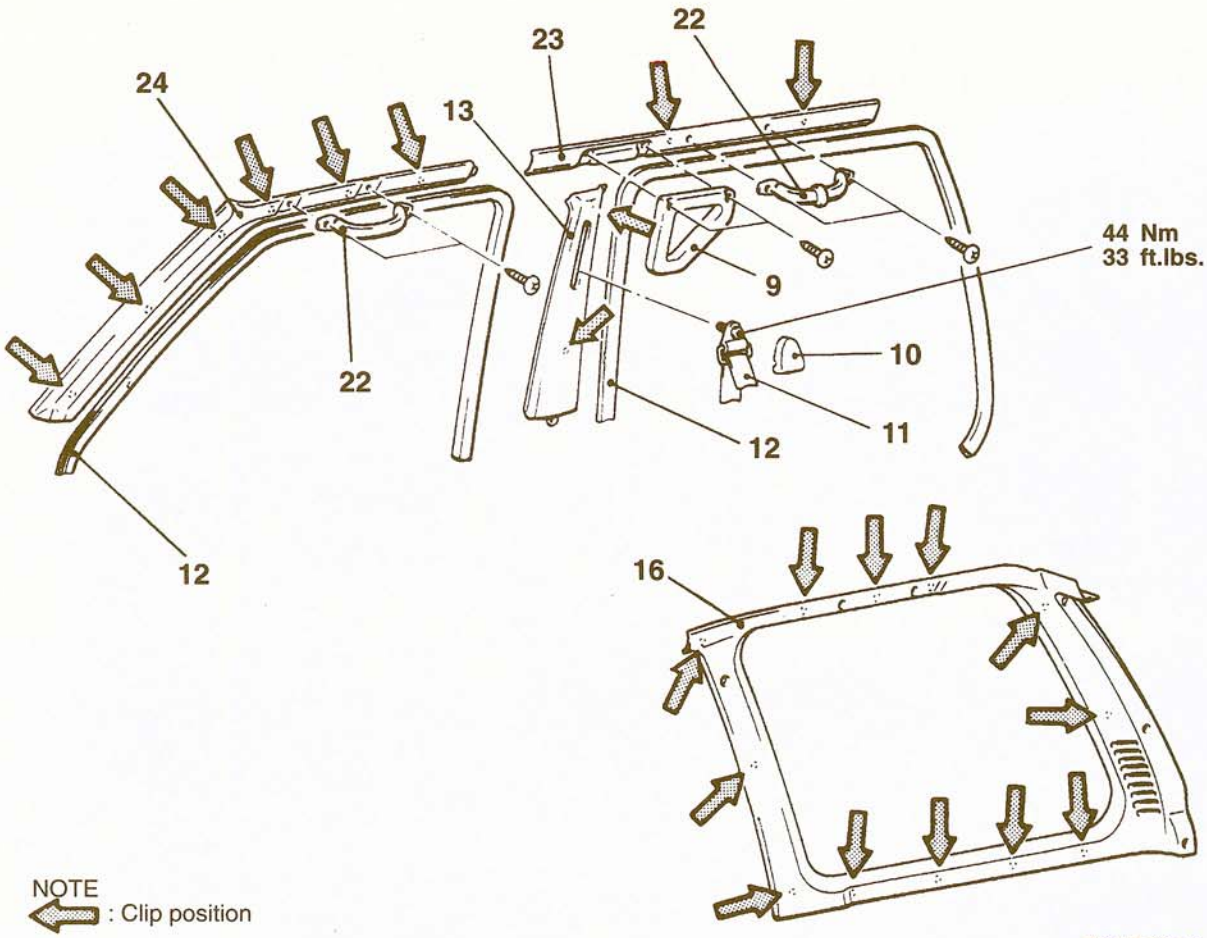


**Front pillar trim, side roof rail trim removal steps**

9. Grip
10. Sash guide cover
11. Front seat belt sash guide
12. Door inner opening weatherstrip
13. Center pillar trim upper
16. Quarter trim upper
22. Assist grip
23. Side roof rail trim
24. Front pillar trim

# HEADLINING

52100140062

## REMOVAL AND INSTALLATION

<Vehicles without sunroof>

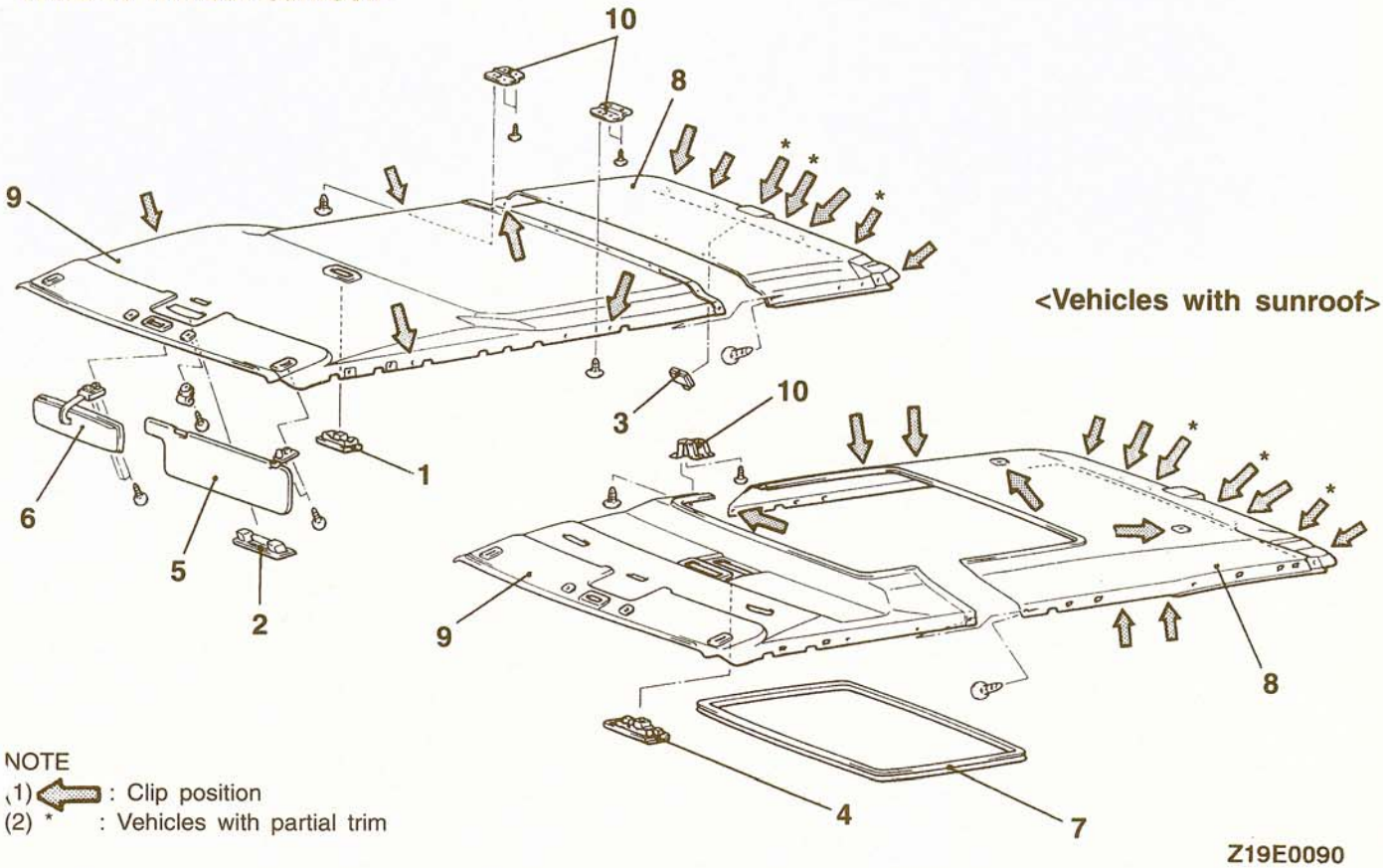


NOTE
(1) ⇦ : Clip position
(2) * : Vehicles with partial trim

Z19E0090

**Removal steps**
**<Vehicles without sunroof>**

1. Room lamp
2. Map lamp
3. Luggage compartment lamp
5. Sunvisors
6. Inside rear view mirror
- Rear roof rail trim (Refer to P.52A-7.)
- Quarter trim upper (Refer to P.52A-7.)
- Center pillar trim upper (Refer to P.52A-8.)
- Side roof rail trim (Refer to P.52A-8.)
- Front pillar trim (Refer to P.52A-8.)

8. Rear headlining
9. Front headlining
10. Joint bracket

**Removal steps**
**<Vehicles with sunroof>**

1. Room lamp
2. Map lamp
3. Luggage compartment lamp
4. Sunroof switch
5. Sunvisors
6. Inside rear view mirror
- Rear roof rail trim (Refer to P.52A-7.)
- Quarter trim upper (Refer to P.52A-7.)
- Center pillar trim upper (Refer to P.52A-8.)
- Side roof rail trim (Refer to P.52A-8.)
- Front pillar trim (Refer to P.52A-8.)

7. Headlining trim
8. Rear headlining
9. Front headlining
10. Joint bracket

# FRONT SEAT

52200130055

## REMOVAL AND INSTALLATION




**Front seat assembly removal steps**

1. Headrestraint
2. Seat under tray <passenger's side only, except Van>

▶B◀ 3. Seat anchor covers
▶A◀ 4. Front seat assembly

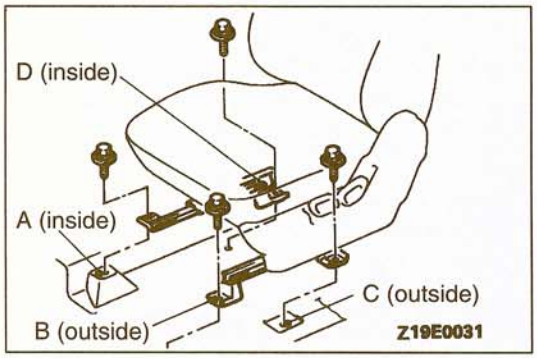


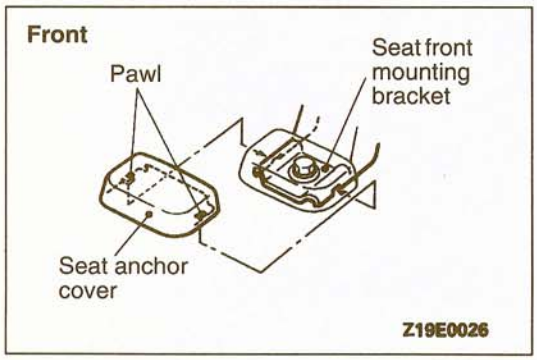


## INSTALLATION SERVICE POINTS

### ▶A◀ FRONT SEAT ASSEMBLY INSTALLATION

(1) Install the lower rail so that it matches the left and right front seat mounting hole positions, and lock both sides of the seat adjustor.
(2) Temporally tighten the seat mounting bolts in the order A, B, C, and D, and then tighten them to the specified torque.
(3) After installing the front seat assembly, check that the seat moves backward and forwards smoothly, and that the seat adjuster locks on both sides in all lock positions.

NOTE
The illustration shows the driver's side seat.

### ▶B◀ SEAT ANCHOR COVER INSTALLATION

(1) Press down the front seat anchor cover from the top of the seat front mounting bracket, and hang the anchr cover tab on the bracket.

TSB Revision

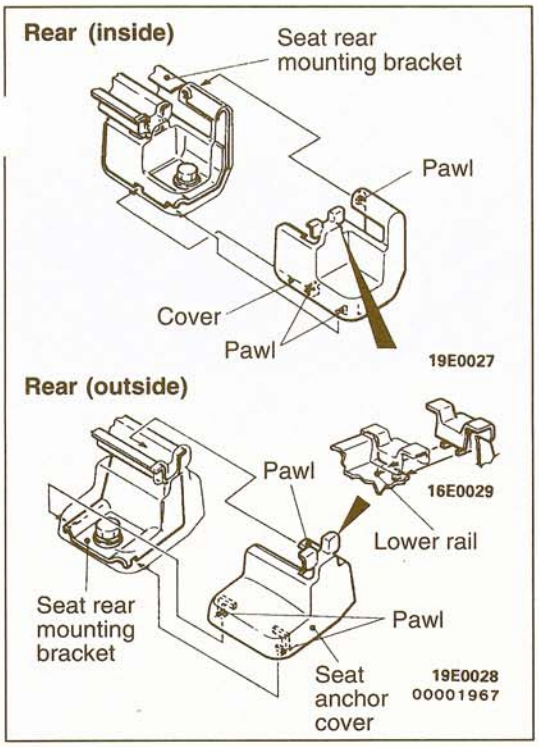


(2) Insert the rear seat anchor cover from the rear of the seat rear mounting bracket, and hang the anchor cover tab on the bracket while inserting into the lower rail.

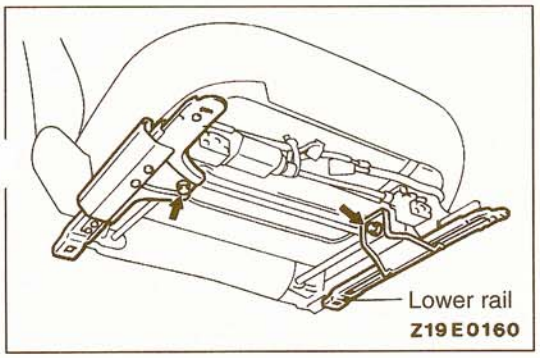


**FRONT SEAT ASSEMBLY WHEN THERE IS A MALFUNCTION IN THE POWER SEAT SLIDE MECHANISM REMOVAL AND INSTALLATION POINTS** 52200480013

If removal of the seat mounting bolt is impossible when there is a malfunction in the slide motor or the side switch and the seat cannot slide, remove and install the front seat assembly by the following procedure.

(1) Remove the seat cushion assembly. (Refer to P.52-13.)
(2) Remove the power seat relay box. (Refer to P.52-13.)
(3) Remove the bolts below the seat cushion as shown in the illustration
(4) Insert a flat-tipped screwdriver in between the lower rail and the nut housing , and detach the nut housing form the lower rail hole and turn it.
(5) Slide the seat, and remove the seat mounting bolts.

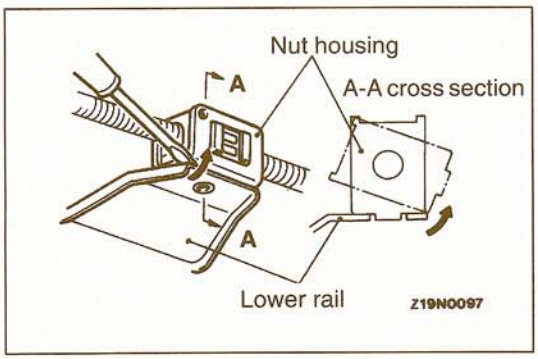


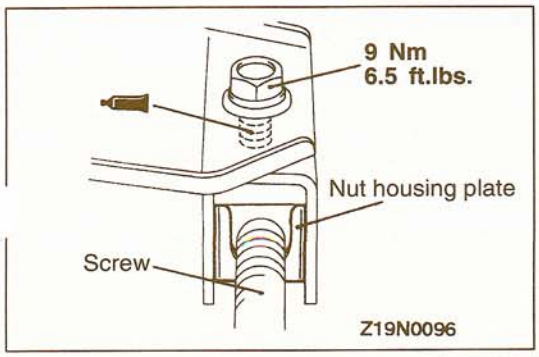


(6) When reusing the power height adjuster assembly, apply specified adhesive to the mounting bolt, and tighten to the specified torque.

**Specified adhesive:**
**3M Stud Locking Part No. 4170 of equivalent**

**Caution**
**Match to the left and right nut hosing positions.**

## DISASSEMBLY AND REASSEMBLY <MANUAL SEAT>

52200150075

**Pre-removal and Post-installation Operation**
- Front Inner Seat Belt Assembly Removal and Installation (Refer to P.52A-18.)

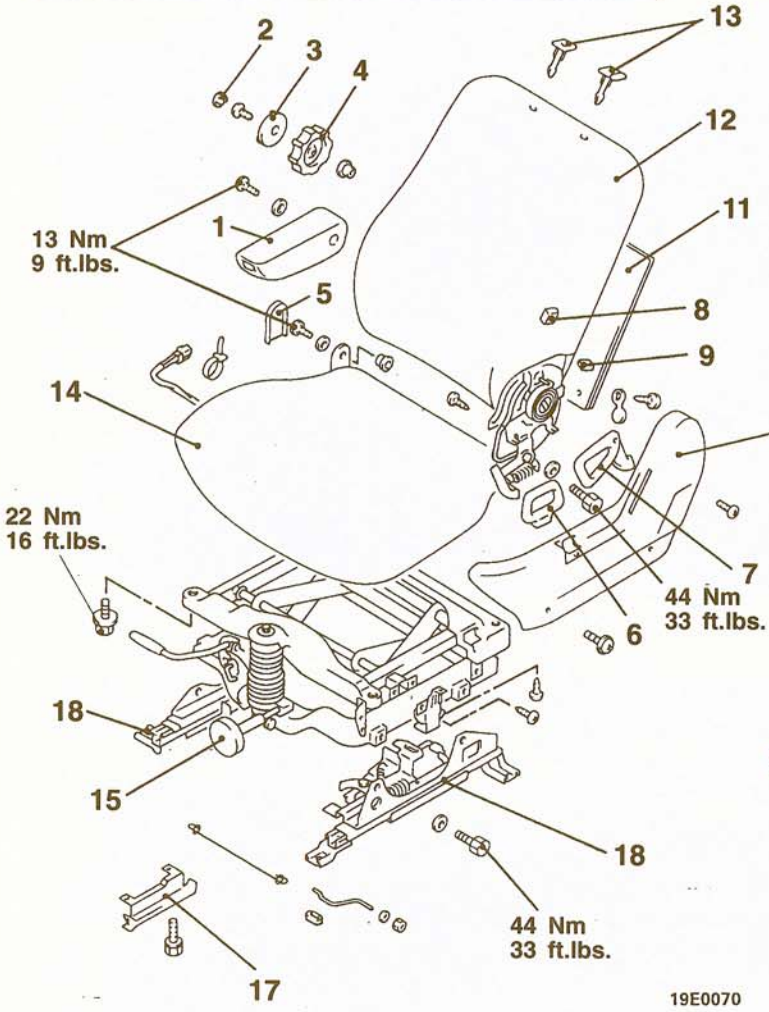


<Fixed seat type>

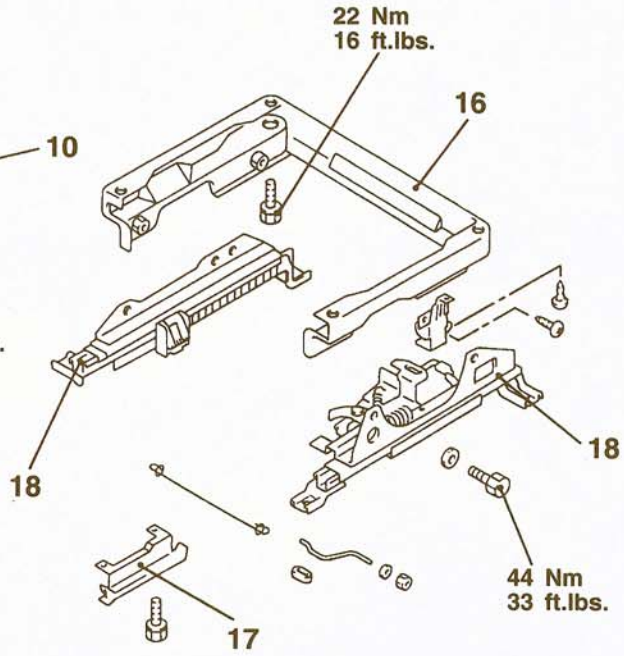


**Disassembly steps**

1. Armrest assembly
2. Side support lever cap
3. Side support lever
4. Lumber support lever
5. Free hinge protector
6. ◀A▶ Slide knob
7. Reclining knob
8. Reclining memory knob
9. Walk-in knob
10. Shield cover
11. Back pocket assembly
12. Seatback assembly
13. Headrestraint guide
14. Seat cushion assembly
15. Suspension assembly
16. Leg assembly
17. Under tray bracket
18. Seat adjuster

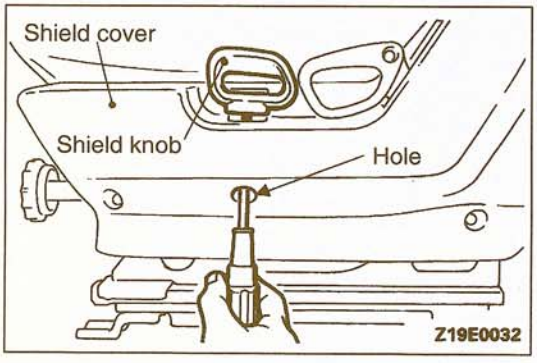


## DISASSEMBLY SERVICE POINT

### ◀A▶ SLIDE KNOB REMOVAL

Pass a screwdriver through the shield cover hole and remove the slide knob mounting screw.

**TSB Revision**

## DISASSEMBLY AND REASSEMBLY <POWER SEAT>

52200150082

**Pre-removal and Post-installation Operation**
- Front Inner Seat Belt Assembly Removal and Installation (Refer to P.52A-18.)

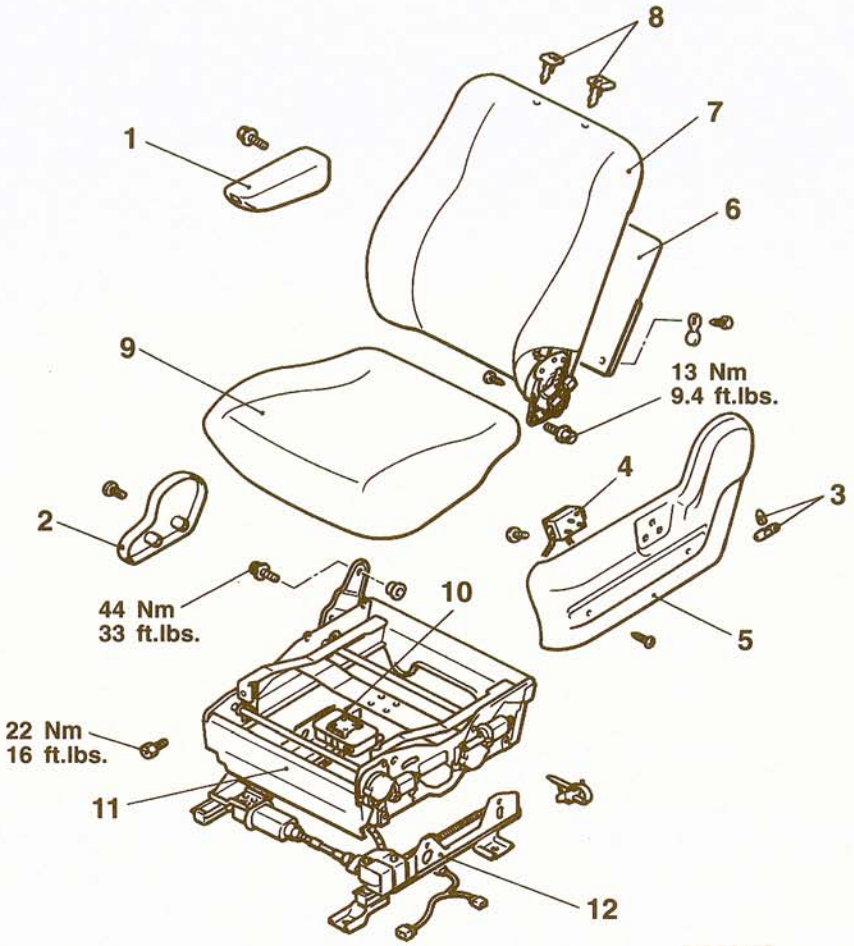


**Disassembly steps**

1. Armrest assembly
2. Free hinge protector
3. Power seat lever
4. Power seat switch
5. Shield cover
6. Back pocket assembly
7. Seatback assembly
8. Headrestraint guide
9. Seat cushion assembly
10. Power seat relay box
11. Leg assembly
12. Power seat adjuster

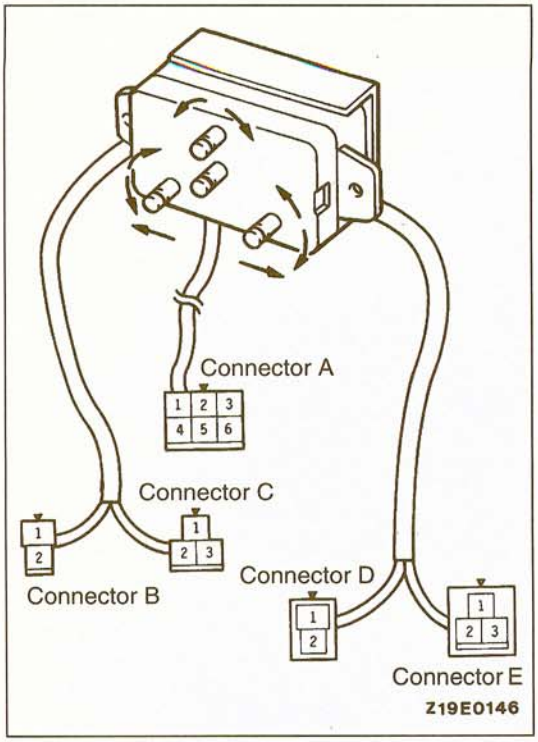


## INSPECTION

52200160047

### POWER SEAT SWITCH

Operate the power seat switch and check for continuity.

| Switch Position | | Connector A terminal | | | | | | Connector B terminal | | Connector C terminal | | | Connector D terminal | | Connector E terminal | | |
|---|---|---|---|---|---|---|---|---|---|---|---|---|---|---|---|---|---|
| | | 1 | 2 | 3 | 4 | 5 | 6 | 1 | 2 | 1 | 2 | 3 | 1 | 2 | 1 | 2 | 3 |
| Reclining switch | Forward | ○ | | ○ | | | | | | | | | | | | | |
| | Backward | ○ | | | | | ○ | | | | | | | | | | |
| Slide switch | Forward | ○ | ○ | | | | | | | | | | | | | | |
| | Backward | ○ | | | | ○ | | | | | | | | | | | |
| Height switch (Front) | Up | ○ | | | | | | ○ | | | | ○ | | | | | |
| | Down | ○ | | | | | | ○ | ○ | | ○ | | | | | | |
| Height switch (Rear) | Up | ○ | | | | | | | | | | | ○ | | | ○ | |
| | Down | ○ | | | | | | | | | | | | ○ | | | ○ |
| All switches | OFF | | ○ | ○ | ○ | ○ | ○ | | | ○ | | | | | ○ | | |

**TSB Revision**

# SECOND SEAT

52200230014

## REMOVAL AND INSTALLATION

<Type A>

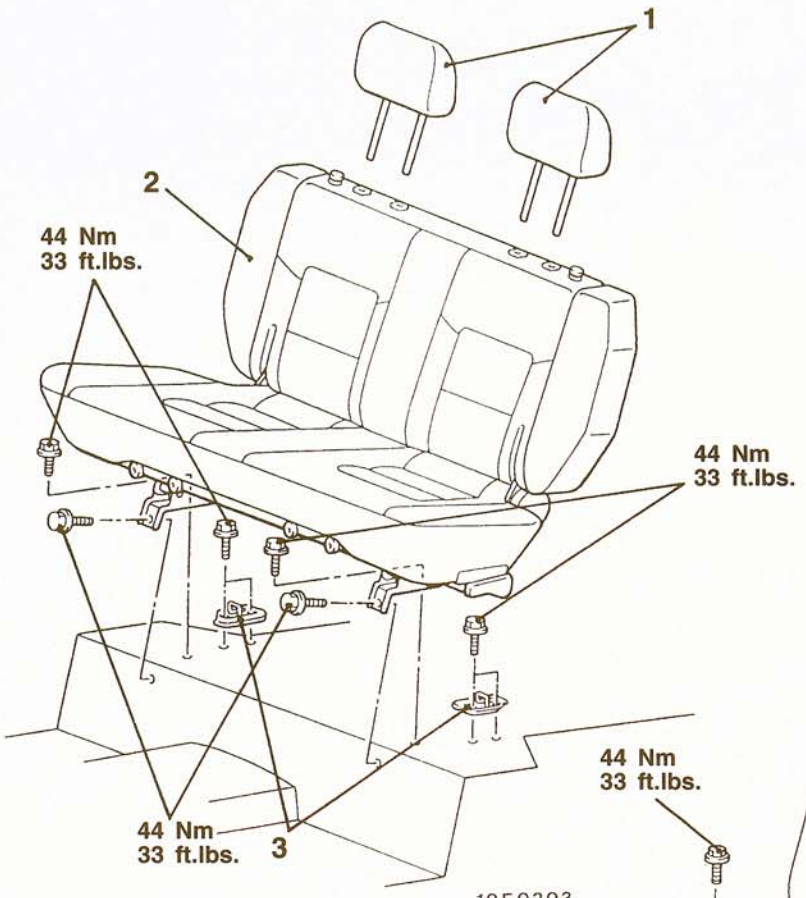


<Type B>

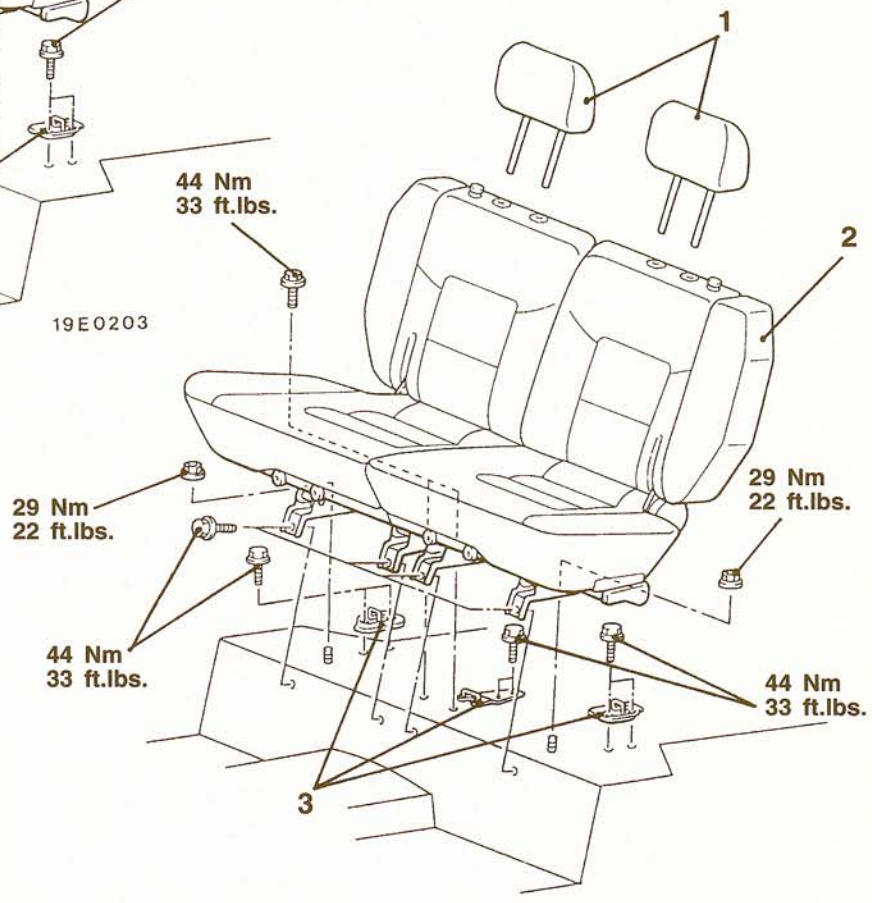


**Removal steps**

1. Headrestraint
2. Rear seat assembly
3. Striker

**TSB Revision**

## DISASSEMBLY AND REASSEMBLY

52200250010

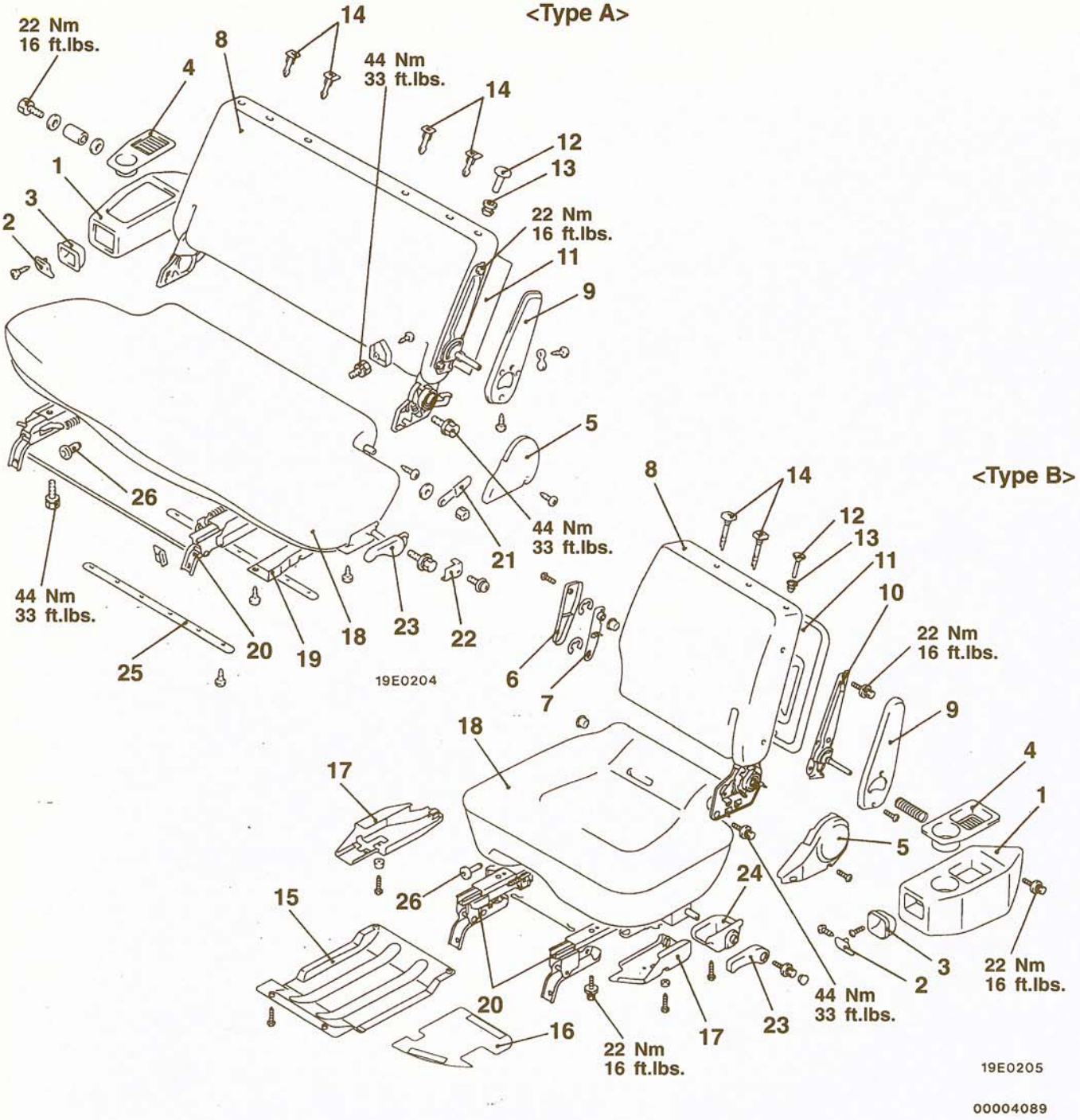


**Disassembly steps**

1. Side back assembly
2. Side back knob
3. Side back garnish
4. Side back tray
5. Reclining cover
6. Hinge cover
7. Hinge plate assembly
8. Seat back assembly
9. Rail cover
10. Side back hinge bracket
11. Seat back trim
12. Knob
13. Knob guide
14. Headrestraint guide
15. Cushion board
16. Cushion mat
17. Seat adjuster cover
18. Seat cushion assembly
19. Slide leg cover
20. Seat adjuster
21. Full flat knob
22. Cover
23. Knob
24. Cover
25. Cushion trim moulding
26. Headrestraint guide

**TSB Revision**

# THIRD SEAT

52200280019

## REMOVAL AND INSTALLATION

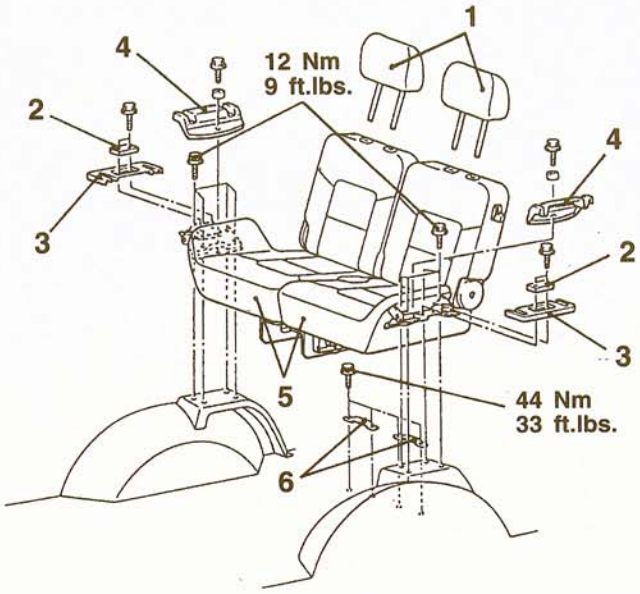


A19E0162

**Removal steps**

1. Headrestraint
2. Damper
3. Seat anchor cover (A)
4. Seat anchor cover (B)
5. Third seat assembly
6. Striker

## DISASSEMBLY AND REASSEMBLY

52200300012

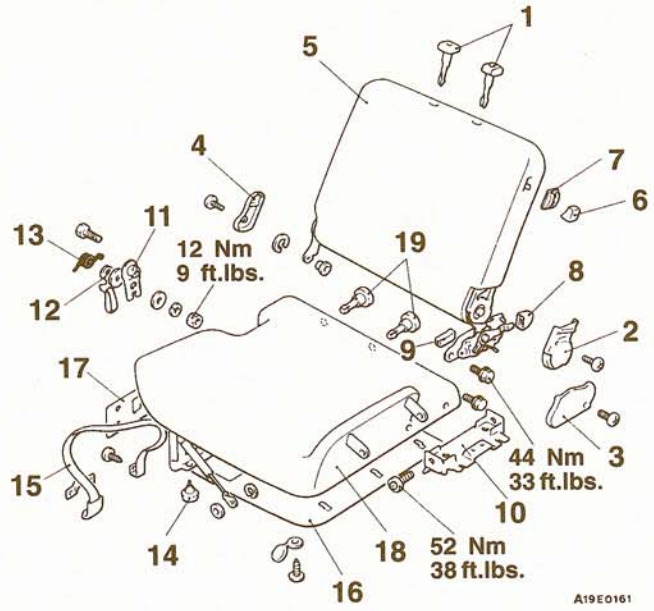


A19E0161

**Disassembly steps**

1. Headrestraint guide
2. Reclining cover
3. Reclining cushion cover
4. Free hinge protector
5. Seat back assembly
6. Knob
7. Garnish
8. Full flat knob
9. Seat belt protector
10. Attaching bracket
11. Lock plate
12. Catch assembly
13. Torsion spring
14. Bumper
15. Strap assembly
16. Back trim
17. Cushion side trim
18. Seat cushion assembly

**TSB Revision**

# FRONT SEAT BELT

52300130065

## REMOVAL AND INSTALLATION

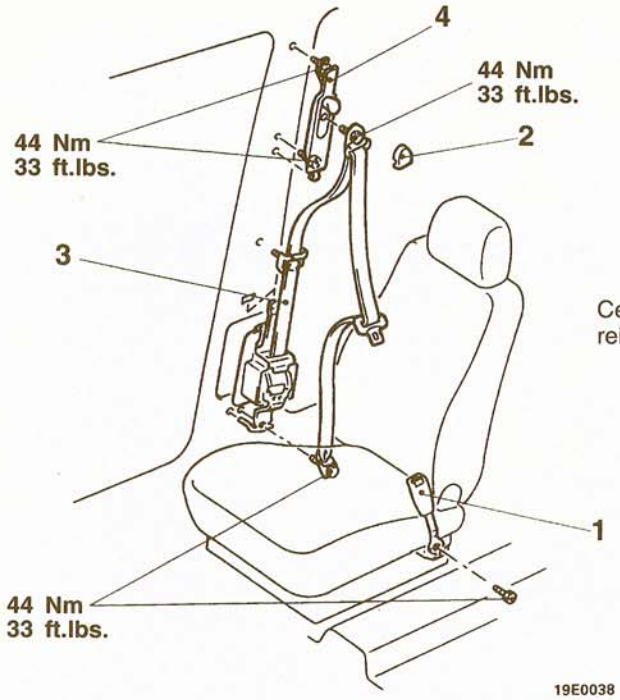


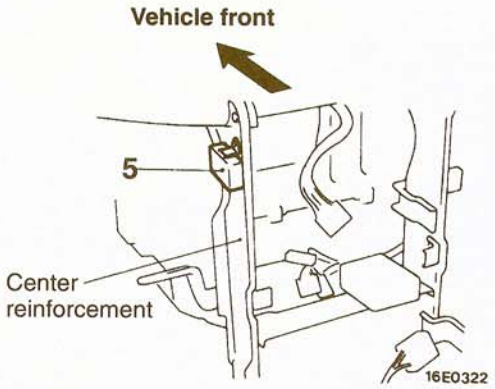


**Removal steps**

- ▶C◀ 1. Inner seat belt assembly
- 2. Sash guide cover
  - Center pillar trim, lower (Refer to P.52A-7.)
  - Center pillar trim, upper (Refer to P.52A-7.)
- ▶B◀ 3. Outer seat belt assembly
- ▶A◀ 4. Adjustable seat belt anchor

**Buzzer assembly removal steps**

- Instrument panel assembly (Refer to P.52A-2.)
- 5. Buzzer assembly (built-in seat belt warning timer)

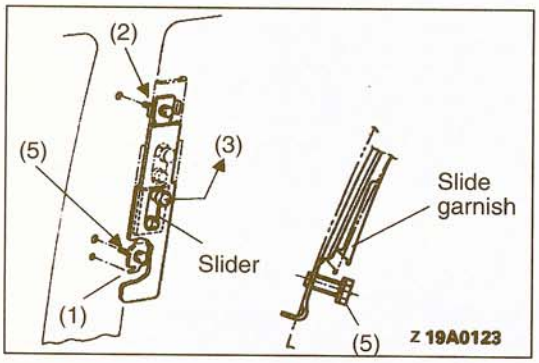


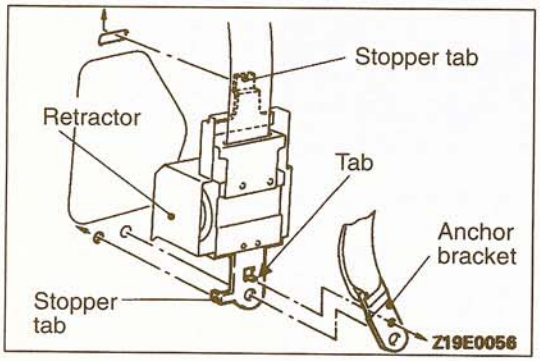


## INSTALLATION SERVICE POINT

### ▶A◀ ADJUSTABLE SEAT BELT ANCHOR INSTALLATION

(1) Securely fit the tab of the adjustable seat belt anchor into the hole in the center pillar.
(2) Provisionally tighten the installation bolt at the upper side.
(3) Lock the slider at the uppermost position.
(4) Raise the slide garnish to the upper side.
(5) Tighten the lower side mounting bolt to the specified torque.
(6) Lower the slide garnish and slider, and tighten the upper side mounting bolt to the specified torque.

### ▶B◀ OUTER SEAT BELT ASSEMBLY INSTALLATION

(1) Securely insert the retractor stopper tab into the body hole.
(2) Securely insert the retractor bracket tab into the anchor bracket hole.

TSB Revision

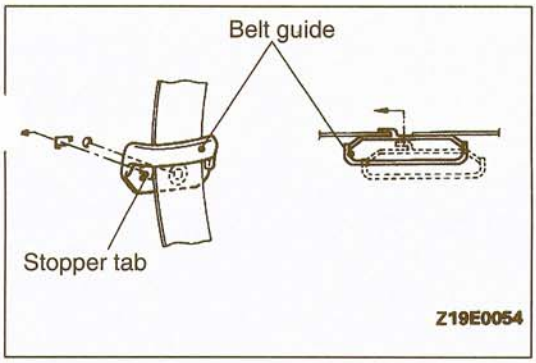


(3) Securely insert the belt guide tab into the body hole.

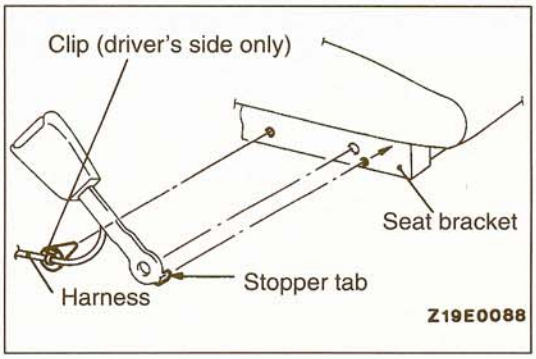


### ▶C◀ INNER SEAT BELT ASSEMBLY INSTALLATION

Securely insert the stopper tab into the seat bracket hole.

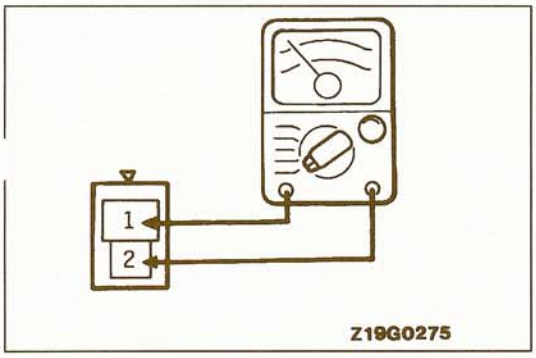


## INSPECTION

52300140037

### BUCKLE SWITCH

(1) Disconnect the buckle switch connector.
(2) Check the continuity between the terminals.

| Terminal | 1 | 2 |
|---|---|---|
| Buckle unlock | ○ | ○ |
| Buckle lock | | |

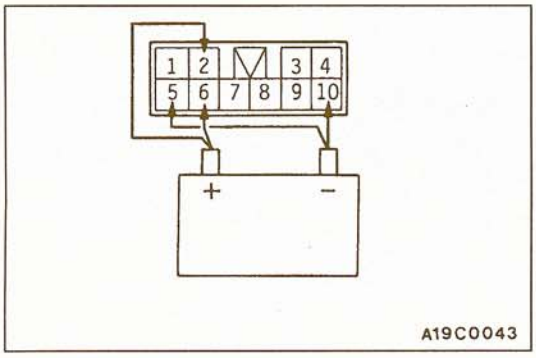


### BUZZER

(1) Apply battery positive voltage between terminals (2), (6) and (10).
(2) Check that the buzzer sounds intermittently when terminal (5) is grounded.

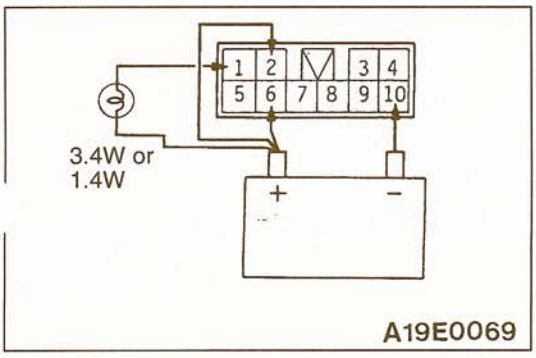


### SEAT BELT WARNING TIMER

(1) Apply battery positive voltage between terminals (2) – (10).
(2) Connect a bulb between terminal (1) and the positive battery terminal.
(3) Check that the bulb illuminates for 6 seconds when the terminal (6) is connected to the positive battery terminal.

# SECOND SEAT BELT

52300190018

## REMOVAL AND INSTALLATION

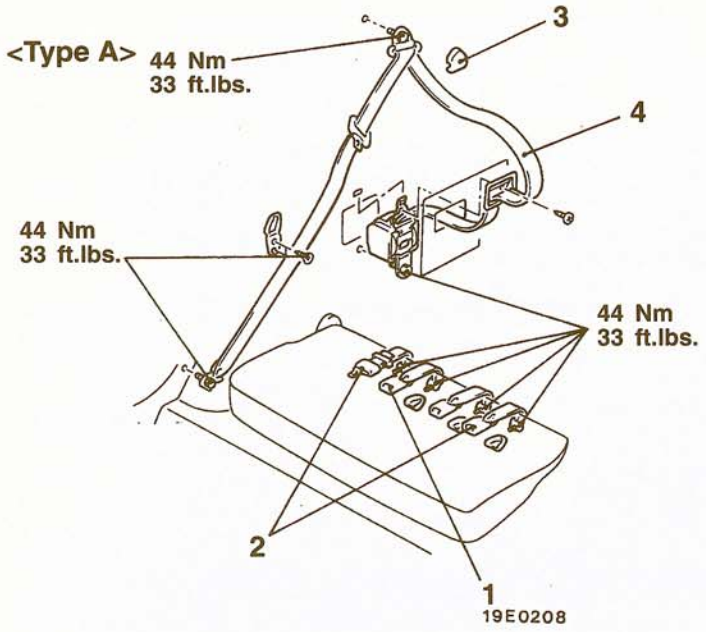


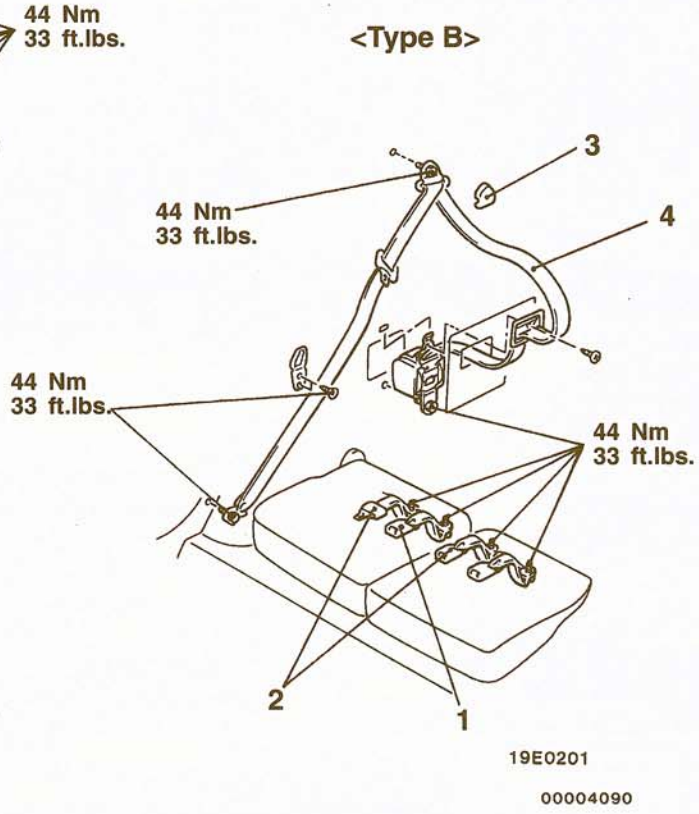


00004090

**Removal steps**

- Seat cushion board <Type B only> (Refer to P.52A-16.)

1. Inner seat belt assembly
2. Center seat belt assembly
3. Sash guide cover
   - Quarter trim lower (Refer to P.52A-7.)

▶A◀ 4. Outer seat belt assembly

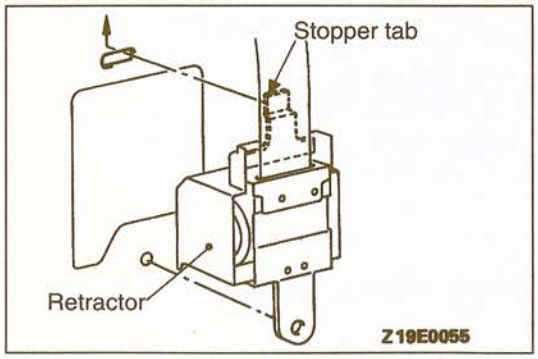


## INSTALLATION SERVICE POINT

### ▶A◀ OUTER SEAT BELT ASSEMBLY INSTALLATION

Securely insert the retractor stopper tab into the body hole.

TSB Revision 96-52A-003

# THIRD SEAT BELT

52300220014

## REMOVAL AND INSTALLATION

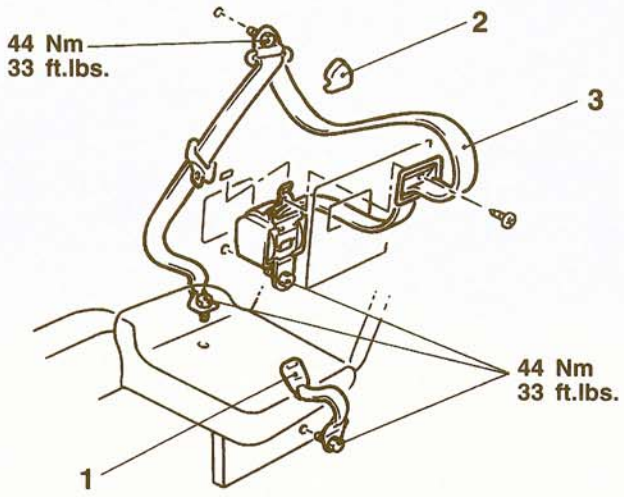


Z19E0040

**Removal steps**

1. Inner seat belt assembly
2. Sash guide cover
   - Quarter trim, lower (Refer to P.52A-7.)

▶A◀ 3. Outer seat belt assembly

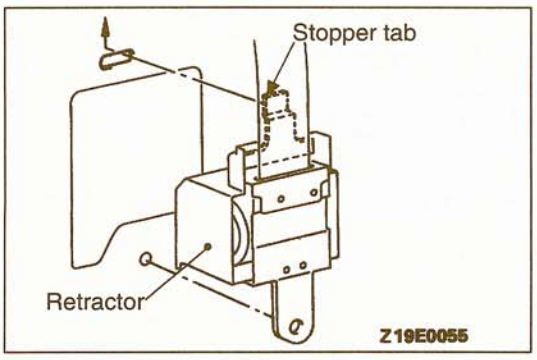


Z19E0055

## INSTALLATION SERVICE POINT

### ▶A◀ OUTER SEAT BELT ASSEMBLY INSTALLATION

Securely insert the retractor stopper tab into the body hole.

TSB Revision

NOTES

# SUPPLEMENTAL RESTRAINT SYSTEM (SRS)

## CONTENTS

52409000056


**AIR BAG MODULE DISPOSAL PROCEDURES ..... 54**
- Deployed Air Bag Module Disposal ..... 58
- Undeployed Air Bag Module Disposal ..... 54

**AIR BAG MODULE AND CLOCK SPRING ..... 48**

**COMPONENT SERVICE ..... 41**

**FRONT IMPACT SENSORS ..... 42**

**GENERAL INFORMATION ..... 2**
- Circuit Diagram ..... 12
- Component Location ..... 14
- Configuration Diagrams ..... 8
- Connector Construction ..... 10
- Construction Diagram ..... 3
- Introduction ..... 2
- Schematic ..... 7
- Warning/Caution Labels ..... 4

**MAINTENANCE ..... 38**

**POST-COLLISION DIAGNOSIS ..... 38**

**SPECIAL TOOLS ..... 17**

**SERVICE PRECAUTIONS ..... 15**

**SERVICE SPECIFICATIONS ..... 16**

**SRS DIAGNOSIS UNIT (SDU) ..... 45**

**TEST EQUIPMENT ..... 17**

**TROUBLESHOOTING ..... 18**


**CAUTION**

- **Carefully read and observe the information in the SERVICE PRECAUTIONS (P.52B-15.) Prior to any service.**
- **For information concerning troubleshooting or maintenance, always observe the procedures in the Troubleshooting (P.52B-19.) or the Maintenance (P.52B-38.) sections respectively.**
- **If any SRS components are removed or replaced in connection with any service procedures, be sure to follow the procedures in the COMPONENT SERVICE section (P.52B-41.) for the components involved.**
- **If you have any questions about the SRS, please contact your local distributor.**

# GENERAL INFORMATION

52400010072

## INTRODUCTION

The Supplemental Restraint System (SRS) is designed to supplement the front seat belts to help reduce the risk or severity of injury to the front seat occupants by activating and deploying two air bags during certain frontal collisions.
The SRS consists of: left front and right front impact sensors (located on the right and left radiator support panel); air bag modules for the driver (located in the center of the steering wheel) and for the front seat passenger (located above the glove box). Each module contains a folded air bag and an inflator unit. The SRS also contains: an SRS Diagnosis Unit with safing impact sensor (located in front of the shift lever); and SRS warning light to indicate the operational status of the SRS (located on the instrument panel); clock spring (mounted behind the steering wheel); and wiring.

The SRS is designed so that the air bags will deplo when the safing impact sensor, plus either or both of the left front and right front impact sensors simultaneously activate while the ignition switch is in the ON position. These sensors are designed to be activated in frontal or near-frontal impacts of moderate to severe force.
Only authorized service personnel should work on or around SRS components. Those personnel should read this manual carefully before starting such work. Extreme care must be used when servicing the SRS to avoid injury to service personnel (by inadvertent deployment of the air bag) or vehicle occupant (by rendering the SRS inoperative).

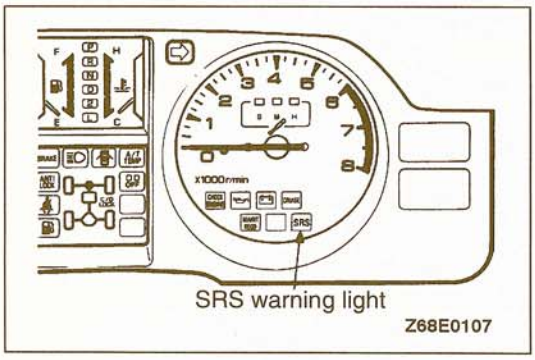


### ON-BOARD DIAGNOSTIC/SRS WARNING LIGHT FUNCTION

The diagnosis unit monitors the SRS system and stores data concerning any detected faults in the system. When the ignition key is in "ON" or "START" position, the SRS warnin light should illuminate for about 7 seconds and then turn off. That indicates that the SRS system is in operational order. If the SRS warning light does any of the following, immediate inspection by an authorized dealer is needed.

(1) The SRS warning light does not illuminate as described above.
(2) The SRS warning light stays on for more than 7 seconds.
(3) The SRS warning light illuminates while driving.

If a vehicle's SRS warning light is in any of these three conditions when brought in for inspection, the SRS system must be inspected, diagnosed and serviced in accordance with this manual.

## CONSTRUCTION DIAGRAM

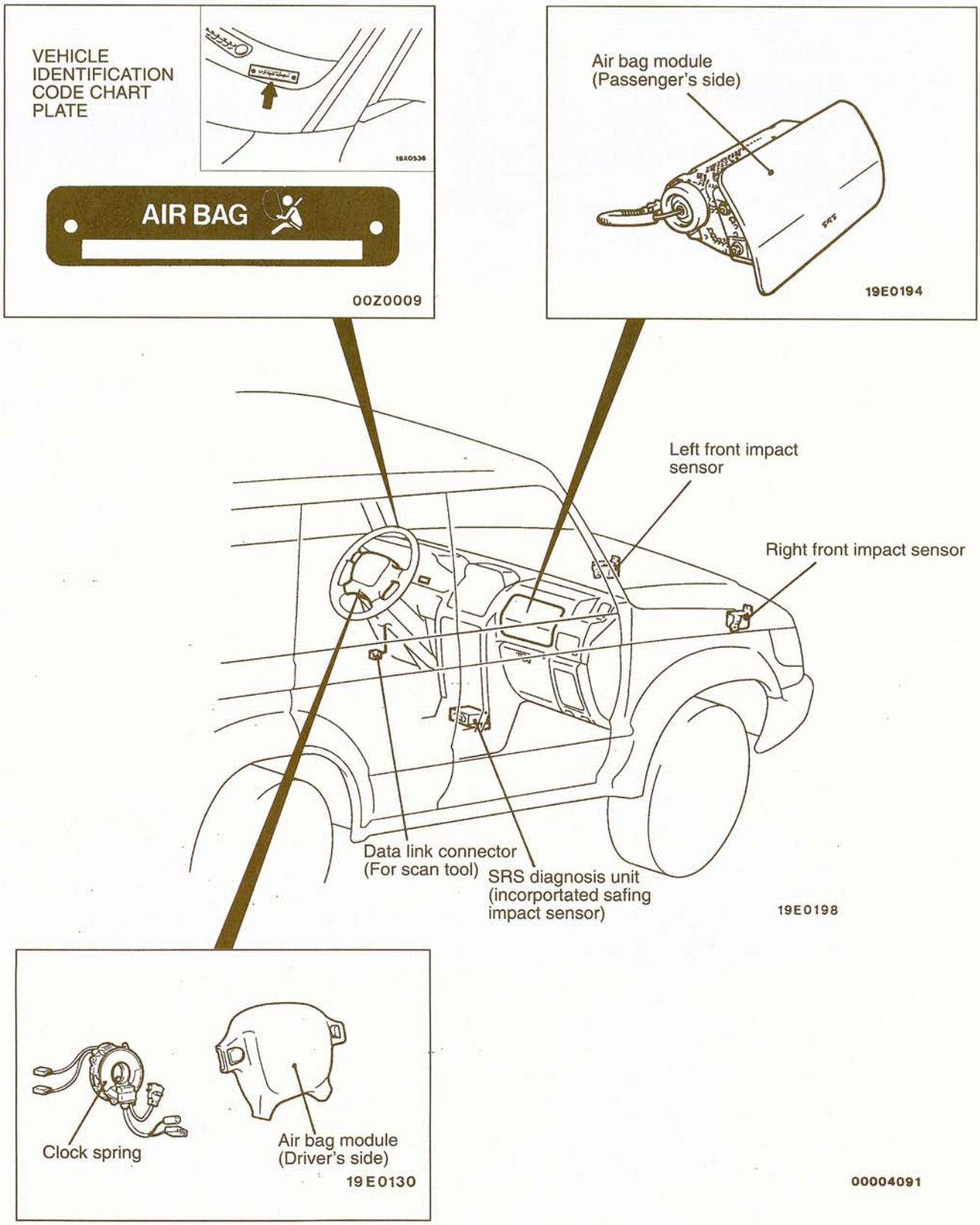


NOTE
This construction diagram displays the general view of the SRS components.
For details, refer to "Schematic" (P.52B-7.), "Configuration Diagrams" (P.52B-8.) and "Circuit Diagram" (P.52B-12.)

## WARNING/CAUTION LABELS

A number of caution labels relating to the SRS are found in the vehicle, as shown in the following illustration. Follow label instructions when servicing SRS.If labels are dirty or damaged, replace them with new ones.

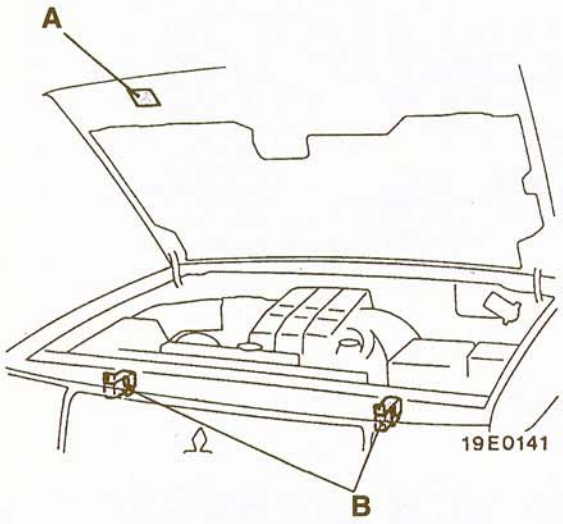


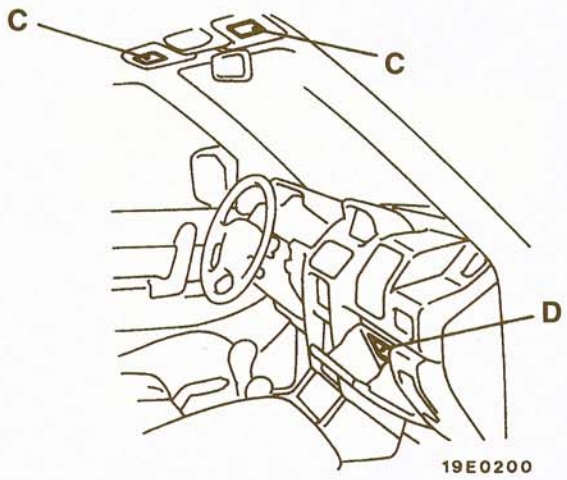


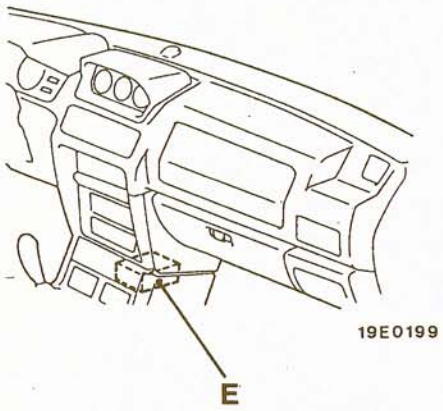


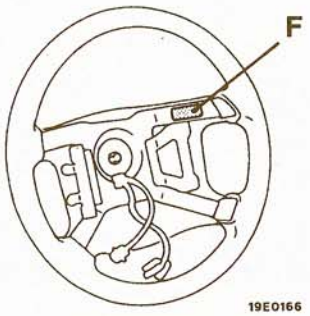


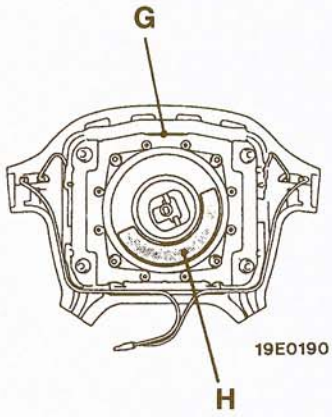


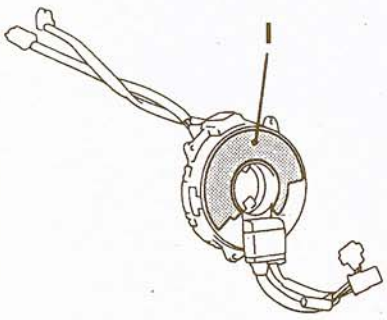


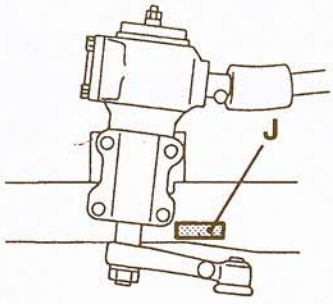


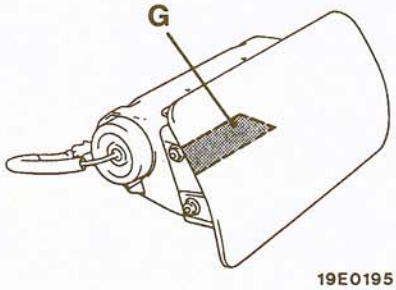


00004092

TSB Revision

| Label contents | |
|---|---|
| A | WARNING<br>This vehicle has an air bag system.<br>Refer to service manual before servicing or disassembling underhood components. Read the "SRS" section of manual for important instructions.<br>Improper service procedures can result in the air bag firing or becoming inoperative, possibly leading to injury. |
| B | CAUTION: SRS<br>Read service manual.<br>Do not drop.<br>Do not tamper or disassemble. |
| C | WARNING TO AVOID SERIOUS INJURY;<br>• For maximum safety protection in all types of crashes.<br>You must always wear your safety belt.<br>• Do not install rearward-facing child seats in any passenger seat position.<br>• Do not sit or lean unnecessarily close to the air bag.<br>• Do not place any objects over the air bag or between the air bag and yourself.<br>• See the owner's manual for further information and explanations. |
| D | AIR BAG SYSTEM INFORMATION<br>This vehicle has an air bag system which will supplement the seatbelt in certain frontal collisions. The air bag is not a substitute for the seatbelt in any type of collision. The driver and all other occupants should wear seatbelts at all times.<br>WARNING!<br>If the "SRS" warning light does not illuminate for several seconds when the ignition key is turned to "ON" or the engine is started, or if the warning light stays on while driving, take the vehicle to your nearest authorized dealer immediately. Also, if the vehicle's front end is damaged or if the air bag has deployed, take the vehicle for service immediately.<br>The air bag system must be inspected by an authorized dealer ten years after the vehicle manufacture date shown on the certification label located on the left front door -latch post or door frame. |
| | Read the "SRS" section of your owner's manual before driving for important information about operation and service of the air bag system.<br>When you are going to discard your gas generator or vehicle, please see your dealer. |
| E | CAUTION: SRS diagnosis unit<br>This unit cannot be repaired.<br>If defective, remove and replace entire unit per service manual instructions.<br>Do not disassemble or tamper.<br>See service manual for handling and storage instructions.<br>Do not drop: keep dry.<br>Failure to follow instructions could render air bag inoperative and result in driver injury. |
| F | CAUTION: SRS<br>Before replacing steering wheel, read service manual, center front wheels and align SRS clock spring neutral marks.<br>Failure to do so may render SRS system inoperative, risking serious driver injury. |
| G | WARNING: SRS<br>This air bag module cannot be repaired. Do not disassemble or tamper.<br>Do not perform diagnosis. Do not touch with electrical test equipment or probes. Refer to service manual for further instructions, and for special handling, storage and disposal procedures.<br>Tampering or mishandling can result in injury. |

| Label contents | | | |
|---|---|---|---|
| H | Danger! Poison. Keep out of the reach of children.<br>Contains sodium azide and potassium nitrate contents are poisonous and extremely flamm-able. Contact with acid, water, or heavy metals may produce harmful and irritating gases or explosive compounds. Do not dismantle, incinerate, bring into contact with electricity or store at temperatures exceeding 200°F.<br>First aid: If contents are swallowed induce vomiting. For eye contact flush eye with water for 15 minutes. If gases from acid or water contact are inhaled, seek fresh air. In every case, get prompt medical attention.<br>For additional information, see material safety data sheet (MSDS) for this product. | I | CAUTION: SRS clock spring<br>This is not a repairable part. Do not disassemble or tamper.<br>If defective, remove and replace entire unit per service manual instructions.<br>To recenter rotate clockwise until tight.<br>Then rotate in opposite direction approximately 3 1/3 turns and align ▶◀. |
| | | J | CAUTION: SRS<br>Before removal of steering gearbox, read service manual, center front wheels and remove ignition key.<br>Failure to do so may damage SRS clock spring and render SRS system inoperative, risking serious driver injury. |

## SCHEMATIC

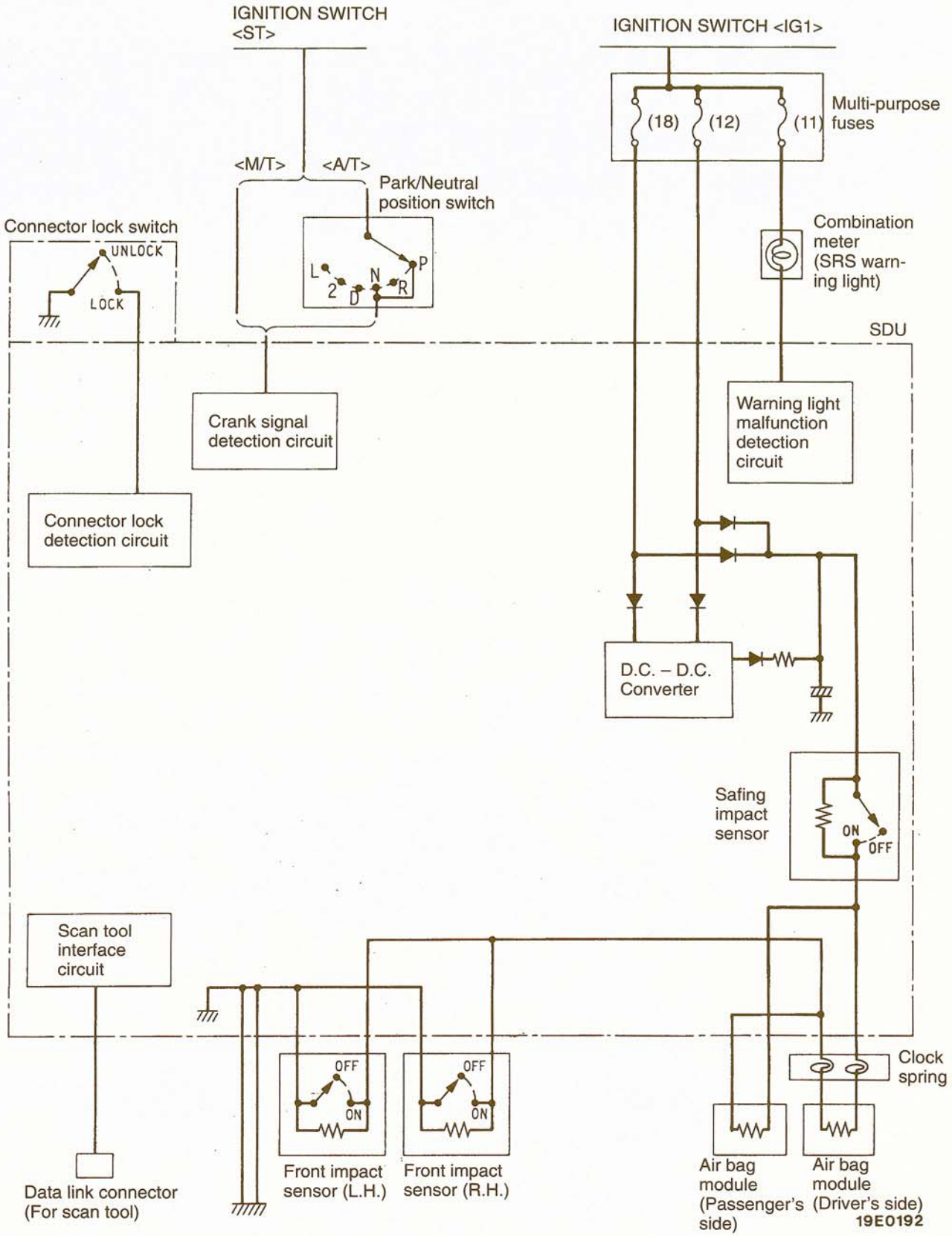


TSB Revision

## CONFIGURATION DIAGRAMS

### A Engine compartment

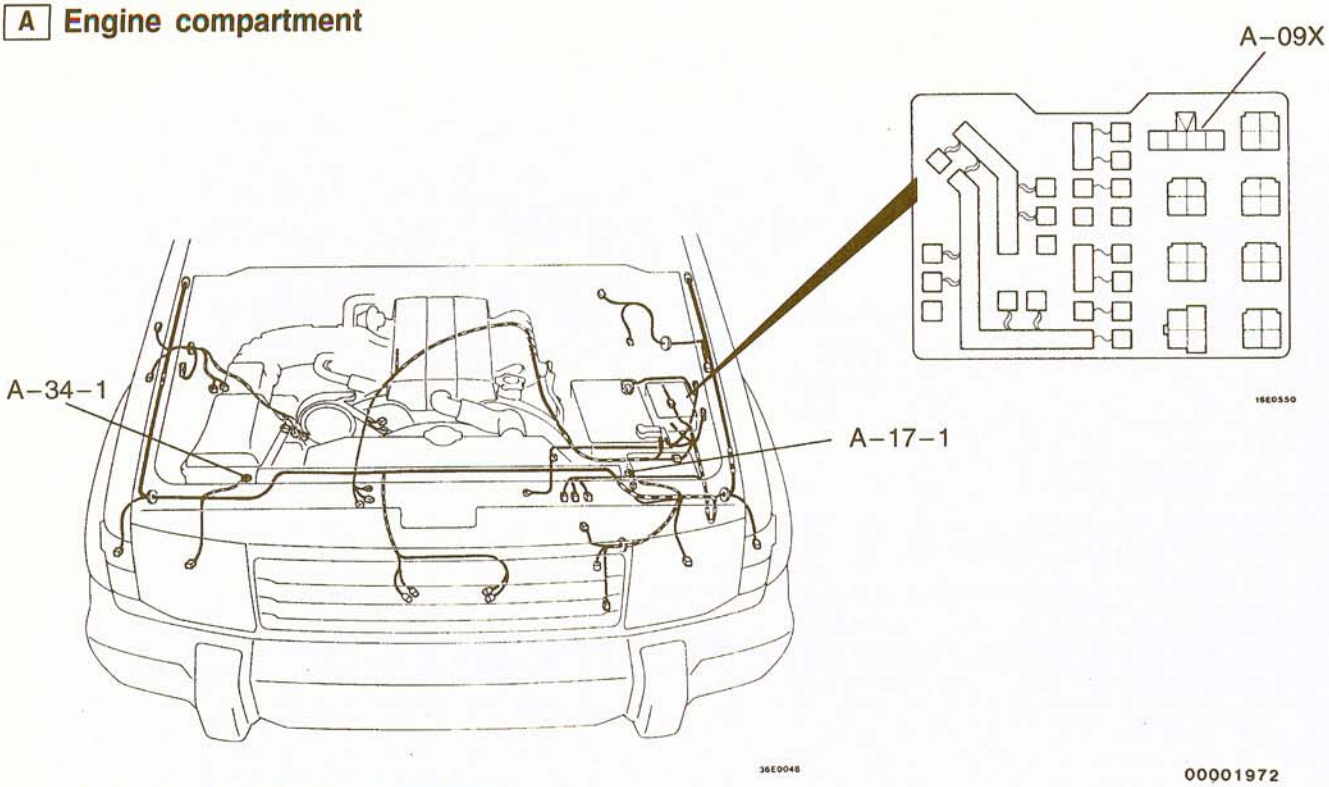


00001972

A–09X IOD or strage connector
A–17–1 Front impact sensor (L.H.)
A–34–1 Front impact sensor (R.H.)

### B Engine and transmission

**<3.0L-12 VALVE engine>**

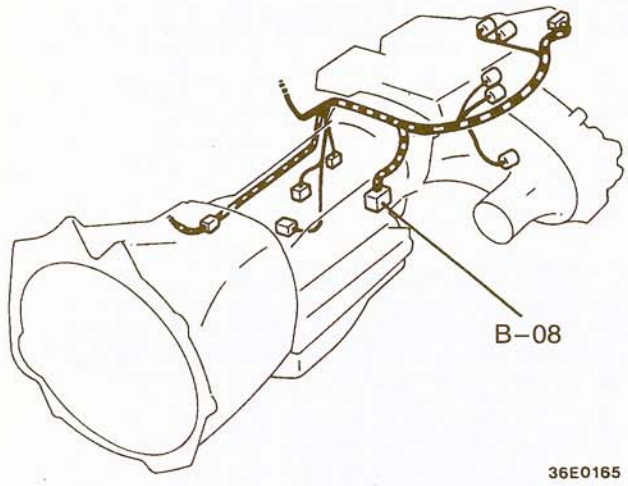


**<3.0L-24 VALVE engine, 3.5L engine>**

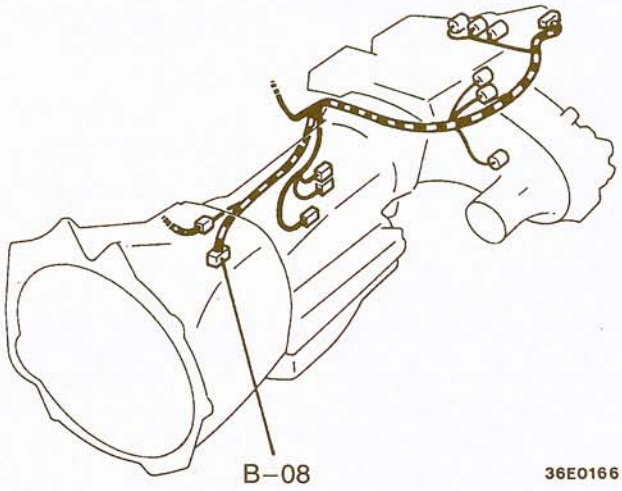


00004093

B–08 Park/Neutral position switch <A/T>

TSB Revision

## C Dash panel

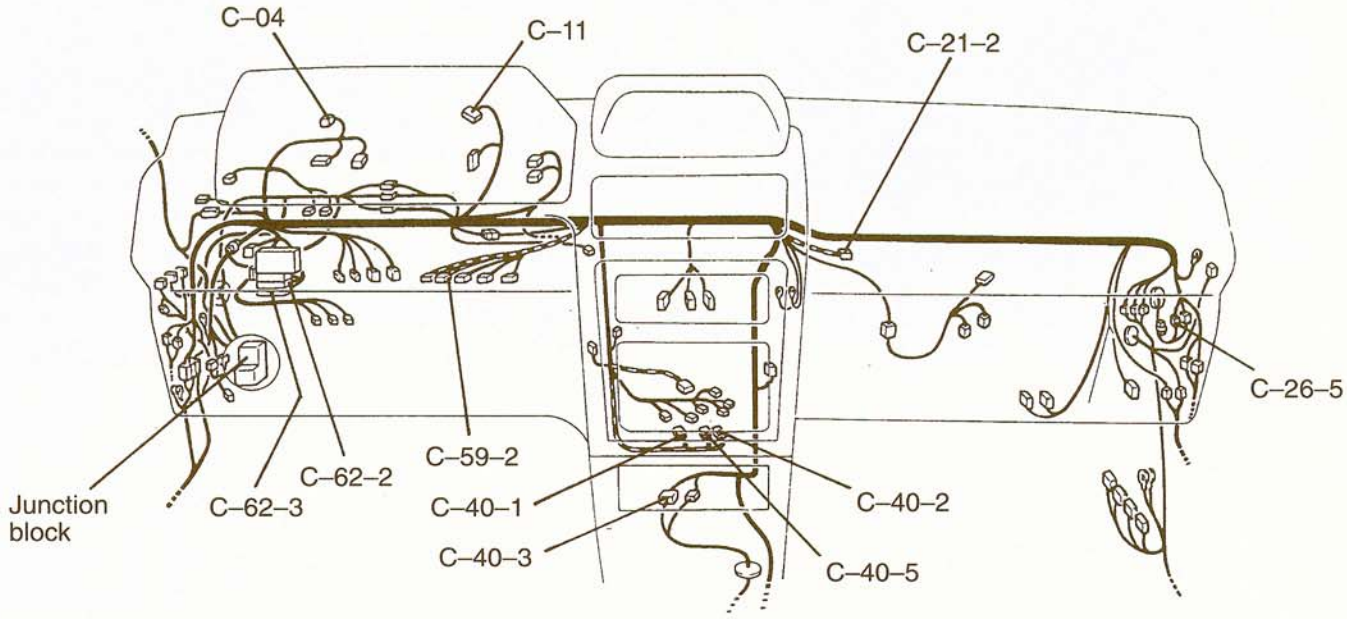


| | |
|---|---|
| C–4 | Combination meter |
| C–11 | Combination meter |
| C–21–2 | Air bag module (passenger's side) |
| C–26–5 | Front wiring harness and dash wiring harness combination |
| C–40–1 | Connectors to SRS Diagnosis Unit (2-pin red connector) |
| C–40–2 | Connectors to SRS Diagnosis Unit (14-pin red connector) |
| C–40–3 | Dash wiring harness and transmission wiring harness combination |
| C–40–5 | Connectors to SRS Diagnosis Unit (2-pin green connector) |
| C–59–2 | Clock spring |
| C–62–2 | J/C (2) |
| C–62–3 | J/C (3) |

### JUNCTION BLOCK

**Front side view**

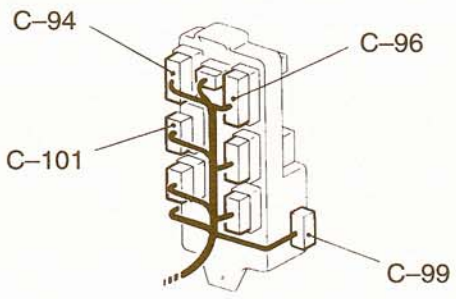


**Rear side view**

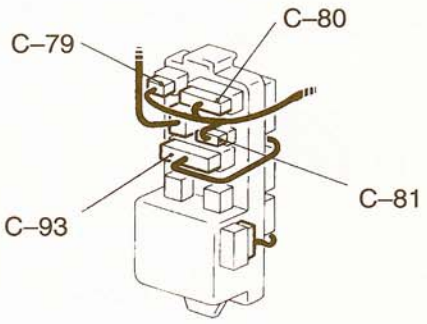


| | |
|---|---|
| C–79 | Front wiring harness and junction block |
| C–80 | Front wiring harness and junction block |
| C–81 | Front wiring harness and junction block |
| C–93 | Dash wiring harness and junction block |
| C–94 | Dash wiring harness and junction block |
| C–96 | Dash wiring harness and junction block |
| C–99 | Data link connector (For scan tool) |
| C–101 | Dash wiring harness and junction block |

**TSB Revision**

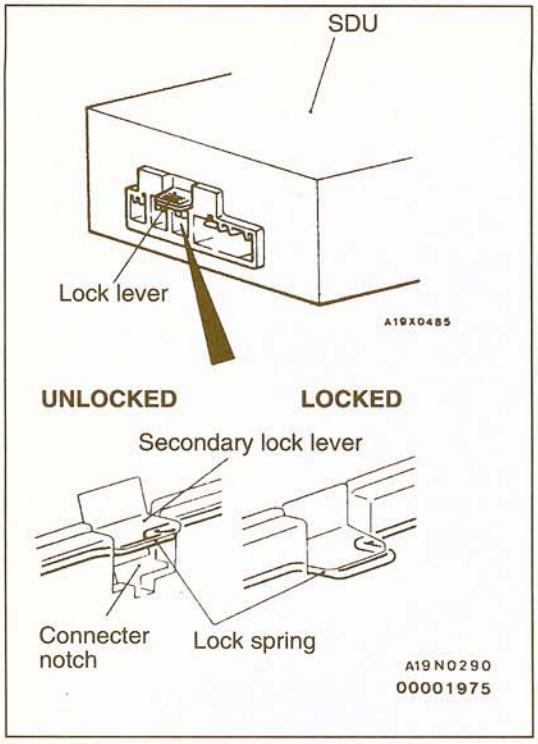


## CONNECTOR CONSTRUCTION

The connector of the SRS diagnosis unit has a double lock mechanism, fit verification mechanism and connector shorting mechanism.

### DOUBLE LOCK MECHANISM

The mechanism is composed of two mechanisms: each connector of the SRS diagnosis unit is locked to the connector of the harness, then these connectors (of the four harnesses) are locked with the secondary lock lever mounted on the connector of the SRS diagnosis unit side.
The secondary lock lever locking is done as the lock spring fits in the notch of the connector.
The operating principle is described below.

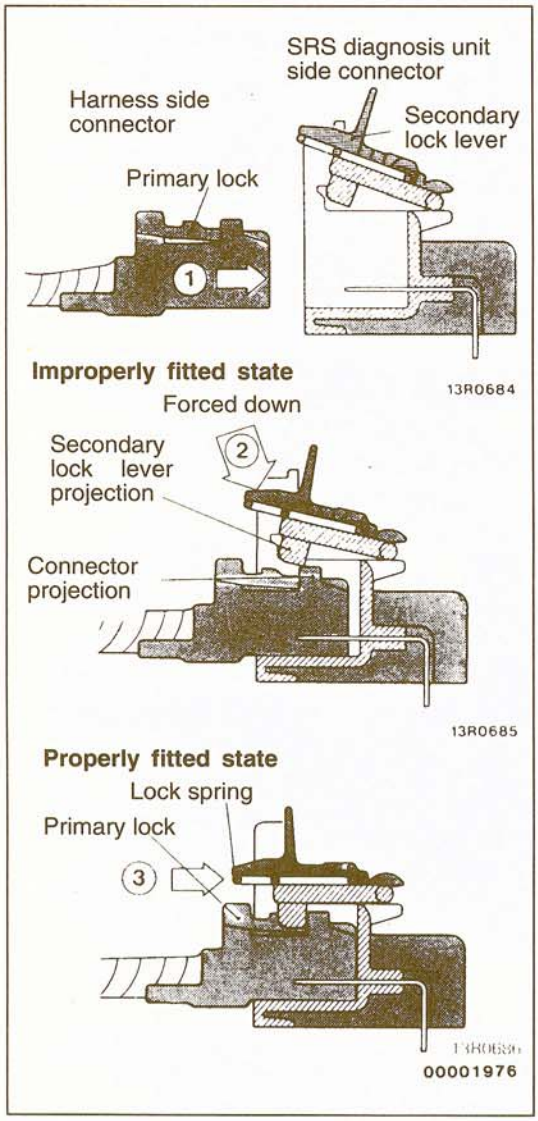


**When Connectors Are To Be Fitted**

(1) The SRS diagnosis unit and harness side connectors are connected. (Primary lock)
(2) The secondary lock lever mounted to the SRS diagnosis unit side connector, is manually pressed down until a click is heard indicating that the connectors have been locked. (Secondary lock)
If the harness and SRS diagnosis unit connectors do not properly fit, the secondary lock lever side projection and the harness side connector projection interfere with each other, making it impossible to lock the connectors.

**When Connectors Are Unlocked**

(1) Press in the lock spring with a flat tip (–) screwdriver to disengage the lock spring from the notch area of the connector, and release the lock (secondary lock) of the secondary lock lever.

**Caution**
**Forced removal of the connector without releasing the secondary lock lever will result in a damaged lock lever.**

(2) Press the primary lock of each of the harness side connectors and remove the harness side connector.

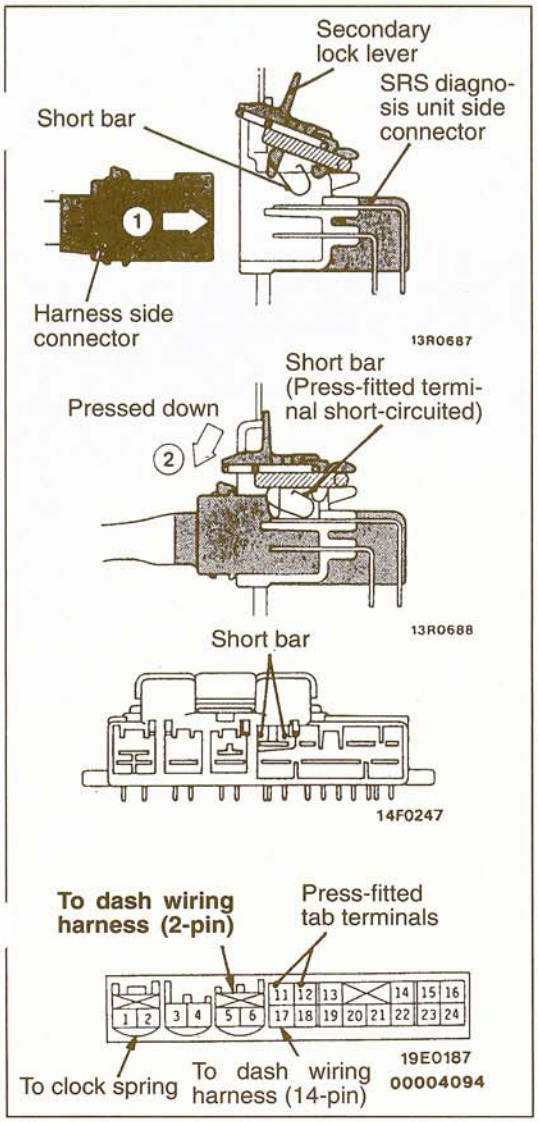


## FIT VERIFICATION MECHANISM

The mechanism is used to electrically check the engagement of the connector between the SRS diagnosis unit and the body wiring harness. The operating principle is described below.

(1) Securely connect the SRS diagnosis unit and harness side connectors and press the secondary lock lever down to lock the connectors.
(2) At this time, the short bar provided on the rear surface of the secondary lock lever produces a short circuit across terminals No. 11 and 12 of the SRS diagnosis unit. The SRS diagnosis unit supplies monitoring current to the circuit to electrically verify that the connectors have been locked.

## CONNECTOR SHORTING MECHANISM

The mechanism is designed for prevention of accidental ignition of the inflator when the clock spring connector (for the squib circuit) is removed from the SRS diagnosis unit. The operating principle is described below.

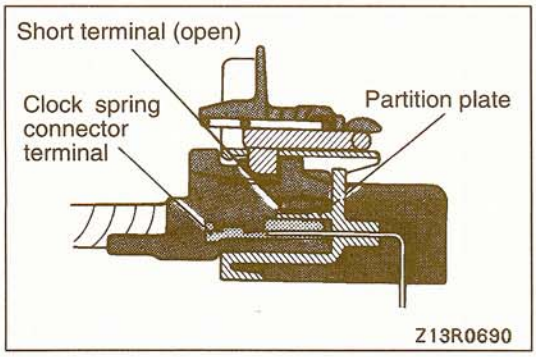


### When Connectors Are Fitted

When the SRS diagnosis unit and clock spring connectors are coupled, the circuit between the short terminals and clock spring connector terminals is kept in the OFF state by the partition plate provided in the connector of the SRS diagnosis unit.

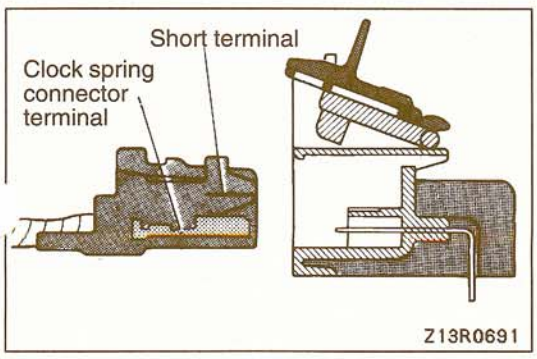


### When Connectors Are Disconnected

When the clock spring connectors are disconnected from the SRS diagnosis unit, the partition plate between the short terminals and clock spring connector terminals is removed. As a result, a short circuit is formed between the two poles of the clock spring connector terminals to prevent generation of a potential difference (current) between the squib terminals.

## CIRCUIT DIAGRAM

### CAUTION

1. **Do not repair, splice or modify SRS wiring (except for specific repairs to the body wiring harnes shown on page 52B-15; replace wiring if necessary, after reading and following all precaution and procedures in this manual.**
2. **Do not use an analog ohmmeter to check SRS wiring or components; use only special tools on page 52B-17 and digital multi-meter shown on page 52B-17.**

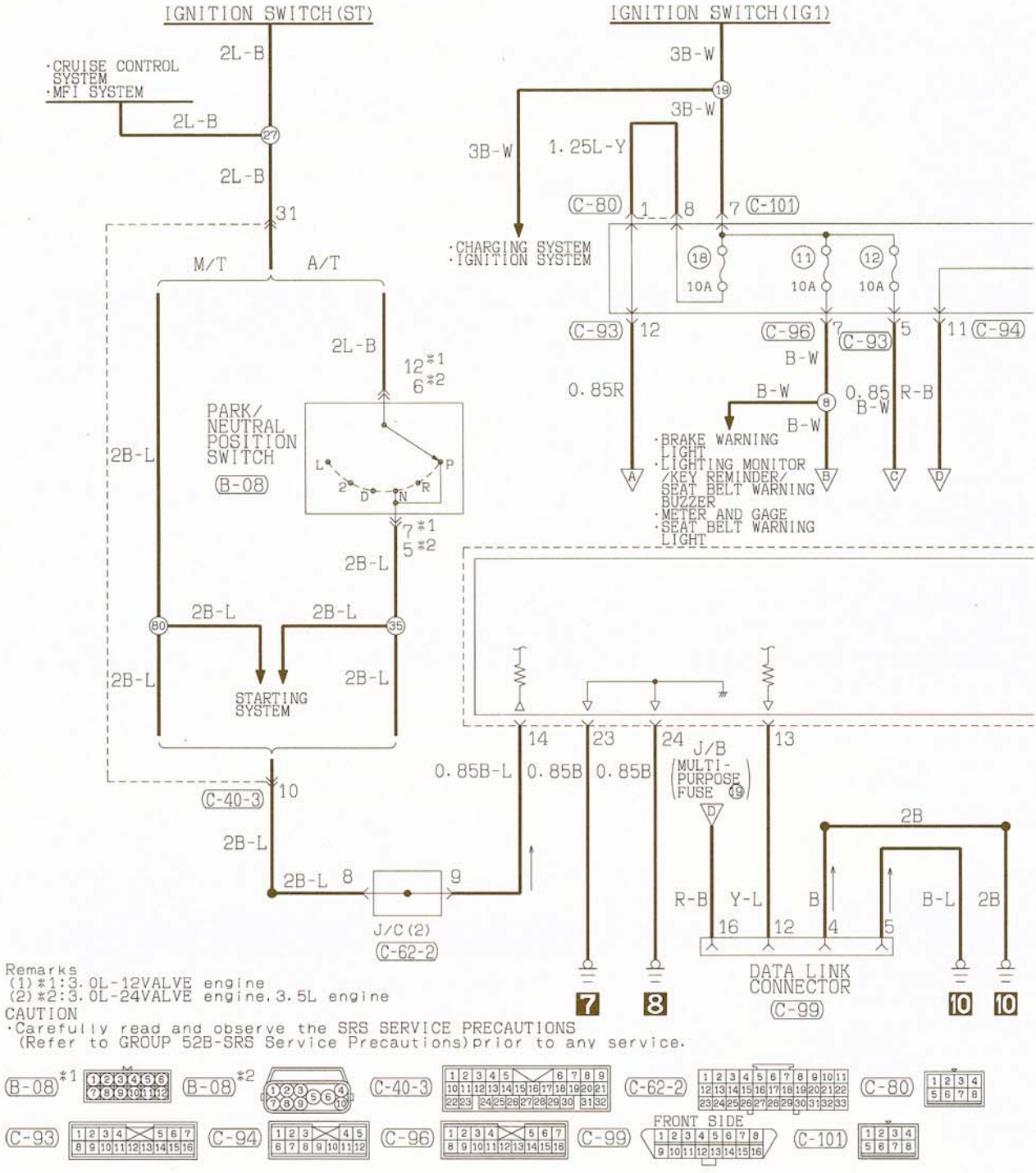


TSB Revision

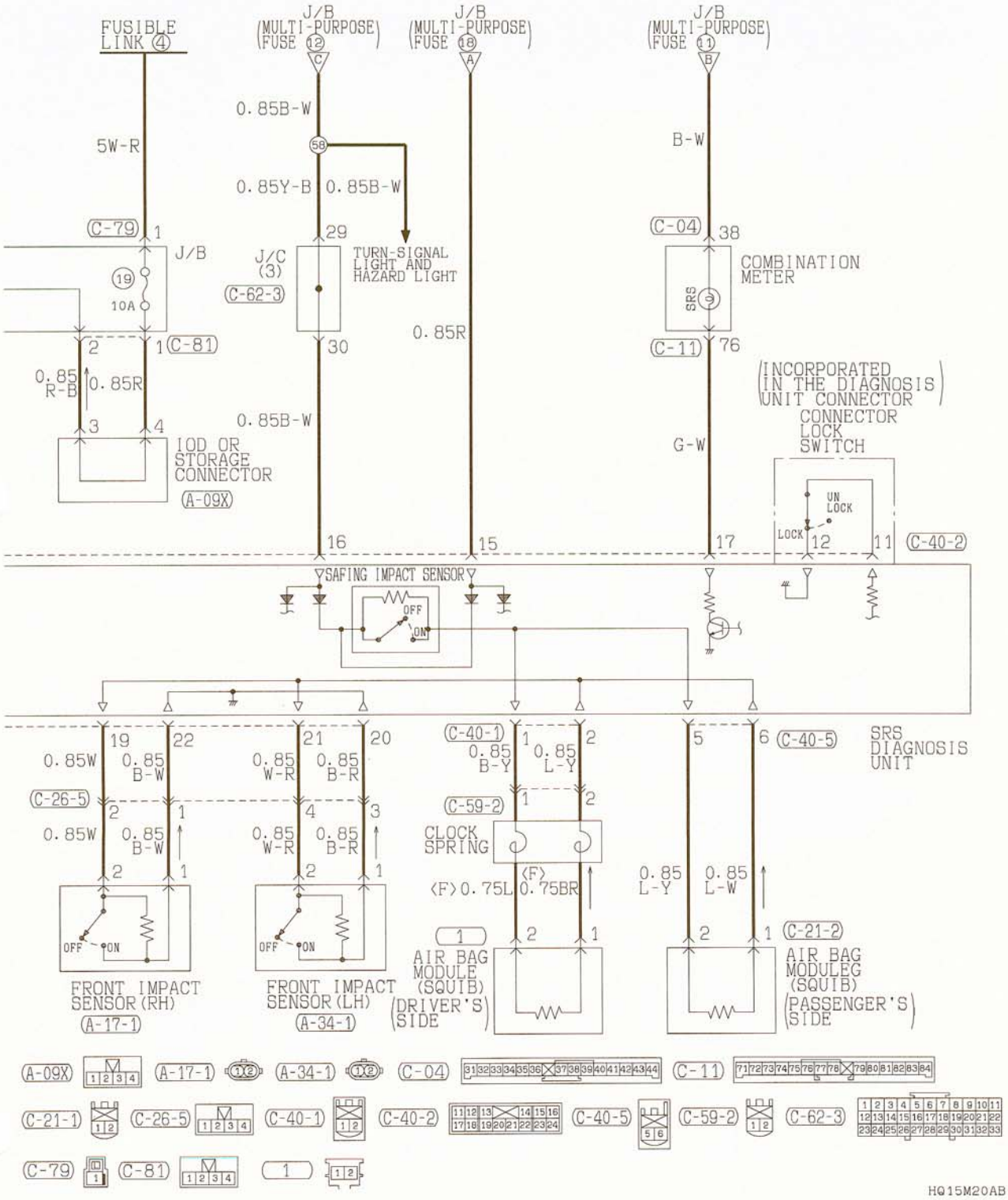


HQ15M20AB

**TSB Revision**

## COMPONENT LOCATION

| Name | Symbol | Name | Symbol |
|---|---|---|---|
| Data link connector | C | SRS diagnosis unit | B |
| Front impact sensor | A | – | – |

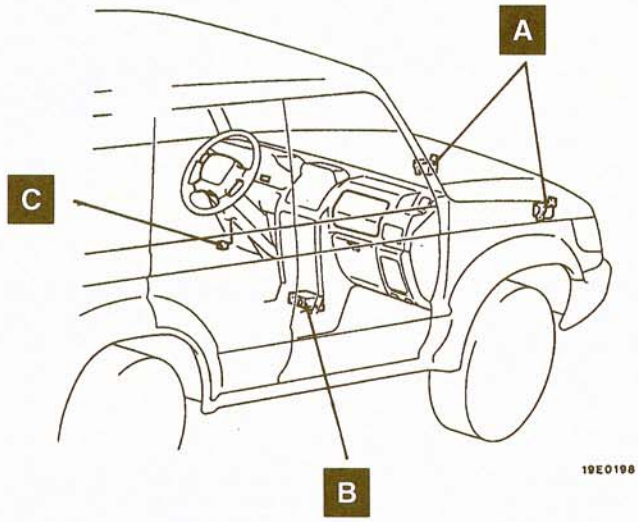


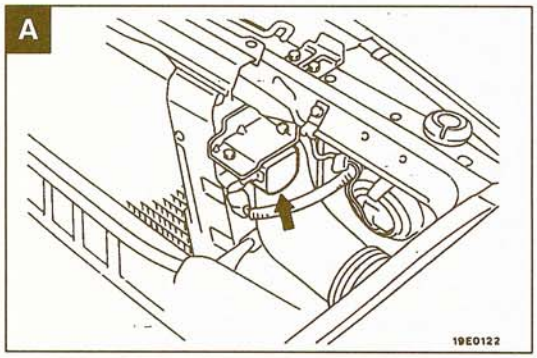


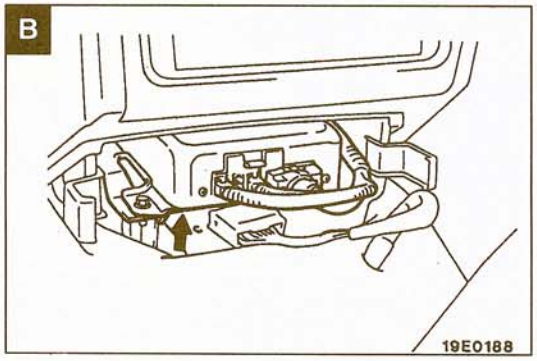


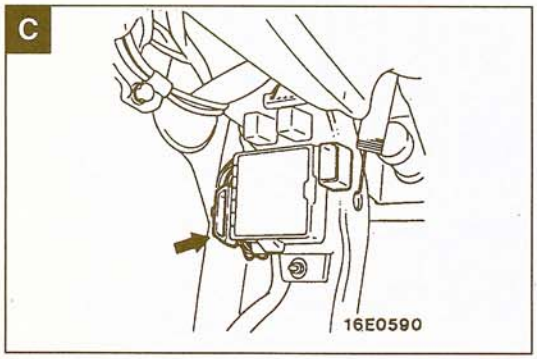


00004095

TSB Revision

# SERVICE PRECAUTIONS

52400030078

1. In order to avoid injury to yourself or others from accidental deployment of the air bag during servicing, read and carefully follow all the precautions and procedures described in this manual.
2. Do not use any electrical test equipment on or near SRS components, except those specified on P.52B-17.
   Never use an analog ohmmeter.
3. **Never Attempt to Repair the Following Components:**
   - Front Impact Sensors
   - SRS Diagnosis Unit (SDU)
   - Clock Spring
   - Air Bag Module

   If any of these components are diagnosed as faulty, they should only be replaced, in accordance with the COMPONENT SERVICE procedures in this manual.
4. Do not attempt to repair the wiring harness connectors of the SRS. If any of the connectors are diagnosed as faulty, replace the wiring harness. If the wires are diagnosed as faulty, replace or repair the wiring harness according to the following table.

| SDU Terminal No. | Harness Connector (No. of Terminals, Color) | Destination of Harness | Corrective Action |
|---|---|---|---|
| 1 | 2 pins, red | Dash wiring harness → Clock spring | Correct or replace each wiring harness Replace clock spring |
| 2 | | | |
| 3 and 4 | Unused terminals | – | – |
| 5 | 2 pins, green | Dash wiring harness → Front passenger's air bag module | Correct or replace each wiring harness |
| 6 | | | |
| 11 and 12 | 14 pins, red | – | – |
| 13 | 14 pins, red | Dash wiring harness → Diagnosis connector | Correct or replace each wiring harness |
| 14 | | Dash wiring harness → Control wiring harness → Dash wiring harness → Ignition switch (ST) | |
| 15 | | Dash wiring harness → Junction block (fuse No. 18) | |
| 16 | | Dash wiring harness → Junction block (fuse No. 12) | |
| 17 | | Dash wiring harness → Instrument panel wiring harness → SRS warning light | |
| 18 | | | |
| 20 | | Dash wiring harness → Front wiring harness → Front impact sensor (LH) | Correct or replace with sensor cable* |
| 21 | | | |
| 19 | | Dash wiring harness → Front wiring harness → Front impact sensor (RH) | |
| 22 | | | |
| 23 | | Dash wiring harness → Ground | Correct or replace dash wiring harness |
| 24 | | | |

NOTE
(1) The sensor cable marked with* is available as service part.
(2) The sensor cable used as a replacement part is routed along the front wiring harness and front wiring harness.

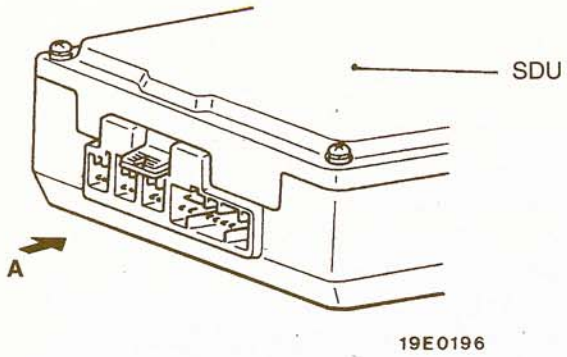


View A

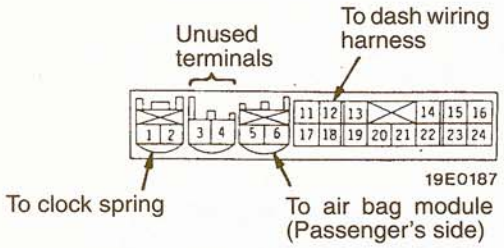


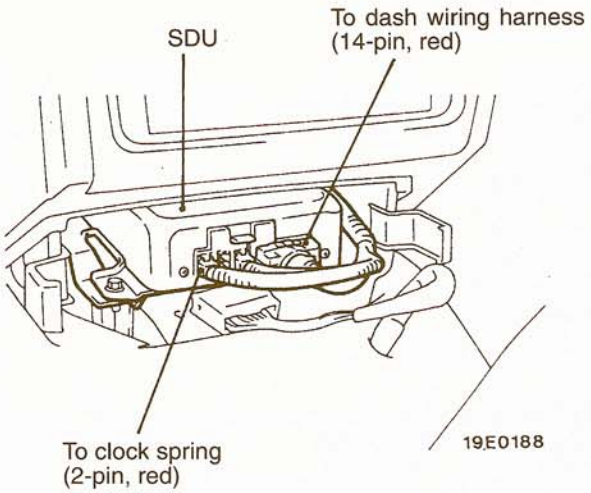


00004096

5. **After disconnecting the battery cable, wait 60 seconds or more before proceeding with the following work. The SRS system is designed to retain enough voltage to deploy the air bag for a short time even after the battery has been disconnected, so serious injury may result from unintended air bag deployment if work is done on the SRS system immediately afte the battery cables are disconnected.**
6. SRS components should not be subjected to heat over 93°C (200°F), so remove the front impact sensors, SRS diagnosis unit, air bag module and clock spring before drying or baking the vehicle after painting.
7. Whenever you finish servicing the SRS, check the SRS warning light operation to make sure that the system functions properly. (Refer to P.52B-2.)
8. Make certain that the ignition switch is OFF when the scan tool is connected or disconnected.
9. If you have any questions about the SRS, please contact your local distributor.

NOTE
SERIOUS INJURY CAN RESULT FROM UNINTENDED AIR BAG DEPLOYMENT, SO USE ONLY THE PROCEDURES AND EQUIPMENT SPECIFIED IN THIS MANUAL.

## SERVICE SPECIFICATIONS

52400040040

| Items | Standard value |
|---|---|
| Front impact sensor resistance Ω | 2,000 ± 20 |
| Clock spring resistance Ω | less than 0.4 |

**TSB Revision**

# SPECIAL TOOLS

52400070063

| Tool | Tool number and name | Supersession | Application |
|---|---|---|---|
| 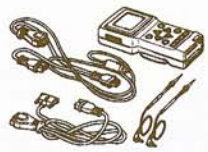 | MB991502<br>Scan tool<br>(MUT-II) | MB991502 | • Reading diagnostic trouble codes<br>• Erasing diagnostic trouble codes<br>• Reading trouble period<br>• Reading erase times<br>[Refer to MUT-II OPERATING INSTRUCTIONS] |
|  | ROM pack | – | |
| 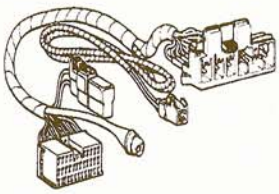 | MB991530<br>SRS Check Harness | – | • Checking the SRS electrical circuitry with a digital multi-meter<br>NOTE<br>SRS check harness is used on various Diagnostic Tests. |
|  | MB990803<br>Steering wheel puller | General service tool | Removal of steering wheel |
| 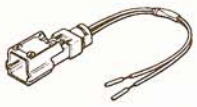 <br>13R0732 | MB686560<br>SRS AIR BAG ADAPTER HARNESS A | General service tool | Deployment of air bag module inside the vehicle |
| 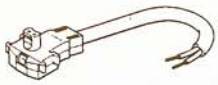 <br>13R0751 | MB628919<br>SRS AIR BAG ADAPTER HARNESS B | General service tool | Deployment of air bag module outside the vehicle |

# TEST EQUIPMENT

52400080042

| Tool | Name | Use |
|---|---|---|
|  <br>Z13R0746 | Digital multi-meter<br><br>Use a multi-meter for which the maximum test current is 2 mA or less at the minimum range of resistance measurement | Checking the SRS electrical circuitry with SRS Check Harness |

# TROUBLESHOOTING

52400310059

## DIAGNOSTIC TROUBLESHOOTING FLOW

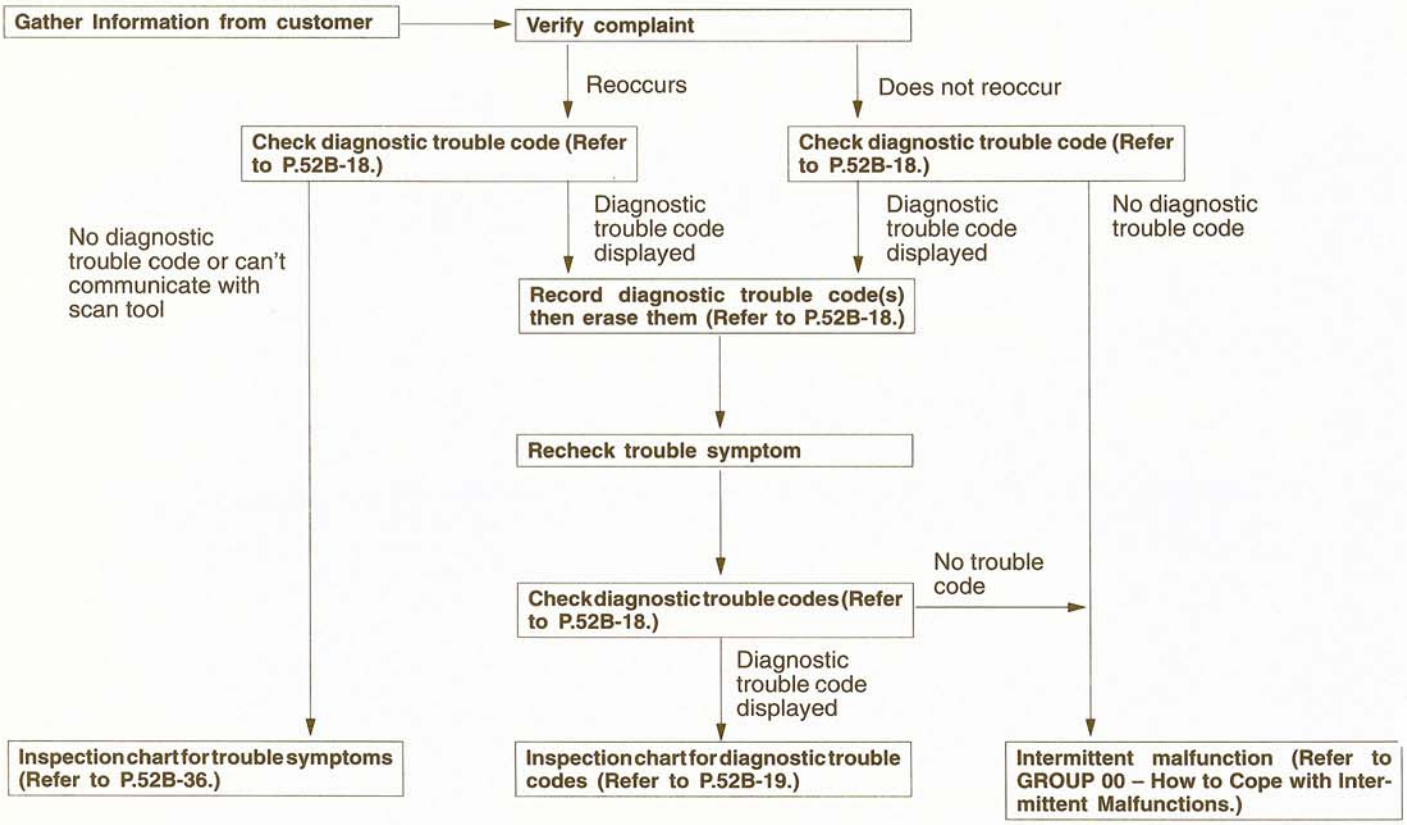


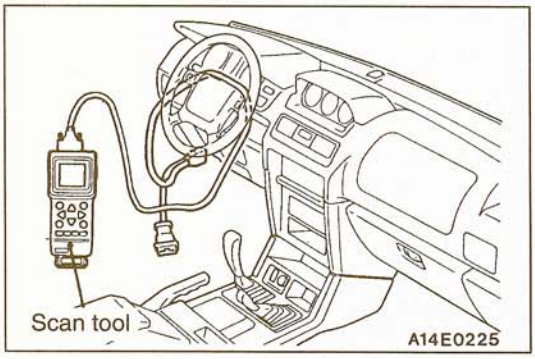


## DIAGNOSTIC FUNCTION

52400320045

### DIAGNOSTIC TROUBLE CODES CHECK

Connect the scan tool to the data link connector then check diagnostic trouble codes.

**Caution**
**Turn the ignition switch off before connecting or disconnecting the scan tool.**

### ERASING DIAGNOSTIC TROUBLE CODES

Connect the scan tool to the data link connector then erase the diagnostic trouble codes.

## INSPECTION CHART FOR DIAGNOSTIC TROUBLE CODES

52400330048

Inspect according to the inspection chart that is appropriate for the malfunction code.

| Code No. | Diagnostic item | | Reference page |
|---|---|---|---|
| 11 | Front impact sensor system | | 52B-20 |
| 12 | | | |
| 13 | | | |
| 21 | Driver's air bag module (squib) system | | 52B-22 |
| 22 | | | |
| 24 | Front passenger's air bag module (squib) system | | 52B-24 |
| 25 | | | |
| 31 | SDU system | | 52B-25 |
| 32 | | | |
| 33*1 | Cranking signal system | | 52B-26 |
| 34*1 | Connector lock system | | 52B-27 |
| 41*1,*2 | $IG_1$ (A) power circuit system | | 52B-28 |
| 42*1,*2 | $IG_1$ (B) power circuit system | | 52B-29 |
| 43 | SRS warning light drive circuit system | Light does not illuminate *1 | 52B-31 |
| | | Light does not switch off | 52B-33 |
| 44 | SDU warning light drive circuit system | | 52B-34 |
| 45 | SDU non-volatile memory (EEPROM) and A/D converter system | | 52B-35 |

NOTE

1. *1: For diagnostic trouble codes marked with *, if the vehicle condition returns to normal for a continuous period of 5 ± 0.2 seconds, the diagnostic trouble code will be automatically erased, and the SRS warning light will return to normal.
2. *2: If the vehicle has a discharged battery it will store the fault codes 41 or 42. When these diagnostic trouble codes are displayed, check the battery.

## INSPECTION PROCEDURE CLASSIFIED BY DIAGNOSTIC TROUBLE

| Code No.11, 12 or 13 Front impact sensor system | Probable cause |
|---|---|
| [Comment]<br>(1) These diagnostic trouble codes are output if there is abnormal resistance between the input terminals of the SDU front impact sensor.<br>Refer to table 1 for the conditions for output of each diagnostic trouble code.<br>(2) Diagnostic trouble codes 11, 12 and 13 are sometimes generator in combination with diagnostic trouble codes relating to the air bag module (squib)(code Nos. 21, 22), but sometimes only one may be output instead of both being memorized. Because of this, the air bag module should also be inspected at the same time. Refer to table 2 for the relationships between these codes. | • Malfunction of front impact sensor<br>• Malfunction of harnesses or connectors<br>• Malfunction of SDU |

### TABLE 1: CONDITIONS FOR OUTPUT OF EACH DIAGNOSTIC TROUBLE CODE

| Code No. | Trouble Symptom |
|---|---|
| 11 | • Short in front impact sensor or harness short<br>• Short in front impact sensor or air bag module (squib) harnesses leading to the vehicle body ground<br>• Short in front impact sensor or air bag module (squib) harnesses leading to the power supply |
| 12 | • Open circuit in either left or right front impact sensor or open harness<br>• Short in front impact sensor or air bag module (squib) harnesses leading to the power supply |
| 13 | • Open circuit in both left and light front impact sensors or open harness<br>• Short in front impact sensor or air bag module (squib) harnesses leading to the power supply |

### TABLE 2: FAILURE MODE COMBINATIONS

| Failure modes | | Front impact sensor short | Front impact sensor open circuit (1 sensor) | Front impact sensor open circuit (2 sensors) |
|---|---|---|---|---|
| Driver's air bag module (squib) | Short | 11 or 21 | 12 or 21 | 13 or 21 |
| | Open circuit | 11 or 22 | 12 or 22 | 13 or 22 |
| Front passenger's air bag module (squib) | Short | 11 or 24 | 12 or 24 | 13 or 24 |
| | Open circuit | 11 or 25 | 12 or 25 | 13 or 25 |

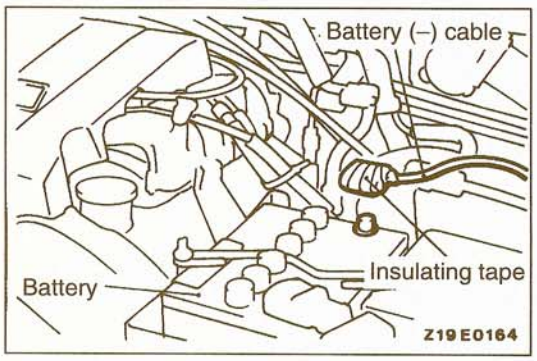


1. Turn the ignition key to the "LOCK" position, disconnect the negative battery cable and tape the terminal.

   **Caution**
   **Wait at least 60 seconds after disconnecting the battery cable before doing any further work. (Refer to P.52B-16.)**

2. Remove the floor console assembly. (Refer to GROUP 52A – Floor Console.)

**TSB Revision**

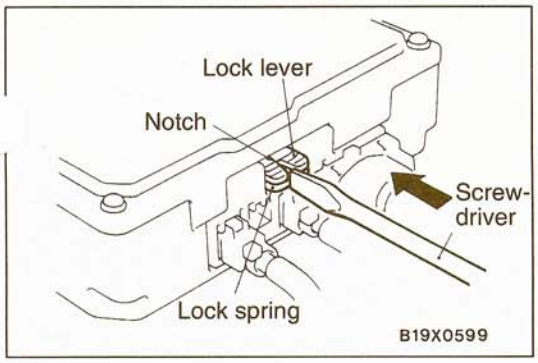


3. Place a flat-tipped (–) screwdriver against the lock spring at the lock lever notch and push the spring toward the unit.

**Caution**
**Do not use excessive force to raise the lock lever (green).**

4. Disconnect the red 14-pin connector from the SDU.

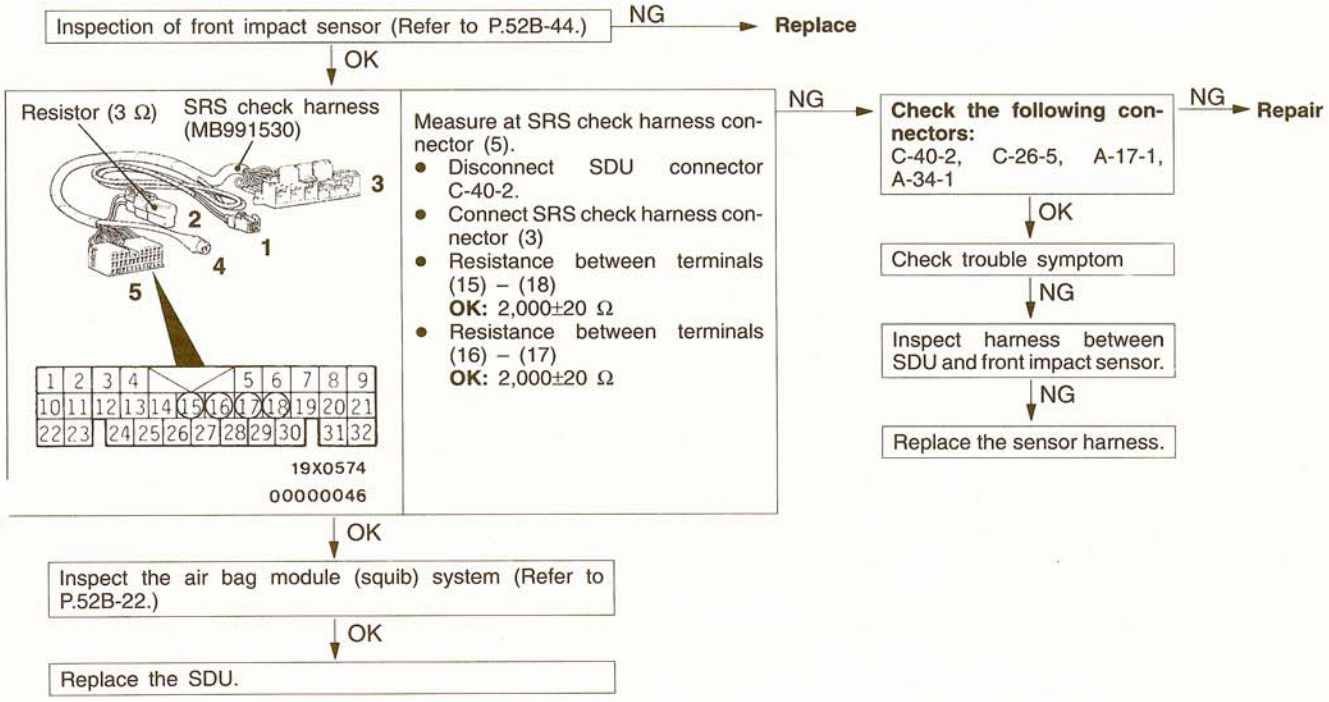

| Code No.21 or 22 Driver's air bag module (squib) system | Probable cause |
|---|---|
| [Comment]<br>(1) These diagnostic trouble codes are output if there is abnormal resistance between the input terminals of the driver's air bag module (squib). Refer to table 1 for the conditions for output of each diagnostic trouble code.<br>(2) Diagnostic trouble codes 21 and 22 are sometimes generated in combination with diagnostic trouble codes relating to the front impact sensor (code Nos. 11, 12 and 13), but sometimes only one may be output instead of both being memorized. Because of this, the front impact sensor should also be inspected at the same time. Refer to table 2 for the relationships between these codes. | • Malfunction of clock spring<br>• Malfunction of harnesses or connectors<br>• Malfunction of air bag module (squib)<br>• Malfunction of SDU |

## TABLE 1: CONDITIONS FOR OUTPUT OF EACH DIAGNOSTIC TROUBLE CODE

| Code No. | Trouble Symptom |
|---|---|
| 21 | • Short in driver's air bag module (squib) or harness short<br>• Short in clock spring<br>• Short in driver's air bag module (squib) or front impact sensor harnesses leading to the power supply |
| 22 | • Open circuit in driver's air bag module (squib) or open harness<br>• Open circuit in clock spring<br>• Malfunction of connector contact<br>• Short in driver's air bag module (squib) or front impact sensor harnesses leading to the power supply |

## TABLE 2: FAILURE MODE COMBINATIONS

| Failure modes | | Front impact sensor short | Front impact sensor open circuit (1 sensor) | Front impact sensor open circuit (2 sensors) |
|---|---|---|---|---|
| Driver's air bag module (squib) | Short | 11 or 21 | 12 or 21 | 13 or 21 |
| | Open circuit | 11 or 22 | 12 or 22 | 13 or 22 |

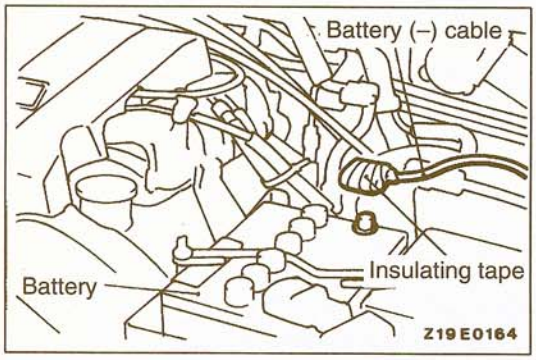


1. Turn the ignition key to the "LOCK" position, disconnect the negative battery cable and tape the terminal.

   **Caution**
   **Wait at least 60 seconds after disconnecting the battery cable before doing any further work. (Refer to P.52B-16.)**

2. Remove the floor console assembly. (Refer to GROUP 52A – Floor Console.)

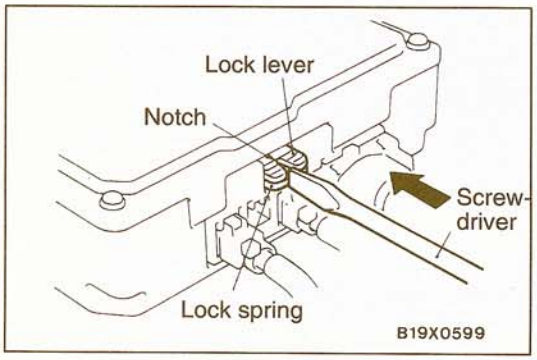


3. Place a flat-tipped (–) screwdriver against the lock spring at the lock lever notch and push the spring toward the unit.

   **Caution**
   **Do not use excessive force to raise the lock lever (green).**

4. Disconnect the red 14-pin connector from the SDU.

**TSB Revision** 97-52B-002

Inspect clock spring (Refer to P.52B-52.) — NG → **Replace**

OK ↓

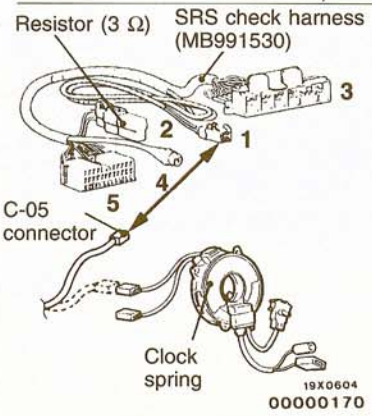


**SCAN TOOL DIAGNOSTIC TROUBLE CODE**

- Connect clock spring connector C-59-2.
- Connect SRS check harness connector (1)
- Erase diagnostic trouble code memory

Are code Nos. 21 and 22 output?

NG → **Check the following connectors:** C-40-1 and C-59-2 — NG → **Repair**

OK ↓

Check trouble symptom

NG ↓

Replace the air bag module (squib).

Yes ↓

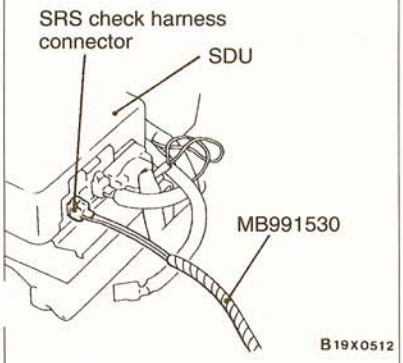


**SCAN TOOL DIAGNOSTIC TROUBLE CODE**

- Connect clock spring connector C-59-2.
- Disconnect SDU connector C-40-1.
- Connect SRS check harness connector (1)
- Erase diagnostic trouble code memory

Are code Nos. 21 and 22 output?

No → Check the harness between the SDU and clock spring, and repair if necessary.

Yes ↓

Inspect the front impact sensor system (Refer to P.52B-20.)

OK ↓

Replace the SDU.

| Code No. 24 or 25 Front passenger's air bag module (squib) system | Probable cause |
|---|---|
| [Comment]<br>(1) These diagnostic trouble codes are output if there is abnormal resistance between the input terminals of the front passenger's air bag module (squib). Refer to table 1 for the conditions for output of each diagnostic trouble code.<br>(2) Diagnostic trouble codes 24 and 25 are sometimes generated in combination with diagnostic trouble codes relating to the front impact sensor (code Nos. 11, 12 and 13), but sometimes only one may be output instead of both being memorized. Because of this, the front impact sensor should also be inspected at the same time. Refer to table 2 for the relationships between these codes. | • Malfunction of harnesses or connectors<br>• Malfunction of front passenger's air bag module (squib)<br>• Malfunction of SDU |

## TABLE 1: CONDITIONS FOR OUTPUT OF EACH DIAGNOSTIC TROUBLE CODE

| Code No. | Trouble Symptom |
|---|---|
| 24 | • Short in front passenger's air bag module (squib) or harness short<br>• Short in front passenger's air bag module (squib) or front impact sensor harnesses leading to the power supply |
| 25 | • Open circuit in front passenger's air bag module (squib) or open harness<br>• Malfunction of connector contact<br>• Short in front passenger's air bag module (squib) or front impact sensor harnesses leading to the power supply |

## TABLE 2: FAILURE MODE COMBINATIONS

| Failure modes | | Front impact sensor short | Front impact sensor open circuit (1 sensor) | Front impact sensor open circuit (2 sensors) |
|---|---|---|---|---|
| Front passenger's air bag module (squib) | Short | 11 or 24 | 12 or 24 | 13 or 24 |
| | Open circuit | 11 or 25 | 12 or 25 | 13 or 25 |

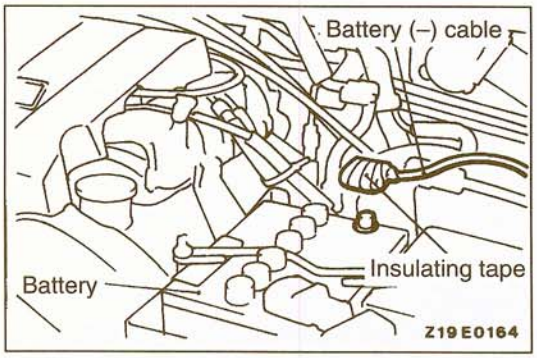


1. Turn the ignition key to the "LOCK" position, disconnect the negative battery cable and tape the terminal.

   **Caution**
   **Wait at least 60 seconds after disconnecting the battery cable before doing any further work. (Refer to P.52B-16.)**

2. Remove the floor console assembly. (Refer to GROUP 52A – Floor Console.)

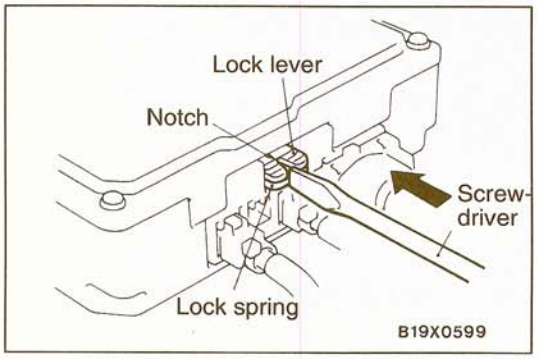


3. Place a flat-tipped (–) screwdriver against the lock spring at the lock lever notch and push the spring toward the unit.

   **Caution**
   **Do not use excessive force to raise the lock lever (green).**

4. Disconnect the red 14-pin connector from the SDU.

**TSB Revision**

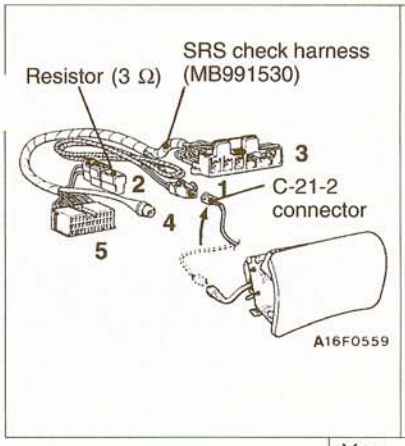


**SCAN TOOL DIAGNOSTIC TROUBLE CODE**
- Disconnect front passenger's air bag module connector C-21-2
- Connect SRS check harness connector (1)
- Erase diagnostic trouble code memory

Are code Nos. 24 and 25 output?

NG → **Check the following connectors:** C-21-2 and C-40-5 → NG → **Repair**

OK → Check trouble symptom → NG → Replace the front passenger's air bag module (squib).

Yes → Inspect harness between SDU and front passenger's air bag module → NG → **Repair**

Yes → Inspect the front impact sensor system (Refer to P.52B-20.)

OK → Replace the SDU.

| Code No. 31 or 32 SDU system | Probable cause |
|---|---|
| [Comment]<br>These diagnostic trouble codes are output if the voltage at the SDU capacitor terminals is higher (No. 31) or lower (No. 32) than the specified value for 5 seconds or more. However, if diagnostic trouble code Nos. 41 and 42 are being output due to a drop in battery voltage, code No. 32 will not be detected. | • Malfunction of front impact sensor<br>• Malfunction of SDU |

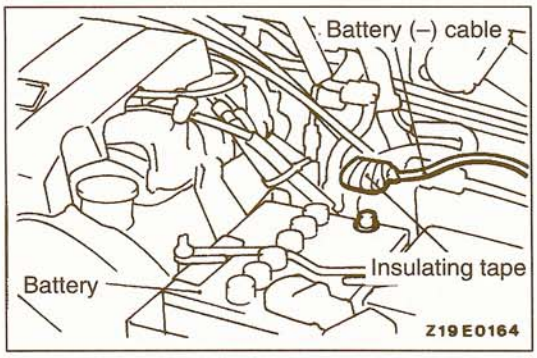


1. Turn the ignition key to the "LOCK" position, disconnect the negative battery cable and tape the terminal.

   **Caution**
   **Wait at least 60 seconds after disconnecting the battery cable before doing any further work. (Refer to P.52B-16.)**

2. Remove the floor console assembly. (Refer to GROUP 52A – Floor Console.)

**TSB Revision**

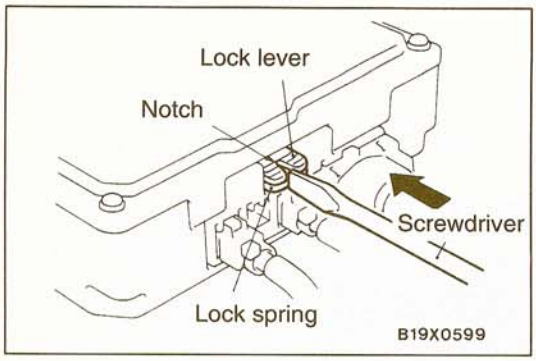


3. Place a flat-tipped (–) screwdriver against the lock spring at the lock lever notch and push the spring toward the unit.

   **Caution**
   **Do not use excessive force to raise the lock lever (green).**

4. Disconnect the red 14-pin connector from the SDU.
   The capacitor inside the SDU is probably defective, so replace the SDU.
   However, code No. 32 could also be a result of a short in the front impact sensor, so inspection of the front impact sensor system should also be carried out. (Refer to P.52B-20.)

| Code No. 33 Cranking signal system | Probable cause |
|---|---|
| [Comment]<br>The cranking signal is provided in order to prevent mistaken detection of power supply voltage drops at the IG1 terminal during cranking. This diagnostic trouble code is output if the cranking signal is output for a continuous period of 45 seconds or more (cranking signal harness is shorted to the power supply).<br>However, if the vehicle condition returns to normal for a continuous period of 5 ± 0.2 seconds (except when cranking), diagnostic trouble code No. 33 will be automatically erased, and the SRS warning light will switch off. | • Malfunction of harnesses or connectors<br>• Malfunction of SDU |

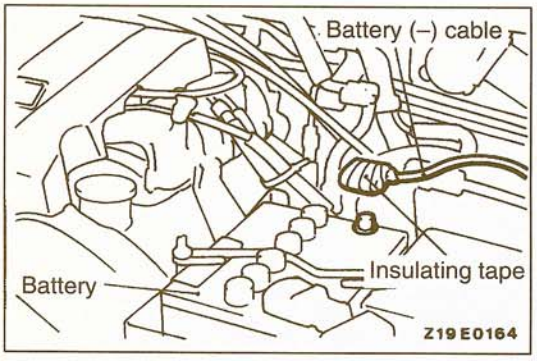


1. Turn the ignition key to the "LOCK" position, disconnect the negative battery cable and tape the terminal.

   **Caution**
   **Wait at least 60 seconds after disconnecting the battery cable before doing any further work. (Refer to P.52B-16.)**

2. Remove the floor console assembly. (Refer to GROUP 52A – Floor Console.)

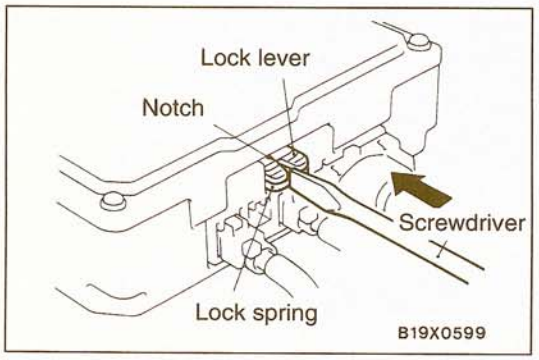


3. Place a flat-tipped (–) screwdriver against the lock spring at the lock lever notch and push the spring toward the unit.

   **Caution**
   **Do not use excessive force to raise the lock lever (green).**

4. Disconnect the red 14-pin connector from the SDU.

**TSB Revision**

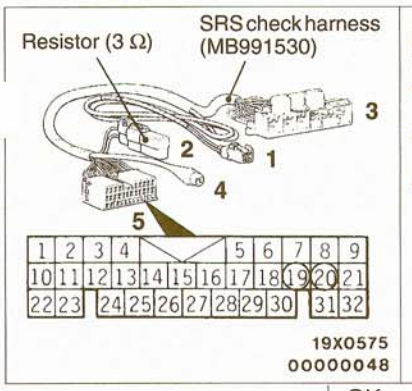


Measure at SRS check harness connector (5).
- Disconnect SDU connector C-40-2.
- Connect SRS check harness connector (3)
- Continuity between terminals (19) – (20)

**OK:** Continuity

NG → **Check the following connectors:**
- C-40-2

NG → **Repair**

OK → Check trouble symptoms

NG → Check the harness wire between each, SDU and ground, and repair if necessary.

OK ↓

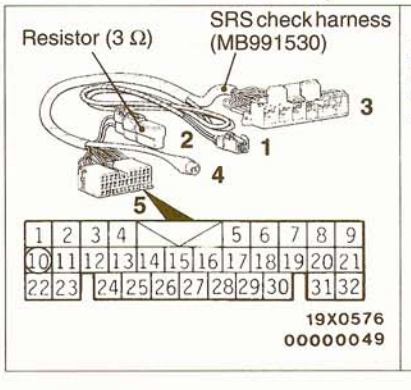


Measure at SRS check harness connector (5).
- Ignition switch ON
- Voltage between terminal (10) and ground

**OK:** 0 V

NG → Check the harness between the SDU and ignition switch (ST), and repair if necessary.

OK → Replace the SDU

| Code No. 34 Connector lock system | Probable cause |
|---|---|
| [Comment]<br>This diagnostic trouble code is output if the double lock shorting bar of the SDU connector is detected to be open.<br>However, if the vehicle condition returns to normal for a continuous period of 5 ± 0.2 seconds, diagnostic trouble code No. 34 will be automatically erased, and the SRS warning light will switch off. | • Malfunction of connectors<br>• Malfunction of SDU |

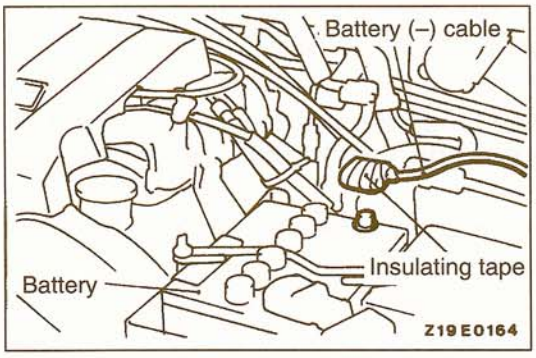


1. Turn the ignition key to the "LOCK" position, disconnect the negative battery cable and tape the terminal.

   **Caution**
   **Wait at least 60 seconds after disconnecting the battery cable before doing any further work.**
   **(Refer to P.52B-16.)**

2. Remove the floor console assembly. (Refer to GROUP 52A – Floor Console.)

**TSB Revision**

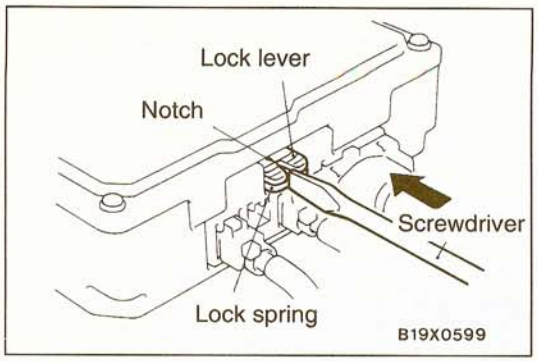


3. Place a flat-tipped (–) screwdriver against the lock spring at the lock lever notch and push the spring toward the unit.

**Caution**
**Do not use excessive force to raise the lock lever (green).**

4. Disconnect the red 14-pin connector from the SDU.

Is the SDU engagement detection mechanism operating correctly?
No. → Insert the connector securely and lower the lock lever to lock the connector.
Yes ↓
Replace the SDU

| Code No. 41 $IG_1$ (A) power circuit system | Probable cause |
|---|---|
| [Comment]<br>This diagnostic trouble code is output if the voltage between the $IG_1$ (A) terminal and the ground is lower than the specified value for a continuous period of 5 seconds or more.<br>However, if the vehicle condition returns to normal for a continuous period of 5 ± 0.2 seconds, diagnostic trouble code No. 41 will be automatically erased, and the SRS warning light will switch off. | • Malfunction of harnesses or connectors<br>• Malfunction of SDU |

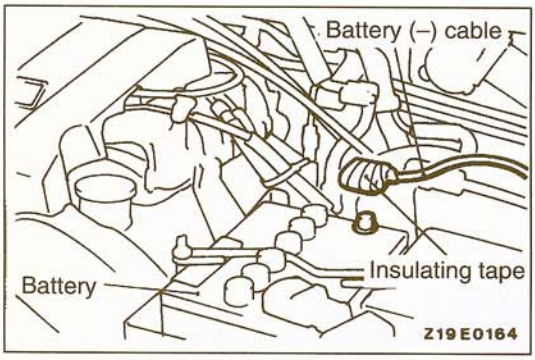


1. Turn the ignition key to the "LOCK" position, disconnect the negative battery cable and tape the terminal.

**Caution**
**Wait at least 60 seconds after disconnecting the battery cable before doing any further work. (Refer to P.52B-16.)**

2. Remove the floor console assembly. (Refer to GROUP 52A – Floor Console.)

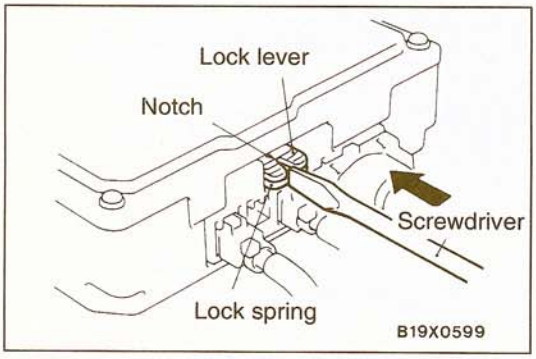


3. Place a flat-tipped (–) screwdriver against the lock spring at the lock lever notch and push the spring toward the unit.

**Caution**
**Do not use excessive force to raise the lock lever (green).**

4. Disconnect the red 14-pin connector from the SDU.

**TSB Revision**

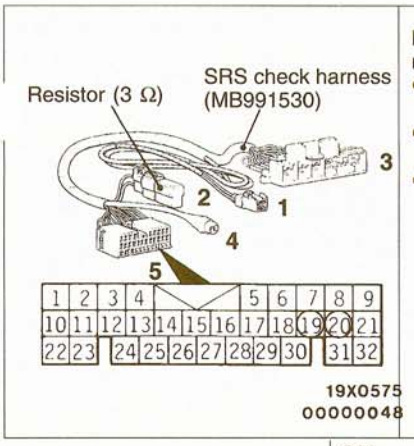


Measure at SRS check harness connector (5).
- Disconnect SDU connector C-40-2.
- Connect SRS check harness connector (3)
- Continuity between terminals (19) – (20)

**OK:** Continuity

NG → **Check the following connector:** C-40-2 → NG → **Repair**

OK → Check trouble symptom

NG → Check the harness between the SDU and ground, and repair if necessary.

OK ↓

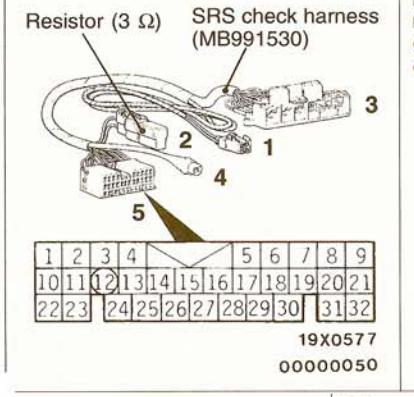


Measure at SRS check harness connector (5).
- Ignition switch ON
- Voltage between terminal (12) and ground

**OK:** 9 V or more

NG → **Check the following connectors:** C-62-3, C-93 and C-101 → NG → **Repair**

OK → Check trouble symptom

NG → Check the harness between the SDU and ignition switch $IG_1$ (A), and repair if necessary.

OK ↓

Replace the SDU.

| Code No. 42 $IG_1$ (B) power circuit system | Probable cause |
|---|---|
| [Comment]<br>This diagnostic trouble code is output if the voltage between the $IG_1$ (B) terminal and the ground is lower than the specified value for a continuous period of 5 seconds or more.<br>However, if the vehicle condition returns to normal for a continuous period of 5 ± 0.2 seconds, diagnostic trouble code No. 41 will be automatically erased, and the SRS warning light will switch off. | • Malfunction of harnesses or connectors |

**TSB Revision**

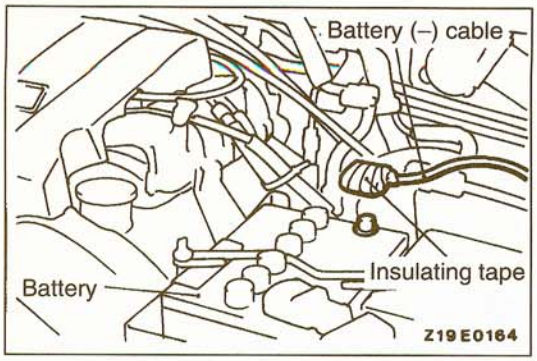


1. Turn the ignition key to the "LOCK" position, disconnect the negative battery cable and tape the terminal.

   **Caution**
   **Wait at least 60 seconds after disconnecting the battery cable before doing any further work. (Refer to P.52B-16.)**

2. Remove the floor console assembly. (Refer to GROUP 52A – Floor Console.)

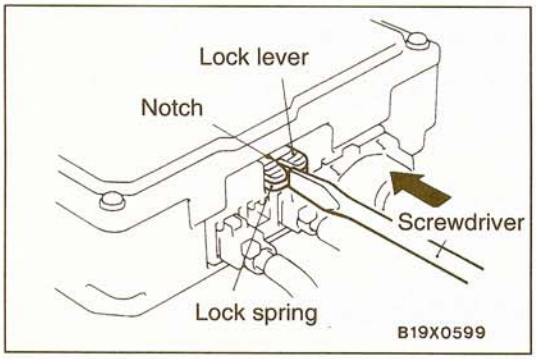


3. Place a flat-tipped (–) screwdriver against the lock spring at the lock lever notch and push the spring toward the unit.

   **Caution**
   **Do not use excessive force to raise the lock lever (green).**

4. Disconnect the red 14-pin connector from the SDU.

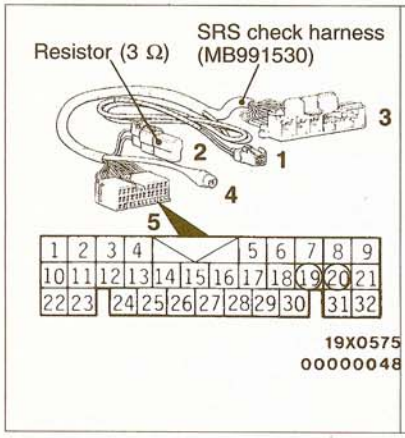


Measure at SRS check harness connector (5).
- Disconnect SDU connector C-40-2.
- Connect SRS check harness connector (3)
- Continuity between terminals (19) – (20)

**OK:** Continuity

NG → **Check the following connector:** C-40-2 → NG → **Repair**

OK → Check trouble symptom → NG → Check the harness between the SDU and ground, and repair if necessary.

OK ↓

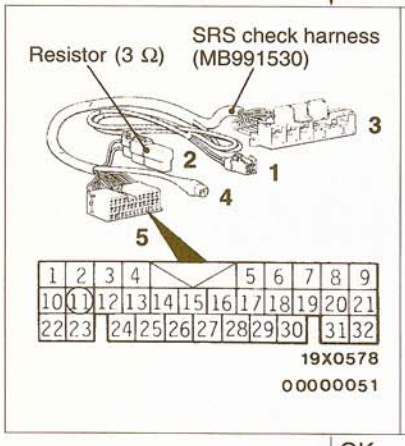


Measure at SRS check harness connector (5).
- Ignition switch: ON
- Voltage between the terminal (11) and ground.

**OK:** 9 V or more

NG → **Check the following connectors:** C-80, C-93 and C-101 → NG → **Repair**

OK → Check trouble symptom → NG → Check the harness between the SDU and ignition switch $IG_1$ (B), and repair if necessary.

OK ↓

Replace the SDU.

**TSB Revision**

| Code No. 43 SRS warning light drive circuit system (Light does not illuminate.) | Probable cause |
|---|---|
| [Comment]<br>This diagnostic trouble code is output when an open circuit occurs for a continuous period of 5 seconds while the SDU is monitoring the SRS warning light and the light is OFF (transistor OFF).<br>However, if this code is output due to an open circuit, if the vehicle condition returns to normal for a continuous period of 5 ± 0.2 seconds, this diagnostic trouble code will be automatically erased, and the SRS warning light will return to normal. | • Malfunction of harnesses or connectors<br>• Blown bulb<br>• Malfunction of SDU<br>• Malfunction of combination meter |

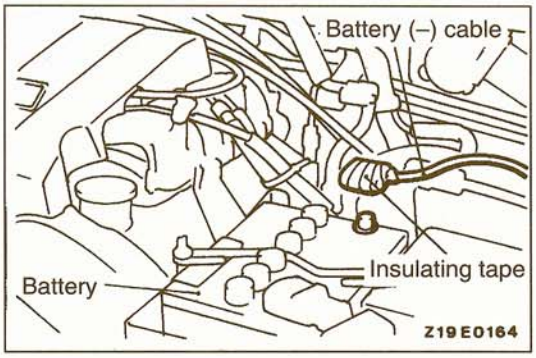


1. Turn the ignition key to the "LOCK" position, disconnect the negative battery cable and tape the terminal.

   **Caution**
   **Wait at least 60 seconds after disconnecting the battery cable before doing any further work. (Refer to P.52B-16.)**

2. Remove the floor console assembly. (Refer to GROUP 52A – Floor Console.)

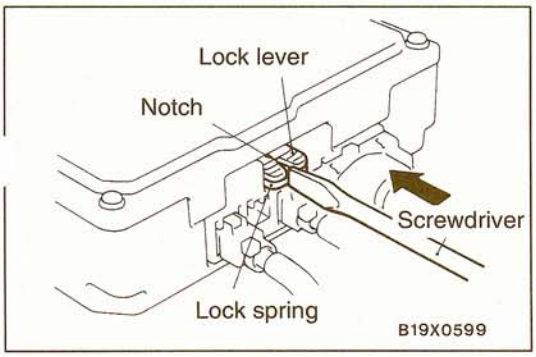


3. Place a flat-tipped (–) screwdriver against the lock spring at the lock lever notch and push the spring toward the unit.

   **Caution**
   **Do not use excessive force to raise the lock lever (green).**

4. Disconnect the red 14-pin connector from the SDU.

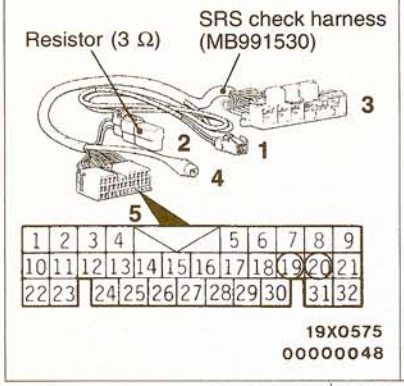


Measure at SRS check harness connector (5).
- Disconnect SDU connector C-40-2.
- Connect SRS check harness connector (3)
- Continuity between terminals (19) – (20)
  **OK:** Continuity

NG → **Check the following connector:** C-40-2 → NG → **Repair**

OK → Check trouble symptom

NG → Check the harness between the SDU and ground, and repair if necessary.

OK

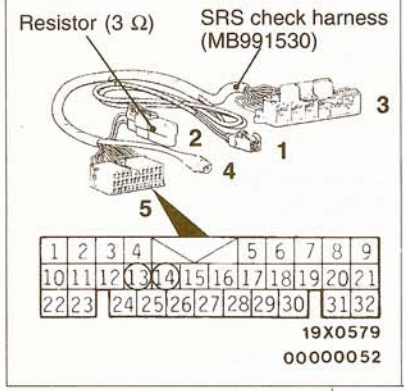


Measure at SRS check harness connector (5).
- Ignition switch ON
- Connect terminal (13) to the body ground
  **OK:** Light illuminates
- Connect terminal (14) to the body ground
  **OK:** Light illuminates

NG → Blown bulb inspection → NG → **Repair**

OK → **Check the following connectors:** C-4, C-11, C-96 and C-101 → NG → **Repair**

OK → Check trouble symptom

NG → Check the harness between the SDU and ignition switch ($IG_1$), and repair if necessary. → NG → **Repair**

OK → Replace the combination meter.

OK → Replace the SDU.

**TSB Revision**

| Code No. 43 SRS warning light drive circuit system (Light does not switch off.) | Probable cause |
|---|---|
| [Comment]<br>This diagnostic trouble code is output when a short to ground occurs in the harness between the light and the SDU while the SDU is monitoring the SRS warning light and the light is ON. | • Malfunction of harnesses or connectors<br>• Malfunction of SDU |

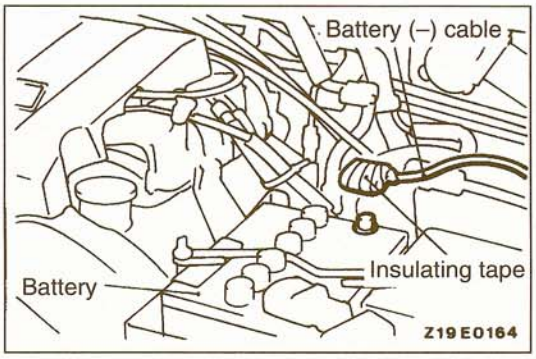


1. Turn the ignition key to the "LOCK" position, disconnect the negative battery cable and tape the terminal.

   **Caution**
   **Wait at least 60 seconds after disconnecting the battery cable before doing any further work. (Refer to P.52B-16.)**

2. Remove the floor console assembly. (Refer to GROUP 52A – Floor Console.)

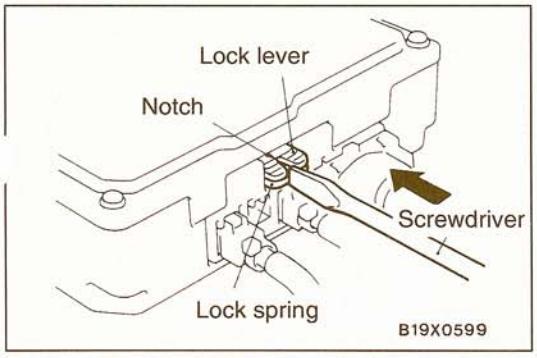


3. Place a flat-tipped (–) screwdriver against the lock spring at the lock lever notch and push the spring toward the unit.

   **Caution**
   **Do not use excessive force to raise the lock lever (green).**

4. Disconnect the red 14-pin connector from the SDU.

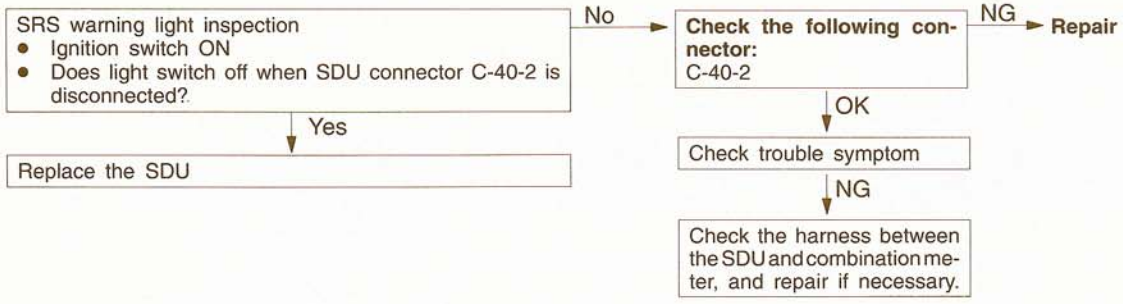


**TSB Revision**

| Code No. 44 SRS warning light drive circuit system | Probable cause |
|---|---|
| [Comment]<br>This diagnostic trouble code is output when a short occurs in the light drive circuit or a malfunction of the output transistor inside the SDU is detected while the SDU is monitoring the SRS warning light drive circuit. | • Malfunction of harnesses or connectors<br>• Malfunction of SDU |

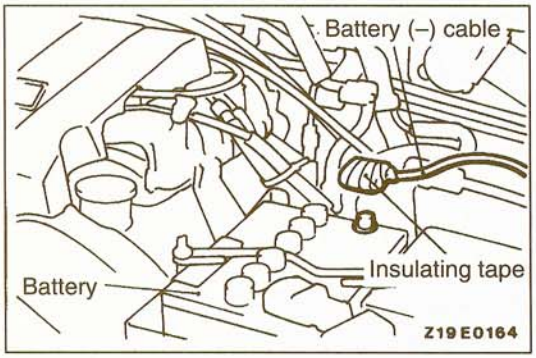


1. Turn the ignition key to the "LOCK" position, disconnect the negative battery cable and tape the terminal.

   **Caution**
   **Wait at least 60 seconds after disconnecting the battery cable before doing any further work. (Refer to P.52B-16.)**

2. Remove the floor console assembly. (Refer to GROUP 52A – Floor Console.)

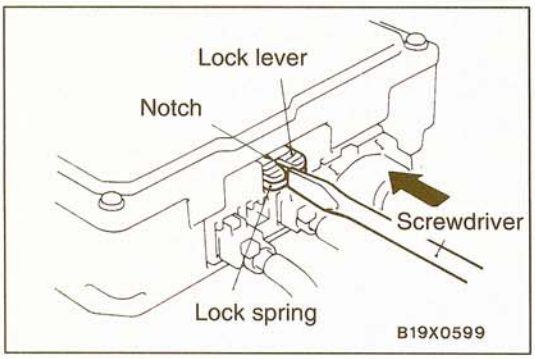


3. Place a flat-tipped (–) screwdriver against the lock spring at the lock lever notch and push the spring toward the unit.

   **Caution**
   **Do not use excessive force to raise the lock leve (green).**

4. Disconnect the red 14-pin connector from the SDU.

If the results of inspection of the SRS warning light drive circuit system (refer to P.52B-31.) are normal, the transistor inside the SDU is probably defective, so replace the SDU.

| Code No. 45 SDU non-volatile memory (EEPROM) and A/D converter system | Probable cause |
|---|---|
| [Comment]<br>This diagnostic trouble code is output if there is a malfunction in the SDU non-volatile memory (EEPROM) or A/D converter. | • Malfunction of SDU |

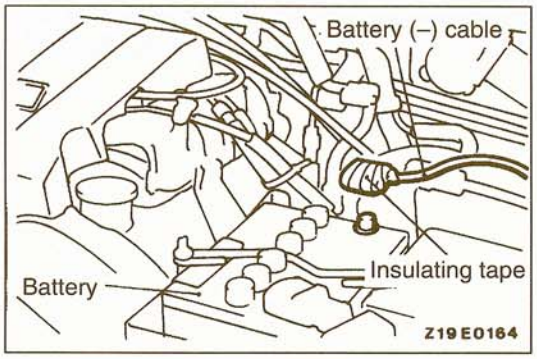


1. Turn the ignition key to the "LOCK" position, disconnect the negative battery cable and tape the terminal.

   **Caution**
   **Wait at least 60 seconds after disconnecting the battery cable before doing any further work. (Refer to P.52B-16.)**

2. Remove the floor console assembly. (Refer to GROUP 52A – Floor Console.)

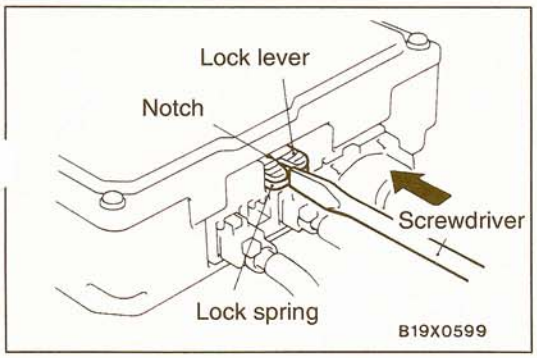


3. Place a flat-tipped (–) screwdriver against the lock spring at the lock lever notch and push the spring toward the unit.

   **Caution**
   **Do not use excessive force to raise the lock lever (green).**

4. Disconnect the red 14-pin connector from the SDU.

The SDU non-volatile memory (EEPROM) or A/D converter is probably defective, so replace the SDU.

**TSB Revision**

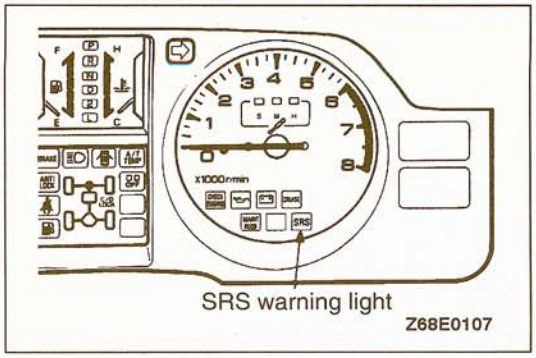


## SRS WARNING LIGHT INSPECTION 52400430014

1. Check to be sure that the SRS warning light illuminates when the ignition switch is in the ON position.
2. Check to be sure that it illuminates for approximate. 7 seconds and then switches off.
3. If the above is not the case, inspect the diagnostic trouble codes.

## INSPECTION CHART FOR TROUBLE SYMPTOMS 52400340041

Get an understanding of the trouble symptoms and check according to the inspection procedure chart.

| Trouble symptom | | Inspection Procedure No. | Reference page |
|---|---|---|---|
| Communication with scan tool is not possible. | Communication with all systems is not possible. | 1 | 52B-36 |
| | Communication is not possible with SRS only | 2 | 52B-36 |
| When the ignition key is turned to "ON" (engine stopped), the SRS warning light does not illuminate. | | Refer to diagnostic trouble code No. 43. | 52B-31 |
| After the ignition switch is turned to ON, the SRS warning light is still on after approximately 7 seconds have passed. | | Refer to diagnostic trouble code No. 43. | 52B-33 |

## INSPECTION PROCEDURE FOR TROUBLE SYMPTOMS

### INSPECTION PROCEDURE 1

| **Communication with scan tool is not possible. (Communication with all systems is not possible)** | **Probable cause** |
|---|---|
| [Comment]<br>The cause is probably in the power supply system (including ground circuit) of the diagnostic line. | • Malfunction of connectors<br>• Malfunction of harness |

Refer to GROUP 35C – Troubleshooting

### INSPECTION PROCEDURE 2

| **Communication with scan tool is not possible. (Communication is not possible with SRS only)** | **Probable cause** |
|---|---|
| [Comment]<br>If communication is not possible with the SRS only, the cause is probably an open circuit in the on-board diagnostic output circuit of the SRS or in the power circuit (including ground circuit). | • Malfunction of harnesses or connectors<br>• Malfunction of SDU |

**TSB Revision**

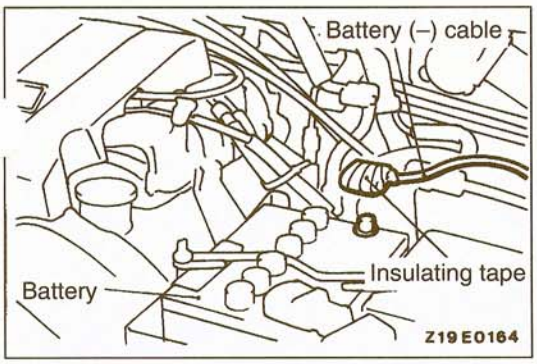


1. Turn the ignition key to the "LOCK" position, disconnect the negative battery cable and tape the terminal.

   **Caution**
   **Wait at least 60 seconds after disconnecting the battery cable before doing any further work. (Refer to P.52B-16.)**

2. Remove the floor console assembly. (Refer to GROUP 52A – Floor Console.)

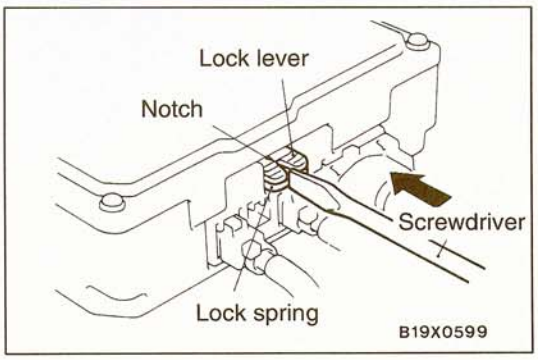


3. Place a flat-tipped (–) screwdriver against the lock spring at the lock lever notch and push the spring toward the unit.

   **Caution**
   **Do not use excessive force to raise the lock lever (green).**

4. Disconnect the red 14-pin connector from the SDU.

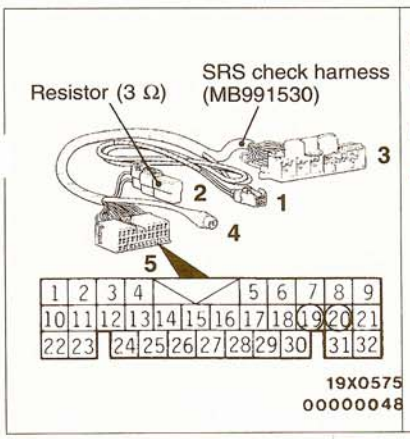


Measure at SRS check harness connector (5).
- Disconnect SDU connector C-40-2.
- Connect SRS check harness connector (3)
- Continuity between terminals (19) – (20)

**OK:** Continuity

NG → **Check the following connector:** C-40-2 → NG → **Repair**

OK → Check trouble symptom

NG → Check the harness between the SDU and ground, and repair if necessary.

OK

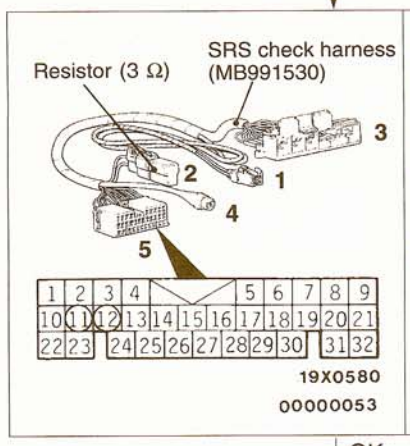


Measure at SRS check harness connector (5).
- Disconnect SDU connector C-40-2.
- Connect SRS check harness connector (3)
- Voltage between the terminal (11) and ground.

**OK:** 9 V or more

- Voltage between the terminal (12) and ground

**OK:** 9 V or more

NG → **Check the following connectors:** C-80, C-93, C-101 and C-62-3 → NG → **Repair**

OK → Check trouble symptom

NG → Check the harness between the SDU and ignition switch $IG_1$ (A) or ignition switch $IG_1$ (B), and repair if necessary.

OK → Inspect the harness between the SDU and data link connector. → NG → **Repair**

OK → Replace the SDU

**TSB Revision**

## MAINTENANCE

52400390046

The SRS must be inspected by an authorized dealer 10 years after the car manufacture date. (Refer to GROUP 00 – Maintenance Service.)

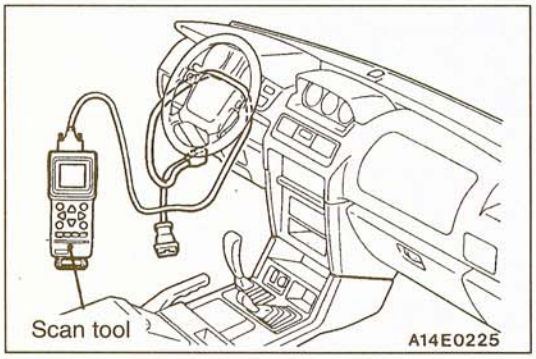


## POST-COLLISION DIAGNOSIS

52400110062

To inspect and service the SRS after a collision (whether or not the air bags has deployed), perform the following steps.

### SRS DIAGNOSIS UNIT MEMORY CHECK

1. Connect the scan tool to the data link connector then check diagnosis codes.

   **Caution**
   **Turn the ignition switch off before connecting or disconnecting the scan tool.**

2. Read (and write down) all displayed diagnostic trouble codes. (Refer to P.52B-19.)

   NOTE
   If the battery power supply has been disconnected or disrupted by the collision, the scan tool cannot communicate with the SRS diagnosis unit. Inspect and, if necessary, repair the body wiring harness before proceeding further.

3. Read the service data (fault duration and how many times the memory was erased) using the scan tool.

   NOTE
   - Maximum stored period: 9999 minutes (approximately 7 days)
   - Maximum number of times to be stored: 250

4. Erase the diagnostic trouble codes then wait 45 seconds or more, read and write down all displayed diagnostic trouble codes. (Refer to P.52B-19.)

## REPAIR PROCEDURE

### WHEN AIR BAG DEPLOYS IN A COLLISION.

1. Replace the following parts with new ones.
   - Front impact sensors (Refer to P.52B-42).
   - SRS diagnosis unit (SDU)(Refer to P.52B-45.)
   - Air bag modules (Refer to P.52B-48.)
2. Check the following parts and replace are any malfunctions.
   - Clock spring (Refer to P.52B-48.)
   - Steering wheel, steering column and intermediate joint.
   (1) Check wiring harness (built into steering wheel) and connectors for damage, and terminals for deformation.
   (2) Install air bag module to check fit or alignment with steering wheel.
   (3) Check steering wheel for noise, binds or difficult operation and excessive free play.
3. Check harnesses for binding, connectors for damage, poor connections, and terminals for deformities. (Refer to P.52B-15.)

### WHEN AIR BAG DOES NOT DEPLOY IN LOW-SPEED COLLISION.

Check the SRS components.
If the SRS components are showing any visible damage such as dents, cracks, or deformation, replace them with new ones. Concerning parts removed for inspection, replacement with new parts and cautionary points for working, refer to appropriate COMPONENT SERVICE, P.52B-41.

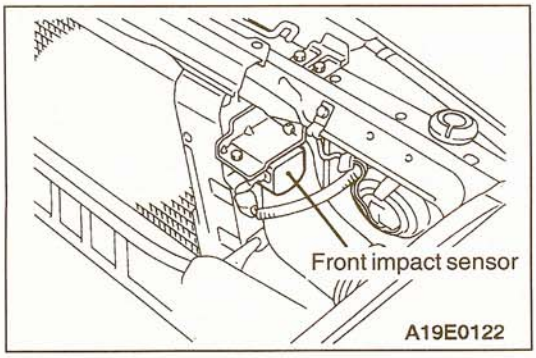


**Front impact sensors**

1. Check radiator support panel for deformities or rust.
2. Check front impact sensor for dents, cracks deformities or rust.
3. Check sensor harnesses for binds, connectors for damage, and terminals for deformities.

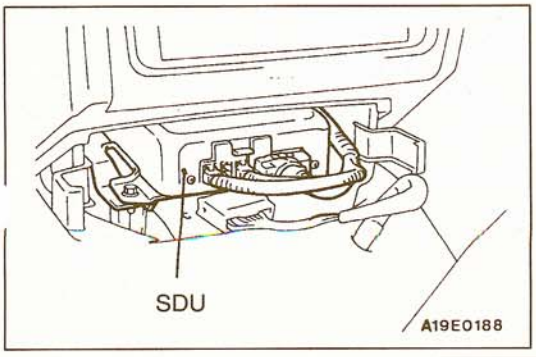


**SRS diagnosis unit (SDU)**

1. Check SDU case and brackets for dents, cracks or deformities.

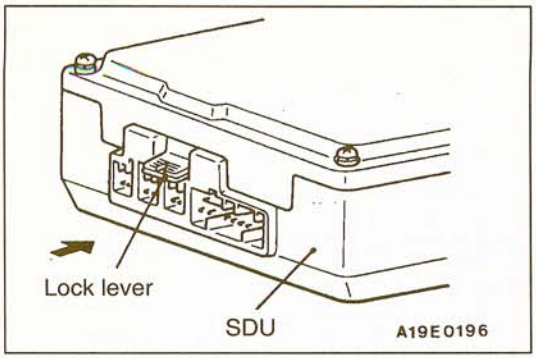


2. Check connectors and lock lever for damage, and terminals for deformities.

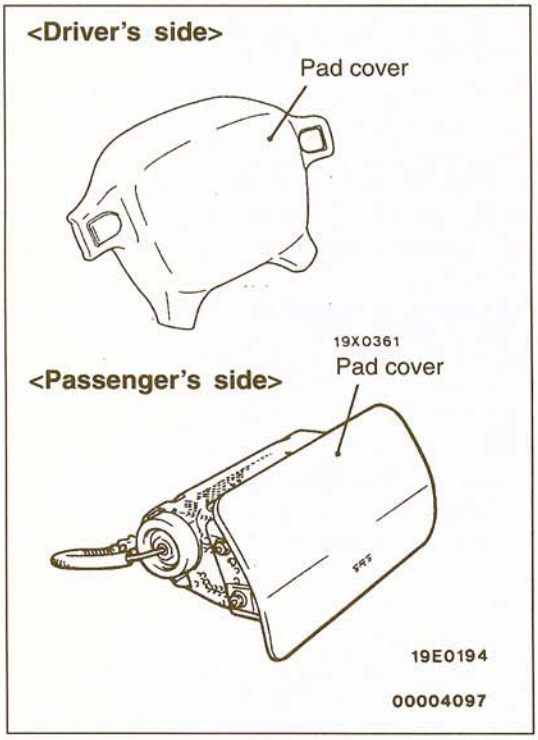


**Air bag module**

1. Check pad cover for dents, cracks or deformities.

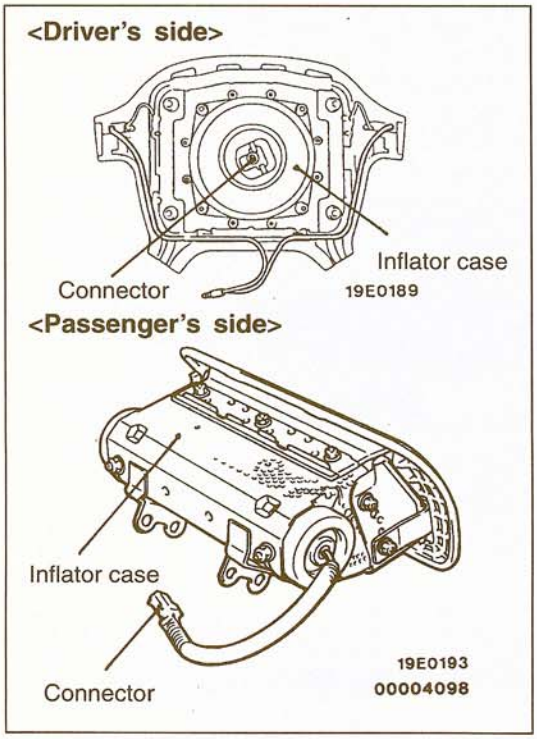


2. Check for connector damage, deformed terminal, and binding harness.
3. Check air bag inflator case for dents, cracks or deformities.
4. Install air bag module to steering wheel to check fit or alignment with the wheel.

**TSB Revision**

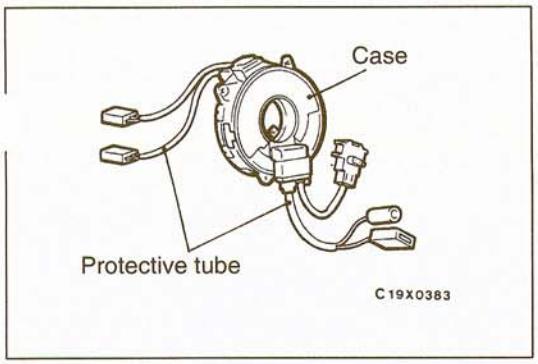


**Clock spring**

1. Check clock spring connectors and protective tube for damage, and terminals for deformities.
2. Visually check the case for damage.

**Steering wheel, steering column and intermediate joint**

1. Check wiring harness (built into steering wheel) and connectors for damage, and terminals for deformities.
2. Install air bag module to check fit or alignment with steering wheel.
3. Check steering wheel for noise, binding, difficult operation, or excessive free play.

**Harness connector (body and front wiring harness)**

Check for binding harness, connector damage, poor connections, and deformed terminals. (Refer to P.52B-15.)

## COMPONENT SERVICE

52400290063

If the SRS components are to be removed or replaced as a result of maintenance, troubleshooting, etc., follow each procedure.

**Caution**

1. **SRS components should not be subjected to heat over 93°C (200°F), so remove the front impact sensors, SRS diagnosis unit, air bag modules and clock spring before drying or baking the vehicle after painting. Recheck SRS system operability after re-installing them.**
2. **If the SRS components are removed for the purpose of inspection, sheet metal repair, painting, etc., they should be stored in a clean, dry place until they are reinstalled.**

# FRONT IMPACT SENSORS

52400150040

**Caution**

1. **Never repair or disassemble a front impact sensor. If faulty, replace it.**
2. **Handle the front impact sensors very carefully, taking care not to drop them or otherwise subject them to impact. If a sensor is seen to be dented, cracked, deformed or rusted, replace it with a new one**
3. **Replace sensors with new ones after the air bags have deployed.**

## REMOVAL AND INSTALLATION

**Pre-removal Operation**
- Turn the ignition key to the "LOCK" position.

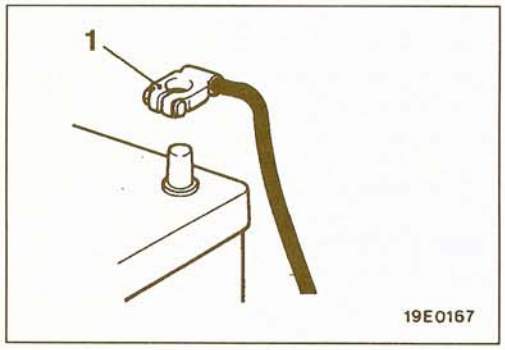


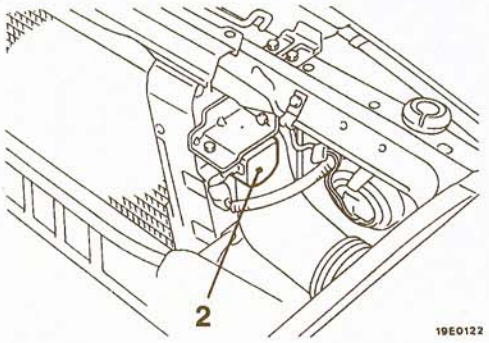


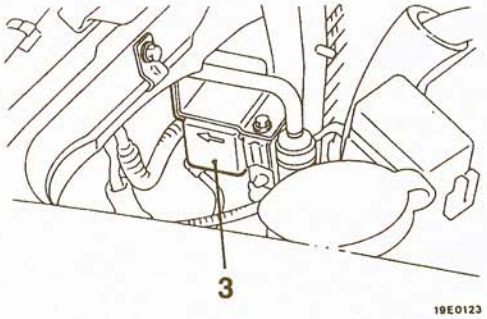


00002021

**Removal steps**

▶C◀ • Post-installation inspection
◀A▶ 1. Negative (–) battery cable connection
◀B▶ ▶B◀ 2. Front impact sensor (R.H.)
◀B▶ ▶B◀ 3. Front impact sensor (L.H.)
• Reserve tank
▶A◀ • Pre-installation inspection

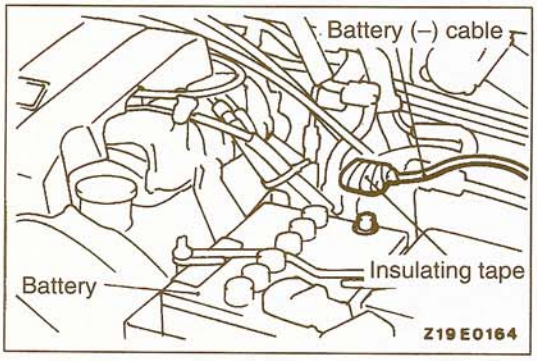


## REMOVAL SERVICE POINTS

### ◀A▶ NEGATIVE (–) BATTERY CABLE DISCONNECTION

Disconnect the negative battery cable from the battery and tape the terminal.

**Caution**

**Wait at least 60 seconds after disconnecting the battery cable before doing any further work. (Refer to P.52B-16.)**

TSB Revision

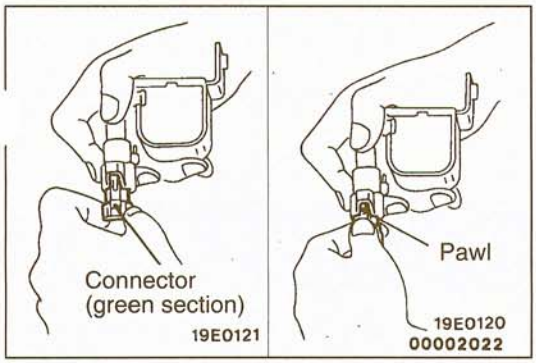


### ◀B▶ FRONT IMPACT SENSOR (R.H.)/FRONT IMPACT SENSOR (L.H.) REMOVAL

(1) Slide the connector (green section) to release the lock.
(2) Push down the pawl, and then disconnect the connector.

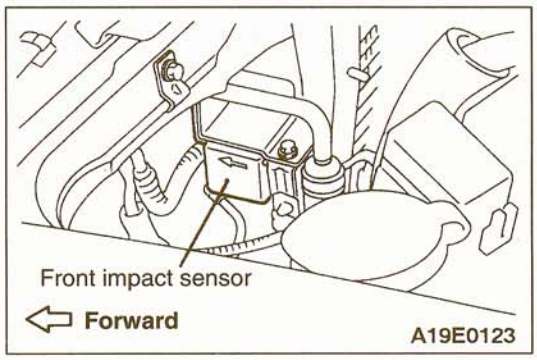


## INSTALLATION SERVICE POINTS

### ▶A◀ PRE-INSTALLATION INSPECTION

To mount the new front impact sensor, visually check it and measure the resistance between the terminals. (Refer to the previous item "INSPECTION")

### ▶B◀ FRONT IMPACT SENSOR (L.H.)/FRONT IMPACT SENSOR (R.H.) INSTALLATION

(1) Securely connect the connector.
(2) Set the front impact sensor towards the front of the vehicle as shown by the arrow in the illustration, and install it securely.

**Caution**
**The SRS may not activate properly if a front impact sensor is not installed properly, which could result in the SRS system not operating properly during a collision.**

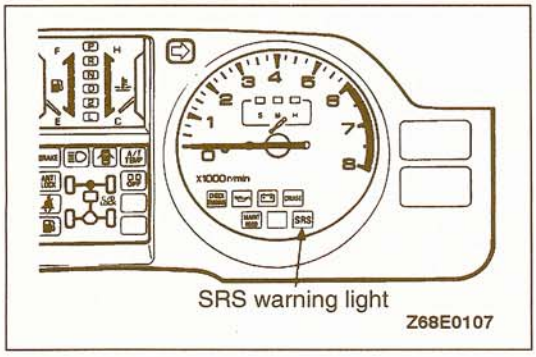


### ▶C◀ POST-INSTALLATION INSPECTION

Reconnect the negative battery terminal. Turn the ignition key to the "ON" position. Does the "SRS" warning light illuminate for about 7 seconds, turn OFF and then remain OFF for at least 45 seconds? If yes, SRS system is functioning properly. If no, consult page 52B-36.

## INSPECTION

52400160043

(1) Check upper frame and sensor brackets for deformities or rust.
(2) Check sensor harness for binds, connectors for damage and terminals for deformities.
(3) Check for dents, cracks, deformation or rust of the front impact sensor.

**Caution**
**If a dent, crack, deformation or rust is detected, replace with a new sensor.**

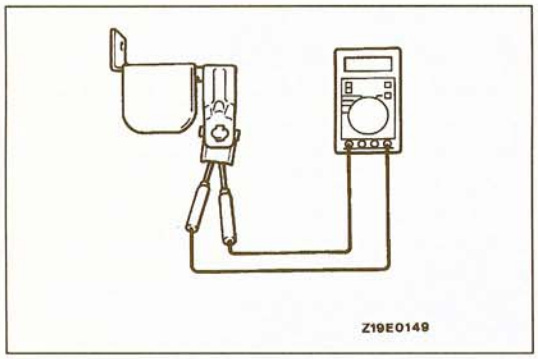


(4) Measure the resistance between terminals and check whether it is within the standard value.

**Standard value: 2,000 ± 20 Ω**

**Caution**
**Always replace the sensor with a new one if the resistance is not within the standard value.**

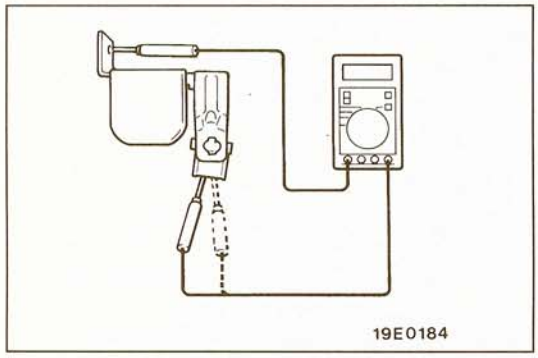


(5) Check for continuity between the terminals and the brackets.
If there is continuity, the sensor insulation is defective, and so the sensor should be replaced with a new one.

# SRS DIAGNOSIS UNIT (SDU)

52400180018

**Caution**

1. **Never attempt to disassemble or repair the SDU. If faulty, replace it.**
2. **Do not drop or subject the SDU to impact or vibration. If dents, cracking, deformation, or rust are discovered on the SDU, replace it with a new SDU. Discard the old one.**
3. **After deployment of the air bags, replace the SDU with a new one.**
4. **Never use an ohmmeter on or near the SDU, and use only the special test equipment described on P.52B-17.**

## REMOVAL AND INSTALLATION

**Pre-removal Operation**
- Turn the ignition key to the "LOCK" position.

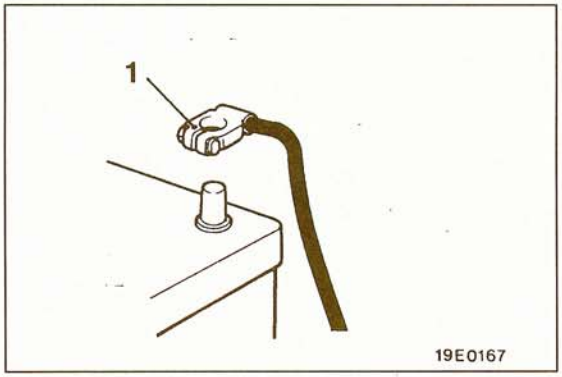


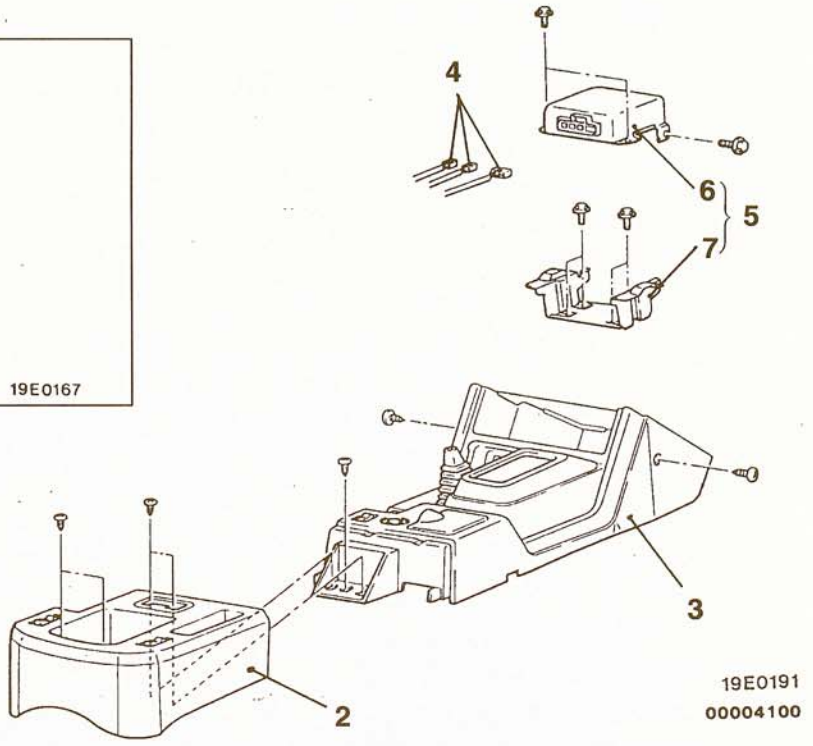


**Removal steps**

- ▶C◀ ● Post-installation inspection
- ◀A▶ 1. Negative (–) battery cable connection
- 2. Rear console assembly
- 3. Front console assembly
- ◀B▶ ▶B◀ 4. SRS diagnosis unit and harness connector connection
- 5. SRS diagnosis unit assembly
- ▶A◀ 6. SRS diagnosis unit (SDU)
- 7. Bracket

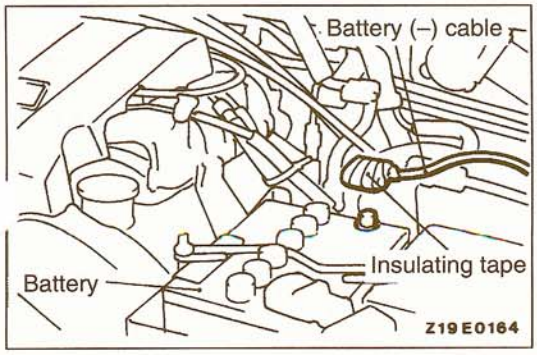


## SERVICE POINTS OF REMOVAL

### ◀A▶ NEGATIVE (–) BATTERY CABLE DISCONNECTION

Disconnect the negative battery cable from the battery and tape the terminal.

**Caution**

**Wait at least 60 seconds after disconnecting the battery cable before doing any further work. (Refer to P.52B-16.)**

**TSB Revision**

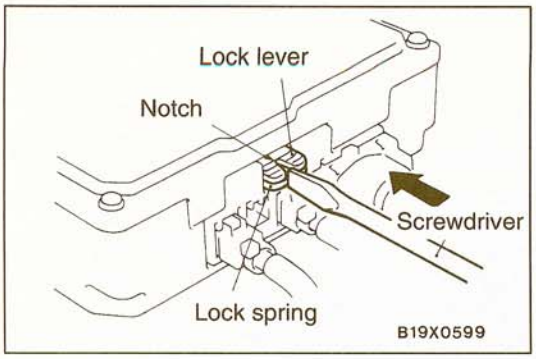


### ◀B▶ SDU AND HARNESS CONNECTOR DISCONNECTION

(1) Place a flat-tipped (–) screwdriver against the lock spring at the lock lever notch and push the spring toward the unit.

**Caution**
**Do not use excessive force to raise the lock lever (green).**

(2) While pushing the locks of each connector downward, remove each connector from the SDU.

**Caution**
**Because a double lock mechanism is employed for the SDU connectors, be careful not to exert undue force to remove the connectors, as this will damage them.**

## INSTALLATION SERVICE POINTS

### ▶A◀ SRS DIAGNOSIS UNIT (SDU) INSTALLATION

**Caution**
**The SRS may not activate if SDU is not installed properly, which could result in the SRS system not operating properly in a collision.**

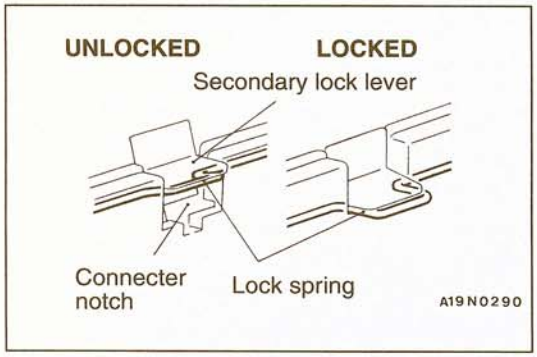


### ▶B◀ SDU AND HARNESS CONNECTOR CONNECTION

After connecting each harness connector securely and correctly to the SDU, be sure to press down the lock lever of the SDU.

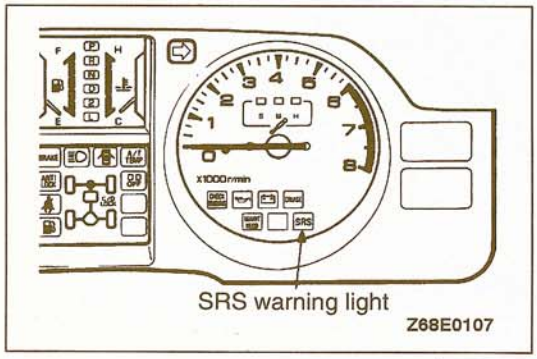


### ▶C◀ POST INSTALLATION INSPECTION

Reconnect the negative battery terminal. Turn the ignition key to the "ON" position. Does the "SRS" warning light illuminated for about 7 seconds, turn OFF and then remain OFF for at least 45 seconds? If yes, SRS system is functioning properly. If no, consult page 52B-36.)

**TSB Revision**

## INSPECTION

52400190011

- Check the SDU case and brackets for dents, cracks or deformities.
- Check connectors and lock lever for damage, and terminals for deformities.

**Caution**
**If a dent, cracks, deformation or rust is discovered, replace the SDU with a new one.**

NOTE
For checking of the SDU other than described above, refer to the section concerning troubleshooting. (Refer to P.52B-18.)

# AIR BAG MODULE AND CLOCK SPRING

52400240068

**Caution**

1. **Never attempt to disassemble or repair the air bag module or clock spring. If faulty, replace it.**
   **Do not drop the air bag module or clock spring or allow contact with water, grease or oil. Replace it if a dent, crack, deformation or rust are detected.**
2. **The air bag module should be stored on a flat surface and placed so that the pad surface is facing upward.**
   **Do not place anything on top of the air ba modules.**
4. **Do not expose the air bag module to temperature over 93°C (200°F).**
5. **After deployment of an air bag, replace the clock spring with a new one.**
6. **Wear gloves and safety glasses when handling an air bag that has deployed.**
7. **An undeployed air bag module should only be disposed of in accordance with the procedures P.52B-54.**

## REMOVAL AND INSTALLATION

**Pre-removal Operation**
- After setting the steering wheel and the front wheels, to the straight ahead position, remove the ignition key.

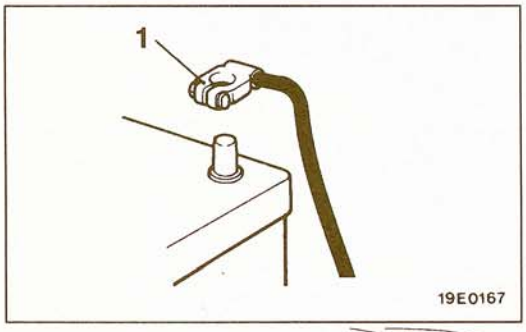


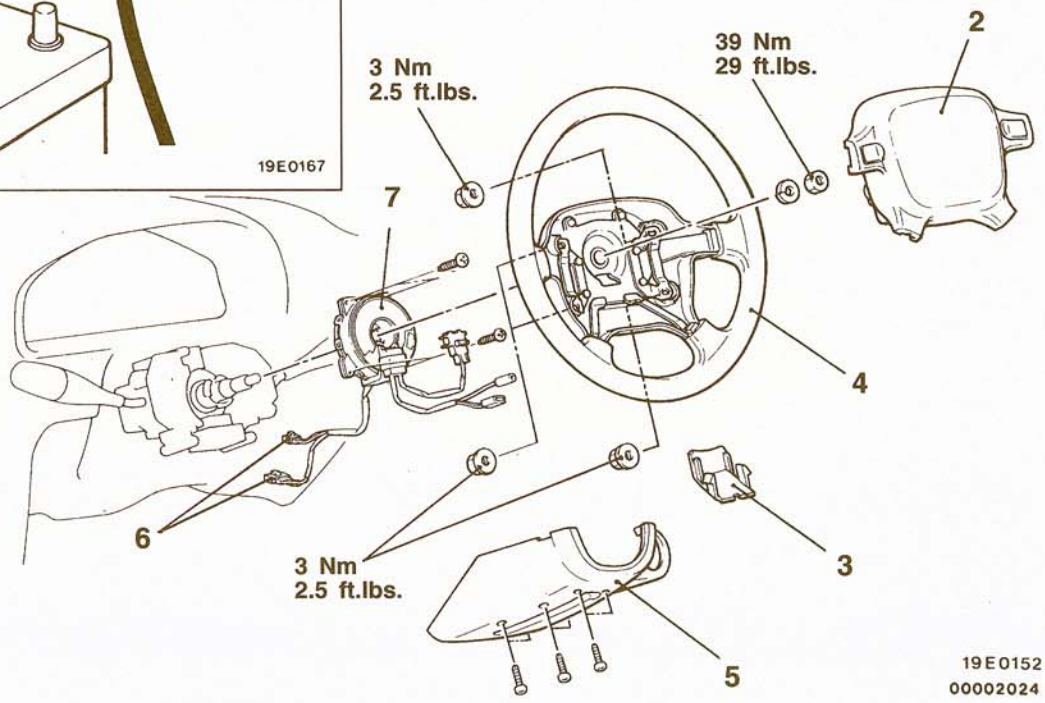


**Clock spring removal steps**

- ▶E◀ • Post-installation inspection
- ◀A▶ 1. Negative (–) battery cable connection
- ◀B▶ ▶D◀ 2. Air bag module (Driver's side)
- 3. Cap
- ◀C▶ ▶C◀ 4. Steering wheel
- 5. Column cover lower
- 6. Clock spring and body wiring harness connection
- ▶B◀ 7. Clock spring
- ▶A◀ • Pre-installation inspection

**Air bag module removal steps (Driver's side)**

- ▶E◀ • Post-installation inspection
- ◀A▶ 1. Negative (–) battery cable connection
- ◀B▶ ▶D◀ 2. Air bag module (Driver's side)
- ▶A◀ • Pre-installation inspection

**TSB Revision**

**<Air bag module (Passenger's side)>**

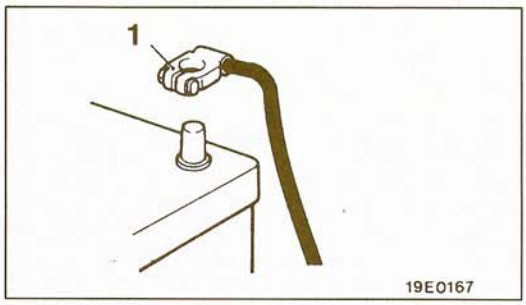


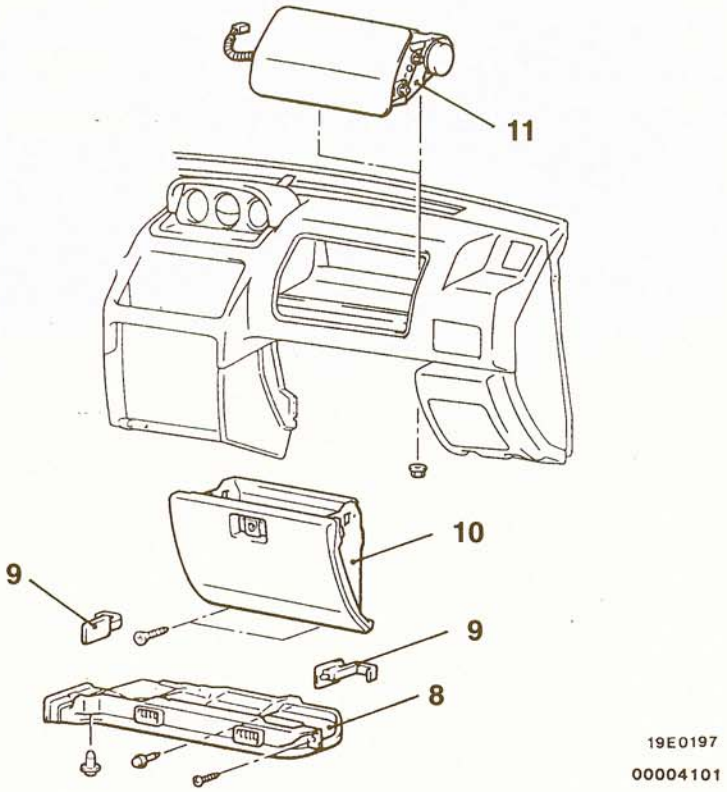


**Air bag module removal steps (Passenger's side)**

▶E◀ • Post-installation inspection
◀A▶ 1. Negative (–) battery cable connection
8. Foot shower duct (R.H.)
9. Stopper
10. Glove box
11. Air bag module (Passenger's side)
▶A◀ • Pre-installation inspection

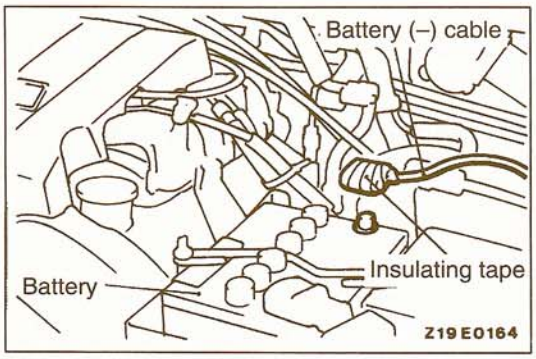


## REMOVAL SERVICE POINTS

### ◀A▶ NEGATIVE (–) BATTERY CABLE DISCONNECTION

Disconnect the negative battery cable from the battery and tape the terminal.

**Caution**
**Wait at least 60 seconds after disconnecting the battery cable before doing any further work. (Refer to P.52B-16.)**

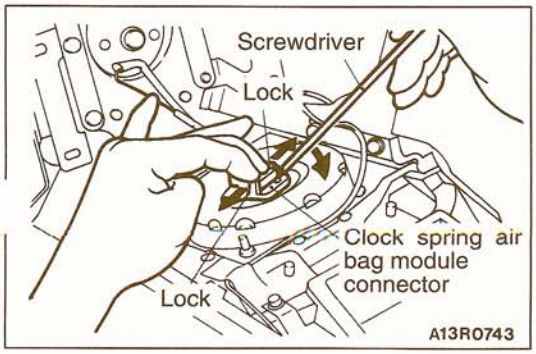


### ◀B▶ AIR BAG MODULE REMOVAL

(1) Remove the air bag module mounting nut using a socket wrench from the back side.
(2) When disconnecting the connector of the clock spring from the air bag module, press the air bag's lock toward the outer side to spread it open. Use a screwdriver, as shown in the figure at the left, to pry so as to remove the connector gently.

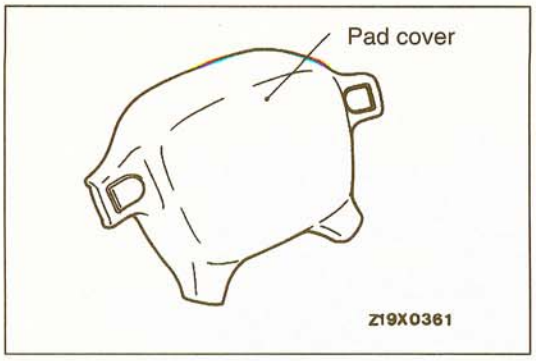


**Caution**
1. **Wait disconnection the air bag module-clock spring connector, take not to apply excessive force to it.**
2. **The removed air bag module should be stored in a clean, dry place with the pad cover face up.**

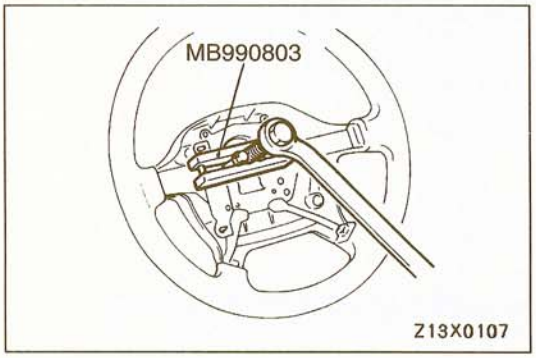


### ◀C▶ STEERING WHEEL REMOVAL

**Caution**
**Do not hammer on the steering wheel. Doing so may damage the collapsible column mechanism.**

## INSTALLATION SERVICE POINTS

### ▶A◀ PRE-INSTALLATION INSPECTION

(1) When installing the new air bag module and clock spring, refer to "INSPECTION"

**Caution**
**Dispose of an air bag module only according to the specified procedure. (Refer to P.52B-54.)**

(2) Connect the battery (–) terminal.

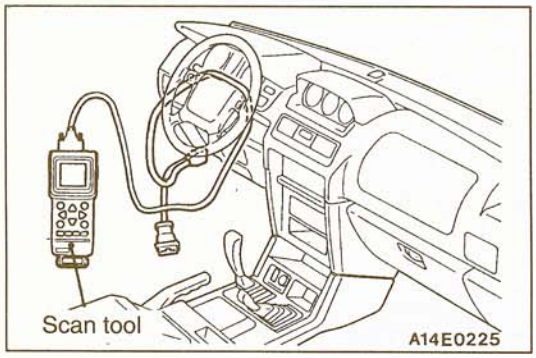


(3) Connect the scan tool to the data link connector then check diagnostic codes.

**Caution**
**Turn the ignition switch off before connecting or disconnecting the scan tool.**

(4) Turn the ignition key to the "ON" position.
(5) Conduct diagnostic test mode using the scan tool to ensure entire SRS operates properly, except open circuit of air bag module (diagnostic trouble code No. 22, 25).

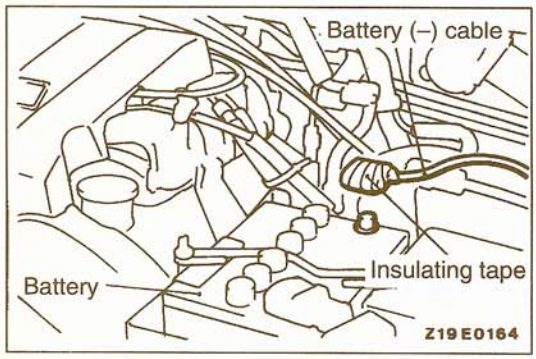


(6) Turn the ignition key to the "LOCK" position, disconnect the negative battery cable and tape the terminal.

**Caution**
**Wait at least 60 seconds after disconnecting the battery cable before doing any further work. (Refer to P.52B-16.)**

TSB Revision

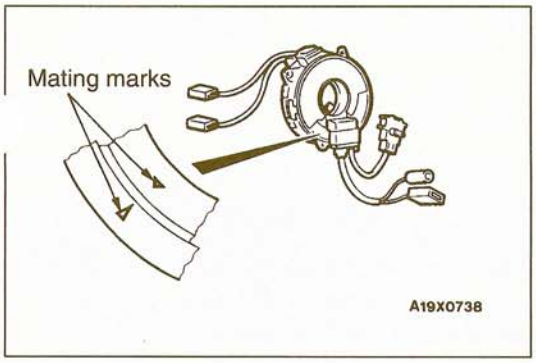


### ▶B◀ CLOCK SPRING INSTALLATION

Align the mating marks of the clock spring by means of the following method, and then, install the clock spring to the column switch.

**Mating Mark Alignment**

Turn the clock spring clockwise fully, and then turn back it approx. 3 and 1/3 turns counterclockwise to align the mating marks.

**Caution**

**If the clock spring's mating mark is not properly aligned, the steering wheel may not be completely rotational during a turn, or the flat cable within the clock spring may be severed, obstructing normal operation of the SRS.**

### ▶C◀ STEERING WHEEL INSTALLATION

(1) Before installing the steering wheel, be sure to first turn the vehicle's front wheels to the straight-ahead position.

**Caution**

**Be sure when installing the steering wheel, that the harness of the clock spring down not become caught or tangled.**

(2) After tightening, turn the steering wheel all the way in both directions to confirm that steering is normal.

### ▶D◀ AIR BAG MODULE INSTALLATION

Route the horn switch harnesses as shown in the illustration, and then install the air bag module without clamping the harnesses.

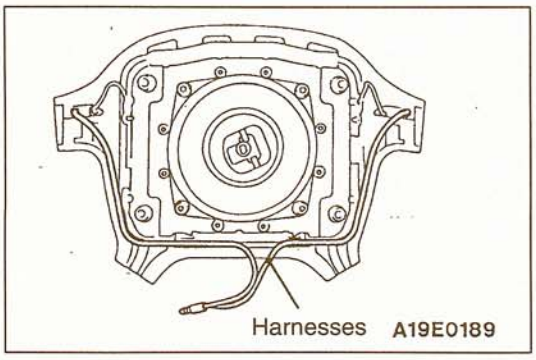


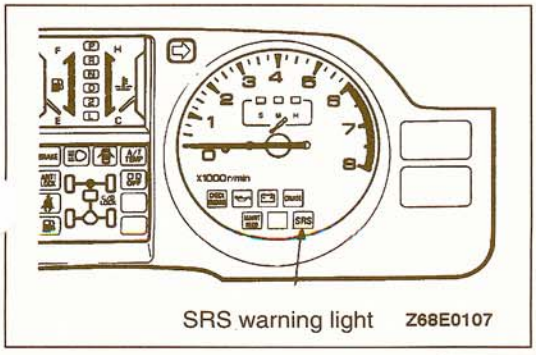


### ▶E◀ POST-INSTALLATION INSPECTION

(1) After installing the clock spring, the steering wheel, the column covers and the air bag module, check steering wheel for noise, binds or difficult operation.

(2) Reconnect the negative battery terminal. Turn the ignition key to the "ON" position. Does the "SRS" warning light illuminate for about 7 seconds, turn OFF and then remain OFF for at least 45 seconds? If yes, SRS system is functioning properly. If no, consult page 52B-36.)

## INSPECTION

52400250061

### AIR BAG MODULE

If any improper part is found during the following inspectior replace the air bag module with a new one.
Dispose of the old one according to the specified procedure. (Refer to P.52B-54.)

**Caution**
**Never attempt to measure the circuit resistance of the air bag module (squib) even if you are using the specified tester. If the circuit resistance is measured with a tester, accidental air bag deployment will result in serious personal injury.**

(1) Check pad cover for dents, cracks or deformities.
(2) Check the air bag module for dents, cracking or deformation.
(3) Check hooks and connectors for damage, terminals for deformities, and harness for binds.
(4) Check air bag inflator case for dents, cracks or deformities.

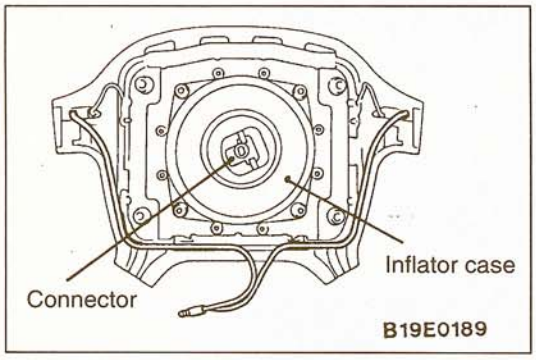


(5) Install the air bag module on the steering wheel to check alignment with the wheel.

### CLOCK SPRING

If, as result of the following checks, even one abnormal point is discovered, replace the clock spring with a new one.
(1) Check connectors and protective tube for damage, and terminals for deformities.
(2) Visually check the case for damage.

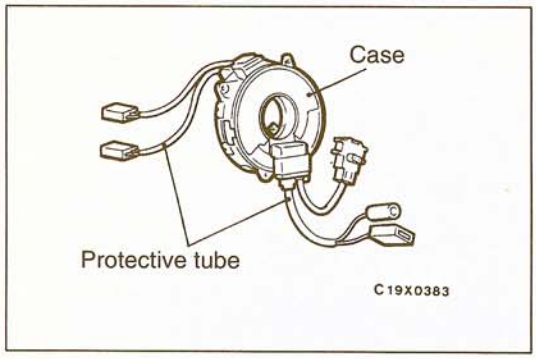

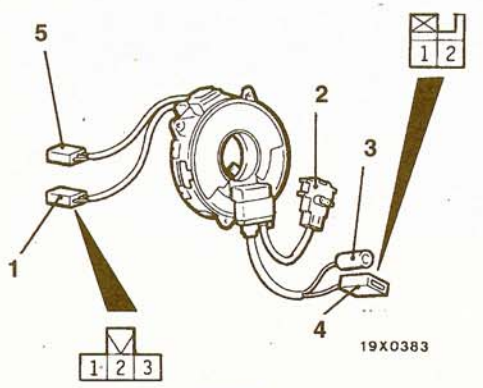


19X0382

00002026

(3) Check for continuity between the No.1 connector of the clock spring and connectors No. 3 and 4

| No.1 connector | | | No.3 connector | No.4 connector | |
|---|---|---|---|---|---|
| Terminal 1 | Terminal 2 | Terminal 3 | | Terminal 1 | Terminal 2 |
| | | | | | |
| To auto-cruise control unit | To ACC power | To horn relay | To horn switch | To auto-cruise control switch | |

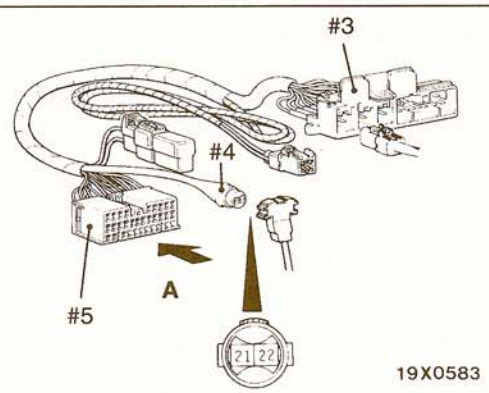


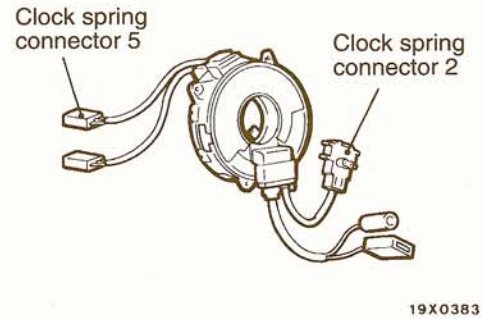


**View A**

SRS check connector #5

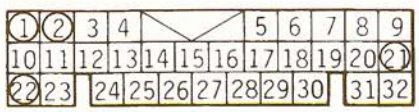


19X0597

00000062

(4) Check of resistance between the terminals.

a. Join the No. 2 connector and No. 5 connector of the clock spring to connector # 4 and connector # 3, respectively, of the SRS Check Harness.

NOTE
When joining SRS Check Harness connector # 4, align its white paint with the hollow portion of the No.2 connector of the clock spring.

b. Check for continuity between terminal 1 and terminal 22, and terminal 2 and terminal 21, of SRS Check Harness connector # 5, using a digital multi-meter.

**Standard value: less than 0.4 Ω**

# AIR BAG MODULE DISPOSAL PROCEDURES

52400120065

Before either disposing of a vehicle equipped with an air bag, or prior to disposing of the air bag module, be sure to first follow the procedures described below to deploy the air bag.

## UNDEPLOYED AIR BAG MODULE DISPOSAL

**Caution**

1. **If the vehicle is to be scrapped, or otherwise disposed of, deploy the air bag inside the vehicle.**
   **If the vehicle will continue to be operated and only the air bag module is to be disposed of, deploy the air bag outside the vehicle.**
2. **Since a large amount of smoke is produced when the air bag is deployed, select a well-ventilated site. Moreover, never attempt the test near a smoke sensor.**
3. **Since there is a loud noise when the air bag is deployed, avoid residental areas whenever possible. If anyone is nearby, give warning of the impending noise.**
4. **Suitable ear protection should be worn by personnel performing these procedures or by people in the immediate area.**

### DEPLOYMENT INSIDE THE VEHICLE

**(when disposing a vehicle)**

(1) Open all windows and doors of the vehicle. Move the vehicle to an isolated spot.
(2) Disconnect the negative (–) and positive (+) battery cables from the battery terminals, and then remove the battery from the vehicle.

**Caution**
**Wait at least 60 seconds after disconnecting the battery cables before doing any further work. (Refer to P.52B-16.)**

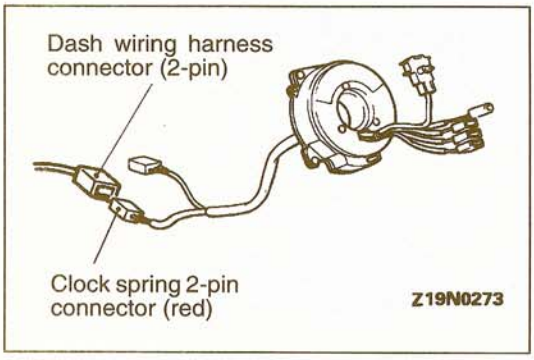


(3) Remove the steering column cover lower.
(4) Remove the connection between the clock spring 2-pin connector (red) and the dash wiring harness connector.

NOTE
If the clock spring connector is disconnected from the dash wiring harness, both electrodes of the clock spring connector will be automatically shorted to prevent unintended deployment of the air bag due to static electricity, etc.

TSB Revision

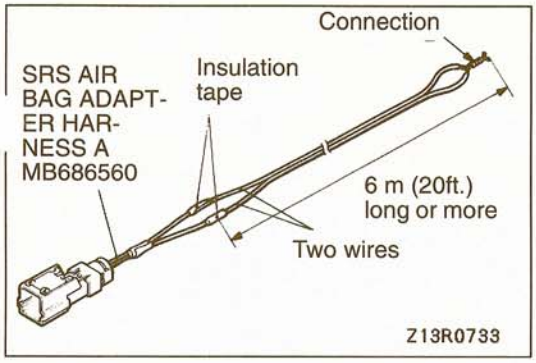


(5) Connect two wires, each six meters (20 feet) long or more, to the two leads of SRS AIR BAG ADAPTER HARNESS A and cover the connections with insulation tape. The other ends of the two wires should be connected to each other (short-circuited), to prevent sudden unexpected deployment of the air bag.

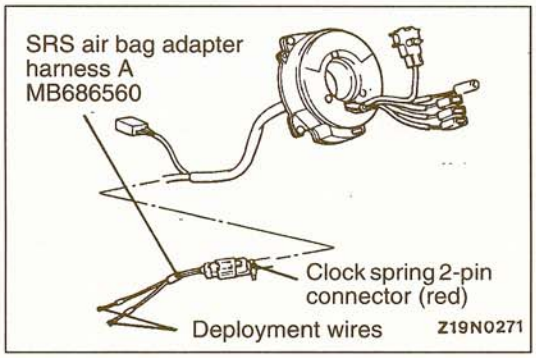


(6) Connect the clock spring 2-pin connector (red) to SRS air bag adapter harness A and pass the deployment wires out of the vehicle.

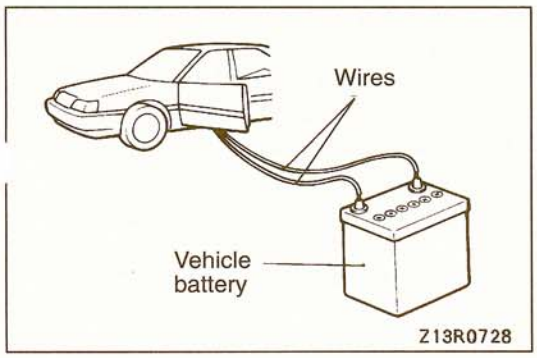


(7) At a location as far away from the vehicle as possible, disconnect the two connected wires from each other, and connect them to the two terminals of the battery (removed from the vehicle) to deploy the air bag.

**Caution**

1. **Before deploying the air bag in this manner, first check to be sure that there is no one in or near the vehicle. Wear safety glasses, suitable ear protection.**
2. **The inflator will be quite hot immediately following the deployment, so wait at least 30 minutes to allow it to cool before attempting to handle it. Although not poisonous, do not inhale gas from air bag deployment. See Deployed Air Bag Module Disposal Procedures (P.52B-58.) for post-deployment handling instructions.**
3. **If the air bag module fails to deploy when the procedures above are followed, do not go near the module. Contact your local distributor.**

(8) Dispose of the air bag module after deployment according to the Deployed Air Bag Module Disposal Procedures. (Refer to P.52B-58.)

### DEPLOYMENT OUTSIDE THE VEHICLE

**Caution**

1. **Should be carried out in a wide, flat area at least 6 m (20 feet) away from obstacles and other people.**
2. **Do not perform deployment outside, if a strong wind is blowing, and if there is even a slight breeze, the air bag module should be placed and deployed downwind from the battery.**

(1) Disconnect the negative (–) and positive (+) battery cables from the battery terminals, and then remove the battery from the vehicle

**Caution**
**Wait at least 60 seconds after disconnecting the battery cables before doing any further work. (Refer to P.52B-16.)**

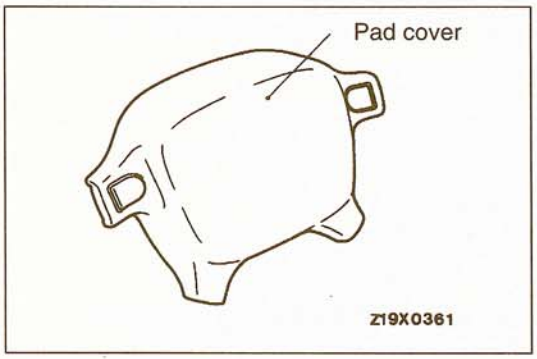


(2) Remove the air bag module from the vehicle. (Refer to P.52B-48.)

**Caution**
**The air bag module should be stored on a flat surface and placed so that the pad cover face up. Do not place anything on top of it.**

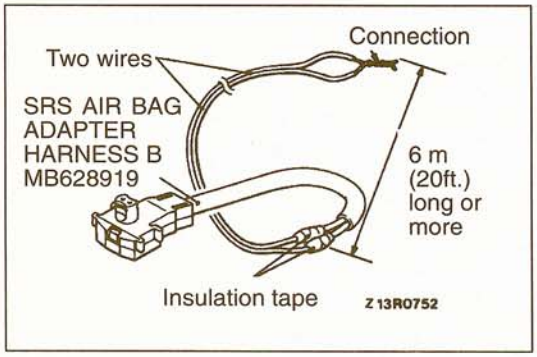


(3) Connect two wires, each six meters (20 feet) long or more, to the two leads of SRS AIR BAG ADAPTER HARNESS B, and cover the connections with insulation tape. The other ends of the two wires should be connected to each other (short-circuited), to prevent sudden unexpected deployment of the air bag.

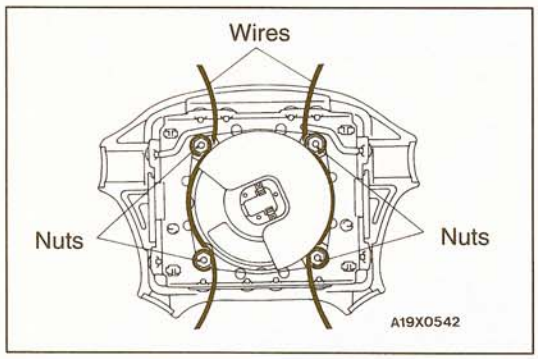


**<Driver's side>**

1. Install nuts that are no longer needed to the four bolts on the rear side of the air bag module, and tie on some thick wire to secure to the wheel.
2. Take the SRS air bag adaptor harness B that is connected to the wires, pass it beneath the old tire wheel assembly, and connect it to the air bag module.

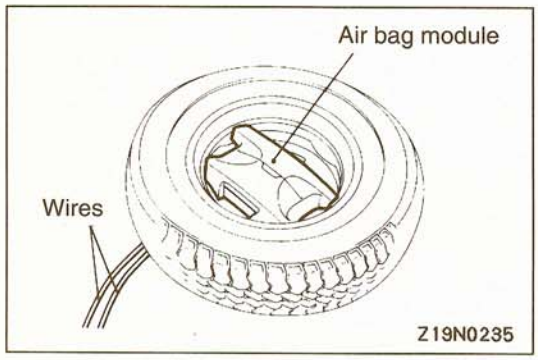


3. Insert the air bag module into the wheel, and secure it with wires that are tied to the bolt holes, the air bag should face upward.

**Caution**
**Leave some space below the wheel for the adaptor harness. If there is no space, the reaction when the air bag deploys could damage the adaptor harness**

**TSB Revision**

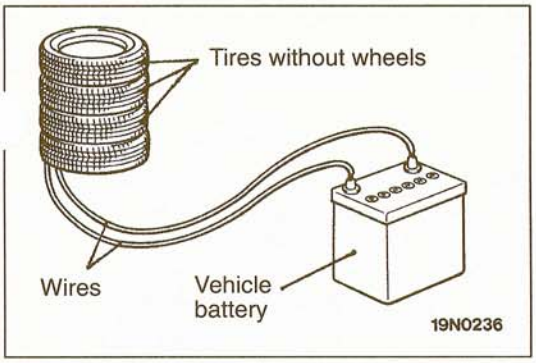


4. Place three old tires, without wheels, on top of the tire secured to the air bag module.

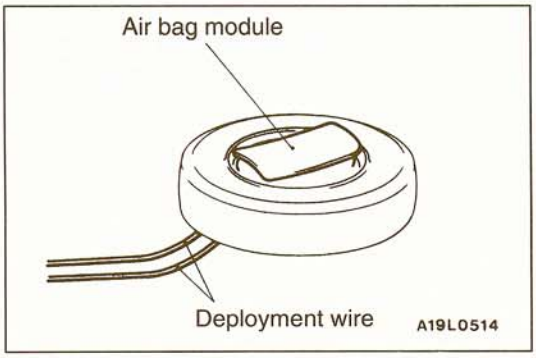


**<Passenger's side>**

1. Connect the deployment wires to the SRS air bag adapter harness A, pass it beneath the tire, and wheel assembly, and connect it to the air bag module.
2. Pass the thick wires into the hole of the air bag module bracket, and secure it to the wheel of the old tire with wheel (4 locations), with the air bag facing upwards.

   **Caution**
   1. **Leave some space below the wheel for the deployment wires.**
      **If there is no space, the reaction of the air bag deployment could result in damage of the adaptor harness.**
   2. **While deployment takes place, do not have the connector of the SRS air bag adaptor harness A inserted between the tires.**
3. Place three old tires, without wheels, on top of the tire secured to the air bag module, and secure all tires with ropes (4 locations).

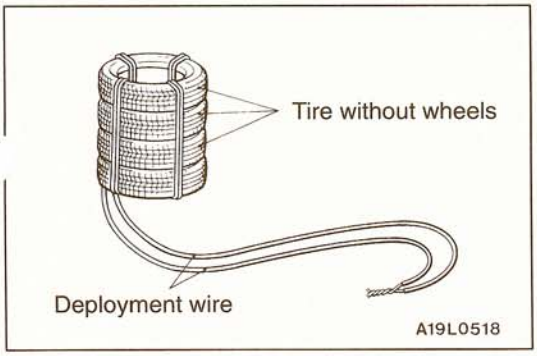


4. At a location as far away from the air bag module as possible, and from a shielded position, if possible, disconnect the two connected wires from each other and connect them to the two terminals of the battery (removed from the vehicle) to deploy the air bag.

   **Caution**
   1. **Before deployment, check carefully to be sure that no one is nearby.**
   2. **The inflator will be quite hot immediately following deployment, so wait at least 30 minutes to allow it to cool before attempting to handle it.**
      **Although not poisonous, do not inhale gas from air bag deployment. See Deployed Air Bag Module Disposal Procedures (as shown below) for post-deployment handling instructions.**
   3. **If the air bag module fails to deploy when the procedures above are followed, do not go near the module. Contact your local distributor.**
5. Dispose of the air bag module after deployment according to the Deployed Air Bag Module Disposal Procedures.

## DEPLOYED AIR BAG MODULE DISPOSAL

After deployment, the air bag module should be disposed of in the same manner as any other scrap parts, except that the following points should be carefully noted during disposa

(1) The inflator will be quite hot immediately following deployment, so wait at least 30 minutes to allow it to cool before attempting to handle it.
(2) Do not put water or oil on the air bag after deployment.
(3) There may be, adhered to the deployed air bag module, material that could irritate the eyes and/or skin, so wear gloves and safety glasses when handling a deployed air bag module. IF DESPITE THESE PRECAUTIONS, THE MATERIAL DOES, GET INTO THE EYES OR ON THE SKIN, IMMEDIATELY RINSE THE AFFECTED AREA WITH A LARGE AMOUNT OF CLEAN WATER.
IF ANY IRRITATION DEVELOPS, SEEK MEDICAL ATTENTION.

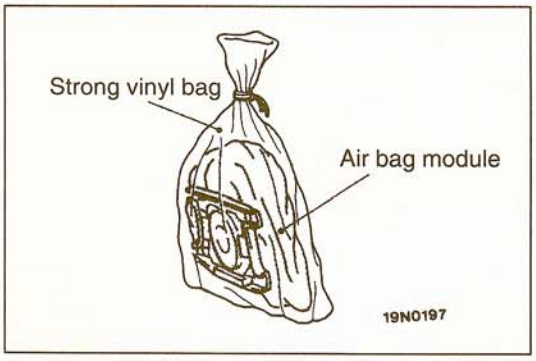


(4) Tightly seal the air bag module in a strong vinyl bag for disposal.
(5) Be sure to always wash your hands after completing this operation.

# HEATER, AIR CONDITIONING AND VENTILATION

## CONTENTS

55109000041


AIR CONDITIONING ..... 11
AIR CONDITIONING CONTROL UNIT .... 28
AIR CONDITIONING SWITCH ..... 25
COMPRESSOR AND TENSION PULLEY ..... 32
CONDENSER AND CONDENSER FAN MOTOR ..... 29
EVAPORATOR ..... 26
GENERAL SPECIFICATIONS ..... 11
LUBRICANTS ..... 11
ON-VEHICLE SERVICE ..... 16
Charging ..... 18
Compressor Drive Belt Adjustment ..... 17
Compressor Noise ..... 24
Handling Tubing and Fittings ..... 23
Idle-up Operation Check ..... 25
Performance Test ..... 22
Power Relay Check ..... 25
Refrigerant Leak Repair Procedure ..... 23
Test Procedures ..... 16
REFRIGERANT LINE ..... 30
SAFETY PRECAUTIONS ..... 15
SEALANT ..... 12
SERVICE SPECIFICATIONS ..... 11
TROUBLESHOOTING ..... 12
HEATER ..... 2
BLOWER ASSEMBLY ..... 7
GENERAL SPECIFICATIONS ..... 2
HEATER CONTROL ASSEMBLY ..... 3
HEATER UNIT* ..... 6
ON-VEHICLE SERVICE ..... 3
Power Relay Check ..... 3
SERVICE SPECIFICATIONS ..... 2
TROUBLESHOOTING ..... 2
VENTILATORS (AIR OUTLET) ..... 10
VENTILATORS (INSTRUMENT PANEL AND FLOOR)* .... 9


**WARNING REGARDING SERVICING OF SUPPLEMENTAL RESTRAINT SYSTEM (SRS) EQUIPPED VEHICLES**

**WARNING**

**(1) Improper service or maintenance of any component of the SRS, or any SRS-related component, can lead to personal injury or death to service personnel (from inadvertent firing of the air bag) or to the driver (from rendering the SRS inoperative.)**

**(2) Service or maintenance of any SRS component or SRS-related component must be performed only by an authorized MITSUBISHI dealer.**

**(3) MITSUBISHI dealer personnel must thoroughly review this manual, and especially its GROUP 52B – Supplemental Restraint System (SRS) and GROUP 00 – Maintenance Service before beginning any service or maintenance of any component of the SRS or any SRS-related component.**

NOTE

The SRS includes the following components: impact sensors, SRS diagnosis unit, SRS warning light, air bag module, clock spring and interconnecting wiring. Other SRS-related components that may have to be removed or installed in connection with SRS service or maintenance are indicated in the table of contents by an asterisk (*).

# HEATER

55100020015

## GENERAL SPECIFICATIONS

| Items | Specifications |
|---|---|
| Type | Three-way-flow full-air-mix system |
| Performance kJ/h (kcal/h,B.T.U./h) | 16,744 (4,000, 15,873) |

## SERVICE SPECIFICATIONS

55100030018

| Items | | Standard value |
|---|---|---|
| Resistance value of resistor (for blower motor assembly) Ω | Between terminals 2 – 4 | 1.96 ± 7% |
| | Between terminals 1 – 2 | 0.95 ± 7% |
| | Between terminals 2 – 3 | 0.33 ± 7% |

## TROUBLESHOOTING

55100070010

| Symptom | Probable cause | Remedy |
|---|---|---|
| Improper heat | Obstructed floor outlets | Correct |
| | Changeover dampers improperly adjusted or binding | Correct |
| | Obstructed heater hoses | Replace |
| | Improperly adjusted control cables | Adjust |
| | Partially plugged heater core | Clean or replace |
| No ventilation even when mode selection lever is operated | Incorrect adjustment of changeover dampers | Adjust |
| | Incorrect installation mode selection control wire | Adjust |
| | Ducts are incorrectly incompletely connected, crushed, bent or clogged. | Repair or replace |

# ON-VEHICLE SERVICE

55200880067

## POWER RELAY CHECK

(1) Remove the heater relay from the junction box.
(2) Use an ohmmeter to check for continuity between the terminals.

# HEATER CONTROL ASSEMBLY

55100110057

## REMOVAL AND INSTALLATION

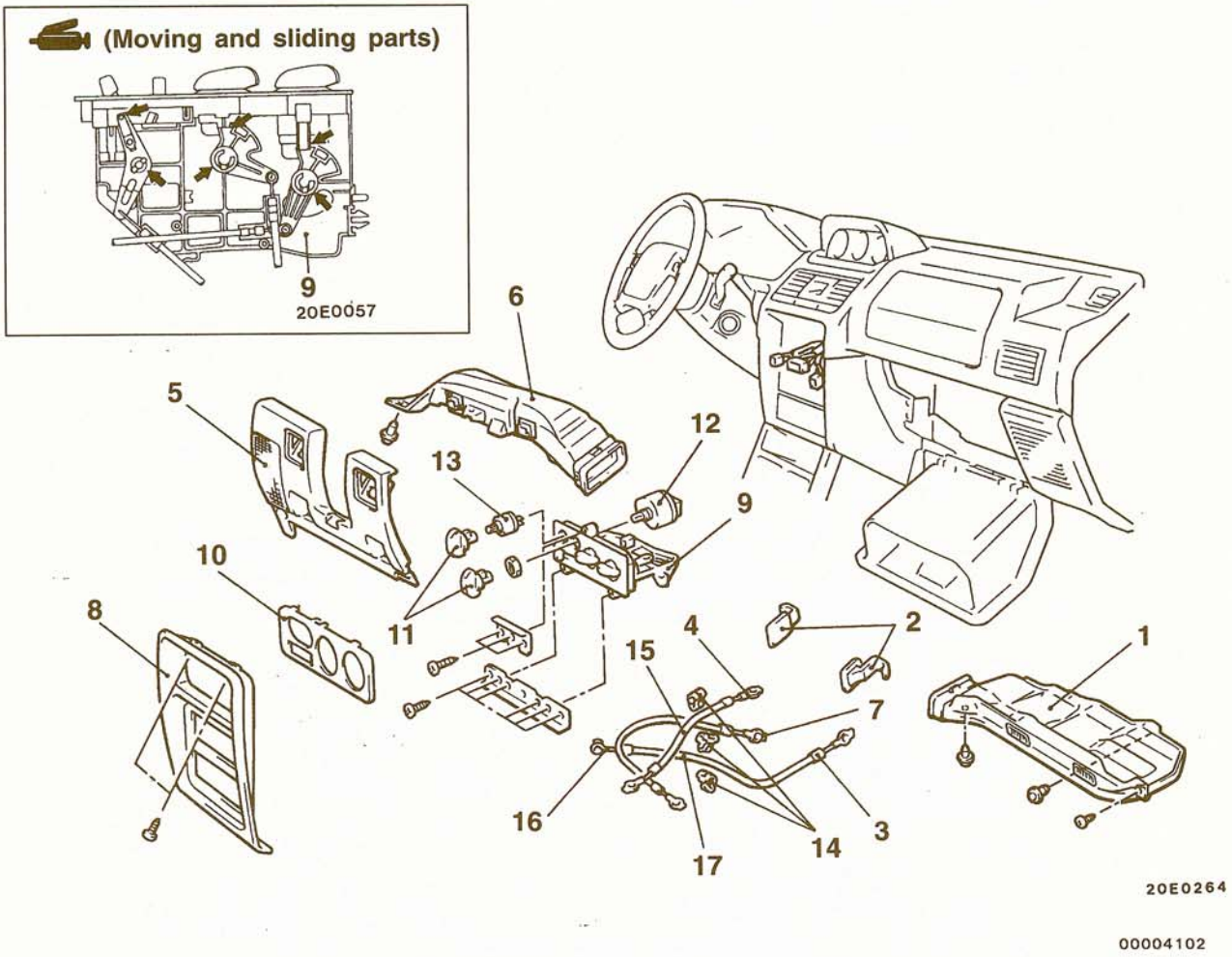


**Removal steps**

1. Foot shower duct (RH)
2. Stopper
▶D◀ 3. Air selection control wire connection
▶C◀ 4. Temperature control wire connection
5. Knee protector (Refer to GROUP 52A – Instrument Panel.)
6. Foot shower duct (LH)
▶B◀ 7. Mode selection control wire connection
8. Center panel
◀A▶ ▶A◀ 9. Heater control assembly
10. Bezel
11. Knob
12. Blower switch
13. Air conditioning switch <Vehicles with air conditioning>
◀B▶ 14. Wire clip
15. Temperature control wire
16. Mode selection control wire
17. Air selection control wire

**TSB Revision**

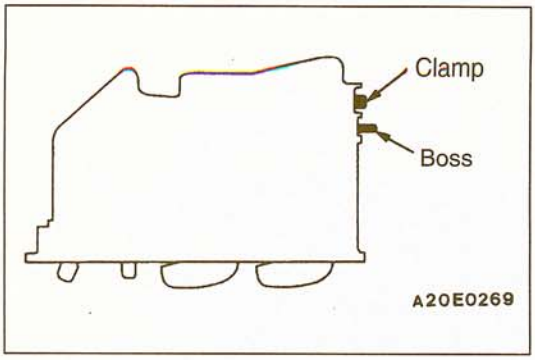


## REMOVAL SERVICE POINTS

### ◀A▶ HEATER CONTROL ASSEMBLY REMOVAL

Snap the boss and clamp with knippers or a flat-tipped screwdriver, etc to remove the heater control assembly.

NOTE
The boss and clamp are needed for assembly line at the factory, but not needed for service work.

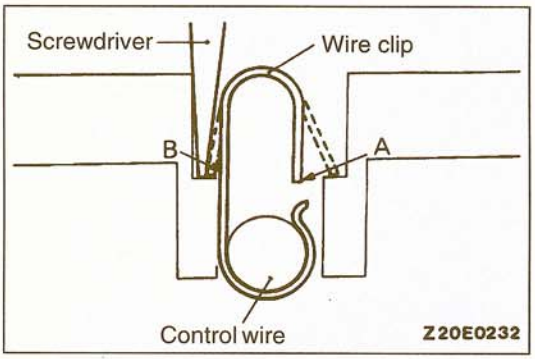


### ◀B▶ WIRE CLIP REMOVAL

Remove the wire clip by inserting a screwdriver in the position shown in the illustration and pushing the wire clip in directions A and B.

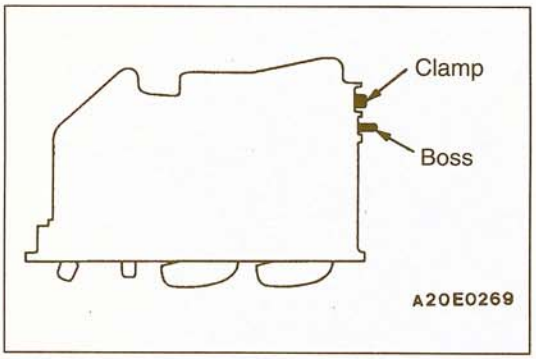


## INSTALLATION SERVICE POINTS

### ▶A◀ HEATER CONTROL ASSEMBLY INSTALLATION

Always snap the boss and clamp before installing a new heater control assembly to the instrument panel.

NOTE
The boss and clamp are needed for assembly line at the factory, but not needed for service work.

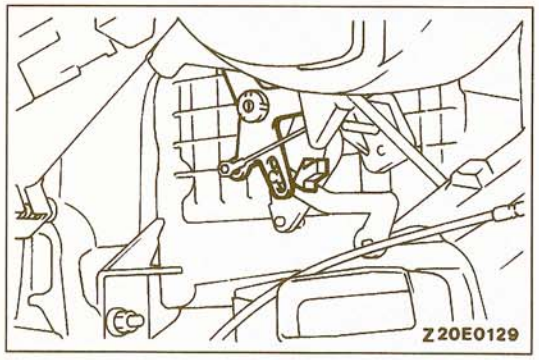


### ▶B◀ MODE SELECTION CONTROL WIRE (HEATER UNIT SIDE) INSTALLATION

Connect the mode selection control wire to the mode selection damper lever by following the steps below.

(1) Move the mode selection lever to the defroster position.
(2) With the air selection damper lever pressed inward in the direction indicated by the arrow, connect the inner cable of the mode selection control wire to the end of the mode selection lever, and then use a clip to secure the outer cable.

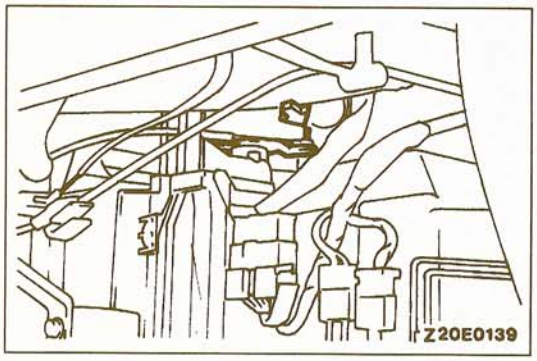


### ▶C◀ TEMPERATURE CONTROL WIRE (HEATER UNIT SIDE) INSTALLATION

Connect the temperature control wire to the blend air damper lever by following the steps below.

(1) Move the temperature control lever to the far right position (HOT position).
(2) With the blend air damper lever pressed completely downward in the direction indicated by the arrow, connect the inner cable of the temperature control wire to the end of the blend air damper lever, and then use a clip to secure the outer cable.

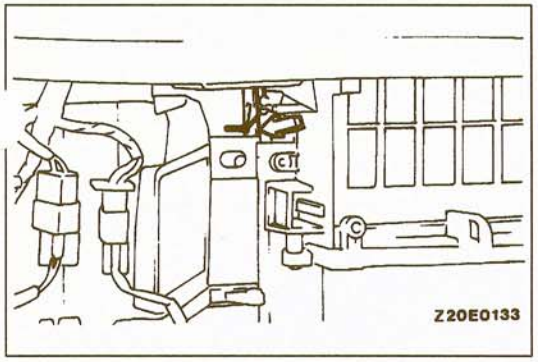


### ▶D◀ AIR SELECTION CONTROL WIRE (BLOWER CASE SIDE) INSTALLATION

Connect the air selection control wire to the air selection damper lever by following the steps below.

(1) Move the air selection control lever to the recirculation position.

(2) With the air selection damper lever pressed inward in the direction indicated by the arrow, connect the inner cable of the air selection lever, and then use a clip to secure the outer cable.

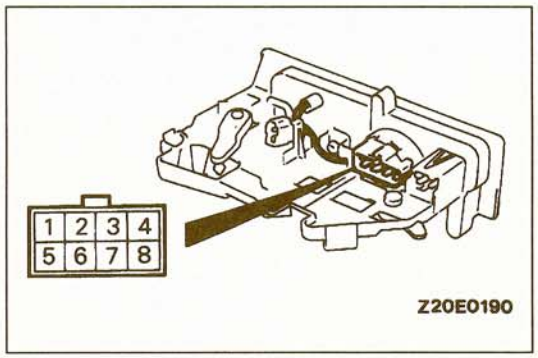


## INSPECTION

55100120012

### BLOWER SWITCH

Operate the switch and use an ohmmeter to check for continuity between the terminals.

| Switch position | Terminal No. | | | | | | | |
|---|---|---|---|---|---|---|---|---|
| | 5 | 3 | 6 | 2 | 7 | 8 | 1 | 4 |
| (LO) • | ○—○ | | | | | ○—○ | | |
| (ML) • | ○— | | —○ | | | ○—○ | | |
| (MH) ● | ○— | | — | —○ | | ○—○ | —○ | |
| (HI) ● | ○— | | — | — | —○ | ○—○ | —○ | |

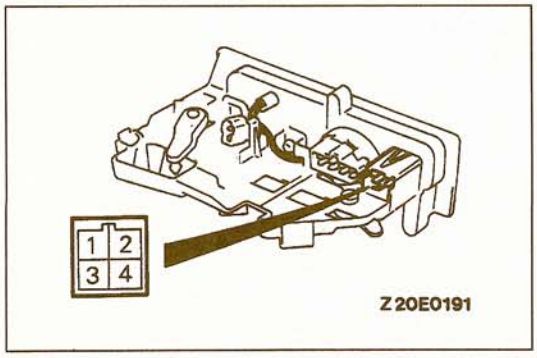


### AIR CONDITIONING SWITCH

**<Vehicles with air conditioning>**

Operate the switch and use an ohmmeter to check for continuity between the terminals.

| Switch position | Terminal No. | | |
|---|---|---|---|
| | 1 | 3 | 4 |
| ECONO | ○— | —○ | |
| A/C | ○— | —○ | —○ |

# HEATER UNIT

55100190068

## REMOVAL AND INSTALLATION

**CAUTION: SRS**
**When installing or removing the instrument panel, don't allow any impact or shock to the SRS diagnosis unit.**

**Pre-removal and Post-installation Operation**
- Coolant Draining and Supplying
- Instrument Panel Removal and Installation (Refer to GROUP 52A – Instrument Panel.)

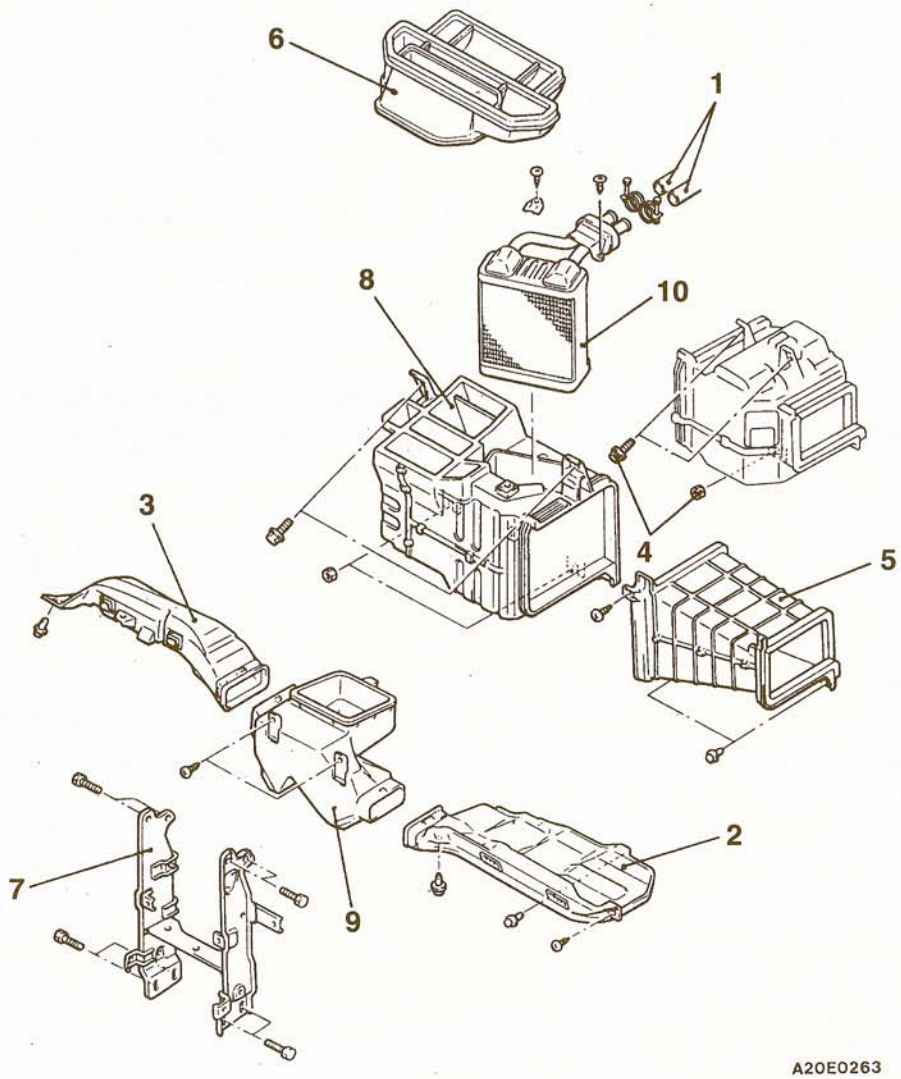


A20E0263

**Removal steps**

1. Water hoses connection
2. Foot shower duct (RH)
3. Foot shower duct (LH)
4. Evaporator mounting bolt and nut <Vehicles with A/C>
5. Joint duct <Vehicles without A/C>
6. Center duct assembly
7. Center reinforcement
8. Heater unit
9. Foot distribution duct
10. Heater core

## INSPECTION

55100200013

- Check the operation of dampers and link mechanism
- Check the heater core for clogging and water leakage.

**TSB Revision**

# BLOWER ASSEMBLY

55100280062

## REMOVAL AND INSTALLATION

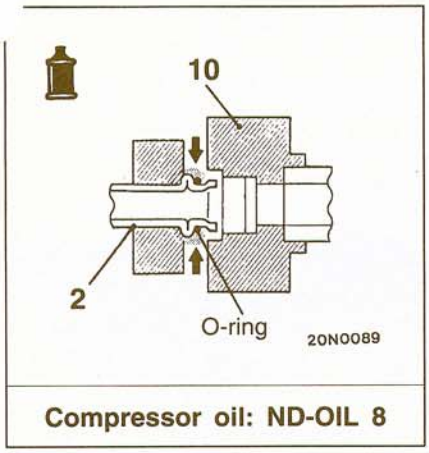


**Compressor oil: ND-OIL 8**

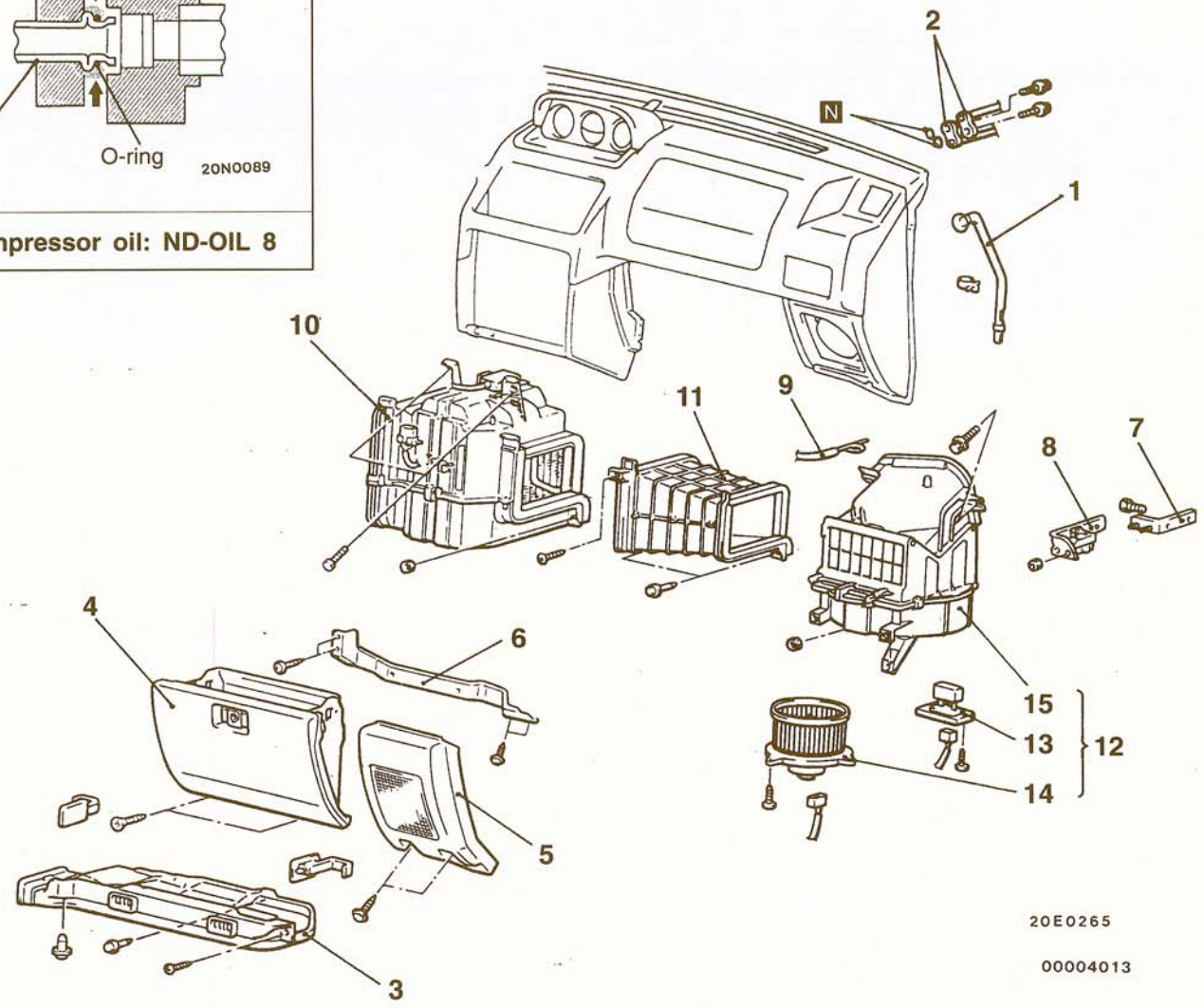


**Removal steps**

- Refrigerant Discharging and Charging (Refer to P.55-18.)

1. Drain hose <Vehicles with air conditioning>
2. Liquid pipe and suction hose connection <Vehicles with air conditioning>
3. Foot shower duct (R.H.)
4. Glove box
5. Corner cover
6. Lower frame
7. Engine control relay assembly
8. Bracket

▶A◀ 9. Air selection control wire connection

10. Evaporator <Vehicles with air conditioning>
11. Duct joint <Vehicles without air conditioning>
12. Blower assembly
13. Resistor
14. Blower motor assembly
15. Blower case assembly

**Blower motor assembly removal steps**

3. Foot shower duct (R.H.)
14. Blower motor assembly

**Resistor removal steps**

3. Foot shower duct (R.H.)
13. Resistor

**TSB Revision**

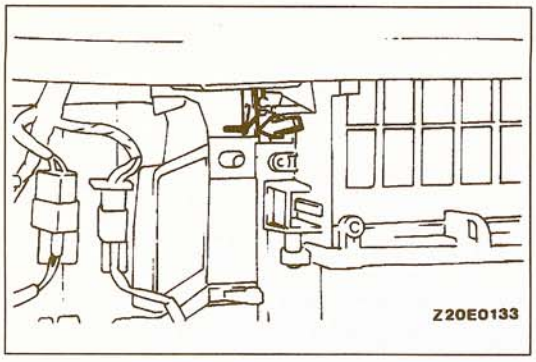


## INSTALLATION SERVICE POINT

### ▶A◀ AIR SELECTION CONTROL WIRE INSTALLATION

Connect the air selection control wire to the air selectic damper lever by following the steps below.

(1) Move the air selection control lever to the recirculation position.
(2) With the air selection damper lever pressed inward in the direction indicated by the arrow, connect the inner cable of the air selection control wire to the end of the air selection lever, and then use a clip to secure the outer cable.

## INSPECTION

55100290041

- Check for bending or abnormal deflection of the rotating shaft of the blower motor assembly.
- Check for damage to the fan.
- Check for damage to the blower case.
- Check the operation of the inside/outside air selection damper, and check for damage.

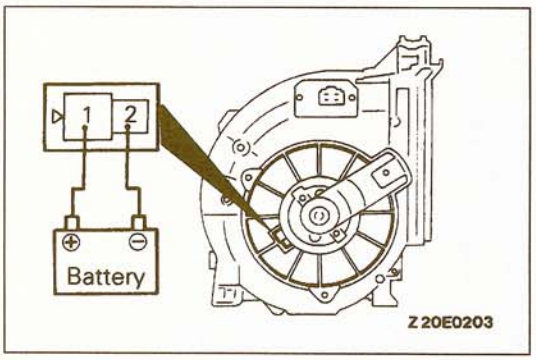


### BLOWER MOTOR ASSEMBLY

(1) Connect the blower motor terminals directly to the battery and check that the blower motor operates smoothly.
(2) Next, reverse the polarity and check that the blower motor operates smoothly in the reverse direction.

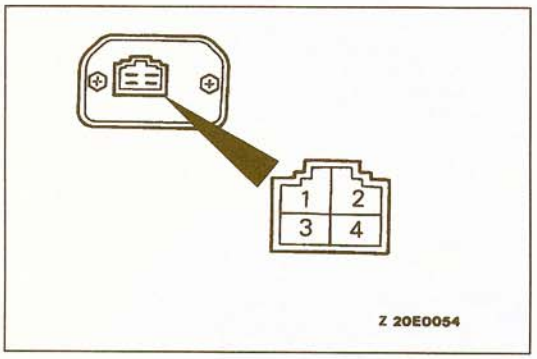


### RESISTOR

Use an ohmmeter to measure the resistance between the terminals indicated below.
The condition can be considered satisfactory if the value measured at this time is equivalent to the standard value.

**Standard value:**

| Measurement terminals | Standard value Ω |
|---|---|
| Between terminals (2)–(4) | Approx. 1.96±7% |
| Between terminals (1)–(2) | Approx. 0.95±7% |
| Between terminals (2)–(3) | Approx. 0.33±7% |

TSB Revision

# VENTILATORS (INSTRUMENT PANEL AND FLOOR)

55300160027

## REMOVAL AND INSTALLATION

**CAUTION: SRS**
**When installing or removing the instrument panel, don't allow any impact or shock to the SRS diagnosis unit.**

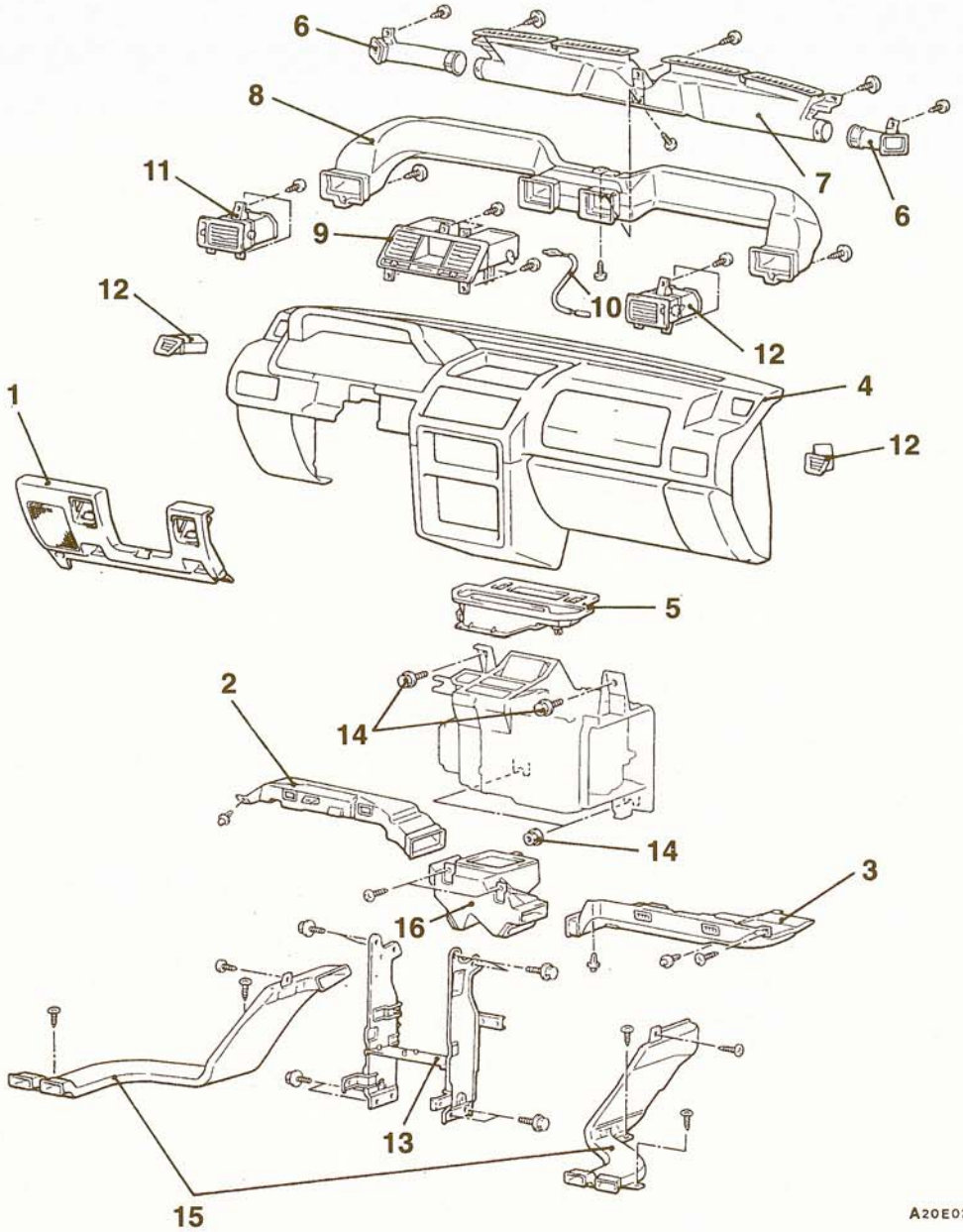


**Removal steps**

1. Knee protector (Refer to GROUP 52A – Instrument Panel.)
2. Foot shower duct (LH)
3. Foot shower duct (RH)
4. Instrument Panel (Refer to GROUP 52A – Instrument Panel.)
5. Center duct assembly
6. Side defroster duct
7. Defroster nozzle
8. Distribution duct
9. Center outlet assembly
10. Ventilation control wire
11. Side outlet assembly
12. Side defroster grille
13. Center reinforcement
14. Heater unit mounting bolts and nuts

◀A▶ ▶A◀ 15. Rear heater duct

16. Foot distribution duct

**TSB Revision**

### REMOVAL SERVICE POINT

#### ◀A▶ REAR HEATER DUCT REMOVAL

Remove the front seat, front scuff plate and cowl side trim and after taking out the floor carpet, remove the rear heater duct.

### INSTALLATION SERVICE POINT

#### ▶A◀ REAR HEATER DUCT INSTALLATION

After installing the duct, replace the floor carpet and install the front seat, front scuff plate and cowl side trim.

## VENTILATORS (AIR OUTLET)

55300250014

### REMOVAL AND INSTALLATION

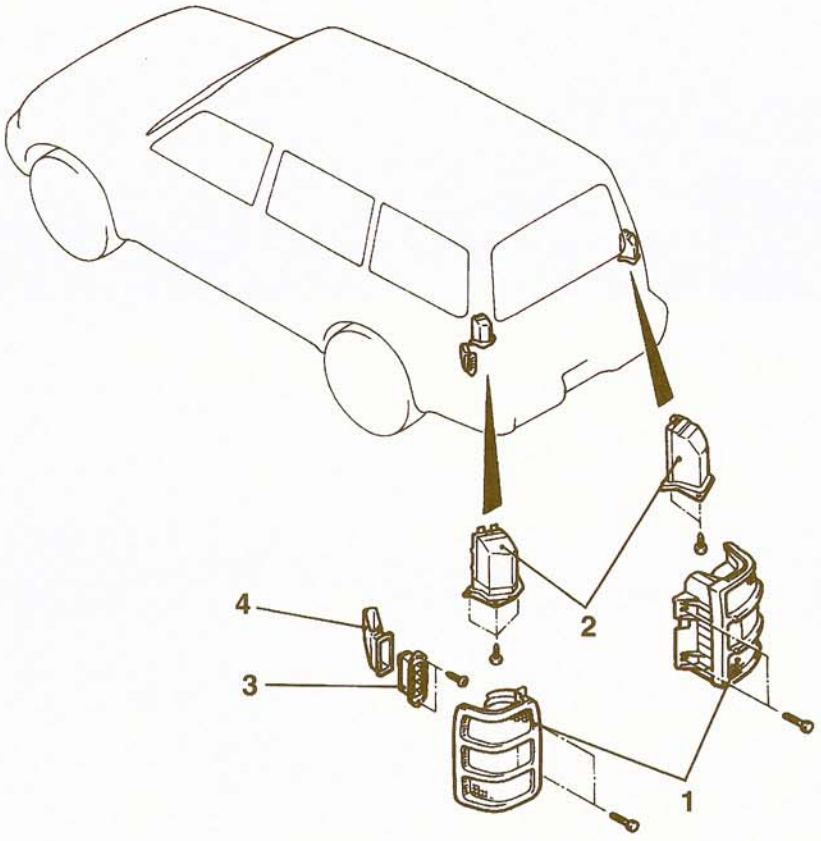


Z20E0113

**Removal steps**

1. Rear combination light (Refer to GROUP 54 – Rear Combination Light.)
2. Rear ventilator duct assembly
3. Air outlet garnish assembly
4. Air outlet duct

**TSB Revision**

# AIR CONDITIONING

55200020018

## GENERAL SPECIFICATIONS

| Items | | Specifications |
|---|---|---|
| Compressor | Model | 10PA 15 Inclined-plate type |
| | No. of cylinders and displacement $cm^3$ | 10 cylinders: 155.3 |
| | Compressor oil $cm^3$ | ND – oil 8 : 80±20 |
| | High pressure relief valve kPa (psi) | Open: 3,432–4,138 (498–600) |
| | | Close: 2,756 (400) |
| Protective equipment | Cycling clutch switch °C (°F) | OFF: 1.0 (22) |
| | | ON: 4.5 (39) |
| Dual pressure switch | Low-pressure side kPa (psi) | OFF: 196±20 (28±3) |
| | | Differential: 25 (3.6) or less |
| | High-pressure side | OFF: 3,138±196 (455±28) |
| | | ON: 2,549±196 (370±28) |
| Freezer prevention | Air thermo sensor °C (°F) | OFF: 3 (37) |
| | | ON: 4 (39) |
| | Refrigerant and quantity gr (oz.) | R-134a: 600–650 (21–23) |

## SERVICE SPECIFICATIONS

55200030066

| Items | Standard value |
|---|---|
| Idle speed r/min. | 700±100 |
| Idle-up speed r/min. | 900±100 |
| Clutch clearance mm (in.) | 0.35–0.65 (.0138–.0256) |

## LUBRICANTS

55200040069

| Items | Specified lubricants | Quantity $cm^3$ |
|---|---|---|
| Each connection of refrigerant line | ND-OIL 8 | As required |
| Compressor refrigerant unit lubricant | ND-OIL 8 | 80 |

## SEALANT

55200050017

| Items | Specified sealant and adhesive |
|---|---|
| Air conditioning engine coolant temperature switch thread part | 3M Nut Locking Part No. 4171 or equivalent |

## TROUBLESHOOTING

55200070068

Before replacing or repairing air conditioning components, first determine if the malfunction is due to the refrigerant charge, air flow or compressor. The following diagnostic charts have been developed as a quick reference for determining the cause of the malfunction. If these charts do not satisfactorily describe the problem, refer to the appropriate section for a more detailed explanation. After correcting the malfunction, check the complete system to assure that performance is satisfactory.

**MALFUNCTION CAUSES AND REMEDIES (Numbers indicate checking/inspection order.)**

| | | | |
|---|---|---|---|
| Air is emitted but is not cool. | 1. Magnetic clutch is not switched on. | 1. Check the fuse (10 A). | Replace |
| | | 2. Check the air conditioning switch. | Replace |
| | | 3. Check the dual pressure switch. | Replace |
| | | 4. Check the air inlet sensor. | Replace |
| | | 5. Check the intake air temperature sensor. | Replace |
| | | 6. Check the compressor relay. | Replace |
| | | 7. Check the magnetic clutch. | Replace |
| | | 8. Check the air conditioning control unit. | Replace |
| | 2. Insufficient refrigerant | Check the refrigerant amount. | Supply refrigerant. |
| | 3. Clogged receiver drier | Check the receiver drier. | Replace |
| | 4. Abnormal rotation of compressor | Check the drive belt tension. | Adjust the belt. |
| | 5. Poor compressor compression | Check the compressor. | Replace |
| | 6. Clogged expansion valve | | Replace |

**TSB Revision**

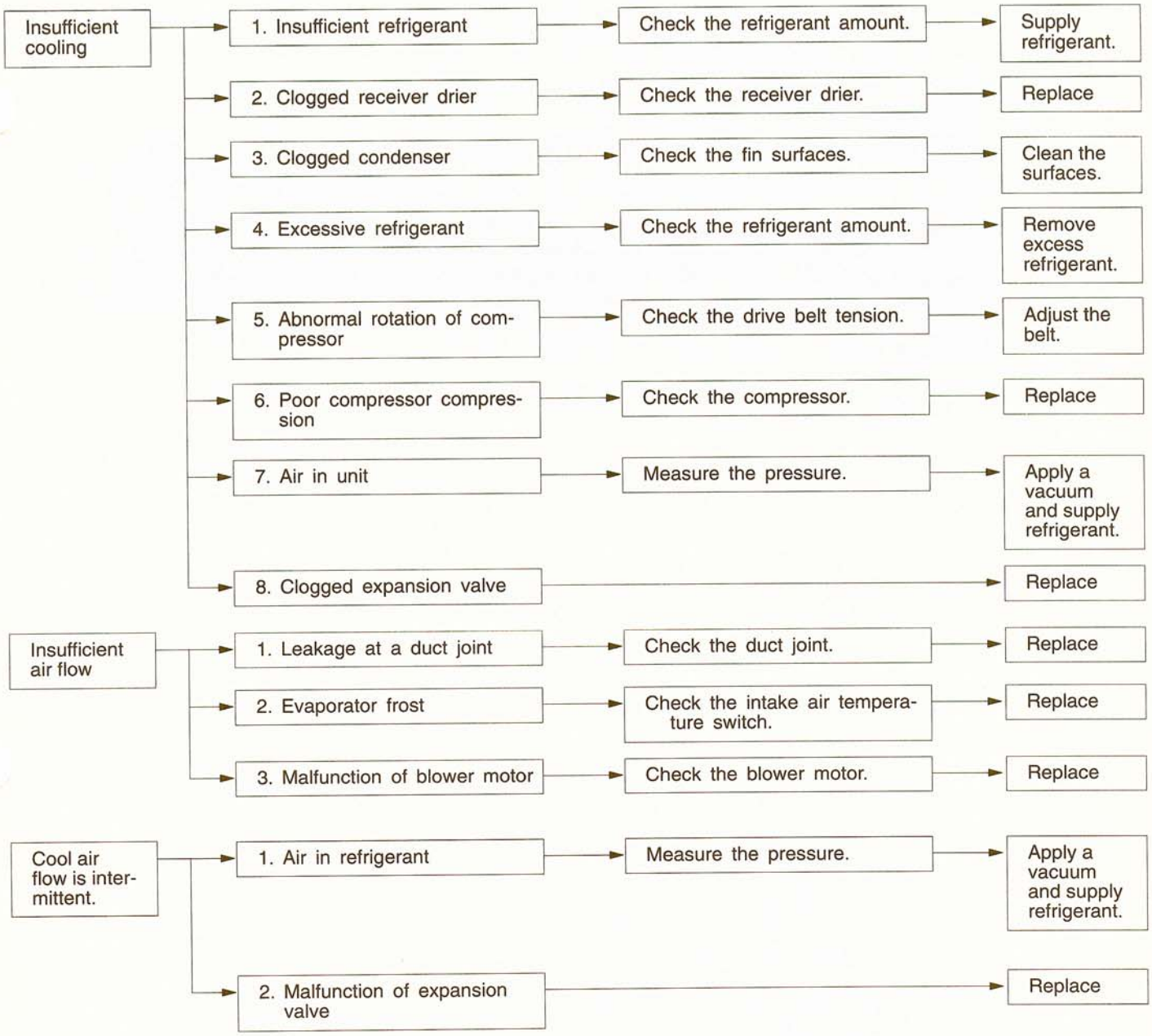
Insufficient cooling
1. Insufficient refrigerant
Check the refrigerant amount.
Supply refrigerant.
2. Clogged receiver drier
Check the receiver drier.
Replace
3. Clogged condenser
Check the fin surfaces.
Clean the surfaces.
4. Excessive refrigerant
Check the refrigerant amount.
Remove excess refrigerant.
5. Abnormal rotation of compressor
Check the drive belt tension.
Adjust the belt.
6. Poor compressor compression
Check the compressor.
Replace
7. Air in unit
Measure the pressure.
Apply a vacuum and supply refrigerant.
8. Clogged expansion valve
Replace
Insufficient air flow
1. Leakage at a duct joint
Check the duct joint.
Replace
2. Evaporator frost
Check the intake air temperature switch.
Replace
3. Malfunction of blower motor
Check the blower motor.
Replace
Cool air flow is intermittent.
1. Air in refrigerant
Measure the pressure.
Apply a vacuum and supply refrigerant.
2. Malfunction of expansion valve
Replace

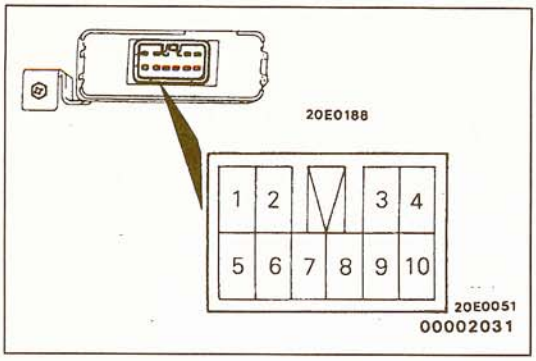


## TROUBLESHOOTING HINTS

### Air Conditioning Control Unit Inspection

Disconnect the amplifier and inspect the connector at th wire harness side as shown in the chart below.

### Test Conditions:

(1) Ignition switch: ON
(2) Air conditioning switch: ON
(3) Temperature control lever: MAX. COOL
(4) Blower switch: HI

| Terminal No. | Signal | Conditions | Terminal voltage |
|---|---|---|---|
| 1 | Air conditioning output | When all conditions for the compressor to turn on are satisfied | Battery positive voltage |
| 3 | Air conditioning switch: A/C | Air conditioning switch: A/C | Battery positive voltage |
| 4 | Air inlet sensor (+) | Ignition switch, blower switch and air conditioning switch: ON | 5.5 V |
| 5 | Air conditioning switch: ECONO or A/C | Air conditioning switch: ECONO or A/C | Battery positive voltage |
| 6 | Lever position switch | At all times | 0 V |
| 7 | Air conditioning control unit ground | At all times | 0 V |
| 8 | Intake air temperature sensor (–) | Terminals (10)–(8) [when the temperature of evaporator outlet portion is 25°C (37°F)] | 3.6 V |
| 9 | Air inlet sensor (–) | Terminals (4)–(9) [when the temperature of evaporator inlet portion is 25°C (77°F)] | 1.5 V |
| 10 | Intake air temperature sensor (+) | Ignition switch, blower switch and air conditioning switch: ON | 5.5 V |

# SAFETY PRECAUTIONS

55201080015

Because R-134a refrigerant is a hydrofluorocarbon (HFC) which contains hydrogen atoms in place of chlorine atoms, it will not cause damage to the ozone layer.
Ozone filters out harmful radiation from the sun. To assist in protecting the ozone layer, Mitsubishi Motors Sales of America recommends an R-134a refrigerant recycling device.
Refrigerant R-134a is transparent and colorless in both the liquid and vapor state. Since it has a boiling point of –29.8°C (–21.7°F), at atmospheric pressure, it will be a vapor at all normal temperatures and pressures. The vapor is heavier than air, nonflammable, and nonexplosive. The following precautions must be observed when handling R-134a.

**Caution**
**Wear safety goggles when servicing the refrigeration system.**

R-134a evaporates so rapidly at normal atmospheric pressures and temperatures that it tends to freeze anything it contacts. For this reason, extreme care must be taken to prevent any liquid refrigerant from contacting the skin and especially the eyes. Always wear safety goggles when servicing the refrigeration part of the air conditioning system. Keep a bottle of sterile mineral oil handy when working on the refrigeration system. Should any liquid refrigerant get into the eyes, use a few drops of mineral oil to wash it out. R-134a is rapidly absorbed by the oil. Next splash the eyes with plenty of cold water. Call your doctor immediately even if irritation has ceased after treatment.

**Caution**
**Do not heat R-134a above 40°C (104°F).**

In most instances, moderate heat is required to bring the pressure of the refrigerant in its container above the pressure of the system when charging or adding refrigerant.
A bucket or large pan of hot water not over 40°C (104°F) is all the heat required for this purpose. Do not heat the refrigerant container with a blow torch or any other means that could raise the temperature and pressure above this temperature. Do not weld or steam clean on or near the system components or refrigerant lines.

**Caution**
**Keep R-134a containers upright when charging the system.**

When metering R-134a into the refrigeration system, keep the supply tank or cans in an upright position. If the refrigerant container is on its side or upside down, liquid refrigerant will enter the system and damage the compressor.

**Caution**
1. **The leak detector for R-134a should be used to check for refrigerant gas leaks.**
2. **Do not allow liquid refrigerant to touch bright metal.**

Refrigerant will tarnish bright metal and chrome surfaces, and in combination with moisture can severely corrode all metal surfaces.

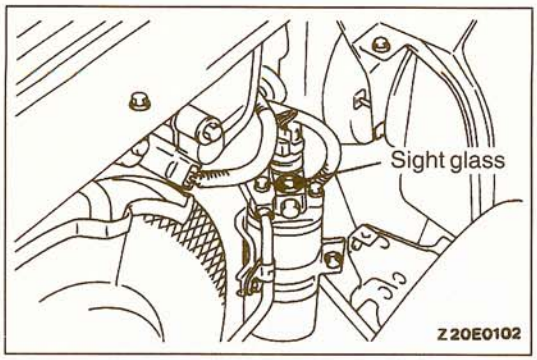


# ON-VEHICLE SERVICE

55200090019

## TEST PROCEDURES

### SIGHT GLASS REFRIGERANT LEVEL TEST

The sight glass is a refrigerant level indicator. To check the refrigerant level, clean the sight glass and start the vehicle engine. Push the air conditioning button to operate the compressor, place the blower switch to high and move the temperature control lever to max cool. After operating for a few minutes in this manner, check the sight glass.

(1) If the sight glass is clear, the magnetic clutch is engaged, the compressor discharge line is warm and the compressor inlet line is cool; the system has a full charge.
(2) If the sight glass is clear, the magnetic clutch is engaged and there is no significant temperature difference between compressor inlet and discharge lines; the system has lost some refrigerant.
(3) If the sight glass shows foam or bubbles, the system could be low on charge. The system has to be charged with some refrigerant.

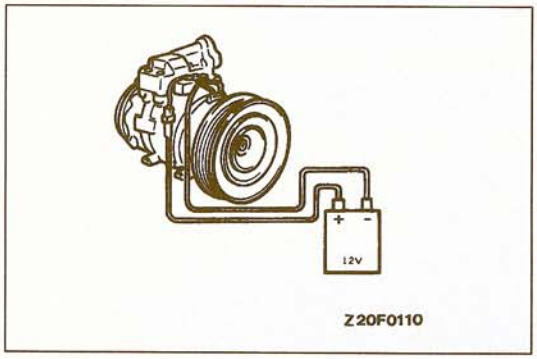


### MAGNETIC CLUTCH

(1) Disconnect the wiring to the magnetic clutch.
(2) Connect the positive battery terminal directly to the wiring for the magnetic clutch.
(3) If the magnetic clutch is normal, there will be a "click." If the pulley and armature do not make contact ("click"), there is a malfunction.

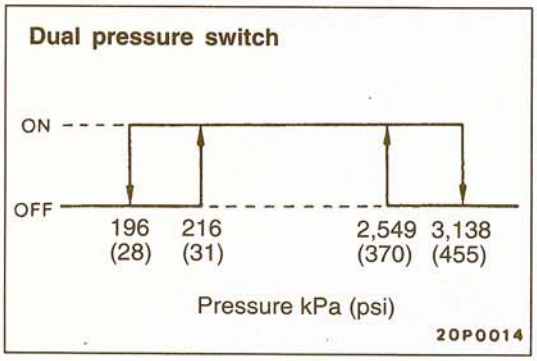


### RECEIVER DRIER

#### To Test the Receiver Drier

(1) Operate the unit and check the piping temperature by touching the receiver drier outlet and inlet.
(2) If there is a difference in the temperatures, the receiver drier is blocked. Replace the receiver drier.

### DUAL PRESSURE SWITCH (LOW PRESSURE SWITCH)

(1) Turn back the adaptor valve handle all the way and install it to the low pressure side service valve.
(2) With the gage manifold low pressure service valves closed, connect the gage manifold high pressure side charging hose to the adaptor valve.
(3) Tighten the adaptor valve handle and open the service valve.
(4) If there is continuity between the dual pressure switch terminals when the low pressure side pressure is at the level shown in the illustration at left when the dual pressure switch is on, the switch is functioning normally. If not, replace the switch.

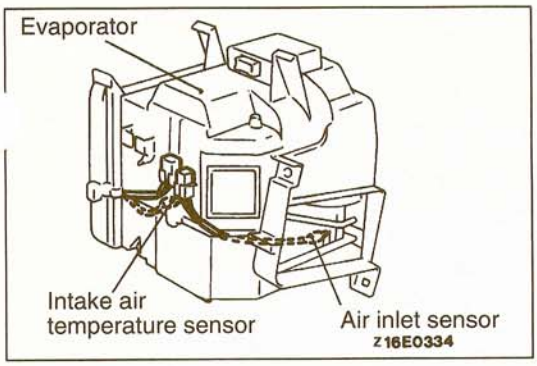


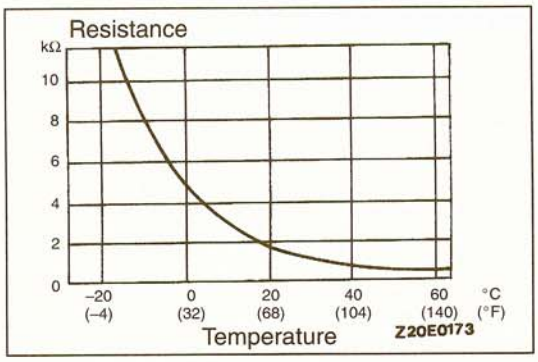


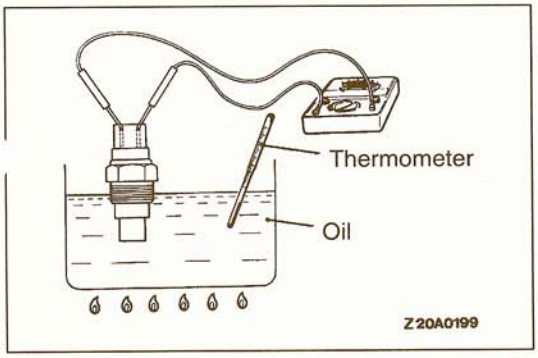


## INTAKE AIR TEMPERATURE SENSOR AND AIR INLET SENSOR

(1) Disconnect the sensors connector at the evaporator case and then use an ohmmeter to measure the resistance. If the resistance is within 10% of the value on the characteristic curve, the sensor is functioning normally.
(2) If the sensor is normal, there is a malfunction of the air conditioning control unit, and it should be replaced.

## AIR CONDITIONING ENGINE COOLANT TEMPERATURE SWITCH

(1) Dip the air conditioning engine coolant temperature switch in oil and heat the oil with a gas burner or similar item.
(2) When the oil temperature reaches the standard value, check that there is no continuity between the switch terminals.

**Standard value: 112–118°C (234–244°F)**

## COMPRESSOR DRIVE BELT ADJUSTMENT

55200100057

3.0L-12 VALVE engine:
Refer to GROUP 11A – On-vehicle Service.
3.0L-24 VALVE engine:
Refer to GROUP 11A – On-vehicle Service.
3.5L engine:
Refer to GROUP 11B – On-vehicle Service.

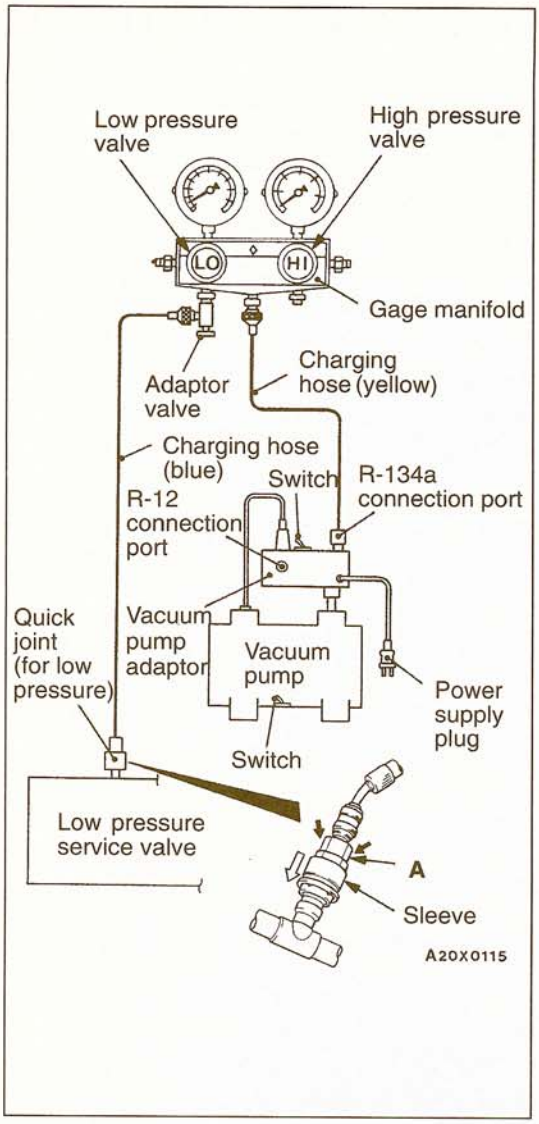


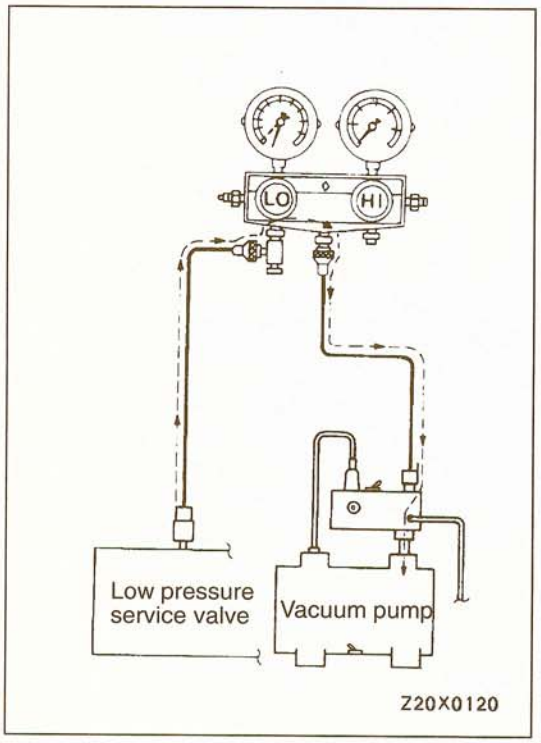


## CHARGING

55200120053

1. With the handles turned back all the way (valves closed), install the adaptor valve to the low-pressure side of the gage manifold.
2. Connect the charging hose (blue) to the adaptor valve.
3. Connect the quick joint (for low pressure) to the charging hose (blue).
4. Connect the quick joint (for low pressure) to the low pressure service valve.

   NOTE
   The low-pressure service valve should be connected to the compressor.

   **Caution**
   **1. Use tools that are designed for R-134a.**
   **2. To connect the quick joint, press section A firmly against the service valve until a click is heard. When connecting, run your hand along the hose while pressing to ensure that there are no bends in the hose.**
5. Close the high and low pressure valves of the gage manifold.
6. Install the vacuum pump adaptor to the vacuum pump.
7. Connect the vacuum pump plug to the vacuum pump adaptor.
8. Connect the charging hose (yellow) to the R-134a connection port of the vacuum pump adaptor.
9. Tighten the adaptor valve handle (valve open).
10. Open the low pressure valve of the gage manifold.
11. Turn the power switch of the vacuum pump to the ON position.

    NOTE
    Even if the vacuum pump power switch is turned on, the vacuum pump will not operate because of the power supply connection in step (7).
12. Turn the vacuum pump adaptor switch to the R-134a side to start the vacuum pump.

    **Caution**
    **Do not operate the air conditioning compressor to carry out evacuation.**
13. Evacuate to a vacuum reading of 100 kPa (29.5 in.Hg) or higher (takes approx. 10 minutes).
14. Turn the vacuum pump adaptor switch OFF and allow to stand it for 5 minutes.

    **Caution**
    **Do not operate the compressor in the vacuum condition, as damage may occur.**
15. Carry out a leak test. (Good if the negative pressure does not drop.)

    **Caution**
    **If the negative pressure is lost, check for loose connections. Then, repeat the evacuation procedure from step 12. If the negative pressure is still lost, add 1 lb of refrigerant and then use an R-134a compatible leak detector to check the system.**

TSB Revision

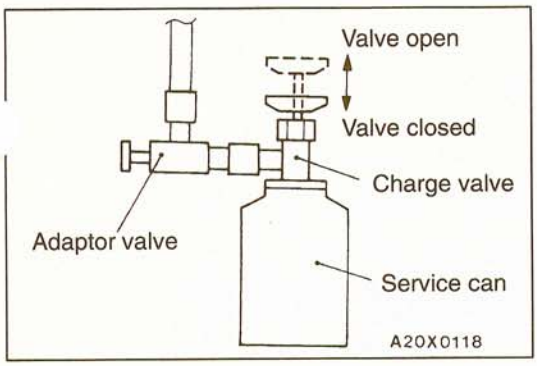


16. With the handle turned back all the way (valve open), install the charge valve to the service can.
17. Turn the handle of the adaptor valve back all the way (valve closed), remove it from the gage manifold and install the service can.
18. Tighten the handle of the charge valve (valve closed) to puncture the service can.

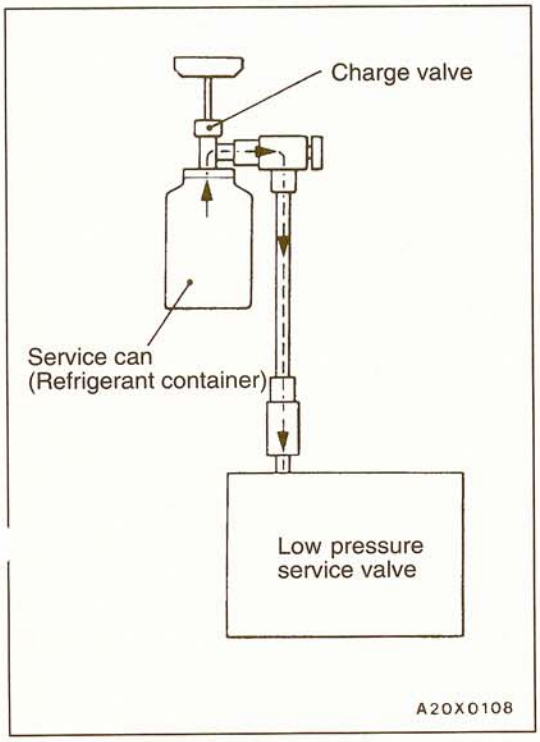


19. Turn the handle of the charge valve back (valve open) and tighten the handle of the adaptor valve (valve open) to charge the system with refrigerant.

    **Caution**
    **If the service can is inverted, liquid refrigerant may be drawn into the compressor, damaging it by liquid compression. Keep the service can upright to ensure that refrigerant is charged in gas state.**

20. If the refrigerant is not drawn in, turn the handle of the adaptor valve back all the way (valve closed).
21. use a leak detector to check for gas leaks.
    If a gas leak is detected, re-tighten the connections, and then repeat the charging procedure from evacuation in step (12).

    **Caution**
    **A leak detector designed for R-134a should be used.**

22. Start the engine.
23. Operate the air conditioning and set it to the lowest temperature (MAX. COOL).
24. Fix the engine speed at 1,500 r/min.
25. Tighten the handle of the adaptor valve (valve open) to charge the required volume of refrigerant.

    **Caution**
    **If the service can is inverted, liquid refrigerant may be drawn into the compressor, damaging it by liquid compression. Keep the service can upright to ensure that refrigerant is charged in gas state.**

26. After charging with refrigerant, turn the handle of the adaptor valve back all the way (valve closed).
27. Tighten the charge valve handle (valved closed).
    Disconnect the quick joint (for low pressure) from the low-pressure service valve.

    NOTE
    If the service can is not emptied completely, keep the handles of the charge valve and adaptor valve closed for the next charging.

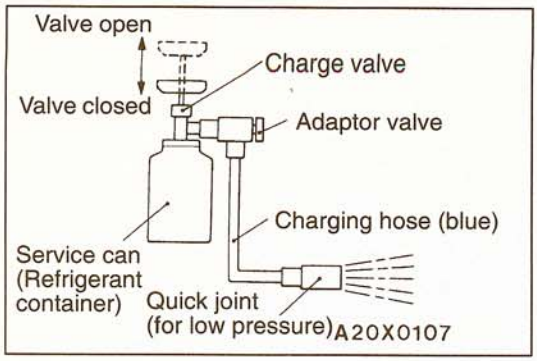


## CORRECTING LOW REFRIGERANT LEVEL WHEN THE SERVICE CAN IS USED

1. Install the charge valve with the handle turned all the way out (valve open) of the service can.
2. Install the adaptor value with the handle turned all the way back (valve closed) to the charge valve.
3. Connect the charging hose (blue) to the adaptor valve.
4. Connect the charging hose (blue) to the quick joint (for low pressure).
5. Tighten the handle of the charge valve (valve closed), and pierce the service can.
6. Turn the handle of the adaptor valve to bleed the air.

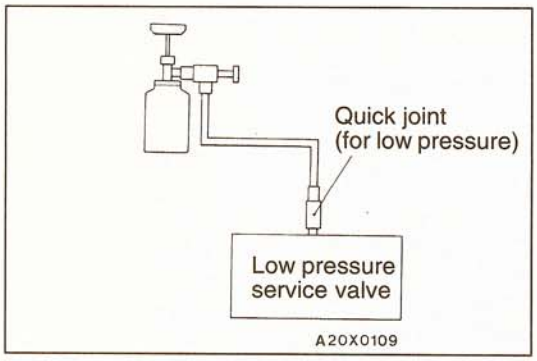


7. Connect the quick joint (for low pressure) to the low pressure service valve.

   NOTE
   The low-pressure service valve should be connected to the compressor.

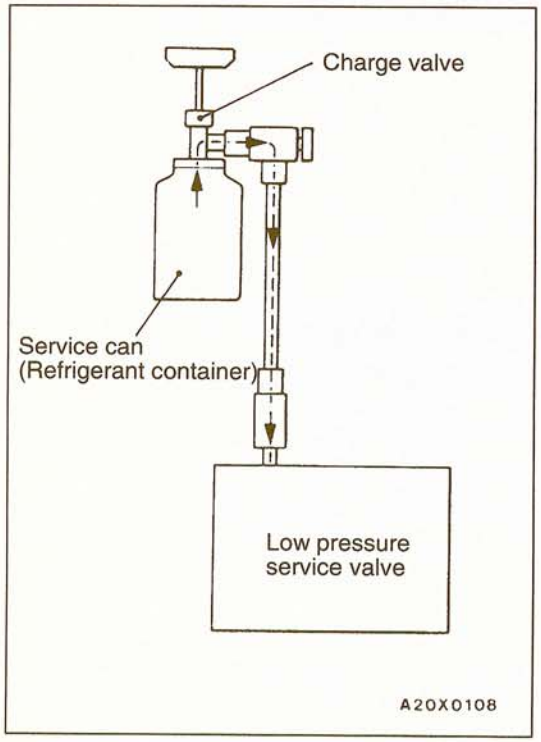


8. Start the engine.
9. Operate the air conditioning and set it to the lowest temperature (MAX. COOL).
10. Fix the engine speed at 1,500 r/min.
11. Tighten the handle of the adaptor valve (valve open), and replenish refrigerant while checking the quantity through the sight glass.

    **Caution**
    **If the service can is inverted, liquid refrigerant may be draw into the compressor, damaging it by liquid compression. Keep the service can upright to ensure that refrigerant is charged in gas state.**

12. After replenishing is completed, turn the handle of the adaptor valve all the way back (valve closed), and disconnect the quick joint.

    NOTE
    If any refrigerant is remaining in the service can, close the adaptor valve and save the refrigerant for anothe vehicle. Do not release into the atmosphere.

### METHOD USING A REFRIGERANT RECOVERY AND RECYCLING UNIT

Use the refrigerant recovery and recycling unit to refill with refrigerant.

NOTE
Refer to the refrigerant recovery and recycling unit instruction manual for operation of the unit.

### DISCHARGING THE SYSTEM

Use the refrigerant recovery unit to discharge refrigerant gas from the system.

NOTE
Refer to the refrigerant recovery and recycling unit instruction manual for operation of the unit.

### SUPPLYING OF OIL IN THE AIR CONDITIONING SYSTEM

Too little oil will provide inadequate compressor lubrication and cause a compressor failure. Too much oil will increase discharge air temperature.
When a 10PA15 compressor is installed at the factory, it contains 80 $cm^3$ (2.7 fl.oz.) of refrigerant oil. While the air conditioning system is in operation, the oil is carried through the entire system by the refrigerant.
Some of this oil will trapped and retained in various parts of the system.
When the following system components are changed, it is necessary to add oil to the system to replace the oil being removed with the component.

**Compressor oil: ND-OIL 8**

**Quantity:**
**Evaporator: 40 $cm^3$ (1.4 fl.oz.)**
**Condenser: 40 $cm^3$ (1.4 fl.oz.)**
**Suction hose: 10 $cm^3$ (.3 fl.oz.)**
**Receiver: 10 $cm^3$ (.3 fl.oz.)**

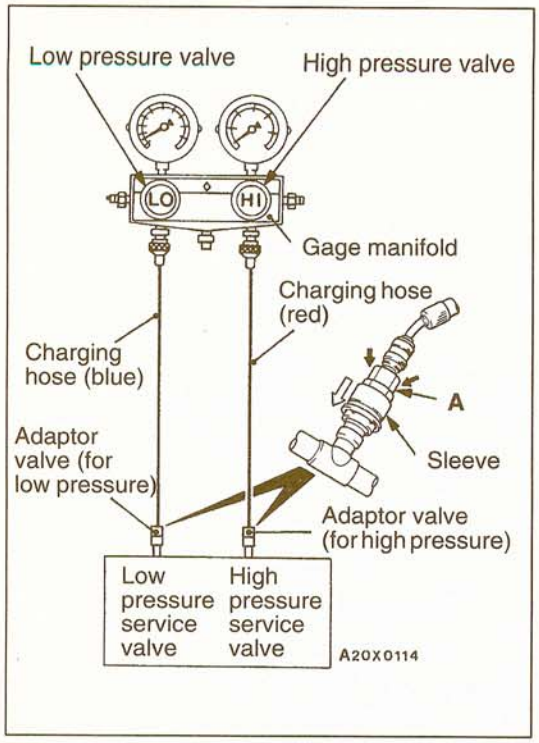


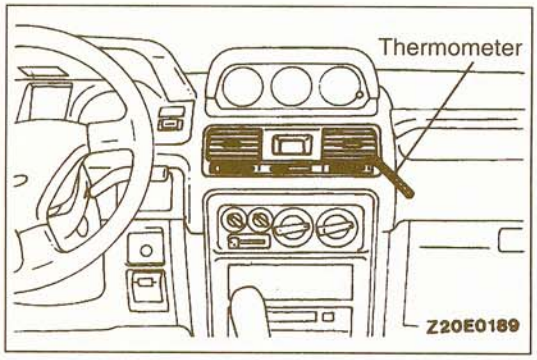


## PERFORMANCE TEST

55200140059

(1) The vehicles to be tested should be in a place that is not in direct sunlight.
(2) Close the high and low pressure valves of the gag manifold.
(3) Connect the charging hose (blue) to the low pressure valve and connect the charging hose (red) to the high pressure valve of the gage manifold.
(4) Connect the quick joint (for low pressure) to the charging hose (blue), and connect the quick joint (for high pressure) to the charging hose (red).
(5) Connect the quick joint (for low pressure) to the low-pressure service valve, and connect the quick joint (for high pressure) to the high-pressure service valve.

NOTE
The high-pressure service valve should be connected to the receiver and the low-pressure service valve should be connected to the compressor.

**Caution**
**To connect the quick joint, press section A firmly against the service valve until a click is heard. When connecting, run your hand along the hose while pressing to ensure that there are no bends in the hose.**

(6) Start the engine.
(7) Set the air conditioning controls as follows:
Air conditioning switch: A/C – ON position
Mode selection: Face position
Temperature control lever: MAX. COOL
Air selection: Recirculation position
Blower switch: HI (Fast) position
(8) Adjust the engine speed to 1,000 r/min with the air conditioning compressor clutch engaged.
(9) The engine should be warmed up with doors and windows closed.
(10) Insert a thermometer into the center air conditioning outlet and run the engine for 20 minutes.
(11) Note the discharge air temperature.

NOTE
If the clutch cycles, take the reading before the clutch disengages.

### Performance Temperature Chart

| Garage ambient temperature °C (°F) | 21 (70) | 26.7 (80) | 32.2 (90) | 37.8 (100) | 43.3 (110) |
|---|---|---|---|---|---|
| Discharge air temperature °C (°F) | 3.0–6.0 (37.4–42.8) | 3.0–7.0 (37.4–44.4) | 3.5–7.5 (38.3–45.5) | 4.0–8.0 (39.2–46.4) | 4.5–8.5 (40.1–47.3) |
| Compressor discharge pressure kPa (psi) | 961–1,402 (139–203) | 1,029–1,471 (149–213) | 1,108–1,549 (161–225) | 1,245–1,745 (181–253) | 1,304–1,902 (189–276) |
| Compressor suction pressure kPa (psi) | 98–216 (14–31) | 98–226 (14–33) | 108–235 (16–34) | 137–265 (20–38) | 157–275 (23–40) |

TSB Revision

## REFRIGERANT LEAK REPAIR PROCEDURE

55200150052

### Lost Charge

If the system has lost all charge due to a leak:
(1) Evacuate the system. (Refer to the evacuation procedure.)
(2) Charge the system with approximately one pound of refrigerant.
(3) Check for leaks.
(4) Discharge the system.
(5) Repair the leaks.
(6) Replace the receiver drier.

**Caution**
**Replacement filter-drier units must be sealed while in storage. The drier used in these units will saturate water quickly upon exposure to the atmosphere. When installing a drier, have all tools and supplies ready for quick reassembly to avoid keeping the system open any longer than necessary.**

(7) Evacuate and charge the system.

### Low Charge

If the system has not lost all of its refrigerant charge, locate and repair all leaks. If it is necessary to increase the system pressure to find the leak (because of an especially low charge), add refrigerant. If it is possible to repair the leak without discharging the refrigerant system, use the procedure for correcting the low refrigerant level.

## HANDLING TUBING AND FITTINGS

Kinks in the refrigerant tubing or sharp bends in the refrigerant hose lines will greatly reduce the capacity of the entire system. High pressures are produced in the system when it is operating. Extreme care must be exercised to make sure that all connections are pressure tight. Dirt and moisture can enter the system when it is opened for repair or replacement of lines or components. The following precautions must be observed. The system must be completely discharged before opening any fitting of connection in the refrigeration system. Open fittings with caution even after the system has been discharged. If any pressure is noticed as a fitting is loosened, allow trapped pressure to bleed off very slowly.
Never attempt to re-bend formed lines to fit. Use the correct line for the installation you are servicing. A good rule for the flexible hose lines is keep the radius of all bends at least 10 times the diameter of the hose. Sharper bends will reduce the flow of refrigerant. The flexible hose lines should be routed so that they are at least 80 mm (3 in.) from the exhaust manifold. It is good practice to inspect all flexible hose lines at least once a year to make sure they are in good condition and properly routed. Use the same type of O-rings in all plumbing connections. These O-rings are not reusable.

## COMPRESSOR NOISE

55200870040

When investigating an air conditioning related noise, you must first know the conditions when the noise occurs. These conditions are weather, vehicle speed, in gear or in neutra engine temperature or any other special conditions. Noises that develop during air conditioning operation can often be misleading. For example: what sounds like a failed front bearing or connecting rod may be caused by loose bolts, nuts, mounting brackets or a loose clutch assembly. Check the accessory drive belt tension (power steering, generator or air pump). Improper accessory drive belt tension can cause a misleading noise when the compressor is engaged and little or no noise when the compressor is disengaged. Drive belts are speed sensitive. That is, at different engine speeds and depending upon belt tension, belts can develop unusual noises that are often mistaken for mechanical problems inside the compressor.

### Adjustment Procedures

(1) Select a quiet area for testing. Duplicate conditions as much as possible. Switch the compressor on and off several times to clearly identify the compressor noise.

**To duplicate high ambient conditions (high head pressure), restrict air-flow through condenser. Install manifold gage set to make sure discharge pressure does not exceed 2,070 kPa (300 psi).**

(2) Tighten all compressor mounting bolts, clutch mounting bolt, and compressor drive belt. Check to assure clutch coil is tight (no rotation or wobble).
(3) Check the refrigerant hoses for rubbing or interference that could cause abnormal noise.
(4) Check the refrigerant amount. (Refer to "Charging the System.")
(5) Recheck the compressor noise by the same procedure as given in step 1.
(6) If noise still exists, loosen the compressor mounting bolts and re-tighten to the specified torque. Repeat step 1.
(7) If noise continues, replace the compressor and repeat step 1.

## POWER RELAY CHECK

55200880074

(1) Remove the condenser fan motor relay and compressor relay from the relay box at the left of the engine compartment.
(2) Use an ohmmeter to check for continuity between the terminals.

## IDLE-UP OPERATION CHECK

55200160079

(1) Before inspection, set the vehicle to the following condition:
- Engine coolant temperature: 80–90°C (176–194°F)
- Lights and all accessories: OFF
- Transmission: Neutral (N or P for vehicles with A/T)
- Steering wheel: Straight forward position

(2) Check that the idling speed is at the standard value.

**Standard value: 700±100 r/min.**

NOTE
There is no necessity to make an adjustment, because the idling speed is automatically adjusted by the idle air control (IAC) system. If, however, there occurs a deviation from the standard value for some reason, check the Idle Air Control (IAC) system.

(3) Check that the idling speed becomes the standard value when the air conditioning switch is switched on and the air conditioning is activated.

**Standard value: 900±100 r/min.**

NOTE
There is no necessity to make an adjustment, because the idling speed is automatically adjusted by the Idle Air Control (IAC) system. If however, there occurs a deviation from the standard value for some reason, check the Idle Air Control (IAC) system.

## AIR CONDITIONING SWITCH

55200200016

Refer to Heater Control Assembly for the removal, installation and inspection procedures for the air conditioning switch.

# EVAPORATOR

55200360066

## REMOVAL AND INSTALLATION

**Pre-removal and Post-installation Operations**
- Refrigerant Discharging and Charging (Refer to P.55-18.)

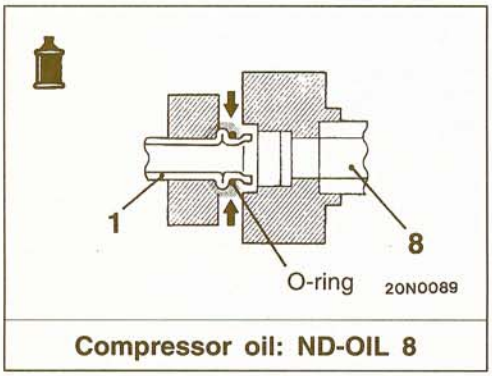


**Compressor oil: ND-OIL 8**




**Removal steps**
1. High pressure pipe/low pressure hose connection
2. Drain hose
3. Foot shower duct (R.H.)
4. Stopper
5. Glove box
6. Corner cover
7. Lower frame
8. Air conditioning wiring harness
▶A◀ 9. Front evaporator
10. Air conditioning control unit

## INSTALLATION SERVICE POINT

### ▶A◀ EVAPORATOR INSTALLATION

When replacing the evaporator with new one, refill the evaporator with a specified amount of compressor oil and install it to the vehicle.

**Compressor oil: ND-OIL 8**

**Quantity: 40 $cm^3$ (1.4 fl.oz.)**

**TSB Revision**

## INSPECTION

55200370014

- Check for damage to the evaporator fin part.
- Check for damage or collapse of the drain hose.
- Check for peeling or cracking of the insulator.

## DISASSEMBLY AND REASSEMBLY

55200380062

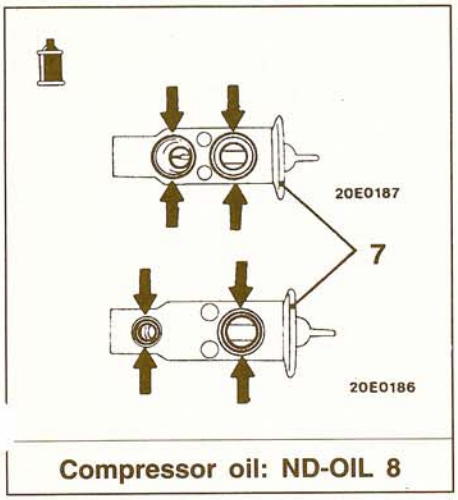


Compressor oil: ND-OIL 8

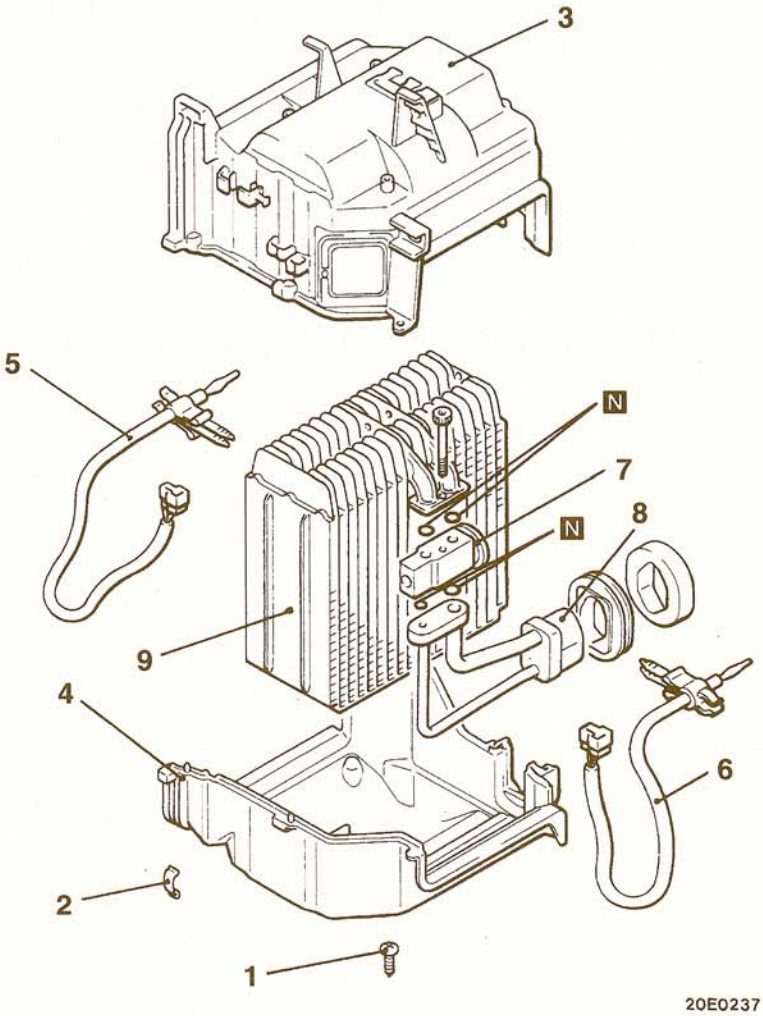


20E0237

00002035

**Disassembly steps**

◀A▶

1. Screw
2. Clip
3. Evaporator case (upper)
4. Evaporator case (lower)
5. Air thermo sensor
6. Air inlet sensor
7. Expansion valve
8. Low pressure/high pressure pipe
9. Evaporator

TSB Revision

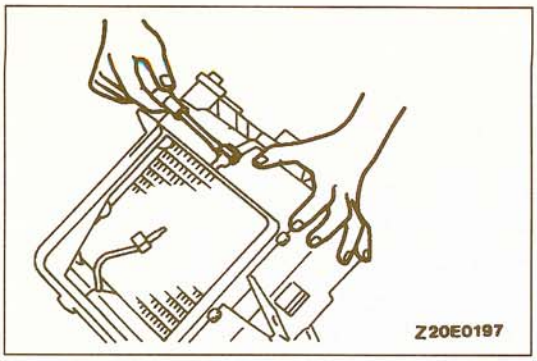


## DISASSEMBLY SERVICE POINT

### ◀A▶ CLIPS REMOVAL

Remove the clips with a flat-tip screwdriver covered with shop towel to prevent damage to case surfaces.

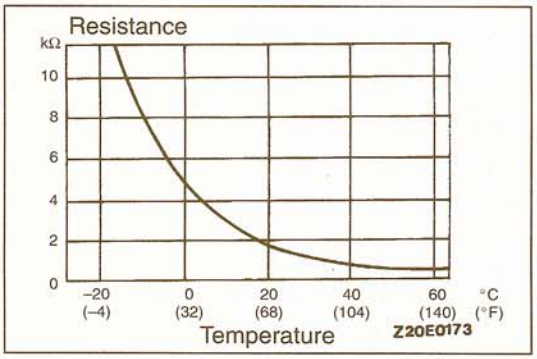


## INSPECTION

55200390027

### INTAKE AIR TEMPERATURE SENSOR AND AIR INLET SENSOR

When the resistance value between the sensor terminals is measured under two or more temperature conditions, the resistance value should be close to the values shown in the graph.

NOTE
The temperature conditions when testing should not exceed the range of the characteristic curve in the graph.

# AIR CONDITIONING CONTROL UNIT

55200270017

## REMOVAL AND INSTALLATION

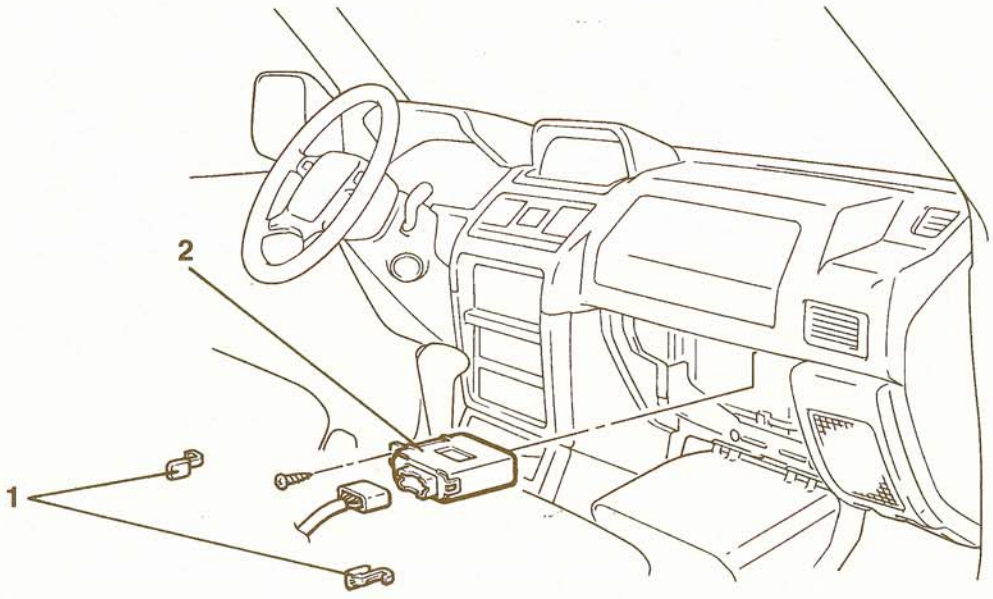


**Removal steps**

1. Stopper
2. Air conditioning control unit

TSB Revision

# CONDENSER AND CONDENSER FAN MOTOR

55200670060

## REMOVAL AND INSTALLATION

**Pre-removal and Post-installation Operation**
- Refrigerant Discharging and Charging (Refer to P.55-18.)
- Radiator Grille Removal and Installation

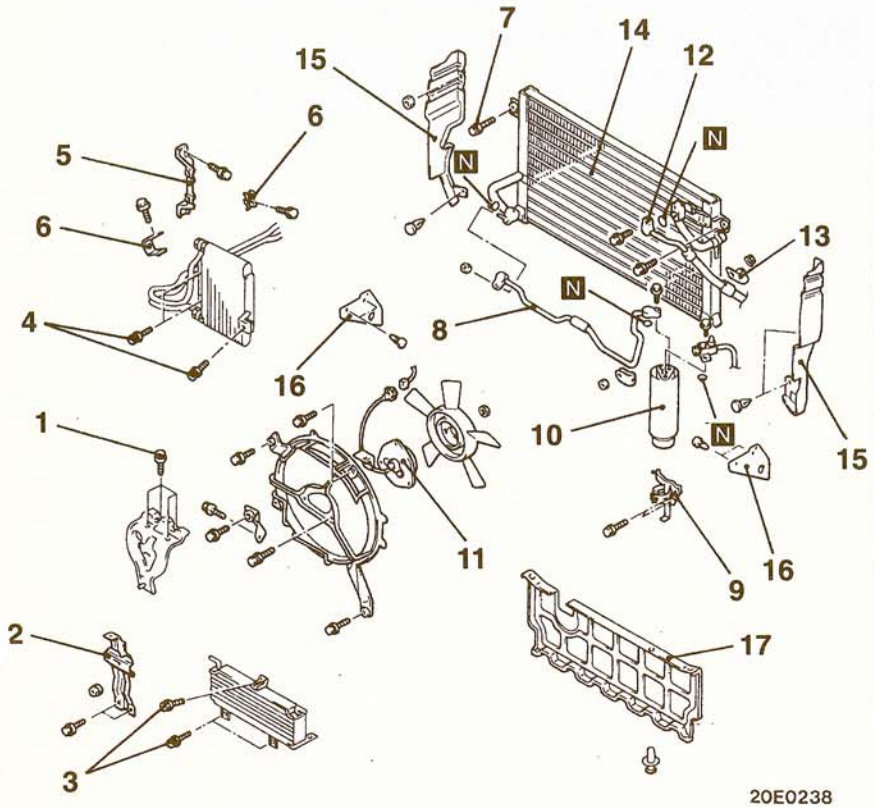


20E0238

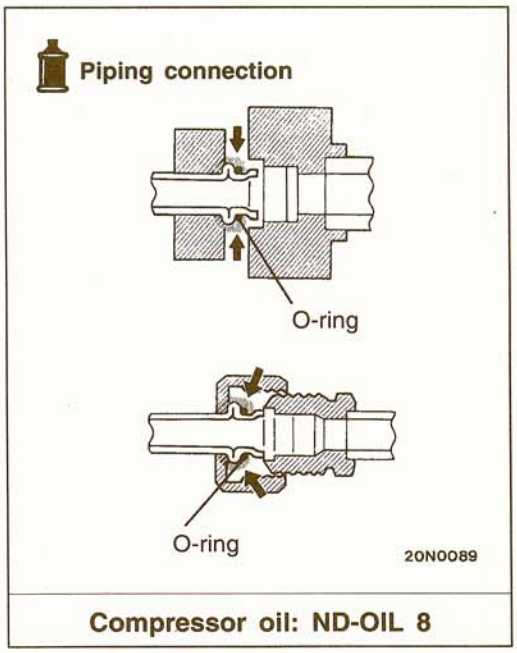


**Compressor oil: ND-OIL 8**

00002037

**Removal steps**

1. Hood latch bracket assembly mounting bolt
2. Hood latch stay
3. Transmission oil cooler mounting bolt <A/T>
4. Engine oil cooler mounting bolt
5. Engine oil cooler bracket
6. Bracket
7. Condenser mounting bolt
8. High pressure pipe A
9. Receiver bracket
10. Receiver
11. Condenser fan motor
12. High pressure hose connection
13. High pressure hose bracket
- ▶A◀ 14. Condenser
15. Headlight side seal
16. Frame side seal
17. Under seal

## INSTALLATION SERVICE POINT

### ▶A◀ CONDENSER INSTALLATION

When replacing the condenser with a new one, refill the condenser with a specified amount of compressor oil and install it (to the vehicle).

**Compressor oil: ND-OIL 8**

**Quantity: 40 cm$^3$ (1.4 fl.oz.)**

**TSB Revision**

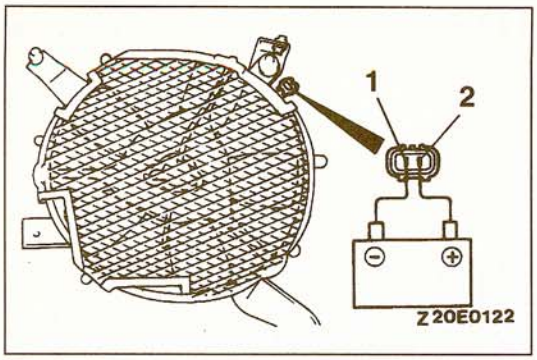


## INSPECTION

55200680049

- Check the condenser fan for crushing or other damage.
- Check the condenser's high-pressure hose and pipe installation parts for damage or deformation.
- Check the condenser fan shroud for damage.

### INSPECTION OF CONDENSER FAN MOTOR

When battery voltage is applied to the terminal (2) and terminal (1) is earthed, check that the condenser fan motor turns.

# REFRIGERANT LINE

55200640078

## REMOVAL AND INSTALLATION

**Pre-removal and Post-installation Operation**
- Refrigerant Discharging and Charging (Refer to P.55-18.)

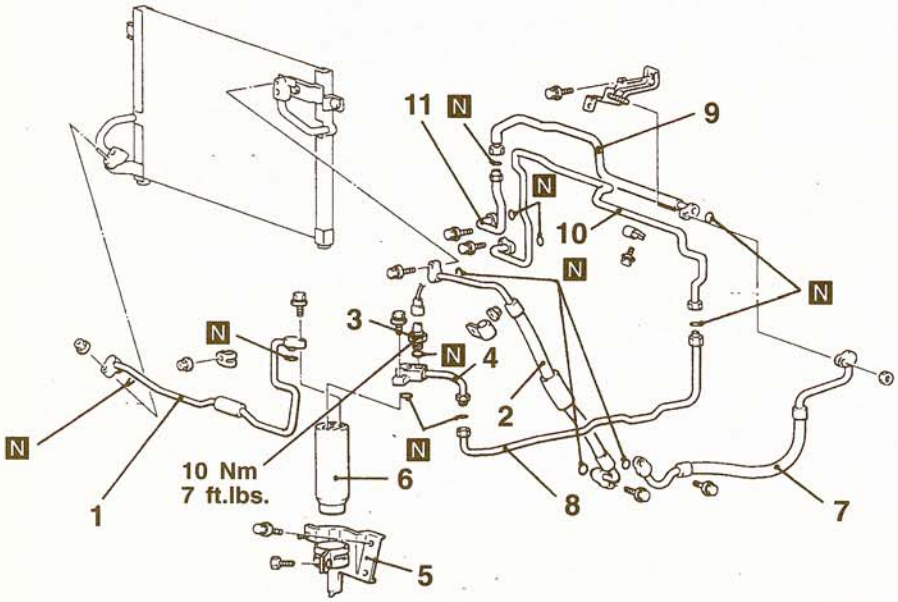


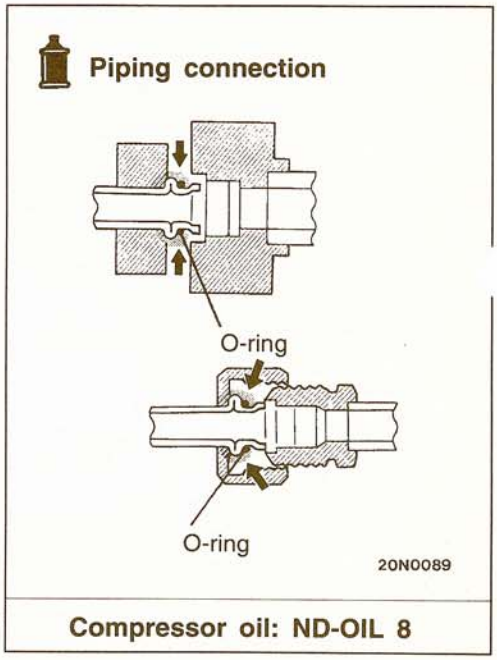


**Compressor oil: ND-OIL 8**

00002038

**Removal steps**

1. High pressure pipe A
2. High pressure hose
3. Dual pressure switch
4. High pressure pipe B
5. Receiver bracket
▶A◀ 6. Receiver
▶A◀ 7. Suction hose
8. High pressure pipe C
- Link bracket <Vehicle with auto-cruise control> (Refer to GROUP 17 – Auto-cruise Control.)

9. Suction pipe A
10. High pressure pipe D
11. Suction pipe B

**TSB Revision**

## INSTALLATION SERVICE POINT

### ▶A◀ SUCTION HOSE/RECEIVER INSTALLATION

When replacing the suction hose or the receiver with new ones, refill them with a specified amount of compressor oil, and then install each of them.

**Compressor oil: ND-OIL 8**

**Quantity:**
**Suction hose: 10 $cm^3$ (.3 fl.oz.)**
**Receiver: 10 $cm^3$ (.3 fl.oz.)**

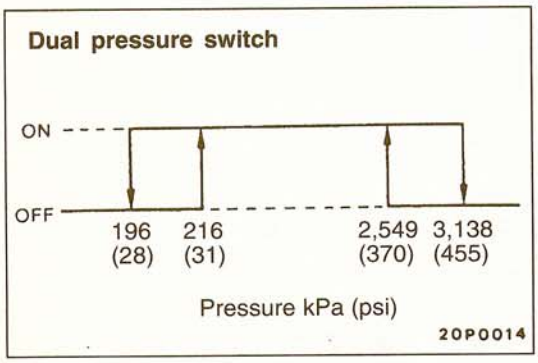


## INSPECTION

55200650019

### DUAL PRESSURE SWITCH (LOW PRESSURE SWITCH)

(1) Turn back the adaptor valve handle all the way and install it to the low pressure side service valve.
(2) With the gage manifold low pressure service valves closed, connect the gage manifold high pressure side charging hose to the adaptor valve.
(3) Tighten the adaptor valve handle and open the service valve.
(4) If there is continuity between the dual pressure switch terminals when the low pressure side pressure is at the level shown in the illustration at left when the dual pressure switch is on, the switch is functioning normally. If not, replace the switch.

# COMPRESSOR AND TENSION PULLEY

55200410082

## REMOVAL AND INSTALLATION

**Pre-removal and Post-installation Operation**
- Battery and Battery Tray Removal and Installation
- Radiator Shroud Cover Removal and Installation

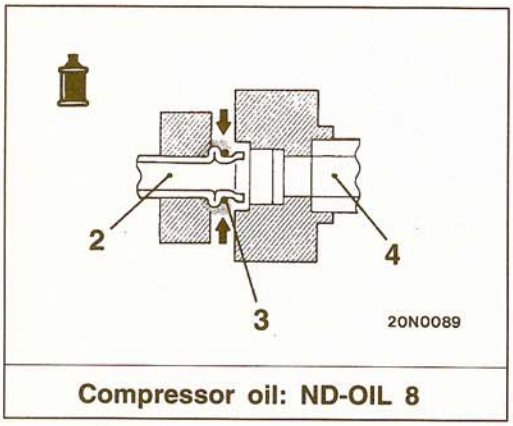


**Compressor oil: ND-OIL 8**

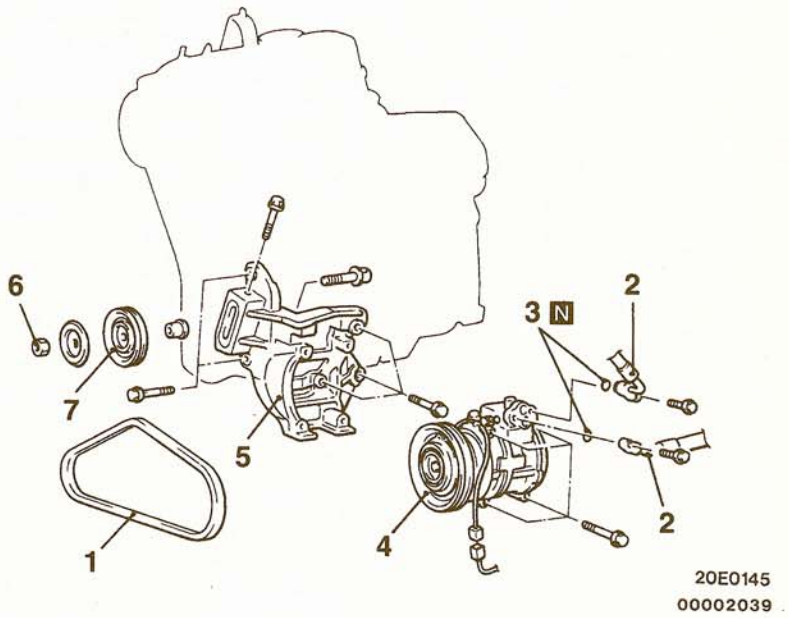


**Compressor removal steps**
- Refrigerant Discharging and Charging (Refer to P.55-18.)
- Compressor Drive Belt Adjustment (3.0L-12 VALVE engine: Refer to GROUP 11A – On-vehicle Service.) (3.0L-24 VALVE engine: Refer to GROUP 11A – On-vehicle Service.) (3.5L engine: Refer to GROUP 11B – On-vehicle Service.)

1. Compressor drive belt
2. High-pressure hose connection
3. O-ring

▶A◀ 4. Compressor

5. Compressor bracket

**Tension pulley removal steps**
- Compressor Drive Belt Adjustment (3.0L-12 VALVE engine: Refer to GROUP 11A – On-vehicle Service.) (3.0L-24 VALVE engine: Refer to GROUP 11A – On-vehicle Service.) (3.5L engine: Refer to GROUP 11B – On-vehicle Service.)

1. Compressor drive belt
6. Tension pulley mounting nut
7. Tension pulley

**TSB Revision**

## INSTALLATION SERVICE POINT

### ▶A◀ COMPRESSOR INSTALLATION

If a new compressor is installed, first adjust the amount of oil according to the procedures described below, and then install the compressor.

(1) Measure the amount (X $cm^3$) of oil inside the removed compressor.

(2) Drain the amount of oil calculated according to the following formula from the new compressor, and then install the new compressor.
New compressor oil amount: 80 $cm^3$ – X $cm^3$ = Y $cm^3$

NOTE
(1) Y $cm^3$ indicates the amount of oil in the refrigerant line, the condenser, the cooling unit, etc.
(2) When replacing the following parts at the same time as the compressor, subtract the rated oil amount of each part from Y $cm^3$ and discharge this amount from the new compressor.

**Compressor oil: ND-OIL 8**

**Quantity:**
**Evaporator: 40 $cm^3$ (1.4 fl.oz.)**
**Condenser: 40 $cm^3$ (1.4 fl.oz.)**
**Suction hose: 10 $cm^3$ (.3 fl.oz.)**
**Receiver: 10 $cm^3$ (.3 fl.oz.)**

## DISASSEMBLY AND REASSEMBLY

55200460063

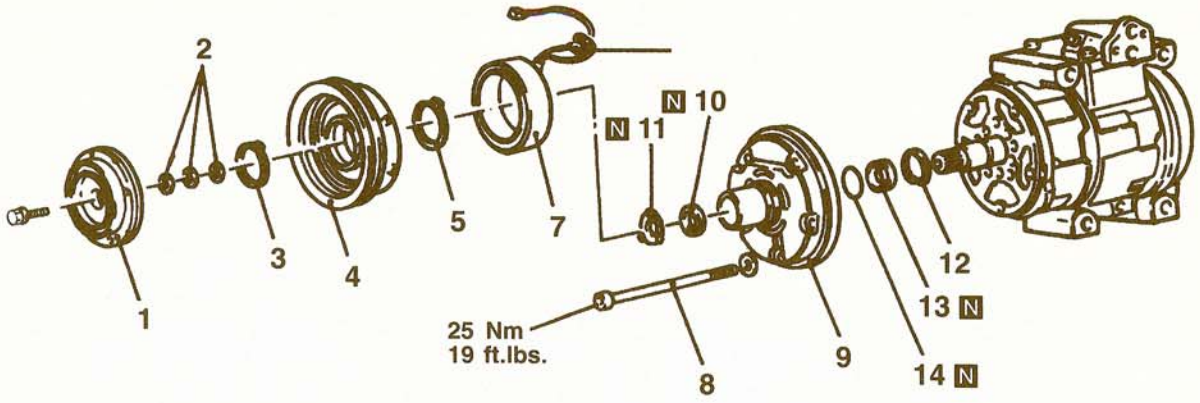


Z20W856

**Magnetic clutch disassembly steps**

- ▶D◀ • Clutch clearance adjustment
- ◀A▶ 1. Clutch hub
- 2. Shims
- 3. Snap ring
- ◀B▶ 4. Rotor assembly
- 5. Snap ring
- 6. Ground terminal
- ▶C◀ 7. Clutch coil

**Compressor front housing and shaft seal disassembly steps**

- ◀C▶ 8. Through bolt
- ▶B◀ 9. Front housing
- ◀D▶ 10. Felt
- 11. Felt holder
- 12. Snap ring
- ◀E▶ ▶A◀ 13. Shaft seal
- 14. O-ring

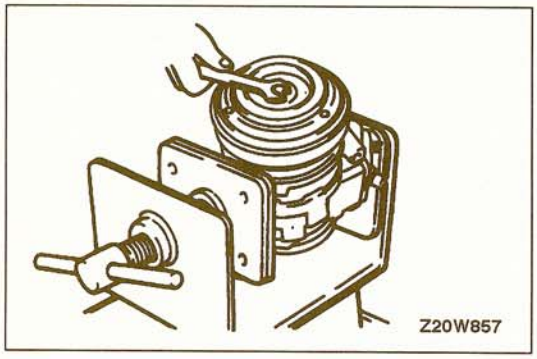

Z20W857

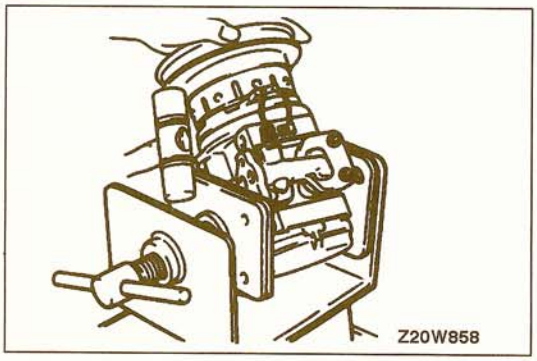

Z20W858

## DISASSEMBLY SERVICE POINTS

### ◀A▶ CLUTCH HUB REMOVAL

(1) Secure the compressor in a vise.
(2) If the clutch hub cannot be pulled off by hand, screw in a completely-threaded bolt with a thread length of 8 mm (.315 in.) to raise the clutch hub so it can be removed.

### ◀B▶ ROTOR ASSEMBLY REMOVAL

Use a plastic hammer to lightly tap the rotor off the shaft.

### ◀C▶ THROUGH BOLT REMOVAL

Remove the through bolt after first securing the rear housing of the compressor by placing it in a vise.

**Caution**
**If the through bolt is removed without first doing so, the rear housing will become uncoupled and compressor oil will escape.**

TSB Revision

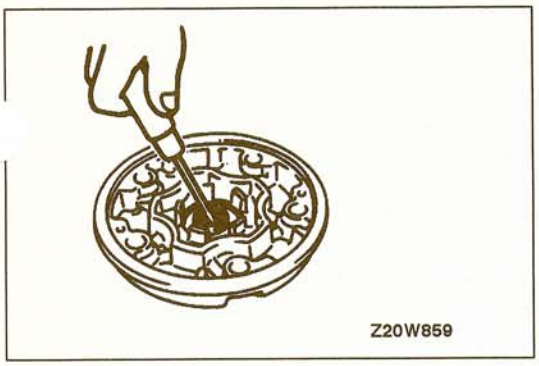


### ◀D▶ FELT REMOVAL

Use a flat-tip (–) screwdriver to remove the felt from the front housing.

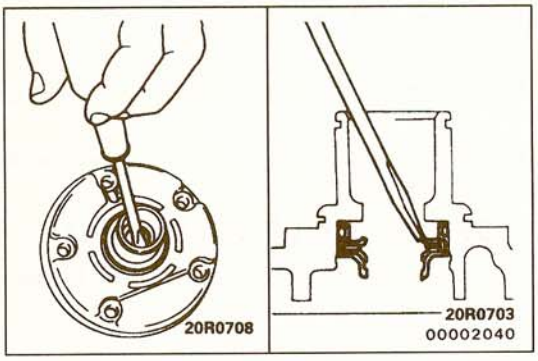


### ◀E▶ SHAFT SEAL REMOVAL

Use a flat-tip (–) screwdriver to remove the shaft seal from the front housing.

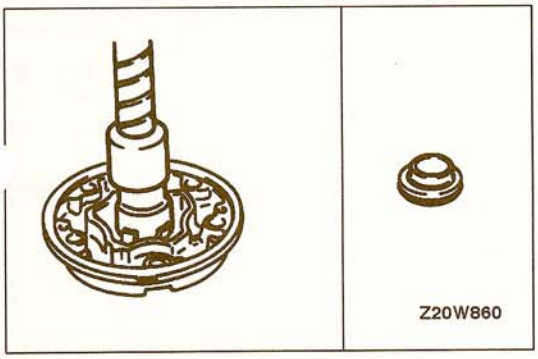


## REASSEMBLY SERVICE POINTS

### ▶A◀ SHAFT SEAL INSTALLATION

(1) Lubricate the shaft seal with specified compressor oil.

**Specified compressor oil: ND-OIL 8**

(2) Set the shaft seal to the front housing so that the projection side of the center ring is at the shaft seal side.

(3) Use a 21 mm (.83 in.) socket to install the shaft seal.

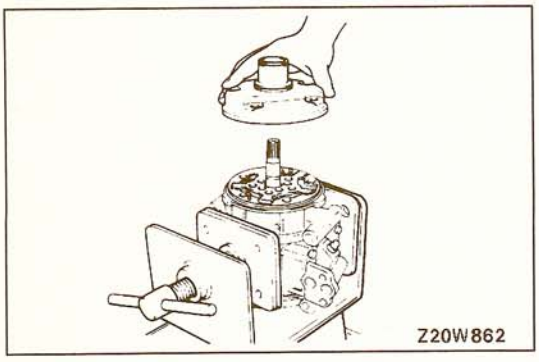


### ▶B◀ FRONT HOUSING INSTALLATION

(1) Apply specified compressor oil to the shaft.

**Specified compressor oil: ND-OIL 8**

(2) Install the front housing, taking care not to damage the lip part of the shaft seal.

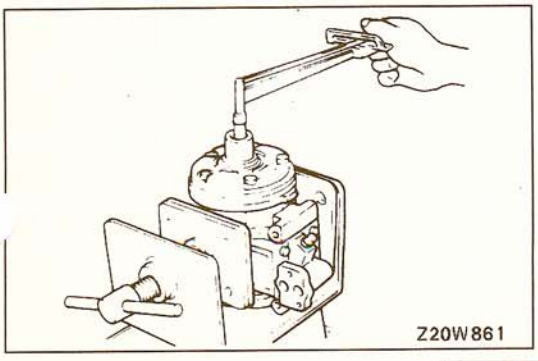


(3) Mount the bolt on the shaft, and then measure the shaft starting torque.

**Standard value: 4.9 Nm (43 in.lbs.) or less**

(4) Remove the bolt from the shaft.

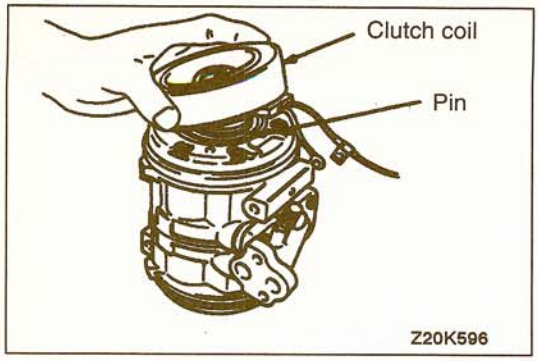


### ▶C◀ CLUTCH COIL INSTALLATION

The clutch coil must be aligned with the pin in the compression housing.

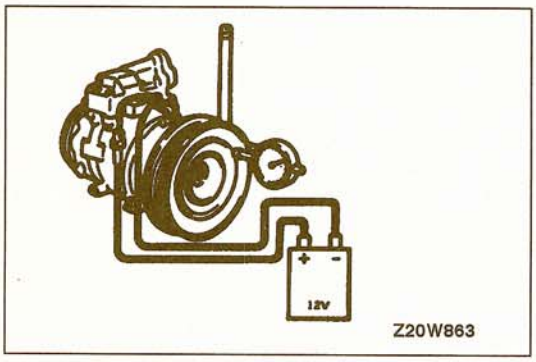


### ▶D◀ CLUTCH CLEARANCE ADJUSTMENT

(1) Connect the magnetic clutch to the battery.
(2) The clutch hub will be attracted to and fit closely to the rotor.
(3) Use a shim(s) to adjust so that the amount of movement of the clutch hub is as described below.

**Standard value: 0.35–0.65 mm (.0138–.0256 in.)**

(4) Turn the rotor by hand to confirm that it rotates freely.

## INSPECTION

55200470042

- Check the surface of the clutch hub for scoring or bluing.
- Check the surface of the rotor for scoring or bluing.
- Check the sealing surfaces for cracks, scratches and deformation.
- Check the front housing for cracks or scoring on the sealing surfaces.
- Check the compressor shaft for scoring.

## A


ABS
RELAY BOX, Check ..... 35C-29-I
ACCELERATOR
CABLE ..... 17-4-I
Check and Adjustment ..... 17-3-I
PEDAL ..... 17-4-I
ACCESSORY SOCKET ..... 54-75-II
AIR BAG
MODULE ..... 52B-48-I
Deployed Disposal Procedures ..... 52B-58-I
Disposal Procedures ..... 52B-54-I
Undeployed, Disposal ..... 52B-54-I
AIR CLEANER ELEMENT, Maintenance ..... 00-37-I
AIR CONDITIONING
COMPRESSOR ..... 55-32-I
COMPRESSOR CLUTCH RELAY
On-vehicle Inspection ..... 13A-110-I
CONDENSER ..... 55-29-I
CONDENSER FAN MOTOR ..... 55-29-I
CONTROL UNIT ..... 55-28-I
EVAPORATOR ..... 55-26-I
REFRIGERANT LINE ..... 55-30-I
SWITCH ..... 55-25-I
On-vehicle Inspection ..... 13A-110-I
TENSION PULLEY ..... 55-32-I
AIR LEAKAGE, Rear differential lock System Check ..... 27-16-I
ANTENNA
Motor ..... 54-113-II
Whip ..... 54-113-II
FEEDER CABLE ..... 54-113-II
ANTI-LOCK BRAKING SIGNAL
On-vehicle Inspection ..... 13A-159-I
ANTI-LOCK BRAKING SYSTEM ..... Refer to ABS
AUTOMATIC TRANSMISSION
Maintenance ..... 00-43-I
FLUID
Maintenance ..... 00-44-I
Temperature Switch Check ..... 23A-48-I
AXLE BUMPER ..... 34-8-I
AXLE HOUSING OIL SEAL ..... 27-15-I
AXLE HUB, Front ..... 26-12-I
AXLE SHAFT ..... 27-19-I


## B


BACK DOOR ..... 42-41-I
Adjustment ..... 42-10-I
HANDLE ..... 42-43-I
LATCH ..... 42-43-I
TRIM ..... 42-42-I
WATERPROOF FILM ..... 42-42-I
WINDOW DEFOGGER ..... 54-117-II
WINDOW GLASS ..... 42-23-I
BALL JOINT
Tie Rod End, Starting Torque Check ..... 37A-8-I
DUST COVER, Replacement ..... 33A-16-I
SEALS, Maintenance ..... 00-46-I
GREASE FITTING, Maintenance ..... 00-47-I
BAROMETRIC PRESSURE SENSOR
On-vehicle Inspection ..... 13A-78-I
BASIC IDLE SPEED, Adjustment ..... 13A-45-I
BATTERY ..... 54-2-II
BLOWER ..... 55-7-I
BODY MOUNTING ..... 42-12-I
BRAKE
Disc, Front ..... 35A-26-I
Disc, Rear ..... 35A-31-I
BOOSTER ..... 35A-20-I
Operating Test ..... 35A-6-I
DISC
Front, Rotor Check ..... 35A-12-I
Rear, Run-out Check ..... 35A-15-I
Rear, Run-out Correction ..... 35A-16-I
Rear, Thickness Check ..... 35A-15-I
DRUM
Contact Check with Brake Lining ..... 35A-17-I
Inside Diameter Check ..... 35A-17-I
Parking ..... 36-7-I
FLUID LEVEL SENSOR, Check ..... 35A-7-I
HOSES, Maintenance ..... 00-46-I
LEVER, Parking ..... 36-4-I
Stroke Check and Adjustment ..... 36-2-I
LINE
<Basic Brake System> ..... 35A-25-I
<Anti-lock Brake System> ..... 35C-30-I
LINING
Contact Check with Brake Drum ..... 35A-17-I
Thickness Check ..... 35A-16-I
Running-in ..... 36-3-I
PAD
Disc, Front, Check and Replacement ..... 35A-10-I
Disc, Rear, Check and Replacement ..... 35A-14-I
PEDAL ..... 35A-18-I
PEDAL, Check and Adjustment ..... 35A-6-I
BRAKE NO.3 PISTON ..... 23B-47-I
BUMPER
Axle ..... 34-8-I
Front ..... 51-4-I
Rear ..... 51-5-I


## C


CAMSHAFT
<3.0L engine> ..... 11B-39-I
<3.5L engine> ..... 11D-27-I
OIL SEAL
<3.0L-12 VALVE engine> ..... 11A-16-I
<3.0L-24 VALVE engine> ..... 11A-46-I
<3.5L engine> ..... 11C-17-I
POSITION SENSOR ..... 16-61-I
On-vehicle Inspection ..... 13A-89-I
CATALYTIC CONVERTER
<3.0L-12 VALVE engine> ..... 15-17-I
<3.0L-24 VALVE engine> ..... 15-17-I
<3.5L engine> ..... 15-19-I
CD PLAYER ..... 54-111-II
CENTER DIFFERENTIAL CASE
<V5MT1> ..... 22B-40-I
<V4AW2> ..... 23B-81-I
<V4AW3> ..... 23C-106-I
CENTER DIFFERENTIAL LOCK
DETECTION SWITCH
Check <A/T> ..... 23A-42-I
Check <M/T> ..... 22A-6-I
OPERATION SWITCH
Check <A/T> ..... 23A-43-I
Check <M/T> ..... 22A-6-I
CENTER SUPPORT ..... 23B-41-I
CHARGING SYSTEM ..... 16-2-II
Generator Output Line Voltage Drop Test ..... 16-6-II
Output Current Test ..... 16-7-II
Regulated Voltage Test ..... 16-9-II
Wave Pattern Check Using an Analyzer ..... 16-11-II
CHECK VALVE, Operation Check ..... 35A-7-I
CIGARETTE LIGHTER ..... 54-72-II

CLOCK ..... 54-78-II

CLOCK SPRING ..... 52B-48-I
CLOSED THROTTLE POSITION SWITCH
Adjustment ..... 13A-48-I
On-vehicle Inspection ..... 13A-86-I
CLUTCH ..... 21B-3-I
CONTROL ..... 21A-6-I
MASTER CYLINDER ..... 21A-8-I
PEDAL ..... 21A-5-I
Check and Adjustment ..... 21A-3-I
RELEASE CYLINDER ..... 21B-7-I
CLUTCH RELAY, Air Conditioning Compressor
On-vehicle Inspection ..... 13A-110-I
COIL SPRING ..... 34-8-I
COLUMN SWITCH ..... 54-67-II
COMBINATION LIGHT
Front ..... 54-63-II
Rear ..... 54-64-II
COMBINATION METER ..... 54-31-II
COMPRESSION PRESSURE, Check
<3.0L-12 VALVE engine> ..... 11A-9-I
<3.0L-24 VALVE engine> ..... 11A-40-I
<3.5L engine> ..... 11C-10-I
COMPRESSOR ..... 55-32-I
Noise Adjustment ..... 55-24-I
DRIVE BELT, Adjustment ..... 55-17-I
CONDENSER ..... 55-29-I
FAN MOTOR ..... 55-29-I
CONNECTING ROD
<3.0L engine> ..... 11B-63-I
<3.5L engine> ..... 11D-43-I
CONTROL CABLE, Adjustment ..... 23A-44-I
CONTROL LEVER ..... 22A-8-I
CONTROL MODULE
Engine, Power Ground On-vehicle Inspection ..... 13A-66-I
Engine, Terminal Voltage On-vehicle Inspection .. 13A-169-I
CONTROL SWITCH <Front Suspension> ..... 33A-21-I
CONTROL UNIT
ABS ..... 35C-36-I
Air Conditioning ..... 55-28-I
4WD Indicator, Check <A/T> ..... 23A-48-I
4WD Indicator, Check <M/T> ..... 22A-7-I
Suspension ..... 33A-21-I
COOLANT
Engine, Leak Check ..... 14-4-I
Engine, Maintenance ..... 00-45-I
Engine, Replacement ..... 00-45-I
COOLING FAN ..... 14-8-I
COUNTERSHAFT ..... 22B-24-I
GEAR ..... 23C-102-I
CRANKCASE VENTILATION SYSTEM ..... 17-41-I
CRANKSHAFT
<3.0L engine> ..... 11B-70-I
<3.5L engine> ..... 11D-50-I
OIL SEAL
Front<3.0L-12 VALVE engine> ..... 11A-18-I
<3.0L-24 VALVE engine> ..... 11A-48-I
<3.5L engine> ..... 11C-19-I
Rear <3.0L-12 VALVE engine> ..... 11A-19-I
<3.0L-24 VALVE engine> ..... 11A-49-I
<3.5L engine> ..... 11C-20-I
POSITION SENSOR ..... 16-61-II
On-vehicle Inspection ..... 13A-96-I
CRUISE CONTROL
CABLES, Check and Adjustment ..... 17-21-I
COMPONENT, Check ..... 17-25-I
MAIN SWITCH, Check ..... 17-23-I
SWITCH, Check ..... 17-24-I
CURB IDLE SPEED, Check
<3.0L-12 VALVE engine> ..... 11A-7-I
<3.0L-24 VALVE engine> ..... 11A-37-I
<3.5L engine> ..... 11C-8-I
CYLINDER HEAD
<3.0L engine> ..... 11B-47-I
<3.5L engine> ..... 11D-31-I
GASKET
<3.0L-12 VALVE engine> ..... 11A-23-I
<3.0L-24 VALVE engine> ..... 11A-55-I
<3.5L engine> ..... 11C-26-I


## D


DEFOGGER, Back Door Window ..... 54-117-II
RELAY ..... 54-121-II
SWITCH ..... 54-121-II
TIMER ..... 54-122-II
DIFFERENTIAL
Limited Slip, Preload Measurement ..... 27-14-I
CARRIER
Front Axle ..... 26-33-I
Rear Axle ..... 27-28-I
CARRIER OIL SEAL, Replacement ..... 26-9-I
LOCK, Rear ..... 27-25-I
LOCK SYSTEM, Rear, Air Leakage Check ..... 27-16-I
MOUNTING, Front ..... 32-4-I
DIFFERENTIAL PRESSURE SENSOR
FUEL TANK ..... 13A-160-I
MANIFOLD ..... 13A-115-I
DIRECT CLUTCH
<V4AW2> ..... 23B-39-I
<V4AW3> ..... 23C-53-I
DISC BRAKE
Front ..... 35A-26-I
Rear ..... 35A-31-I
PAD
Check ..... 35A-10-I
Maintenance ..... 00-46-I
DISTRIBUTOR
CAP, Maintenance ..... 00-39-I
ROTOR, Maintenance ..... 00-39-I
DOOR ..... 42-25-I
Back ..... 42-41-I
Back, Adjustment ..... 42-10-I
Front, Adjustment ..... 42-9-I
Fuel Filler, Adjustment ..... 42-9-I
Rear, Adjustment ..... 42-9-I
GLASS ..... 42-30-I
HANDLE ..... 42-33-I
HANDLE, Back ..... 42-43-I
LATCH ..... 42-33-I
LATCH, Back ..... 42-43-I
MIRROR ..... 51-21-I
OPENING WEATHERSTRIP ..... 42-40-I
REGULATOR ..... 42-30-I
TRIM ..... 42-27-I
TRIM, Back ..... 42-42-I
WATERPROOF FILM ..... 42-27-I
WATERPROOF FILM, Back ..... 42-42-I
WINDOW GLASS, Adjustment ..... 42-10-I
DRIVE BELT
Compressor, Adjustment <Air Conditioning> ..... 55-17-
Maintenance ..... 00-40-
Tension Check <Power Steering> ..... 37A-9-I
Tension Check and Adjustment
<3.0L-12 VALVE engine> ..... 11A-5-I
<3.0L-24 VALVE engine> ..... 11A-35-I

<3.5L engine> ..... 11C-6-I
DRIVE PLATE
<3.0L engine> ..... 11B-70-I
<3.5L engine> ..... 11D-50-I
DRIVE SHAFT
Front Axle ..... 26-20-I
End Play Check ..... 26-9-I
BOOTS, Maintenance ..... 00-46-I
DUST COVER
Ball Joint, Replacement ..... 33A-13-I
Lower Ball Joint, Replacement ..... 33A-16-I


## E


EGR
SOLENOID, On-vehicle Inspection <DOHC> ..... 13A-157-I
SYSTEM ..... 17-53-I
ELECTRICAL LOAD SWITCH <DOHC> ..... 13A-113-I
ELECTRONIC CONTROL UNIT <ABS> ..... 35C-36-I
EMISSION CONTROL SYSTEM
Evaporative, Maintenance ..... 00-37-I
ENGINE
<3.0L-12 VALVE engine> ..... 11A-13-I
<3.0L-24 VALVE engine> ..... 11A-43-I
<3.5L engine> ..... 11C-14-I
CONTROL MODULE POWER GROUND
On-vehicle Inspection ..... 13A-66-I
CONTROL MODULE TERMINAL VOLTAGE
On-vehicle Inspection ..... 13A-169-I
MOUNTING ..... 32-2-I
ENGINE COOLANT
Leak Check ..... 14-4-I
Maintenance ..... 00-45-I
Replacement ..... 00-45-I
TEMPERATURE GAGE UNIT ..... 14-16-I
TEMPERATURE SENSOR ..... 14-16-I
On-vehicle Inspection ..... 13A-80-I
ENGINE OIL
Maintenance ..... 00-41-I
COOLER <3.0L-12 VALVE engine> ..... 11A-30-I
<3.0L-24 VALVE engine> ..... 11A-63-I
<3.5L engine> ..... 11C-36-I
OIL FILTER, Maintenance ..... 00-41-I
EVAPORATIVE EMISSION
CONTROL SYSTEM ..... 17-44-I
CONTROL SYSTEM Maintenance ..... 00-37-I
PURGE SOLENOID On-vehicle Inspection ..... 13A-151-I
EVAPORATOR ..... 55-26-I
EXHAUST
MANIFOLD <3.0L-12 VALVE engine> ..... 11B-36-I, 15-12-I
<3.0L-24 VALVE engine> ..... 11B-36-I, 15-14-I
<3.5L engine> ..... 11D-26-I, 15-15-I
PIPE <3.0L engine> ..... 15-17-I
<3.5L engine> ..... 15-19-I
EXHAUST GAS RECIRCULATION SYSTEM ..... Refer to EGR
EXHAUST SYSTEM, Maintenance ..... 00-48-I


## F


FAN, Cooling ..... 14-8-I
FAN MOTOR, Condenser ..... 55-29-I
FEEDER CABLE, Antenna ..... 54-113-II
FENDER ..... 42-15-I
FIXED ENGINE SPEED ADJUSTING SCREW, Adjustment ..... 13A-50-I
FLOOR CONSOLE ..... 52A-5-I
FLUID COOLER, Transmission ..... 23A-85-I
FLUID HOSES, Transmission ..... 23A-85-I
FLUID PIPE, Transmission ..... 23A-85-I
FLYWHEEL ..... 11B-70-I
FORWARD CLUTCH
<V4AW2> ..... 23B-37-I
<V4AW3> ..... 23C-56-I
4WD INDICATOR CONTROL UNIT
Check <A/T> ..... 23A-48-I
Check <M/T> ..... 22A-7-I
4WD OPERATION DETECTION SWITCH
Check <A/T> ..... 23A-43-I
Check <M/T> ..... 22A-6-I
FREE-WHEELING CLUTCH ..... 26-35-I
FRONT IMPACT SENSORS ..... 52B-42-I
FUEL
FILLER DOOR, Adjustment ..... 42-9-I
HOSES, Maintenance ..... 00-37-I
LINE ..... 13F-9-I
LINE, Internal Pressure Reducing ..... 13F-3-I
PRESSURE, Test On-vehicle Inspection ..... 13A-162-I
PUMP ..... 13F-4-I
Operation Check ..... 13F-3-I
On-vehicle Inspection ..... 13A-67-I
SYSTEM, Maintenance ..... 00-37-I
FUEL TANK ..... 13F-6-I
FILLER DOOR ..... 42-14-I


## G


GARNISHES ..... 51-6-I
GEAR SHIFT CASE ..... 22B-25-I
GENERATOR ..... 11B-15-I, 11D-11-I, 16-13-II
GLASS
Back Door Window ..... 42-23-I
Door ..... 42-30-I
Door Window, Adjustment ..... 42-10-I
Quarter Window ..... 42-21-I
Window ..... 42-16-I
GOVERNOR ..... 23B-48-I
G-SENSOR
ABS ..... 35C-32-I
Output Voltage Check <ABS> ..... 35C-29-I


## H


HUB BOLT
Replacement ..... 27-14-I
HAZARD LIGHT SWITCH ..... 54-65-II
HEADLIGHT ..... 54-63-II
HEADLIGHT WASHER ..... 51-18-I
HEATED OXYGEN SENSOR
On-vehicle Inspection ..... 13A-117-I
HEATER UNIT ..... 55-6-I
H/L SHIFT FORK ..... 22B-37-I
HI/LO DETECTION SWITCH
Check <A/T> ..... 23A-43-I
Check <M/T> ..... 22A-6-I
HIGH MOUNTED STOP LIGHT ..... 54-65-II
HIGH TENSION CABLE, Spark Test
<3.0L-12 VALVE engine> ..... 16-36-II
HOOD ..... 42-13-I
ALIGNMENT, Adjustment ..... 42-9-I
HORN ..... 54-69-I
HYDRAULIC UNIT
ABS ..... 35C-31-I
Check <ABS> ..... 35C-26-I


## I


IDLE AIR CONTROL MOTOR
On-vehicle Inspection ..... 13A-130-I

IDLE MIXTURE, Check
<3.0L-12 VALVE engine> ..... 11A-8-I
<3.0L-24 VALVE engine> ..... 11A-38-I
<3.5L engine> ..... 11C-9-I
IDLE SPEED
Basic, Adjustment ..... 13A-45-I
Curb, Check
<3.0L-12 VALVE engine> ..... 11A-7-I
<3.0L-24 VALVE engine> ..... 11A-37-I
<3.5L engine> ..... 11C-8-I
IDLE-UP OPERATION, Check ..... 55-25-I
IGNITION
CABLES, Maintenance ..... 00-39-I
COIL, On-vehicle Inspection ..... 13A-135-I
POWER TRANSISTOR, On-vehicle Inspection ..... 13A-135-I
SWITCH ..... 54-4-II
IG, On-vehicle Inspection ..... 13A-63-I
ST (A/T), On-vehicle Inspection ..... 13A-102-I
ST (M/T), On-vehicle Inspection ..... 13A-100-I
SYSTEM
<3.0L-12 VALVE engine> ..... 11B-20-I, 16-49-II
<3.0L-24 VALVE engine> ..... 11B-20-I, 16-53-II
<3.5L engine> ..... 11D-14-I, 16-57-II
Check, Primary voltage wave pattern ..... 16-43-I
Secondary voltage wave pattern ..... 16-37-II
TIMING
Inspection
<3.0L-12 VALVE engine> ..... 11A-6-I
<3.0L-24 VALVE engine> ..... 11A-36-I
<3.5L engine> ..... 11C-7-I
Adjustment <3.0L-12 VALVE engine> ..... 11A-6-I
IMPACT SENSORS, Front ..... 52B-42-I
INJECTORS, On-vehicle Inspection ..... 13A-124-I
INNER SHAFT ..... 26-29-I
INPUT GEAR ..... 23B-87-I
INSTRUMENT PANEL ..... 52A-2-I
INTAKE AIR TEMPERATURE SENSOR
On-vehicle Inspection ..... 13A-75-I
INTAKE MANIFOLD
<3.0L engine> ..... 11B-31-I, 15-9-I
<3.5L engine> ..... 11D-22-I, 15-9-I
INTAKE MANIFOLD PLENUM
<3.0L engine> ..... 11B-18-I, 15-5-I
<3.5L engine> ..... 11D-13-I, 15-5-I
INTAKE MANIFOLD, Vacuum Inspection ..... 15-2-I
INTER-LOCK SWITCH, Check and Adjustment ..... 21A-4-I


## J


JOINTS, Propeller Shaft, Maintenance ..... 00-48-I


## K


KEY INTER-LOCK MECHANISM, Check ..... 23A-46-I
KEYLESS ENTRY SYSTEM ..... 42-37-I
KNOCK SENSOR ..... 16-62-II
On-vehicle Inspection <DOHC> ..... 13A-112-I
KNUCKLE ..... 26-17-I


## L


LASH ADJUSTER, Check
<3.0L-12 VALVE engine> ..... 11A-11-I
<3.0L-24 VALVE engine> ..... 11A-41-I
<3.5L engine> ..... 11C-12-I
LATCH
Back Door ..... 42-43-I
Door ..... 42-33-I
LATERAL ROD ..... 34-6-I
LATERAL ROD BUSHING, Replacement ..... 34-7-I
LIGHT
Front Combination ..... 54-63-II
License Plate ..... 54-64-I
Rear Combination ..... 54-64-
Stop, High Mounted ..... 54-65-II
LIGHTER, Cigarette ..... 54-72-II
LIGHTING SYSTEM ..... 54-39-II
Adjustment ..... 54-39-II
LIMITED SLIP DIFFERENTIAL, Preload Measurement ..... 27-14-I
LINING RUNNING-IN ..... 36-3-I
LOAD SENSING PROPORTIONING VALVE, Function Test . 35A-8-I
LOAD SENSING SPRING, Length Check and Adjustment .. 35A-8-I
LOWER ARM
Front Suspension ..... 33A-14-I
Rear Suspension ..... 34-4-I


## M


MAIN SHAFT ..... 22B-21-I
MASTER CYLINDER ..... 35A-23-I
MASTER CYLINDER, Clutch ..... 21A-8-I
MIRROR, Door ..... 51-21-I
MOULDINGS ..... 51-6-I
MUFFLER <3.0L-12 VALVE engine> ..... 15-17-I
<3.0L-24 VALVE engine> ..... 15-17-I
<3.5L engine> ..... 15-19-I
MULTI-METER ..... 54-35-II


## O


OIL
COOLER <3.0L-12 VALVE engine> ..... 11A-30-I
<3.0L-24 VALVE engine> ..... 11A-63-I
<3.5L engine> ..... 11C-36-I
FILTER, Engine, Maintenance ..... 00-41-I
PAN
<3.0L-12 VALVE engine> ..... 11A-21-I, 11B-55-I
<3.0L-24 VALVE engine> ..... 11A-51-I, 11B-55-I
<3.5L engine> ..... 11C-22-I, 11D-38-I
PRESSURE SWITCH, Power Steering, Check ..... 37A-13-I
PUMP
Engine
<3.0L engine> ..... 11B-55-I
<3.5L engine> ..... 11D-38-I
Power Steering ..... 37A-28-I
Power Steering, Pressure Test ..... 37A-12-I
Transmission
<V4AW2> ..... 23B-30-I
<V4AW3> ..... 23C-46-I
SCREEN <3.0L-12 VALVE engine> ..... 11A-21-I
<3.0L-24 VALVE engine> ..... 11A-51-I
<3.5L engine> ..... 11C-22-I
ONE-WAY CLUTCH ..... 23C-60-I
OUTPUT SHAFT
FRONT
<V5MT1> ..... 22B-38-I
<V4AW2> ..... 23B-86-I
<V4AW3> ..... 23C-109-I
REAR
<V5MT1> ..... 22B-39-I
<V4AW2> ..... 23B-80-I
<V4AW3> ..... 23C-107-I
OUTSIDE TEMPERATURE SENSOR ..... 54-38-II
OVERDRIVE
BRAKE ..... 23B-35-I
CLUTCH
<V4AW2> ..... 23B-32-I
<V4AW3> ..... 23C-48-I

PLANETARY GEAR
<V4AW2> ..... 23B-34-I
<V4AW3> ..... 23C-48-I
SUPPORT ..... 23C-51-I


## P


PARKING BRAKE
CABLE ..... 36-5-I
DRUM ..... 36-7-I
LEVER ..... 36-4-I
LEVER, Stroke Check and Adjustment ..... 36-2-I
SWITCH, Check ..... 36-3-I
PARK/NEUTRAL POSITION SWITCH
Adjustment ..... 23A-44-I
Check ..... 23A-43-I
On-vehicle Inspection ..... 13A-102-I
PISTON
<3.0L engine> ..... 11B-63-I
<3.5L engine> ..... 11D-43-I
PLANETARY GEAR
FRONT
<V4AW2> ..... 23B-45-I
<V4AW3> ..... 23C-59-I
OVERDRIVE
<V4AW2> ..... 23B-34-I
<V4AW3> ..... 23C-48-I
REAR
<V4AW2> ..... 23B-46-I
<V4AW3> ..... 23C-64-I
PLANETARY SUN GEAR ..... 23C-60-I
POWER GROUND, Engine Control Module
On-vehicle Inspection ..... 13A-66-I
POWER STEERING
FLUID
Level Check ..... 37A-10-I
Replacement ..... 37A-10-I
GEAR BOX ..... 37A-18-I
OIL PRESSURE SWITCH, Check ..... 37A-13-I
OIL PUMP ..... 37A-28-I
OIL PUMP, Pressure Test ..... 37A-12-I
PRESSURE SWITCH
On-vehicle Inspection ..... 13A-108-I


## Q


QUARTER WINDOW GLASS ..... 42-21-I


## R


RADIATOR ..... 14-6-I
RADIATOR CAP, Pressure Check ..... 14-5-I
RADIO ..... 54-80-II
RADIO AND TAPE PLAYER ..... 54-80-II
REAR AXLE
Maintenance ..... 00-47-I
Total Backlash Check ..... 27-13-I
REAR AXLE OIL (LSD), Maintenance ..... 00-47-I
REAR COMBINATION LIGHT ..... 54-64-II
REAR DIFFERENTIAL LOCK ..... 27-25-I
DETECTION SWITCH, Check ..... 27-16-I
SYSTEM, Air Leakage Check ..... 27-16-I
REAR WASHER ..... 51-15-I
REAR WIPER ..... 51-15-I
REFRIGERANT
Leak Repair Procedure ..... 55-23-I
CHARGING ..... 55-18-I
LINE ..... 55-30-I
REGULATOR, Door ..... 42-30-I
RELAY Box, Check <ABS> ..... 35C-29-I
RELEASE CYLINDER ..... 21B-7-I
RHEOSTAT ..... 54-66-II
ROCKER ARM
<3.0L engine> ..... 11B-39-I
<3.5L engine> ..... 11D-27-I
RUNCHANNEL, Window Glass ..... 42-40-I


## S


SEAT
Front ..... 52A-10-I
Second ..... 52A-15-I
Third ..... 52A-17-I
SEAT BELT
Front ..... 52A-18-I
Second ..... 52A-20-I
Third ..... 52A-21-I
SELECTOR LEVER ..... 23A-86-I
Operation Check ..... 23A-49-I
SENSOR
Barometric Pressure ..... Refer to B
Brake Fluid Level ..... 35A-7-I
Camshaft Position ..... Refer to C
Crankshaft Position ..... Refer to C
Differential pressure ..... Refer to D
Engine Coolant Temperature ..... Refer to E
Front Impact ..... 52B-42-I
G <ABS> ..... 35C-32-I
G, Output Voltage Check <ABS> ..... 35C-29-I
Intake Air Temperature ..... Refer to I
Knock ..... 16–62-II
On-vehicle Inspection ..... 13A–112-I
Outside Temperature ..... 54-38-II
Throttle Position ..... Refer to T
Vehicle Speed ..... Refer to V
Volume Air Flow ..... Refer to V
Wheel Speed <ABS> ..... 35C-33-I
Wheel Speed, Output Voltage Measurement <ABS> 35C-25-I
SERVO, Idle Air Control, On-vehicle Inspection ..... 13A-130-I
SHIFT LOCK MECHANISM, Check ..... 23A-47-I
SHOCK ABSORBER
Front Suspension ..... 33A-11-I
Rear Suspension ..... 34-6-I
SOCKET, Accessory ..... 54-75-II
SOLENOID
EGR ..... Refer to E
Evaporative Emission Purge ..... Refer to E
Variable Induction Control ..... 13A-149-I
SOLENOID VALVE
Front Axle ..... 26-32-I
Front Axle, Operation Check ..... 26-11-I
SPARK PLUG
Test <3.0L-12 VALVE engine> ..... 16-36-II
Maintenance ..... 00-39-I
SPARK PLUG CABLE, Test <3.0L-12 VALVE engine> ..... 16-36-II
SPEAKER ..... 54-112-II
SPEED SENSOR
Wheel <ABS> ..... 35C-33-I
Wheel, Output Voltage Measurement <ABS> ..... 35C-25-I
SPEEDOMETER GEAR
<V4AW2> ..... 23B-88-I
<V4AW3> ..... 23C-110-I
SRS
Circuit Diagram ..... 52B-12-I
Component Location ..... 52B-14-I
Configuration Diagrams ..... 52B-8-I
Connector Construction ..... 52B-10-I
Construction Diagrams ..... 52B-3-I

Diagnosis Unit (SDU) ..... 52B-45-I
Maintenance ..... 00-48-I, 52B-38-I
Post-collision Diagnosis ..... 52B-38-I
Schematic ..... 52B-7-I
Service Precautions ..... 52B-15-I
Warning/caution Labels ..... 52B-4-I
STABILIZER BAR
Front Suspension ..... 33A-19-I
Rear Suspension ..... 34-9-I
STARTER MOTOR ..... 16-22-II
STARTING SYSTEM ..... 16-19-II
STEERING
Angle Check ..... 37A-8-I
Stationary Steering Effort Check ..... 37A-8-I
COLUMN ..... 37A-14-I
GEAR, Backlash Check ..... 37A-7-I
HOSES ..... 37A-33-I
LINKAGE ..... 37A-35-I
LINKAGE SEALS, Maintenance ..... 00-46-I
SHAFT ..... 37A-14-I
WHEEL
Return to Center Check ..... 37A-9-I
STOP LIGHT, High Mounted ..... 54-65-II
SUNROOF ..... 42-44-I
SWITCH
Air Conditioning ..... Refer to A
Center Differential Lock ..... Refer to C
Closed Throttle Position ..... Refer to C
Column ..... 54-67-II
Control <Suspension> ..... 33A-21-I
Cruise Control, Check ..... 17-24-I
Defogger ..... 54-118-II
Electrical Load <DOHC> ..... 13A-113-I
4WD Operation Detection ..... Refer to F
Hazard Light ..... 54-65-II
HI/LO Detection ..... Refer to H
Ignition ..... 54-7-II
Ignition-IG ..... Refer to I
Ignition-ST ..... Refer to I
Inter-lock, Check and Adjustment ..... 21A-4-I
Lighting ..... 54-39-II
Main, Cruise Control, Check ..... 17-23-I
Park/Neutral Position ..... Refer to P
Parking Brake, Check ..... 36-3-I
Power Steering Pressure ..... Refer to P
Power Steering Oil Pressure, Check ..... 37A-13-I
Rear Differential Lock Detection, Check ..... 27-16-I
2WD/4WD Detection, Check <A/T> ..... 23A-42-I
2WD/4WD Detection, Check <M/T> ..... 22A-6-I


## T


TAPE PLAYER 54-111-II
THERMOSTAT
<3.0L-12 VALVE engine> ..... 14-10-I
<3.0L-24 VALVE engine, 3.5L engine> ..... 14-12-I
THERMO SWITCH ..... 14-16-I
THROTTLE BODY
<3.0L engine> ..... 11B-18-I
<3.5L engine> ..... 11D-13-I
Cleaning ..... 13A-48-I
THROTTLE POSITION SENSOR
Adjustment ..... 13A-48-I
On-vehicle Inspection ..... 13A-83-I
TIE ROD END BALL JOINT, Starting Torque Check ..... 37A-8-I
TIMER, Defogger ..... 54-120-II
TIMING BELT
Engine <3.0L-12 VALVE engine> ..... 11A-26-I, 11B-23-I
<3.0L-24 VALVE engine> ..... 11A-58-I, 11B-23-I
<3.5L engine> ..... 11C-30-I, 11D-15-I
Maintenance ..... 00-39-I
Tension Adjustment <3.0L-12 VALVE engine> ..... 11A-10-I
TIRE, Wear Check ..... 31-4-I
TORSION BAR ..... 33A-1
TRANSFER
<V5MT1> ..... 22A-10-I, 22B-28-I
<V4AW2> ..... 23A-87-I, 23B-71-I
<V4AW3> ..... 23A-87-I, 23C-90-I
Maintenance ..... 00-44-I
CASE PLATE ..... 23C-100-I
DRIVE SHAFT
<V5MT1> ..... 22B-43-I
<V4AW2> ..... 23B-84-I
<V4AW3> ..... 23C-108-I
INPUT GEAR ..... 23C-101-I
TRANSMISSION
<V5MT1> ..... 22A-10-I, 22B-12-I
<V4AW2> ..... 23A-87-I, 23B-15-I
<V4AW3> ..... 23A-87-I, 23C-17-I
TRIM
Back Door ..... 42-42-I
Door ..... 42-27-I
Interior ..... 52A-7-I
2-4 WD SYNCHRONIZER
<V5MT1> ..... 22B-41-I
<V4AW2> ..... 23B-82-I
<V4AW3> ..... 23C-104-I
2WD/4WD DETECTION SWITCH
Check <A/T> ..... 23A-42-I
Check <M/T> ..... 22A-6-I


## U


UPPER ARM ..... 33A-11-


## V


VACUUM HOSE
Emission Control ..... 17-33-I
Front Axle ..... 26-32-I
VALVE BODY
<V4AW2> ..... 23B-50-I
<V4AW3> ..... 23C-70-I
VAPOR LINE ..... 13F-9-I
VARIABLE INDUCTION CONTROL
SOLENOID, On-vehicle Inspection <DOHC> ..... 13A-149-I
SYSTEM INSPECTION ..... 15-3-I
VEHICLE SPEED SENSOR, On-vehicle Inspection ..... 13A-106-I
VENTILATORS
Air Outlet ..... 55-10-I
Instrument Panel and Floor ..... 55-9-I
VOLUME AIR FLOW SENSOR
On-vehicle Inspection ..... 13A-70-I


## W


WASHER
Headlight ..... 51-18-I
Rear ..... 51-15-I
Windshield ..... 51-12-I
WATER PUMP ..... 14-14-I
WATERPROOF FILM
Back Door ..... 42-42
Door ..... 42-27-
WEATHERSTRIP, Door Opening ..... 42-40-I
WHEEL
Runout Check ..... 31-4-I
ALIGNMENT

Front, Inspection and Adjustment ..... 33A-9-I
Rear Adjustment ..... 34-3-I
SPEED SENSOR
ABS ..... 35C-33-I
Output Voltage Measurement <ABS> ..... 35C-25-I
WINDOW GLASS ..... 42-16-I
WINDOW GLASS
Back Door ..... 42-23-I
Door, Adjustment ..... 42-10-I
Quarter ..... 42-21-I
WINDOW GLASS RUNCHANNEL ..... 42-40-I
WINDSHIELD ..... 42-18-I
WASHER ..... 51-12-I
WIPER ..... 51-12-I
WIPER
Rear ..... 51-15-I
Windshield ..... 51-12-I

# MONTERO Specs-At-A-Glance

| | | | | | |
|---|---|---|---|---|---|
| **00 General** | Engine | | 3.0L-12VALVE | 3.0L-24VALVE | 3.5L |
| | Engine size | $cm^3$ (cu.in.) | 2,972 (181.3) | 2,972 (181.3) | 3,497 (213.4) |
| | Engine oil capacity, w/ filter & oil cooler | $dm^3$ (qts.) | 4.9 (5.2) | 4.9 (5.2) | 4.9 (5.2) |
| | Cooling system capacity | $dm^3$ (qts.) | 9.5 (10.0) | 9.5 (10.0) | 9.5 (10.0) |
| | A/T capacity | $dm^3$ (qts.) | 7.2 (7.6) | 8.5 (9.0) | 8.5 (9.0) |
| | Power steering capacity | $dm^3$ (qts.) | 1.06 (1.12) | 1.06 (1.12) | 1.06 (1.12) |
| **11 Engine** | Firing order | | 1-2-3-4-5-6 | 1-2-3-4-5-6 | 1-2-3-4-5-6 |
| | Compression pressure | kPa (psi) | 1,200 (171) | 1,200 (171) | 1,200 (171) |
| | Difference between cylinders | kPa (psi) | 100 (14) | 100 (14) | 100 (14) |
| **13 Fuel** | Fuel tank capacity | $dm^3$ (gals.) | 92 (24.3) | 92 (24.3) | 92 (24.3) |
| | Fuel pressure | | | | |
| | <When vacuum hose disconnected> | kPa (psi) | 330–370 (47-53) | 330–370 (47-53) | 330–370 (47-53) |
| | <When vacuum hose connected> | kPa (psi) | Approx. 270 (38) | Approx. 270 (38) | – |
| | Basic ignition timing | | 5° ± 2°BTDC | 5° ± 3°BTDC | 5° ± 3°BTDC |
| | Curb idle speed | rpm | 700 ± 100 | 700 ± 100 | 700 ± 100 |
| | TPS voltage | V | 0.40–1.00 | 0.40–1.00 | 0.40–1.00 |
| | TPS resistance | kΩ | 3.5–6.5 | 3.5–6.5 | 3.5–6.5 |
| | Intake air temp. sensor resistance | kΩ [at 20°C (68°F)] | 2.7 | 2.7 | 2.7 |
| | Engine coolant temp. sensor resistance | kΩ | | | |
| | [at 20°C (68°F)] | | 2.4 | 2.4 | 2.4 |
| | [at 80°C (176°F)] | | 0.3 | 0.3 | 0.3 |
| **14 Engine Cooling** | Radiator pressure cap opens | kPa (psi) | 75–105 (11–15) | 75–105 (11–15) | 75–105 (11–15) |
| **23A A/T** | Fluid capacity | $dm^3$ (qts.) | 7.2 (7.6) | 8.5 (9.0) | 8.5 (9.0) |
| **26 Front Axle** | Drive shaft nut torque | Nm (ft.lbs.) | 49–58 (36–43) | 49–58 (36–43) | 49–58 (36–43) |
| | Caliper assembly mounting bolt torque | Nm (ft.lbs.) | 88 (65) | 88 (65) | 88 (65) |
| **27 Rear Axle** | Axle shaft nut torque | Nm (ft.lbs.) | 49–58 (36–43) | 49–58 (36–43) | 49–58 (36–43) |
| **31 Wheel and Tire** | Tire inflation pressure | kPa (psi) | | | |
| | Vehicles with wide fender | | | | |
| | 31 × 10.50R15LT <Front> | | 210 (30) | 210 (30) | 210 (30) |
| | <Rear> | | 275 (40) | 275 (40) | 310 (45) |
| | 265/70R15 110H <Front> | | 180 (26) | 180 (26) | 180 (26) |
| | <Rear> | | 200 (29) | 200 (29) | 220 (32) |
| | Others | | | | |
| | P235/75R15 <Front> | | 180 (26) | 180 (26) | – |
| | <Rear> | | 240 (35) | 240 (35) | – |
| **33A Front Suspension** | Front wheel alignment | | | | |
| | <Camber> | | 0°40' ± 30' | 0°40' ± 30' | 0°40' ± 30' |
| | <Caster> | | 3°00' ± 1°00' | 3°00' ± 1°00' | 3°00' ± 1°00' |
| | <Toe-in> | mm (in.) | 3.5 ± 3.5 (.14 ± .14) | 3.5 ± 3.5 (.14 ± .14) | 3.5 ± 3.5 (.14 ± .14) |
| **34 Rear Suspension** | Axle shaft nut torque | Nm (ft.lbs.) | 49–58 (36–43) | 49–58 (36–43) | 49–58 (36–43) |
| **35 Brakes** | Front disc runout | mm (in.) | 0.08 (.0031) or less | 0.08 (.0031) or less | 0.08 (.0031) or less |
| | Front disc minimum thickness | mm (in.) | 22.4 (.882) | 22.4 (.882) | 25.4 (1.0) |
| | Rear disc runout | mm (in.) | 0.08 (.0031) or less | 0.08 (.0031) or less | 0.08 (.0031) or less |
| | Rear disc minimum thickness | mm (in.) | 16.4 (.646) | 16.4 (.646) | 16.4 (.646) |
| | Rear drum inside diameter, max. | mm (in.) | 198 (7.795) | 198 (7.795) | 198 (7.795) |
| | Parking brake lever stroke | | 4–6 notches | 4–6 notches | 4–6 notches |
| **51 Exterior** | Wiper blade length | mm (in.) | | | |
| | Windshield wiper | | 475 (18.7) | 475 (18.7) | 475 (18.7) |
| | Rear window | | 375 (14.8) | 375 (14.8) | 375 (14.8) |
| **55 Heater,A/C,Ventilation** | Refrigerant quantity | g (oz.) | 600–650 (21–23) | 600–650 (21–23) | 600–650 (21–23) |

0.10(.0039) or less up to 5/95
0.06(.0024) or less from 6/95



PRINTED IN JAPAN