MITSUBISHI MOTORS

Service Manual

CHASSIS AND BODY

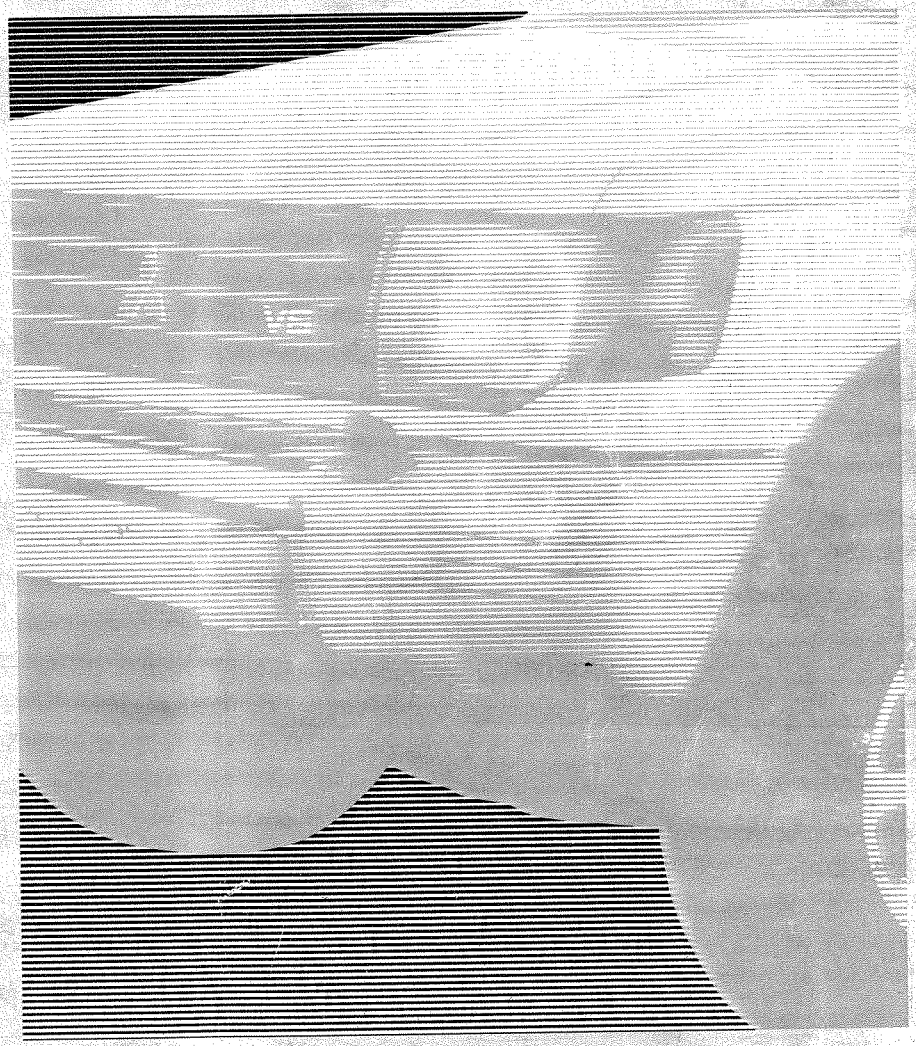

MONTERO

Service Manual

MONTERO

1992 : Volume 1

FOREWORD

This Service Manual has been prepared with the latest service information available at the time of publication. It is subdivided into various group categories and each section contains diagnosis, disassembly, repair, and installation procedures along with complete specifications and tightening references. Use of this manual will aid in properly performing any servicing necessary to maintain or restore the high levels of performance and reliability designed into these outstanding vehicles.

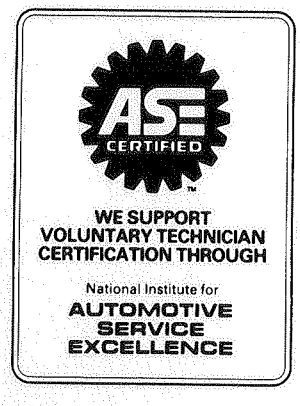

MITSUBISHI
MOTOR SALES OF AMERICA, Inc.

Mitsubishi Motors corporation reserves the right to make changes in design or to make additions to or improvements in its products without imposing any obligations upon itself to install them on its products previously manufactured.

GROUP INDEX

M00AA-A

General	00
Engine	11
Fuel	13
Cooling	14
Intake and Exhaust	15
Emission Control	17
Clutch	21
Manual Transmission	22
Automatic Transmission	23
Propeller Shaft	25
Front Axle	26
Rear Axle	27
Wheel and Tire	31
Power Plant Mount	32
Front Suspension	33
Rear Suspension	34
Service Brakes	35
Parking Brakes	36
Steering	37
Body	42
Exterior	51
Interior	52
Heater, Air Conditioner and Ventilation	55

NOTE
For Electrical refer to ...
Volume-2 "Electrical"

© 1991 Mitsubishi Motors Corporation

Printed in Japan

NOTES

GENERAL

CONTENTS

M00OA--

GENERAL DATA AND SPECIFICATIONS ... 19
HOW TO USE THIS MANUAL 3
- Definition of Terms 3
- Explanation of Circuit Diagrams 7
- Explanation of Manual Contents 4
- Explanation of the Troubleshooting Guide . 6
- Models Indications 3
- Scope of Maintenance, Repair and Servicing Explanations 3
- Service Adjustment Procedures 3
- Service Procedures 3
- Troubleshooting 3

LUBRICATION AND MAINTENANCE 27
MAINTENANCE SERVICE 35
- Air Cleaner Element 35
- Automatic Transmission 40
- Ball Joint and Steering Linkage Seals 43
- Ball Joints with Grease Fitting 43
- Brake Hoses 43
- Canister 36
- Crankcase Emission Control System (Positive Crankcase Ventilation Valve) 35
- Disc Brake Pads 42
- Distributor Cap and Rotor 37
- Drive Belt 38
- Drive Shaft Boots 43
- Engine Coolant 41
- Engine Oil 38
- Engine Oil Filter 39
- Evaporative Emission Control System (except Canister) 36
- Exhaust System (Connection Portion of Muffler, Pipings and Converter Heat Shields . 44
- Front Axle and Rear Axle 44
- Fuel Hoses 35
- Fuel System 35
- Ignition Cables 37
- Manual Transmission 39
- Oxygen Sensor 37
- Propeller Shaft Joints 44
- Rear Axle Oil (Limited Slip Differential) ... 44
- Spark Plugs 37
- Timing Belt 38
- Transfer 41

MASTER TROUBLESHOOTING 21
PRECAUTIONS BEFORE SERVICE 12
- Service Electrical System 12
- Vehicle Washing 12

RECOMMENDED LUBRICANTS AND LUBRICANT CAPACITIES TABLE 29
SCHEDULED MAINTENANCE TABLE 32
TIGHTENING TORQUE 20
TOWING AND HOISTING 16
TREATMENT BEFORE/AFTER THE FORDING OF A STREAM 13
VEHICLE IDENTIFICATION 8
- Chassis Number 10
- Engine Model Stamping 11
- Vehicle Identification Code Chart Plate ... 8
- Vehicle Identification Number Location ... 8
- Vehicle Identification Number List 9
- Vehicle Information Code Plate 10
- Vehicle Safety Certification Label 11

NOTES

HOW TO USE THIS MANUAL

M00BAAF

SCOPE OF MAINTENANCE, REPAIR AND SERVICING EXPLANATIONS

This manual provides explanations, etc. concerning procedures for the inspection, maintenance, repair and servicing of the subject model. Unless otherwise specified, each service procedure covers all models. Procedures covering specific models are identified by the model codes, or similar designation (engine type, transaxle type, etc.). A description of these designations is covered in this unit under "VEHICLE IDENTIFICATION".

SERVICE ADJUSTMENT PROCEDURES

"Service Adjustment Procedures" are procedures for performing inspections and adjustments of particularly important locations with regard to the construction and for maintenance and servicing, but other inspections (for looseness, play, cracking, damage, etc.) must also be performed.

SERVICE PROCEDURES

The service steps are arranged in numerical order and attentions to be paid in performing vehicle service are described in detail in SERVICE POINTS.

TROUBLESHOOTING

Troubleshootings are classified into master troubleshooting and group troubleshooting and located as follows:
The master troubleshooting is prepared when the trouble symptom relates to two or more groups and given in MASTER TROUBLESHOOTING.
The group troubleshooting guide is prepared for causes of problems related to that individual group only; a troubleshooting guide is prepared for each appropriate group.

DEFINITION OF TERMS

STANDARD VALUE

Indicates the value used as the standard for judging the quality of a part or assembly on inspection or the value to which the part or assembly is corrected and adjusted. It is given by tolerance.

LIMIT

Shows the standard for judging the quality of a part or assembly on inspection and means the maximum or minimum value within which the part or assembly must be kept functionally or in strength.
It is a value established outside the range of standard value.

REFERENCE VALUE

Indicates the adjustment value prior to starting the work (presented in order to facilitate assembly and adjustment procedures, and so they can be completed in a shorter time).

CAUTION

Indicates the presentation of information particularly vital to the worker during the performance of maintenance and servicing procedures in order to avoid the possibility of injury to the worker; or damage to component parts, or a reduction of component or vehicle function or performance, etc.

INDICATION OF TIGHTENING TORQUE

The tightening torque shown in this manual is a basic value with a tolerance of ±10% except the following cases when the upper and lower limits of tightening torque are given.

(1) The tolerance for the basic value is within ±10%.
(2) Special bolts or the like are in use.
(3) Special tightening methods are used.

MODEL INDICATIONS

The following abbreviations are used in this manual for classification of model types.

M/T : Indicates the manual transmission, or models equipped with the manual transmission.
A/T : Indicates the automatic transmission, or models equipped with the automatic transmission.
M.P.I. : Indicates the multi-point injection, or engines equipped with the multi-point injection.
A/C : Indicates the air conditioner.

EXPLANATION OF MANUAL CONTENTS

Indicates procedures to be performed before the work in that section is started, and procedures to be performed after the work in that section is finished.

Maintenance and Servicing Procedures

(1) A diagram of the component parts is provided near the front of each section in order to give the reader a better understanding of the installed condition of component parts.
(2) The numbers provided within the diagram indicate the sequence for maintenance and servicing procedures; the symbol N indicates a non-reusable part; the tightening torque is provided where applicable.

- Removal steps:
  The part designation number corresponds to the number in the illustration to indicate removal steps.
- Disassembly steps:
  The part designation number corresponds to the number in the illustration to indicate disassembly steps.
- Installation steps:
  Specified in case installation is impossible in reverse order of removal steps.
  Omitted if installation is possible in reverse order of removal steps.
- Reassembly steps:
  Specified in case reassembly is impossible in reverse order of disassembly steps.
  Omitted if reassembly is possible in reverse order of disassembly steps.

Classifications of Major Maintenance/Service Points

When there are major points relative to maintenance and servicing procedures (such as essential maintenance and service points, maintenance and service standard values, information regarding the use of special tools, etc.), these are arranged together as major maintenance and service points and explained in detail.

◆▶ : Indicates that there are essential points for removal or disassembly.
▶◆ : Indicates that there are essential points for installation or reassembly.

Indicates (by symbols) where lubrication is necessary. In this example, multipurpose grease is to applied (where indicated) to the knuckle.

Symbols for Lubrication, Sealants and Adhesives

Information concerning the locations for lubrication and for application of sealants and adhesives is provided, by using symbols, in the diagram of component parts or on the page following the component parts page, and explained.


: Grease
(multipurpose grease unless there is a brand or type specified)


: Sealant or adhesive


: Brake fluid, automatic transmission fluid or air conditioner compressor oil


: Engine oil or gear oil


: Adhesive tape or butyl rubber tape

TSB Revision

Indicates the group number.

Indicates the page number.

Indicates the group title.

Indicates the section title.

26-22 FRONT AXLE – Knuckle

KNUCKLE

REMOVAL AND INSTALLATION

E26NA--

Pre-removal and post-installation Operation
- Removal and installation of the front hub (Refer to P. 26-12.)

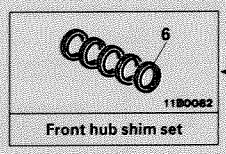

Front hub shim set

Repair kit or set parts are shown. (Only very frequently used parts are shown.)

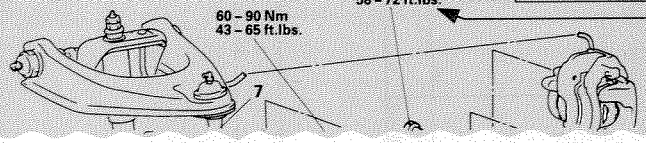

Denotes tightening torque

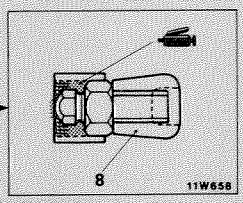

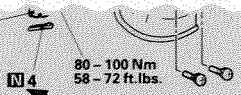

Denotes non-reusable part

Removal steps
1. Dust cover
2. Split pin
3. ◆◆ Connection for tie rod assembly and knuckle
4. Split pin
5. ◆◆ Connection for lower ball joint and knuckle
6. Split pin
7. ◆◆ Connection for upper ball joint and knuckle
8. Knuckle

Operating procedures, cautions, etc. on removal, installation, disassembly and reassembly are described.

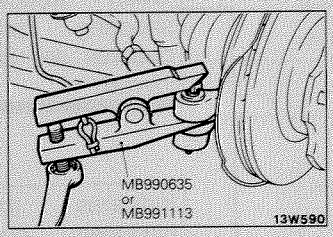

SERVICE POINTS OF REMOVAL

E26NBAE

3. DISCONNECTION OF TIE ROD ASSEMBLY AND KNUCKLE

Caution
1. **Use cord to bind the special tool closely so it won't become separated.**
2. **The nut should be loosened only, not removed.**

This number corresponds to the number appearing in "Removal steps", "Disassembly steps", "Installation steps" or "Reassembly steps".

26-42 FRONT AXLE – Differential Carrier

LUBRICATION, SEALING AND ADHESION POINTS

The title of the page (following the page on which the diagram of component parts is presented) indicating the locations of lubrication and sealing procedures.

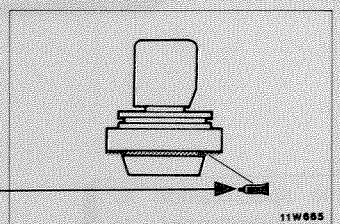

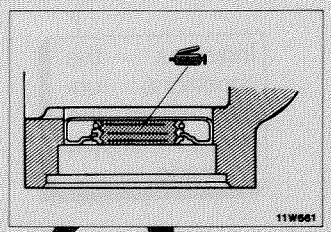

Sealant :
3M ATD Part No. 8661, No. 8663 or equivalent

<2 pinion>

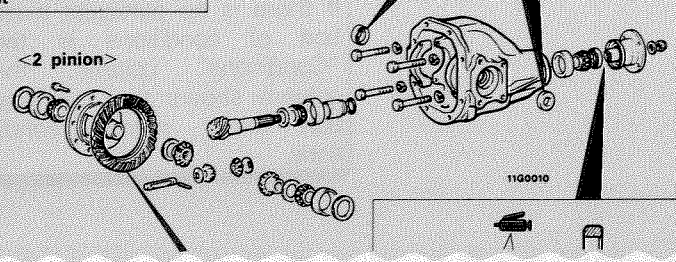

TSB Revision

EXPLANATION OF THE TROUBLESHOOTING GUIDE

Indicates the circuit diagram for checking (including the interface of the air conditioner control unit).

Indicates connector's terminal number.

Provides the necessary description of circuit operation for basic understanding.

Indicates the check to be made.

Provides hints (including standards for judgement) when troubleshooting procedures are followed.

Indicates the diagnosis output code No. and the system conditions during output.

Indicates the terminals to be checked.

Indicates the conditions under which the check should be made.

Indicates the specification to be used for judgement of the check results.
If there is no particular mention of conditions in the "Conditions" column, the column shows the specification under normal conditions.

6-1. CHECKING THE STOP LIGHT SWITCH CIRCUIT

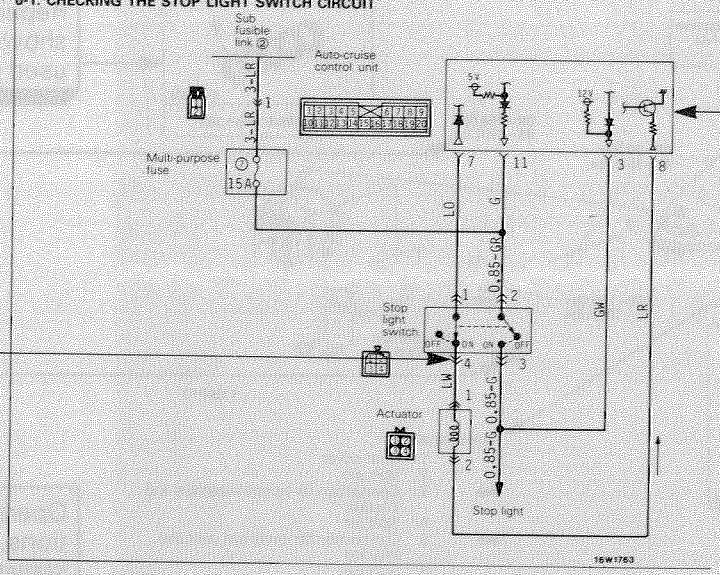

Description of operation

When the brake pedal is depressed during constant-speed travel, the stop light switch's (NC) contacts for the cruise-control system open, with the result that the current to the electromagnetic clutch of the actuator is interrupted, thus cancelling the constant-speed travel.
At the same time, moreover, the closing of the (NO) contacts for the stop light switch results in the sending of the cancel signal to the control unit, so that the actuator's electromagnetic clutch current is discontinued within the control unit, thereby canceling the constant-speed travel.
The flow of current is from the battery to the stop light switch, and the control unit.

Troubleshooting hint

Diagnosis–No. 16 (automatically cancelled)

Auto-cruise control unit terminal voltage

Terminal No.	Signal	Conditions	Terminal voltage
3	Stop light switch (load side)	When the brake pedal is depressed	12V
		When the brake pedal is not depressed	0V
11	Stop light switch (power supply side)	At all times	12V

TSB Revision

EXPLANATION OF CIRCUIT DIAGRAMS

The symbols used in circuit diagrams are used as described below.

NOTE
For detailed information concerning the reading of circuit diagrams, refer to Volume-2 "Electrical".

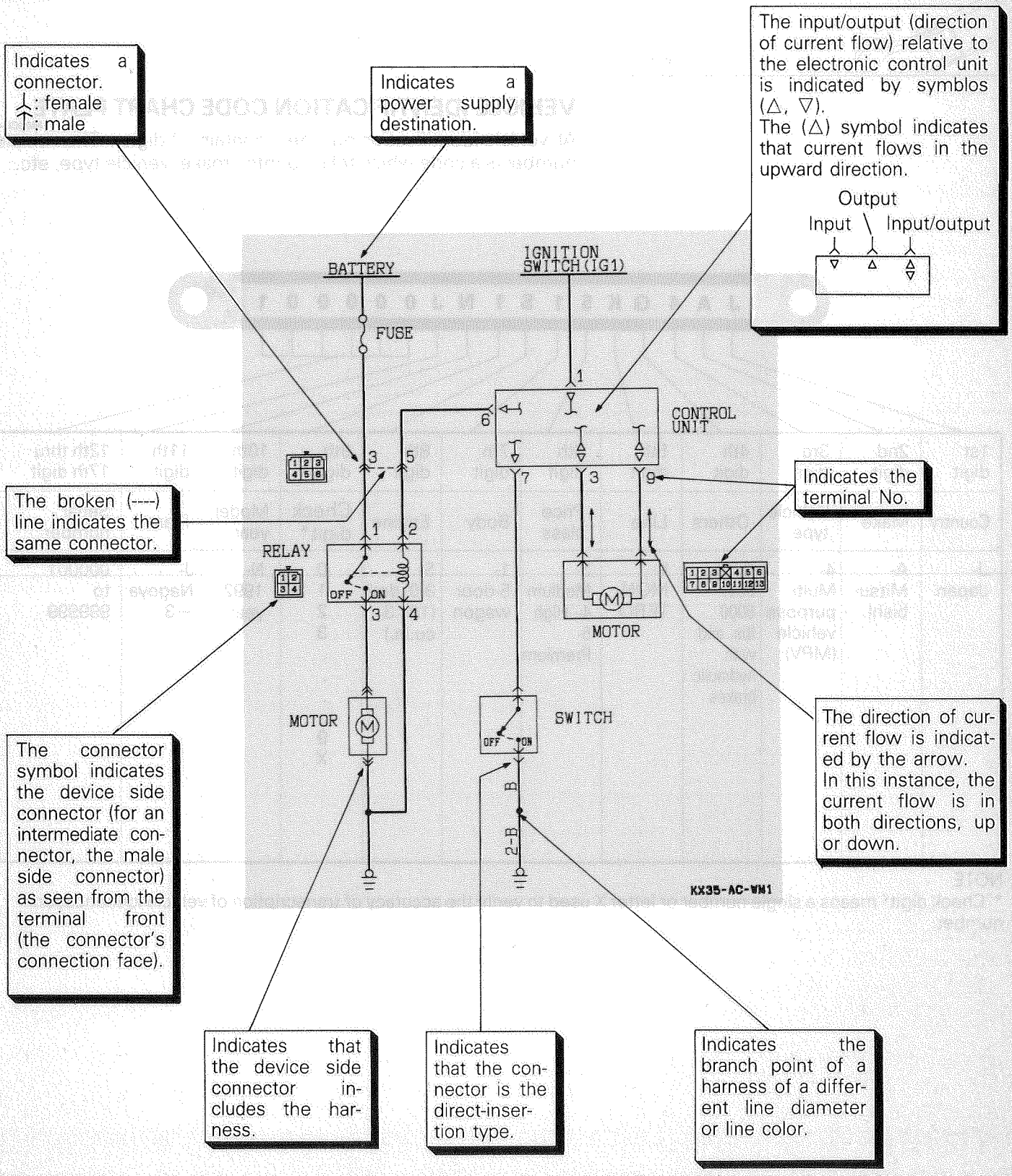

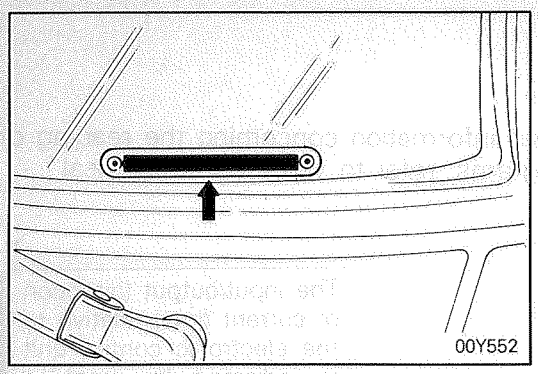

VEHICLE IDENTIFICATION

VEHICLE IDENTIFICATION NUMBER LOCATION

M00CA--

The vehicle identification number (V.I.N.) is located on a plate attached to the left top side of the instrument panel.

VEHICLE IDENTIFICATION CODE CHART PLATE

M00CB--

All vehicle identification numbers contain 17 digits. The vehicle number is a code which tells country, make, vehicle type, etc.

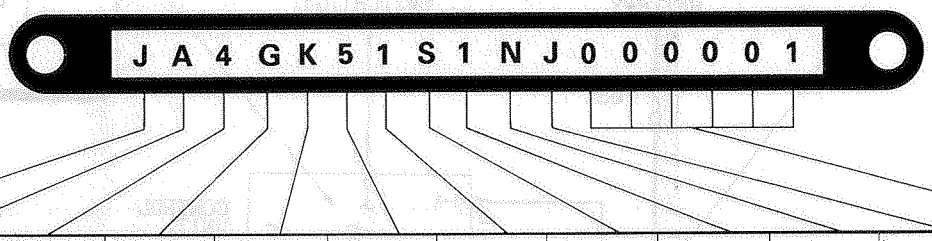

1st digit	2nd digit	3rd digit	4th digit	5th digit	6th digit	7th digit	8th digit	9th digit	10th digit	11th digit	12th thru 17th digit
Country	Make	Vehicle type	Others	Line	Price class	Body	Engine	Check digit*	Model year	Plant	Serial number
J-Japan	A-Mitsubishi	4-Multi-purpose vehicle (MPV)	G-5001-6000 lbs. and with hydraulic brakes	K-MONTERO	3-Medium 4-High 5-Premium	1-5-door wagon	S-3.0 dm^3 (181.3 cu.in.)	0 1 2 3 . . . . . 9 X	N-1992 year	J-Nagoya –3	000001 to 999999

NOTE
*"Check digit" means a single number or letter X used to verify the accuracy of transcription of vehicle identification number.

VEHICLE IDENTIFICATION NUMBER LIST

M00CC--

FEDERAL

VIN (except sequence number)	Brand	Engine displacement	Model code
JA4GK31S□NJ	MITSUBISHI MONTERO	2,972 dm³ (181.3 cu.in.)	V43VNDEL2M
			V43VRDEL2M
			V43WNDEL2M
			V43WRDEL2M
JA4GK41S□NJ			V43WNHEL2M
			V43WRHEL2M
JA4GK51S□NJ			V43WGRXEL2M

CALIFORNIA (Can also be sold in Federal states.)

VIN (except sequence number)	Brand	Engine displacement	Model code
JA4GK31S□NJ	MITSUBISHI MONTERO	2,972 dm³ (181.3 cu.in.)	V43VNDEL7M
			V43VRDEL7M
			V43WNDEL7M
			V43WRDEL7M
JA4GK41S□NJ			V43WNHEL7M
			V43WRHEL7M
JA4GK51S□NJ			V43WGRXEL7M

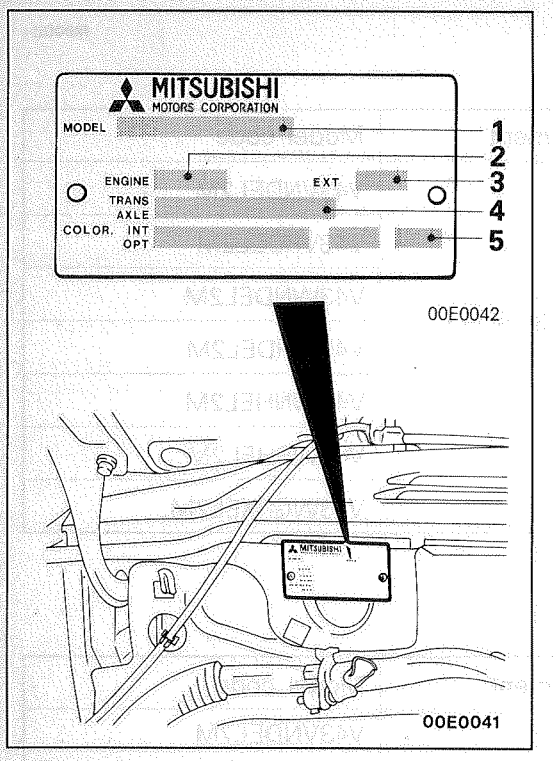

VEHICLE INFORMATION CODE PLATE M00CD--

Vehicle information code plate is riveted on the cowl top outer panel in the engine compartment.

The plate shows model code, engine model, transmission model, and body color code.

1. MODEL

V43WG RXEL2M

Model series
Vehicle model

2. ENGINE

6G72

Engine model

3. EXT

CA6

Exterior code

4. TRANSAXLE

V4AW2 4875

Final gear ratio
Transmission model

5. COLOR, INT
OPT

R25 87V 03V

Equipment code
Interior color code
Body color code

For monotone color vehicles, the body color code shall be indicated. For two-tone or three-way two-tone vehicles, each color code only shall be indicated in series.

CHASSIS NUMBER

STAMPING LOCATION M00CE--

The chassis number is stamped on the side of the frame near the right rear wheel.

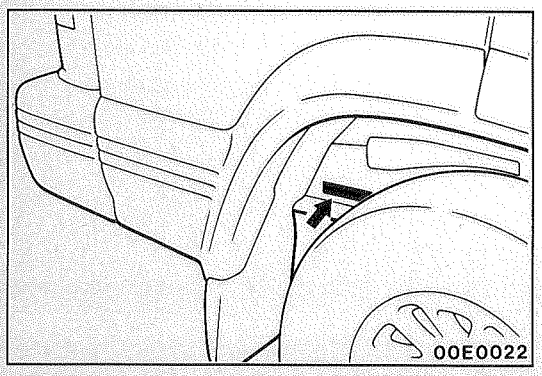

CHASSIS NUMBER CODE CHART

V43 W NJ000001

Vehicle line	Body type	
V43 – MONTERO	V – Van W – Wagon	Refer to 10th thru 17th digits of V.I.N. plate

TSB Revision

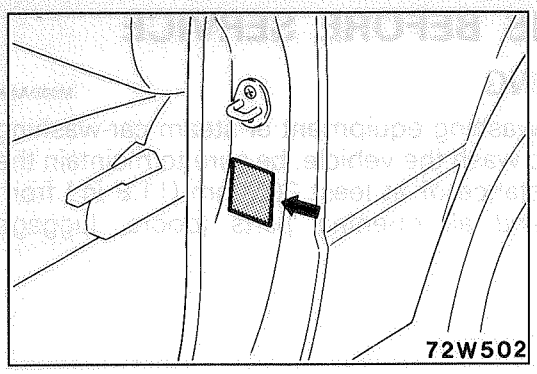

VEHICLE SAFETY CERTIFICATION LABEL M00CF--

The vehicle safety certification label is attached to face of left door pillar.
This label indicates the month and year of manufacture, Gross Vehicle Weight Rating (G.V.W.R.), front and rear Gross Axle Weight Rating (G.A.W.R.), and Vehicle Identification Number (V.I.N.).

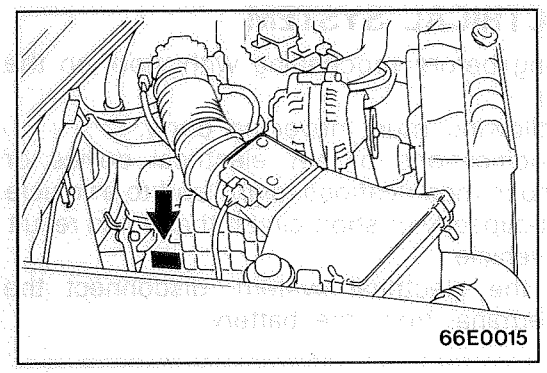

ENGINE MODEL STAMPING M00CG--

The engine model is stamped at the right rear of the top of the cylinder block.

These engine model numbers are as shown in the following.

Engine model	Engine displacement
6G72	2.972 dm³ (181.3 cu.in.)

The engine serial number is stamped near the engine model number, and the serial number cycles, as shown below.

Engine serial number	Number cycling
AA0201 to YY9999	AA0201 ---------> AA9999 AB0001 ---------> AZ9999 BA0001 ---------> ZZ9999

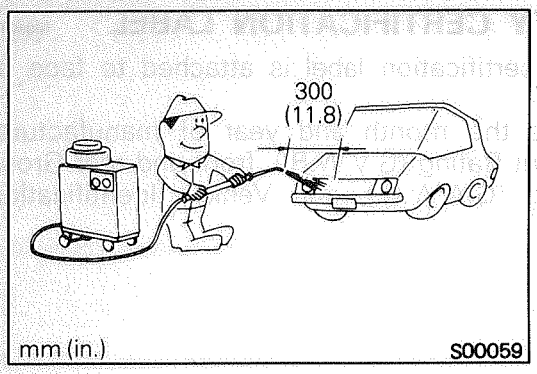

PRECAUTIONS BEFORE SERVICE

VEHICLE WASHING

M00DAAN

If high-pressure car-washing equipment or steam car-washing equipment is used to wash the vehicle, be sure to maintain the spray nozzle at a distance of at least 300 mm (11.8 in.) from any plastic parts and all opening parts (doors, luggage compartment, etc.).

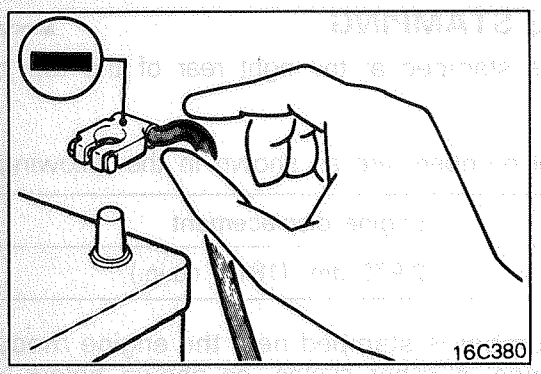

SERVICING ELECTRICAL SYSTEM

1. Note the following before proceeding with work on the electrical system.
   Note that the following must never be done:
   Unauthorized modifications of any electrical device or wiring, because such modifications might lead to a vehicle malfunction, over-capacity or short-circuit that could result in a fire in the vehicle.
2. When servicing the electrical system, disconnect the negative cable terminal from the battery.

Caution

1. **Before connecting or disconnecting the negative cable, be sure to turn off the ignition switch and the lighting switch.**
   (If this is not done, there is the possibility of semiconductor parts being damaged.)
2. **After completion of the work steps [when the battery's negative (–) terminal is connected], warm up the engine and allow it to idle for approximately five minutes under the conditions described below, in order to stabilize engine control conditions, and then check to be sure that the idling is satisfactory.**

Engine coolant temperature : 85°–95°C (185–203°F)
Lights, accessories : OFF
Transmission : neutral position
(Automatic transmission models: "N" or "P")
Steering wheel : neutral (center) position

TREATMENT BEFORE/AFTER THE FORDING OF A STREAM

M00FA--

INSPECTION AND SERVICE BEFORE FORDING A STREAM

Vehicles which are driven through water, or which may possibly be driven through water, should be subjected to the following inspections and maintenance procedures in advance.

- Seal the speedometer cable with a water-resistant grease or tape.
- Inspect the dust boots and breather hose for cracks or damage, and replace them if cracks or damage are found.

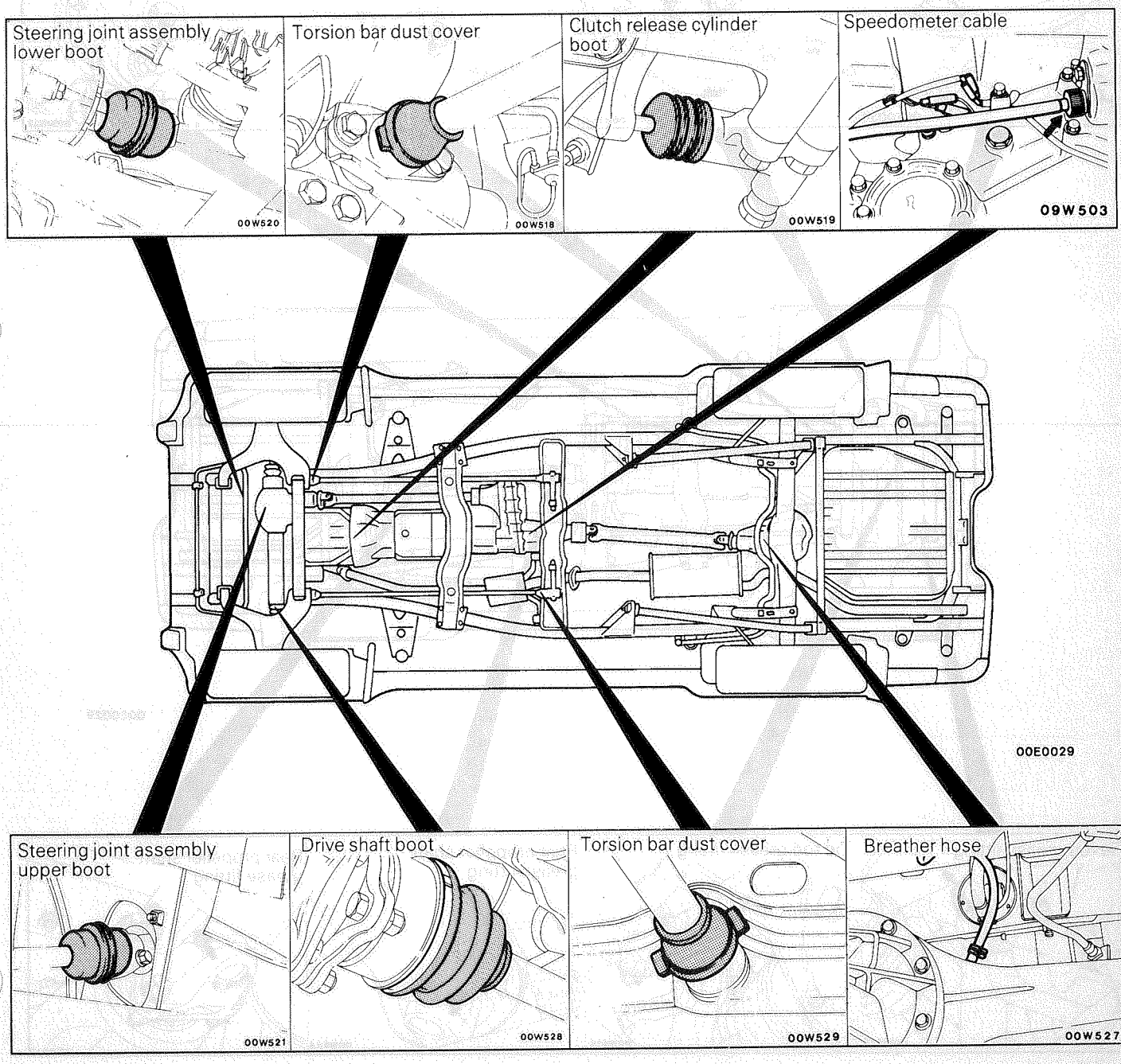

- Apply grease to the lubricating points of the front suspension, steering linkage and propeller shaft.

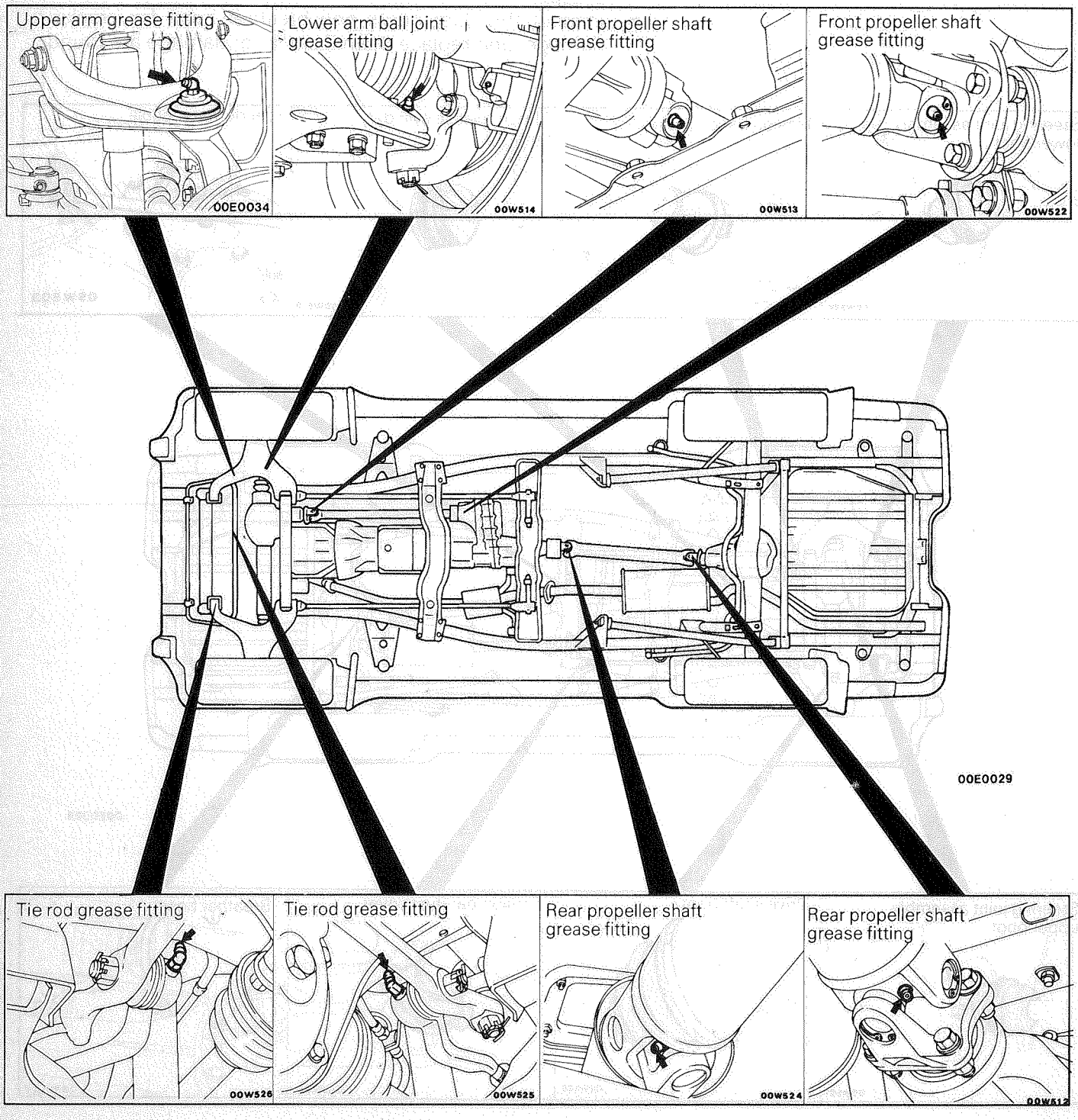

INSPECTION AND SERVICE AFTER FORDING A STREAM

After fording a stream, check the following points. If abnormal condition is evident, clean, replace or lubricate.

- Check for water, mud, sand, etc. in the rear brake drum, clutch housing, starter motor, brake pipe and fuel pipe.
- Check for water in the fluid or oil inside the front differential, rear differential, transmission and transfer.
- Apply grease to the lubricating points of the front suspension, steering linkage and propeller shaft.
- Check all boots and breather hoses for cracks and damage.

Caution
Check to be sure that there are no water and mud entering from each component connection.

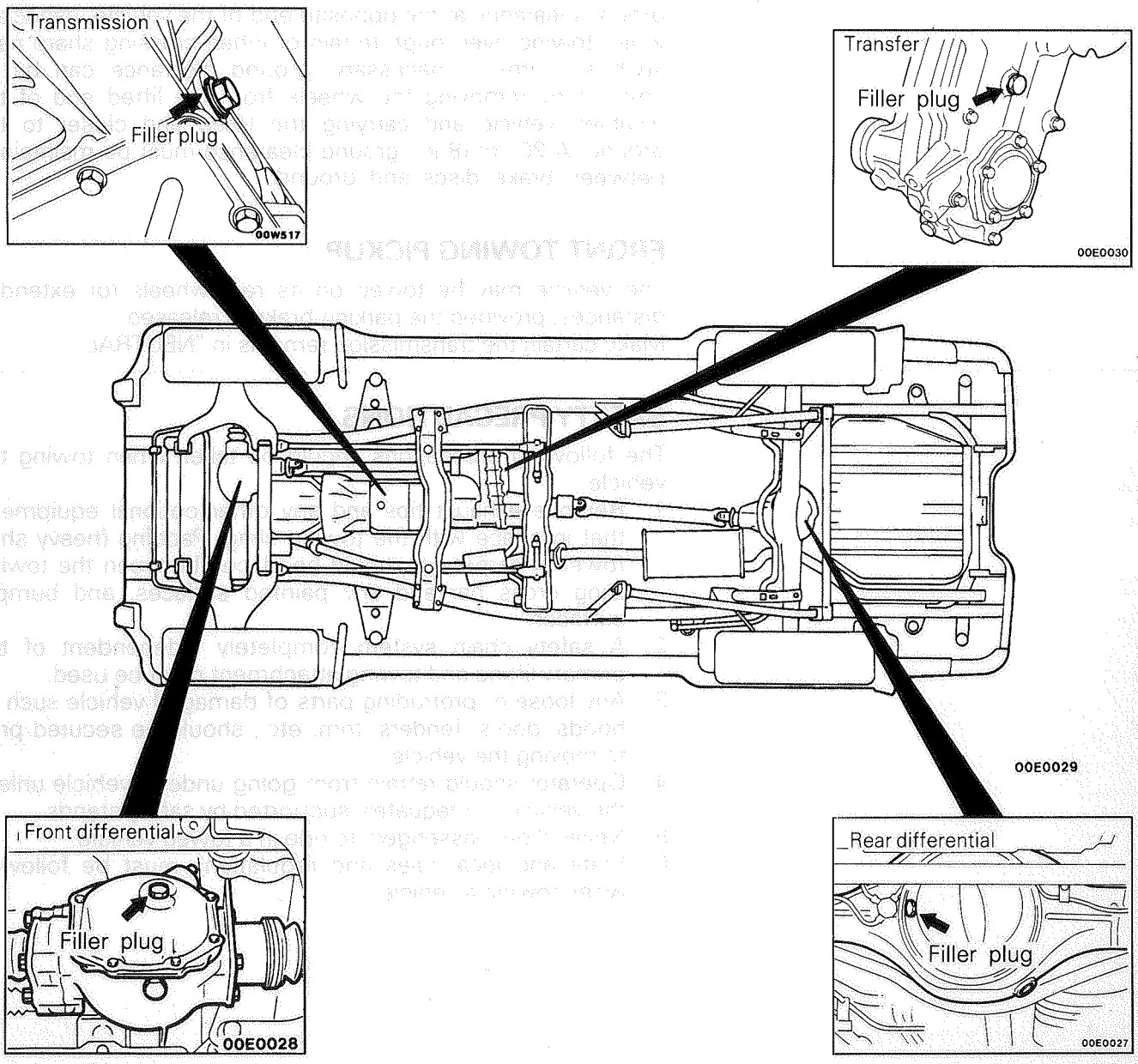

TSB Revision

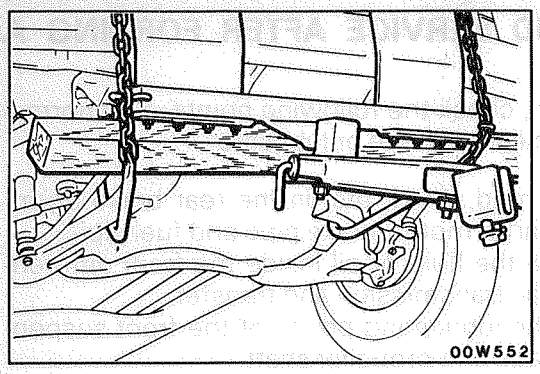

TOWING AND HOISTING

M00GA--

This vehicle can only be towed from the front with conventional sling-type equipment and tow chain with grab hooks.
If a vehicle is towed from the rear, use a tow dolly.
A lumber spacer (4" x 4" x 55" wood beam) should be placed forward of under guard and under towing hook/shipping tie down hook.
Then, attach J-hook to the lower arm.
A safety chain system must be used. This system must be completely independent of the primary lifting and towing attachment. Care must be taken in the installation of safety chains to insure they do not cause damage to bumper, painted surfaces or lights.

LIFTING-GROUND CLEARANCE

Towed vehicle should be raised until wheels are a minimum of 10 cm (4 in.) from the ground. Be sure there is adequate ground clearance at the opposite end of the vehicle, especially when towing over rough terrain or when crossing sharp rises such as curbs. If necessary, ground clearance can be increased by removing the wheels from the lifted end of the disabled vehicle and carrying the lifted end closer to the ground. A 20 cm (8 in.) ground clearance must be maintained between brake discs and ground.

FRONT TOWING PICKUP

The vehicle may be towed on its rear wheels for extended distances, provided the parking brake is released.
Make cartain the transmission remains in "NEUTRAL".

SAFETY PRECAUTIONS

The following precautions should be taken when towing the vehicle.

1. Remove exhaust tips and any other optional equipment, that interface with the towing sling. Padding (heavy shop towel or carpeting) should be placed between the towing sling cross bar and any painted surfaces, and bumper surfaces.
2. A safety chain system completely independent of the primary lifting and towing attachment must be used.
3. Any loose or protruding parts of damaged vehicle such as hoods, doors, fenders, trim, etc., should be secured prior to moving the vehicle.
4. Operator should refrain from going under a vehicle unless the vehicle is adequately supported by safety stands.
5. Never allow passengers to ride in a towed vehicle.
6. State and local rules and regulations must be followed when towing a vehicle.

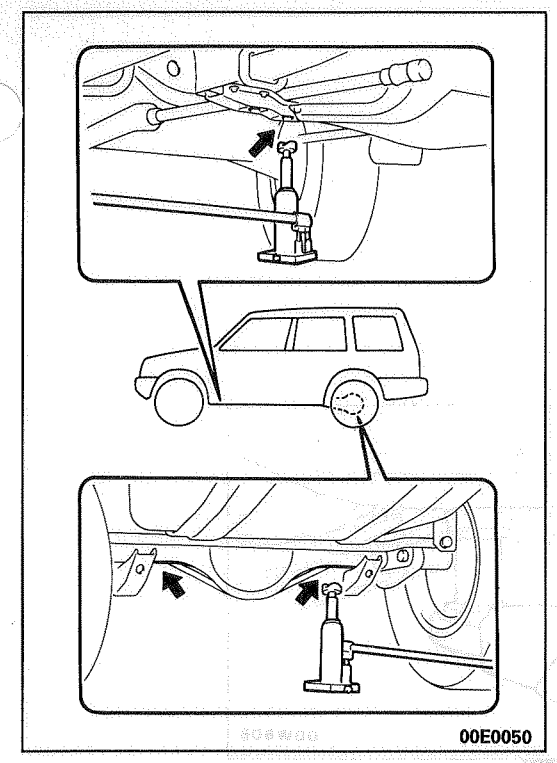
00E0050

HOISTING

EMERGENCY JACKING

Jack receptacles are located at the No. 2 crossmember and rear axle housing to accept the jack supplied with the vehicle for emergency road service. Always block the opposite wheels and jack only on a level surface.

Front

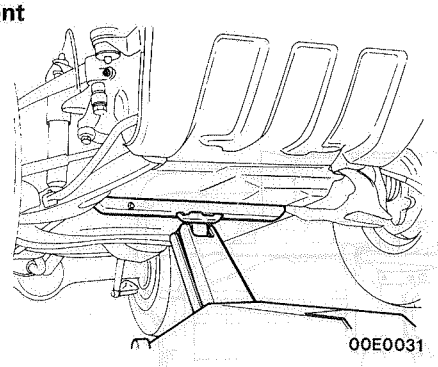
00E0031

Rear

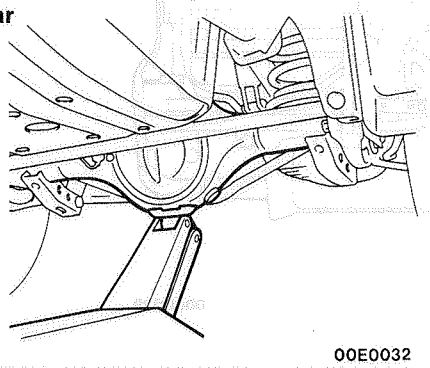
00E0032

FLOOR JACK

A regular floor jack may be used under the front crossmember or rear axle housing.

Caution

1. **A floor jack must never be used on any part of the underbody.**
2. **Do not attempt to raise one entire side of the vehicle by placing a jack midway between front and rear wheels. This practice may result in permanent damage to the body.**

POST TYPE

Special care should be taken when raising the vehicle on a frame contact type hoist. The hoist must be equipped with the proper adapters in order to support the vehicle at the proper locations. (Shown in the illustration)
Conventional hydraulic hoists may be used after determining that the adapter plates will make firm contact with the side frame.

Caution

When service procedures require removing rear suspension, fuel tank or spare tire place additional weight on rear end of vehicle or anchor vehicle to hoist to prevent tipping of center of gravity changes.

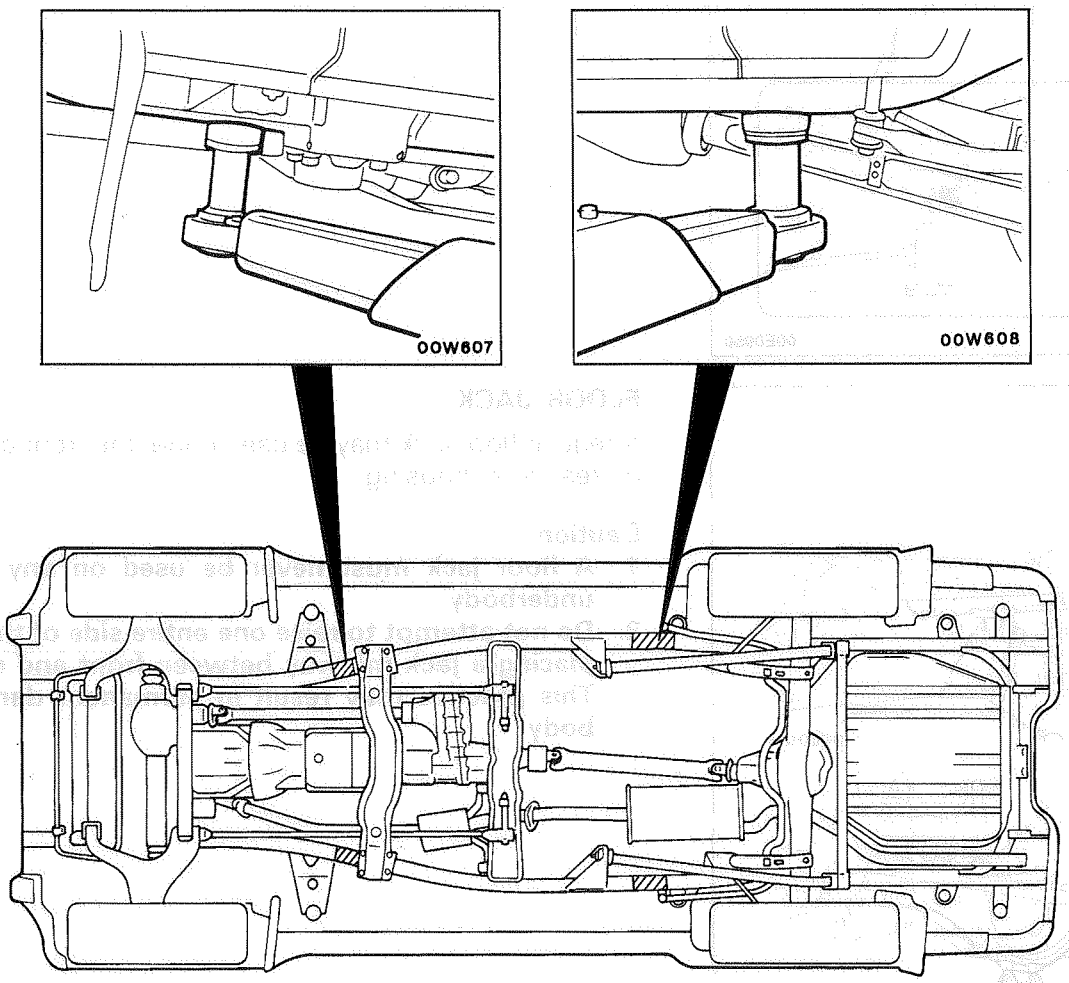
00W607
00W608
00E0029

GENERAL DATA AND SPECIFICATIONS

M00HA--

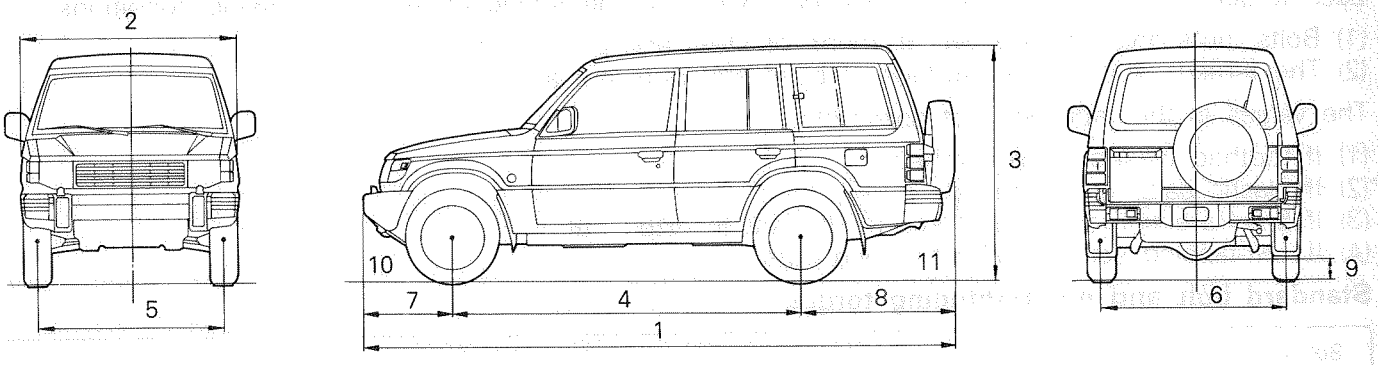

00E0040

Description \ Models		Medium-line	High-line	Premium-line
Vehicle dimensions mm (in.)				
Overall length	1	4,705 (185.2)	4,705 (185.2)	4,740 (186.6)
Overall width	2	1,695 (66.7)	1,695 (66.7)	1,785 (70.3)
Overall height	3	1,865 (73.4)	1,865 (73.4)	1,880 (74.0)
Wheelbase	4	2,725 (107.3)	2,725 (107.3)	2,725 (107.3)
Tread				
Front	5	1,420 (55.9)	1,420 (55.9)	1,465 (57.7)
Rear	6	1,435 (56.5)	1,435 (56.5)	1,480 (58.3)
Overhang				
Front	7	720 (28.3)	720 (28.3)	720 (28.3)
Rear	8	1,260 (49.6)	1,260 (49.6)	1,295 (51.0)
Minimum running ground clearance	9	205 (80.7)	205 (80.7)	225 (88.6)
Angle of approach	10	40.0°	40.0°	42.0°
Angle of departure	11	26.0°	26.0°	27.0°
Vehicle weights kg (lbs.)				
Curb weight		M/T: 1,875 (4,133) A/T: 1,870 (4,122)	M/T: 1,885 (4,155) A/T: 1,880 (4,144)	1,915 (4,221)
Gross vehicle weight rating		2,600 (5,732)	2,600 (5,732)	2,600 (5,732)
Gross axle weight rating				
Front		1,200 (2,645)	1,200 (2,645)	1,200 (2,645)
Rear		1,650 (3,637)	1,650 (3,637)	1,650 (3,637)
Seating capacity		5		
Engine				
Model No.		6G72		
Piston displacement dm³ (cu.in.)		2,972 (181.3)		
Transmission & transfer				
Model No. & Type		M/T: V5MT1 – 5-speed manual A/T: V4AW2 – 4-speed automatic		
Fuel system				
Fuel supply system		MPI		

TSB Revision

TIGHTENING TORQUE

M00JA--

Each torque value in the table is a standard value for tightening under the following conditions.
(1) Bolts, nuts and washers are all mode of steel and plated with zinc.
(2) The threads and bearing surface of bolts and nuts are all in dry condition.

The values in the table are not applicable:
(1) If toothed washers are inserted.
(2) If plastic parts are fastened.
(3) If bolts are tightened to plastic or die-cast inserted nuts.
(4) If self-tapping screws or self-locking nuts are used.

Standard bolt and nut tightening torque

Bolt nominal diameter (mm)	Pitch (mm)	Torque Nm (ft.lbs.)		
		Head mark ⟨4⟩	Head mark ⟨7⟩	Head mark ⟨8⟩
M5	0.8	2.5 (1.8)	5.0 (3.6)	6.0 (4.3)
M6	1.0	5.0 (3.6)	9.0 (6.5)	10 (7.2)
M8	1.25	12 (8.7)	22 (16)	25 (18)
M10	1.25	24 (17)	45 (33)	53 (38)
M12	1.25	42 (30)	83 (60)	98 (71)
M14	1.5	73 (53)	140 (101)	160 (116)
M16	1.5	113 (82)	210 (152)	240 (174)
M18	1.5	170 (123)	310 (224)	350 (253)
M20	1.5	230 (166)	420 (304)	490 (354)
M22	1.5	310 (224)	570 (412)	660 (477)
M24	1.5	400 (289)	750 (542)	870 (629)

Flange bolt and nut tightening torque

Bolt nominal diameter (mm)	Pitch (mm)	Torque Nm (ft.lbs.)		
		Head mark ⟨4⟩	Head mark ⟨7⟩	Head mark ⟨8⟩
M6	1.0	5.0 (3.6)	10 (7.2)	12 (8.7)
M8	1.25	13 (9.4)	24 (17)	28 (20)
M10	1.25	26 (19)	50 (36)	58 (42)
M10	1.5	24 (17)	45 (33)	55 (40)
M12	1.25	47 (34)	95 (69)	105 (76)
M12	1.75	43 (31)	83 (60)	98 (71)

Taper thread tightening torque

Thread size	Torque Nm (ft.lbs.)	
	Female thread material: Light alloy	Female thread material: Steel
NPTF 1/6	7.0 (5.1)	10 (7.2)
PT 1/8	10 (7.2)	18 (13)
PT 1/4, NPTF 1/4	25 (18)	40 (29)
PT 3/8	48 (35)	68 (49)

NOTE: NPTF is dry seat pipe thread, while PT is pipe thread.

TSB Revision

MASTER TROUBLESHOOTING

M00KAAGa

ENGINE OVERHEATS

Symptom	Probable cause	Reference page or remedy
Engine overheats	Cooling system faulty	14-4
	Incorrect ignition timing	16-26 to 36

ENGINE WILL NOT CRANK OR CRANKS SLOWLY

Symptom	Probable cause	Reference page or remedy
Engine will not crank or cranks slowly	Starting system faulty	16-17

ENGINE WILL NOT START OR BE HARD TO START (CRANKS OK)

Symptom	Probable cause	Reference page or remedy
Engine will not start or be hard to start (Cranks OK)	No fuel supply to fuel injection system	13-15
	Fuel injection system problems	13-15
	Ignition system problems	16-26 to 36
	Vacuum leaks • Purge control valve hose • Vacuum hoses • Intake manifold • Air intake plenum • Throttle body	Repair as necessary
	Compression too low	11-7

ROUGH IDLE OR ENGINE STALL

Symptom	Probable cause	Reference page or remedy
Rough idle or engine stalls	Vacuum leaks • Purge control valve hose • Vacuum hoses • Intake manifold • Air intake plenum • Throttle body	Repair as necessary
	Ignition system problems	16-26 to 36
	Idle speed set too low	13-26
	Fuel injection system problems	13-15
	Engine overheats	14-4
	Compression too low	11-7

ENGINE HESITATES OR POOR ACCELERATION

Symptom	Probable cause	Reference page or remedy
Engine hesitates or poor acceleration	Ignition system problem	16-26 to 36
	Vacuum leaks ● Purge control valve hose ● Vacuum hoses ● Intake manifold ● Air intake plenum ● Throttle body	Repair as necessary
	Air cleaner clogged	00-35
	Fuel line clogged	13-101
	Fuel injection system problem	13-15
	Emission control system problem	17-3
	Engine overheats	14-4
	Compression too low	11-7

ENGINE DIESELING

Symptom	Probable cause	Reference page or remedy
Engine dieseling (runs after ignition switch is turned off)	Incorrect ignition timing	16-26 to 36

EXCESSIVE OIL CONSUMPTION

Symptom	Probable cause	Reference page or remedy
Excessive oil consumption	Oil leak	Repair as necessary
	Positive crankcase ventilation line clogged	00-35
	Valve stem seal worn or damaged	Replace
	Valve stem worn	Replace

POOR FUEL MILEAGE

Symptom	Probable cause	Reference page or remedy
Poor fuel mileage	Fuel leak	Repair as necessary
	Ignition problems	16-26 to 36
	Fuel injection system problems	13-15
	Compression too low	11-7
	Tires improperly inflated	31-4
	Clutch slips	Repair as necessary
	Brakes drag	35-42

NOISE

Symptom	Probable cause	Reference page or remedy
Noise	Loose bolts and nuts	Retighten as necessary
	Engine noise	11-4

HARD STEERING

Symptom	Probable cause	Reference page or remedy
Hard steering	Loose power steering oil pump belt	37-11
	Low fluid level	37-11
	Air in power steering system	37-12
	Low tire pressure	31-4
	Excessive turning resistance of upper or lower ball joint	33-11
	Excessively tight linkage ball joint	37-37
	Improper front wheel alignment	33-11
	Excessive turning resistance of tie-rod ball joint	37-38
	No lubrication of tie-rod	Lubricate
	Sticky flow control valve	37-32
	No lubrication of idler arm	37-37

POOR RETURN OF STEERING WHEEL TO CENTER

Symptom	Probable cause	Reference page or remedy
Poor return of steering wheel to center	Improper front wheel alignment	33-11
	Improper tire pressure	31-4
	Damaged front wheel bearing	26-15

POOR RIDING

Symptom	Probable cause	Reference page or remedy
Poor riding	Improper tire pressure	31-4
	Imbalanced wheels	31-4
	Improper front or rear wheel alignment	33-11, 34-3
	Malfunctioning shock absorber	33-4
	Broken or worn stabilizer	33-20
	Broken or worn torsion bar spring	33-18
	Loose suspension securing bolts(s)	Retighten
	Worn lower arm bushing	33-17

ABNORMAL TIRE WEAR

Symptom	Probable cause	Reference page or remedy
Abnormal tire wear	Improper front or rear wheel alignment	33-11, 34-3
	Improper tire pressure	31-4
	Imbalanced wheels	31-4
	Loose wheel bearings	26-15
	Malfunctioning shock absorber	33-4

ROAD WANDER

Symptom	Probable cause	Reference page or remedy
Road wander	Improper front or rear wheel alignment	33-11, 34-3
	Excessive play of steering wheel	37-7
	Poor turning resistance of upper ball joint	33-11
	Improper tire pressure	31-4
	Loose or worn lower arm or upper arm bushing	33-13, 17
	Loose or worn wheel bearings	26-15

VEHICLE PULLS TO ONE SIDE

Symptom	Probable cause	Reference page or remedy
Vehicle pulls to one side	Improper front or rear wheel alignment	33-11, 34-3
	Imbalanced or worn tires	31-4
	Uneven tire pressure	31-4
	Excessive turning resistance of upper ball joint	33-13
	Wheel bearing seizure	26-15
	Broken or worn torsion bar spring	33-18
	Bend front axle drive shaft	26-19
	Deformed lower arm	33-17

STEERING WHEEL SHIMMY

Symptom	Probable cause	Reference page or remedy
Steering wheel shimmy	Improper front or rear wheel alignment	33-11, 34-3
	Improper tire pressure	31-4
	Imbalanced wheels	Repair
	Poor turning resistance of upper ball joint	33-13
	Excessive play of steering wheel	37-7
	Broken or weak stabilizer	33-20
	Worn lower arm or upper arm bushing	33-13, 7
	Malfunctioning shock absorber	33-4
	Broken or weak torsion bar spring or coil spring	33-18, 34-8
	Wear, play, or seizure of wheel bearing	26-15

BOTTOMING

Symptom	Probable cause	Reference page or remedy
Bottoming	Overloaded vehicle	Correct
	Broken or weak torsion bar spring or coil spring	33-18, 34-8
	Malfunctioning shock absorber	33-4

WHEEL BEARING TROUBLESHOOTING

Trouble	Symptom	Probable cause
Pitting	Pitting occurs because of uneven rotation of race and bearing surfaces	Excessive bearing preload Excessive load
Flaking	The surface peels because of uneven rotation of the race and bearing surfaces	End of bearing life Improper bearing assembly
Cracking	Chipping or cracking of cage or roller edges	Impact when bearing was installed (such as being hit with a hammer)
Flat spotting	When large load is applied, race and roller contact surfaces compress, forming indentations	Excessive bearing preload Excessive load Vibration when bearings are not used, such as during shipment on freight cars, transport trucks, etc.
Nicks	Instead of rolling along race surface, rollers slide, thus damaging surface	Improper grease Excessive bearing preload Excessive load Faulty oil seal
Smearing	Damage or wear caused by minute particles adhering to surfaces results in rough movement and such high temperatures that parts of surface melt	Excessive variation of loads on bearings Use of grease other than that specified Improper grease
Rust, corrosion	Appears on various areas of the bearing	Use of grease other than that specified Faulty oil seal Presence of water or moisture
Wear	Wear of surface areas caused by friction	Improper grease Foreign matter Rust or corrosion due to moisture Use of grease other than that specified Faulty oil eal
Discoloration	Grease discoloration results from grease deterioration which causes particles of pigment contained in grease to adhere to surfaces Heat discoloration will appear as a deep brown or purple	Use of grease other than that specified Faulty oil seal Excessive bearing preload Excessive load

LUBRICATION AND MAINTENANCE

M00PA--

Maintenance and lubrication service recommendations have been compiled to provide maximum protection for the vehicle owner's investment against all reasonable types of driving conditions. Since these conditions vary with the individual vehicle owner's driving habits, the area in which the vehicle is operated and the type of driving to which the vehicle is subjected, it is necessary to prescribe lubrication and maintenance service on a time frequency as well as mileage interval basis.

Oils, lubricants and greases are classified and graded according to standards recommended by the Society of Automotive Engineers (SAE), the American Petroleum Institute (API) and the National Lubricating Grease Institute (NLGI).

MAINTENANCE SCHEDULES

Information for service maintenance is provided under "SCHEDULED MAINTENANCE TABLE".

Three schedules are provided; one for "Required Maintenance", one for "General Maintenance" and one for "Severe Usage Service".

The item numbers in "SCHEDULED MAINTENANCE TABLE" correspond to the section numbers in "MAINTENANCE SERVICE"

SEVERE SERVICE

Vehicles operating under severe service conditions will require more frequent service.

Component service information is included in appropriate units for vehicles operaing under one or more of the following conditions:

1. Trailer towing or police, taxi, or commercial type operation.
2. Operation of Vehicle
   (1) Short-trip operation at freezing temperature (engine not thoroughly warmed up)
   (2) More than 50% operation in heavy city traffic during hot weather above 32°C (90°F)
   (3) Extensive idling
   (4) Driving in sandy areas
   (5) Driving in salty areas
   (6) Driving in dusty conditions
   (7) Driving on-off-road

ENGINE OIL

The SAE grade number indicates the viscosity of engine oils, for example, SAE 30, which is a single grade oil. Engine oils are also identified by a dual number, for example, SAE 10W-30, which indicates a multigrade oil.

The API classification system defines oil performance in terms of engine usage. Only engine oil designed "For Service SG" or "For Service SG/CD", when available, should be used. These oils contain sufficient chemical additives to provide maximum engine protection. Both the SAE grade and the API designation can be found on the container.

Caution

Test results submitted to EPA have shown that laboratory animals develop skin cancer after prolonged contact with used engine oil. Accordingly, the potential exists for humans to develop a number of skin disorders, including cancer, from such exposure to used engine oil.

Care should be taken, therefore, when changing engine oil, to minimize the amount and length of exposure time to used engine oil on your skin. Protective clothing and gloves, that cannot be penetrated by oil, should be worn. The skin should be thoroughly washed with soap and water, or use waterless hand cleaner, to remove any used engine oil. Do not use gasoline, thinners, or solvents.

GEAR LUBRICANTS

The SAE grade number also indicates the viscosity of Multi-Purpose Gear Lubricants.

The API classification system defines gear lubricants in terms of usage. Typical gear lubricants conforming to API GL-4 or GL-5 with a viscosity of SAE 80W, SAE 90 are recommended for manual transmission, front axle and rear axle (conventional differential), and MITSUBISHI genuine gear oil Part No. 8149630EX or equivalent, for rear axle (limited-slip differential).

LUBRICANTS–GREASES

Semi-solid lubricants bear the NLGI designation and are further classified as grades 0, 1, 2, 3 etc.. Whenever "Chassis Lubricant" is specified, Multi-Purpose Grease, NLGI grade No. 2, should be used.

FUEL USAGE STATEMENT

Your vehicle must be unleaded gasoline only. This vehicle has a fuel filler tube especially designed to accept only the smaller-diameter unleaded gasoline dispensing nozzle.

CAUTION

Using leaded gasoline in your car will damage the catalytic converter, and affect the warranty coverage validity.

Your vehicle is designed to operate on unleaded gasoline having a minimum octane rating of 87 or 91 RON (Research Octane Number).

GASOLINES CONTAINING ALCOHOL

Some gasolines sold at service stations contain alcohol although they may not be so identified. Use of fuels containing alcohol is not recommended unless the nature of the blend can be determined as being satisfactory.

Gasohol – A mixture of 10% ethanol (grain alcohol) and 90%, unleaded gasoline may be used in your vehicle. If driveability problems are experienced as a result of using gasohol, it is recommended that the vehicle be operated on gasoline.

Methanol – Do not use gasolines containing methanol (wood alcohol). Use of this type of alcohol can result in vehicle performance deterioration and damage critical parts in the fuel system components. Fuel system damage and performance problems, resulting from the use of gasolines containing methanol may not be covered by the new vehicle warranty.

GASOLINES CONTAINING MTBE (METHY TERTIARY BUTYL ETHER)

Unleaded gasoline containing 15% or less MTBE may be used in your vehicle. (Fuel containing MTBE over 15% vol. may cause reduced engine performance and produce vapor lock or hard starting.

MATERIALS ADDED TO FUEL

Indiscriminate use of fuel system cleaning agents should be avoided. Many of these materials intended for gum and varnish removal may contain highly active solvents or similar ingredients that can be harmful to gasket and diaphragm materials used in fuel system component parts.

RECOMMENDED LUBRICANTS AND LUBRICANT CAPACITIES TABLE

M00RA--

RECOMMENDED LUBRICANTS

Parts		Specifications	Remarks
Engine oil		API classification SG or SG/CD	For further details, refer to SAE viscosity number
Manual transmission		API classification GL-4 or higher	SAE grade number: SAE 75W-90 or 75W/85W
Automatic transmission		Dia ATF SP or MITSUBISHI PLUS ATF, or equivalent	–
Transfer		API classification GL-4 or higher	SAE grade number: SAE 75W-90 or 75W/85W
Front axle		API classification GL-5 or higher	For further details, refer to SAE viscosity number
Rear axle	Conventional differential	API classification GL-5 or higher	For further details, refer to SAE viscosity number
	Limited-slip differential	–	Mitsubishi Genuine Gear Oil Part No. 8149630EX or equivalent
Power steering		MITSUBISHI PLUS ATF/Automatic Transmission Fluid "DEXRON" or "DEXRON II"	–
Brakes and clutch		Conforming to DOT 3 or DOT 4	
Engine coolant		–	DIA-QUEEN LONG-LIFE COOLANT (Part No. 0103044) or HIGH QUALITY ETHYLENE GLYCOL ANTIFREEZE COOLANT
Door hinges, back door hinges		Engine oil	–

LUBRICANT CAPACITIES TABLE

Description		Specifications
Engine oil	dm^3 (qts.)	
Crankcase (except for oil filter and oil cooler)		4.3 (4.5)
Oil filter		0.3 (1/2)
Oil cooler		0.3 (1/2)
Cooling system (including front heater and coolant reserve tank)	dm^3 (qts.)	8.0 (8.5)
Manual transmission	dm^3 (qts.)	2.5 (2.6)
Automatic transmission	dm^3 (qts.)	7.2 (7.6)
Transfer	dm^3 (qts.)	2.3 (2.4)
Front axle	dm^3 (qts.)	1.2 (1.3)
Rear axle	dm^3 (qts.)	2.6 (2.7)
Power steering	dm^3 (qts.)	1.06 (1.12)
Fuel tank	dm^3 (gals.)	92 (24.3)

Anticipated barometric temperature range		SAE viscosity No.
°C	°F	
49	120	
38	100	
27	80	
16	60	
0	32	
−12	10	
−23	−10	
−29	−20	

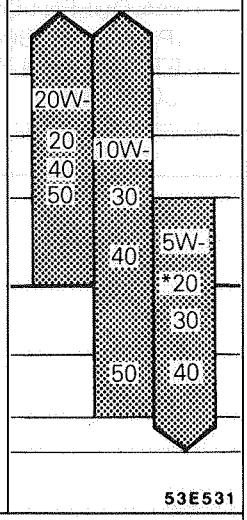

53E531

*SAE 5W-20 Not recommended for sustained high speed vehicle operation.

SELECTION OF LUBRICANTS

ENGINE OIL

Only those engine oils should be used which conform to the requirements of the API classification "For Service SG" or "For Service SG/CD", and have the proper SAE grade number for the expected temperature range.

Caution
Nondetergent or straight mineral oil must never be used.

Energy Conserving Oil

In order to improve fuel economy and conserve energy new, lower friction engine oils have been developed. These oils are readily available and can be identified by such labels as "Energy conserving", "Energy saving", "Improved fuel economy", etc.

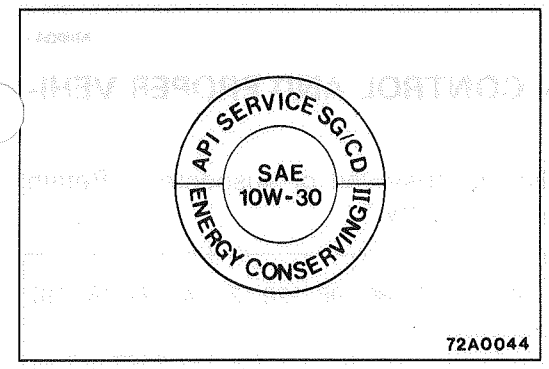

Oil Identification Symbol

A standard symbol appears on the top of oil containers and has three distinct areas for identifying various aspects of the oil. The top portion will indicate the quality of the oil. The center portion will show the SAE viscosity grade, such as SAE 10W–30. "Energy Conserving" shown in the lower portion, indicates that the oil has fuel-saving capabilities.

FRONT AXLE/REAR AXLE (CONVENTIONAL DIFFERENTIAL)

Lubricant	API classification GL-5 or higher
Anticipated temperature range	Viscosity range
Above –23°C (–10°F)	SAE 90 SAE 85W-90 SAE 80W-90
–20°C to –34°C (–10°F to –30°F)	SAE 80W SAE 80W-90
Below –34°C (–30°F)	SAE 75W

REAR AXLE (LIMITED-SLIP DIFFERENTIAL)

Refer to GROUP 27 – Specification.

COOLANT

Relation between Coolant Concentration and Specific Gravity

Coolant temperature °C (°F) and specific gravity					Freezing temperature °C (°F)	Safe operating temperature °C(°F)	Coolant concentration (Specific volume)
10 (50)	20 (68)	30 (86)	40 (104)	50 (122)			
1.054	1.050	1.046	1.042	1.036	–16 (3.2)	–11 (12.2)	30%
1.063	1.058	1.054	1.049	1.044	–20 (–4)	–15 (5)	35%
1.071	1.067	1.062	1.057	1.052	–25 (–13)	–20 (–4)	40%
1.079	1.074	1.069	1.064	1.058	–30 (–22)	–25 (–13)	45%
1.087	1.082	1.076	1.070	1.064	–36 (–32.8)	–31 –(23.8)	50%
1.095	1.090	1.084	1.077	1.070	–42 (–44)	–37 (–35)	55%
1.103	1.098	1.092	1.084	1.076	–50 (–58)	–45 (–49)	60%

Example
The safe operating temperature is – 15°C (5°F) when the measured specific gravity is 1.058 at the coolant temperature of 20°C (68°F).

Cautions

1. **If the concentration of the coolant is below 30%, the anti-corrosion property will be adversely affected. In addition, if the concentration is above 60%, both the anti-freeze and engine cooling properties will decrease, affecting the engine adversely. For these reasons, be sure to maintain the concentration level within the specified range.**
2. **Do not use a mixture of different brands of anti-freeze.**

SCHEDULED MAINTENANCE TABLE

M00QA--

SCHEDULED MAINTENANCE SERVICE FOR EMISSION CONTROL AND PROPER VEHICLE PERFORMANCE

Inspection and service should be performed any time a malfunction is observed or suspected. Retain receipts for all vehicle emission services to protect your emission warranty.

No.	Emission Control System Maintenance	Service intervals	Kilometers in Thousands	24	48	72	80	96	120	128	144	160	168	192
			Mileage in Thousands	15	30	45	50	60	75	80	90	100	105	120
1	Check Fuel System (Tank, Line, Connection and Fuel Filler Cap) for Leaks Every 5 Years	or					X					X		
2	Check Fuel Hoses and Vapor Hoses Every 2 Years	or		X				X			X			X
3	Replace Air Cleaner Element	at		X				X			X			X
4	Clean Crankcase Emission Control System (Positive Crankcase Ventilation Valve)*	or								X				
5	Check Evaporative Emission Control System (Except Canister) for Leaks and Clogging Every 5 Years*	or						X						X
6	Replace Canister*	at										X		
7	Replace Spark Plugs	at		X				X			X			X
8	Replace Ignition Cables Every 5 Years*	or						X						X
9	Replace Oxygen Sensor*	at								X				
10	Check Distributor Cap, Rotor and Spark Advancer System Every 5 Years*	or						X						X

NOTE
*: Except for California

GENERAL MAINTENANCE SERVICE FOR PROPER VEHICLE PERFORMANCE

No.	General Maintenance		Service Interval		Kilometers in Thousands	12	24	36	48	60	72	84	96
					Mileage in Thousands	7.5	15	22.5	30	37.5	45	52.5	60
11	Timing Belt		Replace	at									X
12	Drive Belt (for Water Pump and Alternator)		Check belt	at					X				X
13	Engine Oil		Change Oil Every 12 Months	or	X	X	X	X	X	X	X	X
14	Engine Oil Filter		Replace Every 12 Months	or		X		X		X		X
15	Manual Transmission and Transfer Oil		Check Oil Level	at				X				X
16	Automatic Transmission Fluid		Check Fluid Level Every 12 Months	or		X		X		X		X
17	Automatic Transmission and Transfer Fluid		Change Fluid	at				X				X
18	Engine Coolant		Change Coolant Every 2 Years	or				X				X
19	Disc Brake Pads		Inspect for Wear Every 12 Months	or		X		X		X		X
20	Brake Hoses		Check for Deterioration or Leaks Every 12 Months	or		X		X		X		X
21	Ball Joint and Steering Linkage Seals		Inspect for Grease Leaks and Damage Every 2 Years	or				X				X
22	Drive Shaft Boots		Inspect for Grease Leaks and Damage Every 12 Months	or		X		X		X		X
23	Ball Joints with Grease Fitting		Lubricate Grease Every 2 Years	or				X				X
24	Front Axle and Rear Axle	With LSD*	Change Oil	at				X				X
		Without LSD*	Inspect Oil Level	at				X				X
25	Propeller Shaft Joint		Lubricate Grease Every 2 Years	or				X				X
26	Exhaust System Connection Portion of Muffler, Pipings and Converter Heat Shields		Check and Service as Required Every 2 Years	or				X				X

NOTE
*: LSD-Limited-slip differential

SCHEDULED MAINTENANCE UNDER SEVERE USAGE CONDITIONS

The maintenance items should be performed according to the following table:

No.	Maintenance Item	Service to be Performed	Mileage Intervals Kilometers in Thousands (Miles in Thousands)				Severe Usage Conditions							
			24 (15)	48 (30)	72 (45)	96 (60)	A	B	C	D	E	F	G	H
3	Air Cleaner Element	Replace	More Frequently				X				X			
4	Crankcase Emission Control System	Check and Clean as Required	More Frequently				X							
7	Spark Plugs	Replace at	X	X	X	X		X		X				
13	Engine Oil	Change Every 3 Months or	Every 4,800 km (3,000 miles)				X	X	X	X			X	
14	Engine Oil Filter	Replace Every 6 Months or	Every 9,600 km (6,000 miles)				X	X	X	X			X	
17	Manual Transmission and Transfer	Change oil at		X		X		X					X	X
19	Disc Brake Pads	Inspect for Wear	More Frequently				X					X		

Severe usage conditions

A–Driving in dusty conditions
B–Trailer towing, or police, taxi, or commercial type operation
C–Extensive idling
D–Short-trip operation at freezing temperatures (engine not thoroughly warmed up)
E–Driving in sandy areas
F–Driving in salty areas
G–More than 50% operation in heavy city traffic during hot weather above 32°C (90°F)
H–Driving on off-road

TSB Revision

MAINTENANCE SERVICE

1. FUEL SYSTEM (Check for leaks) M00SAGAb

TANK, LINES, CONNECTIONS AND FUEL FILLER CAP

1. Check for damage or leakage in the fuel lines and connections.
2. Inspect the surface of fuel hoses for heat and mechanical damage. Hard and brittle rubber, cracking, checking, tears, cuts, abrasions and excessive swelling indicate deterioration of the rubber.
3. If the fabric casing of the rubber hose is exposed by cracks and abrasions in the fuel system, the hoses should be changed.

2. FUEL HOSES (Check) M00SAIFa

Make sure that the hoses do not come in contact with any heat source or moving component which might cause heat damage or mechanical wear.

3. AIR CLEANER ELEMENT (Replace) M00SAKGa

The air cleaner element will become dirty and loaded with dust during use, and the filtering effect will be substantially reduced. Replace it with a new one.

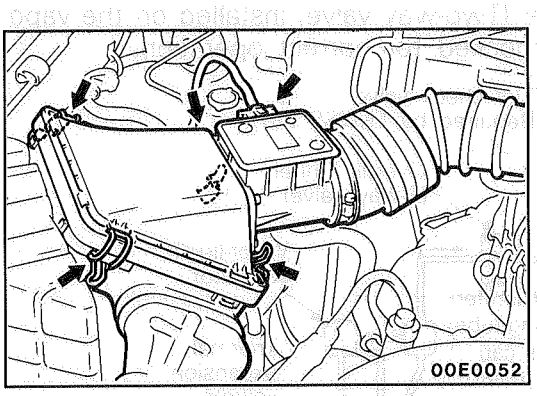

REPLACEMENT OF AIR CLEANER ELEMENT

1. Loosen the clamp coupling the air intake hose and the air cleaner cover, and separate the air intake hose
2. Disconnect the air flow sensor connectors.
3. Disconnect the air cleaner cover clips.
4. Remove the air cleaner cover and replace a new air cleaner element.
5. Clamp the clips and coupling, then connect the air flow sensor connectors.

4. CRANKCASE EMISSION CONTROL SYSTEM (Positive crankcase ventilation valve) (Clean) M00SALFa

The crankcase ventilation system must be kept clean to maintain good engine performance.

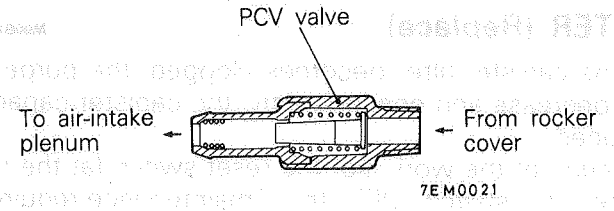

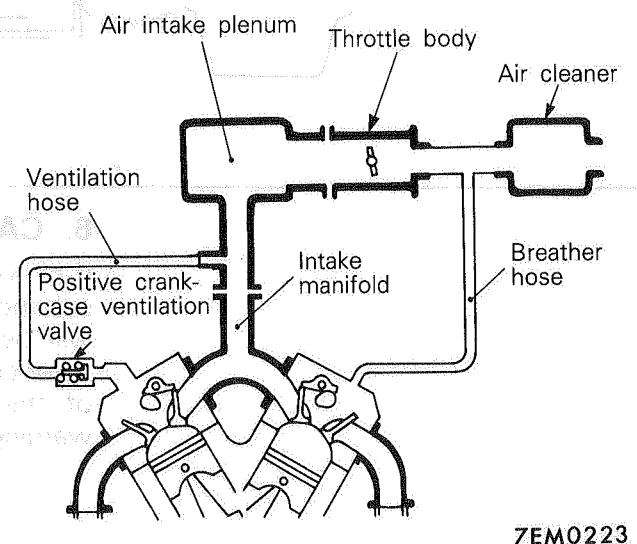

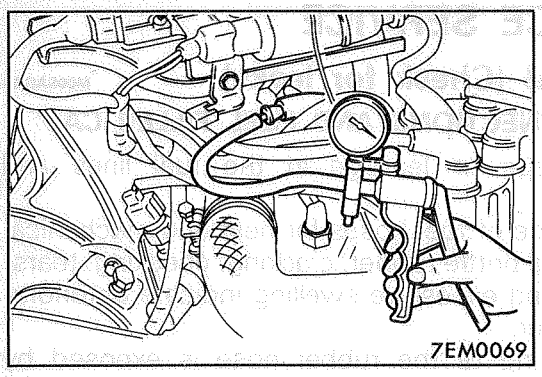

1. Disconnect the ventilation hose from the air-intake plenum, and connect a hand vacuum pump to the ventilation hose.
2. At this time, make sure that there is leakage when vacuum is applied. If there is no leakage when vacuum is applied, either clean the positive crankcase ventilation valve or replace it.
3. After completion of the work, set the reset switch (at the rear of the meter) to switch OFF the "maintenancerequired" warning light.
(Refer to GROUP 54 – Meters and Gages.)

5. EVAPORATIVE EMISSION CONTROL SYSTEM (Check for leaks and clogging) – except canister

M00SAMBa

1. If the fuel-vapor vent line is clogged or damaged, a fuelvapor mixture escapes into the atmosphere causing excessive emissions. Disconnect the line at both ends, and blow it clean with compressed air. Remove the filler cap from the filler pipe and check to see if there is evidence that the packing makes improper contact to the filler pipe.
2. The overfill limiter (Two-way valve) installed on the vapor line should be checked for correct operation.

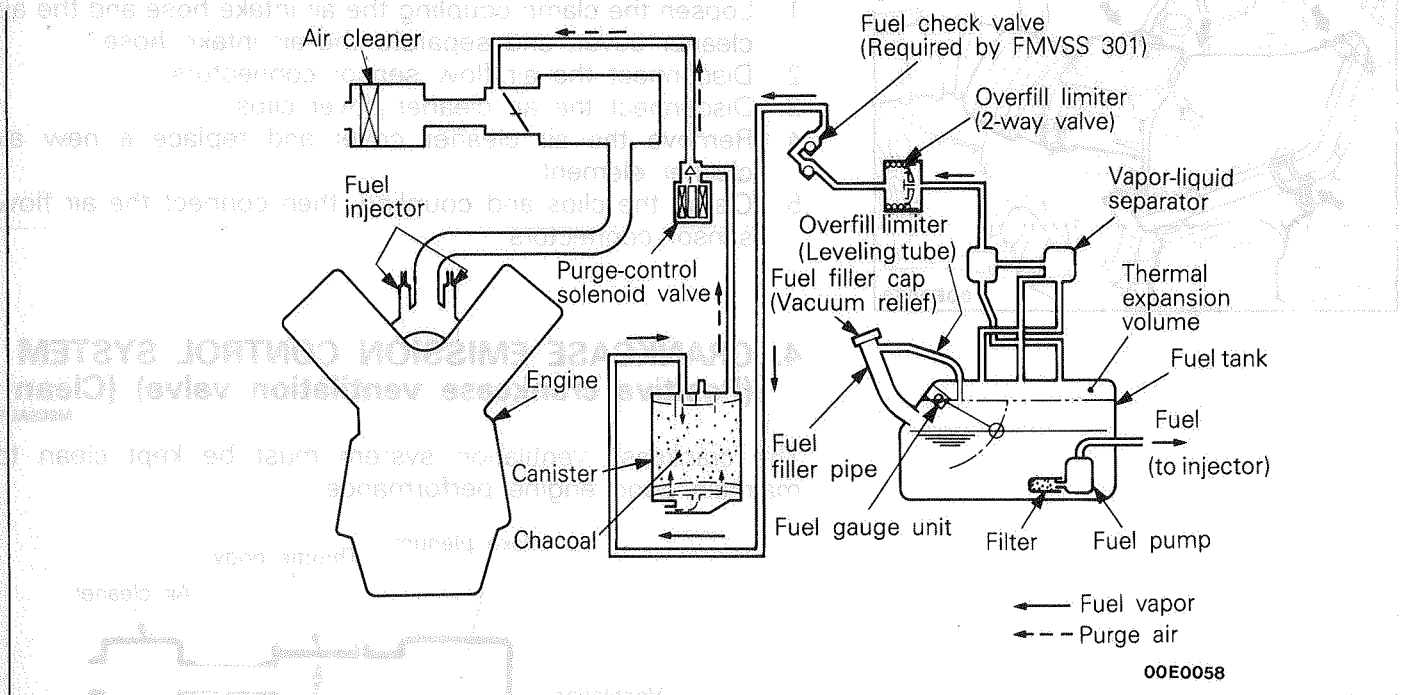

6. CANISTER (Replace)

M00SANGa

If or when the canister filter becomes clogged, the purge air volume will decrease and consequently, the canister capacity will be reduced.
After completion of the work, set the reset switch (at the rear of the meter) to switch OFF the "maintenance-required" warning light. (Refer to GROUP 54 – Meters and Gages.)

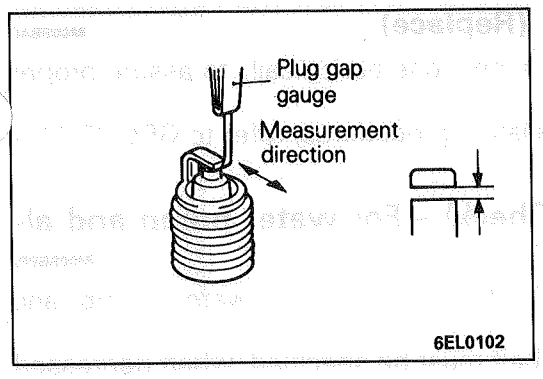

7. SPARK PLUGS (Replace) M00SAOAb

1. Spark plugs must fire properly to assure proper engine performance and emission-control.
   Therefore, they should be replaced periodically with new ones.

   Spark plug
   NGK BPR5ES-11
   NIPPON DENSO W16EPR11
   Specified torque: 25 Nm (15 ft.lbs.)
2. The new plugs should be checked for the proper gap.
   Spark plug gap: 1.0–1.1 mm (.039–.043 in.)

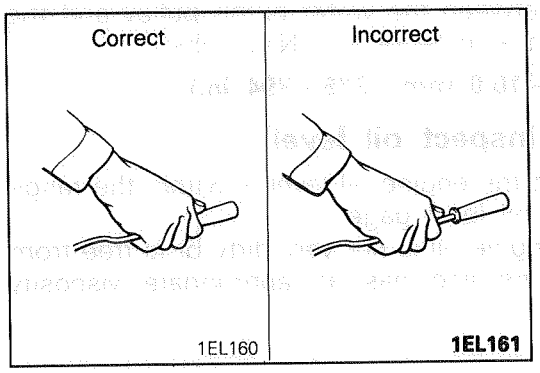

8. IGNITION CABLES (Replace) M00SAPBa

The ignition cables should be replaced periodically with new ones.
After replacing, make sure that the ignition cables and terminals are properly connected and full seated.

NOTE
When disconnecting an ignition cable, be sure to hold cable cap. If the cable is disconnected by pulling on the cable alone, an open circuit might result.

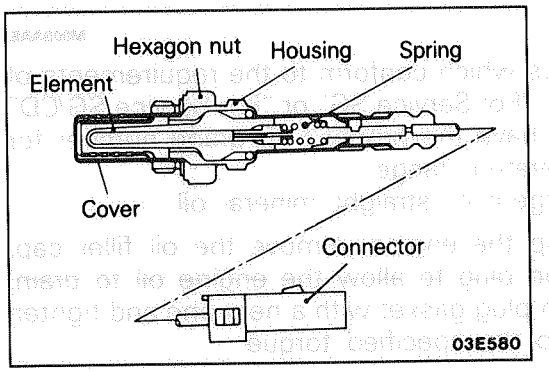

9. OXYGEN SENSOR (Replace) M00SAOF

The oxygen sensor is a device which controls the fuel mixture. If the oxygen sensor is damaged, the exhaust-gas cleaning effect as well as driveability deteriorates. Therefore, it should be replaced periodically with a new one.
After completion of the work, set the reset switch (at the rear of the meter) to switch OFF the "maintenance-required" warning light.
(Refer to GROUP 54 – Meters and Gages.)

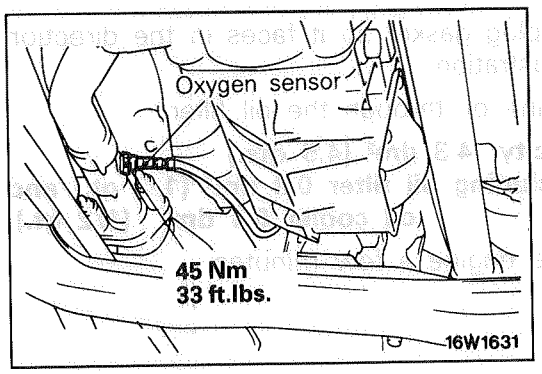

REMOVAL OF OXYGEN SENSOR

1. Disconnect the connector of the oxygen sensor.
2. Remove the oxygen sensor from the front exhaust pipe.
3. Replace the oxygen sensor on the front exhaust pipe and tighten to the specified torque.

10.DISTRIBUTOR CAP AND ROTOR (Check) M00SASAa

Check the distributor cap and rotor to maintain driveability and good exhaust gas.

DISTRIBUTOR CAP AND ROTOR INSPECTION

Inspect in accordance with the following procedure. Repair or replace as necessary.

- Check the cap for cracks.
- Check the cap and rotor electrodes for damage.
- Wipe clean the cap and rotor.

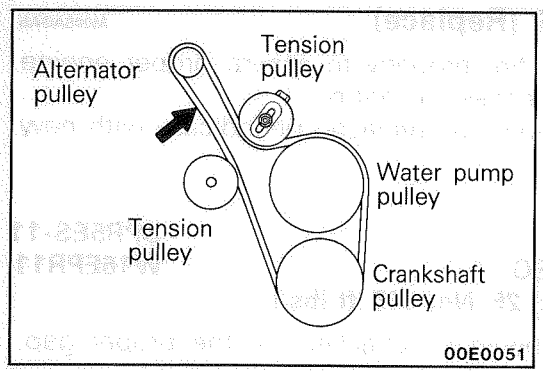

11.TIMING BELT (Replace) M00SBAC

Replace the belt with a new one periodically to assure proper engine performance.
For removal and installation procedures, refer to GROUP 11 – Timing belt.

12.DRIVE BELT (Check) – For water pump and alternator M00SBBPa

Check the tension of the belt for the water pump and alternator.
The deflection of the belt must be specified, when depressed at a point midway between the water pump pulley and the alternator pulley with a force of 100 N (22 lbs.)

Standard value: 8.0–10.0 mm (.315–.394 in.)

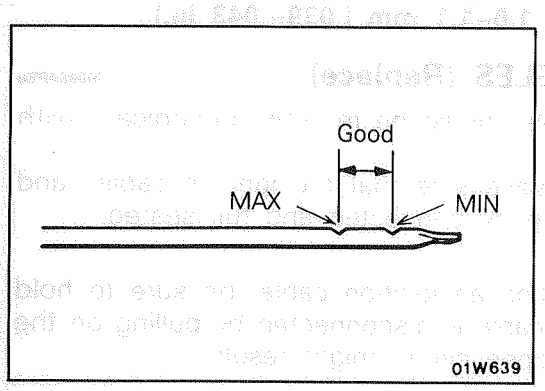

13.ENGINE OIL (Inspect oil level)

1. Check to see that the engine oil level is within the range indicated on the oil level gage.
2. Make sure that engine oil is not very dirty or is free from coolant or gasoline and has an appropriate viscosity grade.

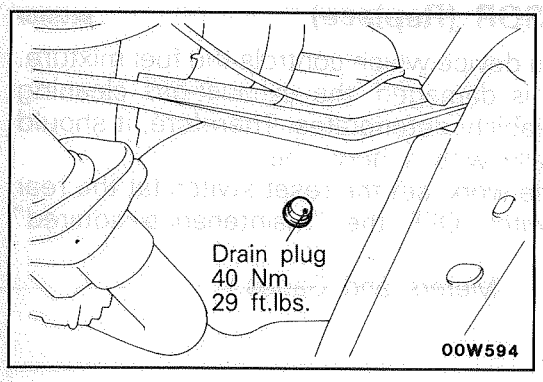

(Change) M00SAAEa

Always use lubricants which conform to the requirements of the API classification "For Service SG" or "For Service SG/CD" when available, and have the proper SAE grade number for the expected temperature range.
Never use nondetergent or straight mineral oil.

1. After warming up the engine, remove the oil filler cap.
2. Remove the drain plug to allow the engine oil to drain.
3. Replace the drain plug gasket with a new one and tighten the drain plug to the specified torque.

   NOTE
   Install the drain plug gasket so it faces in the direction shown in the illustration.

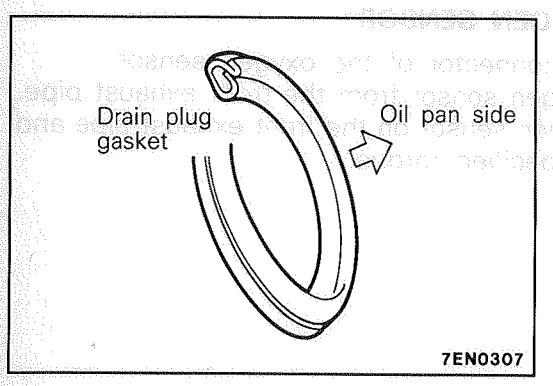

4. Supply new engine oil through the oil filler.

   Engine oil capacity: 4.3 dm³ (4.5 qts.)
   [excluding oil filter 0.3 dm³ (1/2 qt.) and oil cooler 0.3 dm³ (1/2 qt.)]

5. Start and run the engine a few minutes.

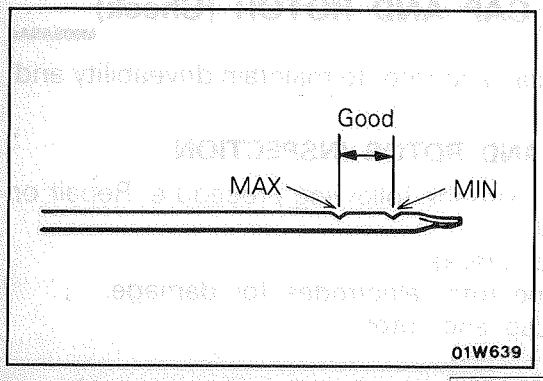

6. Stop the engine and check to ensure that the engine oil level is within the level range indicated on the dip stick.

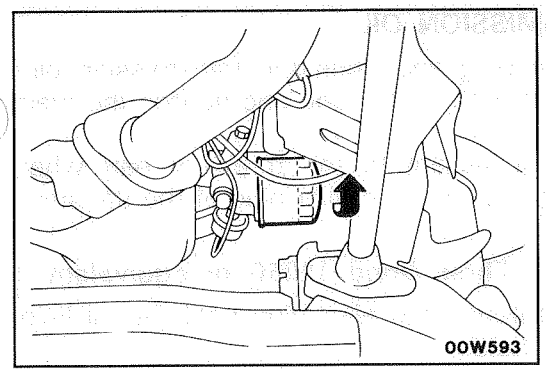

14.ENGINE OIL FILTER (Change) M00SABGa

The quality of replacement filters varies considerably. Only high quality filters should be used to assure most efficient service.
Genuine oil filters require that the filter is capable of withstanding a pressure of 256 psi are high quality filters and are recommended as follows:

Oil Filter Part Number
Mitsubishi Genuine Parts: MD136790 or equivalent

ENGINE OIL FILTER SELECTION

This vehicle is equipped with a full-flow, throw-away oil filter. The same type of replacement filter is recommended as a replacement filter for this vehicle. It is possible, particularly in cold weather, that this vehicle may develop high oil pressure for a short duration. You should be sure that any replacement filter used on this vehicle is a high-quality filter and is capable of withstanding a pressure of 1,765 kPa (256 psi) [manufacturer's specifications] to avoid filter and engine damage. The following is a high-quality filter and is strongly recommended for use on this vehicle : Mitsubishi Engine Oil Filter P/N MD1367090.

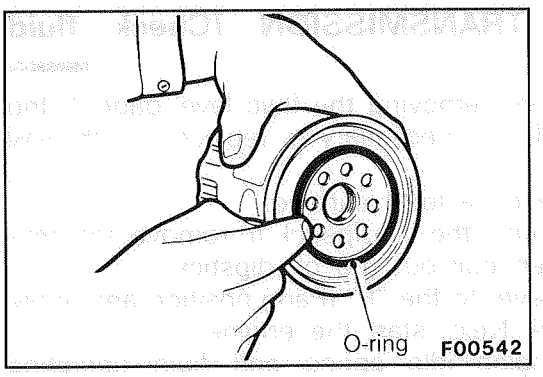

Any replacement oil filter should be installed in accordance with the oil filter manufacturer's installation instructions.
1. Drain the engine oil by removing the oil drain plug and then removing the filer cap.
2. Use an oil filter wrench to remove the engine oil filter.
3. Clean the surface of the filter bracket attachment.
4. Lubricate the O-ring of the new oil filter with a small amount of engine oil.
5. Screw in the oil filter by hand, and after the O-ring contacts the flange surface, tighten it another 3/4 turns with a filter wrench, etc. [approx. 14 Nm (10 ft.lbs.)].
6. Refill the engine oil.
7. Race the engine two or three times to make sure that no engine oil leaks from the oil filter seal.
8. After stopping engine, check oil level and refill as necessary.

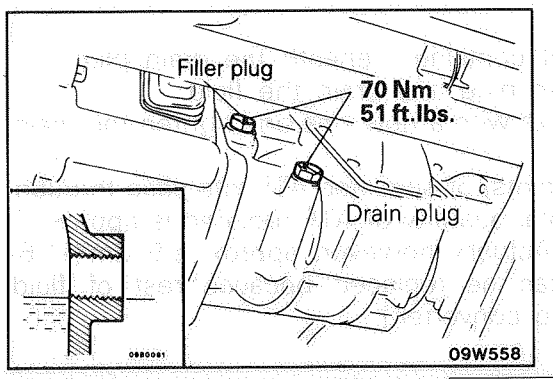

15.MANUAL TRANSMISSION (Check oil level) M00SBCCa

Inspect each component for evidence of leakage, and check the oil level by remaining the filler plug. If the oil is contaminated, it is necessary to replace it with new oil.

INSPECTION

- With the vehicle on a level surface, remove the filler plug and check whether or not the oil is at the same level as the bottom of the threads.
- Check whether or not the transmission oil is excessively dirty, and if the viscosity is normal.

REPLACING TRANSMISSION OIL

1. Remove the drain plug and drain the transmission oil.
2. Replace the gasket with a new one and tighten the drain plug.
3. Apply a coating of sealant to the threaded part when installing the drain plug and the filler plug of the transmission.

   Specified sealant: Three Bond 1105D or equivalent
4. Fill with new oil through the filler plug until the oil level reaches the plug hole.

   Manual transmission oil capacity: 2.5 dm³ (2.6 qts.)

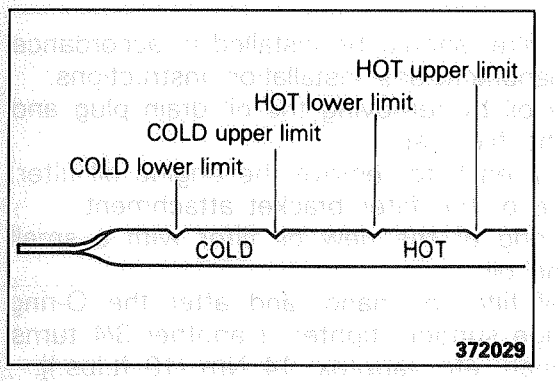

16.AUTOMATIC TRANSMISSION (Check fluid level) M00SBDGa

Check the fluid level by removing the fluid level gage. If the fluid is contaminated, it is necessary to replace it with new fluid.

1. Place the vehicle on a level surface.
2. Wipe the area around the oil dipstick to remove accumulated dirt and then pull out the oil dipstick.
3. Set the selector lever to the "P" (Park) position and apply the parking brake. Next, start the engine.
4. Check if the engine idle speed and fluid operating temperature (50–80°C; 122–176°F) are normal.
5. Move the selector lever to each position in turn to fill the torque convertor and hydraulic system with fluid and then return the selector lever to the "N" (Neutral) position.
6. Make sure the fluid level is in the "HOT" range of the oil dipstick. If the fluid level is low, add fluid until it reaches the "HOT" range.

REPLACEMENT OF AUTOMATIC TRANSMISSION FLUID

Drain the fluid and check whether there is any evidence of contamination.
Replenish with new fluid after the cause of any contamination has been corrected.

1. Place a large flat container beneath the drain plug.
2. Remove the drain plug and drain the fluid.
3. Replace the gasket with a new one and tighten the drain plug.
4. Pour 5 dm³(10.6 pints) of specified ATF into case through dipstick hole. [Total quantity of ATF required is approx. 7 dm³(14.8 pints). Actually however, approx. 5.5 dm³(11.6 pints) of fluid can be replaced because rest of fluid remains in torque converter.]

TSB Revision

Specified fluid: Dia ATF SP or MITSUBISHI PLUS ATF, or equivalent

5. Check the fluid level.

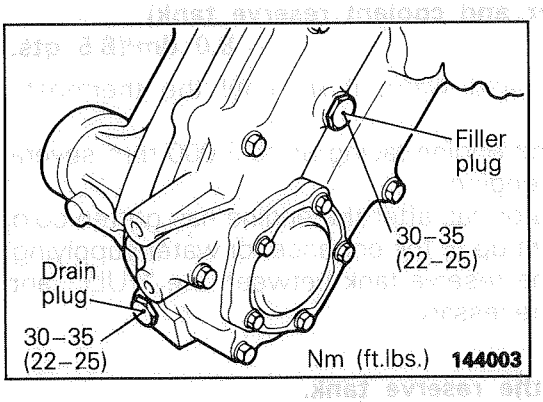

17.TRANSFER (Change oil) M00SBNBb

Drain the fluid and check whether there is any evidence of contamination. Replenish with new fluid after the cause of any contamination has been corrected.

1. With the vehicle on a flat, level surface, drain out the transfer oil.
2. Replace the packing with a new one, and close the drain plug.
3. Supply new transfer oil through the filler plug until it reaches the same level as the plug hole.

Transfer oil total capacity: 2.3 dm³ (2.4 qts.)

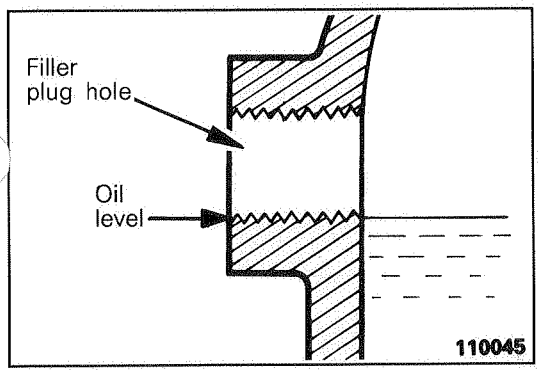

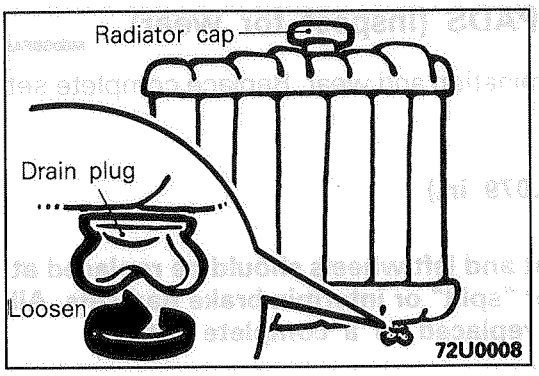

18.ENGINE COOLANT M00SBEEa

Check the cooling system parts such as radiator, heater and oil cooler hoses thermostat and connections for leakage and damage.

CHANGING COOLANT

1. Set the temperature control lever to the hot position.
2. Remove the radiator cap, radiator drain plug and engine drain plug to drain the coolant.

Caution
When removing the radiator cap, use care to avoid contact with hot coolant or steam. Place a shop towel over the cap and turn the cap counterclockwise a little to let pressure escape through the vinyl tube. After relieving the steam pressure, remove the cap by slowly turning it counterclockwise.

3. Remove the reserve tank and drain the coolant.
4. After draining coolant completely, reinstall the drain plugs and flush the engine and radiator using a radiator cleaning fluid.

5. After the flushing is completed, completely drain the cleaning fluid and install the radiator and engine drain plugs.
6. By referring to the section on coolant (P.00-31), select an appropriate concentration for safe operating temperature within the range of 30 to 60%. Refill the system with a high quality ethylene glycol antifreeze at the selected concentration. A convenient mixture is a 50% water and 50% antifreeze solution [Freezing point: –30°C (–32.8°F)]. Reinstall the radiator cap.

   Engine coolant total capacity
   (including heater and coolant reserve tank)
   8.0 dm³(8.5 qts.)
7. Start the engine and warm it up until the thermostat opens.
8. After repeating the engine racing up to 3,000 rpm several times, stop the engine.
9. Remove the radiator cap after the engine has gotten cold, and pour in coolant up to the entrance for water supplying.
10. Add coolant to the reserve tank between the "FULL" and "LOW" mark if necessary.

Caution
Do not overfill the reserve tank.

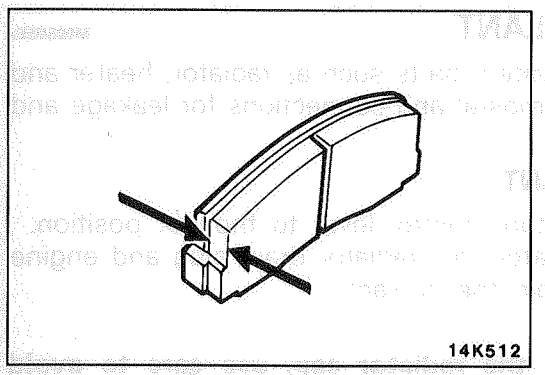

19.DISC BRAKE PADS (Inspect for wear) M00SBFAb

Check for fluid contamination and wear. Replace complete set of pads if defective.

Thickness of lining
Limit: 2.0 mm (.079 in.)

Caution
The pads for the right and left wheels should be replaced at the same time. Never "split" or intermix brake pad sets. All four pads must be replaced as a complete set.

20.BRAKE HOSES (Check for deterioration or leaks) M00SBHA

Inspection of brake hoses and tubing should be included in all brake service operations.
The hoses should be checked for:

1. Correct length, severe surface cracking, pulling, scuffing or worn spots. (If the fabric casing of the hoses is exposed by cracks or abrasion in the rubber hose cover, the hoses should be replaced. Eventual deterioration of hose may occur with possible bursting failure.)
2. Faulty installation, casing twisting or interference with wheel, tire or chassis.

21.BALL JOINT AND STEERING LINKAGE SEALS (Inspect for grease leaks and damage) M00SBJA

1. These components, which are permanently lubricated at the factory, do not require periodic lubrication. Damaged seals and boots should be replaced to prevent leakage or contamination of the grease.
2. Inspect the dust cover and boots for proper sealing, leakage and damage. Replace them if defective.

22.DRIVE SHAFT BOOTS (Inspect for grease leaks and damage) M00SBJAb

1. These components, which are permanently lubricated at the factory, do not require periodic lubrication. Damaged seals and boots should be replaced to prevent leakage or contamination of the grease.
2. Inspect the dust cover and boots for proper sealing, leakage and damage. Replace them if defective.

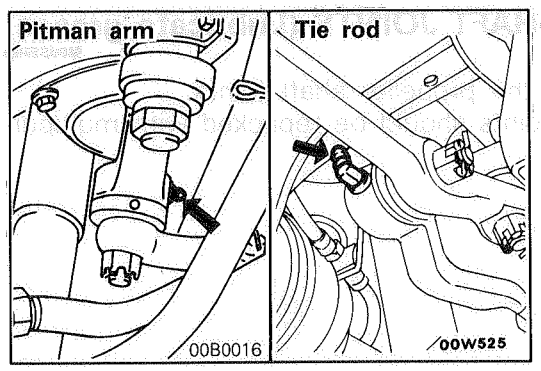

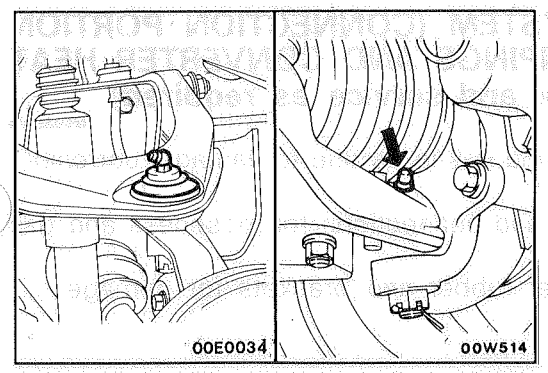

23.BALL JOINTS WITH GREASE FITTING (Lubricate grease) M00SBOBb

Fill the multipurpose grease at the grease fitting till the grease come out of the dust seal of the pitman arm, tie rod, lower control arm and upper control arm.

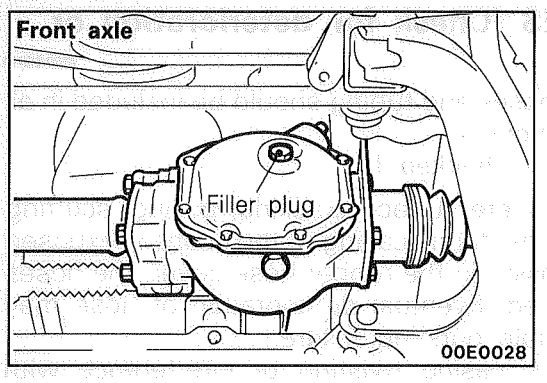

24.FRONT AXLE AND REAR AXLE (CONVENTIONAL DIFFERENTIAL) (Inspect oil level)

M00SBPA

Remove the filler plug and inspect the oil level at bottom of filler hole. If the oil level is slightly below the filler hole, it is in satisfactory condition.

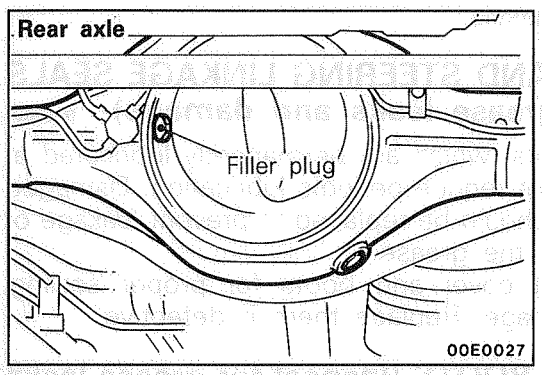

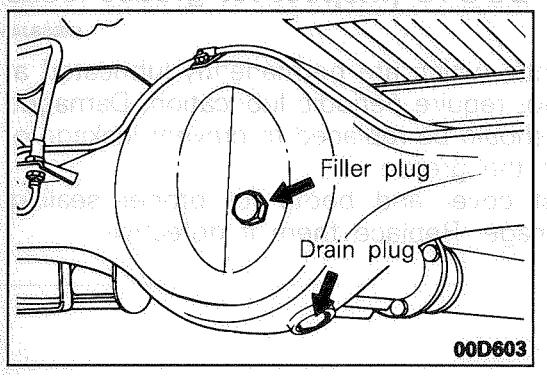

24.REAR AXLE OIL (LIMITED-SLIP DIFFERENTIAL) (Change)

M00SBOAb

Before changing the rear axle oil, check to make sure that there is no oil leakage from the rear axle housing.
Remove the drain plug and drain out of the oil.
Put the oil plug back in place, and then pour new oil in through the filler hole.

Oil capacity: 2.6 dm³ (2.7 qts.)

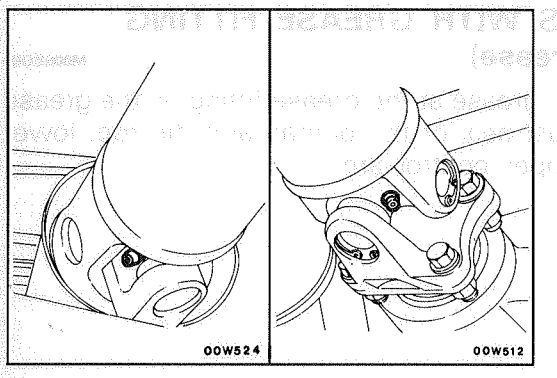

25.PROPELLER SHAFT JOINTS (Lubricate grease)

M00SBRBa

Lubricate grease to the propeller shaft joints.
The propeller shaft joints should be repacked with multipurpose grease.

26.EXHAUST SYSTEM (CONNECTION PORTION OF MUFFLER, PIPINGS AND CONVERTER HEAT SHIELDS) (Check and service as required)

M00SBLAa

1. Check for holes and gas leaks due to damage, corrosion, etc.
2. Check the joints and connections for looseness and gas leaks.
3. Check the hanger rubber and brackets for damage.

ENGINE

CONTENTS

M11AA--

CAMSHAFT OIL SEAL **15**
CRANKSHAFT OIL SEALS **16**
Front Oil Seal 16
Rear Oil Seal 17
CYLINDER HEAD GASKET **20**
ENGINE ASSEMBLY **12**
ENGINE OIL COOLER **27**
OIL PAN AND OIL SCREEN **18**
SERVICE ADJUSTMENT PROCEDURES **5**
Compression Pressure Check 7
Curb Idle Speed Inspection 6
Drive Belts Tension Inspection and Adjustment 11
Ignition Timing Inspection and Adjustment 5
Last Adjuster Check 9
Manifold Vacuum Inspection 8
Timing Belt Tension Adjustment 8
SPECIAL TOOLS **3**
SPECIFICATIONS **2**
General Specifications 2
Sealants and Adhesives 3
Service Specifications 2
TIMING BELT **23**
TROUBLESHOOTING **4**

SPECIFICATIONS

GENERAL SPECIFICATIONS

M11CA--

Items		Specifications
Type		V-type, OHC
Number of cylinders		6
Bore	mm (in.)	91.1 (3.587)
Stroke	mm (in.)	76.0 (2.992)
Piston displacement	cm^3 (cu.in.)	2,972 (181.4)
Compression ratio		8.9
Firing order		1-2-3-4-5-6
Valve timing		
Intake valve	Opens (BTDC)	19°
	Closes (ABDC)	59°
Exhaust valve	Opens (BBDC)	59°
	Closes (ATDC)	19°
Valve overlap		38°
Intake valve duration		258°
Exhaust valve duration		258°

SERVICE SPECIFICATIONS

MICA--

Items		Standard Value	Limit
Engine adjustments			
Engine compression pressure	kPa (psi)/250-400 rpm	1200 (171)	min. 890 (127)
Engine compression pressure difference between each cylinder	kPa (psi)	—	max. 100 (14)
Intake manifold vacuum-at idle	kPa (mmHg, in.Hg)	Approx. 69 (520, 20)	
Basic ignition timing at curb idle speed	BTDC	5° ± 2°	
Actual ignition timing at curb idle speed	BTDC	Approx. 15°	
Curb idle speed	rpm	700 ± 100	
Drive belt			
For alternator			
Deflection	mm (in.)		
Inspection		8.0–10.0 (.315–.394)	
Used belt		9.0 (.354)	
New belt		6.5–8.0 (.256–.315)	
Tension	N (lbs.)		
Inspection		350–600 (77.2–132.3)	
Used belt		400 (88)	
New belt		500–700 (110.2–154.3)	
For power steering			
Deflection	mm (in.)		
Inspection		9.0–14.5 (.354–.571)	
Used belt		10.0 (.394)	
New belt		8.0 (.315)	
For A/C			
Deflection	mm (in.)		
Inspection		6.5–7.5 (.256–.295)	
Used belt		6.5–7.5 (.256–.295)	
New belt		5.0–6.0 (.197–.236)	
Tension	N (lbs.)		
Inspection		35–40 (77–88)	
Used belt		35–40 (77–88)	
New belt		50–60 (110–132)	
Timing belt tension	N (lbs.)	200–300 (44.1–66.1)	

TSB Revision

SEALANTS AND ADHESIVES

M11CE--

Items	Specified sealant or adhesive
Oil pan	MITSUBISHI GENUINE PART No. MD997110 or equivalent.
Rocker cover and camshaft bearing cap seal	3M ATD Part No. 8660 or equivalent
Timing belt cover gasket	3M ATD Part No. 8001 or equivalent

SPECIAL TOOLS

M11DA--

Tool	Number	Name	Use
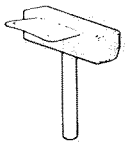	GENERAL SERVICE TOOL	Oil pan sealer cutter	Removal of oil pan
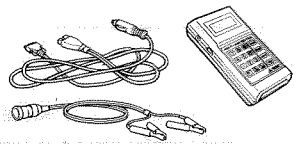	MB991341	Multi-use tester sub assembly	Checking of the engine idling speed
	MB991423	ROM pack	
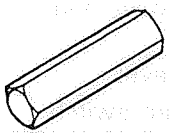	MD998051-01 OPTIONAL: AVAILABLE FROM OTC	Wrench, cylinder head bolt	Loosening and tightening of cylinder head bolt.
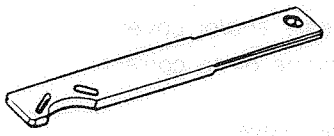	MB990767-01	End yoke holder	Supporting the sprocket and shaft pulley when attaching or detaching them.
	MIT308239	Pulley holding pins	
	MD998716-01	Crankshaft wrench	Used if the crankshaft needs to be rotated to attach the timing belt, etc.

Tool	Number	Name	Use
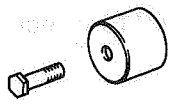	MD998713-01	Camshaft oil seal installer	Press fitting the camshaft oil seal
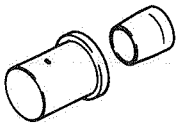	MD998717	Crankshaft front oil seal installer	Press fitting crankshaft front oil seal
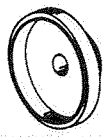	MD998718-01	Crankshaft rear oil seal installer	Press fitting crankshaft rear oil seal

TROUBLESHOOTING

M11EAAQ

Symptom	Probable cause	Remedy
Compression too low	Cylinder head gasket blown	Replace gasket
	Piston ring worn or damage	Replace rings
	Piston or cylinder worn	Repair or replace piston and/or cylinder block
	Valve seat worn or damage	Repair or replace valve and/or seat ring
Oil pressure drop	Engine oil level too low	Check engine oil level
	Oil pressure switch faulty	Replace oil pressure switch
	Oil filter clogged	Install new filter
	Oil pump gears or cover worn	Replace gears and/or cover
	Thin or diluted engine oil	Change engine oil to correct viscosity
	Oil relief valve struck (opened)	Repair relief valve
	Excessive bearing clearance	Replace bearings
Oil pressure too high	Oil relief valve stuck (closed)	Repair relief valve
Noisy valves	Incorrect lash adjuster	Replace lash adjuster
	Thin or diluted engine oil (low oil pressure)	Change engine oil
	Valve stem or valve guide worn or damage	Replace valve and/or guide
Connecting rod noise/ main bearing noise	Insufficient oil supply	Check engine oil level
	Thin or diluted engine oil	Change engine oil
	Excessive bearing clearance	Replace bearings
Timing belt noise	Incorrect belt tension	Adjust belt tension

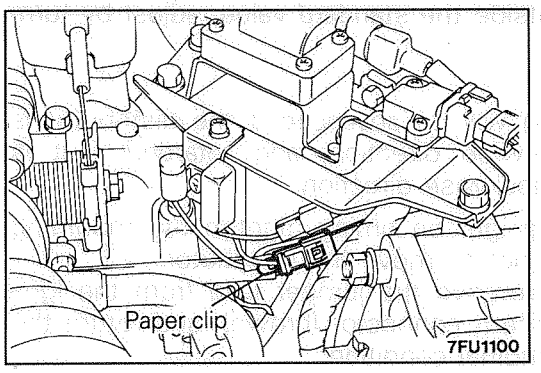

SERVICE ADJUSTMENT PROCEDURES

IGNITION TIMING INSPECTION AND ADJUSTMENT

M11FLAG

(1) The vehicle should be prepared as follows before the inspection and adjustment.
- Engine coolant temperature: 80–95°C (176–205°F)
- Lights and all accessories: OFF
- Transmission: Neutral (P for A/T)
- Steering wheel: Neutral position

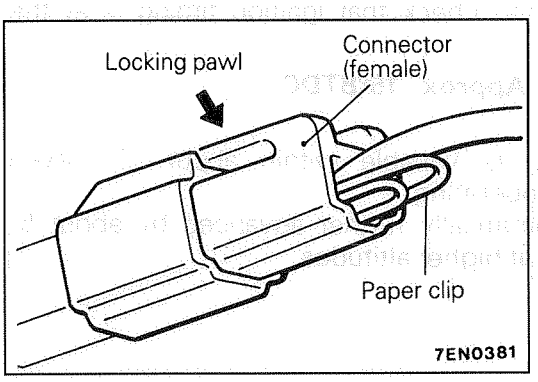

(2) Insert a paper clip into the 1-pin connector between the primary side of the ignition coil and the noise filter. The connector should not be disconnected.

Caution
Insert the paper clip along the terminal from the opposite side to the locking pawl of the female connector, as shown in the illustration.

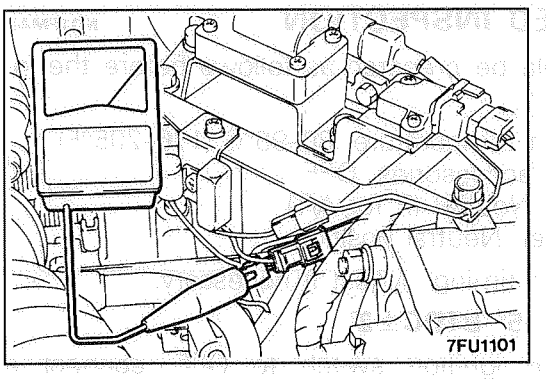

(3) Connect a primary voltage detection-type speedometer to the paper clip.

NOTE
Do not use the multi-use tester (MUT). When the multi-use tester is connected to the diagnosis connector, the ignition timing will be unchanged, instead of reverting to the standard ignition timing.

(4) Set up a timing light.
(5) Start the engine and run it at idle speed.
(6) Check that the idle speed is at the standard value.

Standard value: 700±100 rpm

(7) Turn the ignition switch to "OFF".
(8) Remove the waterproof female connector from the ignition timing adjustment connector (brown).

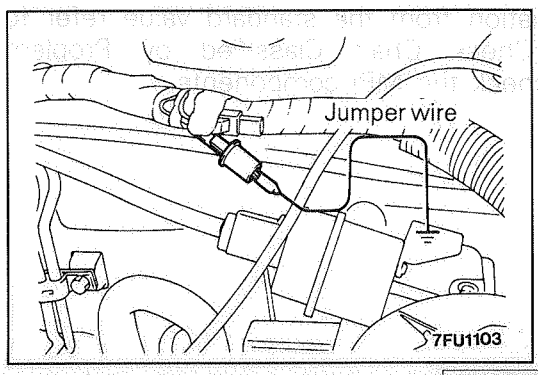

(9) Use a jumper wire to ground the ignition timing adjustment terminal.

NOTE
Grounding the ignition timing adjustment terminal will change the ignition timing to standard.

(10) Start the engine and run it at idle speed.
(11) Inspect the standard ignition timing.

Standard value: 5° BTDC±2°

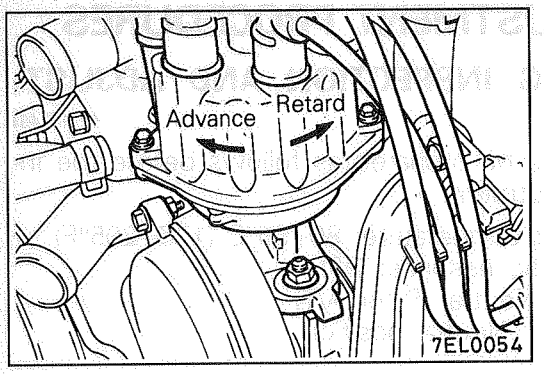

(12) If the timing is outside the standard value, adjust by turning the distributor.

NOTE
The ignition timing will be advanced if the distributor is turned in a clockwise direction, and retarded if it is turned a counterclockwise direction.

(13) After adjusting the ignition timing, tighten the mounting nut, being careful not to move the distributor.
(14) Stop the engine, remove the jumper lead from the ignition timing adjustment connector (brown), and return the connector to its original condition.
(15) Start the engine and check that ignition timing is at the standard value.

Standard value: Approx. 15°BTDC

NOTE
1. Ignition timing is variable within about ±7°, even under normal operating.
2. And it is automatically further advanced by about 5° from 15°BTDC at higher altitudes.

CURB IDLE SPEED INSPECTION M11FMAD

(1) The vehicle should be prepared as follows before the inspection.
- Engine coolant temperature: 80–95°C (176–205°F)
- Lights and all accessories: OFF
- Transmission: Neutral (P for A/T)
- Steering wheel: Neutral position

(2) Check the ignition timing. Adjust if necessary.

Standard value: 5° BTDC±2°

(3) After turning the ignition switch to OFF, connect a tachometer, or connect the multi-use tester (MUT) to the diagnosis connector (white).

NOTE
For the procedures for setting the tachometer, refer to 11-5.

(4) Start the engine and run it at idle.
(5) Run the engine at idle for 2 minutes.
(6) Check the idle speed.

Curb idle speed: 700 ± 100 rpm

NOTE
The idle speed is adjusted automatically by the idle speed control (ISC) system.

(7) If there is a deviation from the standard value refer to GROUP 13 – Check Chart Classified by Problem Symptoms, and check the MPI components.

COMPRESSION PRESSURE CHECK M11FFAM

(1) Before inspection, check that the engine oil, starter and battery are normal. Also, set the vehicle to the following condition:
- Engine coolant temperature: 80–95°C (176–205°F)
- Lights and all accessories: OFF
- Transmission: Neutral (P for A/T)
- Steering wheel: Neutral position

(2) Disconnect the spark plug cables.
(3) Remove all of the spark plugs.
(4) Disconnect the distributor connector.

NOTE
Doing this will prevent the engine control unit from carrying out ignition and fuel injection.

(5) Cover the spark plug hole with a rag etc., and after the engine has been cranked, check that no foreign material is adhering to the rag.

Caution
1. **Keep away from the spark plug hole when cranking.**
2. **If compression is measured while water, oil, fuel, etc., that has come from cracks is inside the cylinder, these materials will become heated and will gush out from the spark plug hole, which is dangerous.**

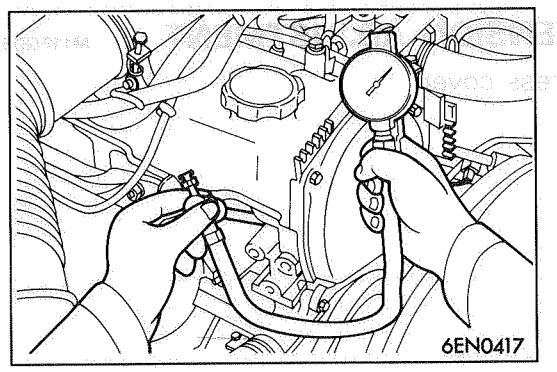

(6) Set the compression gage to one of the spark plug mounting holes.
(7) Crank the engine with the throttle valve fully open and measure the compression pressure.

Standard value: 1200 kPa (171 psi.) / 250-400 rpm
Limit: min. 890 kPa (127 psi.) / 250-400 rpm

(8) Measure the compression of all the cylinders, and check that the pressure differences of the cylinders are below the limit.

Limit: max. 100 kPa (14 psi.)

(9) If there is a cylinder with compression or a compression difference that is outside the limit, pour a small amount of engine oil through the spark plug hole, and repeat the operations in steps (6) and (8).
① If the compression increases after oil is added, the cause of the malfunction is a worn or damaged piston ring and/or cylinder inner surface.
② If the compression does not rise after oil is added, the cause is a burnt or defective valve seat, or pressure is leaking from the gasket.

(10) Connect the distributor connector.
(11) Install the spark plugs and spark plug cables.
(12) Use the multi-use tester to erase the self-diagnosis codes, or reconnect after the battery cable (–) is disconnected for over 10 minutes.

NOTE
This will erase the malfunction code resulting from the crank angle sensor connector being disconnected.

MANIFOLD VACUUM INSPECTION M11FNAT

(1) Before inspection put the vehicle into the following state.
- Engine coolant temperature: 80–95°C (176–205°F)
- Lights and all accessories: OFF
- Transmission: Neutral (P for A/T)
- Steering wheel: Neutral position

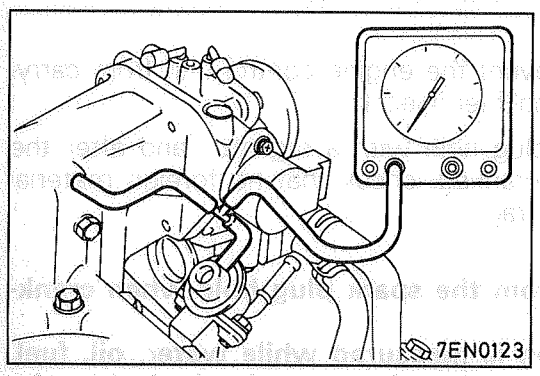

(2) Connect a tachometer
(3) Connect a three-way joint to the vacuum hose between the air intake plenum and the fuel-pressure regulator, and then connect a vacuum gage.
(4) Start the engine and check that idle speed is within the standard value range.
Read off the vacuum gage.

Standard value:
Approx. 69 kPa (520 mmHg, 20 in.Hg)

(5) If not at standard value, refer to following chart for cause and repair.

TIMING BELT TENSION ADJUSTMENT M11FGDB

(1) Remove the access cover.

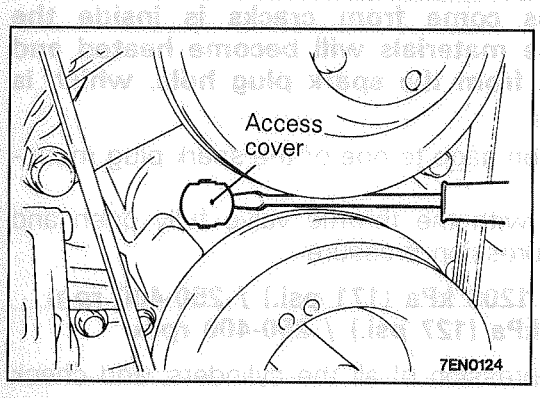

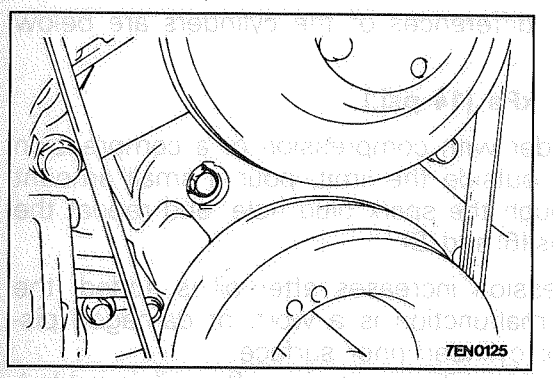

(2) Loosen the timing belt tensioner mounting bolt 1 or 2 turns.
(3) Turn the crankshaft two turns in the clockwise direction.
(4) Tighten the timing belt tensioner mounting bolt.
(5) Attach the access cover.

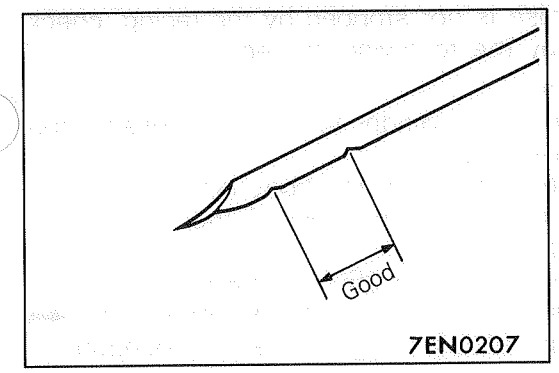

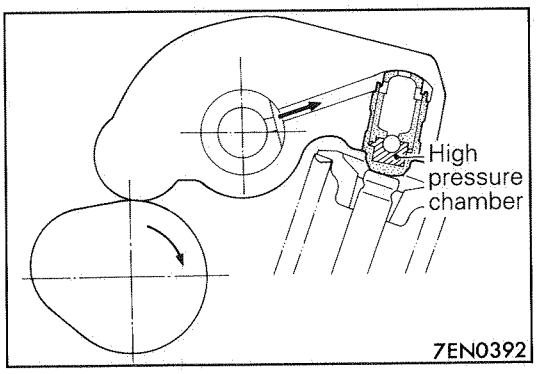

LASH ADJUSTER CHECK M11FEAH

NOTE
Directly after starting the engine or while the engine is running, if an abnormal sound (knocking) that seems to be coming from the lash adjuster is heard and doesn't stop, carry out the following inspection.

(1) Check the engine oil and replenish or replace the oil if necessary.

NOTE
- If there is a small amount of oil, air is sucked in through the oil strainer and gets into the oil passage.
- If the amount of oil is greater than normal, oil is mixed by the crank, and a large amount of air is mixed into the oil.
- Air and oil will not separate easily in oil that has degenerated, and the amount of air mixed into the oil will increase.

If the air mixed int with the oil due to the above reasons gets into the high pressure chamber of the lash adjuster, the air inside the high pressure chamber will be compressed when the valve is open and the lash adjuster will over-compress, resulting in an abnormal noise when the valve closes. This is the same effect as if the valve clearance is adjusted to be too large by mistake.
In this case, if the air inside the lash adjuster is released, then the operation has returned to normal.

(2) Start the engine and gently race * the engine several times (10 times or less).
If the abnormal noise is stopped by the racing, air has been released from the high pressure chamber, and the functioning of the lash adjuster has returned to normal.
* After gradually increasing the engine speed from idle speed to 3000 rpm (over 30 seconds), gradually reduce the engine speed back to idle speed (over 30 seconds).

NOTE
- f the vehicle is parked on a slope for a long period of time, the amount of oil inside the lash adjuster will decrease, and air may get into the high pressure chamber when starting the engine.
- After parking the vehicles for long periods the oil drains out of the oil passage, and it takes time for the oil to be supplied to the lash adjuster, so air can get into the high pressure chamber.

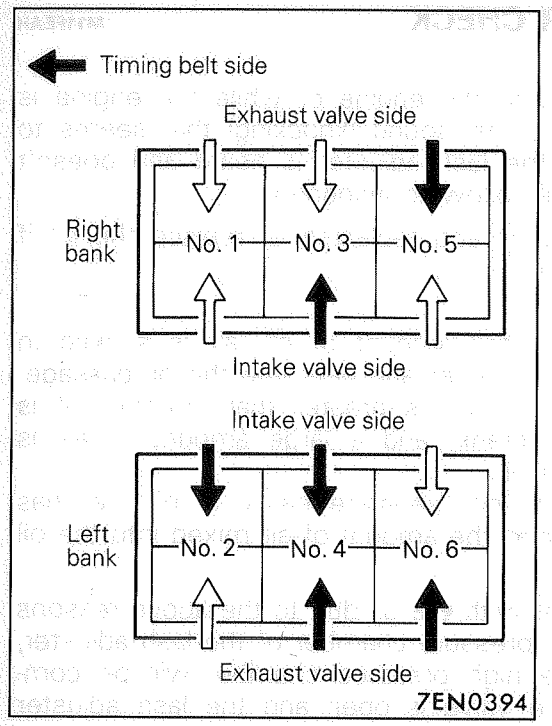

(3) If the abnormal noise is not stopped by the racing, check the lash adjuster by the following procedure.

① Stop the engine.
② Set the engine No.1 cylinder to the compression top dead center position.
③ Push the rocker arm in the locations indicated by ⇦ in the illustration at left to check if the rocker arm moves down or not.
④ Slowly turn the crankshaft 360° clockwise.
⑤ Check the rocker arm in the locations indicated by ⬅ in the illustration at left using the same procedure in step ③.

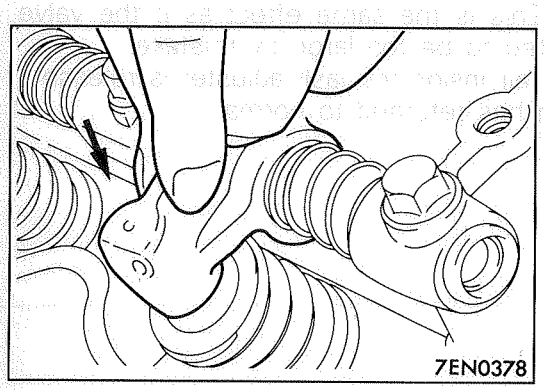

⑥ If the rocker arm moves down when it is pushed, replace the lash adjuster.
When replacing the lash adjuster, install after bleeding the air from all of the lash adjusters, and then carry out the checks in steps ① to ⑤.
In addition, if the rocker arm feels extremely stiff when it is pushed and does not move down, the lash adjuster is normal, so investigate for some other cause of the abnormality.

NOTE
For the procedure for bleeding the air from the lash adjusters, refer to the Engine Service Manual [Pub. No. MSSP-201B-00].

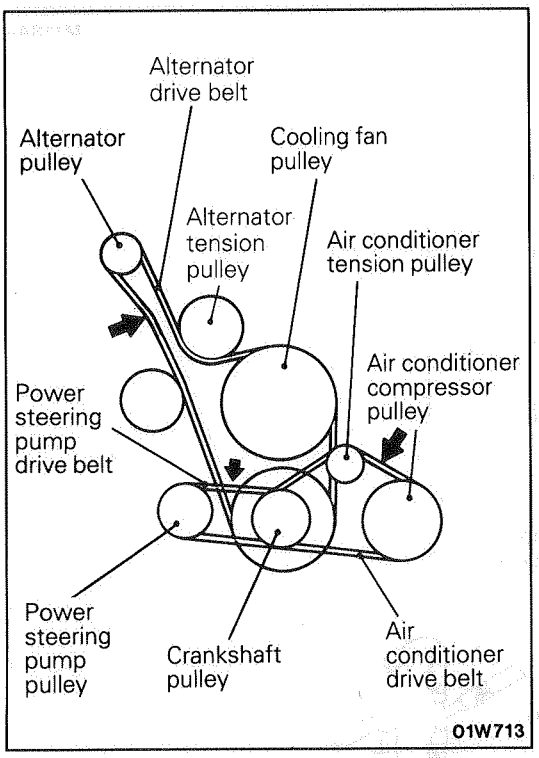

DRIVE BELTS TENSION INSPECTION AND ADJUSTMENT

E11FQBE

Apply 100 N (22 lbs.) force to the belt back midway between the pulleys as shown in the illustration, measure the deflection or by using a belt-tension gage, check the belt tension.

Standard value:

Item		Check value	Adjustment value	
			Used belt	New belt
For alternator	Deflection mm (in.)	8.0-10.0 (.315-.394)	9.0 (.354)	6.5-8.0 (.256-.315)
	Tension N (lbs.)	350-600 (77-132)	400 (88)	500-700 (110-154)
For power steering	Deflection mm (in.)	9.0-14.5 (.354-.571)	10.0 (.394)	8.0 (.315)
For A/C	Deflection mm (in.)	6.5-7.5 (.256-295)	←	5-6 (.197-236)
	Tension N (lbs.)	35-40 (77-88)	←	50-60 (110-132)

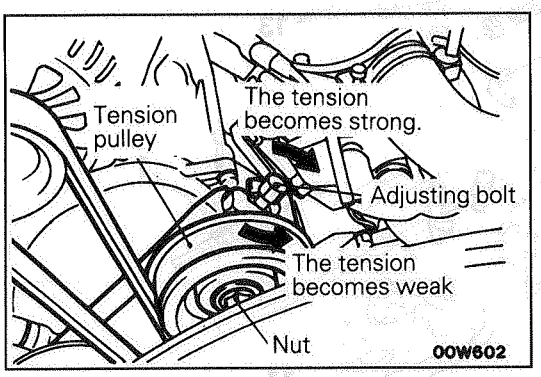

TENSION ADJUSTMENT OF ALTERNATOR DRIVE BELT

(1) Loosen tension pulley fixing nut.
(2) Adjust belt tension with adjusting bolt.
(3) Tighten fixing nut.
(4) Crank the engine once or more.
(5) Check the belt tension.

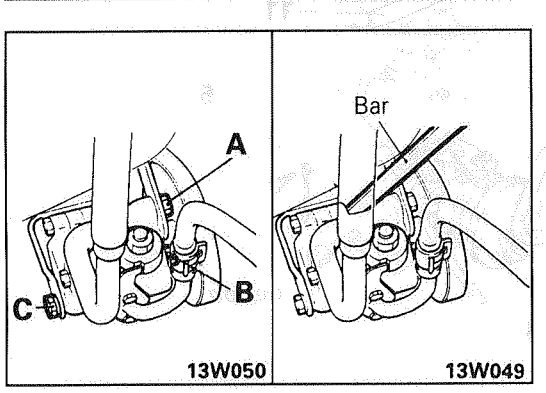

DEFLECTION ADJUSTMENT OF POWER STEERING OIL PUMP DRIVE BELT

(1) Loosen power steering fixing bolts (A), (B) and (C).
(2) Move power steering pump and tension belt moderately and adjust.
(3) Tighten the fixing bolts (A), (B) and (C) in that order.
(4) Crank the engine once or more.
(5) Check the belt tension

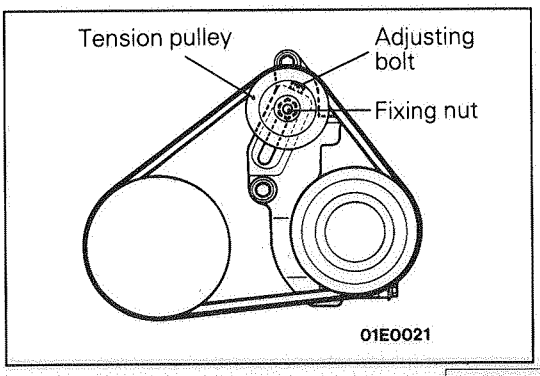

TENSION ADJUSTMENT OF AIR CONDITIONER COMPRESSOR DRIVE BELT

(1) Loosen tension pulley fixing nut.
(2) Adjust belt tension with adjusting bolt.
(3) Tighten fixing nut.
(4) Crank the engine once or more.
(5) Check the belt tension.

ENGINE ASSEMBLY

M11SA--

REMOVAL AND INSTALLATION

Pre-removal Operation
- Removal of the Hood (Refer to GROUP 42 – Hood.)
- Removal of the Radiator (Refer to GROUP 14 – Radiator.)
- Removal of the Under Skid Plate, Undercover
- Removal of the Front Exhaust Pipe (Refer to GROUP 15 – Exhaust Pipe and Mufflers.)
- Removal of the Transmission and Transfer Assembly (Refer to GROUP 22, 23 – Transmission and Transfer Assembly.)

Post-installation Operation
- Installation of the Transmission and Transfer Assembly (Refer to GROUP 22, 23 – Transmission and Transfer Assembly.)
- Installation of the Front Exhaust Pipe (Refer to GROUP 15 – Exhaust Pipe and Mufflers.)
- Installation of the Under Skid Plate, Undercover
- Installation of the Radiator (Refer to GROUP 14 – Radiator.)
- Installation of the Hood (Refer to GROUP 42 – Hood.)
- Adjustment of the engine (Refer to P.11-5.)
- Adjustment of Accelerator cable (Refer to GROUP 13 – Service Adjustment Procedures.)

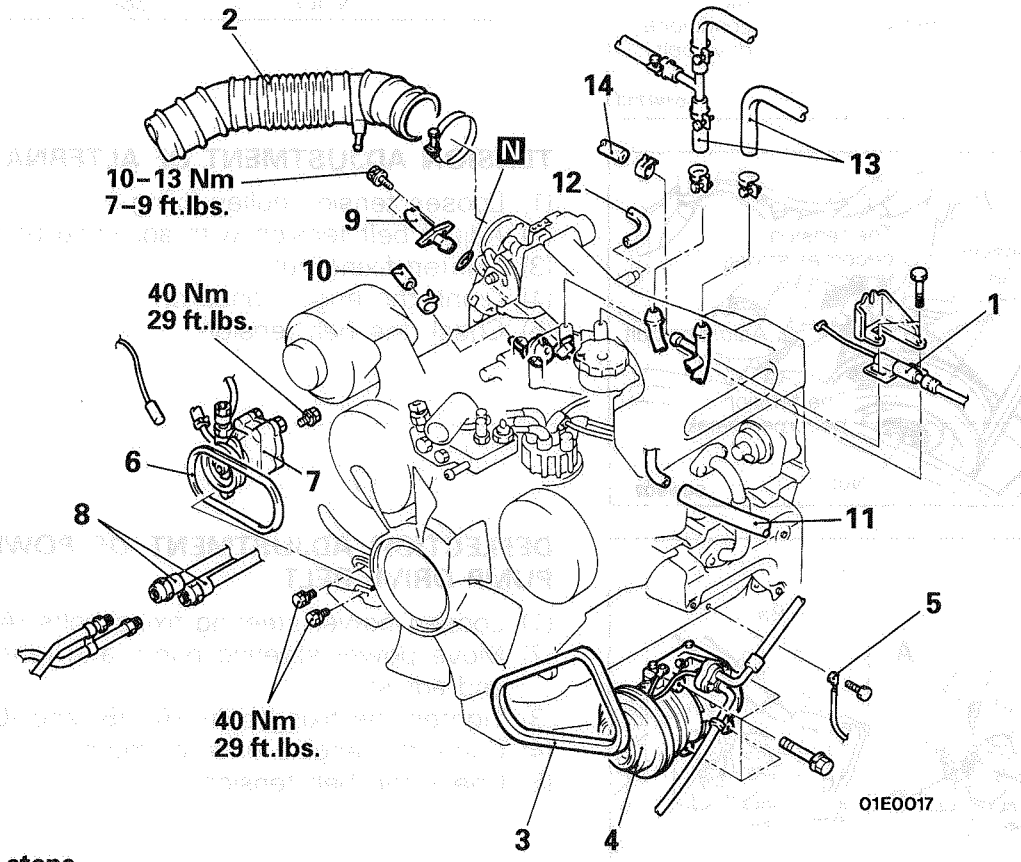

Removal steps

1. Accelerator cable connection
2. Air intake hose
3. Drive belt } <A/C>
4. Compressor } <A/C>
5. Connection for ground cable
6. Drive belt } (Power steering)
7. Oil pump } (Power steering)
8. Oil cooler hose connection
9. High pressure fuel hose connection
10. Fuel return hose connection
11. Vacuum hose connection
12. Brake booster vacuum hose connection
13. Heater hose connections
14. Heater hose B connection

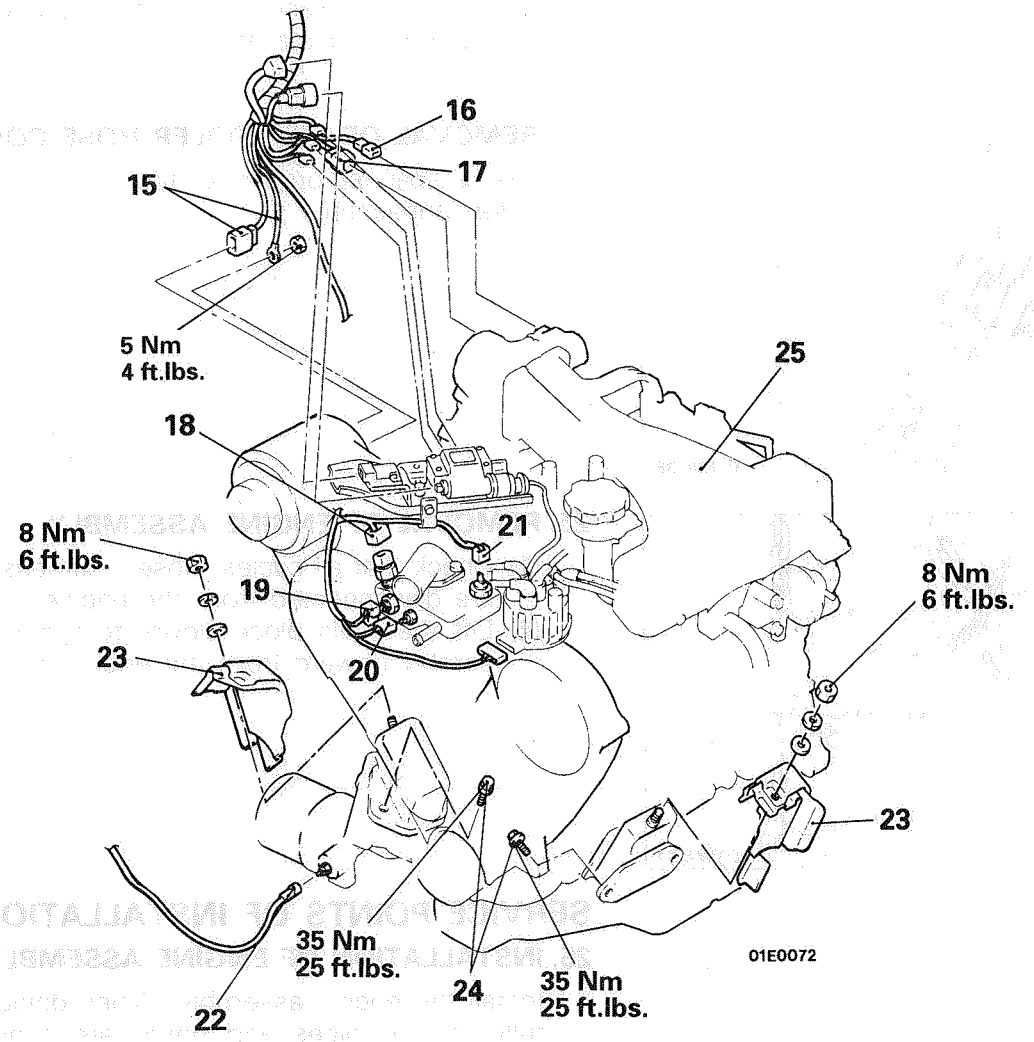

15. Alternator connector
16. ISC motor connector
17. TPS connector
18. Engine coolant temperature switch connector <A/C>
19. Engine coolant temperature sensor connector
20. Thermo switch connector <A/T>
21. Engine coolant temperature gage unit connector
22. Oil pressure gage unit connector
23. Heat protectors
24. Engine mounting bolt
25. Engine assembly

SERVICE POINTS OF REMOVAL M11SBEJ

4. REMOVAL OF COMPRESSOR <A/C>/7. OIL PUMP (POWER STEERING)

Remove the oil pump and air conditioner compressor (with the hose attached).

NOTE
Suspend the removed oil pump (by using wire or similar material) at a place where no damage will be caused during removal/installation of the engine assembly.

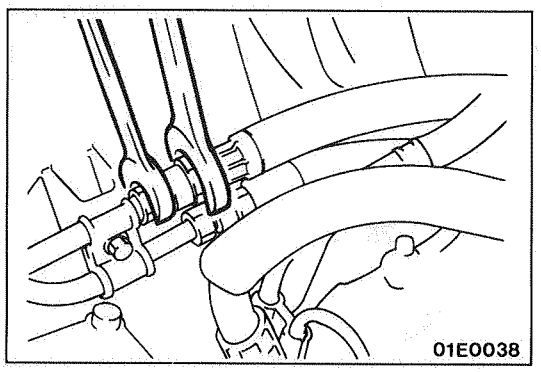

8. REMOVAL OF OIL COOLER HOSE CONNECTION

Use a spanner or similar tool to remove the oil cooler hose connection.

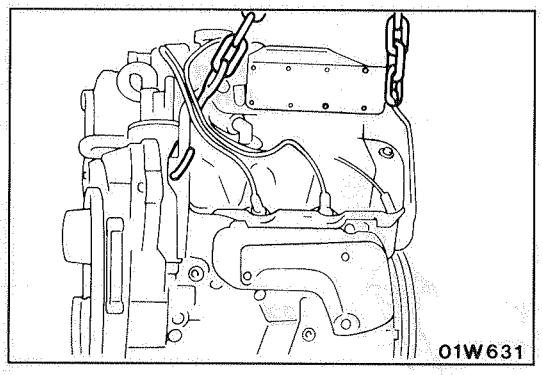

25. REMOVAL OF ENGINE ASSEMBLY

(1) Check that all cables, hoses, harness connectors, etc. are disconnected from the engine.
(2) Lift the chain block slowly to remove the engine assembly upward from the engine compartment.

SERVICE POINTS OF INSTALLATION M11SDBE

25. INSTALLATION OF ENGINE ASSEMBLY

Install the engine assembly. When doing so, check carefully that all pipes and hoses are connected, and that none are twisted, damaged, etc.

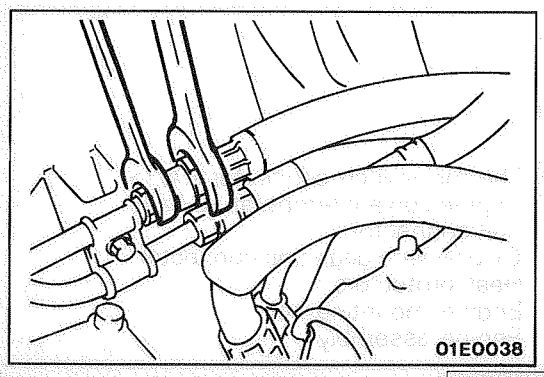

8. CONNECTION OF OIL COOLER HOSE

Use a spanner or similar tool to connect the oil cooler hose.

CAMSHAFT OIL SEAL

M11ZA--

REMOVAL AND INSTALLATION

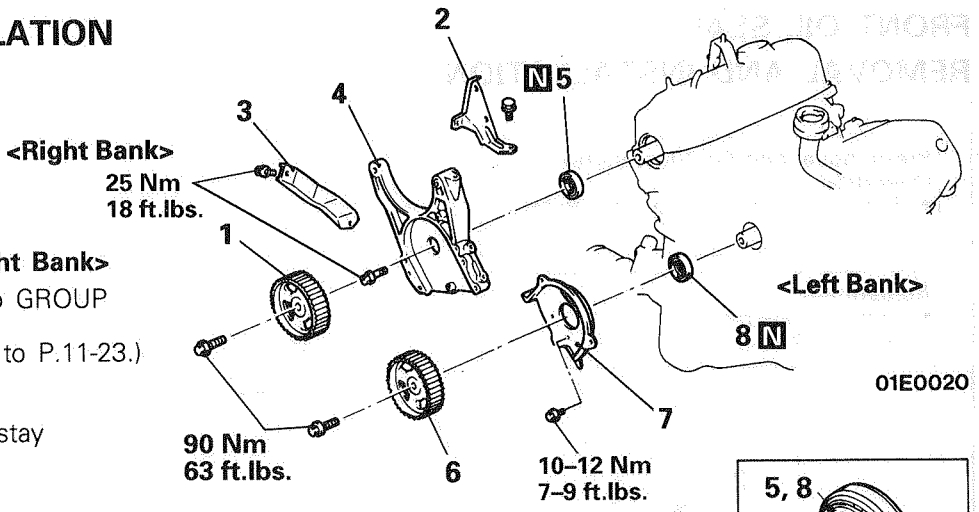

Removal steps <Right Bank>

- Alternator (Refer to GROUP 16 – Alternator)
- Timing Belt (Refer to P.11-23.)

1. Camshaft sprocket
2. Cooling fan stay
3. Alternator bracket stay
4. Alternator bracket
5. Oil seal

Removal steps <Left bank>

- Timing Belt (Refer to P.11-23.)

6. Camshaft sprocket
7. Timing belt rear cover
8. Oil seal

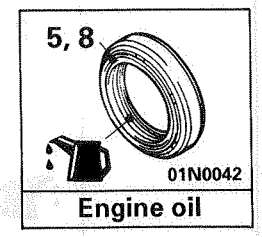

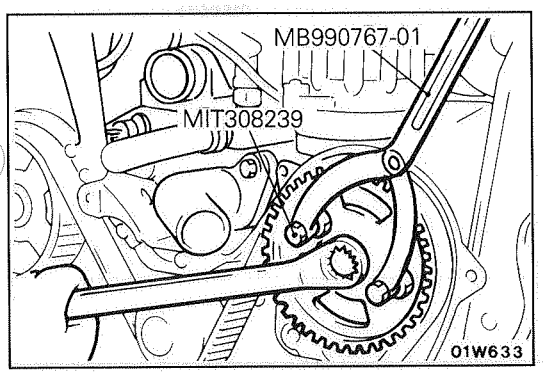

SERVICE POINTS OF REMOVAL

M11ZBAK

1./6. REMOVAL OF CAMSHAFT SPROCKET

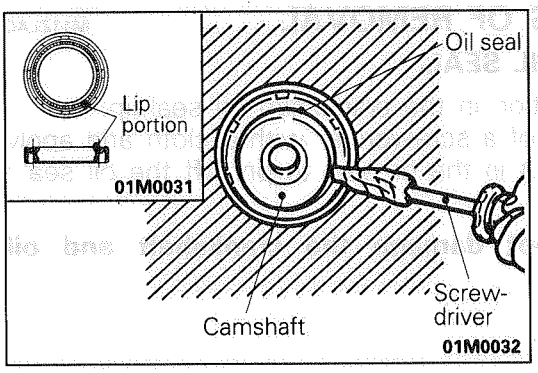

5./8. REMOVAL OF OIL SEAL

(1) Cut out a portion in the camshaft oil seal lip
(2) Cover the tip of a screwdriver with a cloth and apply it to the cutout in the oil seal to pry off the oil seal.

Caution
Take care not to damage the camshaft and cylinder head.

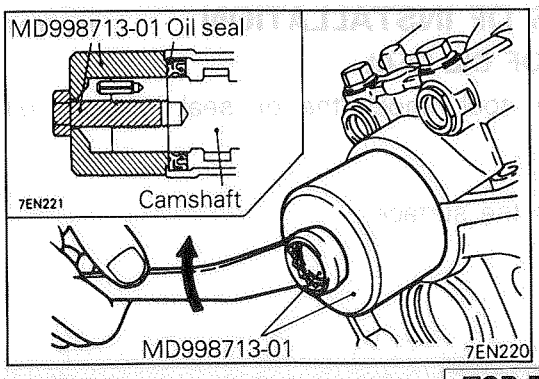

SERVICE POINT OF INSTALLATION

M11ZDAN

8./5. INSTALLATION OF OIL SEAL

(1) Apply a slight amount of engine oil all over the circumference of the camshaft oil seal lip section.
(2) Using the special tool, insert the oil seal.

CRANKSHAFT OIL SEALS

M11ZK-A

FRONT OIL SEAL
REMOVAL AND INSTALLATION

Pre-removal and Post-installation Operation
- Removal of the Timing Belt (Refer to P.11-23.)

Adjustment
- Engine Adjustment (Refer to P.11-5.)

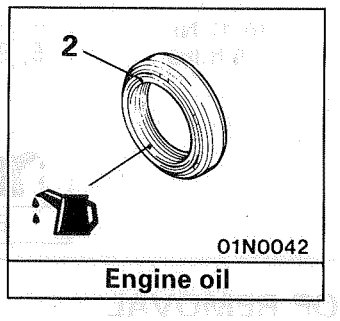

Engine oil

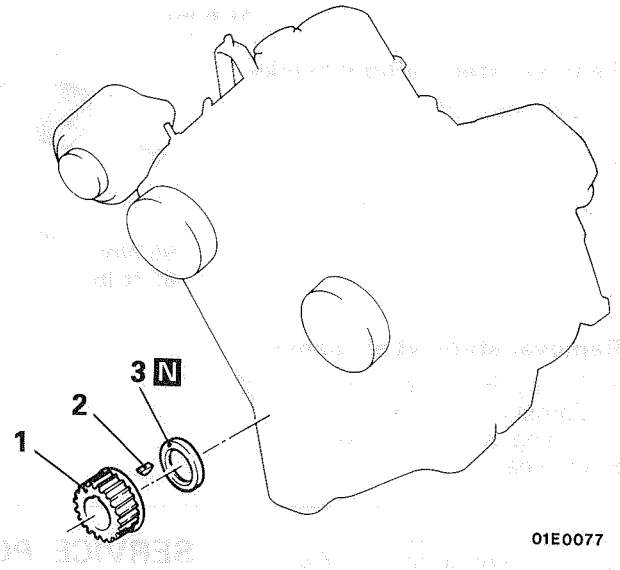

Removal steps
1. Crankshaft sprocket
2. Key
3. Oil seal

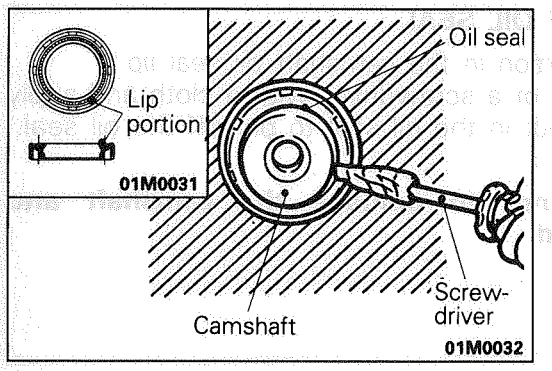

SERVICE POINTS OF REMOVAL

M11ZLAC

3. REMOVAL OF OIL SEAL

(1) Cut out a portion in the crankshaft oil seal lip.
(2) Cover the tip of a screwdriver with a cloth and apply it to the cutout in the oil seal to pry off the oil seal.

Caution
Take care not damage the crankshaft and oil pump case

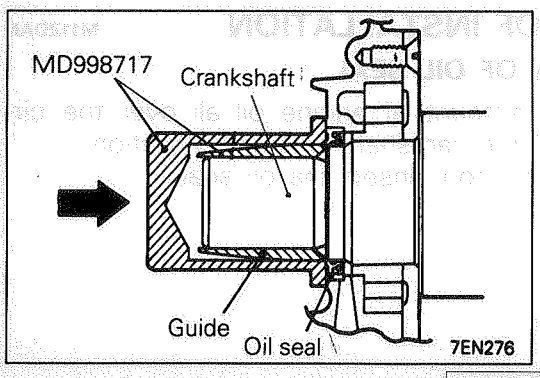

SERVICE POINTS OF INSTALLATION

M11ZNAC

3. INSTALLATION OF OIL SEAL

Using the special tool, knock the oil seal into the oil pump case.

NOTE
Knock it as far as the surface.

TSB Revision

REAR OIL SEAL
REMOVAL AND INSTALLATION

M11ZK-B

Pre-removal and Post-installation Operation
Removal and Installation
- Transmission (Refer to GROUP 22, 23 – Transmission and Transfer Assembly.)
- Clutch <M/T>

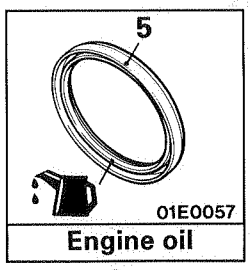

Removal steps
1. Flywheel assembly <M/T>
2. Adaptor plate A <A/T>
3. Drive plate <A/T>
4. Adaptor plate B <A/T>
5. Oil seal

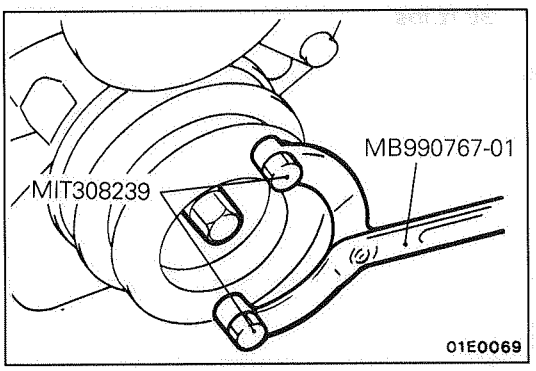

SERVICE POINTS OF REMOVAL

M11ZLAD

1. REMOVAL OF FLYWHEEL ASSEMBLY <M/T>/2. ADAPTOR PLATE A <A/T>/3. DRIVE PLATE <A/T>/4. ADAPTOR PLATE B <A/T>

Stop the crankshaft pulley from turning with the special tool, and remove the flywheel, the adaptor plate and the drive plate.

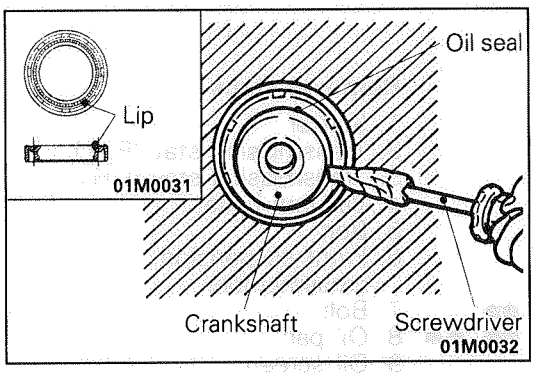

5. REMOVAL OF OIL SEAL

(1) Cut out a portion in the crankshaft oil seal lip.
(2) Cover the tip of a screwdriver with a cloth and apply it to the cutout in the oil seal to pry off the oil seal.

Caution
Take care not to damage the crankshaft and oil seal case.

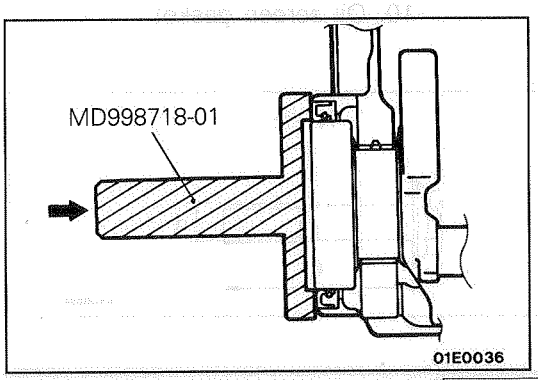

SERVICE POINTS OF INSTALLATION

M11ZNAD

5. INSTALLATION OF OIL SEAL

Using the special tool, press-fit a new crankshaft rear oil seal into the oil seal case.

OIL PAN AND OIL SCREEN

M11HA--

REMOVAL AND INSTALLATION

Pre-removal and Post-installation Operation
Removal and Installation
- Under Skid Plate, Undercover
- Front Exhaust Pipe (Refer to GROUP 15 – Exhaust Pipe and Mufflers.)

Draining and Supplying
- Engine Oil (Refer to GROUP 00 – Maintenance Service.)

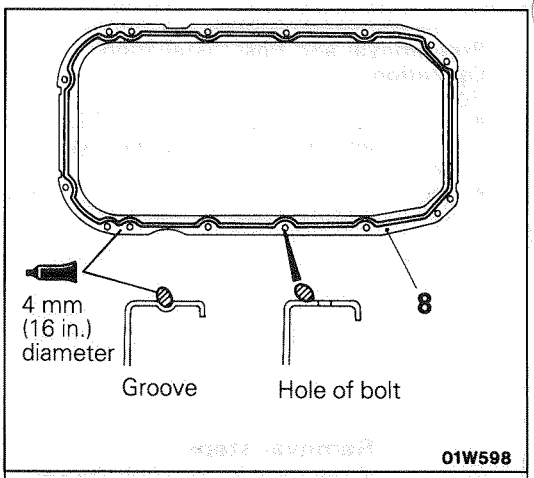

Sealant:
MITSUBISHI GENUINE PART NO. MD997110 or equivalent

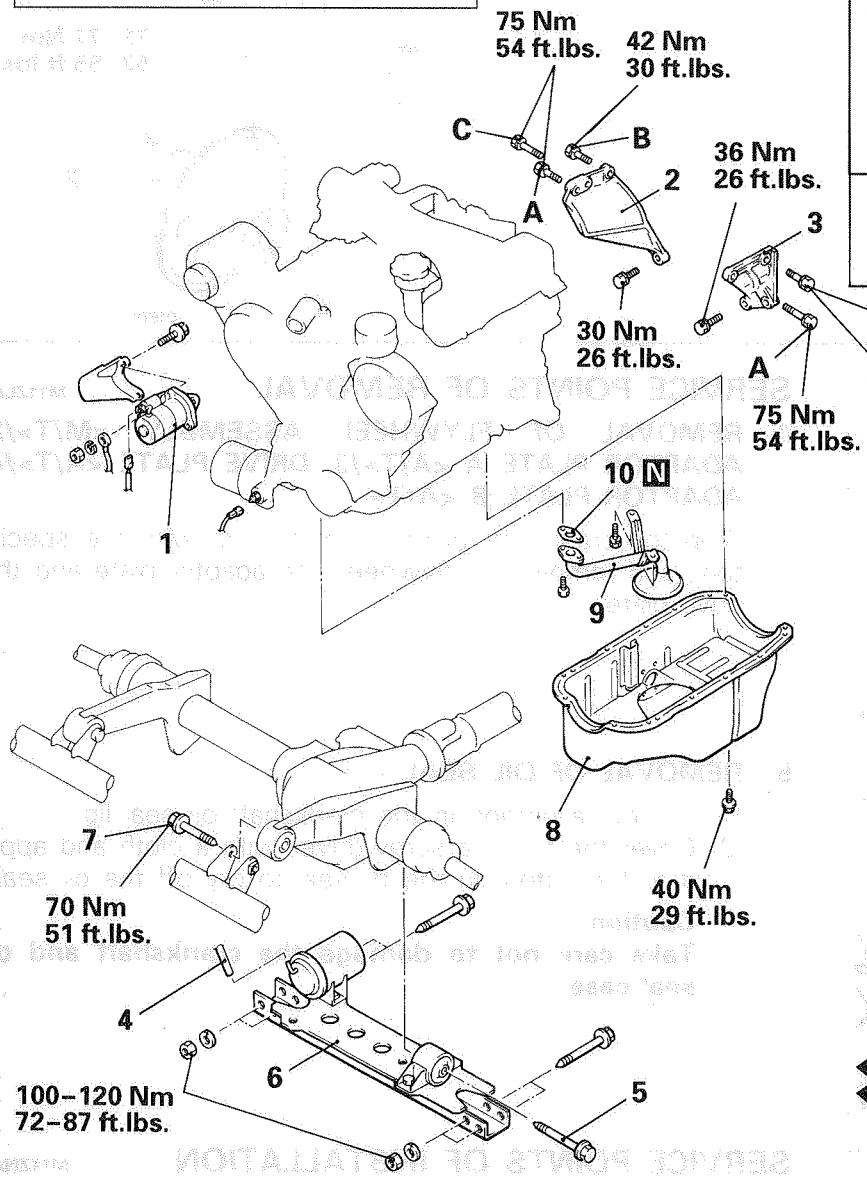

01E0024

Removal steps
1. Starter
2. Transmission stay (R.H.)
3. Transmission stay (L.H.)
4. Vacuum hose
5. Bolt
6. Front suspension crossmember
7. Bolt
8. Oil pan
9. Oil screen
10. Oil screen gasket

Symbol	d × ℓ mm (in.)	NOTE
A	12 × 35 (.47 × 1.37)	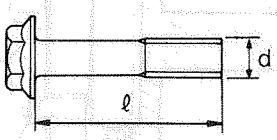
B	10 × 30 (.39 × 1.18)	
C	12 × 50 (.47 × 1.96)	

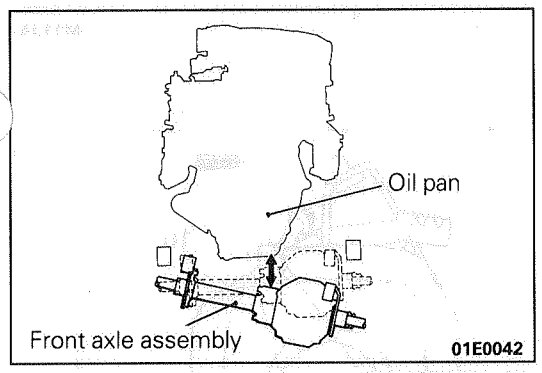

SERVICE POINTS OF REMOVAL M11HBAM

7. REMOVAL OF BOLT

After removing the mounting bolt, lower the front axle assembly as far as possible and so that there is enough space to remove the oil pan.

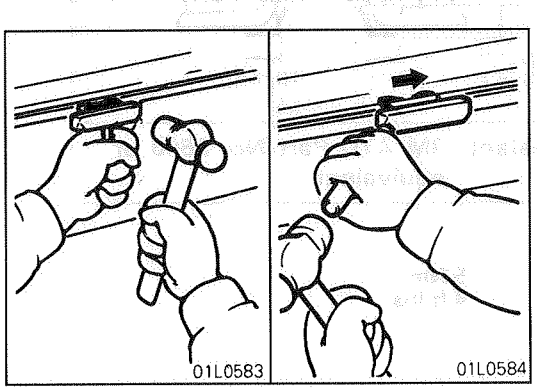

8. REMOVAL OF OIL PAN

(1) Remove oil pan bolts.
(2) Tap the general special tool in between the oil pan and cylinder block.
(3) Slide the special tool by tapping it at an angle to remove the oil pan.

Caution
The use of a screwdriver or chisel in place of the special tool can damage the gasket seat surface and cause oil leakage.

INSPECTION M11HCAH

- Check oil pan for cracks.
- Check oil pan sealant-coated surface for damage and deformation.
- Check oil screen for cracked, clogged or damaged wire net and pipe.

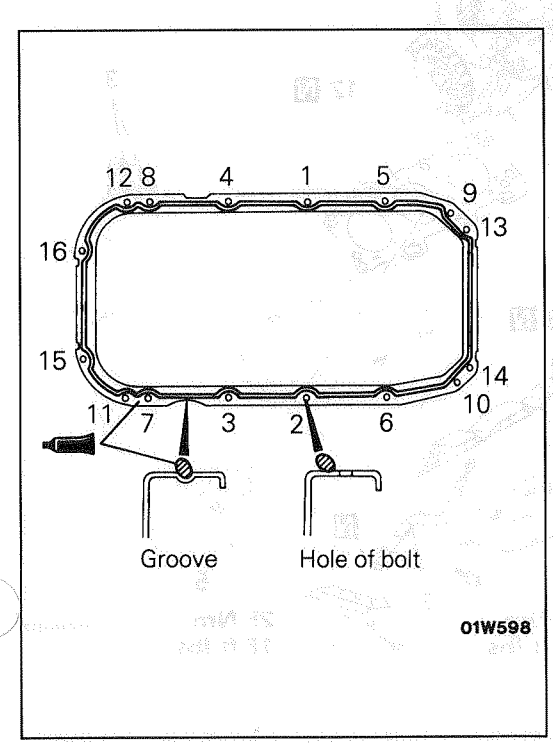

SERVICE POINTS OF INSTALLATION M11HDAW

8. INSTALLATION OF OIL PAN

(1) Remove sealant from oil pan and cylinder block mating surfaces.
(2) Degrease the sealant-coated surface and the engine mating surface.
(3) Apply the specified sealant around the gasket surface of oil pan as specified in illustration.

Specified sealant: MITSUBISHI GENUINE PART No. MD997110 or equivalent

NOTE
The sealant should be applied in a continuous bead approximately 4 mm (.16 in.) in diameter.

(4) Assemble oil pan to cylinder block within 15 minutes after applying the sealant.

Caution
1. **Tighten the oil pan mounting bolt in the order illustrated.**
2. **After installing the oil pan, wait at least 30 minutes before starting the engine.**

CYLINDER HEAD GASKET

M11JA--

REMOVAL AND INSTALLATION

Pre-removal Operation
- Draining of Engine Coolant (Refer to GROUP 14 – Service Adjustment Procedures.)
- Removal of the Timing Belt (Refer to P.11-23.)
- Removal of the Intake Manifold
- Removal of the Under Skid Plate, Undercover
- Removal of the Front Exhaust Pipe (Refer to GROUP 15 – Exhaust Pipe and Mufflers.)

Post-installation Operation
- Installation of the Front Exhaust Pipe (Refer to GROUP 15 – Exhaust Pipe and Mufflers.)
- Installation of the Under Skid Plate, Undercover
- Installation of the Intake Manifold
- Installation of the Timing Belt (Refer to P.11-23.)
- Supplying of Engine Coolant (Refer to GROUP 14 – Service Adjustment Procedures.)

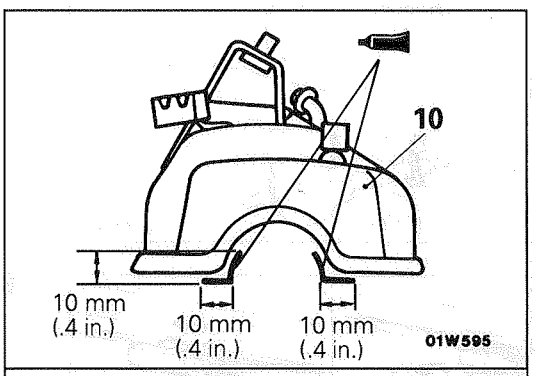

Sealant: 3M ATD Part No. 8660 or equivalent

<Right bank>

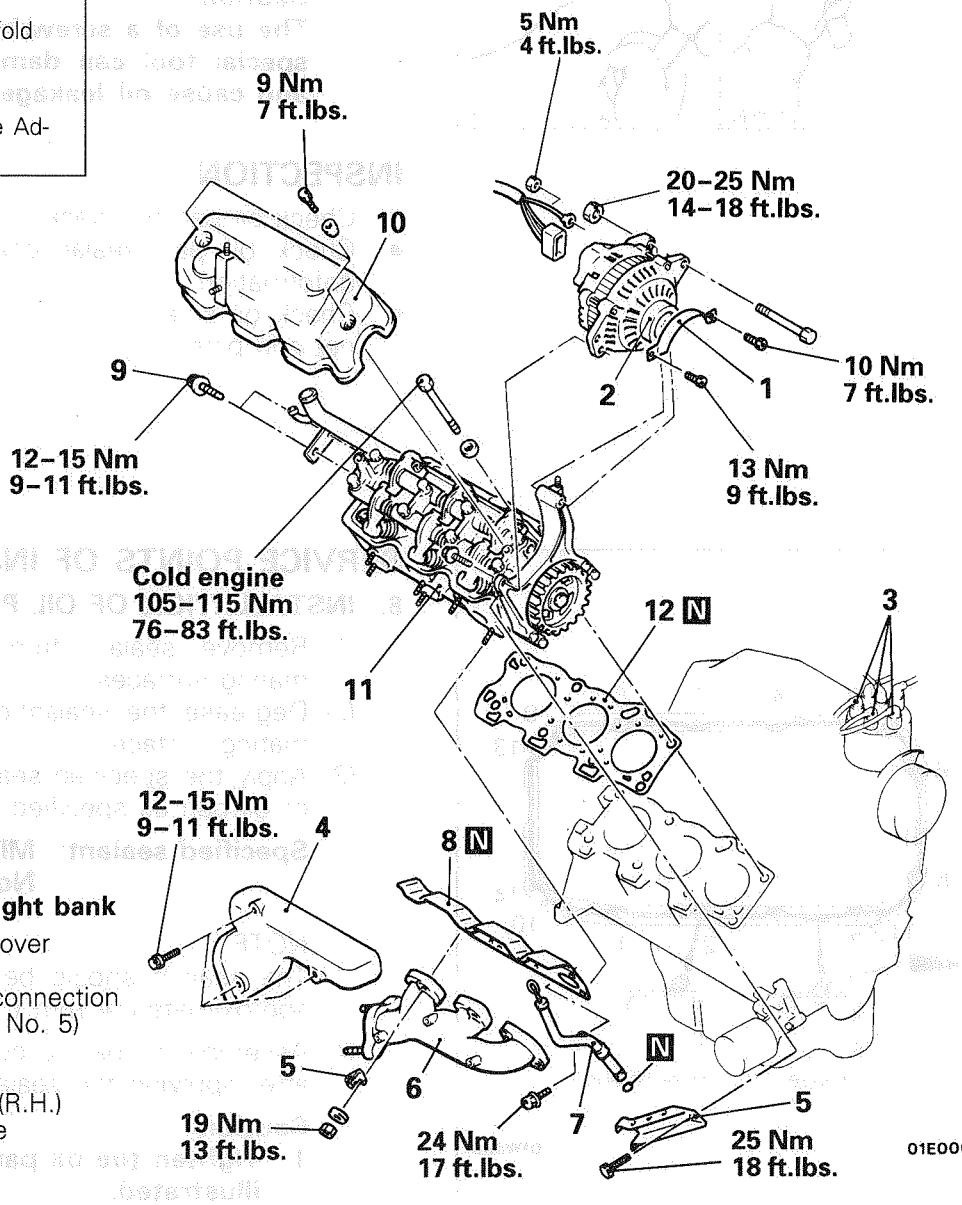

Removal steps of right bank
1. Alternator pulley cover
2. Alternator
3. Spark plug cable connection (No. 1, No. 3 and No. 5)
4. Heat protector
5. Alternator stay
6. Exhaust manifold (R.H.)
7. Oil level gage guide
8. Gasket
9. Bolt
10. Rocker cover
11. Cylinder head assembly
12. Cylinder head gasket

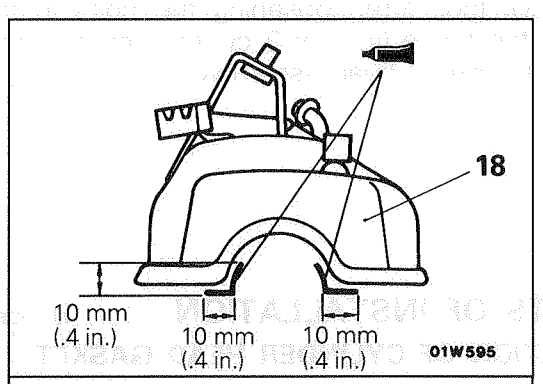

Sealant:
3M ATD Part No. 8660 or equivalent

<Left bank>

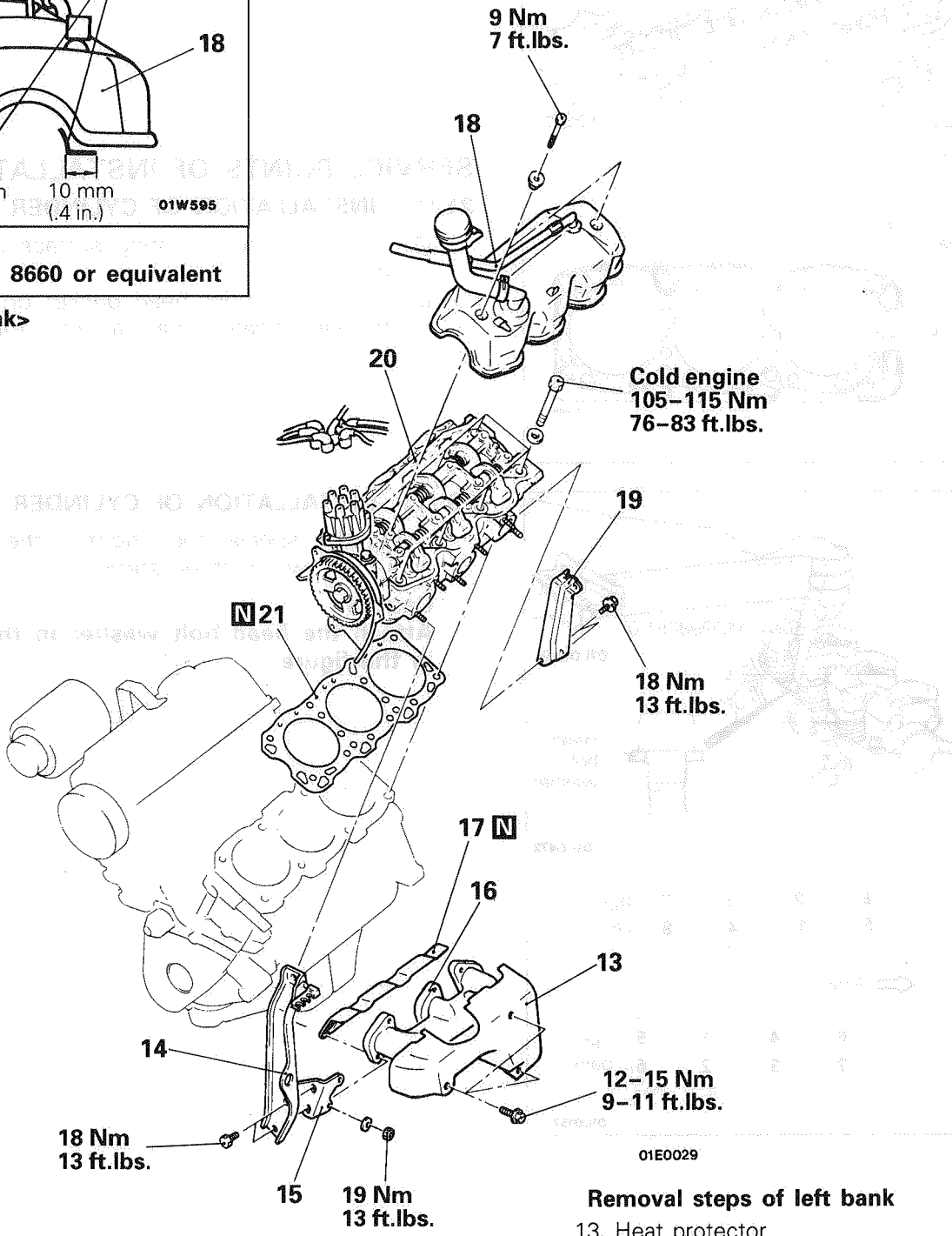

Removal steps of left bank

13. Heat protector
14. Air intake plenum stay (Front)
15. Bracket
16. Exhaust manifold (L.H.)
17. Gasket
18. Rocker cover
19. Air intake plenum stay (Rear)
20. Cylinder head assembly
21. Cylinder head gasket

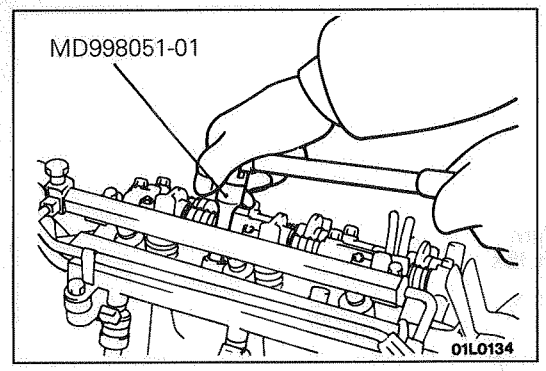

SERVICE POINTS OF REMOVAL M11JBBI

11./20. REMOVAL OF CYLINDER HEAD ASSEMBLY

Using the special tool, after loosening the bolts in the order shown in the figure (in 2 or 3 cycles), remove, and then remove the cylinder head assembly.

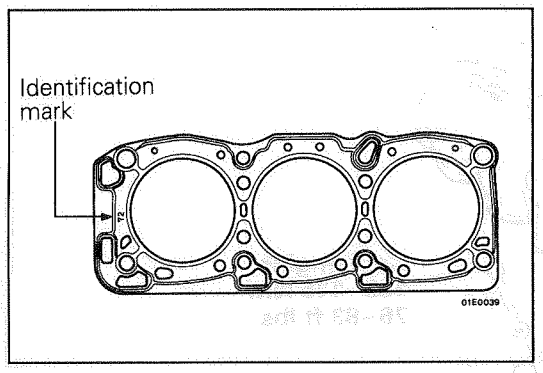

SERVICE POINTS OF INSTALLATION M11JDEM

21./12. INSTALLATION OF CYLINDER HEAD GASKET

(1) Degrease the mounting surface of the cylinder head gasket.
(2) Lay the cylinder head gasket on cylinder block with the identification mark at front top.

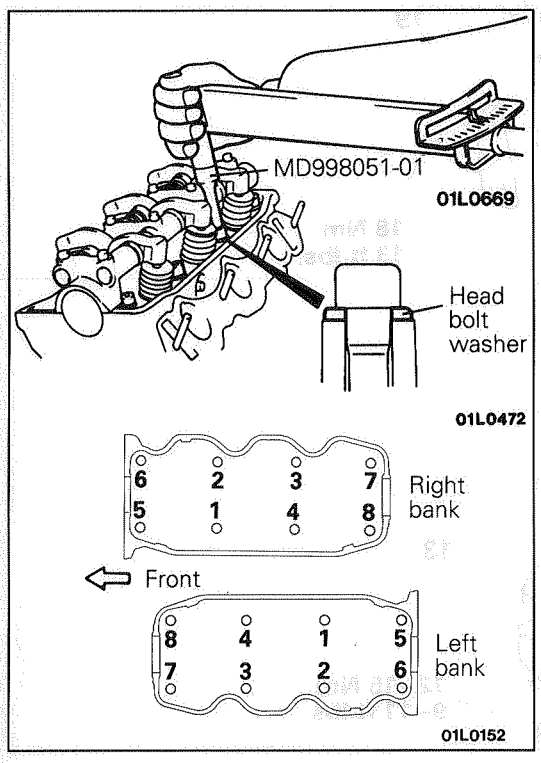

20./11. INSTALLATION OF CYLINDER HEAD ASSEMBLY

Using the special tool, tighten the bolts in the order shown in two or three steps.

Caution
Attach the head bolt washer in the direction shown in the figure.

TIMING BELT

M11KA--

REMOVAL AND INSTALLATION

Pre-removal Operation
- Draining of Engine Coolant (Refer to GROUP 14 – Service Adjustment Procedures.)

Post-installation Operation
- Filling of Engine Coolant (Refer to GROUP 14 – Service Adjustment Procedures.)
- Adjustment of the Engine (Refer to P.11-5.)

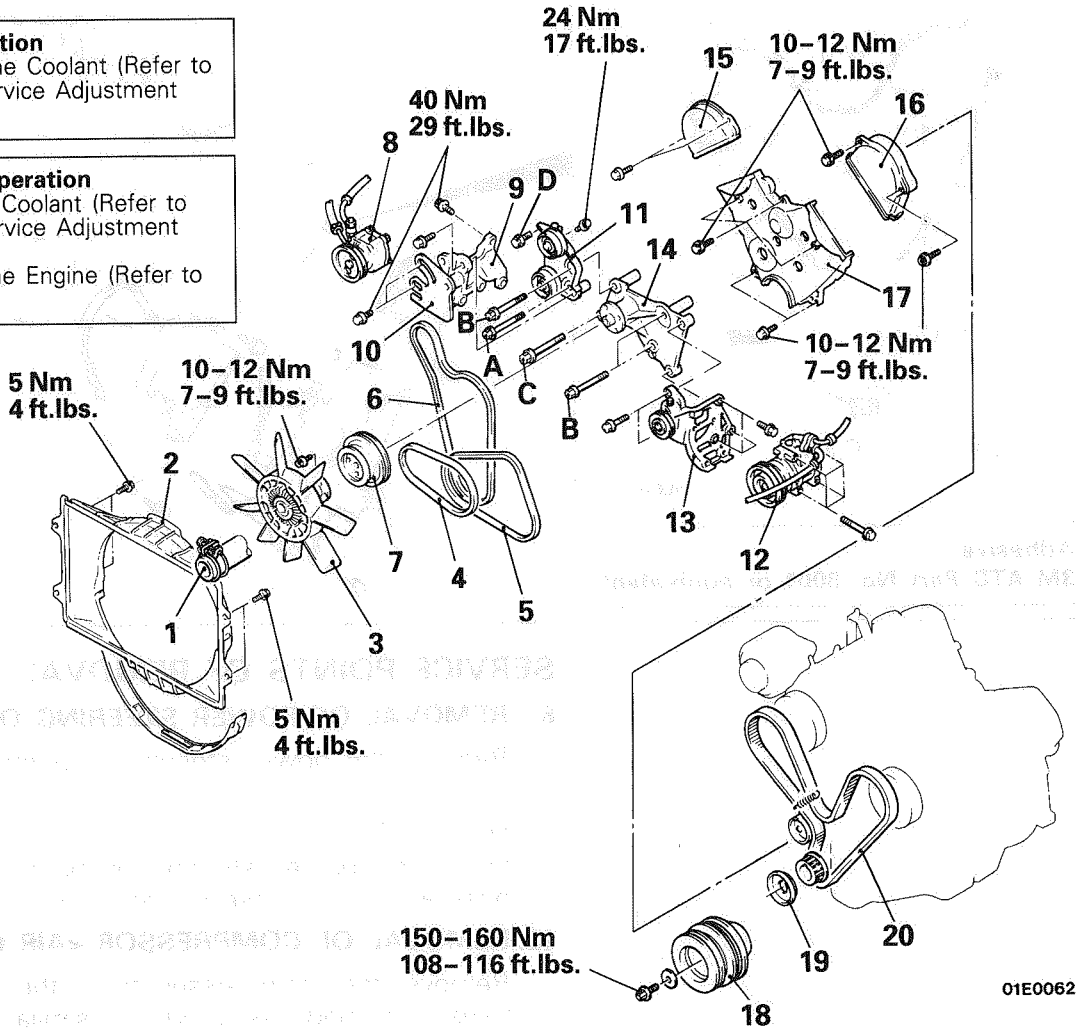

Removal steps

1. Radiator upper hose connection
2. Radiator shroud
3. Cooling fan clutch assembly
   - Adjustment of drive belt tension (Refer to P.11-11.)
4. Drive belt (Power steering)
5. Drive belt <A/C>
6. Drive belt (Alternator, Cooling fan)
7. Cooling fan pulley
8. Power steering oil pump
9. Oil pump bracket
10. Oil pump mounting bracket
11. Tension pulley bracket
12. Compressor } <A/C>
13. Compressor bracket }
14. Cooling fan bracket assembly
15. Timing belt cover outer (A)
16. Timing belt cover outer (B)
17. Timing belt cover outer (C)
18. Crankshaft pulley
19. Front flange
20. Timing belt

Symbol	Hardness category	d × ℓ mm (in.)	Torque Nm (ft.lbs.)	Note
A	7T	10 × 85 (.39 × 3.34)	42 (30)	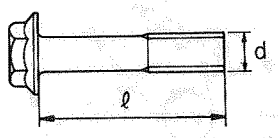
B		10 × 95 (.39 × 3.74)		
C		12 × 100 (.47 × 3.93)	75 (54)	
D		8 × 20 (.31 × .79)	16 (12)	

TSB Revision

ADHESIVE POINTS

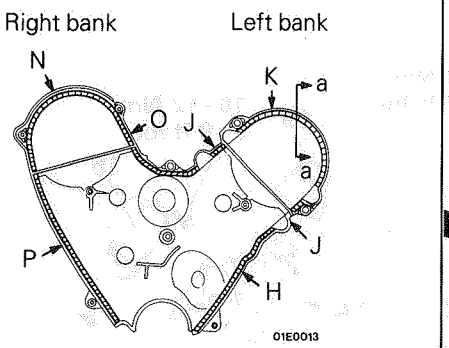

Adhesive:
3M ATD Part No. 8001 or equivalent

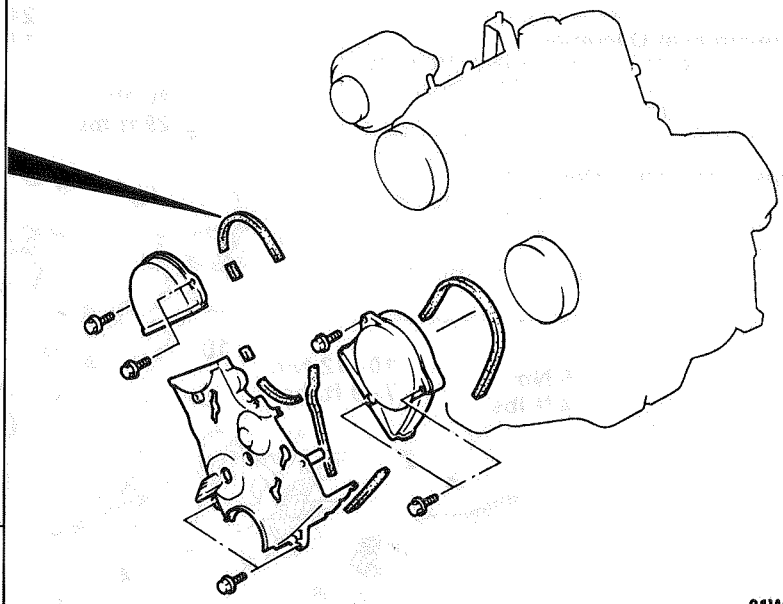

SERVICE POINTS OF REMOVAL M11KBEI

8. REMOVAL OF POWER STEERING OIL PUMP

Remove the power steering oil pump from the bracket, and hold toward the body using wire or similar materials.

NOTE
Move the power steering oil pump with the pressure hose and return hose still attached.

12. REMOVAL OF COMPRESSOR <AIR CONDITIONER>

Remove the compressor from the bracket, and hold toward the body using wire or similar materials.

NOTE
Move the compressor with the high pressure hose and low pressure hose still attached.

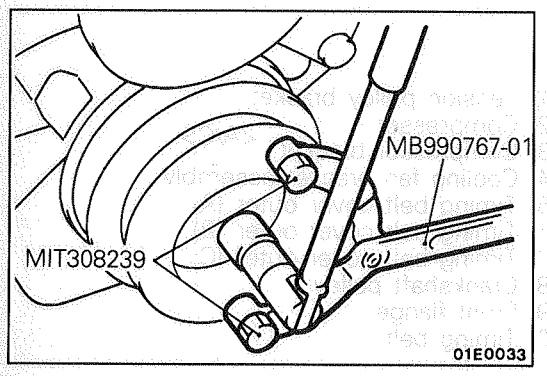

18. REMOVAL OF CRANKSHAFT PULLEY

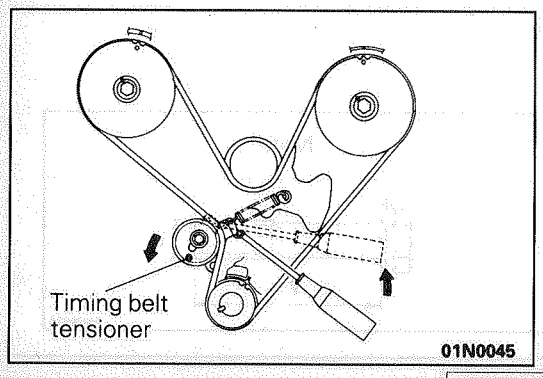

20. REMOVAL OF TIMING BELT

(1) Loosen the timing belt tensioner bolt and turn the timing belt tensioner counterclockwise along the elongated hole.

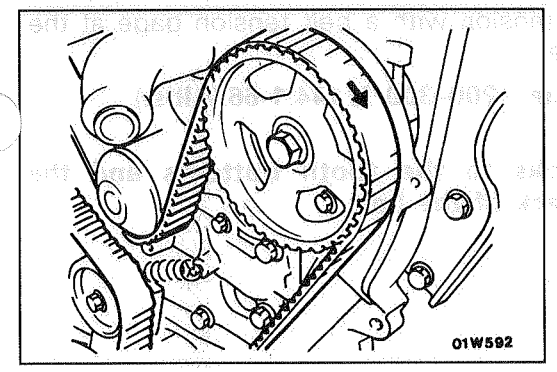

(2) When the timing belt is to be reused, in order to allow reinstallation of the belt so that it travels in the same direction as before it was removed, mark the direction of travel with an arrow before removing it.

Caution

1. **As water or oil on the belt can seriously reduce its usable life, ensure that the timing belt, sprocket, and tensioner stay clean and dry while removed, and never wash them. Parts that have become too dirty should be replaced.**
2. **When any of the parts are oily, check to see whether there are any oil leaks in any of the oil seals or the camshaft oil seal on the front of the engine.**

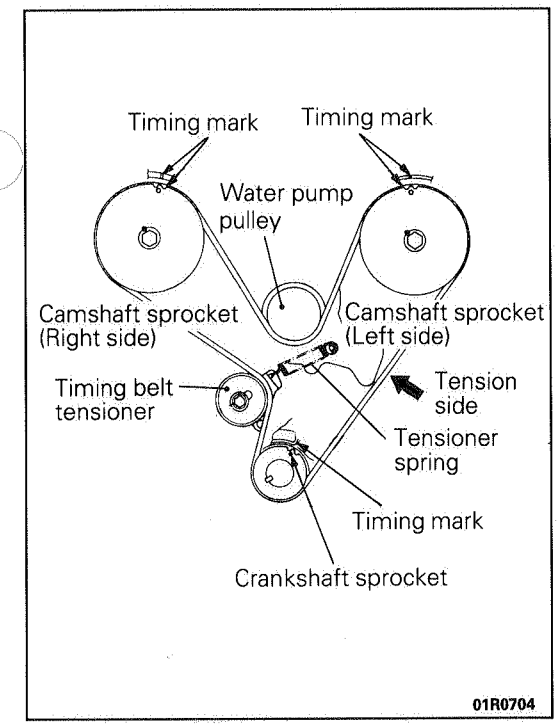

SERVICE POINTS OF INSTALLATION M11KDDE

20. INSTALLATION OF TIMING BELT

(1) Align the timing marks of the camshaft sprockets (on the right and left sides) and the crankshaft sprocket. (At the top dead point of the No. 1 cylinder compression stroke.)

(2) First, route the timing belt on the crankshaft sprocket, then on the camshaft sprocket on the side without slackness in the tight side.

(3) Next, run the timing belt onto the water pump pulley, the camshaft sprocket on the left side, and the timing belt tensioner.

(4) Apply force counterclockwise to the camshaft sprocket on the right side. When the tight side of the belt is fault, check that the timing marks are all aligned.

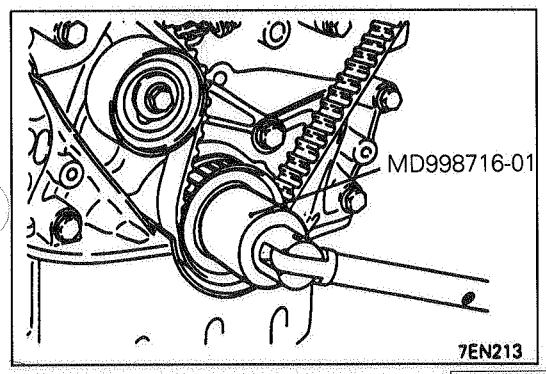

(5) Attach the flange.

(6) Back off the fixing bolts of the temporarily tightened tensioner one or two turns and tighten the timing belt with the tensioner spring force.

(7) Using the special tool, turn the crankshaft two turns in the normal rotating direction (clockwise).

NOTE
Turn smoothly, but not in the opposite direction (counterclockwise).

(8) Re-align the sprockets timing marks and tighten the tensioner fixing bolts.

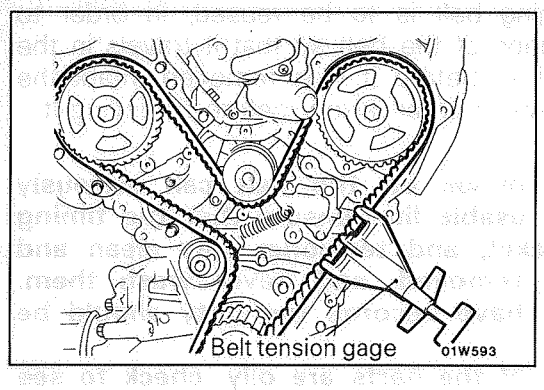

(9) Measure belt tension with a belt tension gage at the indicated place.

Standard value: 200–300 N (44.1-66.1 lbs.)

Caution
Contact the hooks to the tooth bottoms and the spindle to the back of the belt.

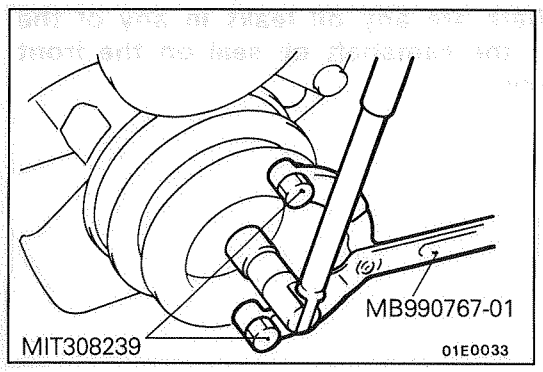

18. INSTALLATION OF CRANKSHAFT PULLEY

Using the special tool, attach the crankshaft pulley to the crankshaft.

ENGINE OIL COOLER

REMOVAL AND INSTALLATION

M11MA--

Pre-removal Operation
- Removal of the Radiator Grille

Post-installation Operation
- Installation of the Radiator Grille
- Supplying and Checking of Engine Oil

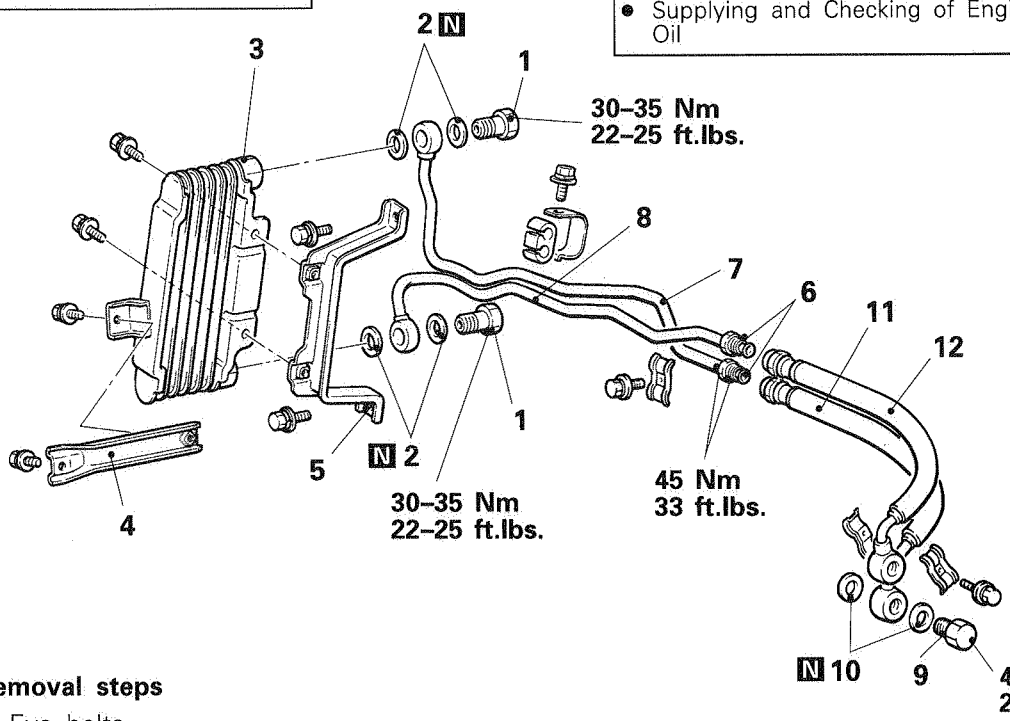

04E0002

Removal steps

◆◆ 1. Eye bolts
2. Gaskets
3. Engine oil cooler
4. Stay
5. Bracket
6. Engine oil cooler pipe connection
7. Return pipe
8. Feed pipe
◆◆ 9. Eye bolts
10. Gaskets
◆◆ 11. Return hose
◆◆ 12. Feed hose

SERVICE POINT OF REMOVAL

M11MBAC

1. REMOVAL OF EYE BOLTS

Caution
Be sure to hold the weld nut of the oil cooler while loosening the eye bolt.

INSPECTION

M11MCAC

- Check for foreign material between oil cooler fins.
- Check the oil cooler fins for bend or damage.
- Check the oil cooler pipes for crack, damage, clogging or deterioration.

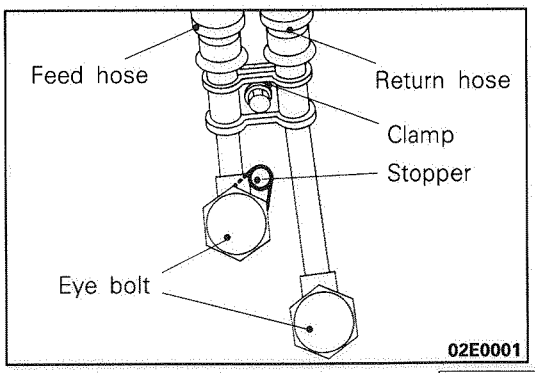

02E0001

SERVICE POINTS OF INSTALLATION

M11MDAA

12. INSTALLATION OF FEED HOSE/11. RETURN HOSE/9. EYE BOLTS (ENGINE SIDE)

(1) Provisionally tighten the eye bolts, and install the clamp so that it touches the crimps on the hoses.
(2) Fully tighten the eye bolt on the return hose.
(3) Place the feed hose against the stopper, and fully tighten the eye bolt on the feed hose.

NOTES

FUEL

CONTENTS

M13AA--

AUTO-CRUISE CONTROL SYSTEM .. 105

AUTO-CRUISE CONTROL 131

SERVICE ADJUSTMENT PROCEDURES ... 126

Auto-cruise Control Main Switch Inspection 127
Auto-cruise Control Switch Inspection ... 128
Control Cables Inspection and Adjustment 126
Individual Parts Inspection 129

SPECIAL TOOLS 105

SPECIFICATIONS 105

General Specifications 105
Service Specifications 105

TROUBLESHOOTING 106

Input Checking 124
Self-diagnosis Checking 122
Troubleshooting Quick-reference Chart .. 106

ENGINE CONTROL 103

ACCELERATOR CABLE AND PEDAL 104

SERVICE ADJUSTMENT PROCEDURES ... 103

Accelerator Cable Free Play Adjustment 103

SPECIFICATIONS 103

Service Specifications 103

TROUBLESHOOTING 103

Accelerator Cable and Accelerator Pedal 103

FUEL SYSTEM 3

FUEL LINE AND VAPOR LINE 101

FUEL PUMP 97

FUEL TANK 98

GENERAL INFORMATION 3

MPI System Diagram 3

ON-VEHICLE INSPECTION OF MPI COMPONENTS 31

Air Conditioner Switch and Power Relay 70
Air Flow Sensor 42
Anti-lock Braking Signal 90
Barometric Pressure Sensor 48
Component Inspection Procedure 34
Component Location 31
Crank Angle Sensor 60
Engine Control Unit Power Ground 38
Engine Control Unit Terminal Voltage Check 94
Engine Coolant Temperature Sensor 50
Fuel Pressure 91
Fuel Pressure Test 91
Fuel Pump 39
Fuel Pump Operation Check 91
Idle Position Switch 54
Idle Speed Control Servo (Stepper Motor) 79

Ignition Coil and Power Transistor 84
Ignition Switch-ST and Inhibitor Switch [A/T] 64
Ignition Switch-ST [M/T] 62
Injectors 75
Intake Air Temperature Sensor 46
Oxygen Sensor 72
Power Steering Fluid Pressure Switch .. 68
Power Supply and Ignition Switch-IG 35
Purge Control Solenoid Valve 88
Throttle Position Sensor 52
Top Dead Center Sensor 56
Vehicle Speed Sensor 66

SERVICE ADJUSTMENT PROCEDURES ... 26
Accelerator Cable Inspection and Adjustment 14
Basic Idle Speed Adjustment 26
Fixed SAS Adjustment 30
Fuel Filter Replacement 30
Fuel Gage Unit Replacement 31
Fuel Pump Operation Check 15
How To Reduce The Fuel Line Internal Pressure 16
Idle Position Switch and Throttle Position Sensor Adjustment 28
Overfill Limitter (2-way) Valve Replacement 31
Throttle Body (Throttle Valve Area) Cleaning 28

SPECIAL TOOLS 5

SPECIFICATIONS 4
General Specifications 4
Sealant 5
Service Specifications 5

TROUBLESHOOTING 7
Check Chart classified by Problem Symptoms 15
Circuit Diagram 17
Engine Warning Light 9
Explanation and Precaution Related to Harness Checking 8
Explanation of Troubleshooting Procedures 7
Fuel Tank and Fuel Line 25
Problem Symptoms Table (For Your Information) 16
Read Out of Malfunction Code 14
Self-diagnosis 10

FUEL SYSTEM

GENERAL INFORMATION

MPI SYSTEM DIAGRAM

E13BBAG

*1 Oxygen sensor *2 Air-flow sensor *3 Intake air temperature sensor *4 Engine coolant temperature sensor *5 Throttle position sensor *6 Idle position switch *7 Top dead center sensor *8 Crank angle sensor *9 Barometric pressure sensor	• Ignition switch-ST • Ignition switch-IG1 • Power supply • Vehicle-speed sensor • Air conditioner switch • Power steering fluid pressure switch • Inhibitor switch <A/T>	⇨ Engine control unit ⇨	★1 Injector ★2 Idle speed control servo ★3 Purge control solenoid valve • Fuel pump control (control relay) • Air conditioner power relay • Ignition timing control • Self-diagnosis circuit • Engine warning light

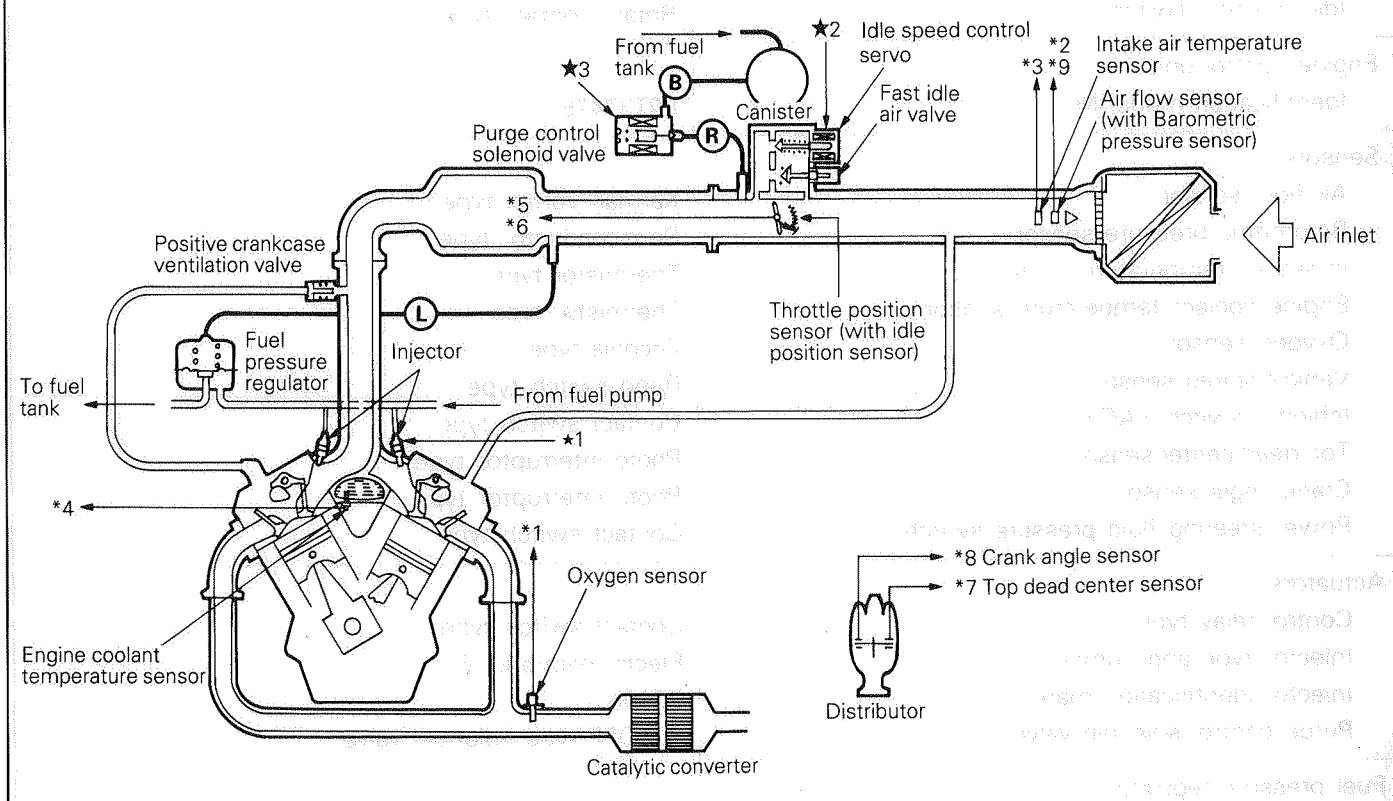

7FU1163

Vacuum hose color
R: Red
B: Black
L: Light Blue

SPECIFICATIONS

GENERAL SPECIFICATIONS

M13CA-A

Items	Specifications
Fuel	
Tank capacity dm^3 (U.S.gal., Imp.gal.)	92 (24.3, 20.2)
Fuel pump	
Type	Electrical, in-tank type
Driven by	Electric motor
Throttle body	
Throttle bore mm (in.)	55 (2.165)
Throttle position sensor	Variable resistor type
Idle speed control servo	Stepper motor type Stepper motor type by-pass air control system with the Fast Idle Air Valve
Idle position switch	Rotary contact type
Engine control unit	
Identification model No.	E2T37475
Sensors	
Air flow sensor	Karman vortex type
Barometric pressure sensor	Semiconductor type
Intake air temperature sensor	Thermistor type
Engine coolant temperature sensor	Thermistor type
Oxygen sensor	Zirconia type
Vehicle-speed sensor	Reed switch type
Inhibitor switch <A/T>	Contact switch type
Top dead center sensor	Photo interruptor type
Crank angle sensor	Photo interruptor type
Power steering fluid pressure switch	Contact switch type
Actuators	
Control relay type	Contact switch type
Injector type and number	Electromagnetic, 6
Injector identification mark	B210H
Purge control solenoid valve	ON/OFF type solenoid valve
Fuel pressure regulator	
Regulated pressure kPa (psi)	335 (47.6)

SERVICE SPECIFICATIONS

M13CB-A

Items		Specifications
Standard value		
Accelerator cable play	mm (in.)	1–2 (.04–.08)
Basic ignition timing		5° ± 2° BTDC at curb idle
Curb idle speed	rpm	700 ± 100
Idle speed when air conditioner ON	rpm	900 at neutral position 650 at D range <A/T>
Basic idle speed	rpm	700 ± 50
Throttle position sensor output voltage	V	400–1000
Throttle position sensor resistance	kΩ	3.5–6.5
Idle speed control servo (stepper motor) coil resistance [at 20°C (68°F)]	Ω	28–33
Intake air temperature sensor resistance [at 20°C (68°F)]	kΩ	2.7
Engine coolant temperature sensor resistance	kΩ	
20°C (68°F)		2.4
80°C (176°F)		0.3
Fuel pressure (at curb idle)	kPa (psi)	
Vacuum hose disconnection		330–350 (47–50)
Vacuum hose connection		Approx. 270 (38)
Injector coil resistance [at 20°C (68°F)]	Ω	13–16

SEALANT

M13CE-A

Items	Specified sealant
Engine coolant temperature sensor threaded portion	3M Nut Locking Part No. 4171 or equivalent

SPECIAL TOOLS

M13DA-A

Tool	Number	Name	Use
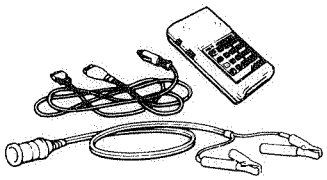	MB991341	Multi-use tester assembly	• Reading diagnosis code • MPI system inspection
	MB991423	ROM pack (for multi-use tester)	
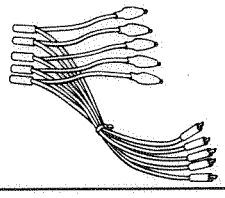	MB991348	Test harness set	• Adjustment of throttle position sensor • Inspection with oscilloscope

Tool	Number	Name	Use
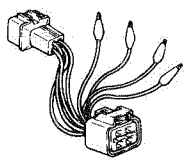	MD998464-01 OPTIONAL: AVAILABLE FROM OTC	Test harness (4 pin, square)	• Oxygen sensor inspection
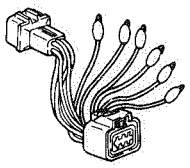	MD998463-01 OPTIONAL: AVAILABLE FROM OTC	Test harness (6 pin, square)	• Idle speed control servo inspection • Inspection with oscilloscope
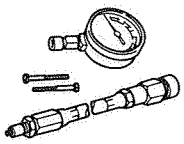	MIT210196	Fuel pressure test assembly	• Measurement of fuel pressure
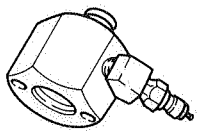	MIT215144	Fuel pressure test adapter [used with MIT210196]	

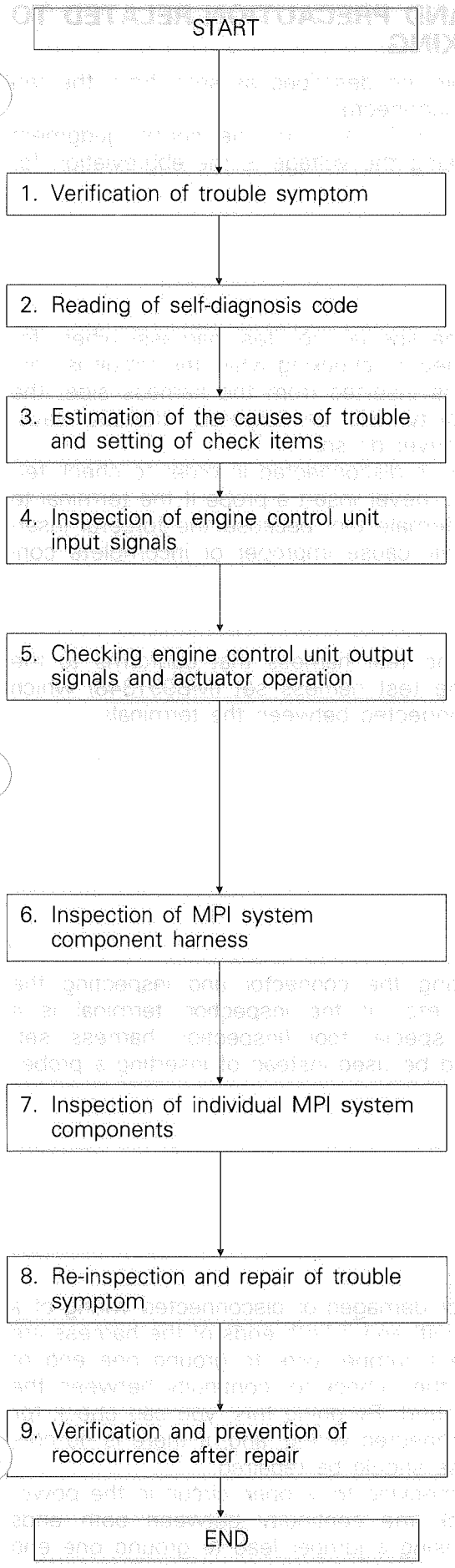

TROUBLESHOOTING

M13EBCB

EXPLANATION OF TROUBLESHOOTING PROCEDURES

Effective troubleshooting procedures for MPI system problems are given below.

1. Verification of trouble symptom
   - Reproduce trouble symptom and verify the characteristics of the trouble and the conditions (engine condition, driving conditions, etc.) under which it is produced.
2. Reading of self-diagnosis code
   - Read self-diagnosis code and if a malfunction code is output, locate and correct the trouble referring to the DIAGNOSIS CHART.
3. Estimation of the causes of trouble and setting of check items
   - Referring to the Check Chart, verify the check items and checking order for the trouble symptom.
4. Checking engine control unit input and output signals
   - Using a multi-use tester or analyzer, check the input and output signals of the engine control unit.
   - If the input and output signals are normal, the sensor input/actuator control is judged as normal. Then, check the input and output signals of the next check item.
5. Checking engine control unit output signals and actuator operation
   - Use the multi-use tester (MUT) to check the signals output from the engine control unit. Also, drive the actuator using the actuator test function to check the actuator operation.
   - Use an oscilloscope to check the signals output from the engine control unit.
   - If the signals output from the engine control unit and the operation of the actuator are normal, the actuator control is judged to be normal. Then, check the next check item.
6. Inspection of MPI system component harness
   - If the engine control unit input/output signals are abnormal, check the MPI system component body harness and repair as necessary.
   - After repairing, check the engine control unit input/output signals again. If they are normal, proceed to check the input/output signals of the next check item.
7. Inspection of individual MPI system components
   - If the body harness is normal but the engine control unit input/output signals are abnormal, check individual MPI system components and repair or replace as necessary.
   - After repair or replacement, check the engine control unit input/output signals again. If they are normal, proceed to check the input/output signals of the next check item.
8. Re-inspection and repair of trouble symptom
   - If the harness inspection and individual component inspection results are normal but the engine control unit input/output signals are abnormal, re-examine the causes of trouble referring to the troubleshooting hints and the checks and repairs included in other groups.
9. Verification and prevention of reoccurrence after repair
   - Perform tests to see if the same problems occur again and make sure that the same problems will not be repeated.
   - Remove the true causes of the trouble to prevent its reoccurrence.

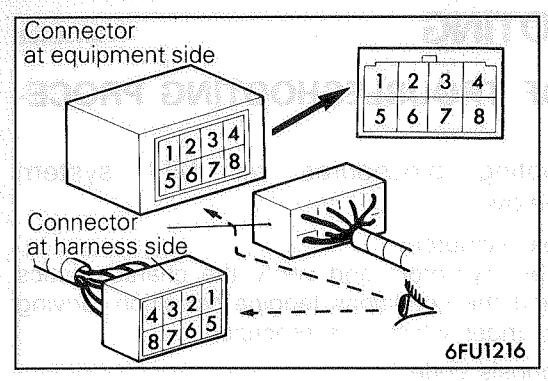

EXPLANATION AND PRECAUTION RELATED TO HARNESS CHECKING

- Connector symbols are described as seen from the terminal end for the connector.
- The abbreviation "SV" used for the normal judgment value when checking the voltage is the abbreviation for system voltage.

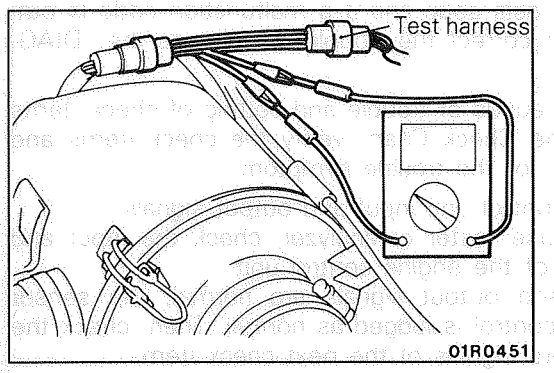

- Be sure to use the special tool (test harness) when, for a waterproof connector, checking while the circuit is conductive. If probe is inserted from the harness side, the waterproof capability will be lowered, thereby causing/corrosion, so never do so.
- When a connector is disconnected in order to check terminal voltage, etc., never insert a probe if the terminal to be checked is a female pin, because the forceful insertion of a probe will cause improper or incomplete contact.

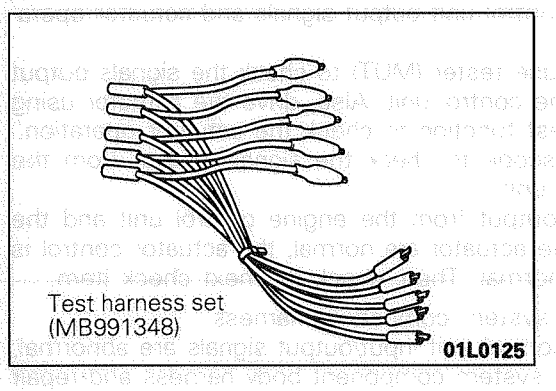

- Also, if there is no test harness that conforms to the connector, use the test harness set (MB991348) which can be directly connected between the terminals.

- When disconnecting the connector and inspecting the terminal voltage, etc., if the inspection terminal is a female pin, the special tool (inspection harness set: MB991223) should be used instead of inserting a probe.

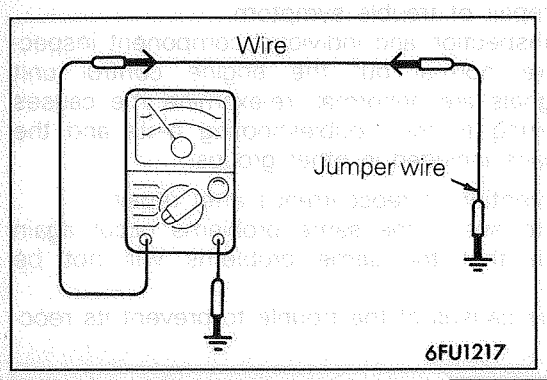

- When checking for damaged or disconnected wiring of a harness (open circuit) and if both ends of the harness are unconnected, use a jumper wire to ground one end of the harness, and then check for continuity between the other end and ground. By doing this, you can check for damaged or disconnected wiring, and, if there is no continuity, the harness should be repaired.
  However, when checking for a open circuit in the power supply line, check the continuity between both ends directly, without using a jumper lead to ground one end of the harness.

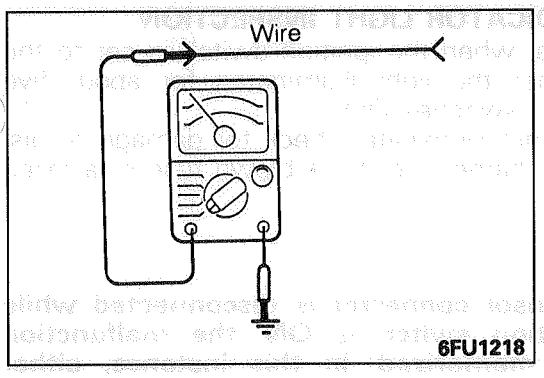

- When checking for a harness short-circuit (short-circuit to ground), open one end of the harness and then check for continuity between the other end and ground. If there is continuity, the harness is short-circuited to ground and should be repaired.

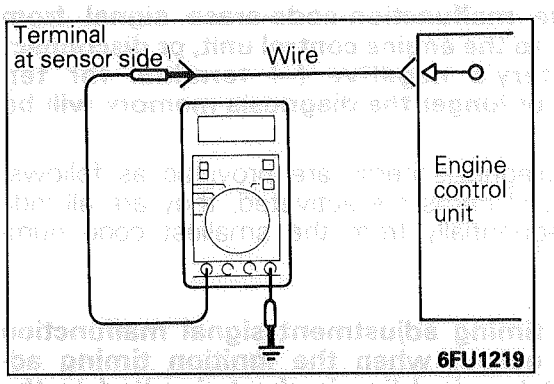

- If the voltage (power-supply voltage) supplied to a sensor is not normal, repair the harness. If the voltage to the sensor is still not normal after the harness has been repaired, replace the engine control unit and check again.

ENGINE WARNING LIGHT (MALFUNCTION INDICATOR LIGHT)

Among the self-diagnosis items, a malfunction indicator light comes on to notify the driver of the emission control items when an irregularity is detected. However, when an irregular signal returns to normal and the engine control unit judges that it has returned to normal, the engine warning light goes out. Moreover, when the ignition switch is turned off, the light goes out. Even if the ignition switch is turned on again, the light does not come on until the irregularity is detected. Here, immediately after the ignition switch is turn on, the malfunction indicator light is lit for 5 seconds to indicated that the malfunction indicator light operates normally.

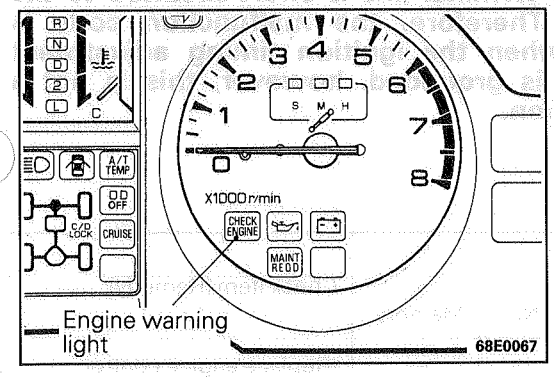

Item indicated by the lightening engine warning light

Engine control unit	Crank angle sensor
Oxygen sensor	Top dead center sensor
Air flow sensor	Barometric pressure sensor
Intake air temperature sensor	Ignition timing adjustment signal
Throttle position sensor	Injector
Engine coolant temperature sensor	

Caution
Engine warning light will come on when the line of terminal for ignition timing adjustment is short-circuited. Therefore, the light will come on even when the terminal for ignition timing adjustment is granded at the time of adjusting ignition timing. In this case, however, it is not abnormal.

MALFUNCTION INDICATOR LIGHT INSPECTION

(1) Check to be sure, when the ignition switch is set to the "ON"position, that the light illuminates for about five seconds and then switches OFF.
(2) If the light does not illuminate, check for damage or disconnection of the harness, or for a blown fuse or a failed light bulb.

SELF-DIAGNOSIS

The engine control unit monitors the input/output signals (some signals at all times and the others under specified conditions) of the engine control unit. When it is noticed that an irregularity has continued for a specified time or longer from when the irregular signal is initially monitored, passing a certain number, the engine control unit judges that an irregularity has occurred, memorizes the malfunction code, and outputs the signal to the self-diagnosis output terminals. There are 13 diagnosis items, including the normal state, and the diagnosis results can be read out with a voltmeter or multi-use tester (MUT). Moreover, since memorization of the malfunction codes is backed up directly by the battery, the diagnosis results are memorized even if the ignition key is turned off. The malfunction codes will, however, be erased when the battery terminal or the engine control unit connector is disconnected. The malfunction codes are also erased by setting the ignition switch to the "ON" position and then sending the malfunction-code-erase signal from the MUT to the engine control unit.

Caution
If the sensor connector is disconnected while the ignition switch is ON, the malfunction code is memorized. In this instance, either send the malfunction-code-erase signal from the MUT to the engine control unit, or disconnect the battery's negative (–) terminal for ten seconds or longer the diagnosis memory will be erased.

The 13 diagnosis items are provided as follows, and if plural items are activated, they are all indicated sequentially from the smallest code number.

Caution
Ignition timing adjustment signal malfunction code is output when the ignition timing adjustment terminal line is short-circuited to the ground. Therefore, the malfunction code is output when the ignition timing adjustment terminal is grounded, however, this is not a malfunction.

DIAGNOSIS CHART

Output preference order	Diagnosis item	Diagnosis code			Check item (Remedy)
		Output signal pattern	No.	Memory	
1	Engine control unit	H / L	—	—	(Replace engine control unit)
2	Oxygen sensor	H / L	11	Retained	• Harness and connector • Oxygen sensor • Fuel pressure • Injectors (Replace it defective.) • Intake air leaks
3	Air flow sensor	H / L	12	Retained	• Harness and connector (If harness and connector are normal, replace air flow sensor assembly.)
4	Intake air temperature sensor	H / L	13	Retained	• Harness and connector • Intake air temperature sensor
5	Throttle position sensor	H / L	14	Retained	• Harness and connector • Throttle position sensor • Idle position switch
6	Engine coolant temperature sensor	H / L	21	Retained	• Harness and connector • Engine coolant temperature sensor

Output preference order	Diagnosis item	Diagnosis code			Check item (Remedy)
		Output signal pattern	No.	Memory	
7	Crank angle sensor	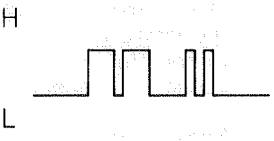	22	Retained	• Harness and connector (If harness and a connector are normal, replace distributor assembly.)
8	Top dead center sensor		23	Retained	• Harness and connector (If harness and a connector are normal, replace distributor assembly.)
9	Vehicle speed sensor (reed switch)		24	Retained	• Harness and connector • Vehicle speed sensor (reed switch)
10	Barometric pressure sensor		25	Retained	• Harness and connector (If harness and connector are normal, replace barometric sensor assembly.)
11	Ignition timing adjustment signal		36	—	• Harness and connector
12	Injector	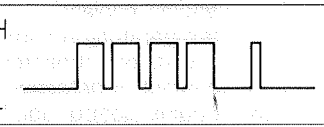	41	Retained	• Harness and connector • Injector oil resistance
13	Normal state		—	—	—

NOTE
Replace the engine control unit if a malfunction code is output although the inspection reveals that there is no problem with the check items.

PROBLEM SYMPTOMS TABLE

Malfunction code No.	Diagnosis item	Diagnosis contents	Probable cause	Remark (Trouble symptom, etc)
—	Engine control unit	Abnormality in engine control unit	—	• Engine stalls • Starting is impossible
11	Oxygen sensor	Oxygen sensor signal voltage does not change (lean/rich) even when air/fuel ratio feedback control (closed loop control) operates.	(1) Oxygen sensor malfunction (2) Broken circuit wire or short in oxygen sensor circuit, or connector contact is defective	• Reduction in exhaust gas purification efficiency*
			(3) Inappropriate fuel pressure (4) Injector malfunction (5) Air leaking in through clearance in gasket (6) Engine control unit malfunction	• Reduction in exhaust gas purification efficiency* • Poor starting • Unstable idling • Poor acceleration
12	Air flow sensor	Frequency of air flow sensor signal is 10 Hz or less, even though engine is running.	(1) Air flow sensor malfunction (2) Open-circuit or short in air flow sensor circuit, or connector contact is defective (3) Engine control unit malfunction	• Poor acceleration* • Inappropriate idle speed* • Unstable idling*

NOTE
*: Fail-safe/backup function is operating.

TSB Revision

Malfunction code No.	Diagnosis item	Diagnosis contents	Probable cause	Remark (Trouble symptom, etc)
13	Intake air temperature sensor	(1) Voltage of intake air temperature sensor signal is 4.5V or more. (2) Voltage of intake air temperature sensor signal is 0.27V or less.	(1) Intake air temperature sensor malfunction (2) Open-circuit or short in the intake air temperature sensor circuit, or connector contact is defective (3) Engine control unit malfunction	• Slightly poor driveability* • At high temperatures: (a) Poor starting* (b) Unstable idling*
14	Throttle position sensor	(1) Voltage of throttle position sensor signal is 0.2V or less. (2) Voltage of throttle position sensor signal is 2V or more, even though idle position switch is ON.	(1) Throttle position sensor malfunction, or adjustment is defective (2) Open-circuit or short in throttle position sensor circuit, or connector contact is defective	• Slightly poor acceleration <M/T> • Poor driveability <A/T> • Engine stalls
			(3) Idle position switch malfunction when ON (4) Short circuit in idle position switch signal wire (5) Engine control unit malfunction	• Engine stalls • Racing is impossible
21	Engine coolant temperature sensor	(1) Voltage of engine coolant temperature sensor signal is 4.6V or more. (2) Voltage of engine coolant temperature sensor signal is 0.11V or less. (3) While engine is warming up, engine coolant temperature sensor signal shows a drop in engine coolant temperature.	(1) Engine coolant temperature sensor malfunction (2) Open-circuit or short in engine coolant temperature sensor circuit, or connector contact is defective (3) Engine control unit malfunction	When engine is cold: • Poor starting* • Unstable idling* • Poor acceleration*
22	Crank angle sensor	(1) Voltage of crank angle sensor signal does not change (high/low) even though engine has been cranking for 4 seconds or more.	(1) Crank angle sensor malfunction (2) Open-circuit or short in crank angle sensor circuit, or connector contact is defective (3) Engine control unit malfunction	• Engine stalls • Starting is impossible
23	Top dead center sensor	(1) Voltage of top dead center sensor signal does not change (high/low), even though engine is running.	(1) Top dead center sensor malfunction (2) Open-circuit or short in top dead center sensor circuit, or connector contact is defective (3) Engine control unit malfunction	• Unstable idling* • Poor acceleration*
24	Vehicle speed sensor (Reed switch)	Voltage of vehicle speed sensor does not change (high/low), even though vehicle is accelerating at an engine speed of 3000 rpm or more.	(1) Vehicle speed sensor malfunction (2) Open-circuit or short in vehicle speed sensor circuit, or connector contact is defective (3) Engine control unit malfunction	Engine stalls when vehicle stops after decelerating

NOTE
*: Fail-safe/backup function is operating.

Malfunction code No.	Diagnosis item	Diagnosis contents	Probable cause	Remark (Trouble symptom, etc)
25	Barometric pressure sensor	(1) Voltage of barometric pressure sensor signal is 4.5V or more. (2) Voltage of barometric pressure sensor signal is 0.2V or less.	(1) Barometric pressure sensor malfunction (2) Open-circuit or short in barometric pressure sensor circuit, or connector contact is defective (3) Engine control unit malfunction	• Unstable idling* • Poor acceleration* • Poor starting
36	Ignition timing adjustment signal	Ignition timing adjustment signal wire is short-circuited to the ground.	(1) Ignition timing adjustment signal wire is short-circuited to the ground (2) Engine control unit malfunction	• Poor acceleration • Engine overheats
41	Injectors	Injectors do not operate for a continuous 4 second period while engine is cranking or idling.	(1) Injector malfunction (2) Open-circuit or short in injector circuit, or connector contact is defective (3) Engine control unit malfunction	• Unstable idling* • Poor acceleration* • Poor starting

NOTE
*: Fail-safe/backup function is operating.

FAIL-SAFE/BACKUP FUNCTION QUICK REFERENCE TABLE

When the main sensor malfunctions are detected by the self-diagnosis function, the vehicle is controlled by means of the pre-set control logic to maintain safe conditions for driving.

Malfunctioning item	Control contents during malfunction
Air flow sensor	(1) Determines the fuel injection time and ignition timing by means of the throttle position sensor (TPS) signal and the engine speed signal (crank angle sensor signal). (2) Fixes the idle speed control servo in the appointed position so idle speed control is not performed.
Intake air temperature sensor	Controls the intake air temperature at 25°C (77°F).
Throttle position sensor (TPS)	No increase in fuel injection amount during acceleration due to the throttle position sensor signal.
Engine coolant temperature sensor	Controls the engine coolant temperature to 80°C (176°F). (This control will be continued until the ignition switch turns to OFF even though the sensor signal returns to normal.)
Top dead center sensor	Injects fuel simultaneously into all cylinders. (However, when the No. 1 cylinder top dead center is not detected at all after the ignition switch is turned to ON.)
Barometric pressure sensor	Controls the barometric pressure to 760 mmHg (30 in.Hg).
Oxygen sensor	Air/fuel ratio feedback control (closed loop control) is not performed.

READ OUT OF MALFUNCTION CODE

PRECAUTIONS FOR OPERATION

(1) When battery voltage is low; no detection of failure is possible. Be sure to check the battery for voltage and other conditions before starting the test.
(2) Diagnosis item is erased if the battery or the engine control unit connector is disconnected. Do not disconnect the battery before the diagnosis result is completely read.
(3) Connection and disconnection of the multi-use tester (MUT) should always be made with the ignition switch in the OFF position.

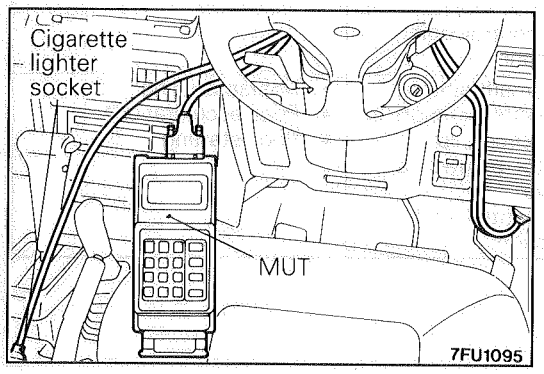

READING STEPS – USING THE MULTI-USE TESTER (MUT)

(1) Read and make a note of the self-diagnosis output.
(2) Refer to the diagnosis chart to remedy the problem.
(3) After turning the ignition switch once to OFF, turn it back to ON.
(4) Erase the problem codes.
(5) Check to be sure that the self-diagnosis code output codes are normal.

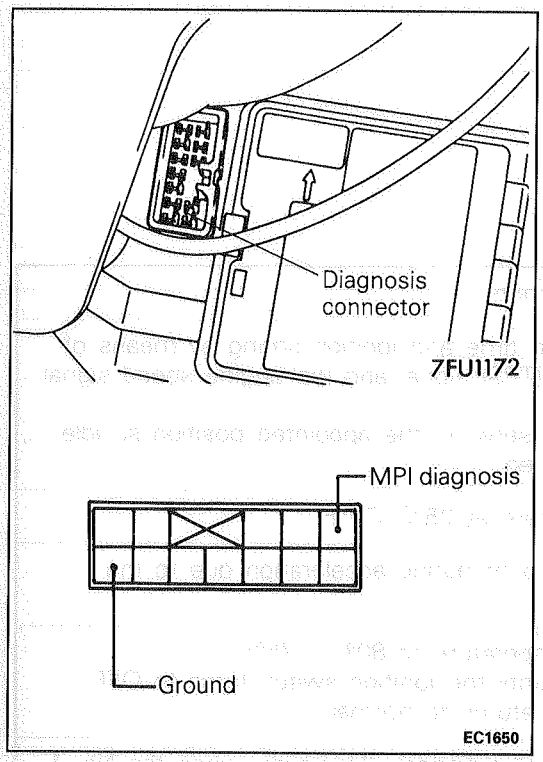

Using Voltmeter

(1) Connect an analog voltmeter between the self-diagnosis output terminal of the diagnosis connector and ground terminal.
(2) Turn on the ignition switch.
(3) Read the diagnosis output pattern from the voltmeter and record it.
(4) Referring to the diagnosis chart, repair the faulty part.
(5) Erase the malfunction code using the following procedure.
  ① Turn OFF the ignition switch.
  ② Disconnect the negative battery cable from the battery terminal for 10 seconds or more and then reconnect it.
  ③ Turn ON the ignition switch and read the self-diagnosis code to check that a normal code is output.

Diagnosis by DIAGNOSIS 2 MODE

(1) Using the multi-use tester (MUT) changeover the diagnosis mode of the engine control unit to DIAGNOSIS 2 MODE.
(2) Road test the vehicle.
(3) Read the diagnosis code in the same manner as "READ OUT OF MALFUNCTION CODE" and repair the malfunctioning part.
(4) Remove the MUT.

NOTE
Removal of the MUT will erase all the self-diagnosis malfunction codes in the engine control unit and changeover the diagnosis mode from DIAGNOSIS 2 MODE to DIAGNOSIS 1 MODE.

CHECK CHART CLASSIFIED BY PROBLEM SYMPTOMS

Problem symptoms / Check Items	Starting		Idling stability			Driving						Stopping	
	Will not start	Starting problem	Idling instability (Rough idling)	Incorrect idling speed	Improper idling continuity	Hesitation, sag	Poor acceleration	Stumble	Shock	Surge	Knocking	Run-on (Dieseling)	Reference page
Power Supply and Ignition Switch–IG	①1												P. 13–35
Engine Control Unit Power Ground	②2												P. 13–38
Fuel Pump	③3	①1			①1	①1	①1						P. 13–39
Air Flow Sensor					⑪10	⑧8		⑤5	⑤5		③1		P. 13–42
Intake Air Temperature Sensor			⑤			④4	④4				①1		P. 13–46
Barometric Pressure Sensor			⑦			⑦7	⑥6				②2		P. 13–48
Engine Coolant Temperature Sensor		3	⑥5	①1	⑤5	⑥6	⑤5	④4		③3			P. 13–50
Throttle Position Sensor						⑤5		③3	④4				P. 13–52
Idle Position Switch			③3	②2	④4								P. 13–54
Top Dead Center Sensor	⑤5	⑥7			⑧7				②2				P. 13–56
Crank Angle Sensor	⑥6	⑦8			⑨8				③3				P. 13–60
Ignition Switch-ST <M/T>	④4	③4											P. 13–62
Ignition Switch-ST and Inhibitor Switch <A/T>	④4	③4		⑤									P. 13–64
Vehicle Speed Sensor					⑥				⑥				P. 13–66
Power Steering Fluid Pressure Switch				③					⑦				P. 13–68
Air Conditioner Switch and Power Relay				④									P. 13–70
Oxygen Sensor			⑨										P. 13–72
Injectors	⑧8	②2	②2		③3	②2	②2	①1		①1		①	P. 13–75
Idle Speed Control Servo (Stepper Motor)		④5	①1	⑥3	②2				⑧6				P. 13–79
Ignition Coil and Power Transistor	⑦7				⑩9		⑦7		①1				P. 13–84
Purge Control Solenoid Valve			⑧										P. 13–88
Anti Lock Braking Signal				③					⑦				P. 13–90
Fuel Pressure		⑤6	④4		⑦6	③3	③3	②2		②2			P. 13–91

○: Warm engine (figures inside the ○ indicate the checking sequence.)
□: Cold engine (figures inside the □ indicate the checking sequence.)

PROBLEM SYMPTOMS TABLE (FOR YOUR INFORMATION)

Item		Symptom
Starting	Won't start (no initial combustion)	The starter is used to crank the engine, but there is no combustion within the cylinders, and the engine won't start.
	Starting problem (initial combustion, then stall)	There is combustion within the cylinders, but then the engine soon stalls.
	(Starting takes a long time.)	Engine won't start quickly.
Idling stability	Idling instability (Rough idling)	Engine speed doesn't remain constant; changes during idling. Usually, a judgement can be based upon the movement of the tachometer pointer, and the vibration transmitted to the steering wheel, shift lever, body, etc. This is called rough idling.
	Incorrect idling speed	The engine doesn't idle at the usual correct speed.
	Improper idling continuity Die out Pass out	This non-continuity of idling includes the following elements. (1) Die out ..... The engine stalls when the foot is taken from the accelerator pedal, regardless of whether the vehicle is moving or not. (2) Pass out ..... The engine stalls when the accelerator pedal is depressed or while it is being used.
Driving	Hesitation Sag	"Hesitation" is the delay in response of the vehicle speed (engine r/min) that occurs when the accelerator is depressed in order to accelerate from the speed at which the vehicle is now traveling, or a temporary drop in vehicle speed (engine r/min) during such acceleration. Serious hesitation is called "sag". 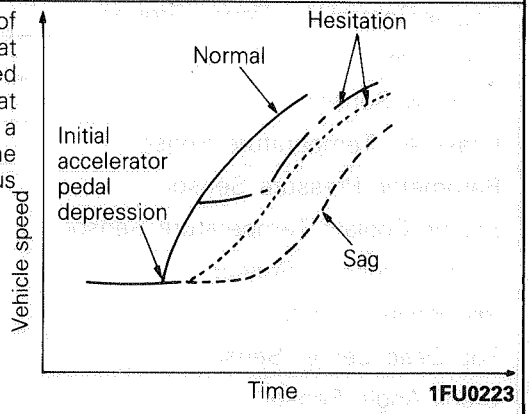
	Poor acceleration	Poor accleration is inability to obtain an acceleration corresponding to the degree of throttle opening, even though acceleration is smooth, or the inability to reach maximum speed.
	Stumble	Engine r/min response is delayed when the accelerator pedal is initially depressed for acceleration from the stopped condition. 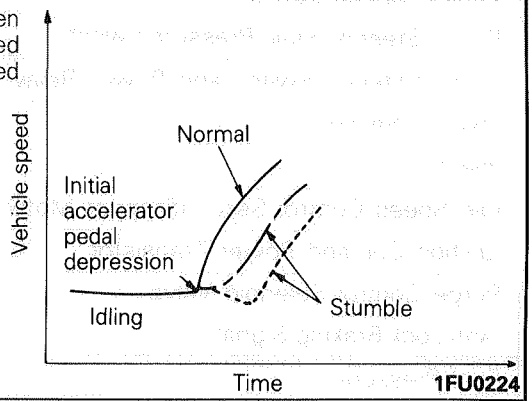
	Shock	The feeling of a comparatively large impact or vibration when the engine is accelerated or decelerated.
	Surge	This is repeated surging ahead during constant speed travel or during variable speed travel.
	Knocking	A sharp sound like a hammer striking the cylinder walls during driving and which adversely affects driving.
Stopping	Run-on (Dieseling)	The engine continues to run even after the switch is turned OFF. This is called dieseling.

TSB Revision

CIRCUIT DIAGRAM
<M/T>

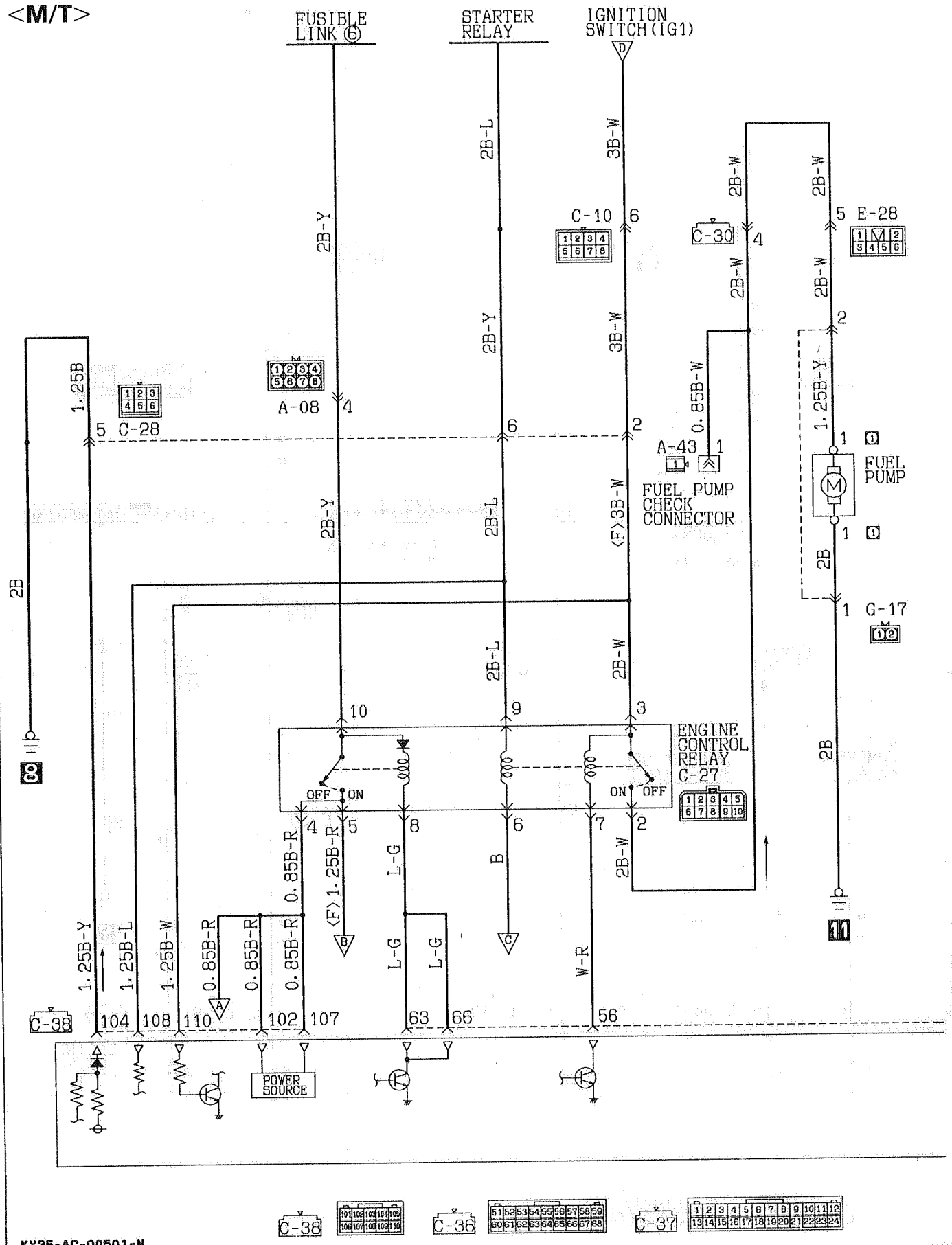

KX35-AC-00501-N

TSB Revision

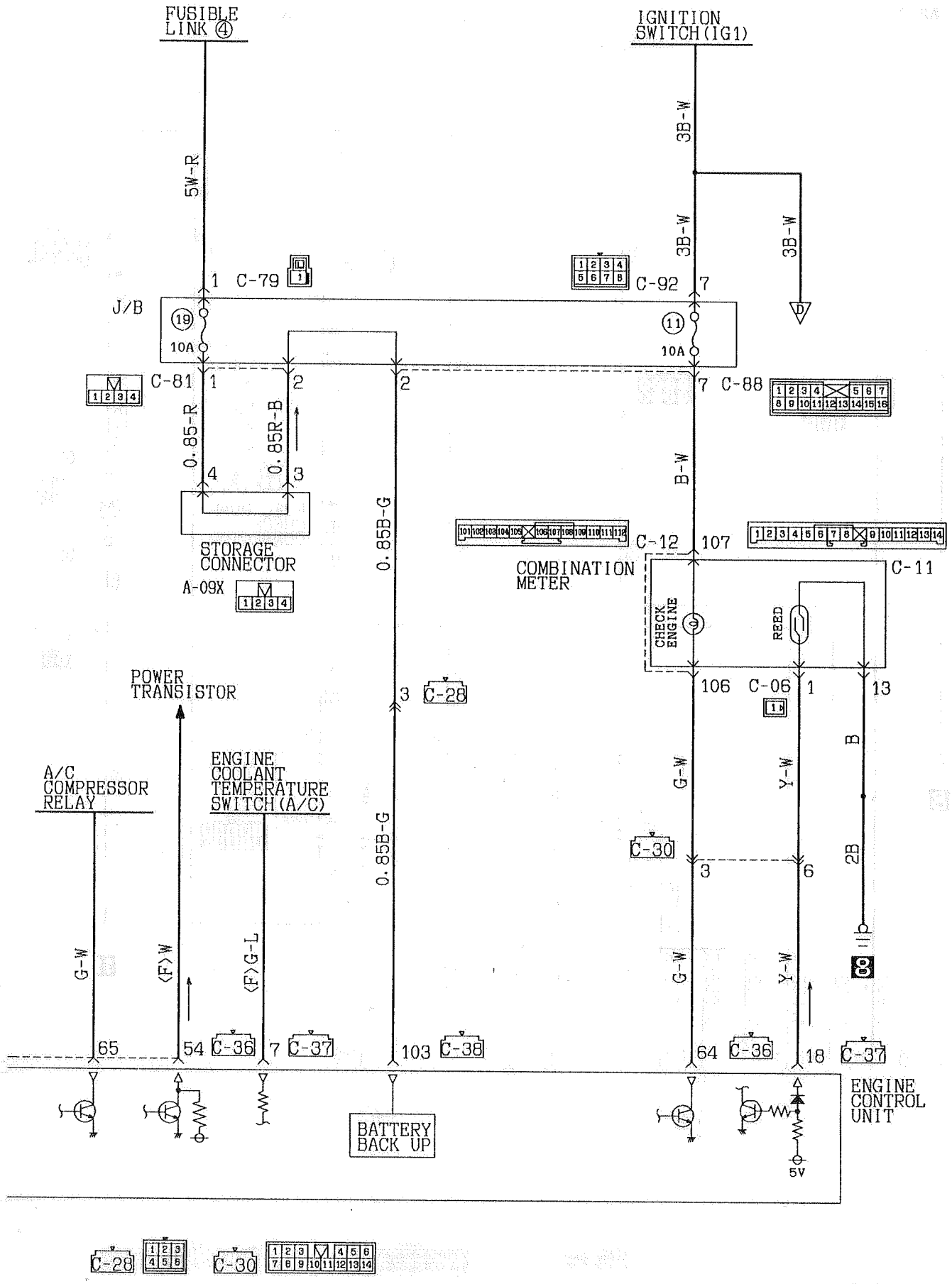
FUSIBLE LINK ④
IGNITION SWITCH(IG1)
5W-R
3B-W
3B-W
3B-W
1 C-79
C-92 7
J/B
19
10A
11
10A
C-81 1 2
2
7 C-88
0.85-R
0.85R-B
4
3
B-W
STORAGE CONNECTOR
A-09X
0.85B-G
C-12 107
C-11
COMBINATION METER
CHECK ENGINE
REED
POWER TRANSISTOR
3 C-28
106 C-06 1
13
A/C COMPRESSOR RELAY
ENGINE COOLANT TEMPERATURE SWITCH(A/C)
G-W
Y-W
B
C-30
3
6
2B
G-W
(F)W
(F)G-L
0.85B-G
G-W
Y-W
65
54
C-36
7
C-37
103
C-38
64
C-36
18
C-37
BATTERY BACK UP
ENGINE CONTROL UNIT
5V
C-28
C-30

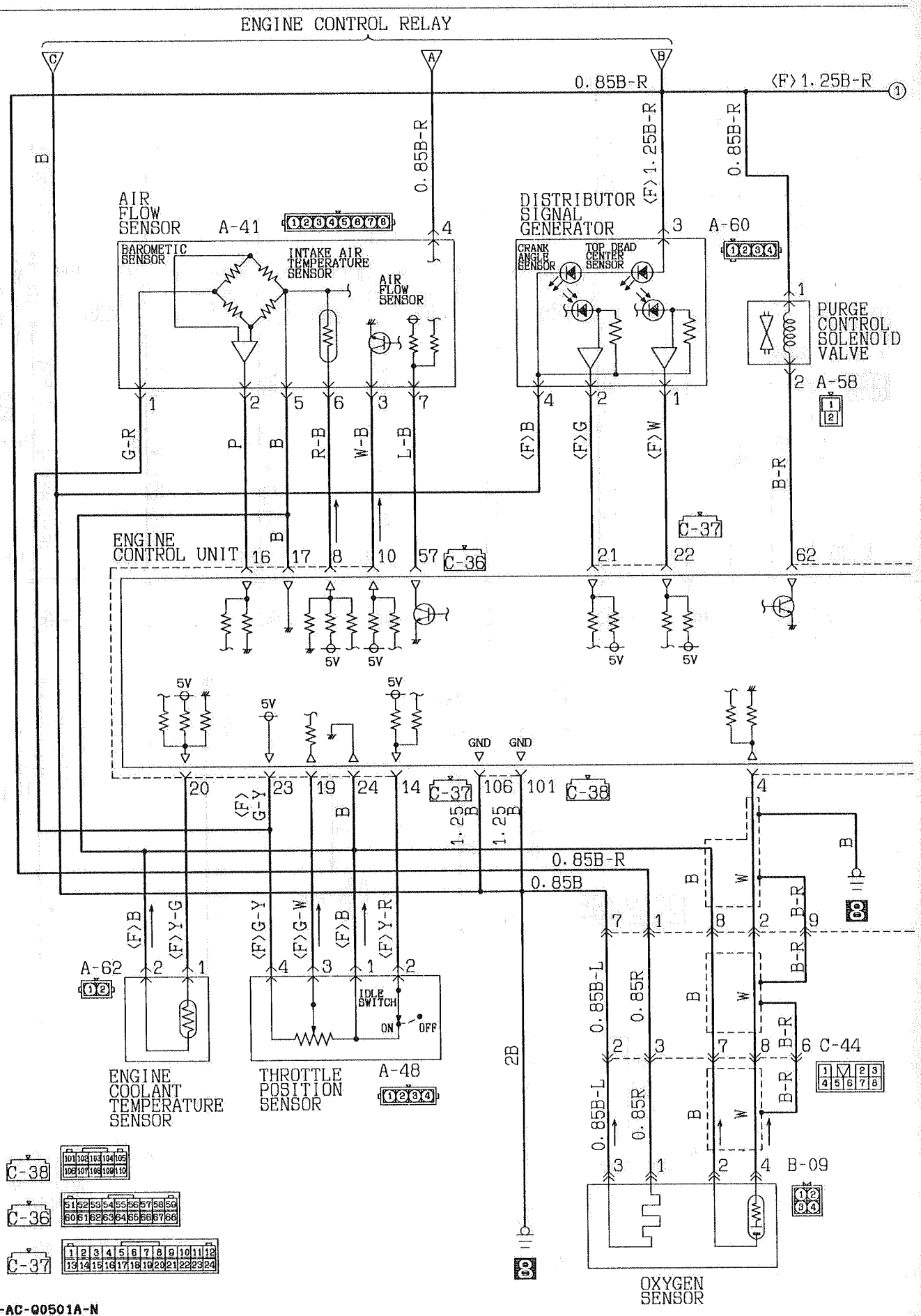

KX35-AC-Q0501A-N

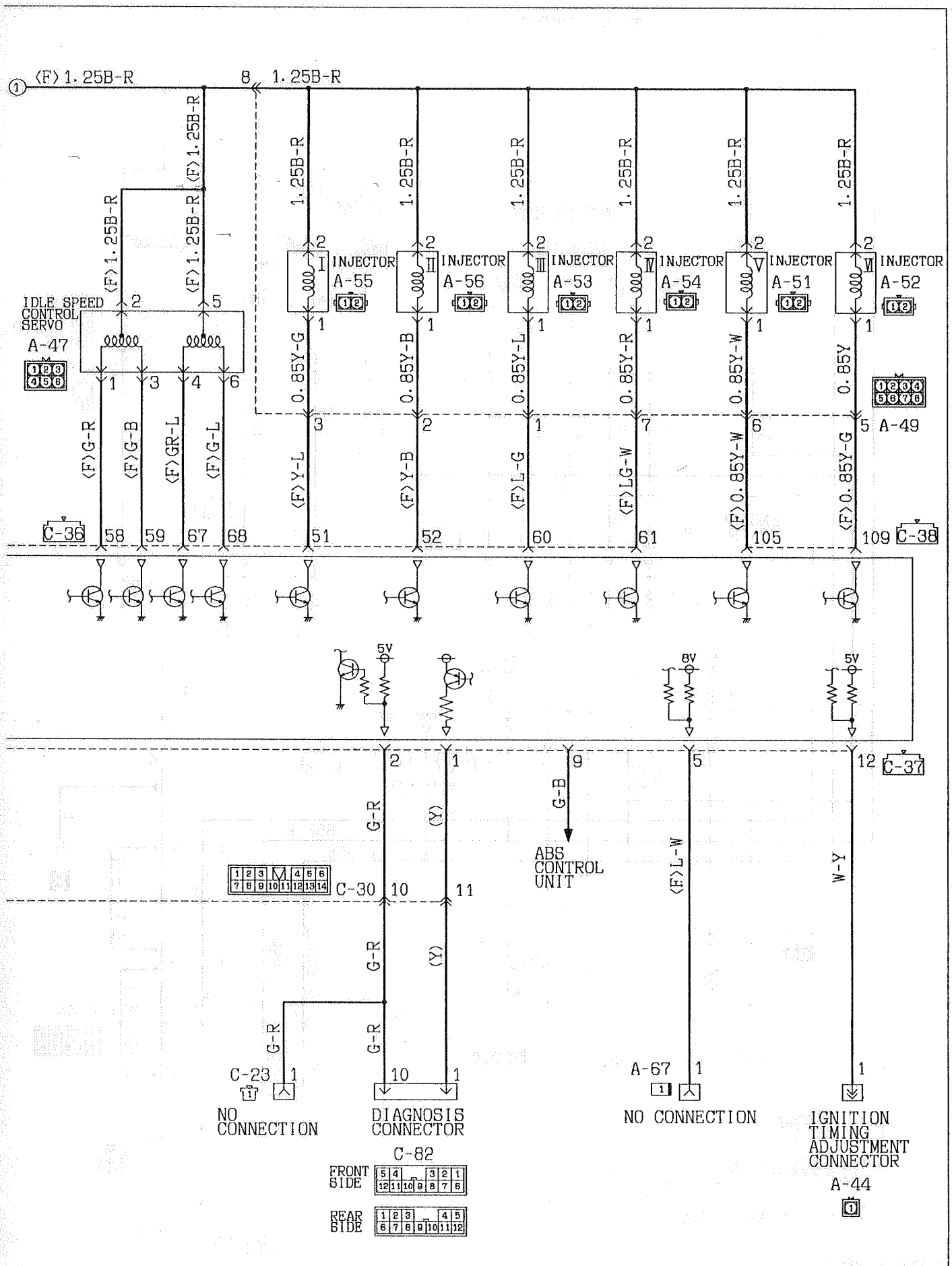
⟨F⟩1.25B-R
1.25B-R
INJECTOR A-55
INJECTOR A-56
INJECTOR A-53
INJECTOR A-54
INJECTOR A-51
INJECTOR A-52
IDLE SPEED CONTROL SERVO A-47
0.85Y-G
0.85Y-B
0.85Y-L
0.85Y-R
0.85Y-W
0.85Y
⟨F⟩G-R
⟨F⟩G-B
⟨F⟩GR-L
⟨F⟩G-L
⟨F⟩Y-L
⟨F⟩Y-B
⟨F⟩L-G
⟨F⟩LG-W
⟨F⟩0.85Y-W
⟨F⟩0.85Y-G
A-49
C-36
C-38
5V
8V
C-37
G-R
(Y)
G-B
⟨F⟩L-W
W-Y
C-30
ABS CONTROL UNIT
C-23
NO CONNECTION
DIAGNOSIS CONNECTOR
C-82
FRONT SIDE
REAR SIDE
A-67
NO CONNECTION
IGNITION TIMING ADJUSTMENT CONNECTOR
A-44

<A/T>

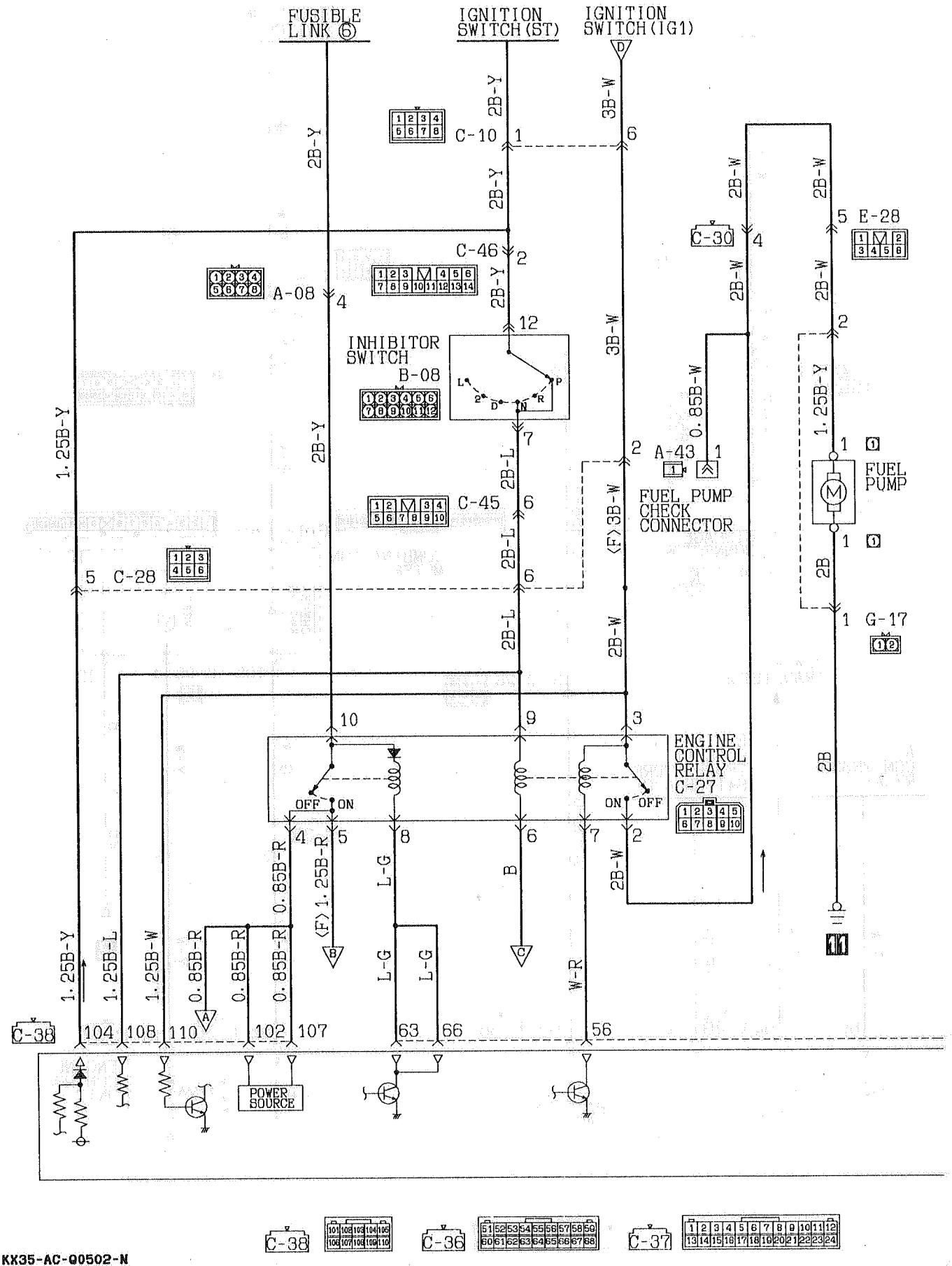

KK35-AC-Q0502-N

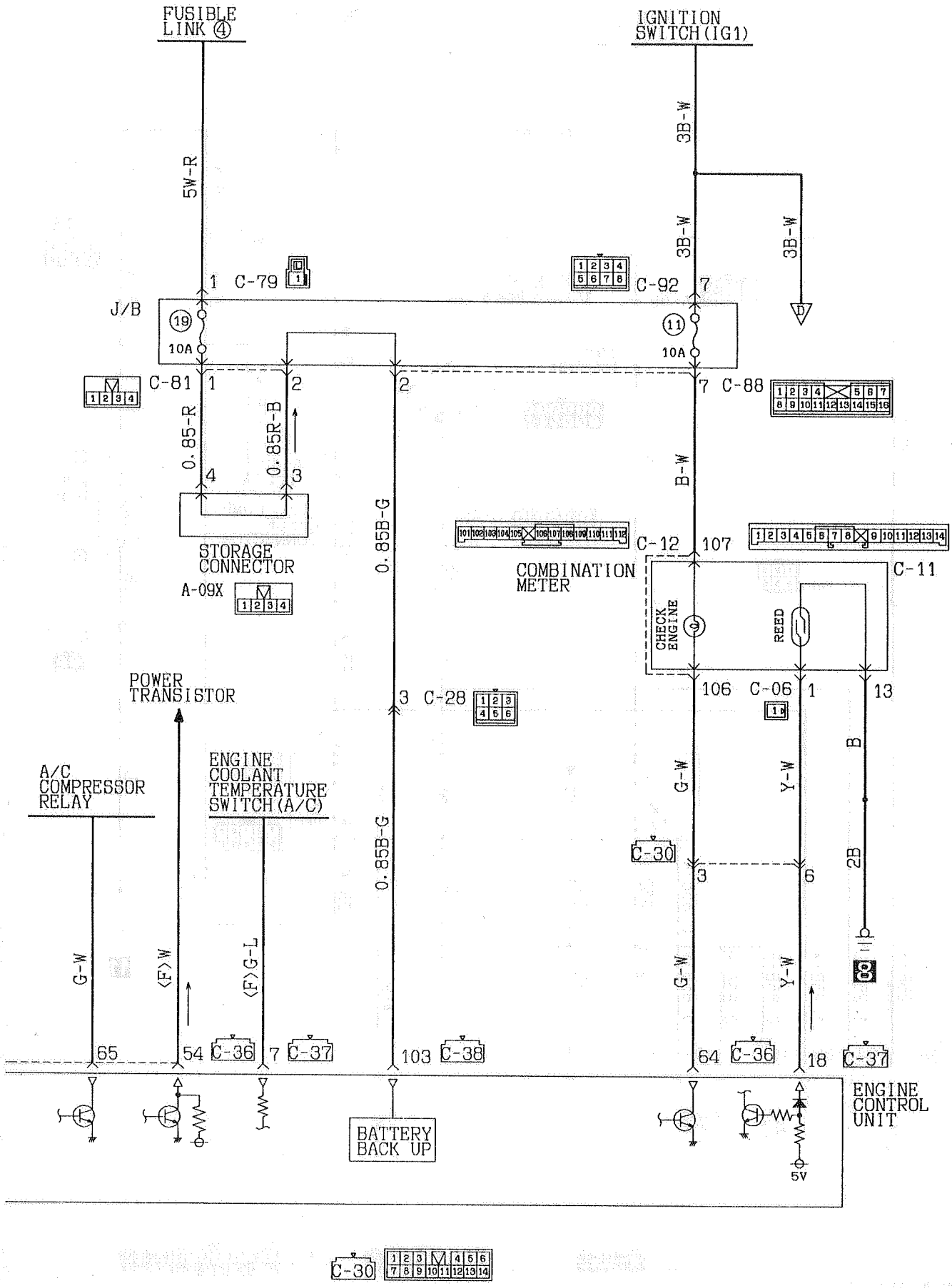
FUSIBLE LINK ④
IGNITION SWITCH(IG1)
5W-R
3B-W
3B-W
3B-W
1 C-79
C-92 7
J/B
19
10A
11
10A
C-81 1 2
2
7 C-88
0.85-R
0.85R-B
4
3
B-W
STORAGE CONNECTOR
A-09X
0.85B-G
C-12 107
COMBINATION METER
C-11
CHECK ENGINE
REED
POWER TRANSISTOR
3 C-28
106 C-06 1
13
B
A/C COMPRESSOR RELAY
ENGINE COOLANT TEMPERATURE SWITCH(A/C)
G-W
Y-W
C-30
3
6
2B
0.85B-G
G-W
(F)W
(F)G-L
Y-W
65
54 C-36 7 C-37
103 C-38
64 C-36
18 C-37
BATTERY BACK UP
ENGINE CONTROL UNIT
5V
C-30

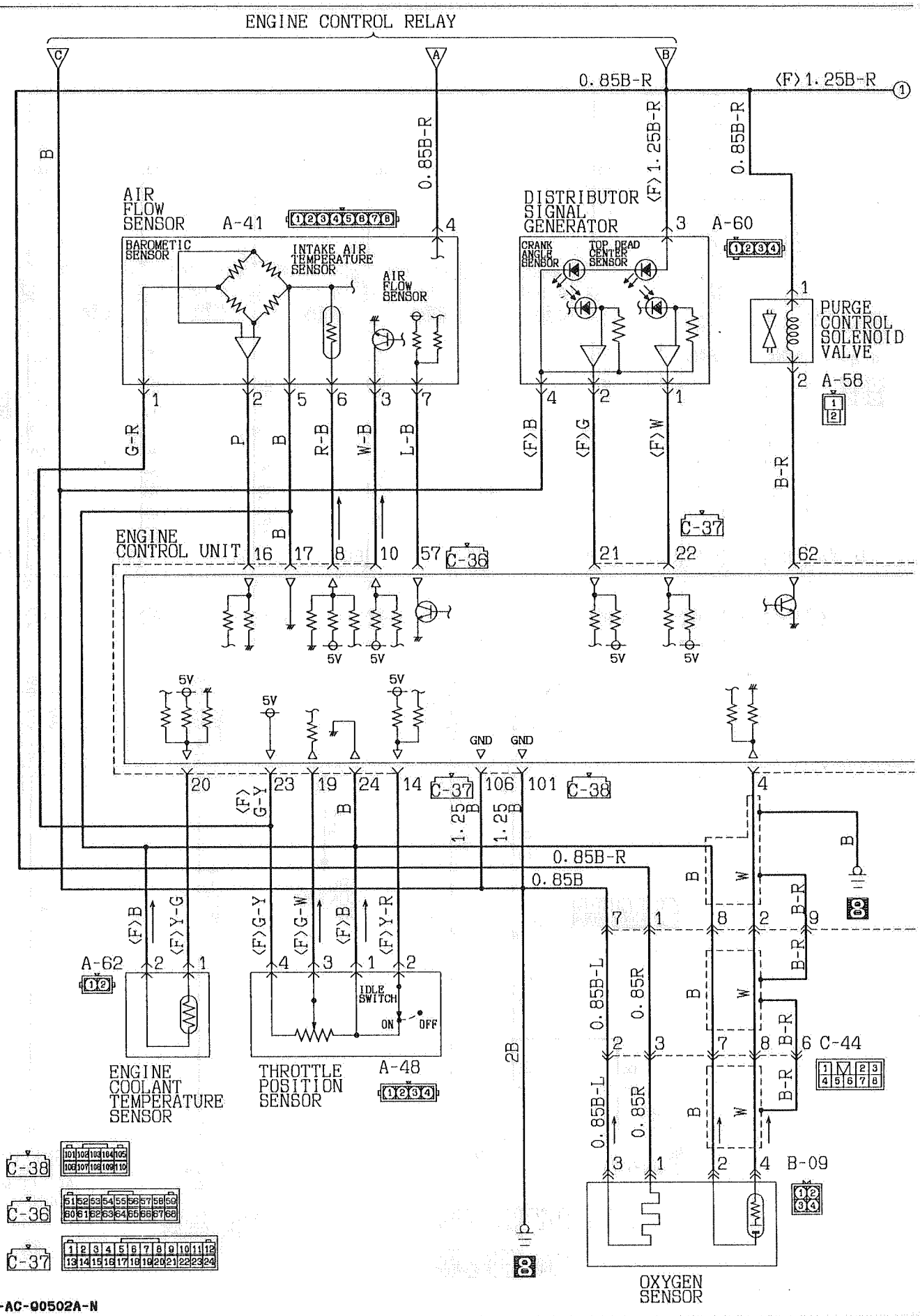

KX35-AC-00502A-N

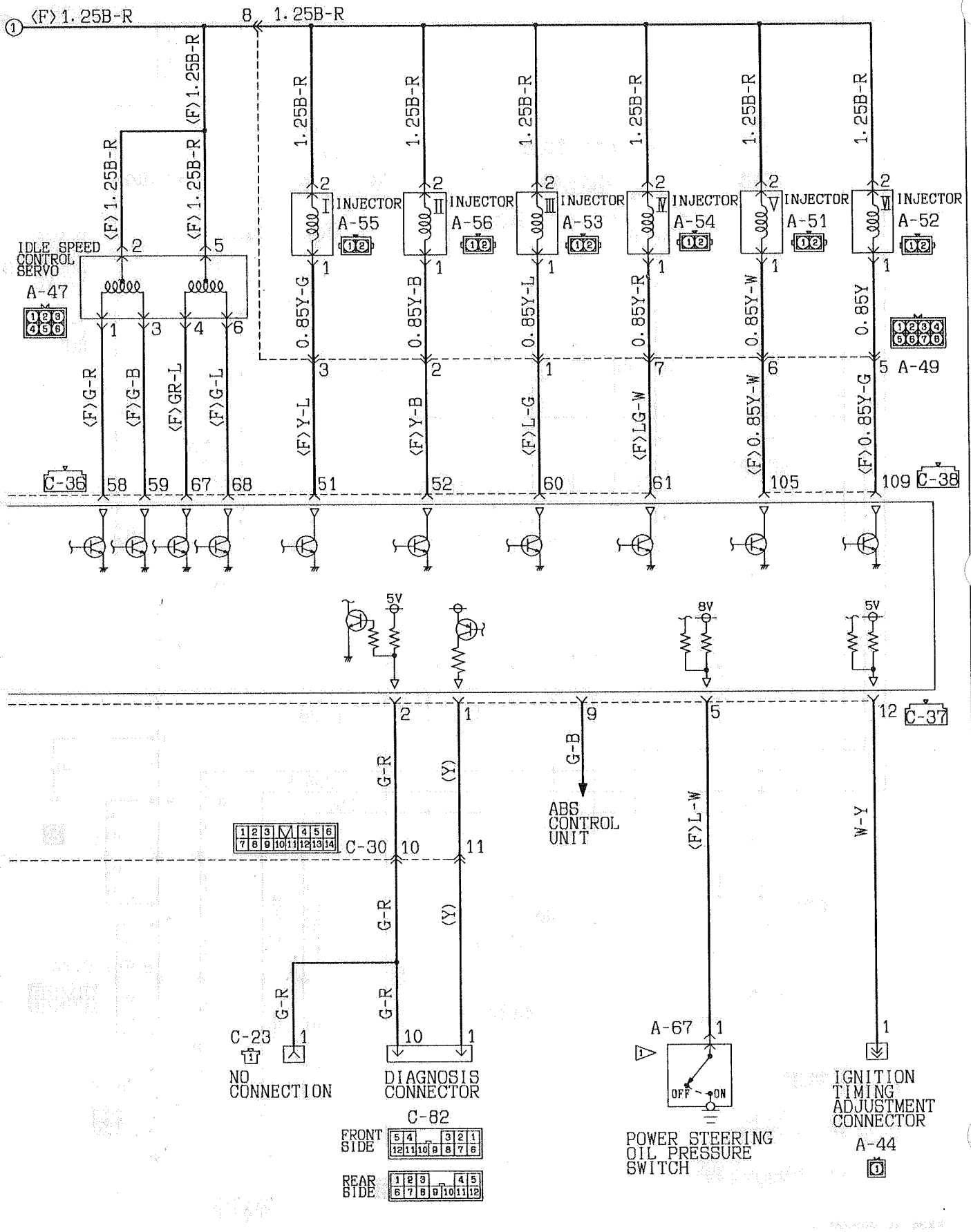

TSB Revision

FUEL TANK AND FUEL LINE

M13EAAAb

Symptom	Probable cause	Remedy
Engine malfunctions due to insufficient fuel supply	Bent or kinked fuel pipe or hose	Repair or replace
	Clogged fuel pipe or hose	Clean or replace
	Dirty or rusted fuel tank interior	
	Clogged fuel filter or in-tank fuel filter	Replace
	Malfunctioning fuel pump (Clogged filter in the pump)	
	Water in fuel filter	Replace the fuel filter or clean the fuel tank and fuel line
Evaporative emission control system malfunctions (When tank cap is removed, pressure releasing noise is heard)	Mispiping of vapor line	Correct
	Disconnect vapor line piping joint	
	Folded, bent, cracked or clogged vapor line	Replace
	Faulty fuel tank cap	
	Malfunctioning overfill limiter (two-way valve)	

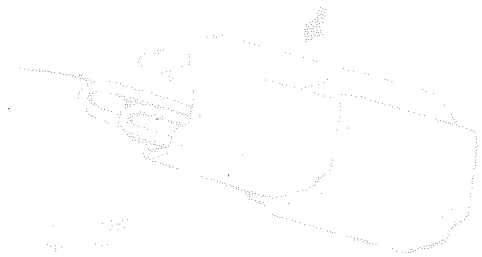

SERVICE ADJUSTMENT PROCEDURES
M13FHBW

BASIC IDLE SPEED ADJUSTMENT

NOTE
1. The basic idle speed has been factory-adjusted with the speed adjusting screw (SAS) and does not normally require adjustment.
2. If the adjustment is required, first check that the ignition plug, injector, ISC servo, and compression pressure are normal.

(1) Before starting the inspection and adjustment procedures, set the vehicle in the following conditions:
- Engine coolant temperature: 80 to 95°C (176 to 203°F)
- Lights and accessories: OFF
- Transmission: Neutral (P for vehicles on automatic transmission)
- Steering wheel: Straightforward position

(2) When using the multi-use tester (MUT) connect it to the diagnosis connector.

NOTE
Connection of the MUT grounds the diagnosis control terminal.

(3) When not using the MUT proceed as follows:

① Insert a paper clip into the 1-pin connector as shown in the illustration.

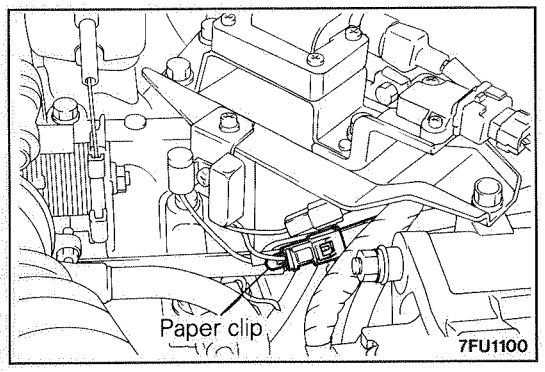

② Insert a paper clip from the harness side into the 1 pin connector as shown in the illustration at left. The connector should not be disconnected.

Caution
Insert the paper clip as in the illustration at left along the terminal from the opposite side of the locking pawl on the female connector.

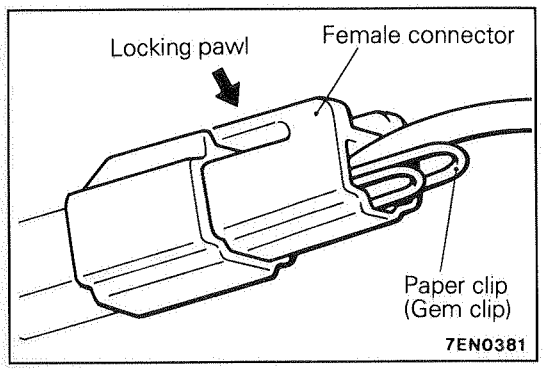

③ Connect a primary-voltage-detecting tachometer to the paper clip.

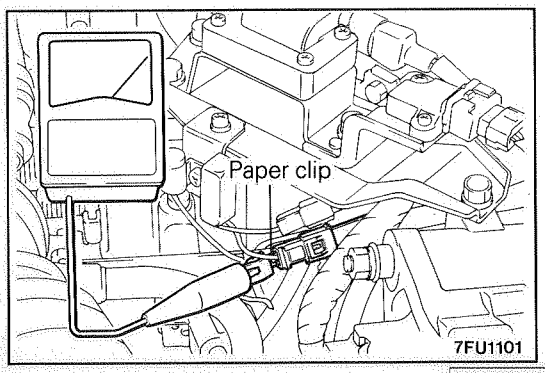

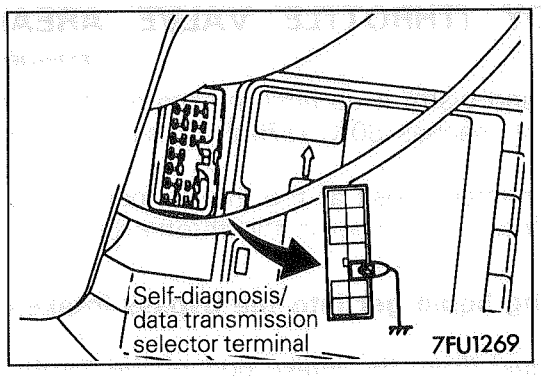

③ Using a jumper wire, ground the diagnosis control terminal (terminal ⑩) of the diagnosis connector.

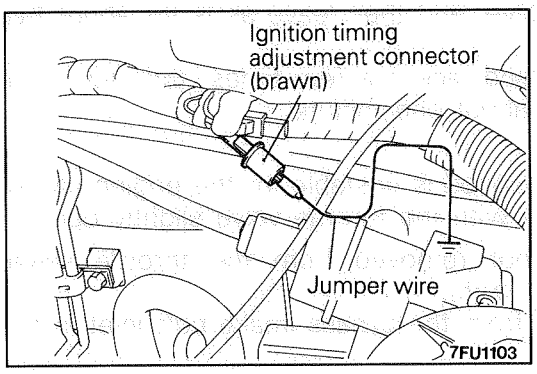

(4) Remove the waterproof female connector from the ignition timing adjusting connector (brown).
(5) Using a jumper wire, ground the ignition timing adjusting terminal.

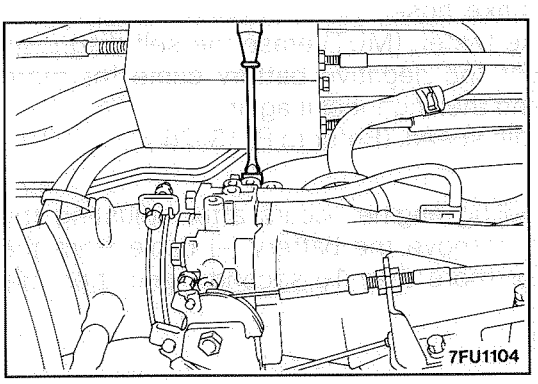

(6) Start the engine and run at idle.
(7) Check the basic idle speed.
When using the multi-use tester (MUT), select item No. 38 and read the idle speed.

Basic idle speed: 700 ± 50 rpm

NOTE
1. The engine speed may be low by 20 to 100 rpm while the vehicle is new [distance driven approx. 500 km (300 miles) or less], but no adjustment is necessary.
2. If the engine stalls or speed is low despite a sufficient distance driven [approx. 500 km (300 miles) or more], it is probably due to deposits on the throttle valve. In this case, clean the throttle valve. (Refer to P.13-28.)

(8) If the basic idle speed is out of specification, adjust by turning the speed adjusting screw (SAS).

NOTE
If the idle speed is higher than the standard value even with SAS fully tightened, check to see if there is evidence of the fixed SAS being moved. If the idle switch seems to have been moved, adjust it. If it does not seem to have been moved, there may be a leak caused by deteriorated fast idle air valve (FIAV). In such a case, replace the throttle body.

(9) Turn the ignition switch OFF.
(10) When the MUT has not been used, remove the jumper wire from the diagnosis control terminal.
(11) Remove the jumper wire from the ignition timing adjusting terminal and replace the connector back again.
(12) Start the engine again and run at idle for 10 minutes to make sure that the engine runs at proper idle speed.

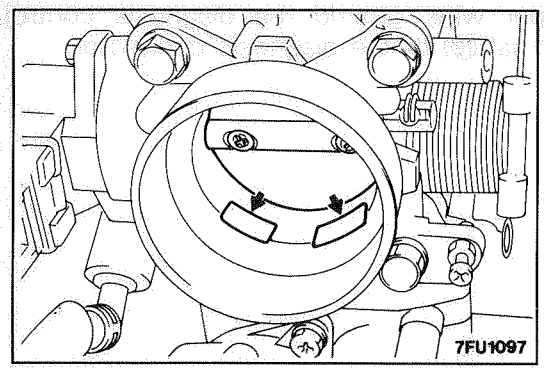

THROTTLE BODY (THROTTLE VALVE AREA) CLEANING

E13HAJB1

(1) Start the engine and warm it up until the temperature of the engine coolant reaches 80°C (176°F) or higher; then stop the engine.
(2) Disconnect the air intake hose at the throttle body side.
(3) Plug the bypass intake port inlet in the throttle body.

Caution
Never let cleaning liquid get into the bypass intake.

(4) Spray cleaning liquid (from the intake port of the throttle body) onto the valve, and then leave as is for about five minutes.
(5) Start the engine and race it a few times; then let it run at idle speed for about one minute.

NOTE
The engine idling speed is unstable (or the engine stalls), let the engine run with the throttle valve slightly open.

(6) If deposits are not removed from the throttle valve, repeat steps (4) and (5).
(7) Remove the plug from the bypass intake port inlet in the throttle body.
(8) Connect the air intake hose.
(9) Using the multi-use tester, (MUT) erase the self-diagnosis code or disconnect the negative battery cable for more than 10 seconds and then connect it again.
(10) Adjust the basic idle speed. (Refer to P. 13–26.)

NOTE
If hunting of the idling engine occurs after adjusting the basic idling speed, remove the battery (–) cable from the battery terminal for more than 10 seconds, and then idle the engine again.

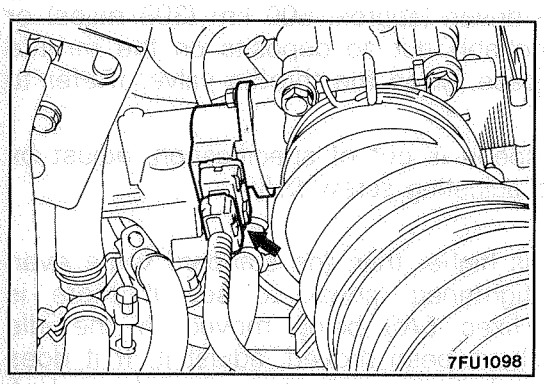

IDLE POSITION SWITCH AND THROTTLE POSITION SENSOR ADJUSTMENT

E13HAKD1

(1) Disconnect the connector of the throttle-position sensor.

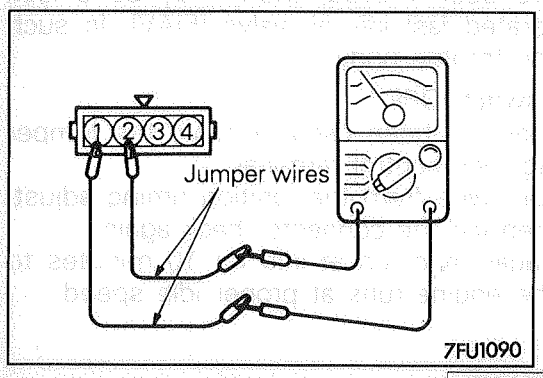

(2) Using jumper wires, connect an ohmmeter across terminal ② (idle position switch) and terminal ④ (sensor ground) of the throttle position sensor.

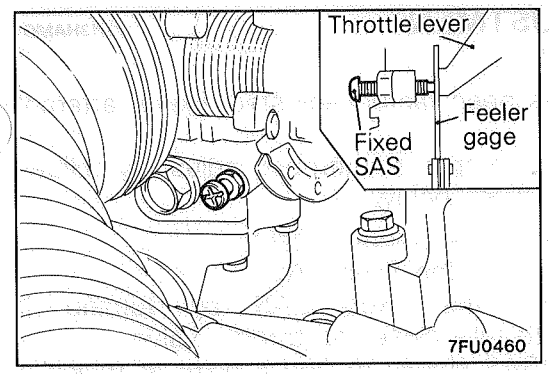

(3) Insert a 0.65 mm (.0256 in.) thick feeler gage between the fixed SAS and throttle lever.

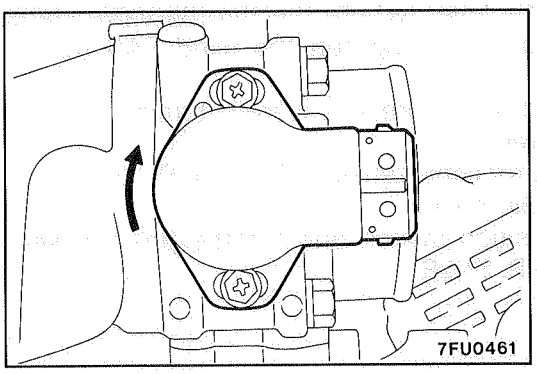

(4) Loosen the throttle position sensor mounting bolts and turn the throttle position sensor body fully clockwise.
(5) In this condition, check that there is continuity across terminals ① and ②.

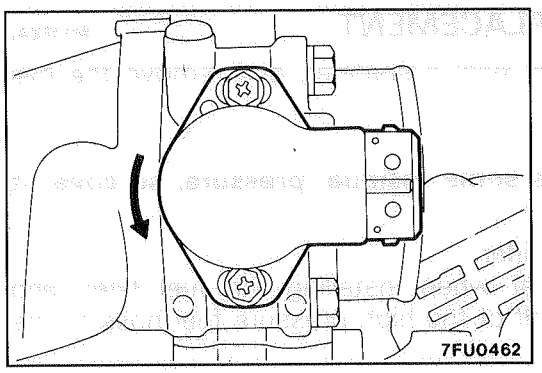

(6) Slowly turn the throttle position sensor counterclockwise until you find a point at which there is no continuity across terminals ① and ②. Then, tighten the throttle position sensor mounting bolt securely.
(7) Connect the throttle position sensor connector.

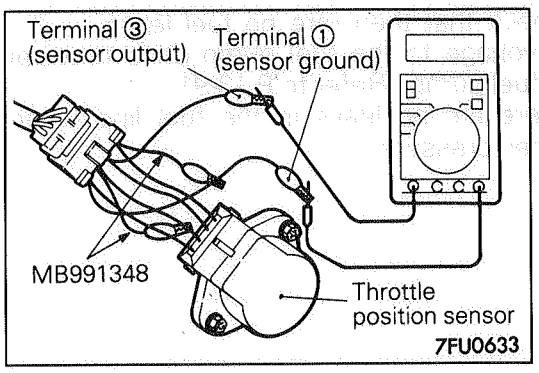

(8) When using the multi-use tester (MUT), connect it to the diagnosis connector.
(9) When not using the MUT, proceed as follows:
① Disconnect the throttle position sensor connectors and connect the special tool. Test Harness Set, between the disconnected connectors:
② Connect a digital voltmeter between the throttle position sensor terminal ③ (sensor output) and terminal ① (sensor ground).
(10) Turn the ignition switch ON (but do not start the engine).
(11) Check the throttle position sensor output voltage.
When using the MUT, select item No. 14 and read the throttle position sensor output voltage.

Standard value: 400 – 1,000 mV

(12) If the voltage is out of specification, check the throttle position sensor and associated harnesses.
(13) Remove the feeler gage.
(14) Turn the ignition switch OFF.

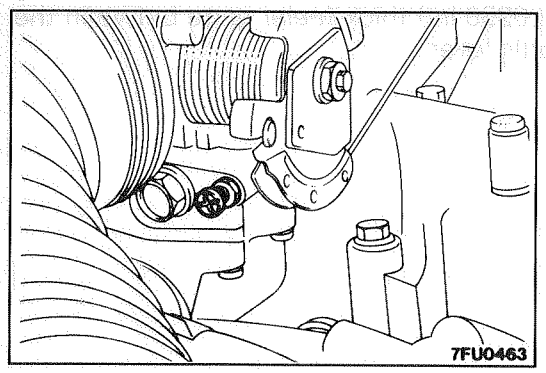

FIXED SAS ADJUSTMENT

E13HAMC1

NOTE
1. The fixed SAS has been factory-adjusted. Never attempt to move it.
2. Should it be out of proper adjustment, adjust by following the procedure given below.

(1) Sufficiently slacken the accelerator cable.
(2) Loosen the lock nut on the fixed SAS.
(3) Sufficiently loosen the fixed SAS by turning it counterclockwise to fully close the throttle valve.
(4) Tighten the fixed SAS slowly to find a point at which it contacts the throttle lever (where the throttle valve starts opening). From that point, tighten the fixed SAS further $1\frac{1}{4}$ turns.
(5) Holding the fixed SAS to prevent it from turning, tighten the lock nut securely.
(6) Adjust the accelerator cable tension. (Refer to P. 13-103.)
(7) Adjust the basic idle speed.
(8) Adjust the idle position switch and throttle position sensor (TPS). (Refer to P. 13-28.)

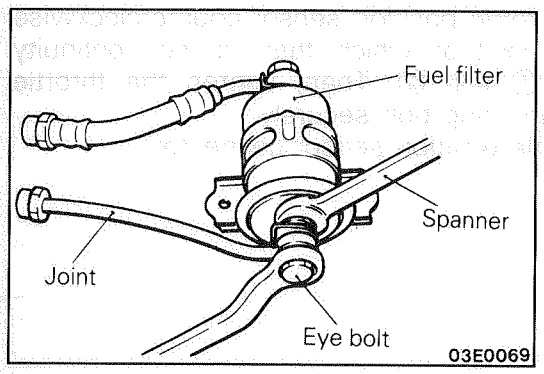

FUEL FILTER REPLACEMENT

M13FZAL

(1) Hold the fuel filter with a spanner, and remove the eye bolt.

Caution
The fuel line has some residual pressure, so cover it with a rag.

(2) Remove the fuel filter.
(3) Use a new gasket when installing the fuel filter, and tighten the eye bolt of the high pressure fuel hose to the specified torque.

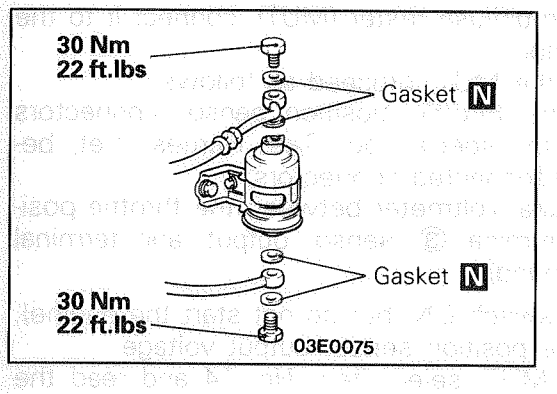

(4) After installing, check that there are no fuel leaks.
① Apply battery voltage to the fuel pump drive terminal to operate the fuel pump. (Refer to P.13-91)
② Check that there are no leaks in the fuel line when the fuel is under pressure.

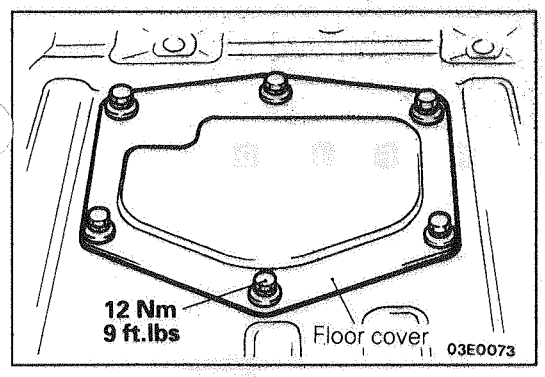

FUEL GAGE UNIT REPLACEMENT M13FFAN

(1) Take out the carpet in the cargo compartment and remove the floor cover.

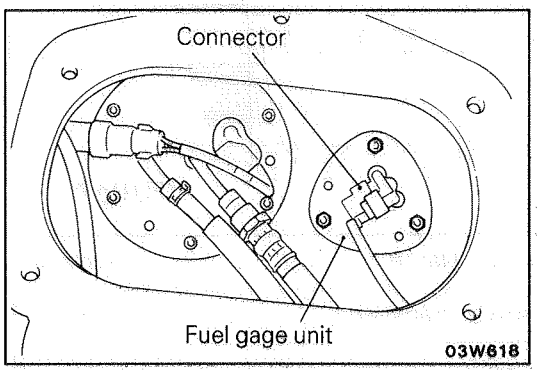

(2) Disconnect the connector from the fuel gage unit, and remove the fuel gage unit.
(3) Install the fuel gage unit so that the packing stoppers (2 places) match the hole in the fuel gage unit.
(4) Install the floor cover packing and the floor cover.

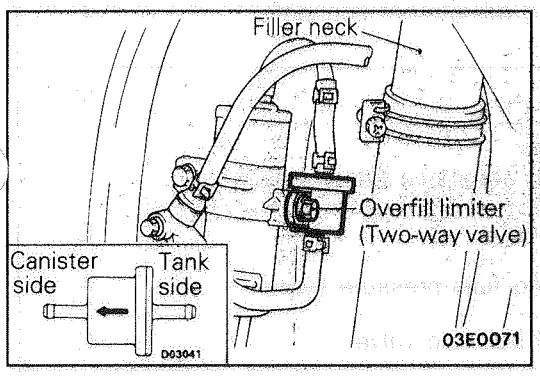

OVERFILL LIMITER (TWO-WAY VALVE) REPLACEMENT M13FEAJ

(1) Remove the filler neck protector inside the left rear fender.
(2) Replace the overfill limiter (two-way valve).

Caution
Be careful not to mistake the direction of the overfill limiter (two-way valve).

(3) Install the filler neck protector.

ON-VEHICLE INSPECTION OF MPI COMPONENTS M13QAAC

COMPONENT LOCATION

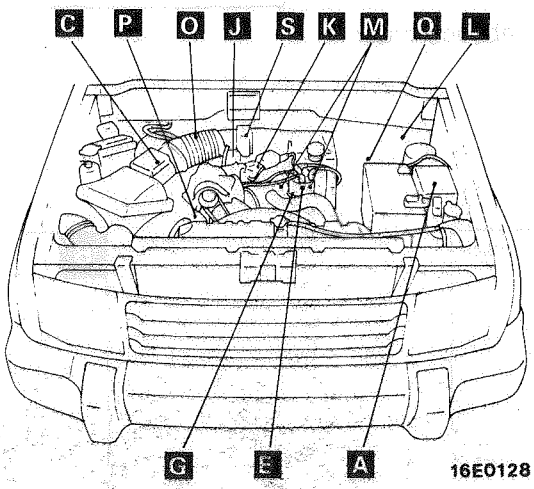

TSB Revision

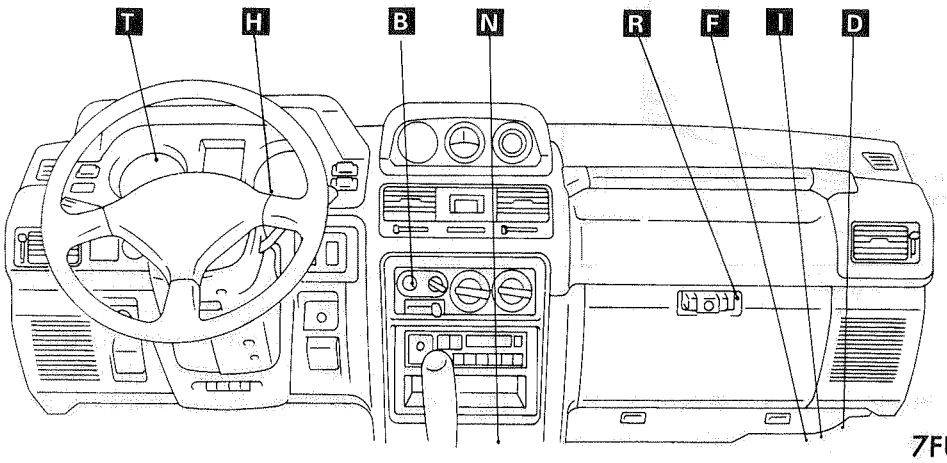

7FU1167

Name	Symbol	Name	Symbol
Air conditioner compressor relay	A	Ignition coil (power transistor)	K
Air conditioner switch	B	Ignition timing adjustment connector	L
Air flow sensor (With intake air temperature sensor and barometric pressure sensor)	C	Injector	M
Engine control relay	D	Inhibitor switch (Vehicles with automatic transmission)	N
Crank angle sensor	E	Oxygen sensor	O
Engine control unit	F	Power steering fluid pressure switch	P
Engine coolant temperature sensor	G	Purge control solenoid valve	Q
Check engine warning light	H	Self-diagnosis connector	R
Fuel pump check connector	I	Throttle position sensor (with idle position sensor)	S
Idle speed control servo	J	Vehicle speed sensor (reed switch)	T

NOTE
The "Name" column is arranged in alphabetical order.

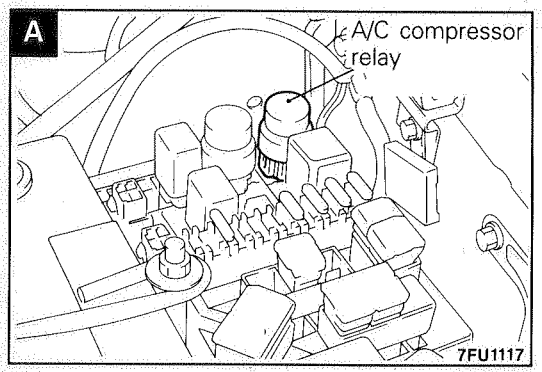

7FU1117

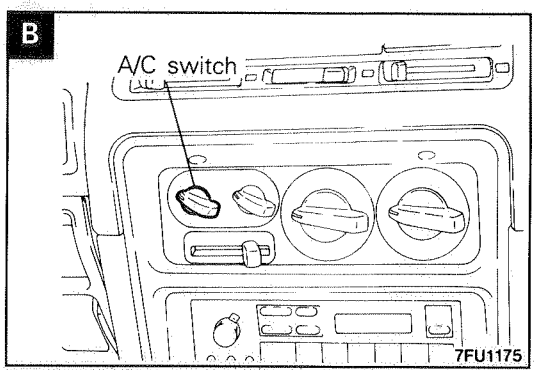

7FU1175

TSB Revision

C

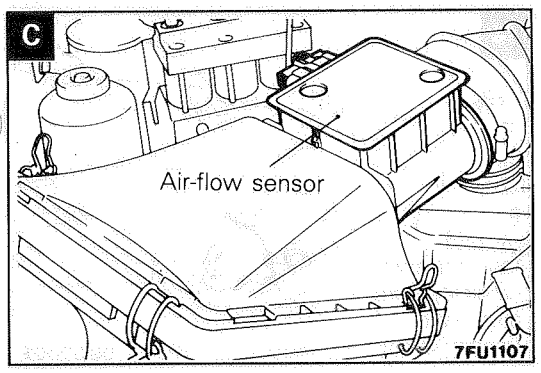
Air-flow sensor
7FU1107

D

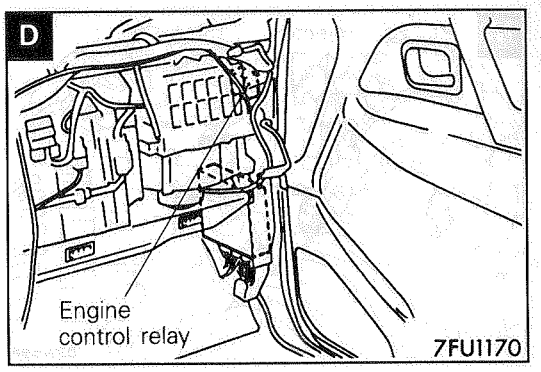
Engine
control relay
7FU1170

E

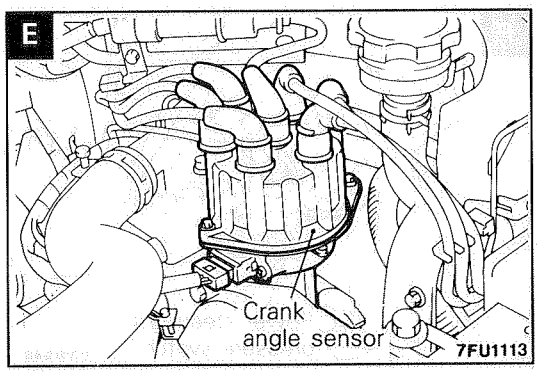
Crank
angle sensor
7FU1113

F

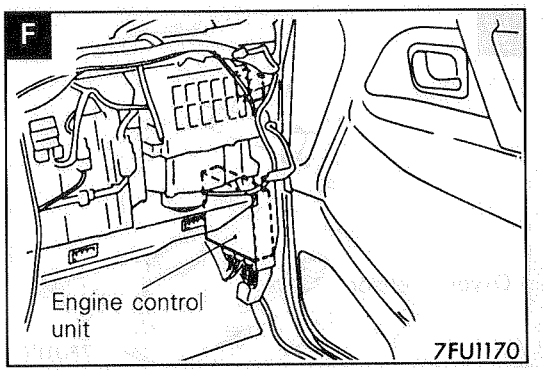
Engine control
unit
7FU1170

G

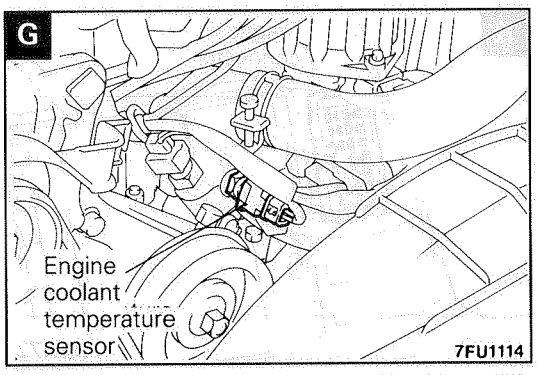
Engine
coolant
temperature
sensor
7FU1114

H

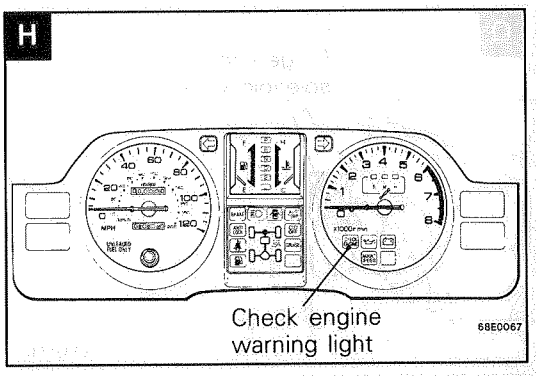
Check engine
warning light
68E0067

I

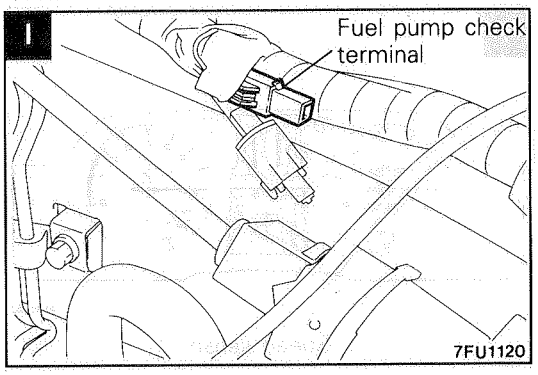
Fuel pump check
terminal
7FU1120

J

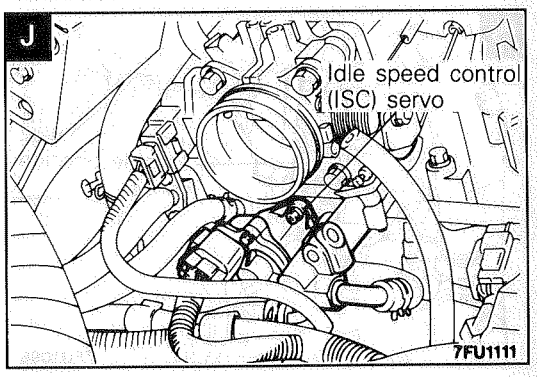
Idle speed control
(ISC) servo
7FU1111

K

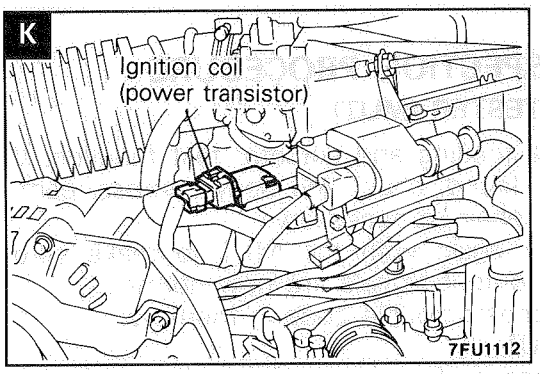
Ignition coil
(power transistor)
7FU1112

L

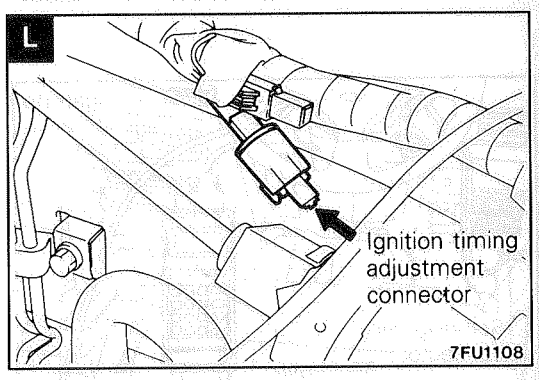
Ignition timing
adjustment
connector
7FU1108

M

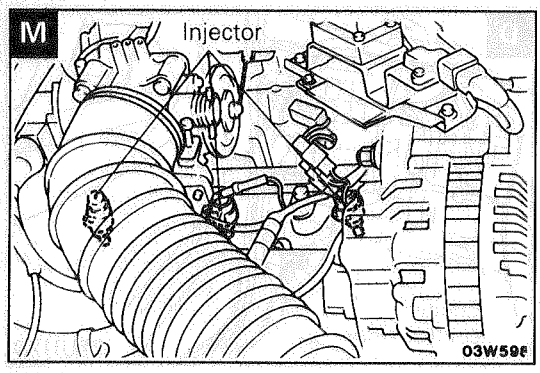

N

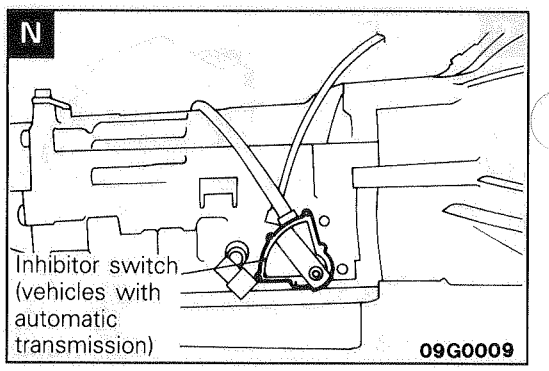

O

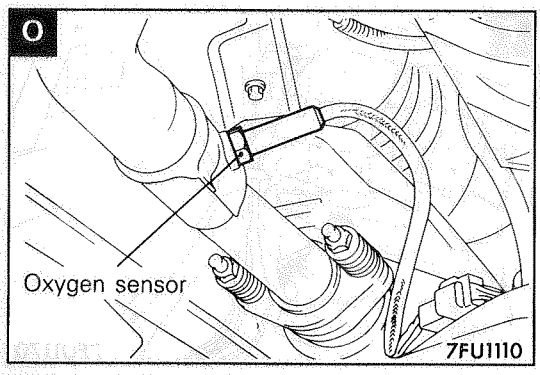

P

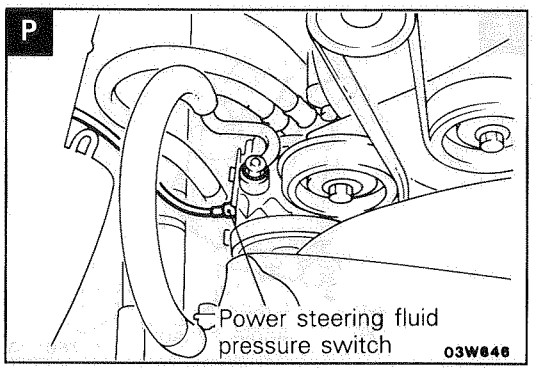

Q

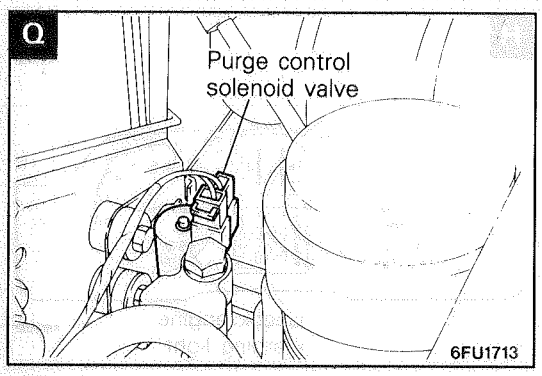

R

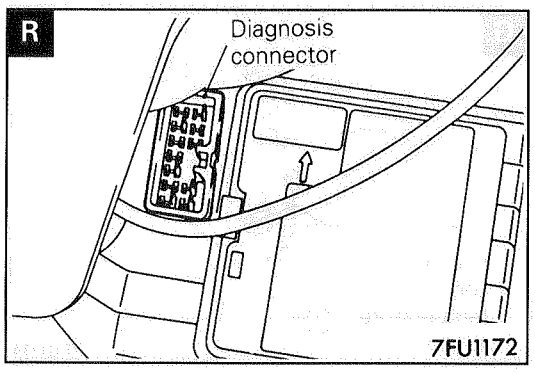

IS

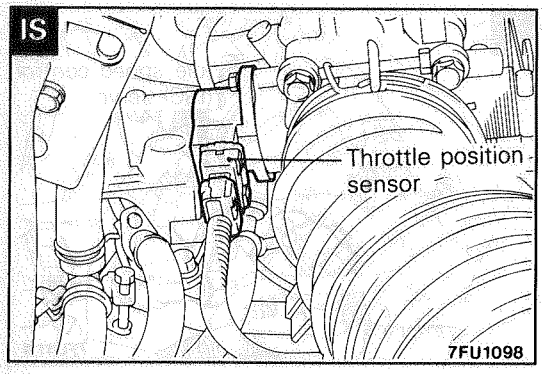

T

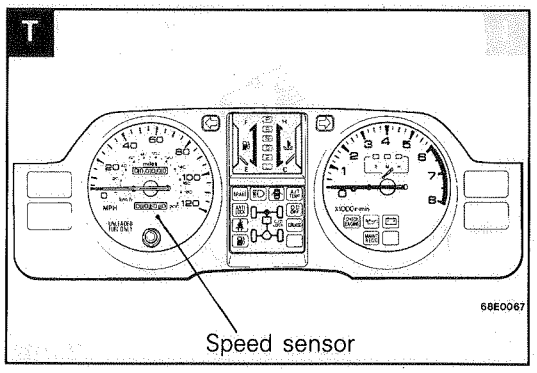

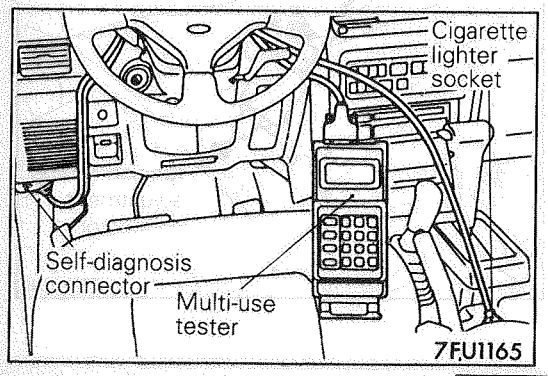

COMPONENT INSPECTION PROCEDURE

USING MULTI-USE TESTER (MUT)

(1) Check by the data reading and actuator test function. If any abnormality is found, check the body harness, components, etc. and repair as necessary.
(2) After repair, check again with the MUT to make sure that the input and output signals are now normal.
(3) Erase the self-diagnosis trouble code in memory.
(4) Disconnect the MUT.
(5) Start the engine and perform running test, etc. to make sure that the troubles have been corrected.

TSB Revision

POWER SUPPLY AND IGNITION SWITCH-IG

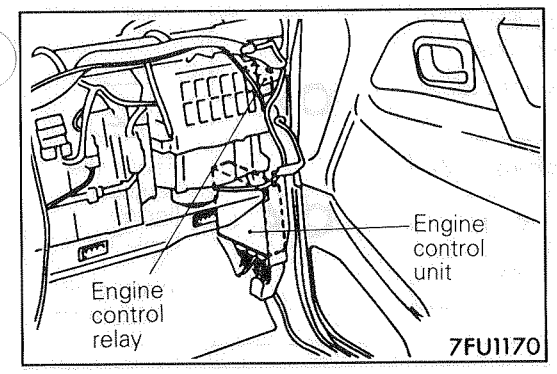

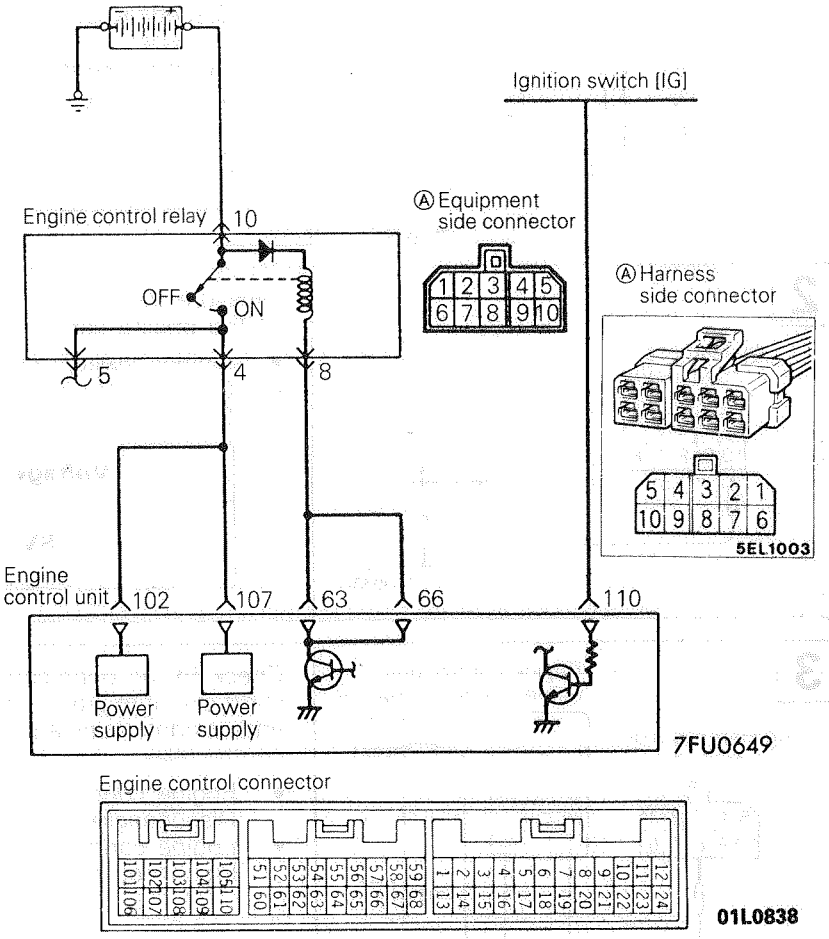

OPERATION

- While the ignition switch is ON, battery power supply is supplied to the engine control unit, injectors, air-flow sensor, etc.
- When the ignition switch is switched ON, battery voltage is supplied from the ignition switch to the engine control unit. When battery voltage is supplied to the engine control unit, the power transistor is switched ON and current flows to the engine control relay coil.
- As a result, the engine control relay switch is switched ON, and power is supplied, by way of the engine control relay switch, from the battery to the engine control unit.

INSPECTION
Using Multi-use tester (MUT)

Function	Item No.	Data display	Check conditions	Standard value V
Data reading	16	Engine control unit power-supply voltage	Ignition switch: ON	SV

HARNESS INSPECTION

1

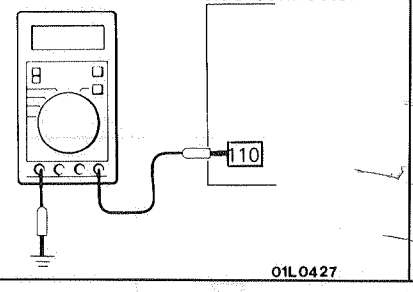

Measure the input voltage from the ignition switch (IG) terminal.

- Engine control unit connector: Disconnected

Ignition switch	Voltage (V)
OFF	0–1
ON	SV

OK → 2

NG → Repair the harness. (Ignition switch – 110) or inspect the ignition switch.

2

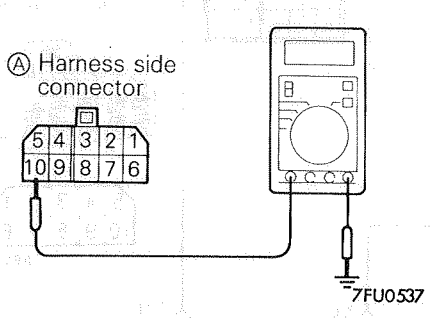

Measure the power supply voltage of the engine control relay

- Ignition switch: OFF
- Control relay connector: Disconnected

Voltage (V)
SV

OK → 3

NG → Repair the harness. (Battery– Ⓐ10)

3

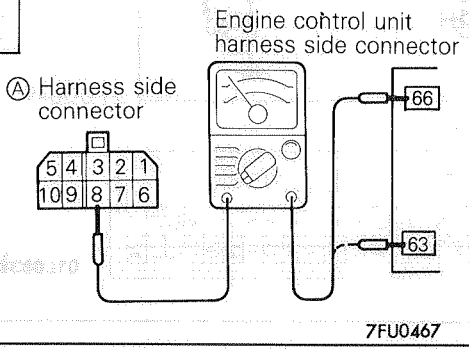

Check for an open-circuit, or a short-circuit to ground, between the engine control unit and the engine control relay.

- Engine control unit connector: Disconnected
- Engine control relay connector: Disconnected

OK → 4

NG → Repair the harness. (Ⓐ8 – 63 Ⓐ8 – 66)

4

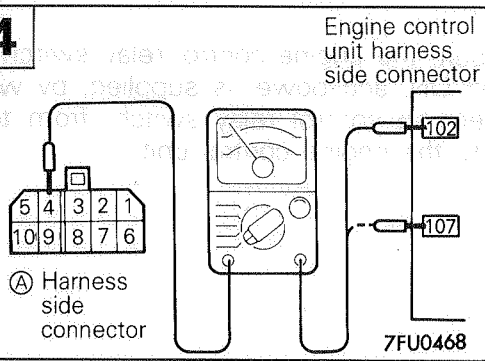

Check for an open-circuit, or a short-circuit to ground, between the engine control unit and the engine control relay.

- Engine control relay connector: Disconnected
- Engine control unit connector: Disconnected

OK → STOP

NG → Repair the harness. (Ⓐ4 – 102 107)

5

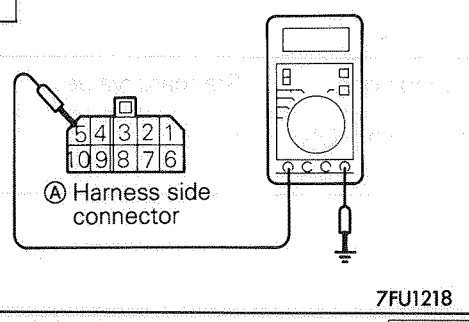

Measure the power supply voltage of the actuator.

- Control relay connector: Connected
- Engine control unit connector: Connected

Engine	Voltage (V)
Cranking	8 or higher
Racing	SV

OK → STOP

NG → Control relay or engine control unit is defective.

TSB Revision

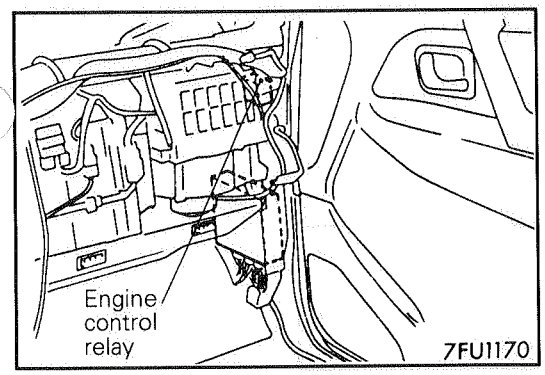

ENGINE CONTROL RELAY INSPECTION

(1) Remove the control relay.

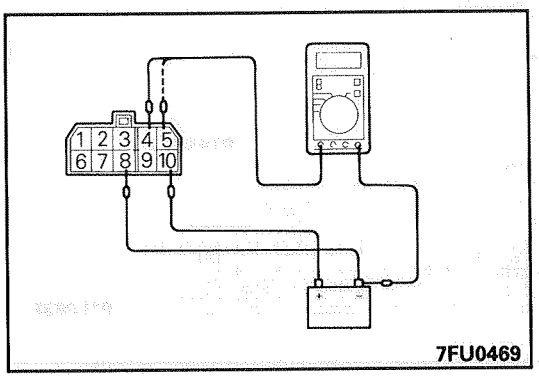

(2) Using jumper wires, connect terminal ⑩ of the control relay to the ⊕ terminal of the battery and connect terminal ⑧ of the relay to the ⊖ terminal of the battery.

CAUTION

- **When connecting the jumper wires, be careful not to connect them to the wrong terminals, since this could damage the relay.**

(3) Measure the voltage at terminal ④ and terminal ⑤ of the control relay while coming off and on the connection of the jumper wire to the battery ⊖ terminal.

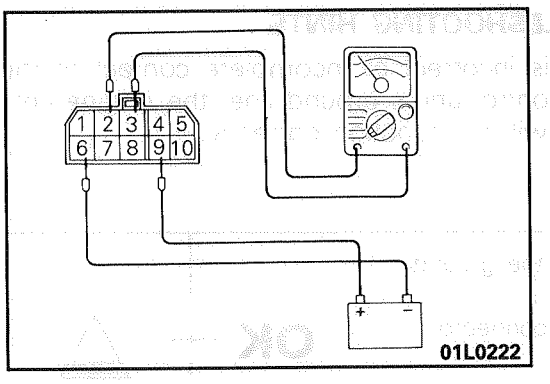

Jumper wire	Terminal 4 voltage	Terminal 5 voltage
Connected	SV	SV
Disconnected	0V	0V

(4) Using jumper wires, connect terminal ⑨ of the control relay to the ⊕ terminal of the battery and connect terminal ⑥ of the relay to the ⊖ terminal of the battery.

(5) Check the continuity between at terminal ② and terminal ③ of the control relay while coming off and on the connection of the jumper wire to the battery ⊖ terminal.

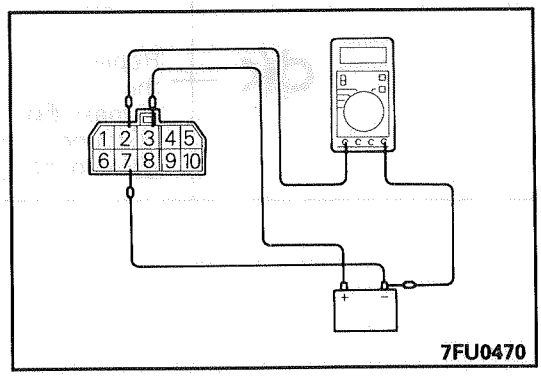

Jumper Wire	Continuity between Terminals 2 and 3
Connected	Continuity
Disconnected	No Continuity

(6) Using jumper wires, connect terminal ③ of the control relay to the ⊕ terminal of the battery and connect terminal ⑦ of the relay to the ⊖ terminal of the battery.

(7) Measure the voltage at terminal ② of the control relay while coming off and on the connection of the jumper wire to the battery ⊖ terminal.

Jumper Wire	Terminal 2 Voltage
Connected	SV
Disconnected	0V

(8) Replace the control relay if faulty.

ENGINE CONTROL UNIT POWER GROUND

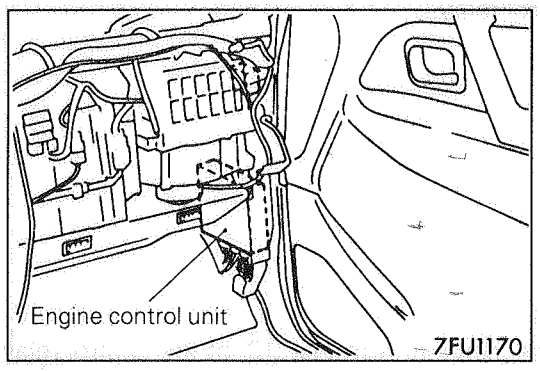

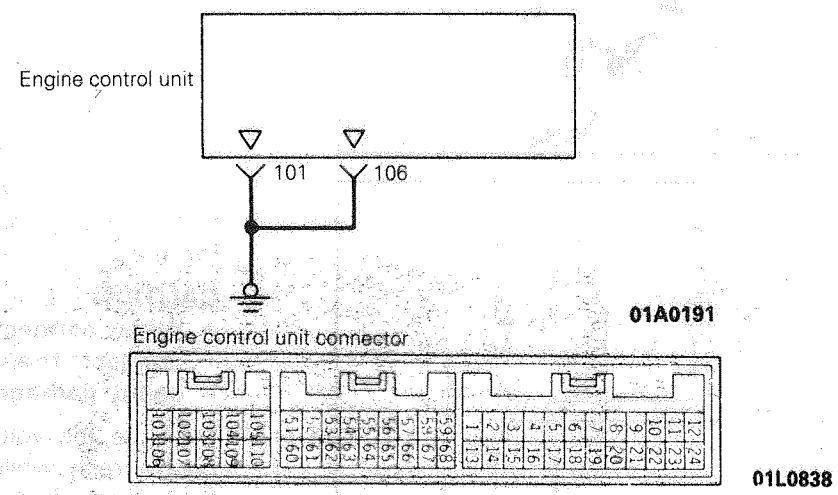

OPERATION

Grounds of the engine control unit

TROUBLESHOOTING HINTS

If there is incorrect or incomplete contact of the engine control unit's ground line, the engine control unit will not function correctly.

HARNESS INSPECTION

1	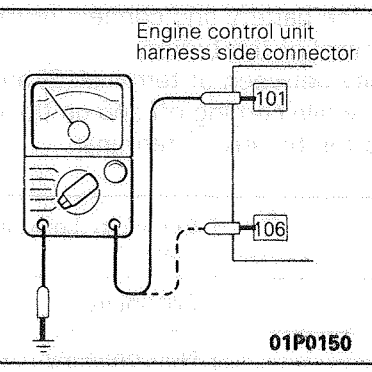	Check for continuity of the ground circuit. • Engine control unit connector: Disconnected	OK → STOP NG → Repair the harness. 101 –Ground 106–Ground

FUEL PUMP

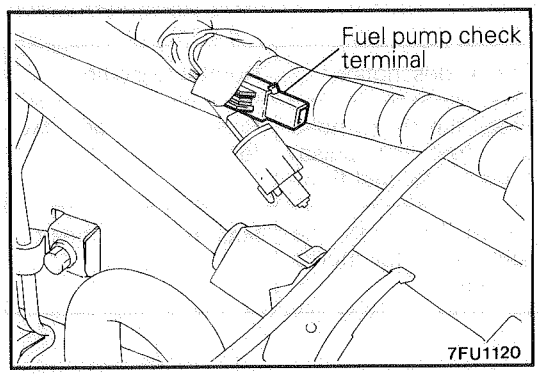

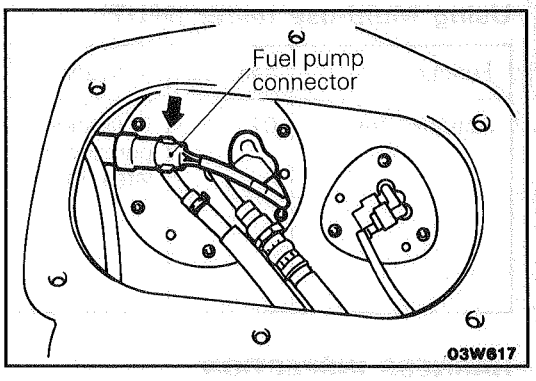

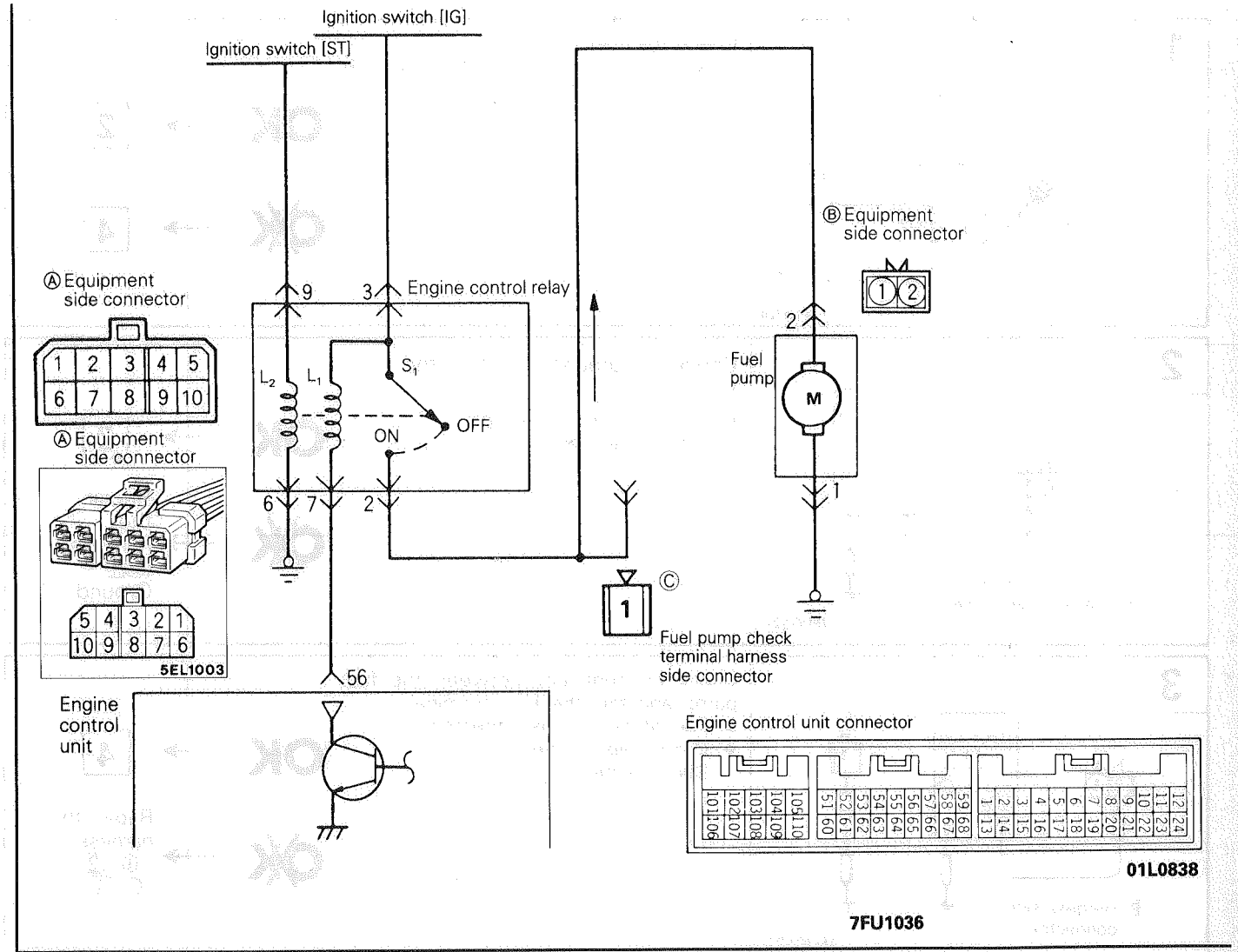

OPERATION

- Activates the fuel pump during engine cranking and while the engine is running.
- When the ignition switch is set to the START position, current flows, by way of the control relay coil, from the ignition switch to earth. As a result, the control relay switch is switched ON, and the power for activation of the fuel pump is supplied, by way of the control relay switch, from the battery to the fuel pump.
- While the engine is running, the engine control unit switches ON the power transistor, after which current flows to the control relay coil, and the power for activation of the fuel pump is supplied to the fuel pump.
- When the control relay switch is switched ON, battery voltage is also applied to the engine control unit, and so the engine control unit detects the fact that the power for activation of the fuel pump is being supplied to the fuel pump.

INSPECTION

Using Multi-use tester (MUT)

Function	Item No.	Activation	Check conditions	Check description	Normal condition
Actuater test	07	Activates fuel pump and circulates fuel.	• Engine cranking • Fuel pump forced activation Make the check under both of above conditions.	Pinch the return hose and feel the pulsations of the fuel flow.	Pulsations can be felt.
				Listen (close to the fuel tank) for pump sounds.	Sounds can be heard.

HARNESS INSPECTION

1

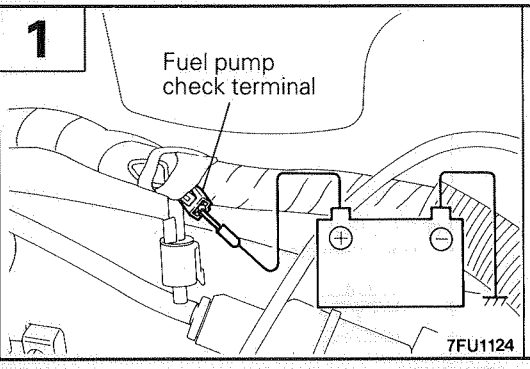

Check the fuel pump.
- Apply battery voltage to the checking terminal and operate the pump.

OK → 2

NG → 4

2

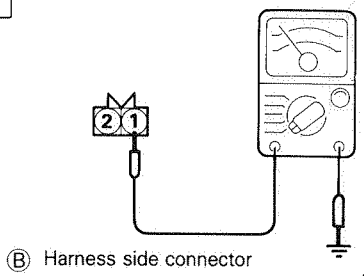

Check the ground circuit of the fuel pump.
- Fuel pump connector: Disconnected

OK → 3

NG → Repair the harness. (Ⓑ 1 – Ground)

3

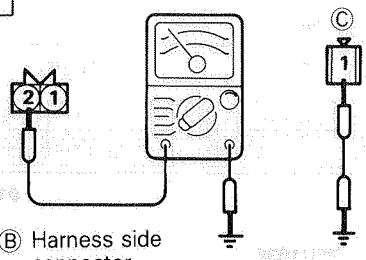

Check for continuity between the fuel pump and the checking terminal.
- Fuel connector: Disconnected
- Control relay connector: Disconnected

OK → 4

NG → Repair the harness. (Ⓑ 2 – Ⓒ 1)

4

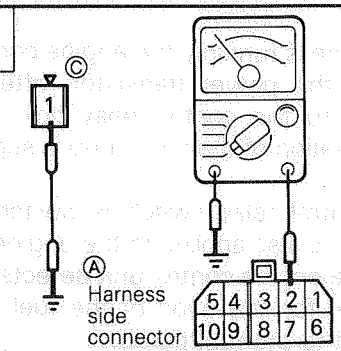

Check for continuity between the checking terminal and the control relay terminal.
- Control relay connector: Disconnected
- Fuel pump connector: Disconnected

OK → 5

NG → Repair the harness. (Ⓐ 2 - Ⓒ 1)

TSB Revision

5

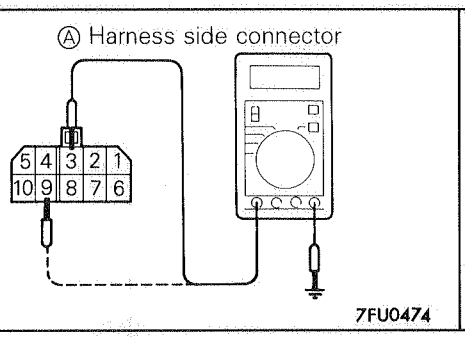

Measure the power supply voltage of the control relay.

- Control relay connector: Disconnected

Ignition switch	Voltage (V)
START (Ⓐ9 when checking)	8 or higher
ON (Ⓐ3 when checking)	SV

OK → 6

NG → Repair the harness. (Ignition switch [ON]–Ⓐ3 Ignition switch [ST]–Ⓐ9) or check the ignition switch

6

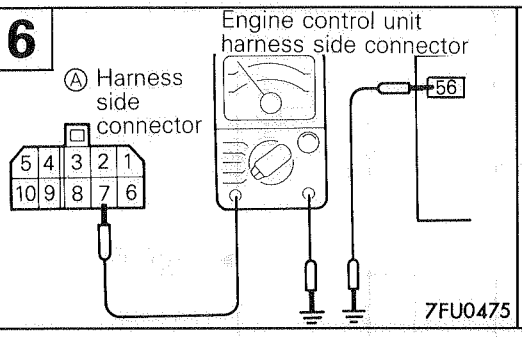

Check for an open-circuit, or a short-circuit to ground, between the control relay and the engine control unit.

- Control relay connector: Disconnected
- Engine control unit connector: Disconnected

OK → 7

NG → Repair the harness. (Ⓐ7 – 56)

7

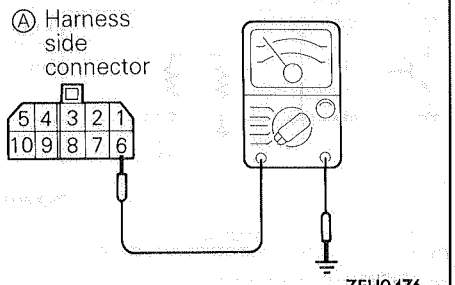

Check for continuity of the ground circuit.

- Control relay connector: Disconnected

OK → 8

NG → Repair the harness. (Ⓐ6 – Ground)

8

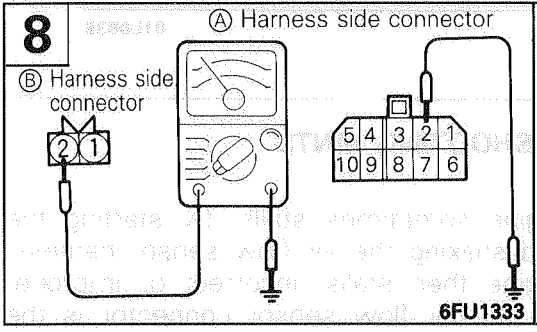

Check for an open-circuit, or a short-circuit to ground, between the control relay and the fuel pump.

- Control relay connector: Disconnected
- Fuel pump connector: Disconnected

OK → STOP

NG → Repair the harness. (Ⓐ2–Ⓑ2)

9

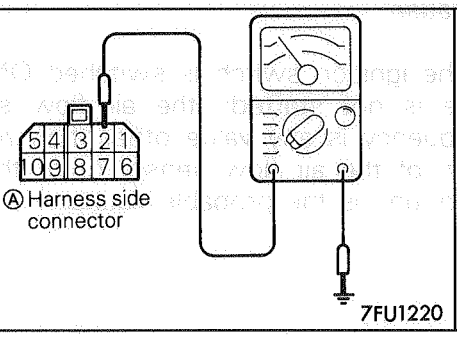

Measure the power supply voltage of the fuel pump.

- Control relay connector: Connected
- Engine control unit connector: Connected

Engine	Voltage (V)
Cranking	8 or higher
Racing	SV

OK → STOP

NG → Control relay or engine control unit is defective.

ENGINE CONTROL RELAY INSPECTION

Refer to P. 13-37.

FUEL PUMP INSPECTION

Refer to P. 13-91.

AIR FLOW SENSOR

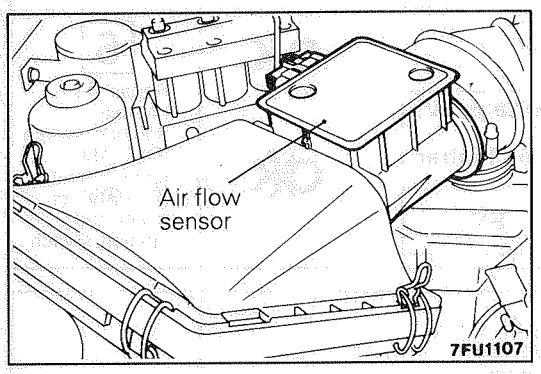

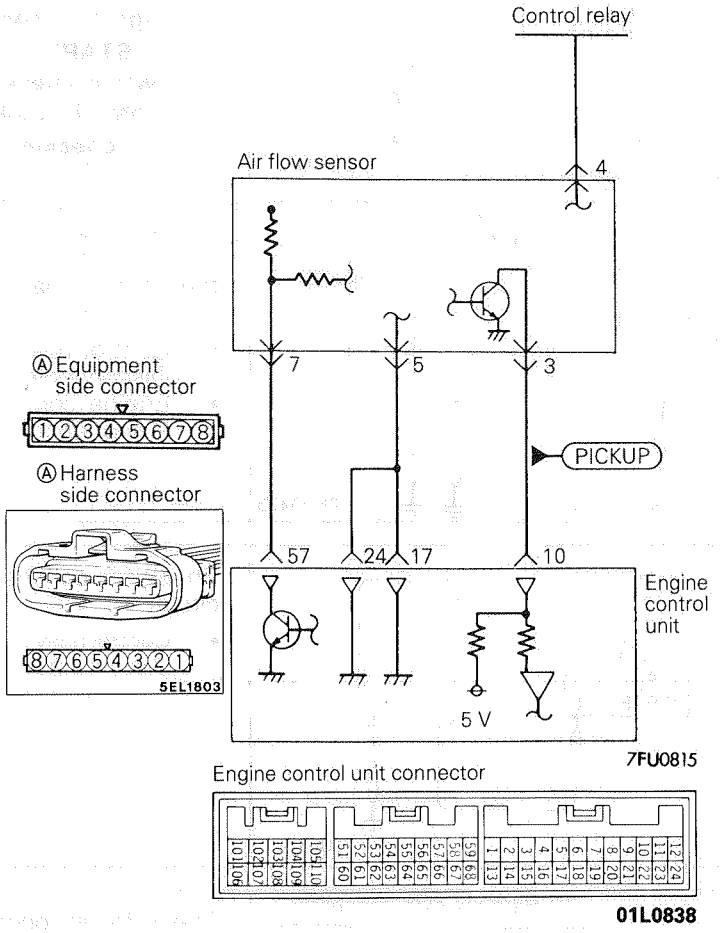

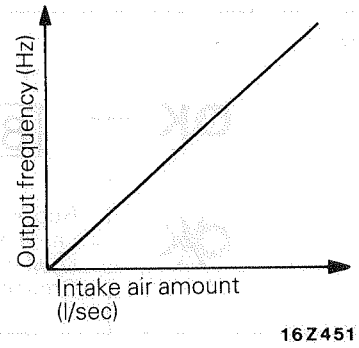

OPERATION

- The flow sensor is incorporated within the air cleaner; it functions to convert the amount of engine air intake to pulse signals of a frequency proportional to the amount of engine air intake, and to input those signals to the engine control unit. The engine control unit then, based upon those signals, calculates the amount of fuel injection, etc.
- The power for the air flow sensor is supplied from the control relay to the air flow sensor, and is grounded at the engine control unit. The air flow sensor, by intermitting the flow of the 5V voltage applied from the engine control unit, produces pulse signals.

TROUBLESHOOTING HINTS

Hint 1:
If the engine sometimes stalls, try starting the engine and shaking the air flow sensor harness. If the engine then stalls, incorrect or improper contact of the air flow sensor connector is the probable cause.
Hint 2:
If, when the ignition switch is switched ON (but the engine is not started), the air flow sensor output frequency is any value other than zero, a malfunction of the air flow sensor or of the engine control unit is the probable cause.

TSB Revision

Hint 3:
If idling is possible even though the air flow sensor output frequency is deviated from the standard value, the cause is usually a malfunction other than of the air flow sensor.

[Examples]
(1) The flow of air within the air flow sensor is disturbed. (Air duct disconnection or clogged air cleaner element.)
(2) Incomplete combustion within a cylinder. (Malfunction of spark plugs, ignition coil, injectors, compression pressure, etc.)
(3) Air is taken into the intake manifold through a leaking gasket, etc.

INSPECTION

Using Multi-use tester (MUT)

Air flow sensor

Function	Item No.	Data display	Check conditions	Engine conditions	Standard value Hz
Data reading	12	Sensor detection air flow (frequency)	• Engine coolant temperature: 80–95°C (176–203°F) • Lights and accessories: OFF • Transmission: neutral (P range for vehicles with A/T) • Steering wheel: neutral position	700 rpm (Idling)	22–48
				2,000 rpm	60–100
				Racing	Frequency increases by racing.

NOTE
When the vehicle is new [driven approximately 500 km (300 miles) or less], the air-flow sensor output frequency may be approximately 10% higher than indicated above.

Air flow sensor reset signal

Function	Item no.	Data display	Inspection condition	Engine state	Normal display
Data list	34	Reset signal condition	• Engine is warming up	700 rpm (Idle)	ON
				2,000 rpm	OFF

Volumetric efficiency

Function	Item no.	Data display	Inspection condition	Engine condition	Standard value
Data list	37	Volumetric efficiency	• Engine coolant temperature: 80–95°C (176–203°F) • Lights, electrical cooling fan and all accessories: OFF • Transmission: Neutral (P range for vehicles with A/T) • Steering wheel: Straight forward position	700 rpm (Idling)	15–35%
				2,000 rpm	15–35%
				Racing	Volumetric efficiency increases according to amount of racing.

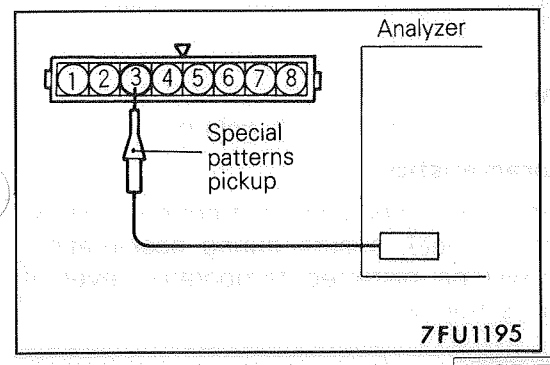

Wave Pattern Inspection Using an Analyzer

Measurement Method

(1) Disconnect the air flow sensor connector, and connect the special tool (test harness: MB991348) in between. (All terminals should be connected.)
(2) Connect the analyzer special patterns pickup to terminal ③ of the air flow sensor connector.

Standard wave pattern

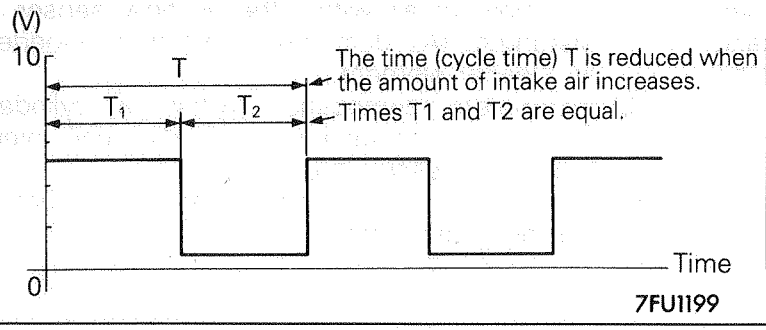

7FU1199

Observation conditions

Function	Special patterns
Pattern height	Low
Pattern selector	Display
Engine rpm	Idle rpm (700 rpm)

Observation conditions (from conditions on previous page, engine speed is increased by racing.)

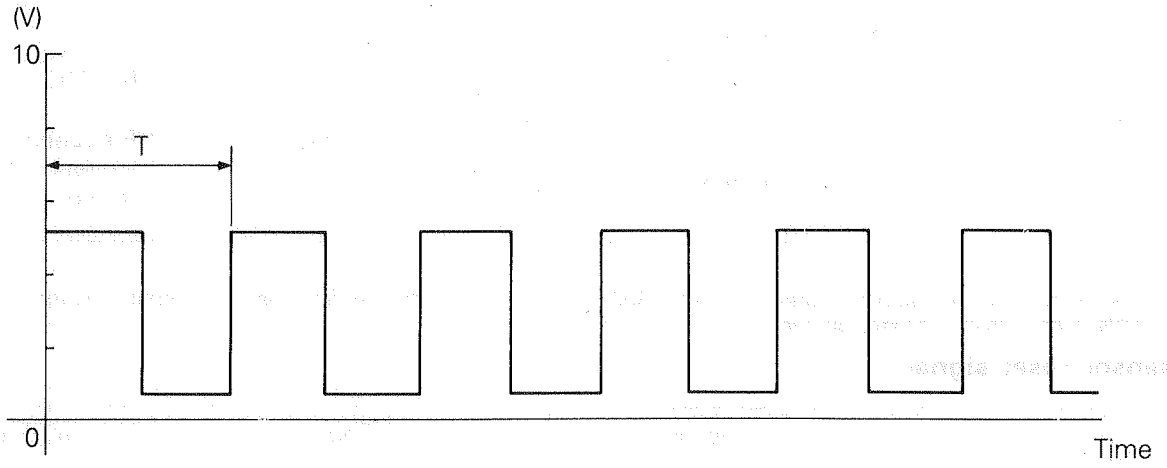

7FU0880

Wave pattern observation points

Check that cycle time T becomes shorter and the frequency increases when the engine speed is increased.

Examples of abnormal wave patterns

- Example 1

  Cause of problem
  Sensor interface malfunction

  Wave pattern characteristics
  Rectangular wave pattern is output even when the engine is not started.

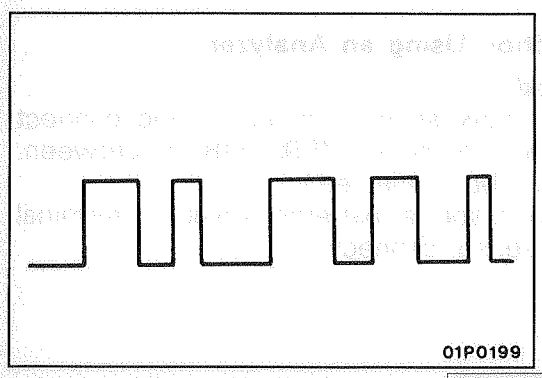

01P0199

- Example 2

  Cause of problem
  Damaged rectifier or vortex generation column

  Wave pattern characteristics

  Unstable wave pattern with non-uniform frequency. However, when an ignition leak occurs during acceleration, the wave pattern will be distorted temporarily, even if the air flow sensor is normal.

HARNESS INSPECTION

1

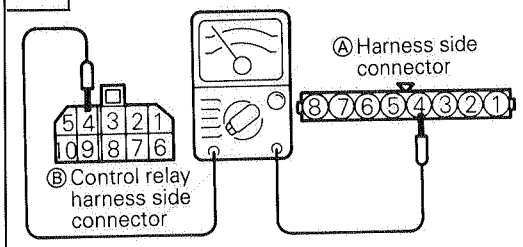

Check the continuity between the air flow sensor and the control relay.
- Control relay connector: Disconnected
- Air flow sensor connector: Disconnected

NOTE
- Touch the ohmmeter probes to both ends of the harness.

OK → 2

NG → Repair the harness. (Ⓐ4–Ⓑ4)

2

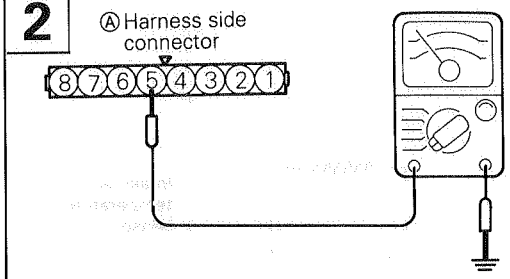

Check for continuity of the ground circuit.
- Connector: Disconnected

OK → 3

NG → Repair the harness. (Ⓐ5–17, 24)

3

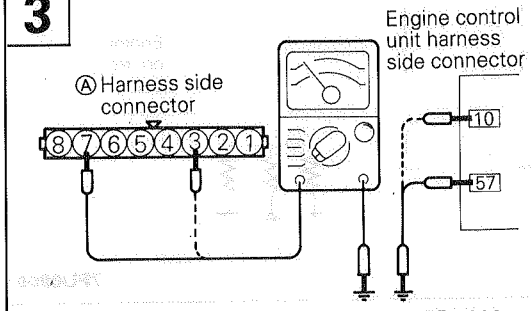

Check for open-circuit or short circuit between the air flow sensor and the engine control unit.
- Air flow sensor connector: Disconnected
- Engine control unit connector: Disconnected

OK → 4

NG → Repair the harness. (Ⓐ3–10) (Ⓐ7–57)

4

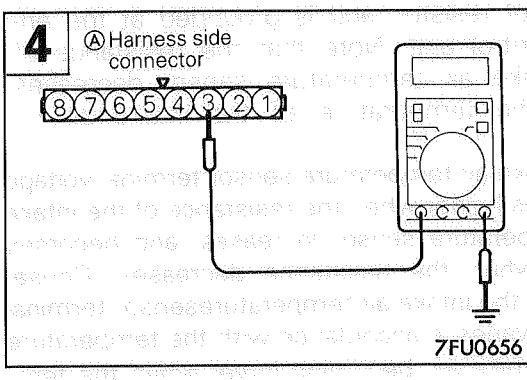

Measure the applied voltage.
- Air flow sensor connector: Disconnected
- Engine control unit connector: Connected
- Ignition switch: ON

Voltage (V)
4.8–5.2

OK → STOP

NG → Replace the engine control unit.

INTAKE AIR TEMPERATURE SENSOR

M13YGAA

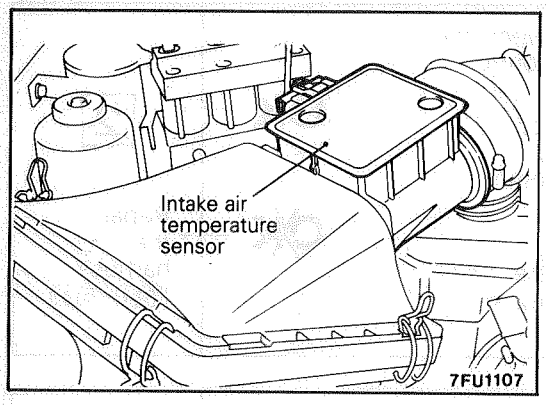

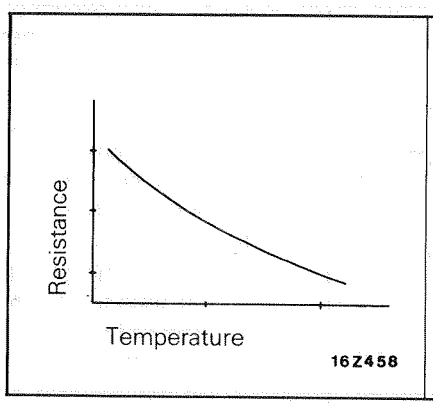

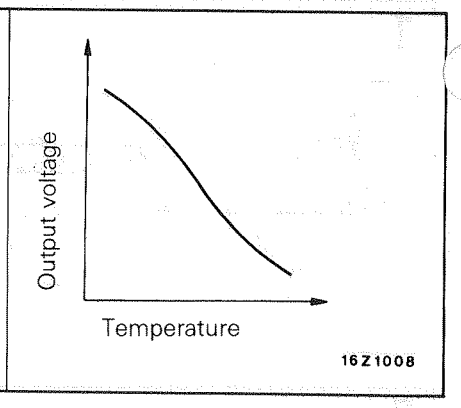

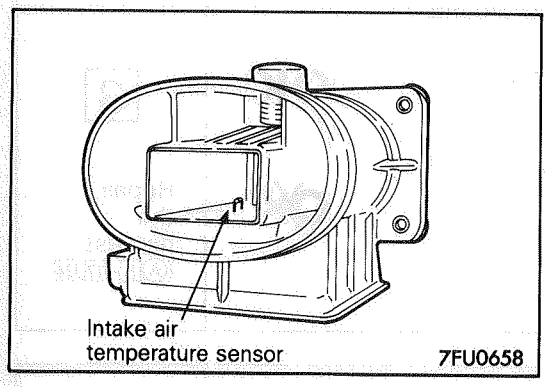

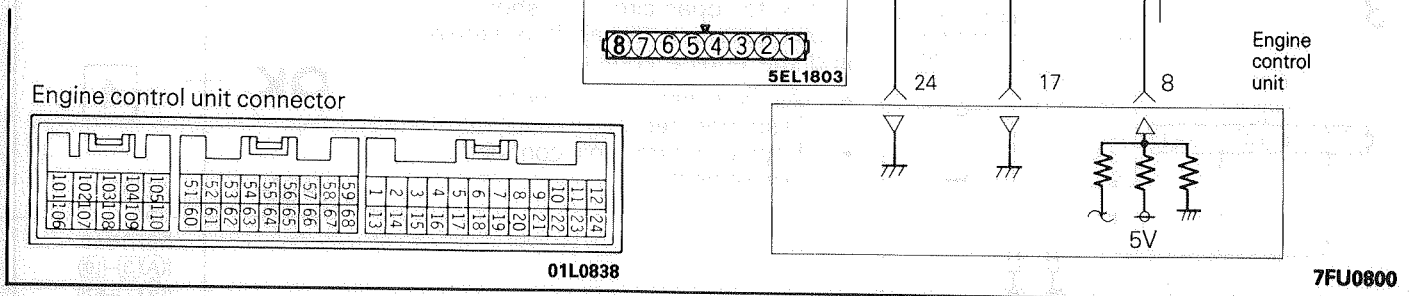

OPERATION

- The intake air temperature sensor functions to convert the temperature of the air (intaken to the engine) to voltage, and to input that voltage (as signals) to the engine control unit. The engine control unit, based upon those signals, then corrects the amount fo fuel injection, etc.
- The 5V power supply within the engine control unit is supplied, by way of the resistance within the unit, to the intake air temperature sensor, it passes through the intake air temperature sensor, which is a type of resistor, and is grounded at the engine control unit. Note that the resistance of the intake air temperature sensor decreases when the temperature of the intake air increases.
- The intake air temperature sensor terminal voltage becomes higher when the resistance of the intake air temperature sensor increases, and becomes lower when the resistance decreases. Consequently, the intake air temperaturesensor terminal voltage varies in accordance with the temperature of the intake air, becoming lower when the temperature of the intake air increases.

TROUBLESHOOTING HINTS

Because the intake air temperature of the intake air in the air cleaner, it indicates a temperature different than the temperature of the outside air when the engine is running.

INSPECTION

Using Multi-use tester (MUT)

Function	Item No.	Data display	Check conditions	Intake air temperature °C (°F)	Standard value °C
Data reading	13	Sensor detection temperature	Ignition switch: ON Or, engine running	When –20 (–4)	–20
				When 0 (32)	0
				When 20 (68)	20
				When 40 (104)	40
				When 80 (176)	80

HARNESS INSPECTION

1

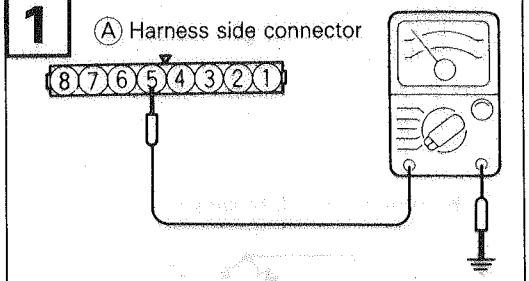

Check for continuity of the ground circuit.
- Air flow sensor connector: Disconnected

OK → 2

NG → Repair the harness. (Ⓐ5 – 17, 24)

2

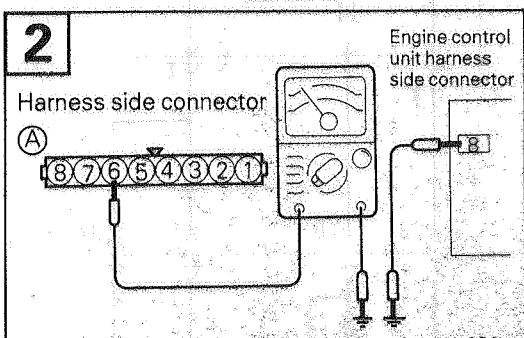

Check for open-circuit or short circuit between the intake air temperature sensor and the engine control unit.
- Air flow sensor connector: Disconnected
- Engine control unit connector: Disconnected

OK → 3

NG → Repair the harness. (Ⓐ6 – 8)

3

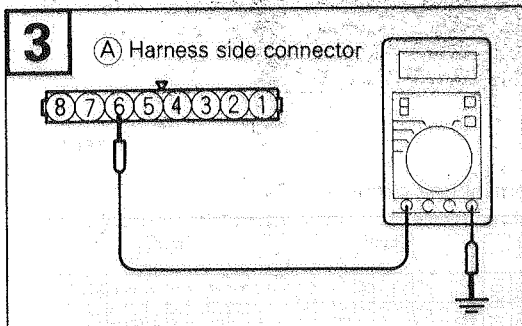

Measure the power supply voltage.
- Air flow sensor connector: Disconnected
- Ignition switch: ON
- Engine control unit connector: Connected

Voltage (V)
4.5–4.9

OK → STOP

NG → Repair the engine control unit

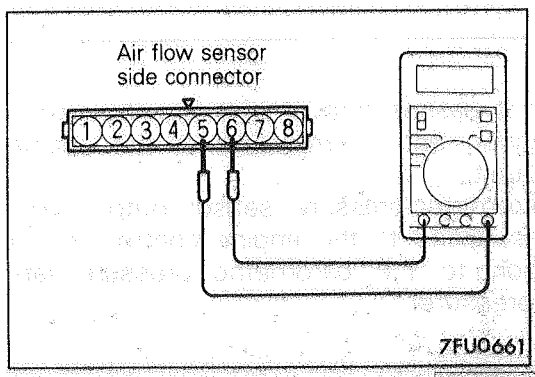

SENSOR INSPECTION

(1) Disconnect the air flow sensor connectors.
(2) Measure resistance between terminals ⑤ and ⑥.

Temperature °C (°F)	Resistance kΩ
0 (32)	6.0
20 (68)	2.7
80 (176)	0.4

TSB Revision

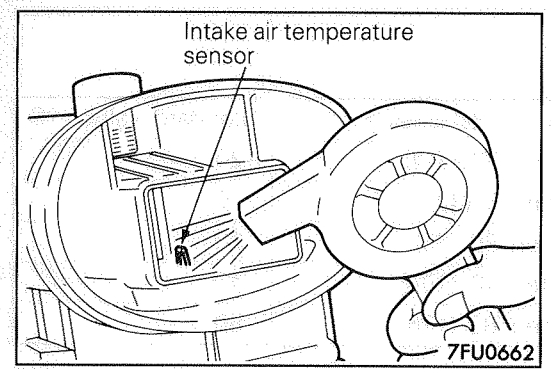

(3) Measure resistance while heating the sensor using a hair drier.

Temperature °C (°F)	Resistance kΩ
Higher	Smaller

(4) If the value deviates from the standard value or the resistance remains unchanged, replace the air flow sensor assembly.

BAROMETRIC PRESSURE SENSOR

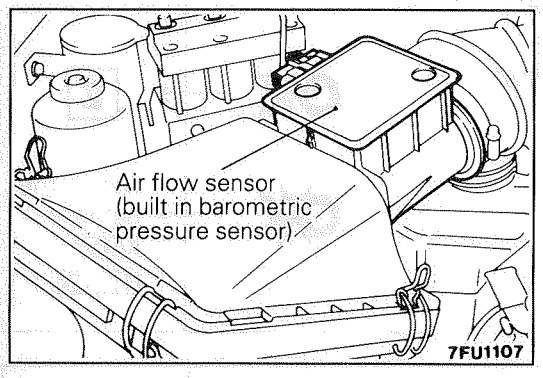

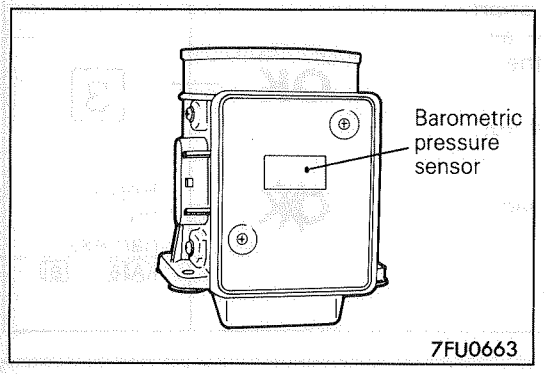

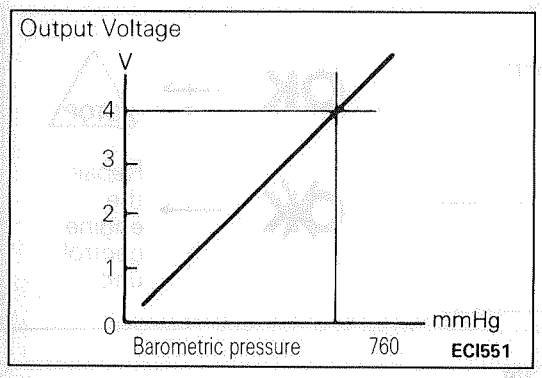

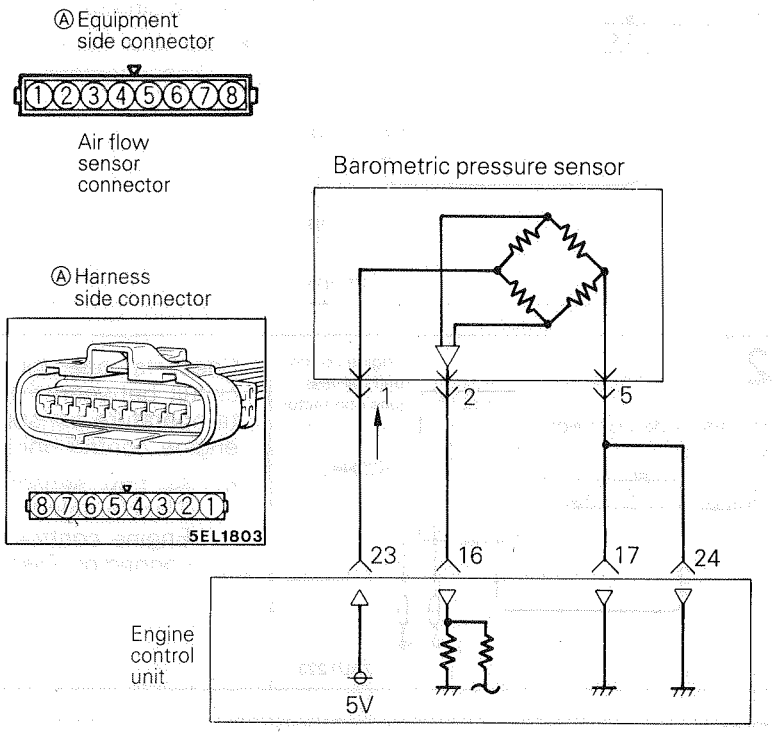

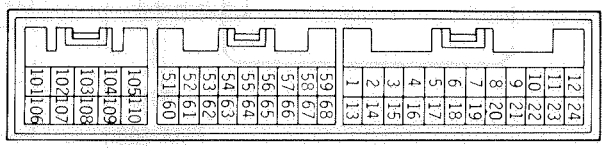

OPERATION

- The barometric pressure sensor functions to convert the barometric pressure to voltage, and to input that voltage (as signals) to the engine control unit. The engine control unit, based upon those signals, then corrects the amount of fuel injection, etc.
- The 5V power supply within the engine control unit is supplied to the barometric pressure sensor; it passes through the circuitry within the sensor, and is grounded at the engine control unit.
- The barometric-pressure sensor output voltage is supplied to the engine control unit in proportion to the barometric pressure (absolute pressure).

TROUBLESHOOTING HINTS

Hint 1:
If there is a malfunction of the barometric pressure sensor, driveability of the vehicle will become worse particularly at high altitude.

Hint 2:
If, during high-speed driving, there is a noticeable sharp drop of the displayed pressure of the barometric-pressure sensor, check for clogging of the air cleaner.

INSPECTION

Using Multi-use tester (MUT)

Function	Item No.	Data display	Check conditions	Altitude m (ft.)	Standard value mmHg
Data reading	25	Sensor detection pressure	Ignition switch: ON	When at 0 (0)	760
				When at 600 (1,969)	710
				When at 1,200 (3,937)	660
				When at 1,800 (5,906)	610

HARNESS INSPECTION

1

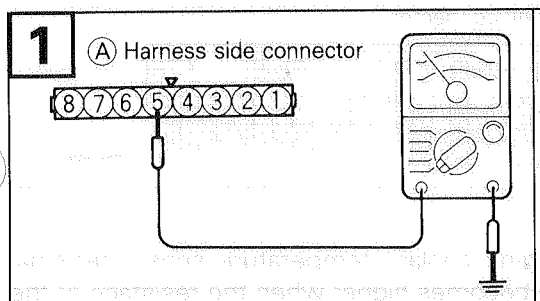

Check for continuity of the ground circuit.
- Air flow sensor connector: Disconnected

OK → 2

NG → Repair the harness. (Ⓐ5 – 17, 24)

2

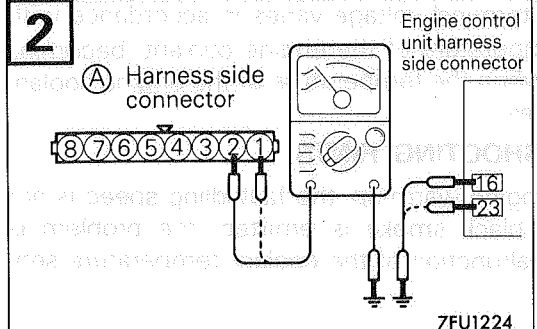

Check for open-circuit or short circuit between the barometric pressure sensor and the engine control unit.
- Air flow sensor connector: Disconnected
- Engine control unit connector: Disconnected

OK → 3

NG → Repair the harness. (Ⓐ2–16) (Ⓐ1–23)

3

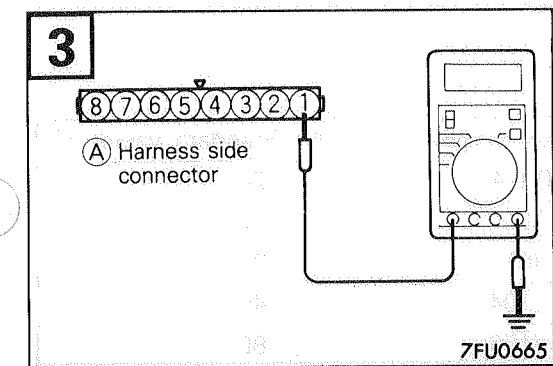

Measure the power supply voltage of the barometric pressure sensor
- Air flow sensor connector: Disconnected
- Ignition switch: ON
- Engine control unit connector: Connected

Voltage (V)
4.8–5.2

OK → STOP

NG → Replace the engine control unit

ENGINE COOLANT TEMPERATURE SENSOR

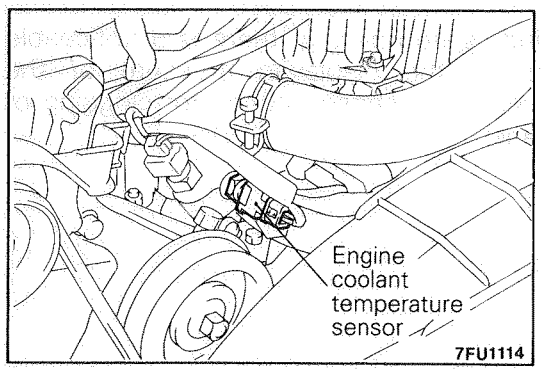

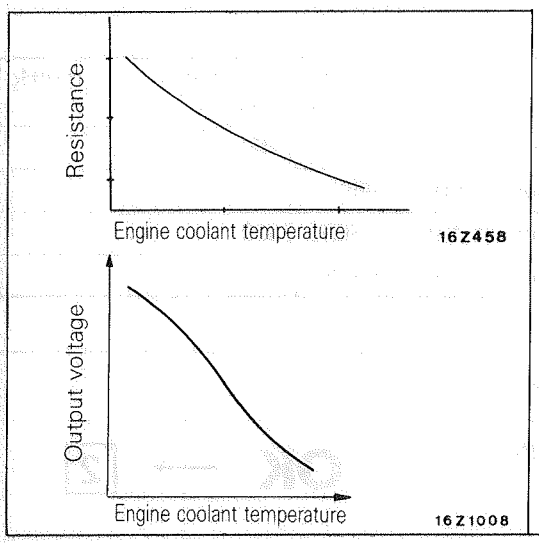

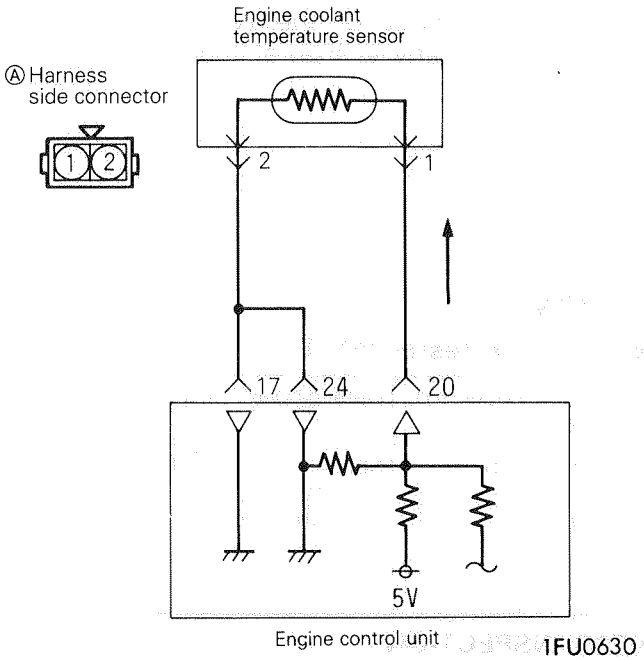

Engine control unit connector

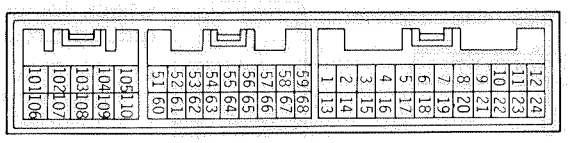

OPERATION

- The engine coolant temperature sensor functions to convert the barometric pressure to voltage, and to input that voltage (as signals) to the engine control unit.The engine control unit, based upon those signals, regulates the amount of fuel injection and the fast-idling speed when the engine is cold.
- The 5V power supply within the engine control unit is supplied, by way of the resistance within the unit, to the engine coolant temperature sensor; it passes through the engine coolant temperature sensor, which is a type of resistor, and is grounded at the engine control unit. Note that the resistance of the engine coolant temperature sensor decreases when the temperature of the engine coolant increases.
- The engine coolant temperature sensor terminal voltage becomes higher when the resistace of the engine coolant temperature sensor increases, and becomes lower when the resistance decreases. Consequently, the engine coolant temperature sensor terminal voltage varies in accordance with the temperature of the engine coolant, becoming lower when the temperature of the engine coolant increases.

TROUBLESHOOTING HINTS

If, during engine warm-up, the fast-idling speed is not correct, or black smoke is emitted, the problem is usually a malfunction of the coolant temperature sensor.

INSPECTION

Using Multi-use tester (MUT)

Function	Item No.	Data display	Check conditions	Engine coolant temperature °C (°F)	Standard value °C
Data reading	21	Sensor detection temperature	Ignition switch: ON or, engine running	When –20 (–4)	–20
				When 0 (32)	0
				When 20 (68)	20
				When 40 (104)	40
				When 80 (176)	80

TSB Revision

HARNESS INSPECTION

1

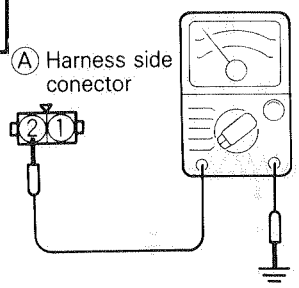

7FU0668

Check for continuity of the ground circuit.
- Connector: Disconnected

OK → 2

NG → Repair the harness. (Ⓐ 2 – 17, 24)

2

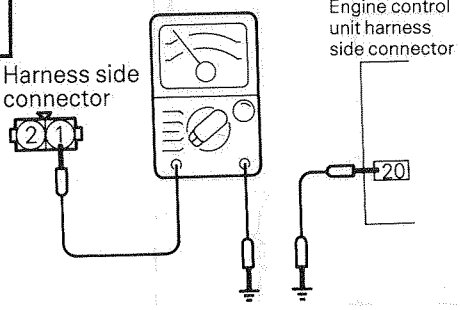

7FU1225

Check for open-circuit or short circuit between the engine coolant temperature sensor and the engine control unit.
- Engine coolant temperature sensor connector: Disconnected
- Engine control unit connector: Disconnected

OK → 3

NG → Repair the harness. (Ⓐ 1 – 20)

3

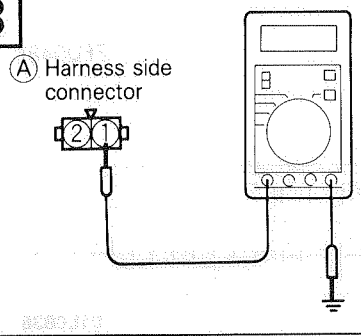

7FU0669

Measure the power supply voltage.
- Engine coolant temperature sensor connector: Disconnected
- Engine control unit connector: Connected
- Ignition switch: ON

Voltage (V)
4.5–4.9

OK → STOP

NG → Replace the engine control unit

SENSOR INSPECTION

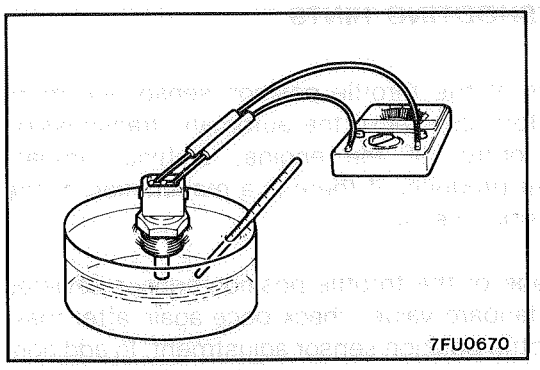

7FU0670

(1) Remove engine coolant temperature sensor from the intake manifold.

(2) With temperature sensing portion of coolant temperature sensor immersed in hot water check resistance.

Temperature °C (°F)	Resistance kΩ
0 (32)	5.8
20 (68)	2.4
40 (104)	1.1
80 (176)	0.3

(3) If the resistance deviates from the standard value greatly, replace the sensor.

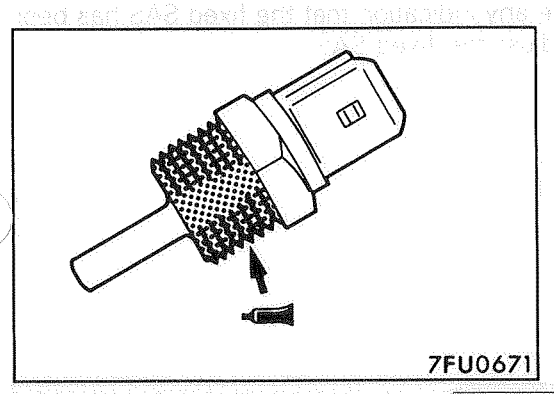

7FU0671

INSTALLATION

(1) Apply specified sealant to threaded portion.

Specified sealant: 3M Nut locking No. 4171 or equivalent

(2) Install engine coolant temperature sensor and tighten it to specified torque.

Sensor tightening torque: 30 Nm (22 ft.lbs)

(3) Fasten harness connectors securely.

THROTTLE POSITION SENSOR

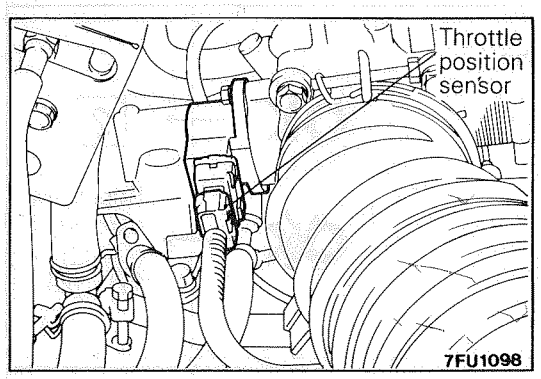

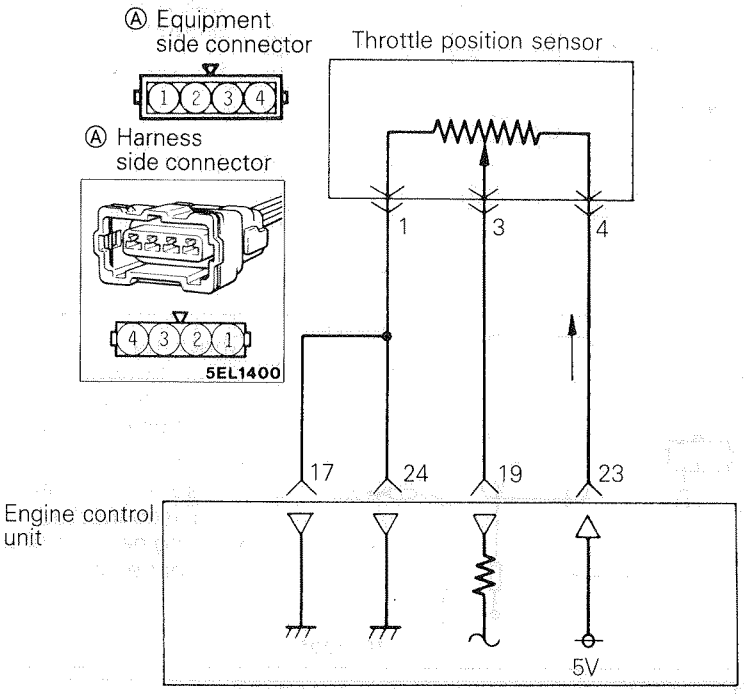

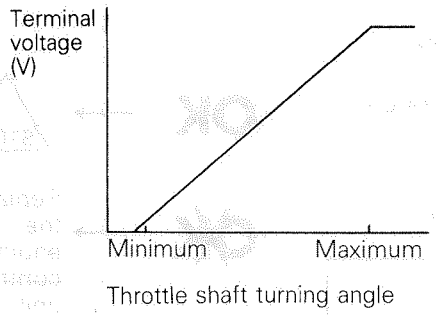

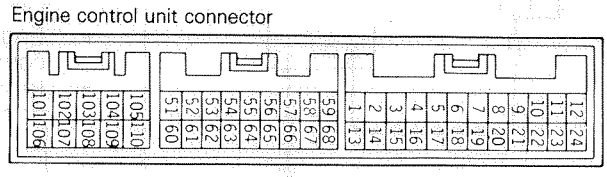

OPERATION

- The throttle position sensor functions to convert the degree of opening of the throttle valve to voltage, and to input that voltage (as signals) to the engine control unit. The engine control unit, based upon those signals, then regulates the amount of fuel injection, etc.
- The 5V power supply within the engine control unit is supplied to the throttle position sensor, after which it passes through the resistance within the sensor and is grounded at the engine control unit.
- When the throttle valve shaft is rotated all the way from the idling position to the fully open position, the resistance between the throttle position sensor's variable-resistance terminal and the ground terminal also increases in accordance with that rotation, and, as a result, the voltage of the throttle position sensor's variable-resistance terminal also becomes higher in accordance with that rotation.

TROUBLESHOOTING HINTS

Hint 1:
The signals of the throttle position sensor are more important fore control of the automatic transmission than for control of the engine; shifting "impact shocks" are producec if there is a malfunction of the throttle position sensor.
Hint 2:
If the voltage of the throttle position sensor deviates from the standard value, check once again after making the throttle position sensor adjustment. In addition, if there are any indication that the fixed SAS has been moved, adjust the fixed SAS.

INSPECTION

Using Multi-use tester (MUT)

Function	Item No.	Data display	Check conditions	Throttel valve	Standard value mV
Data reading	14	Sensor detection voltage	Ignition switch: left ON for 15 secondes or more	Set to idling position.	300 – 1,000
				Open gradually.	Becomes higher proportionally to valve opening
				Open fully.	4,500 – 5,500

HARNESS INSPECTION

1

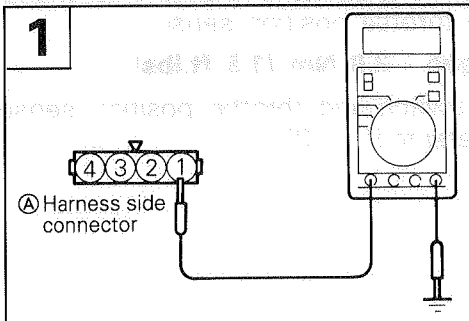

6FU1241

Check for continuity of the ground circuit.

- Throttle position sensor connector: Disconnected

OK → 2

NG → Repair the harness. (Ⓐ 4 – 17, 24)

2

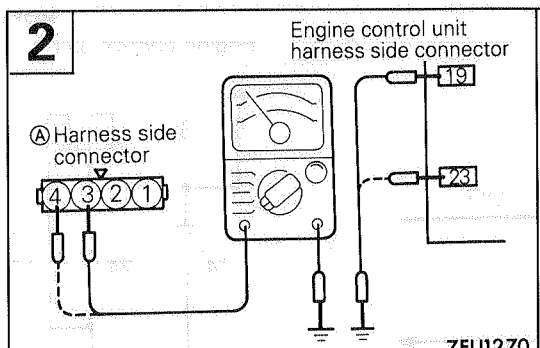

7FU1270

Check for open-circuit or short circuit between the throttle position sensor and the engine control unit.

- Throttle position sensor connector: Disconnected
- Engine control unit connector: Disconnected

OK → 3

NG → Repair the harness. (Ⓐ 3 – 19) (Ⓐ 4 – 23)

3

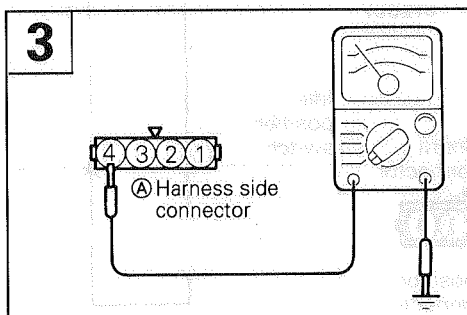

6FU1242

Measure the applied voltage.

- Throttle position sensor connector: Disconnected
- Engine control unit connector: Connected
- Ignition switch: ON

Voltage (V)
4.8–5.2

OK → STOP

NG → Replace the engine control unit.

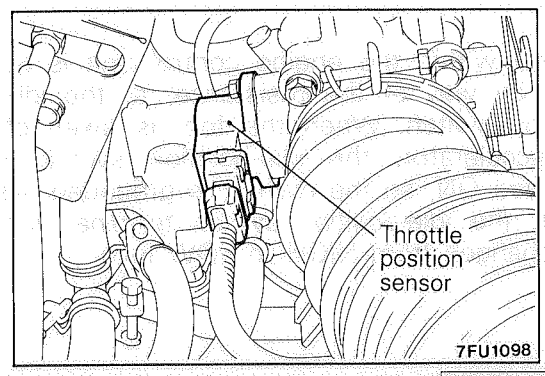

7FU1098

SENSOR INSPECTION

(1) Disconnect the throttle position sensor connector.

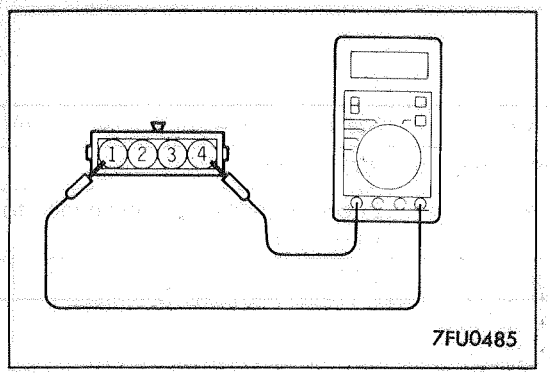

(2) Measure resistance between terminal ① (sensor ground) and terminal ④ (sensor power).

Standard value: 3.5–6.5 kΩ

(3) Connect a pointer type ohmmeter between terminal ① (sensor ground) and terminal ③ (sensor output).

(4) Operate the throttle valve slowly from the idle position to the full open position and check that the resistance changes smoothly in proportion with the throttle valve opening angle.

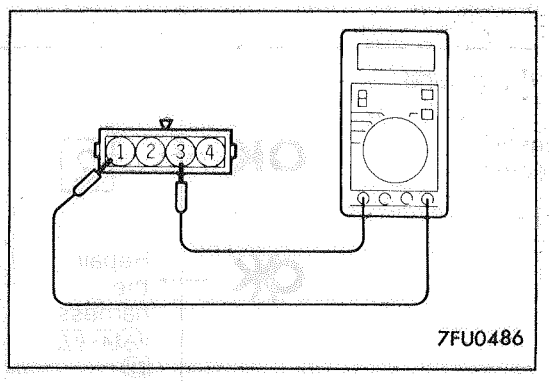

(5) If the resistance is out of specification, or fails to change smoothly, replace the throttle position sensor.

TPS installation torque: 2.0 Nm (1.5 ft.lbs)

For the idle position switch and throttle position sensor adjusting procedure, refer to P. 13-28.

IDLE POSITION SWITCH

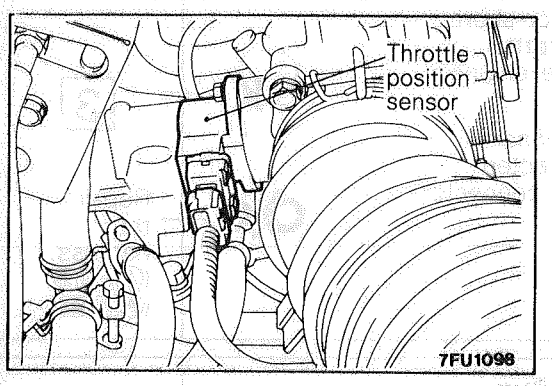

M13YKAA

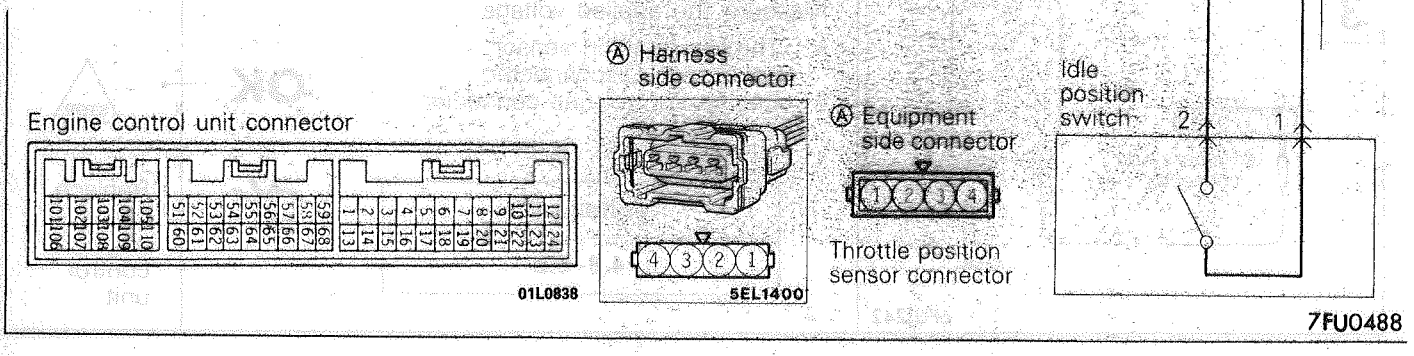

OPERATION

- The idle-position switch functions to convert (to HIGH/LOW-level voltage) data as to whether the accelerator is depressed or released, and to input that voltage (as signals) to the engine control unit. The engine control unit, based upon those signals, regulates the idle-speed control servo.
- Voltage within the engine control unit is applied, by way of the resistance, to the idle-position switch. When the foot is taken off the accelerator, the idle-position switch is switched ON, so the current is grounded. As result, the idle-position switch terminal voltage changes from HIGH to LOW level.

TROUBLESHOOTING HINTS

If there is an abnormal condition of the idle-position switch output even though the results of the checking of the idle-position switch harness and of the component itself indicate a normal condition, the cause may be presumed to be one of the following.

(1) Improper adjustment of the accelerator cable or the automatic-cruise-control cable.
(2) Improper adjustment of the fixed SAS.

INSPECTION

Using Multi-use tester (MUT)

Function	Item No.	Data display	Check conditions	Throttle valve	Normal display
Data reading	26	Switch status	Ignition switch: ON (Operate the accelerator several times and check.)	Set to idling position.	ON
				Open slightly.	OFF

HARNESS INSPECTION

1

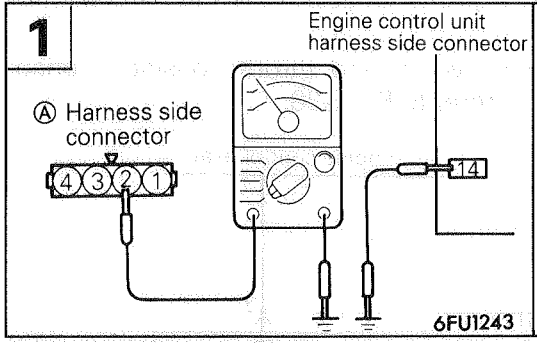

Check for open or short circuit between the idle position switch and the engine control unit.
- Engine control unit connector: Disconnected
- Idle position switch connector: Disconnected

OK → 2

NG → Repair the harness. (Ⓐ2–14)

2

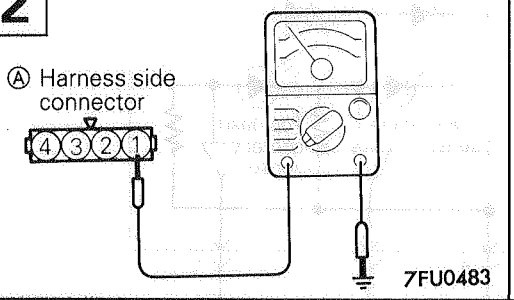

Check for continuity of the ground circuit.
- Throttle position sensor connector: Disconnected

OK → 3

NG → Repair the harness. (Ⓐ1–17, 24)

3

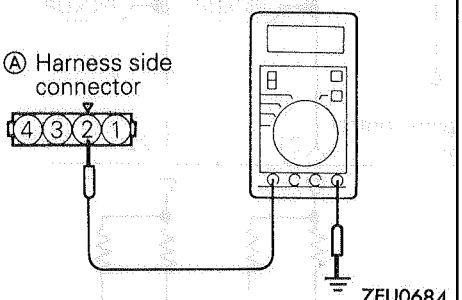

Measure the power supply voltage of the idle position switch.
- Throttle position sensor connector: Disconnected
- Engine control unit connector: Connected
- Ignition switch: ON

Voltage (V)
4 or higher

OK → STOP

NG → Replace the engine control unit.

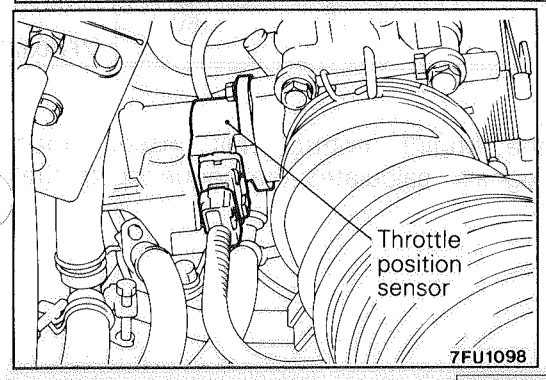

SENSOR INSPECTION

(1) With the accelerator pedal released, check to be sure that the throttle valve lever or the fixed SAS is pushed.

NOTE
If it is not pushed, adjust the fixed SAS (Refer to P.13–30.)

(2) Disconnect the throttle position sensor connector.

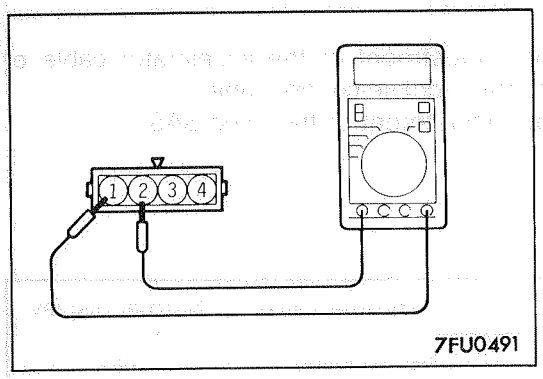

(3) Check the continuity across the throttle position sensor connector terminal ① (Sensor ground) and ② (Idle position switch).

Accelerator pedal	Continuity
Depressed	Non-conductive (∞Ω)
Released	Conductive (0Ω)

NOTE
If there is no continuity when the accelerator pedal is returned, loosen the throttle-position sensor installation screw; then, after turning all the way in the clockwise direction, check again.

(4) Replace the throttle-position sensor (idle-position switch incorporated) if there is a malfunction.

NOTE
For the idle position switch and throttle position sensor adjusting procedure, refer to P. 13-28.

TOP DEAD CENTER SENSOR

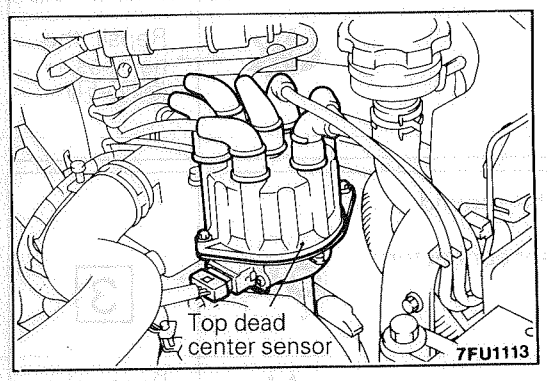

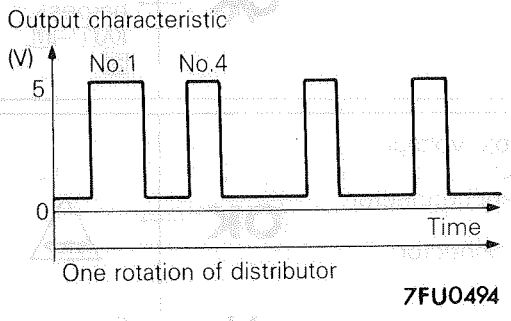

Engine control unit connector

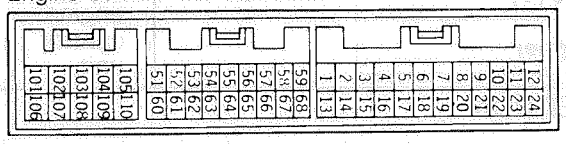

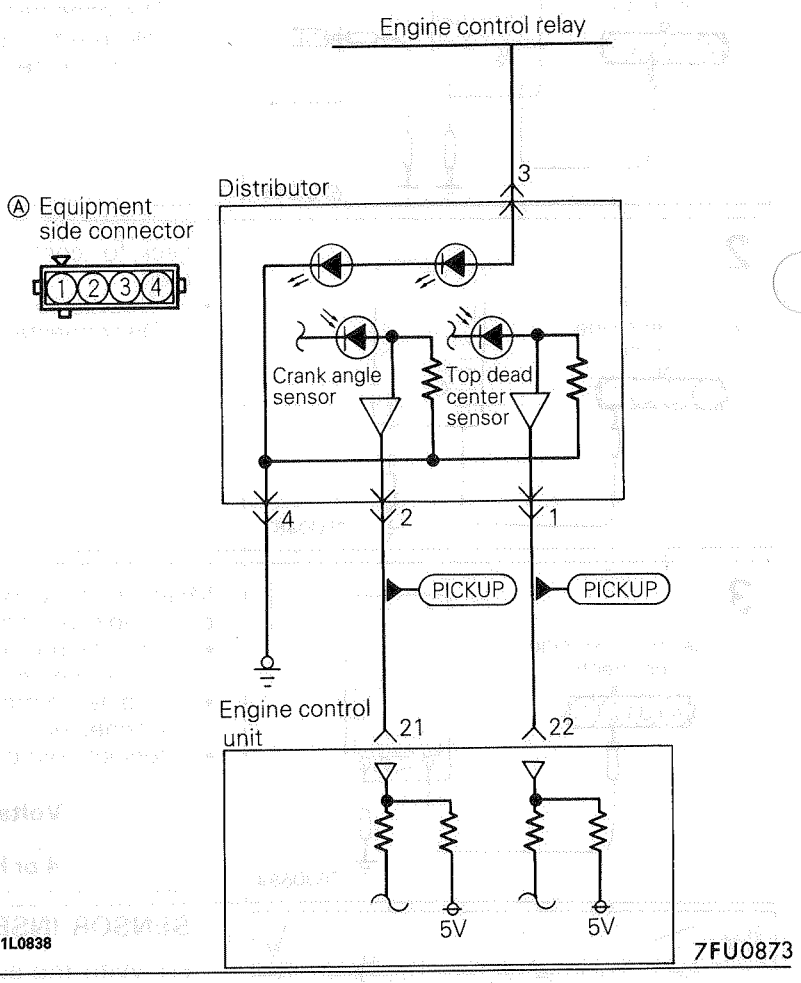

OPERATION

- The top dead center sensor functions to detect the top dead center position of the No. 1 cylinder and to convert those data to pulse signals that are input to the engine control unit. the engine control unit, based upon those signals, calculates the sequence of fuel injection.

- The power for the top dead center sensor is supplied from the control relay and is grounded to the vehicle body. The top dead center sensor, by intermitting the flow (to ground) of the 5V voltage applied from the engine control unit, produces pulse signals.

TROUBLESHOOTING HINTS

If there is a malfunction fof the top dead center sensor, the sequential injection will not be correct, resulting in such problems as engine stalling, unstable idling, and poor acceleration.

INSPECTION

Wave Pattern Inspection Using an Analyzer

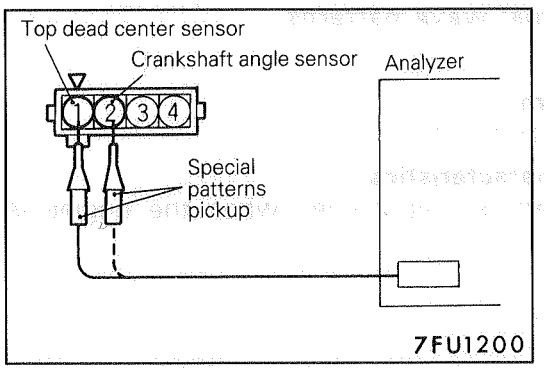

Measurement Method

(1) Disconnect the crankshaft angle sensor connector and connect the special tool (test harness: MB991348) in between. (All terminals should be connected.)
(2) Connect the analyzer special patterns pickup to terminal ① of the crankshaft angle sensor connector. (When inspecting the TDC sensor signal wave pattern.)
(3) Connect the analyzer special patterns pickup to terminal ② of the crankshaft angle sensor connector. (When inspecting the crankshaft angle sensor signal wave pattern.)

Standard wave pattern

Observation conditions

Function	Special patterns
Pattern height	Low
Pattern selector	Display
Engine rpm	Idle rpm. (700 rpm.)

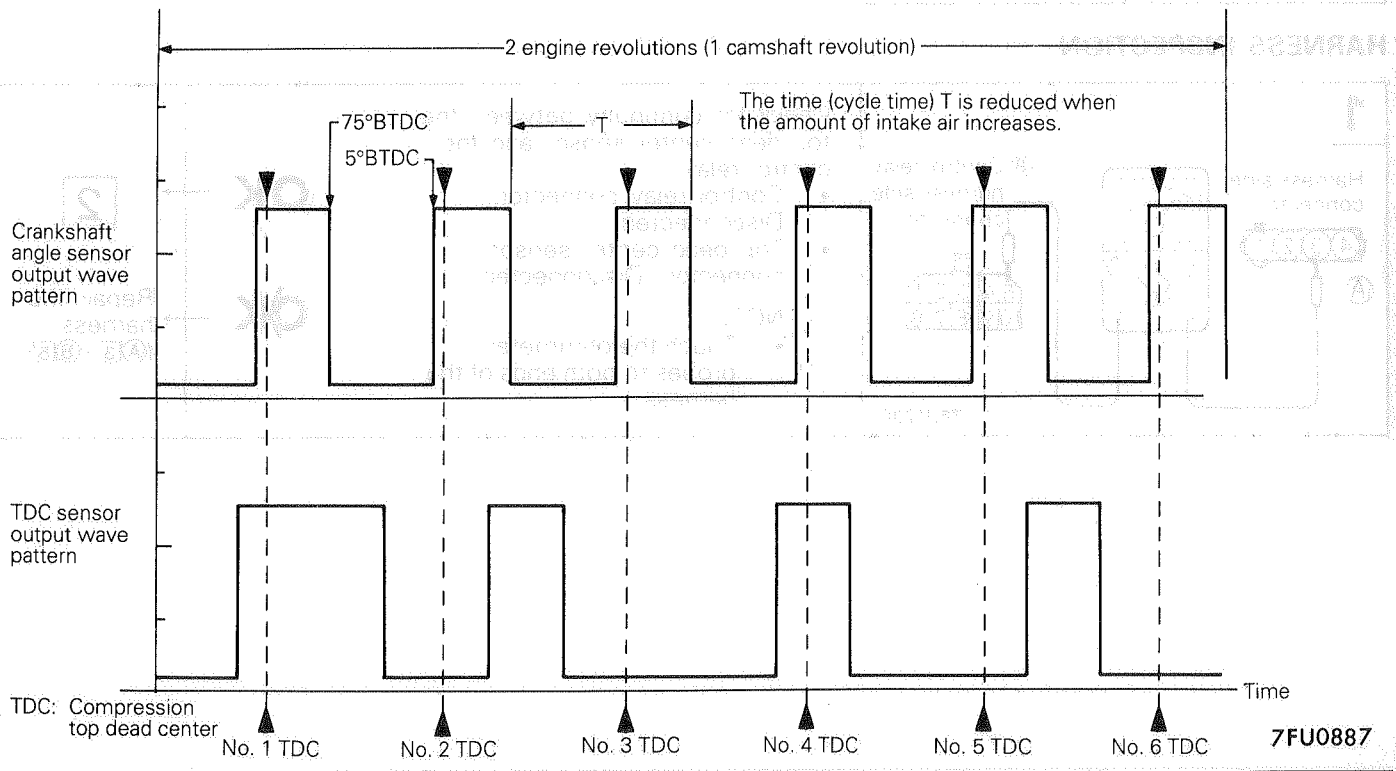

Wave pattern observation points

Check that cycle time T becomes shorter and the frequency increases when the engine speed is increased.

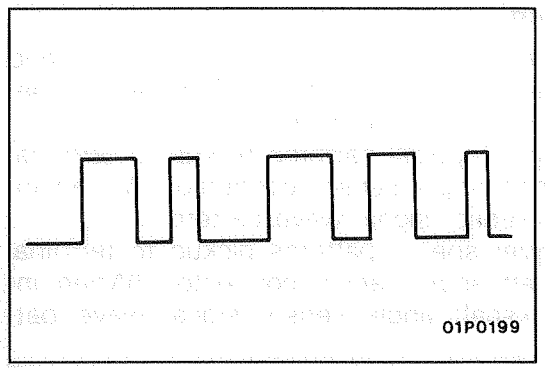

Examples of abnormal wave patterns

- Example 1

  Cause of problem
  Sensor interface malfunction

  Wave pattern characteristics
  Short wave pattern is output even when the engine is not started.

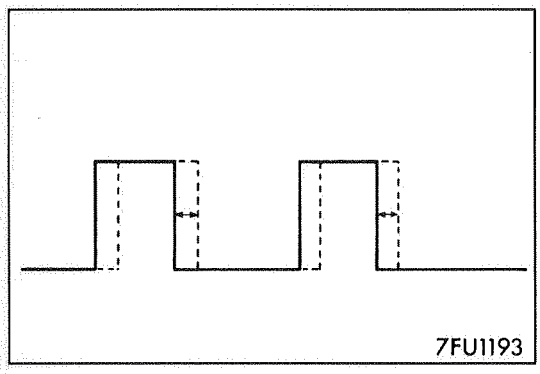

- Example 2

  Cause of problem
  Loose timing belt
  Abnormality in sensor disk

  Wave pattern characteristics
  Wave pattern is displaced to the left or right.

HARNESS INSPECTION

1

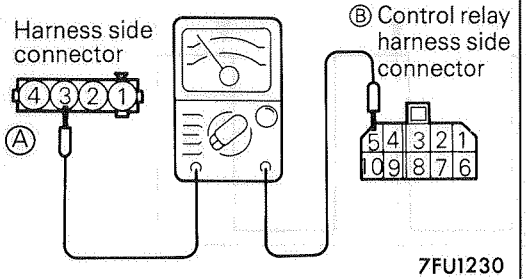

Check for continuity between the top dead center sensor and the control relay.
- Control relay connector: Disconnected
- Top dead center sensor connector: Disconnected

NOTE
- Touch the ohmmeter probes to both ends of the harness.

OK → 2

NG → Repair the harness. (Ⓐ3–Ⓑ5)

2

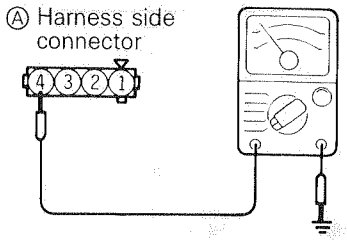

7FU0497

Check for continuity of the ground circuit.

- Top dead center sensor connector: Disconnected

OK → 3

NG → Repair the harness. (Ⓐ4 – Ground)

3

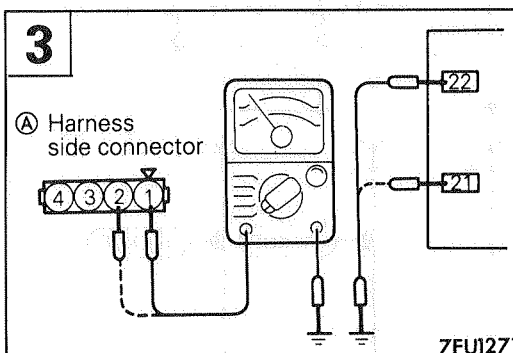

7FU1271

Check for open-circuit or short circuit between the top dead center sensor and the engine control unit.

- Engine control unit connector: Disconnected
- Top dead center sensor connector: Disconnected

OK → 4

NG → Repair the harness. (Ⓐ1 – 22) (Ⓐ2 – 21)

4

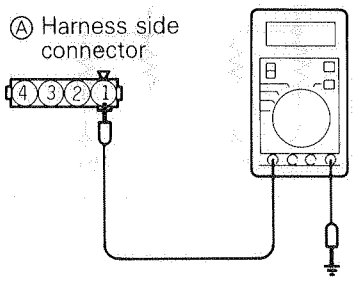

7FU0498

Check the output circuit voltage.

- Top dead center sensor connector: Disconnected
- Engine control unit connector: Connected
- Ignition switch: ON

Voltage (V)
4.8 – 5.2

OK → STOP

NG → Replace the engine control unit

CRANK ANGLE SENSOR

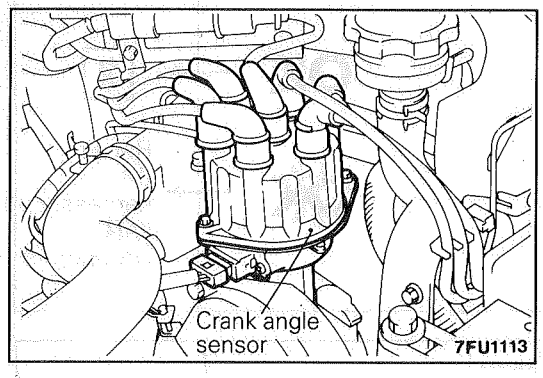

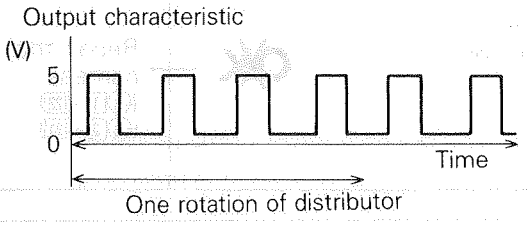

7FU0553

Engine control unit connector

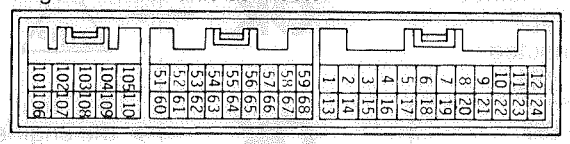

01L0838

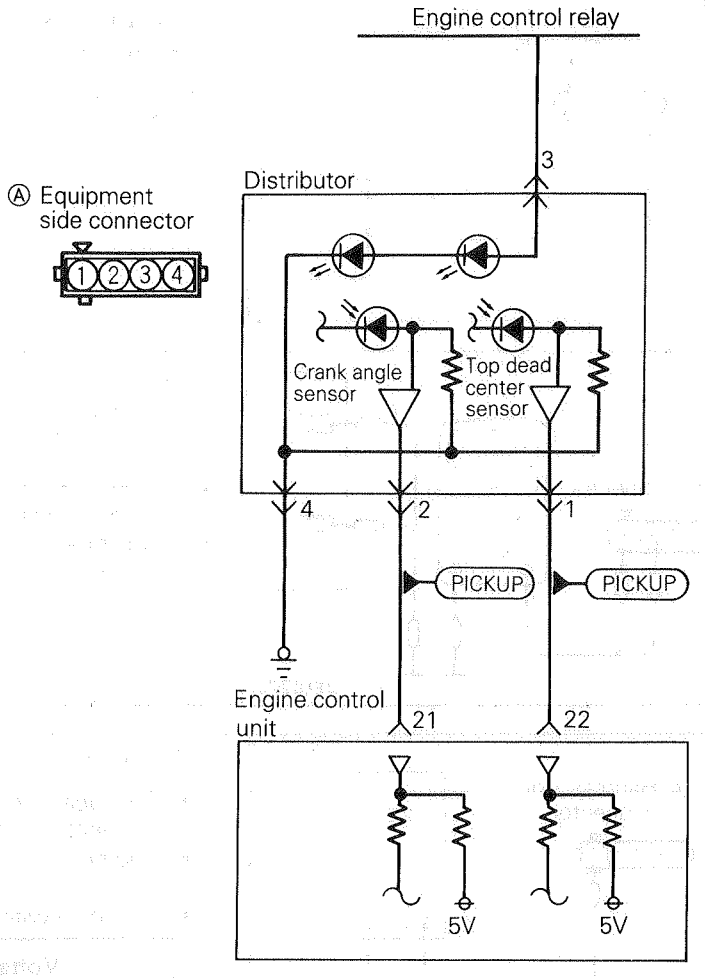

7FU0873

OPERATION

- The crank-angle sensor functions to detect the crank angle (position) of each cylinder, and to convert those data to pulse signals, which are then input to the engine control unit. The engine control unit, based upon those signals, calculates the engine rpm, and also regulates the fuel injection timing and the ignition timing.
- The power for the crank-angle sensor is supplied from the control relay and is grounded to the vehicle body. The crank-angle sensor, by intermitting the flow (to ground) of the 5V voltage applied from the engine control unit, produces pulse signals.

TROUBLESHOOTING HINTS

Hint 1:
If an impact is suddenly felt during driving or the engine suddenly stalls during idling, try shaking the crank-angle sensor during idling. If the engine stalls, the cause may be presumed to be improper or incomplete contact of the crank-angle sensor's connector.
Hint 2:
If the crank-angle sensor output rpm is 0 rpm. during cranking when the engine cannot be started, the cause may be presumed to be a malfunction of the crank-angle sensor or a broken timing belt.
Hint 3:
If the indicated value of the crank-angle sensor output rpm is 0 rpm. during cranking when the engine cannot be started, the cause may be presumed to be a failure of the ignition coil's primary current to intermittently pulse correctly, so a malfunction of the ignition system circuitry, the ignition coil and/or the power transistor is the probable cause.

Hint 4:
If idling is possible even though the crank-angle sensor indicated rpm. is a deviation from the standard value, the cause is usually a malfunction of something other than the crank-angle sensor.

Examples:
(1) Malfunction of the engine coolant-temperature sensor.
(2) Malfunction of the idle-speed control servo.
(3) Improper adjustment of the standard idling speed.

INSPECTION

Using Multi-use tester (MUT)

Function	Item No.	Data display	Check conditions	Check description	Normal condition
Data reading	22	Cranking rpm.	• Engine is being cranked. • Tachometer connected. (The tachometer is used to check the intermittent pulsation of the ignition coil's primary current.)	Compare the cranking rpm and the rpm indicated by the MUT.	Both agree.

Function	Item No.	Data display	Check conditions	Engine coolant temperature °C (°F)	Standard value rpm.
Data reading	22	Idling rpm.	• Engine: Idling • Idle-position switch: ON	When –20 (–4)	1,500–1,700
				When 0 (32)	1,250–1,450
				When 20 (68)	1,050–1,250
				When 40 (104)	850–1,050
				When 80 (176)	600–800

Wave Pattern Inspection Using an Analyzer

Refer to the top dead center sensor section (P.13-56).

HARNESS INSPECTION

1

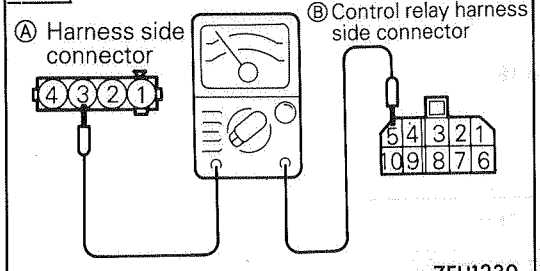

Check for continuity between the crank angle sensor and the control relay.
- Control relay connector: Disconnected
- Crank angle sensor connector: Disconnected

NOTE
- Touch the ohmmeter probles to both ends of the harness.

OK → 2

NG → Repair the harness. (Ⓐ3–Ⓑ5)

2

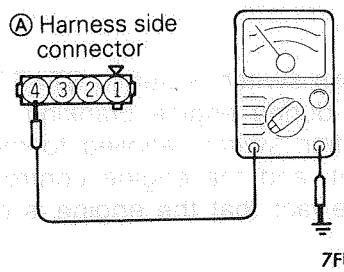

Check for continuity of the ground circuit.
- Crank angle sensor connector: Disconnected

OK → 3

NG → Repair the harness. (Ⓐ4–Ground)

TSB Revision

3

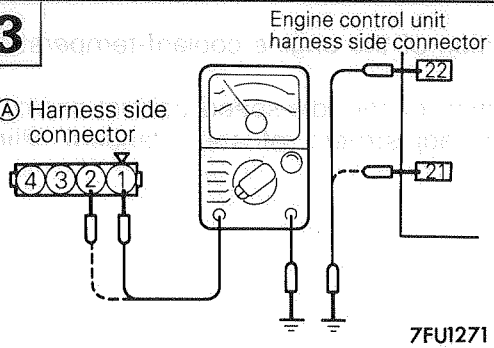

Check for open-circuit or short circuit between the crank angle sensor and the engine control unit.
- Engine control unit connector: Disconnected
- Crank angle sensor connector: Disconnected

OK → 4

NO → Repair the harness. (Ⓐ2 – 21) (Ⓐ1 – 22)

4

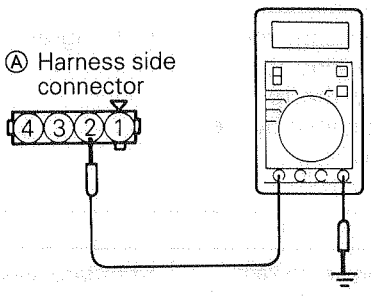

Measure the applied voltage.
- Crank angle sensor connector: Disconnected
- Engine control unit connector: Connected
- Ignition switch: ON

Voltage (V)
4.8–5.2

OK → STOP

NO → Replace the engine control unit.

IGNITION SWITCH-ST [M/T]

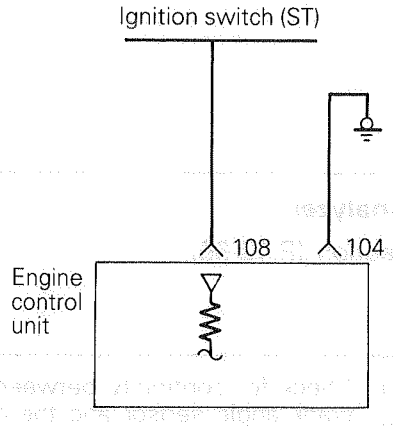

Engine control unit connector

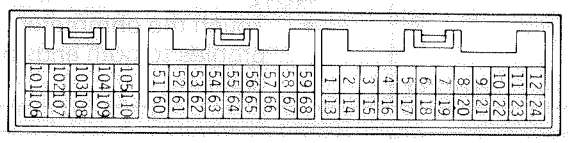

OPERATION

- The ignition switch-ST inputs HIGH-level signals to the engine control unit during engine cranking. The engine control unit, based on those signals, regulates fuel injection during starting, etc.
- When the ignition switch is set to START, the battery voltage during engine cranking is, by way of the ignition switch, applied to the engine control unit, and the engine control unit thus detects the fact that the engine is cranking.

INSPECTION

Using Multi-use tester (MUT)

Function	Item No.	Data display	Check conditions	Engine	Normal display
Data reading	18	Switch status	• Ignition switch: ON	Stopped	OFF
				Cranking	ON

HARNESS INSPECTION

1

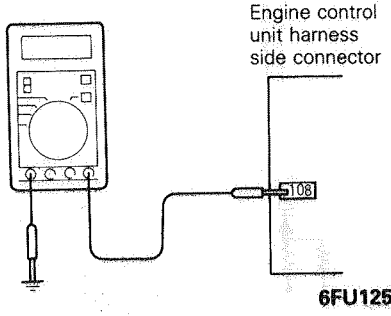

Measure the input voltage to the engine control unit.
- Engine control unit connector: Disconnected
- Ignition switch: START

Voltage (V)
8 or higher

OK → 2

NG → Repair the harness. (108 – Ignition switch)

2

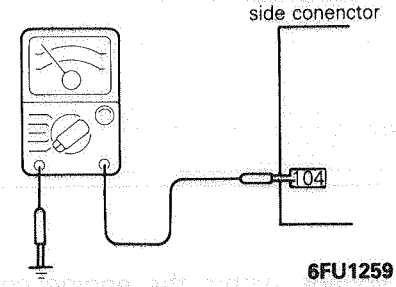

Check for continuity of the ground circuit.
- Engine control unit connector: Disconnected

OK → STOP

NG → Repair the harness (104 – Ground)

IGNITION SWITCH–ST and INHIBITOR SWITCH [A/T]

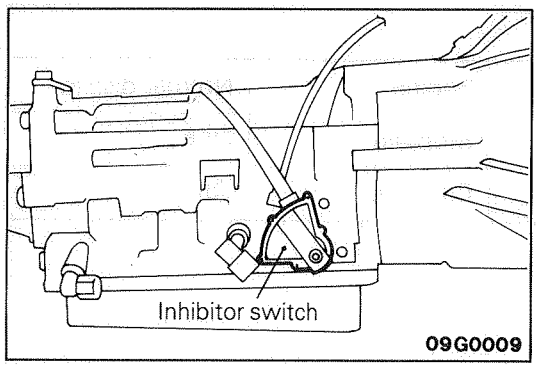

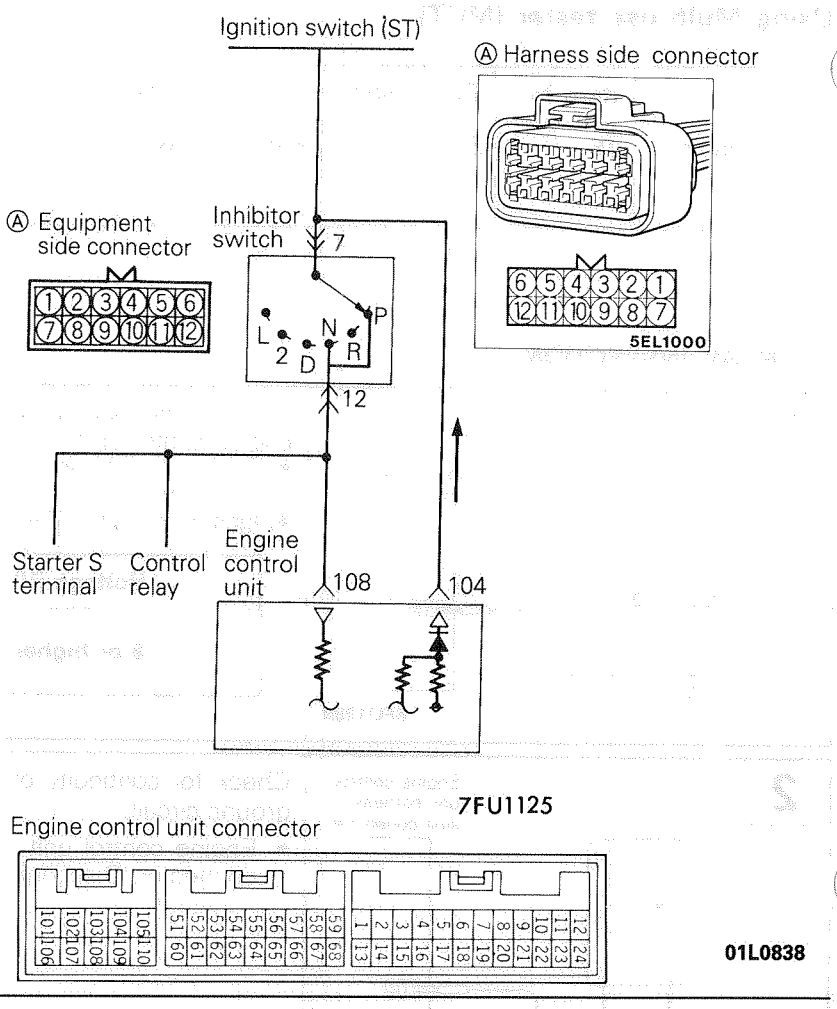

OPERATION

- The ignition switch-ST inputs HIGH-level signals to the engine control unit during engine cranking. The engine control unit, based on those signals, regulates fuel injection during starting, etc.
- When the ignition switch is set to START, the battery voltage during engine cranking is, by way of the ignition switch, and the inhibitor switch, applied to the engine control unit, and the engine control unit thus detects the fact that the engine is cranking. Note that battery voltage is not applied to the engine control unit if the position of the select lever is other than the "P" or "N" range.
- The inhibitor switch functions to convert the voltage to HIGH level or LOW level depending upon whether the select lever is at the "P" or "N" range or is at some position other than the "P" or "N" range, and inputs the result to the engine control unit. the engine control unit, based upon those signals, then regulates the operation of the idle-speed control servo.
- Battery voltage within the engine control unit is applied, by way of the resistance, to the inhibitor switch. When the select lever is set to the "P" or "N" range, contunuity is created, via the starter motor, between the engine control unit's inhibitor switch terminal and ground, and the terminal voltage becomes LOW level.

TROUBLESHOOTING HINTS

If the output of the inhibitor switch is abnormal even though the results of the checking of the inhibitor switch harness and of the component itself are normal, it is probable that the cause is improper adjustment of the control cable.

INSPECTION
Using Multi-use tester (MUT)

Ignition switch – ST

Function	Item No.	Data display	Check conditions	Engine	Normal display
Data reading	18	Switch status	• Ignition switch: ON	Stopped	OFF
				Cranking	ON

Inhibitor switch

Function	Item No.	Data display	Check conditions	Select lever position	Normal display
Data reading	29	Shift position	• Ignition switch: ON	P or N	P or N
				D, 2, L or R	D, 2, L or R

HARNESS INSPECTION

1

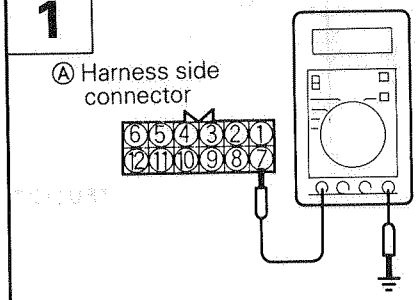

Measure the power supply voltage of the inhibitor switch.
- Engine control unit connector: Disconnected
- Inhibitor switch connector: Disconnected
- Ignition switch: START

Voltage (V)
SV

OK → 2

Check the power supply circuit.

2

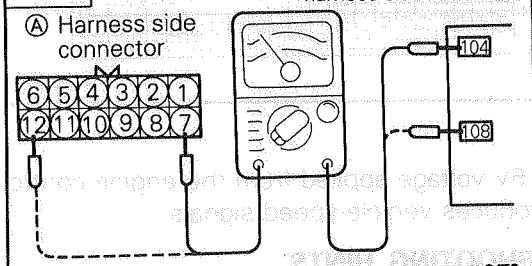

Check for continuity between the inhibitor switch and the engine control unit.
- Engine control unit connector: Disconnected
- Inhibitor switch connector: Disconnected

NOTE
- Touch the ohmmeter probes to both ends of the harness.

OK → 3

Repair the harness.
(Ⓐ 7 – 104)
(Ⓐ 12 – 108)

3

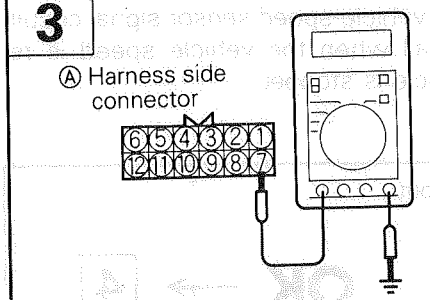

Measure the inhibitor switch terminal input voltage.
- Engine control unit connector: Connected
- Inhibitor switch connector: Disconnected
- Ignition switch: ON

Voltage (V)
SV

OK → STOP

Replace the engine control unit

INHIBITOR SWITCH INSPECTION

Refer to GROUP 23 – Service Adjustment Procedures.

VEHICLE SPEED SENSOR

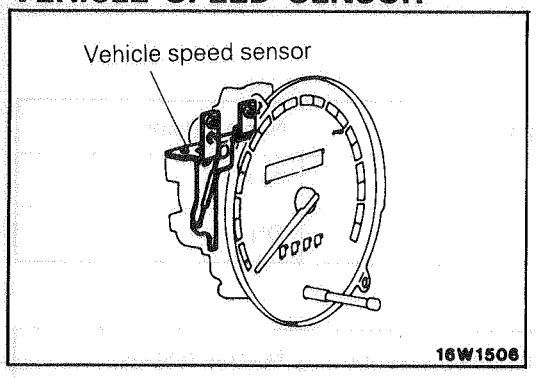

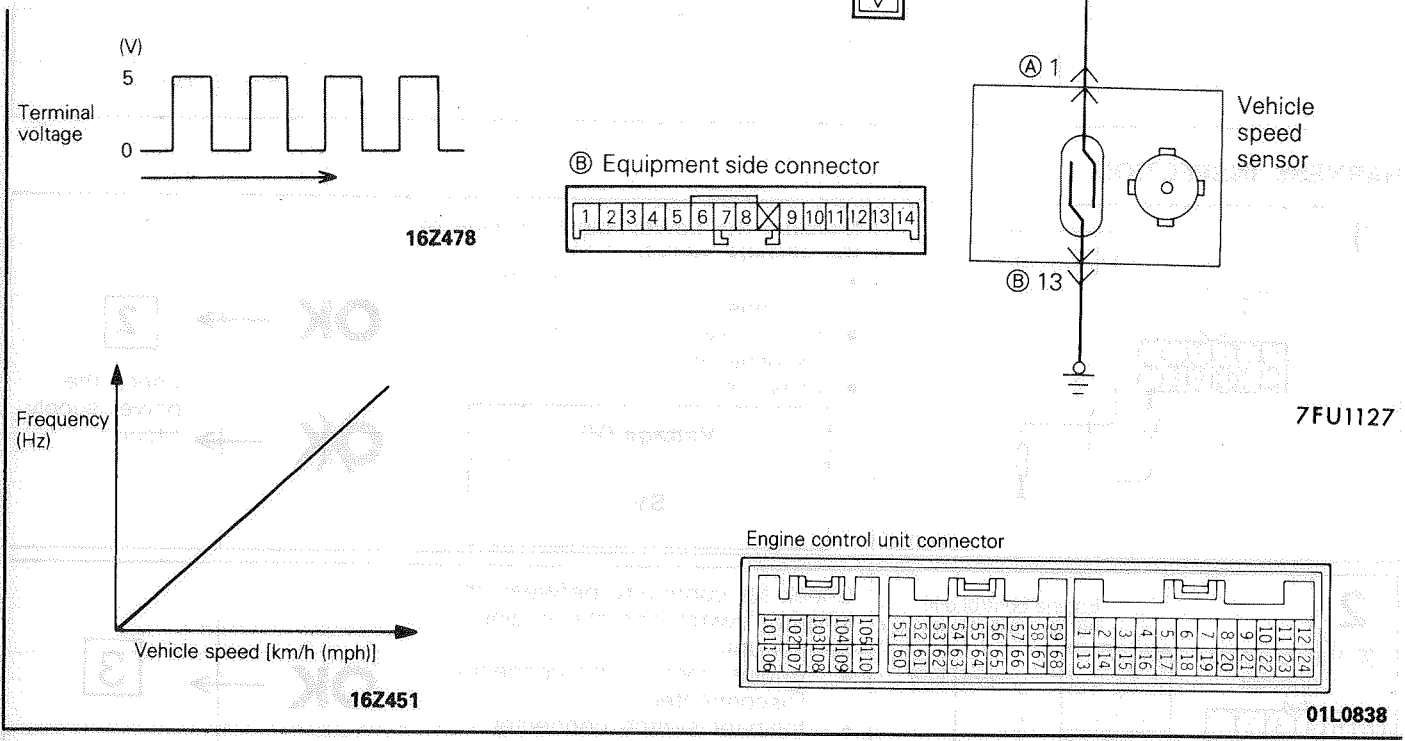

OPERATION

- The vehicle-speed sensor is incorporated within the speedometer; it converts vehicle-speed data to pulse signals and inputs those signals to the engine control unit. The engine control unit, based upon those signals, regulates the idle-speed servo, etc.
- The vehicle-speed sensor, by intermitting by the lead switch the flow (to ground) of the approximately 5V voltage applied from the engine control unit, produces vehicle-speed signals.

TROUBLESHOOTING HINTS

If there is damaged or disconnected wiring, or a short-circuit, of the vehicle-speed sensor signal circuit, the engine may stall when the vehicle speed is reduced and the vehicle is stopped.

HARNESS INSPECTION

1

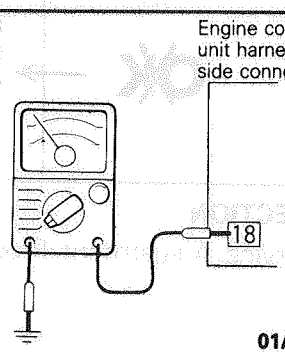

Check the vehicle speed sensor output circuit for continuity.
- Engine control unit connector: Disconnected.
- Move the vehicle.

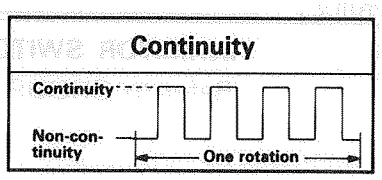

OK → 4

NG → 2

TSB Revision

2

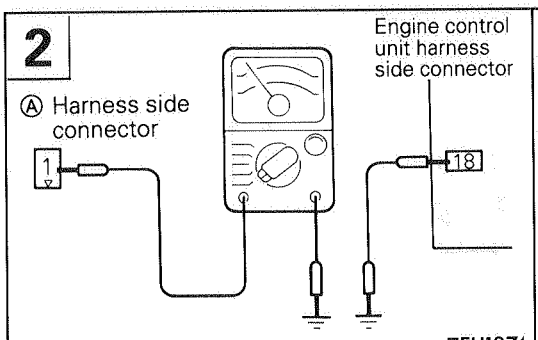

Check for open-circuit or short circuit between the vehicle speed sensor and the engine control unit.
- Engine control unit connector: Disconnected
- Vehicle speed sensor connector: Disconnected

OK → 3

NG → Repair the harness. (Ⓐ1–18)

3

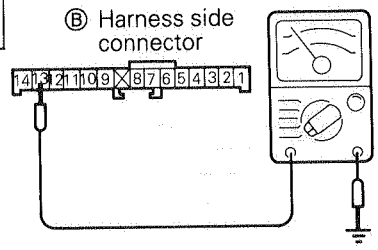

Check for continuity of the ground circuit.
- Vehicle speed sensor connector: Disconnected

OK → 4

NG → Repair the harness. (Ⓑ13–Ground)

4

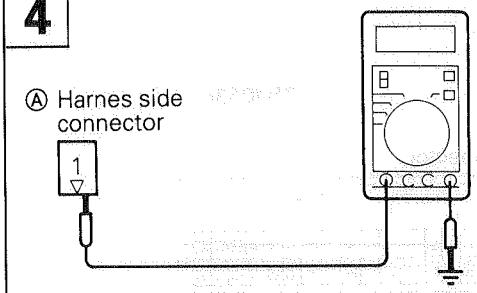

Measure the applied voltage.
- Vehicle speed sensor connector: Disconnected
- Engine control unit connector: Connected
- Ignition switch: ON

Voltage (V)
4.5–4.9

OK → STOP

NG → Replace the engine control unit.

SENSOR INSPECTION

Refer to GROUP 54 – Meters and Gages

POWER STEERING FLUID PRESSURE SWITCH

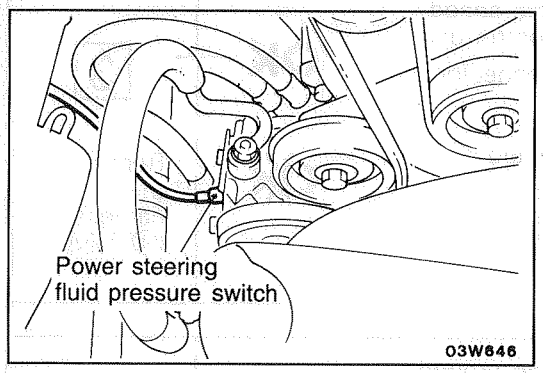

OPERATION

- The power steering fluid pressure switch converts presence/absence of power steering load into low/high voltage and inputs it to the engine control unit, which then controls the idle speed control servo based on this signal.
- The battery voltage in the engine control unit is applied through a resistor to the power steering fluid pressure switch. Steering operation causes the power steering fluid pressure to increase, turning the switch on. As a result, continuity is produced between the battery voltage applied and ground. This causes the power steering fluid pressure terminal voltage to go from high to low.

INSPECTION

Using Multi-use Tester (MUT)

Function	Item No.	Data display	Check condition	Steering wheel	Normal display
Data reading	27	Switch state	Engine: Idling	Steering wheel neutral position (wheels straight-ahead direction)	OFF
				Steering wheel half turn	ON

Checking Fluid Pressure

Steering wheel	Oil pump delivery pressure (ref. value)
Straight forward	700–1,200 kPa (100–171 psi)
Turned	1,500–2,000 kPa (213–284 psi)

HARNESS INSPECTION

1

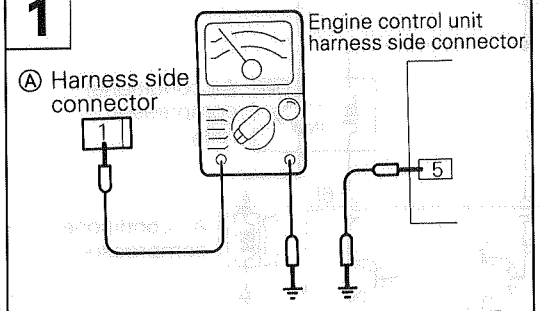

Check for open-circuit or short circuit between the power steering fluid pressure switch and the engine control unit.

OK → 2

NG → Repair the harness. (Ⓐ1–5)

2

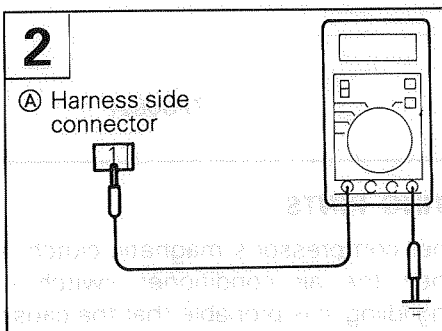

Measure the applied voltage.

- Power steering fluid pressure switch connector: Disconnected
- Engine control unit connector: Connected
- Ignition switch: ON

Voltage (V)
5V

OK → STOP

NG → Replace the engine control unit.

SENSOR INSPECTION

Refer to GROUP 37 – Service Adjustment Procedures.

AIR CONDITIONER SWITCH AND POWER RELAY

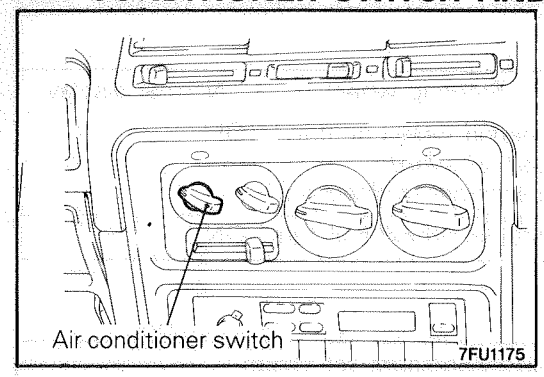

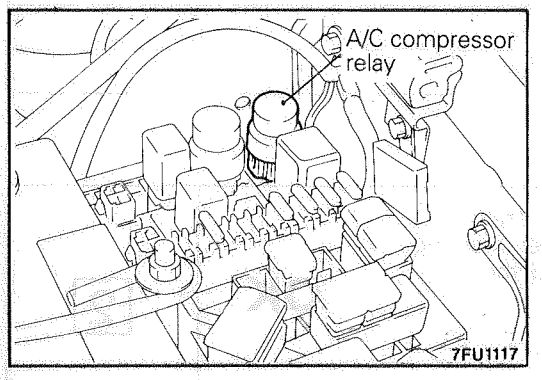

Engine control unit connector

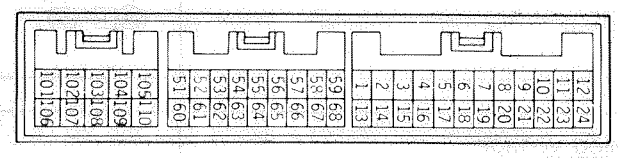

01L0838

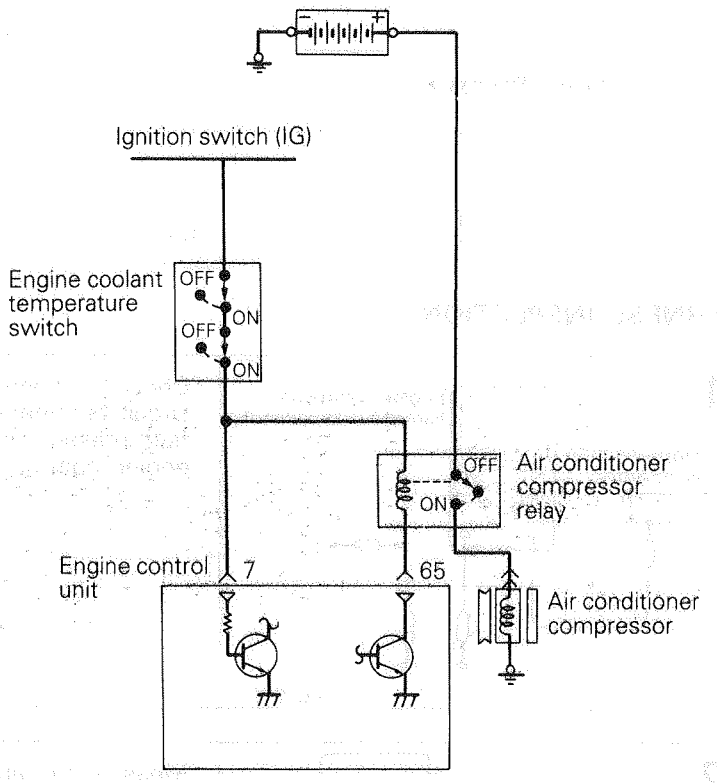

7FU0821

OPERATION

- The air conditioner switch applies battery voltage to the engine control unit when the air conditioner is switched ON.
- When the air conditioner signals are input, the engine control unit activates the idle-speed control servo, and also switches ON the power transistor. As a result, current flows to the power relay coil and the relay switch is switched ON; the air conditioner compressor's magnetic clutch is activated.

TROUBLESHOOTING HINTS

If the air conditioner compressor's magnetic clutch is not activated when the air conditioner switch is switched ON during idling, it is probable that the cause is a malfunction of the air conditioner control system.

INSPECTION

Using Multi-use tester (MUT)
Air conditioner switch

Function	Item No.	Data display	Check conditions	Air conditioner switch	Normal display
Data reading	28	Switch status	• Engine idling (The air conditioner compressor should be activated when the air conditioner switch is switched ON.)	OFF	OFF
				ON	ON

Air conditioner power relay

Function	Item No.	Data display	Check conditions	Air conditioner switch	Normal display
Data reading	49	Air conditioner power relay status	• Engine: Idling after warm up	OFF	OFF (Compressor clutch non-activation)
				ON	ON (Compressor clutch activation)

HARNESS INSPECTION

1

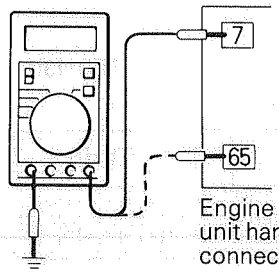

Engine control unit harness side connector

01R0863

Measure the power supply voltage of the air conditioner circuit.
- Engine control unit connector: Disconnect
- Ignition switch: ON
- Air conditioner switch: ON

Voltage (V)
6 or higher

OK → STOP

NG → Check the air conditioner circuit.

AIR CONDITIONER INSPECTION

Refer to GROUP 55 – Service Adjustment Procedures.

OXYGEN SENSOR

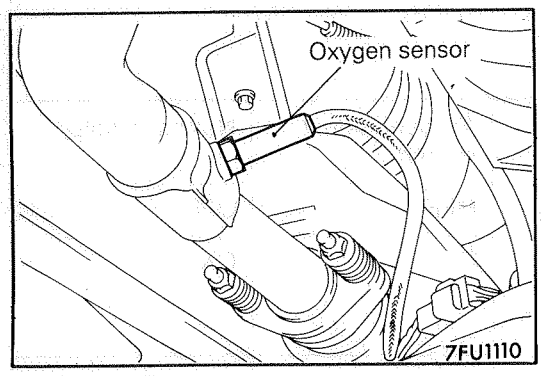

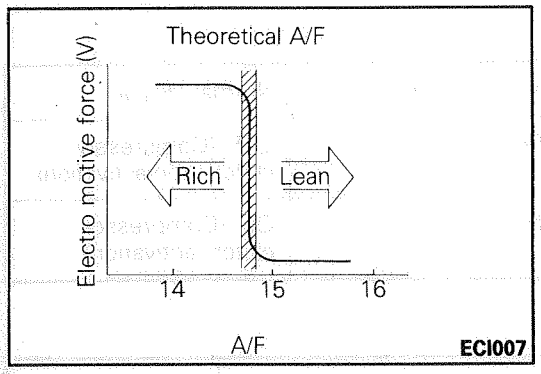

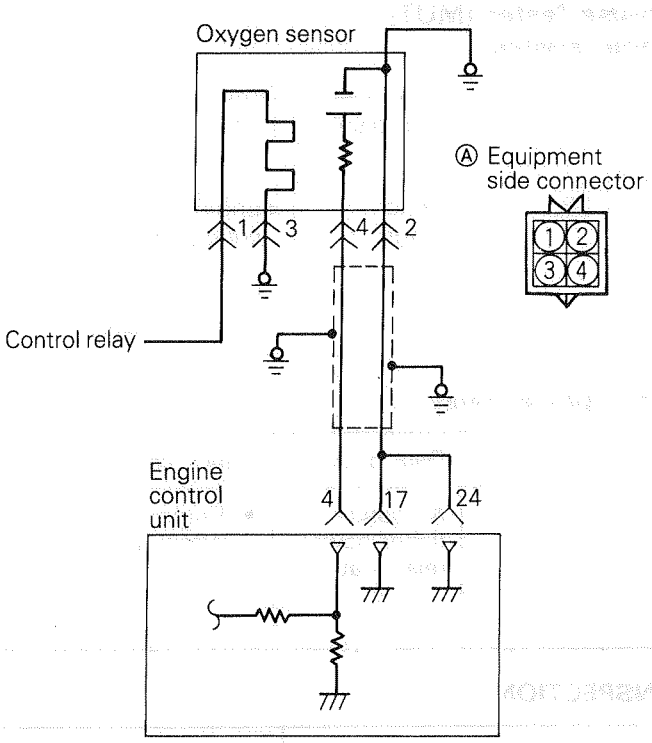

Engine control unit connector

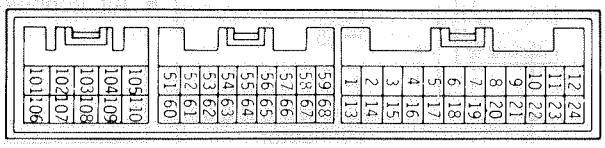

01L0838

OPERATION

- The oxygen sensor functions to detect the concentration of oxygen in the exhaust gas; it converts those data to voltage, and inputs the resulting signals to the engine control unit.
- If the air/fuel mixture ratio is richer than the theoretical air/fuel mixture ratio (i.e., if the concentration of oxygen in the exhaust gas is sparse), a voltage of approximately 1V is output; if the air/fuel mixture ratio in leaner than the theoretical air/fuel mixture ratio (i.e., if the concentration is dense), a voltage of approximately 0V is output.
- The engine control unit, based upon those signals, regulates the amount of fuel injection so that the air/fuel mixture ratio becomes the theoretical air-/fuel mixture ratio.
- Battery power supply is applied, by way of the control relay, to the oxygen sensor heater. As a result, the sensor element is heated by the heater, so that the oxygen sensor shows excellent response even if the temperature of the exhaust gas is low.

TROUBLESHOOTING HINTS

Hint 1:
The exhaust gas purification performance will worsen if there is a malfunction of the oxygen sensor.
Hint 2:
If the oxygen sensor output voltage deviates from the standard value even though the results of the checking of the oxygen sensor are normal, the cause is probably a malfunction of a component related to air/fuel mixture ratio control.

[Examples]
(1) Malfunction of an injector.
(2) Air leakage into the intake manifold from a leaking gasket.
(3) Malfunction of the air-flow sensor, the intake air temperature sensor, the barometric-pressure sensor, or the engine coolant temperature sensor.

INSPECTION

Using Multi-use tester (MUT)

Function	Item No.	Data display	Check conditions	Engine condition rpm.	Standard value mV
Data reading	11	Sensor detection voltage	• Engine: Warm-up (Make the mixture lean by engine speed reducion, and rich by racing.)	When sudden deceleration from 4,000	200 or lower
				When engine is suddenly raced	600–1,000
			• Engine: Warm-up using the oxygen sensor signal, check the air/fuel mixture ratio, and also check the condition of control by the engine control unit	700 (Idling)	400 or lower ↕ (changes) 600–1,000
				2,000	

HARNESS INSPECTION

1

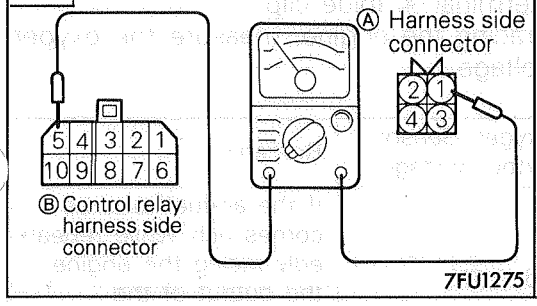

Check for continuity between the oxygen sensor and the control relay.
- Control relay connector: Disconnected
- Oxygen sensor connector: Disconnected

NOTE
- Touch the ohmmeter probes to both ends of the harness.

OK → 2

NO → Repair the harness. (Ⓐ1–Ⓑ5)

2

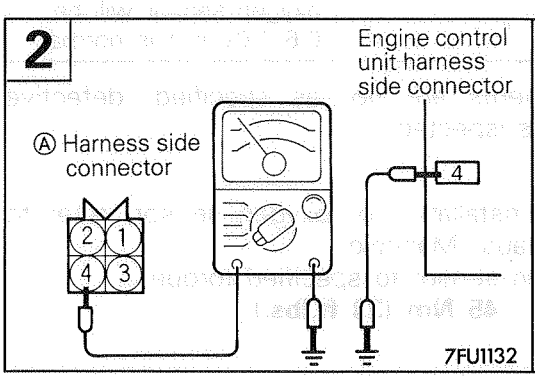

Check for an open-circuit, or a short-circuit to ground, between the engine control unit and the oxygen sensor.
- Oxygen sensor connector: Disconnected
- Engine control unit connector: Disconnected

OK → 3

NO → Repair the harness. (Ⓐ4–4)

3

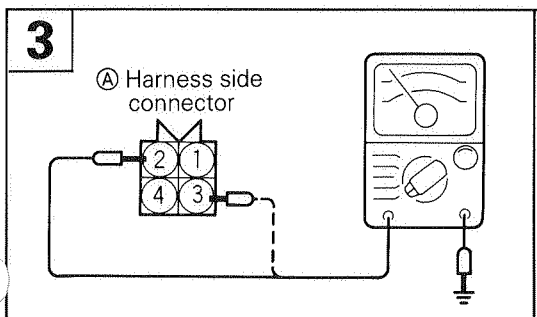

Check for continuity of the ground circuit.
- Oxygen sensor connector: Disconnected
- Engine control unit connector: Disconnected

OK → STOP

NO → Repair the harness. (Ⓐ2–17, 24) (Ⓐ3–Ground)

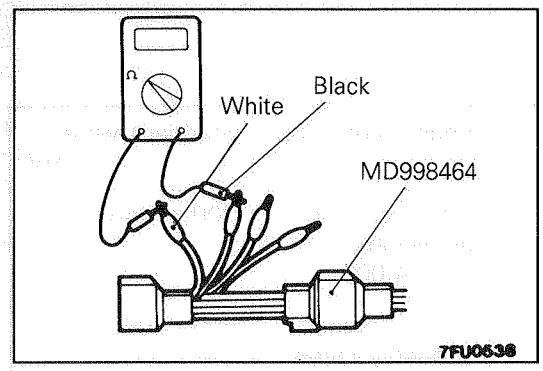

SENSOR INSPECTION

(1) Disconnect the connector to the oxygen sensor, then use the special tool (test harness) to make connections with the connection on the oxygen sensor side.
(2) Check if there is continuity between terminal ① (black clip of the special tool) and terminal ③ (white clip) of the oxygen sensor connector [approx. 20Ω at a temperature of 20°C (68°F)].
(3) If there is no continuity, replace the oxygen sensor.

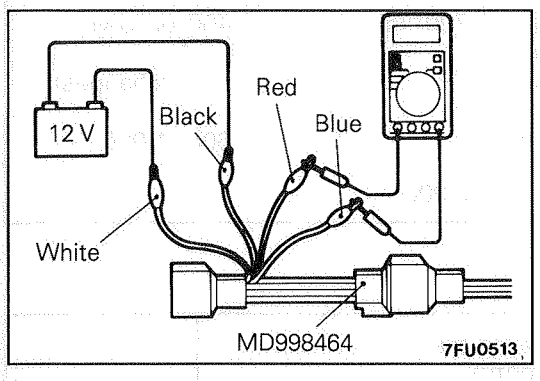

(4) Warm up the engine until the coolant temperature is 80°C (176°F) or higher.
(5) Using jumper wires, connect terminal ① (black clip of the special tool) and terminal ③ (white clip) of the oxygen sensor with the ⊕ terminal and ⊖ terminal on the battery, respectively.

CAUTION
When connecting the jumper wires, be careful not to connect them to the wrong terminals, since this could damage the oxygen sensor.

(6) Connect a digital voltmeter to terminal ② (red clip of the special tool) and terminal ④ (blue clip).
(7) While repeatedly racing the engine, measure the oxygen sensor's output voltage.

Engine	Oxygen Sensor Output Voltage	Remarks
During racing	0.6–1.0V	If the air-fuel ratio becomes rich while repeatedly racing the engine, the output of the oxygen sensor will be 0.6–1.0V if it is normal.

(8) If the measurements are not as specified, defective oxygen sensor is suspected.

INSTALLATION

(1) For removal and installation of oxygen sensor, refer to GROUP 15 – Exhaust Manifold.
(2) Tighten the oxygen sensor to specified torque.
Specified torque: 45 Nm (33 ft.lbs.)

INJECTORS

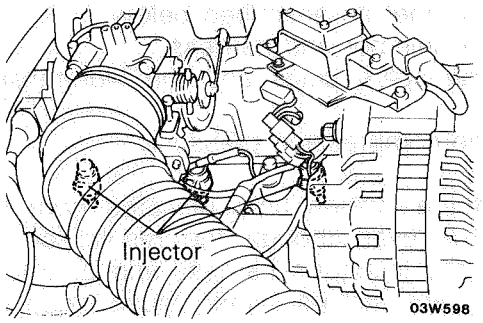

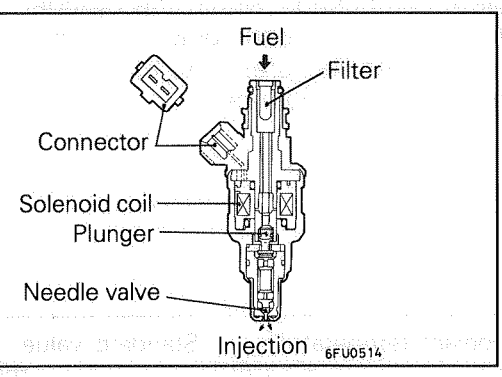

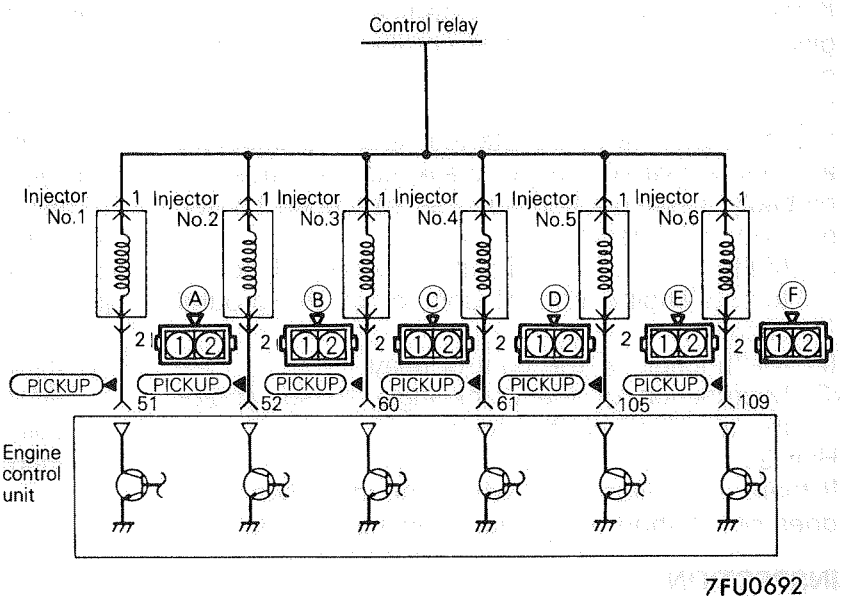

Engine control unit connector

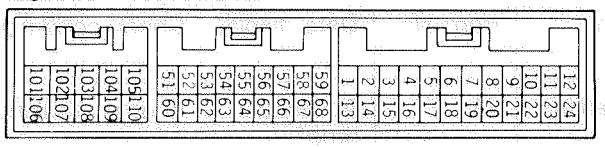

01L0838

OPERATION

- The injector is an injection nozzle with a solenoid valve which injects fuel according to the injection signal coming from the engine control unit.
- The injector has a fixed nozzle opening area and the fuel pressure against manifold inside pressure is regulated to a fixed level. Therefore, the volume of fuel injected by the injector is determined by the time during which the needle valve is open, namely, by the time during which the solenoid coil is energized.
- The battery voltage is applied through the control relay to this injector. When the engine control unit turns on the power transistor in the unit, the solenoid coil is energized to open the injector valve, which then injects fuel.

TROUBLESHOOTING HINTS

Hint 1:
If there is a problem with starting while the engine is warm, perform the combustion test and check for leakage of the injectors.
Hint 2:
If the engine can't be started, and the injectors are not activated during cranking, the cause is probably a malfunction such as described below, not with the injectors.
(1) Malfunction of the circuit for supply of power to the engine control unit, or of the ground circuit.
(2) Malfunction of the control relay.
(3) Malfunction of the crank-angle sensor and/or the top dead center sensor.
Hint 3:
If there is a cylinder for which the idling condition does not change when, during idling, the fuel injection of the injectors is cut off in sequence, check that cylinder as described below.
(1) Check the injector and harness.
(2) Check the spark plugs and the high-tension cable.
(3) Check the compression pressure.
Hint 4:
If the injector activation time deviates from the standard value even though the results of the checking of the injector's harness and of the injector itself are normal, the cause may be presumed to be one of the following.
(1) Incomplete combustion within the cylinder. (Malfunction of the spark plugs, the ignition coil, the compression pressure, etc.)
(2) Increased engine resistance.

INSPECTION

Using Multi-use tester (MUT)

Function	Item No.	Data display	Check conditions	Engine coolant temperature C° (°F)	Standard value ms
Data reading	41	Activation time*1	Engine cranking	When 0 (32)*2	Approx. 14
				When 20 (68)	Approx. 40
				When 80 (176)	Approx. 9

Function	Item No.	Data display	Check conditions	Engine condition rpm.	Standard value ms
Data reading	41	Activation time*3	• Engine coolant temp: 85–95°C (185–203°F) • Lights and accessories: OFF • Transmission: neutral (P range for vehicles with A/T) • Steering wheel: neutral position	700 (Idling) rpm.	2.4–3.6
				2,000	2.3–3.5
				When raced suddenly	Increases.

NOTE
*1: Indicates the injector-activation time when the power source voltage is 11V and the cranking speed is 250 rpm or less.
*2: At a coolant temperature of 0°C (32°F), there is synchromous injection for all six cylinders.
*3: For a new vehicle [driven approximately 500 km (300 miles) or less] the injector-activation may be about ten percent linger then indicated above.

Function	Item No.	Drive content	Check condition	Normal condition
Actuator test	01	No. 1 injector shut off	Engine: Idling after warm-up (Shut off the injectors in sequence during after engine warm-up, check the idling condition)	Idle state to change further (becoming less stable or stalling)
	02	No. 2 injector shut off		
	03	No. 3 injector shut off		
	04	No. 4 injector shut off		
	05	No. 5 injector shut off		
	06	No. 6 injector shut off		

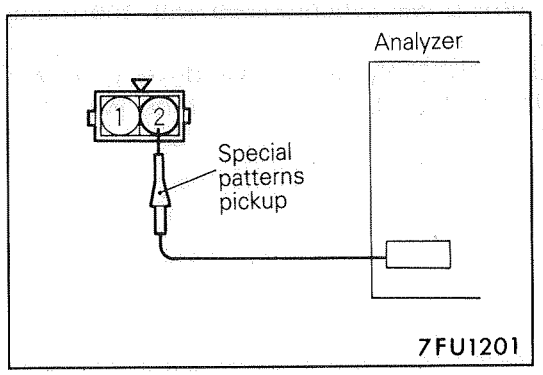

Wave Pattern Inspection Using an Analyzer

(1) Disconnect the injector connector, and connect the special tool (test harness: MB991348) in between. (The power side and the engine control unit side terminals should both be connected.)
(2) Connect the analyzer special patterns pickup to the engine control unit test harness clip.

Standard wave pattern

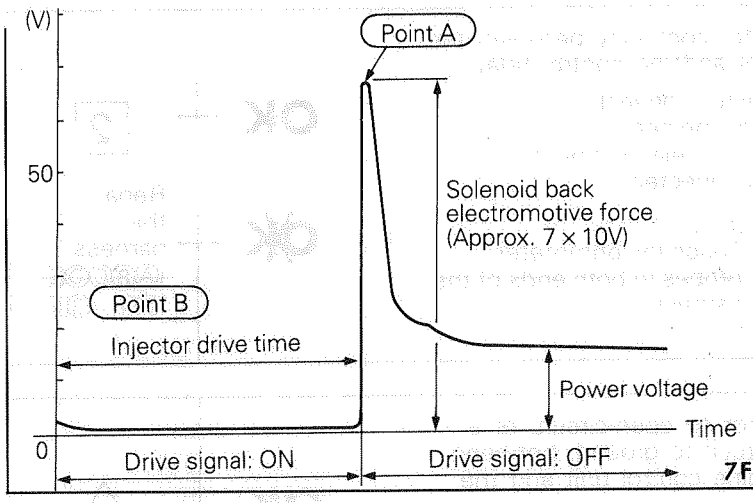

Observation conditions

Function	Special patterns
Pattern height	Variable
Variable knob Pattern selector	Display
Engine rpm.	Idle rpm. (700 rpm.)

Wave pattern observation points

(Point A): Height of back electromotive force in the solenoid coil

Contrast with standard wave pattern	Probable cause
Solenoid coil back electromotive force is low or doesn't appear at all.	Short in the injector solenoid

(Point B): Injector drive time

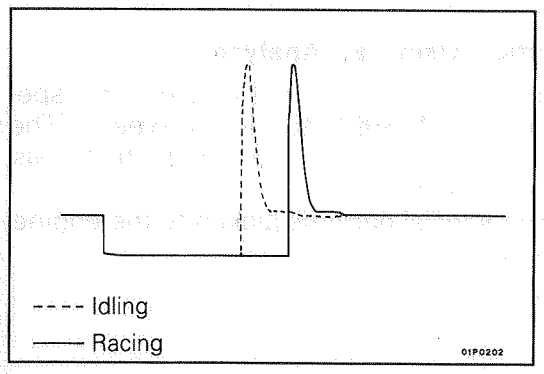

- The injector drive timing will synchronized with the multi-use tester display.
- When the engine is suddenly raced, the drive time will be greatly extended at first, but the drive time will soon match the engine speed.

HARNESS INSPECTION

1

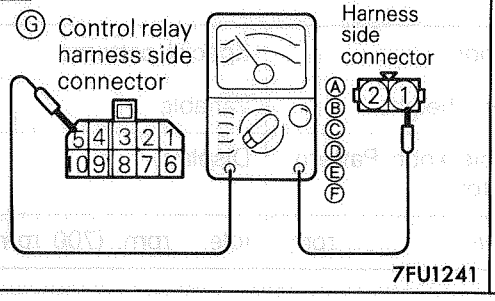

Check for continuity between the injectors and the control relay.
- Injector connector: Disconnected
- Control relay connector: Disconnected

NOTE
- Touch the ohmmeter probes to both ends of the harness.

OK → 2

NO → Repair the harness. (ⒶⒷⒸⒹⒺ Ⓕ1 – Ⓖ5)

2

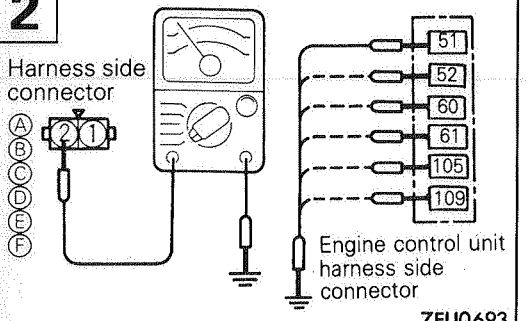

Check for an open-circuit, or a short-circuit to ground, between the engine control unit and the injector.
- Engine control unit connector: Disconnected
- Injector connector: Disconnected

OK → STOP

NO → Repair the harness. (ⒶⒷⒸⒹⒺⒻ 2 – 51 52 60 61 105 109)

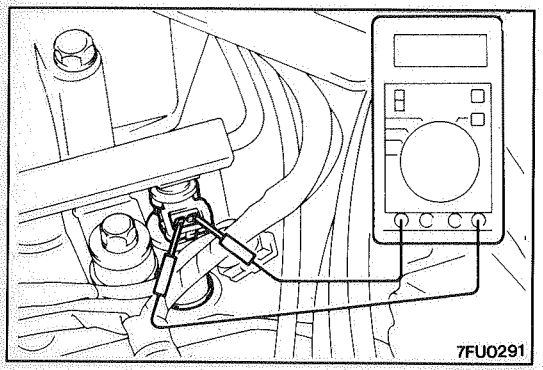

ACTUATOR INSPECTION

Measuring Resistance Between Terminals

(1) Disconnect the connector for the injectors.
(2) Measure the resistance between terminals.
Standard value: 13–16 Ω at 20°C (68°F)
(3) Connect the connector for the injectors.

IDLE SPEED CONTROL SERVO (STEPPER MOTOR)

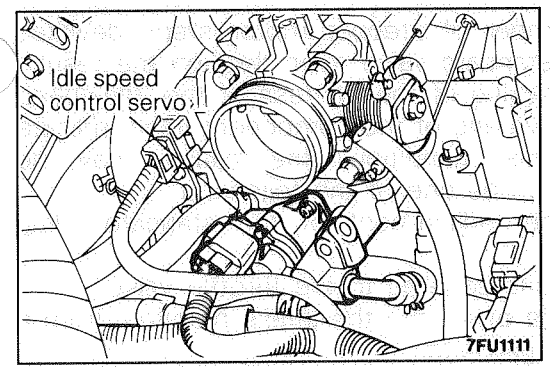

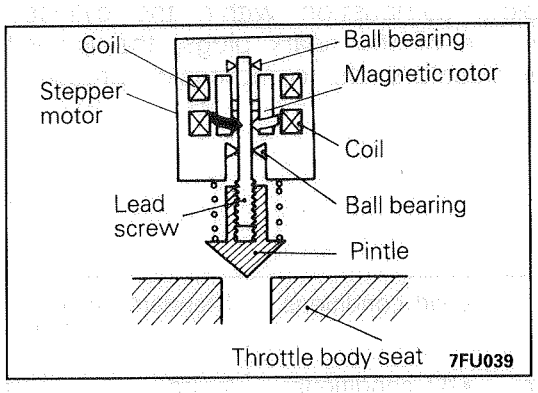

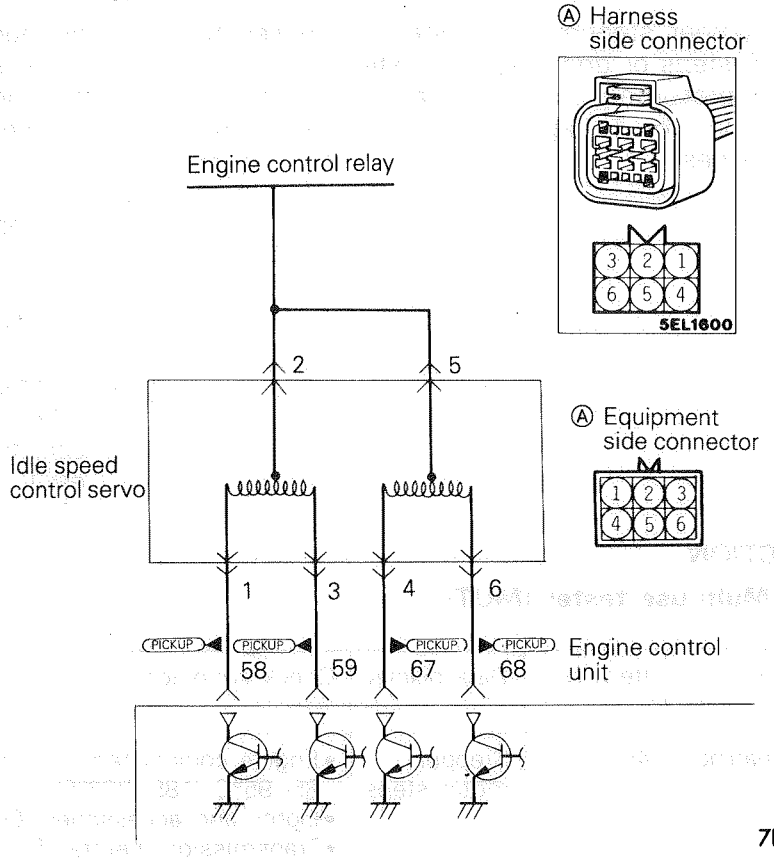

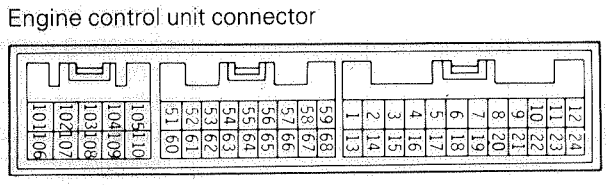

OPERATION

- The amount of air taken in during idling is regulated by the opening and closing of the servo valve located in the air passage that that bypasses the throttle valve.
- The servo valve is opened or closed by the activation of the stepper motor (incorporated within the idle-speed control servo) in the forward or reverse direction.
- Battery power supply is supplied, by way of the control relay, to the coil of the stepper motor. The engine control unit switches ON the power transistors (located within the engine control unit) in sequential order, and, when current flows to the stepper motor coil, the stepper motor is activated in the forward or reverse direction.

TROUBLESHOOTING HINTS

Hint 1:
If the number stepper motor steps increases to 100–120 steps or decreases to 0 step, the cause may be presumed to be a malfunction of the stepper moto or damaged or disconnected wiring of the harness.

Hint 2:
If the number of stepper motor steps deviates from the standard value even through the results of the checking of the harness of the idle-speed control servo and of the component itself indicate no abnormal condition, the cause may be presumed to be one of the following.
(1) Improper adjustment of the standard idling speed.
(2) Depossits adhered to the throttle valve.
(3) Leakage of air into the intake manifold from a gasket gap, etc.
(4) Incomplete combustion within the cylinder. (Malfunction of the spark plugs, the ignition coil, the injectors, the compression pressure, etc.)

INSPECTION

Using Multi-use tester (MUT)

Function	Item No.	Data display	Check conditions	Load conditions	Standard value STEP
Data reading	45	Stepper motor steps	• Engine coolant temperature: 85–95°C (185–203°F) • Lights and accessories: OFF • Transmission: neutral (P range for vehicles with A/T) • Steering wheel: neutral position • Idle-position switch: ON (The compressor clutch should be actived when the air conditioner switch is switched ON.) • Engine: Idling	• Air conditioner switch: OFF	2–25
				• Air conditioner switch: OFF → ON	Increase by 10–70
				• Air conditioner switch: OFF • Selector lever: N → Drange	Increase by 5–50

NOTE
When the vehicle is new [driven approximately 500 km (300 miles) or less] the number of steps may be about 30 steps greater than the standard value indicated above.

Caution
When the select lever is shifted to the "D" range, the brakes must be used to prevent the vehicle from moving forward.

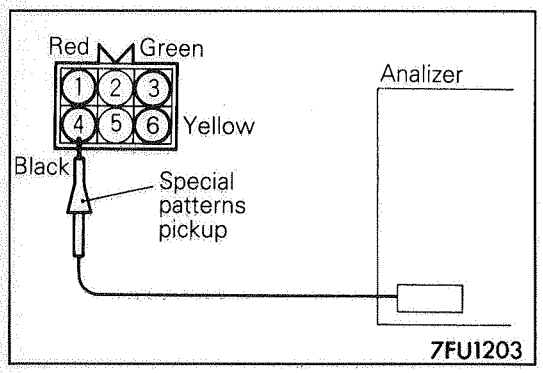

Wave Pattern Inspection Using an Analyzer

Observation method
(1) Disconnect the stepper motor connector, and connect the special tool (test harness: MB998463) in between.
(2) Connect the analyzer special patterns pickup to the stepper motor-side connector terminal ① (red clip on the special tool), terminal ③ (green clip), terminal ④ (black clip) and terminal ⑥ (yellow clip) respectively.

Standard wave pattern

Observation conditions

Function	Special patterns
Pattern height	High
Pattern selector	Display
Engine condition	Turn the ignition switch from OFF to ON (without starting the engine).
	While the engine is idling, turn the air conditioner switch to ON.
	Immediately after starting the warm engine (approx. 1 minute).

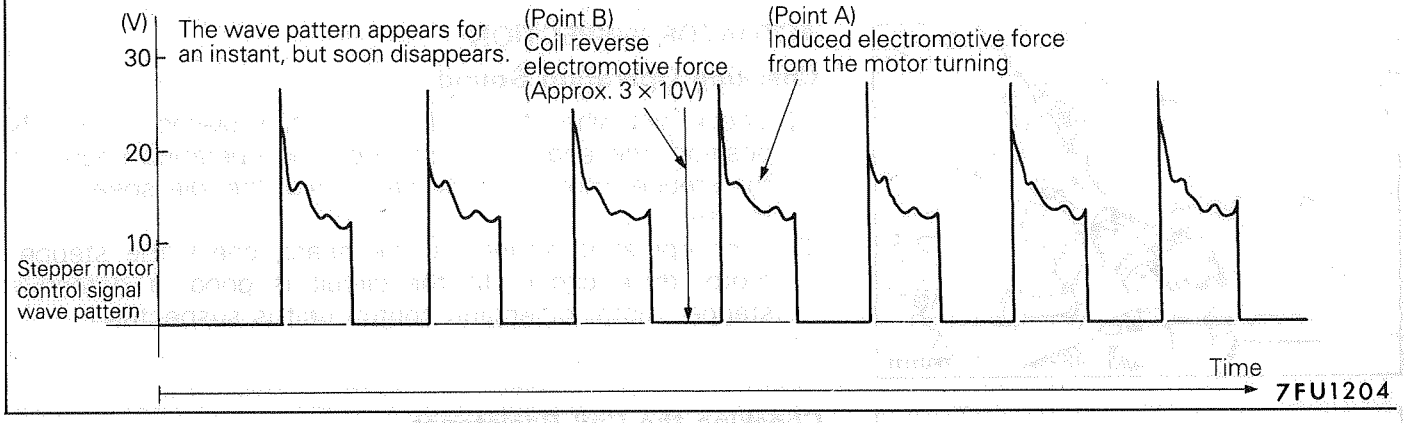

Wave pattern observation points

Check that the standard wave pattern appears when the stepper motor is operating.

(Point A:) Presence or absence of induced electromotive force from the motor turning. (Refer to the abnormal wave pattern.)

Contrast with standard wave pattern	Probable cause
Induced electromotive force does not appear or is extremely small.	Motor is malfunctioning

(Point B:) Height of coil reverse electromotive force

Contrast with standard wave pattern	Probable cause
Coil reverse electromotive force does not appear or is extremely small.	Short in the coil

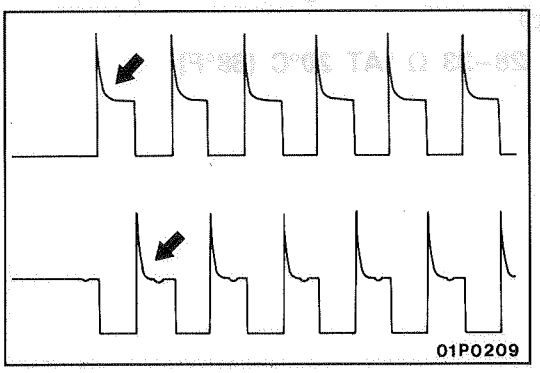

Abnormal wave pattern

Cause of problem

Motor is malfunctioning. (Motor is not operating.)

Wave pattern characteristics

Induced electromotive force from the motor turning does not appear.

HARNESS INSPECTION

1

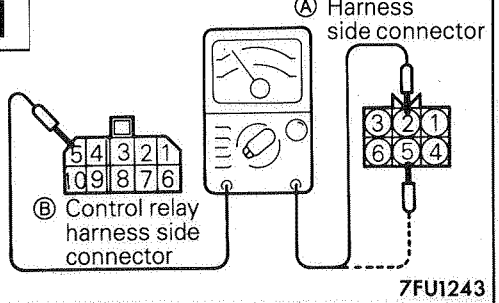

Check for continuity between the idle speed control servo and the control relay.

- Idle speed control servo connector: Disconnected
- Control relay connector: Disconnected

NOTE

- Touch the ohmmeter probes to both ends of the harness.

OK → 2

NO → Repair the harness. (Ⓐ 2 5 – Ⓑ 5)

2

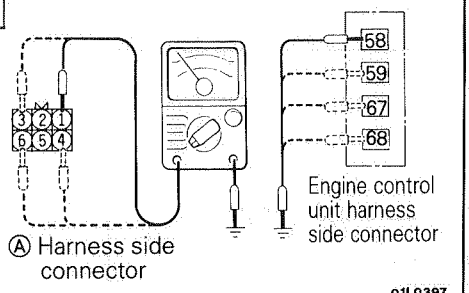

Check for an open-circuit, or a short-circuit to ground, between the engine control unit and idle speed control servo.

- Engine control unit connector: Disconnected
- Idle speed control servo connector: Disconnected

OK → STOP

OK → Repair then harness. (Ⓐ1–58, Ⓐ3–59, Ⓐ4–67, Ⓐ6–68)

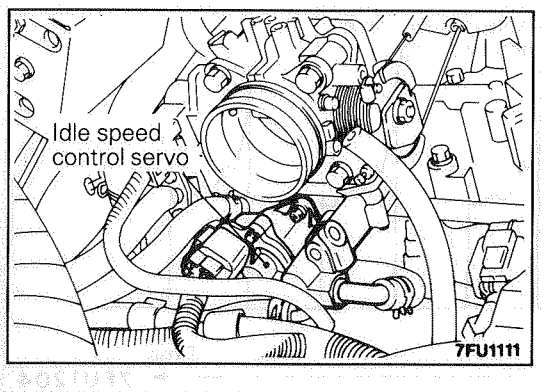

ACTUATOR INSPECTION

Checking Operation Sound

(1) Check that when the ignition switch is placed in the ON position (the engine not started), the operating sound of the stepper motor can be heard over the idle speed control servo.

(2) If no operating sound can be heard, check the stepper motor drive circuit. (If the circuit is good, a defective stepper motor or engine control unit is suspected.)

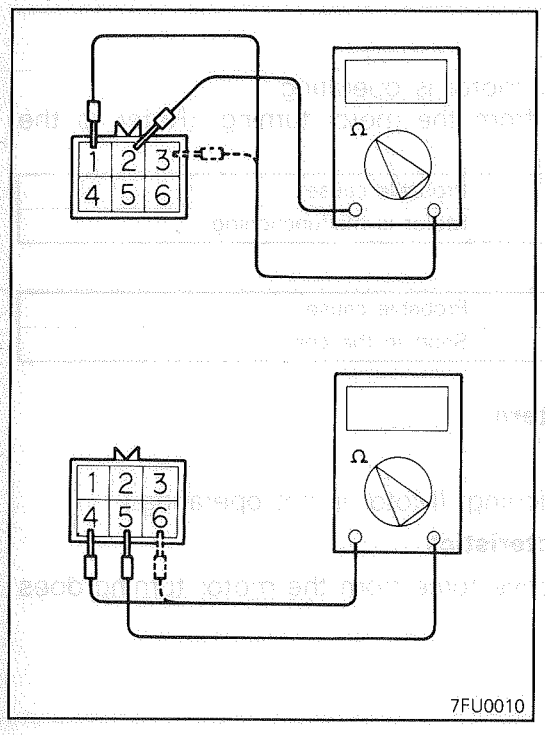

Checking the Coil Resistance

(1) Disconnect the idle speed control servo connector and connect the special tool (test harness).

(2) Measure the resistance between terminal ② (White clip of the special tool) of the connector at the idle speed control servo side and terminal ① (red clip) or terminal ③ (blue clip).

Standard value: 28–33 Ω [at 20°C (68°F)]

(3) Measure the resistance between terminal ⑤ (green clip of the special tool) of the connector at the idle speed control servo side and terminal ⑥ (yellow clip) or terminal ④ (black clip).

Standard value: 28–33 Ω [AT 20°C (68°F]

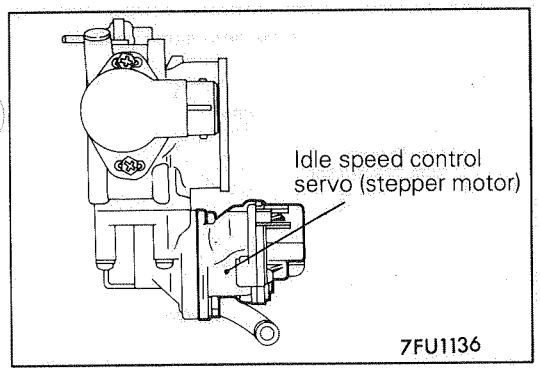

Checking the operation

(1) Remove the throttle body.
(2) Remove the stepper motor.

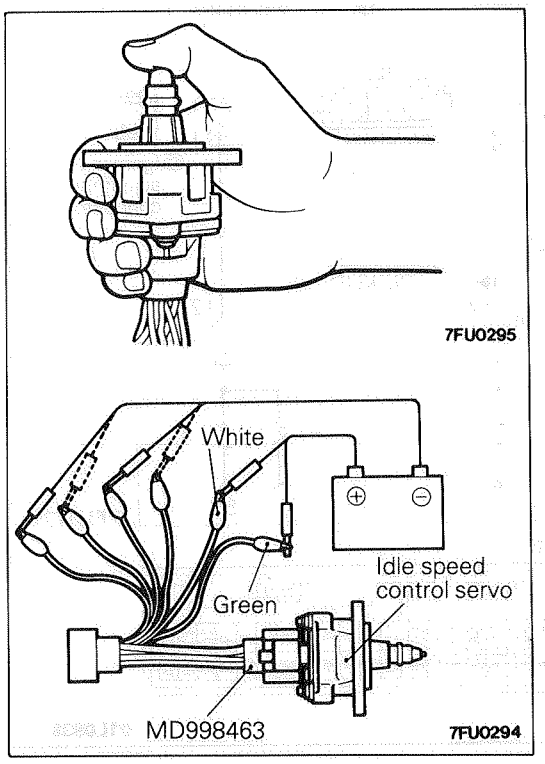

(3) Connect the special tool (test harness) to the Idle speed control servo connector.
(4) Connect the positive ⊕ terminal of a power source (approx 6V) to the white clip or the green clip.
(5) Holding the idle speed control servo as shown in the illustration, connect the negative ⊖ terminal of the power source to each clip in the sequence described below, and check whether or not there is vibration (a feeling of very slight shaking of the stepper motor) as a result of activation of the stepper motor.
    ① Connect the negative ⊖ terminal of the power source to the red and black clips.
    ② Connect the negative ⊖ terminal of the power source to the blue and black clips.
    ③ Connect the negative ⊖ terminal of the power source to the blue and yellow clips.
    ④ Connect the negative ⊖ terminal of the power source to the red and yellow clips.
    ⑤ Connect the negative ⊖ terminal of the power source to the red and black clips.
    ⑥ Repeat the test in the reverse (⑤–①) sequence.
(6) If, as a result of this test, vibration is felt, the stepper motor can be considered to be normal.

IGNITION COIL AND POWER TRANSISTOR

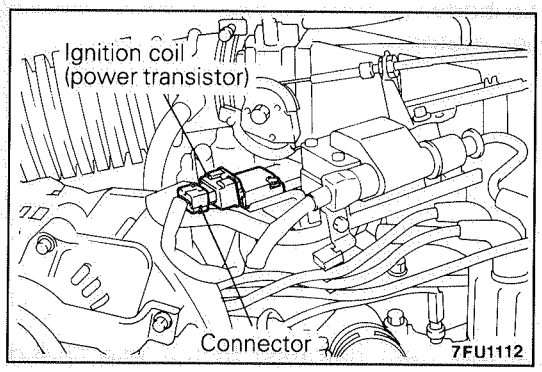

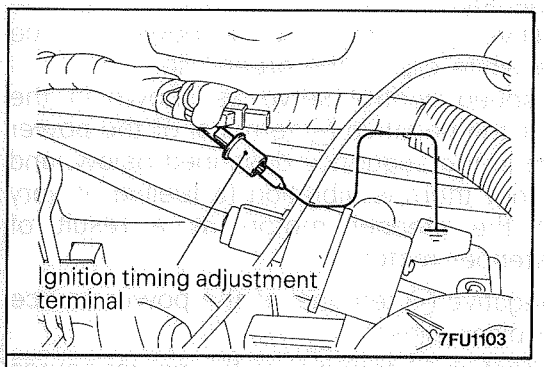

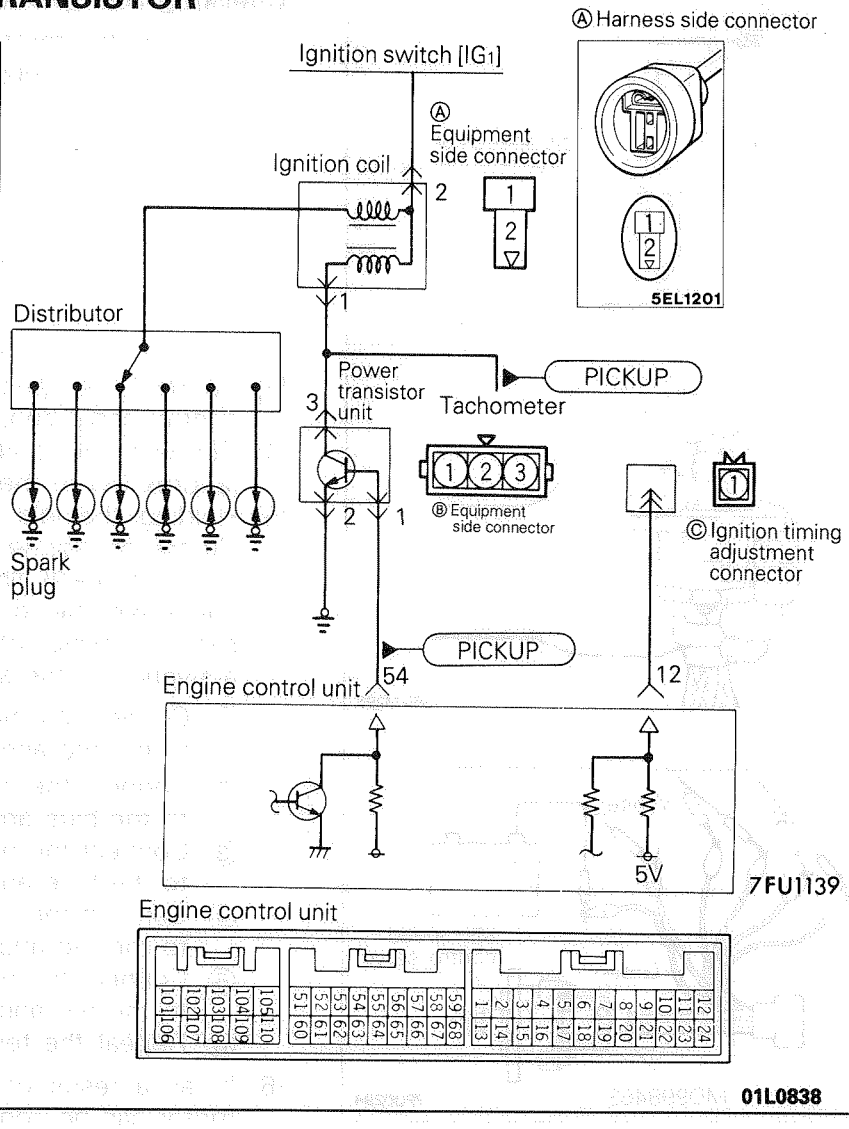

OPERATION

- When the power transistor unit is switched ON by the signals from the engine control unit, the primary current of the ignition coil will flow. When the power transistor unit is switched OFF, the primary current flow is interrupted, and high voltage is produced at the secondary coil.
- When the engine control unit switches OFF the power transistor within the unit, the battery voltage within the unit is applied to the power transistor unit, and the power transistor unit is switched ON. In addition, the power transistor unit is switched OFF when the engine control unit switches ON the power transistor within the unit.

INSPECTION

Using Multi-use tester (MUT)
Spark advance value

Function	Item No.	Data display	Check conditions	Engine state rpm	Standard value °BTDC
Data reading	44	Spark advance	• Engine: warm • Timing light: set (The timing light is set so as to check the actual ignition timing.)	700 (Idling)	7–23
				2,000	18–38

TSB Revision

Ignition timing adjustment mode

Function	Item No.	Data display	Inspection condition	Engine condition	Normal display
Data list	36	Existence of continuity at ground connection of the ignition timing adjustment terminal	Engine: Idling	Ground the ignition timing adjustment terminal.	ON
				Remove the ground connection of the ignition timing adjustment terminal.	OFF

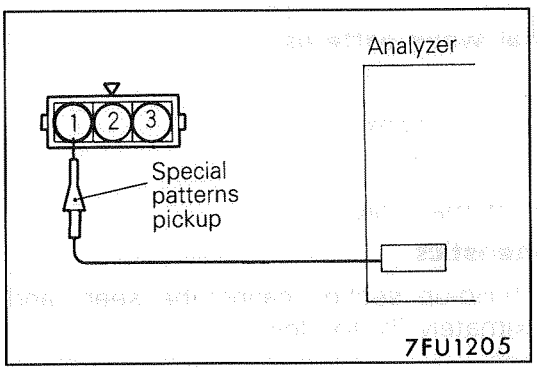

Wave Pattern Inspection Using an Analyzer

- Ignition coil primary signal

Refer to GROUP 16 – Ignition System.

- Power transistor control signal

<Measurement method>

(1) Disconnect the power transistor connector, and connect the special tool (test harness: MB991348) in between. (All terminals should be connected.)

(2) Connect the analyzer special patterns pickup to the power transistor connector terminal ①.

Standard wave pattern

Observation conditions

Function	Special patterns
Pattern height	Low
Pattern selector	Display
Engine	Approx. 1,200 rpm.

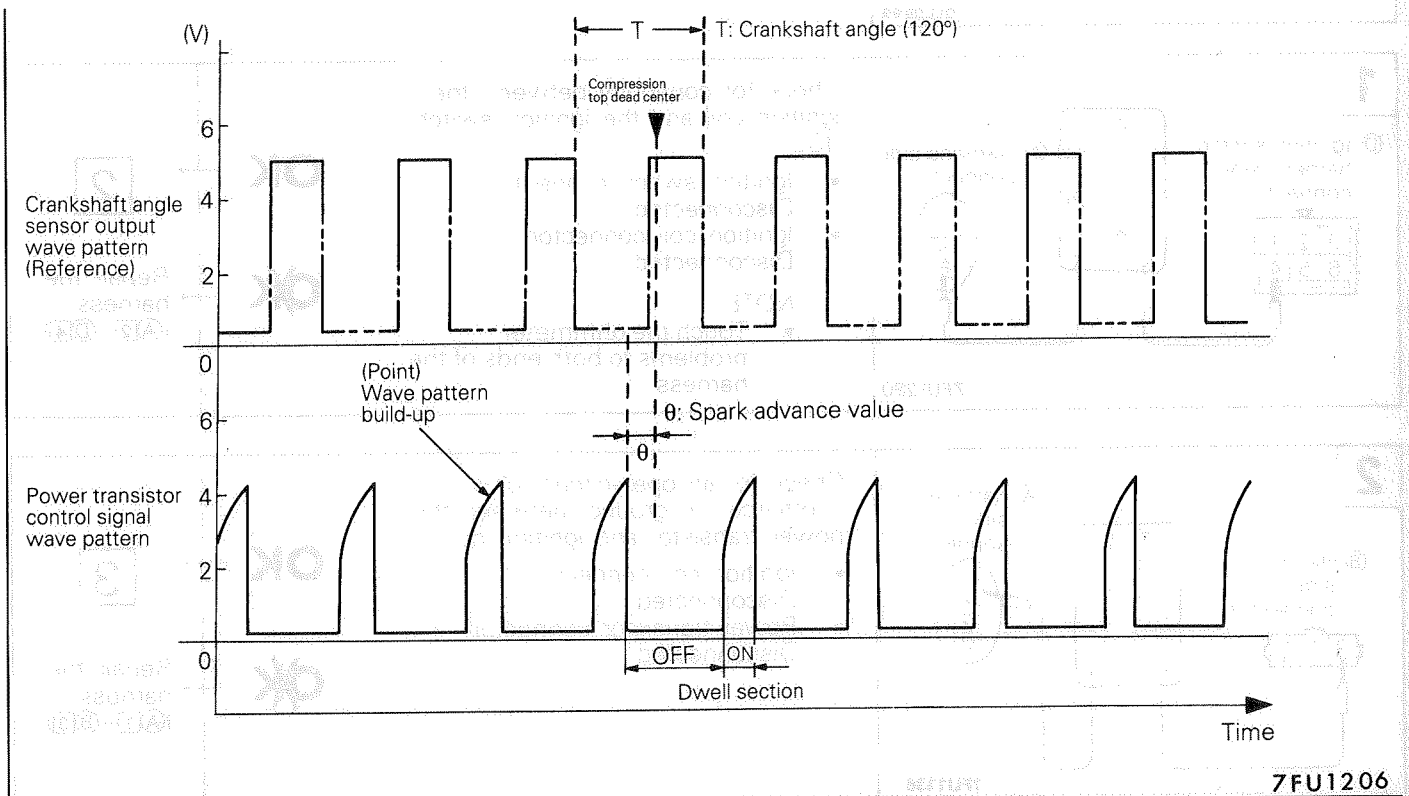

Wave pattern observation points

(Point:) Condition of wave pattern build-up and maximum voltage (Refer to abnormal wave pattern examples 1 and 2.)

Condition of wave pattern build-up section and maximum voltage	Probable cause
Rises from approx. 2V to approx. 4.5V at the top right	Normal
Rectangular wave of approx. 2V	Open-circuit in ignition primary circuit
Rectangular wave at power voltage	Power transistor malfunction

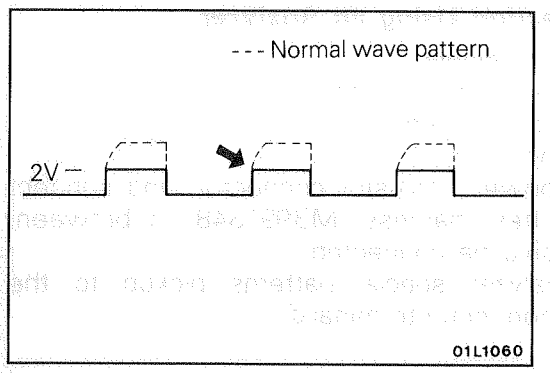

Examples of abnormal wave patterns

- Example 1

Wave pattern during engine cranking

Cause of problem

Broken wire in ignition primary circuit

Wave pattern characteristics

Top-right part of the build-up section cannot be seen, and voltage value is approximately 2V too low.

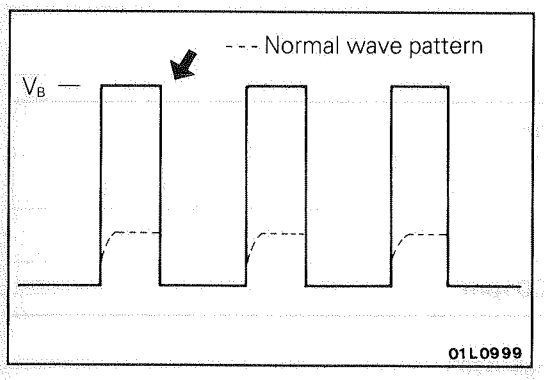

Example 2

Wave pattern during engine cranking

Cause of problem

Malfunction in power transistor

Wave pattern characteristics

Power voltage results when the power transistor is ON.

1

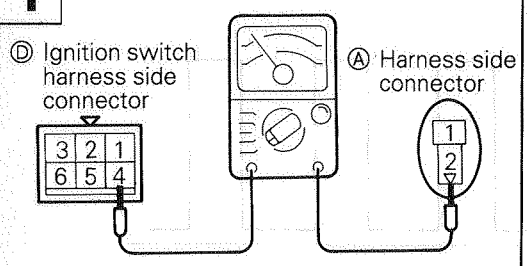

Check for continuity between the ignition coil and the ignition switch [IG].

- Ignition switch connector: Disconnected
- Ignition coil connector: Disconnected

NOTE
- Touch the ohmmeter problems to both ends of the harness.

OK → 2

OK → Repair the harness. (Ⓐ2–Ⓓ4)

2

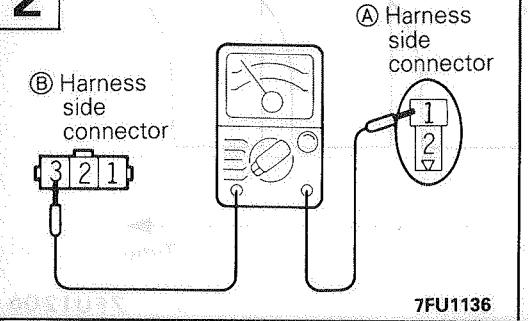

Check for an open-circuit, or a shortcircuit to ground, between the power transistor and ignition coil.

- Ignition coil connector: Disconnected
- Power transistor connector: Disconnected

OK → 3

OK → Repair the harness. (Ⓐ1–Ⓑ3)

3

Ⓐ Harness side connector

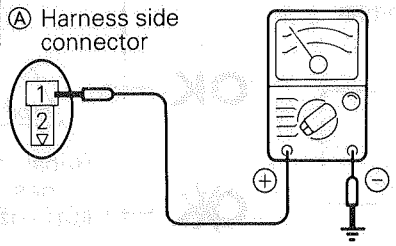

7FU1246

Check for short circuit between the power transistor and ignition coil
- Ignition coil connector: Disconnected
- Power transistor connector: Disconnected

OK → 4

OK → Check for short in the ignition coil primary circuit

4

Ⓑ Harness side connector

Engine control unit harness side connector

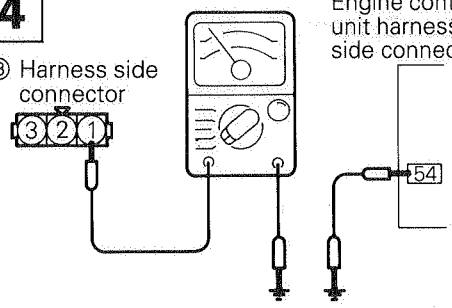

7FU1245

Check for open-circuit or short circuit between the power transistor and the engine control unit.
- Power transistor connector: Disconnected
- Connector: Disconnected

OK → 5

OK → Repair the harness. (Ⓑ1–54)

5

Ⓑ Harness side connector

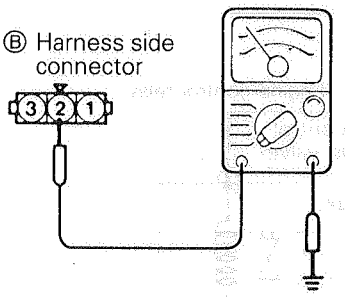

7FU0837

Check the continuity in the power transistor ground circuit.
- Power transistor connector: Disconnected

OK → 6

OK → Repair the harness. (Ⓑ2–Ground)

6

Ⓑ Harness side connector

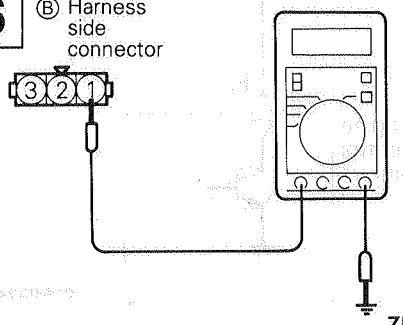

7FU1247

Measure the voltage of the power transistor control signal.
- Power transistor connector: Disconnected
- Ignition switch: START

Voltage (V)
2.0–6.0

OK → 7

OK → Repair the harness. (Ⓑ1–54)

7			
© Ignition timing adjustment connector 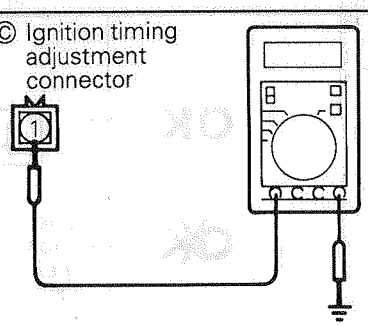 7FU1060	Measure the voltage at the ignition timing adjustment terminal. • Ignition switch: ON **Voltage (V)**: **4.0–5.2**	OK → STOP OK → Repair the harness. (©1–12)	

ACTUATOR INSPECTION

Refer to GROUP 16 – Ignition System.

PURGE CONTROL SOLENOID VALVE

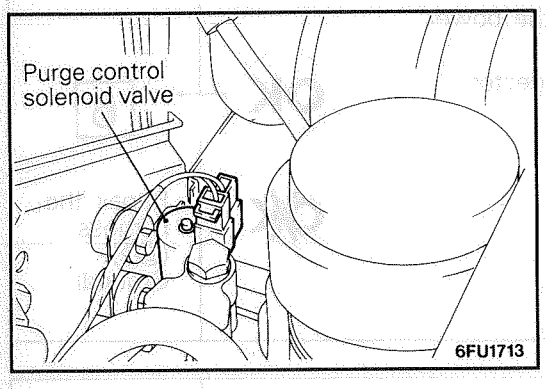

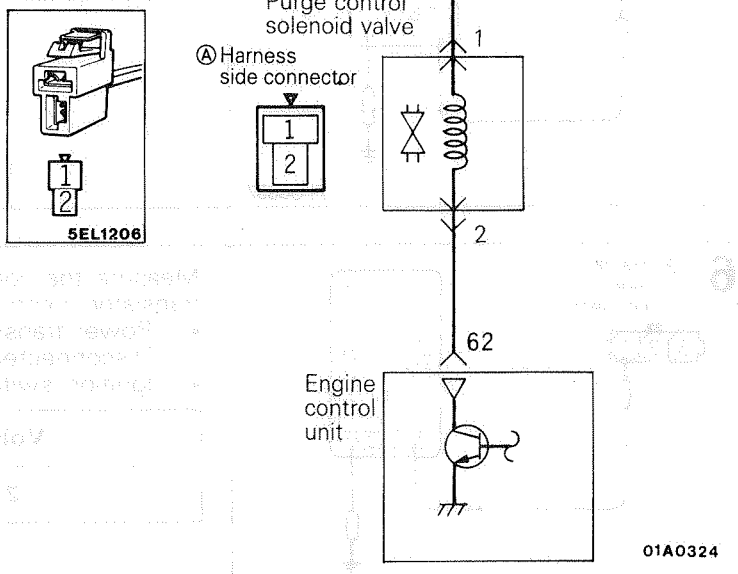

Engine control unit connector

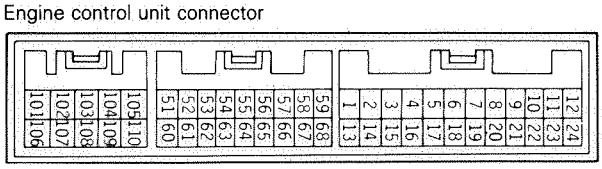

01L0838

OPERATION

- The purge-control solenoid valve is an ON/OFF type of solenoid valve; it functions to regulate the introduction of purge air from the canister to the intake air plenum.
- Battery power supply is supplied, by way of the control relay, to the purge-control solenoid valve. When the engine control unit switches ON the power transistor within the unit, current flows to the coil, and purge air is introduced.

INSPECTION

Using Multi-use tester (MUT)

Function	Item No.	Activation	Check conditions	Normal condition
Actuator test	08	Solenoid valve is switched from OFF to ON.	• Ignition switch: ON	Operating sound is heard when driven.

HARNESS INSPECTION

1

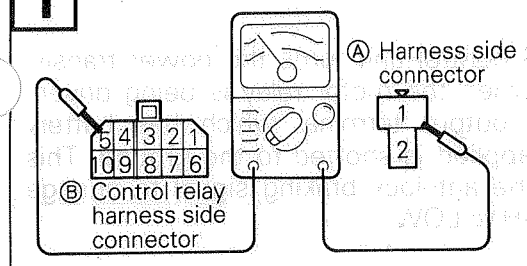

7FU1253

Check for continuity between the purge control solenoid valve and the control relay

- Purge control solenoid valve connector: Disconnected
- Control relay connector: Disconnected

NOTE
- Touch the ohmmeter probes to both ends of the harness.

OK → 2

NG → Repair the harness. (Ⓐ1 – Ⓑ5)

2

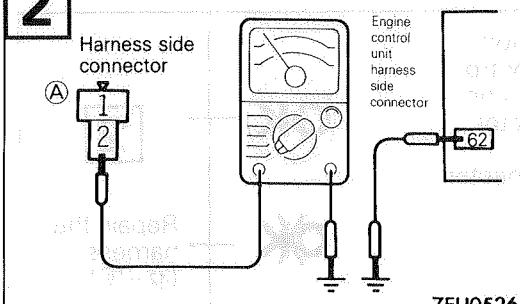

7FU0526

Check for an open-circuit, or a short-circuit to ground, between the purge control solenoid valve and the engine control unit.

- Purge control solenoid valve connector: Disconnected
- Engine control unit connector: Disconnected

OK → STOP

NG → Repair the harness. (Ⓐ2 – 62)

ACTUATOR INSPECTION

Refer to GROUP 17 – Service Adjustment Procedures.

ANTI-LOCK BRAKING SIGNAL

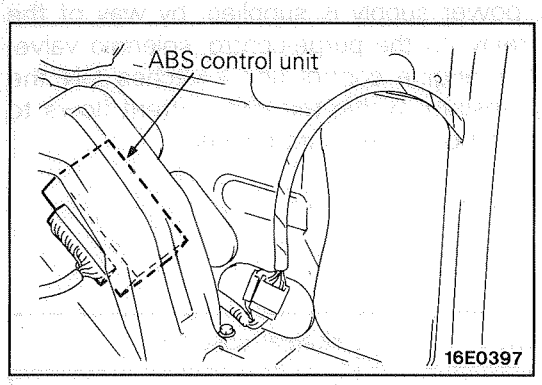

ABS control unit equipment side connector

1	2	3	4	A	5	6	7	8	
9	10	11	12	13	14	15	16	17	18

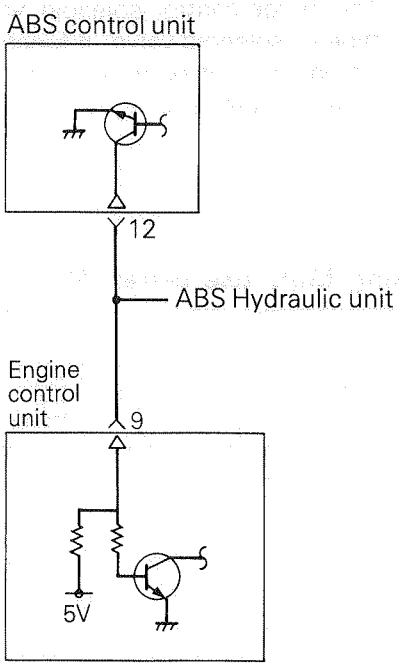

Engine control unit connector

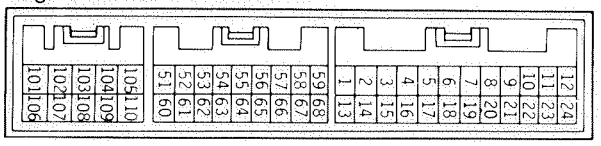

01L0838

7FU1137

OPERATION

- The anti-lock braking signal is output by the anti-lock braking system (ABS) control unit to the engine control unit as a signal to indicate whether the motor relay is being driven or not. The engine control unit controls the idle speed control servo by means of this signal, and gives accurate anti-lock braking effectiveness.
- The ABS control unit turns the power transistor ON when the motor relay is being driven, and the output terminal which has battery voltage applied is shorted to the ground. This causes the anti-lock braking signal to change from HIGH to LOW.

HARNESS INSPECTION

1

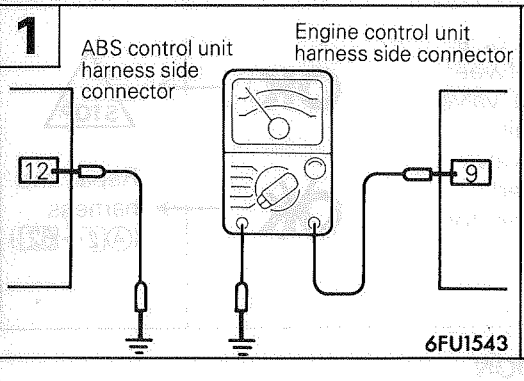

Check for open-circuit or short circuit between the ABS control unit and the engine control unit.
- ABS control unit connector: Disconnected
- Engine control unit connector: Disconnected

OK → 2

NO → Repair the harness. (12 – 9)

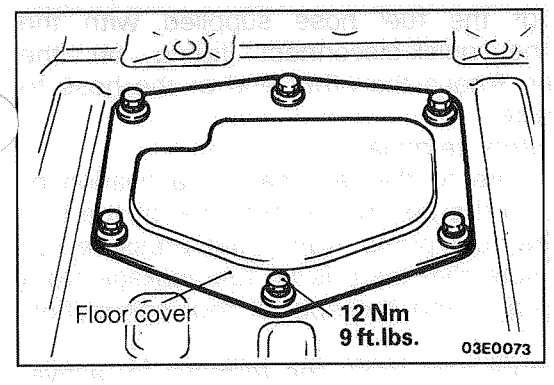

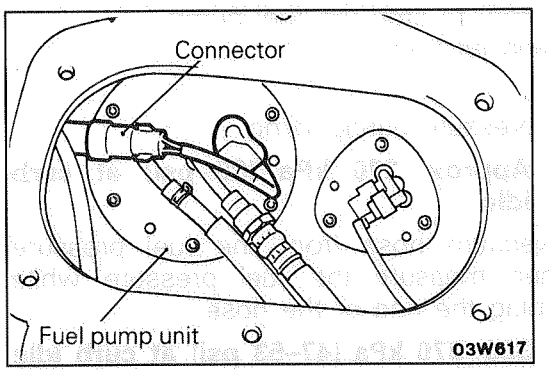

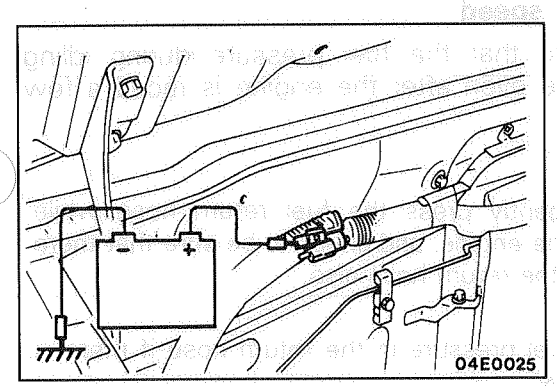

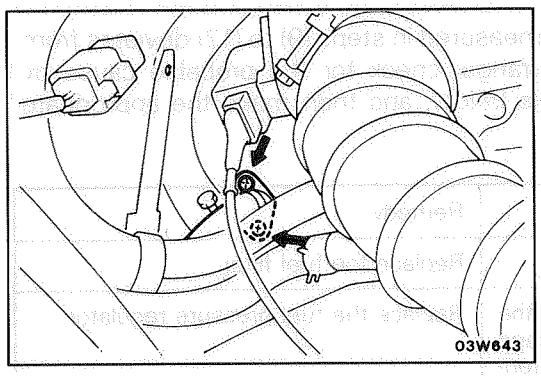

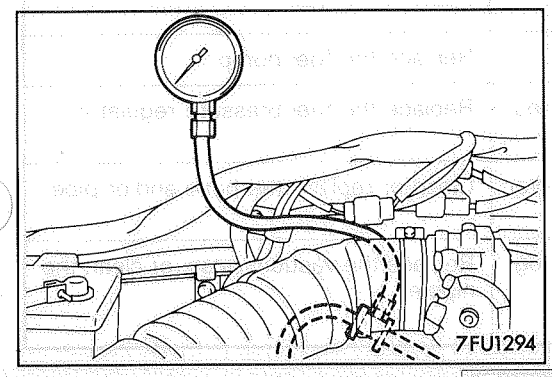

FUEL PRESSURE

HOW TO REDUCE THE FUEL LINE INTERNAL PRESSURE

When removing the fuel pipe and hose, etc., fuel under high pressure will be inside the fuel line, so carry out the following procedure to release the pressure to prevent the fuel from spraying out.

(1) Take out the carpet in the cargo compartment and remove the floor cover.
(2) Disconnect the fuel pump unit connector.
(3) After starting the engine and letting it run until it stops, turn the ignition switch to OFF.
(4) Connect the fuel pump unit connector.
(5) Install the floor cover packing and the floor cover.

FUEL PUMP OPERATION CHECK M13YXAG

(1) Use the multi-use tester to force-drive the fuel pump, and check the operation of the fuel pump.
(For inspection using the multi-use tester, refer to P.13-39.)
(2) If the fuel pump does not operate, inspect by the following procedure, and if the results are normal, then inspect the drive circuit.
① Turn the ignition switch to OFF.
② When the fuel pump drive connector is connected directly to the battery, check if the sound of the fuel pump operation can be heard.

NOTE
As the fuel pump is an in-tank type, the fuel pump sound is hard to hear, so remove the fuel tank cap and check from the tank inlet.

③ Check if the fuel pressure can be felt by pinching the high pressure fuel hose with fingertips.

FUEL PRESSURE TEST M13FNAD

(1) Reduce the internal pressure of the fuel pipes and hoses.
(2) Disconnect the fuel high pressure hose at the delivery pipe side.

Caution
Cover the hose connection with a shop towel to prevent splash of fuel that could be caused by some residual pressure in the fuel pipe line.

(3) Place the MIT215144 adapter on the end of the delivery pipe, then attach the fuel high pressure hose to the adapter using the bolts supplied with the MIT210196 fuel pressure test assembly.

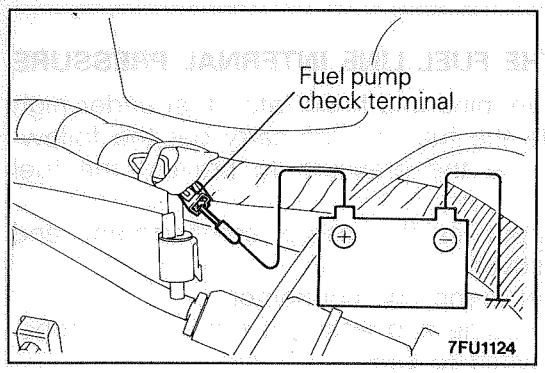

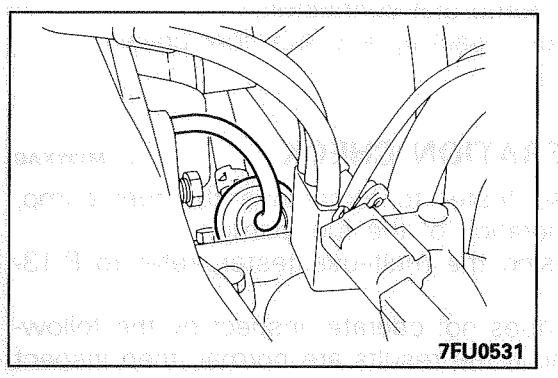

(4) Attach one end of the fuel hose supplied with the MIT210196 to the quick-disconnect fitting on the MIT215144 adapter. Attach the other end of the hose to the fuel pressure gage.
(5) Connect the (–) battery terminal.
(6) Connect a jumper wire to the terminal for activation of the fuel pump and to the positive (+) terminal of the battery to activate the fuel pump. With fuel pressure applied, check to be sure that there is no fuel leakage from the fuel pressure gage and the special tool connection part.
(7) Disconnect the jumper wire (from the terminal for activation of the fuel pump) to stop the fuel pump.
(8) Start the engine and let it idle.

(9) Measure the fuel pressure during idling.
Standard value: Approx. 270 kPa (38 psi) at curb idle

(10) Disconnect the vacuum hose from the fuel pressure regulator, and then measure the fuel pressure while using a finger to plug the end of the hose.
Standard value: 330–370 kPa (47–53 psi) at curb idle speed

(11) Check to be sure that the fuel pressure during idling does not decrease even after the engine is raced a few times.

(12) Use a finger to gently press the fuel return hose while repeatedly racing the engine, and check to be sure that there is fuel pressure in the return hose also.

NOTE
There will be no fuel pressure in the return hose if there is insufficient fuel flow.

(13) If the fuel pressure measured in steps (9) to (12) deviates from the standard value range, check for the probable cause by referring to the table below, and then make the appropriate repair.

Condition	Probable cause	Remedy
• Fuel pressure is too low. • Fuel pressure drops during racing. • No fuel pressure in fuel return hose.	Fuel filter is clogged.	Replace the fuel filter.
	Malfunction of the valve seat within the fuel pressure regulator, or fuel leakage to return side caused by spring deterioration.	Replace the fuel pressure regulator.
	Fuel pump low discharge pressure.	Replace the fuel pump.
Fuel pressure is too high.	The valve within the fuel pressure regulator is sticking.	Replace the fuel pressure regulator.
	Clogging of the fuel return hose and/or the pipe.	Clean or replace the hose and/or pipe.
No change of the fuel pressure when vacuum hose is connected and when not connected.	Damaged vacuum hose or nipple clogging.	Replace the vacuum hose, or clean the nipple.

(14)Stop the engine and check for a change of the value indicated by the fuel pressure gage. The condition is normal if there is no decrease of the indicated value within two minutes.
If there is a decrease of the indicated value, monitor the speed of the decrease, and, referring to the table below, determine the cause of the problem and make the appropriate repair.

Condition	Probable cause	Remedy
After the engine is stopped, the fuel pressure drops gradually.	Injector leakage.	Replace the injector.
	Leakage at the fuel pressure regulator valve seat.	Replace the fuel pressure regulator.
There is a sudden sharp drop of the fuel pressure immediately after the engine is stopped.	The check valve (within the fuel pump) is not closed.	Replace the fuel pump.

(15)Reduce the internal pressure of the fuel pipes and hose. (Refer to P. 13-91.)
(16)Disconnect the fuel pressure gage and the special tool from the delivery pipe.

Caution
Because there will be some residual pressure in the fuel pipe line, use a shop towel to cover so that fuel doesn't splatter.

(17)Replace the O-ring at the end of the fuel high-pressure hose with a new one.
(18)After connecting the fuel high-pressure hose to the delivery pipe, tighten the installation bolt at the specified torque.

Tightening torque: 5 Nm (3.6 ft.lbs)

(19)Check to be sure that there is no fuel leakage.
① Apply battery voltage to the terminal for activation of the fuel pump so as to activate the fuel pump.
② With fuel pressure applied, check for leakage of the fuel line.

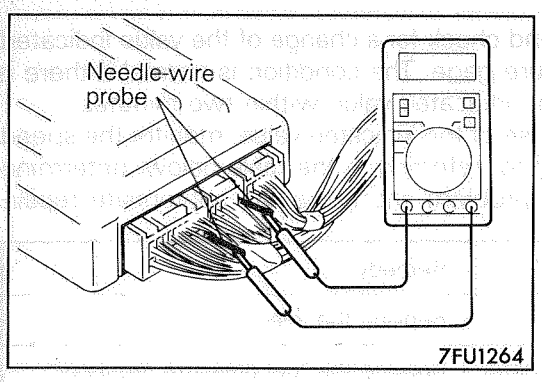

ENGINE CONTROL UNIT TERMINAL VOLTAGE CHECK

M13ZEAA

(1) Connect a needle wire probe (test harness: MB991223 or paper clip) to a voltmeter probe.
(2) Insert the needle wire probe into each of the engine control unit connector terminals from the wire side, and measure the voltage while referring to the check chart.

NOTE
1. Make the voltage measurement with the engine control unit connectors connected.
2. Make the voltage measurement between terminal No.26 (ground terminal) and each terminal.
3. Pull out the engine control unit to make it easier to reach the connector terminals.
4. The checks do not have to be carried out in the order given in the chart.

Caution
Never short-circuit the positive (+) probe between a connector terminal and ground, or the vehicle wiring, the sensor, the engine control unit, etc., will be damaged.

(3) If voltmeter shows any deviation from standard value, check the corresponding sensor, actuator and related electrical wiring, then repair or replace.
(4) After repair or replacement, recheck with the voltmeter to confirm that the repair has corrected the problem.

Terminal Voltage Check Chart

Engine Control Unit Terminal Arrangement

Engine control connector

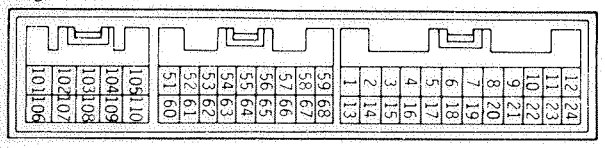

01L0838

Terminal No.	Check Item	Check Condition (Engine Condition)	Standard value	Remarks
103	Backup power supply	Ignition switch: OFF	SV	
102	Power supply	Ignition switch: ON	SV	
107				
110	Ignition switch (IG)	Ignition switch: ON	SV	
63	Control relay (power supply)	Ignition switch: OFF	SV	
66		Ignition switch: ON	0–3V	
56	Control relay (fuel pump)	Ignition switch: ON	SV	
		Engine: Idling	0–3V	
23	Sensor applied voltage	Ignition switch: ON	4.5–5.5V	

Terminal No.	Check Item	Check Condition (Engine Condition)		Standard value	Remarks
10	Air flow sensor	Engine: Idling		2.2–3.2V	
		Engine speed: 2,000 rpm			
57	Air flow sensor reset signal	Engine: Idling		0–1V	
		Engine speed: 3,000 rpm		6–9V	
8	Intake air temperature sensor	Ignition switch: ON	When intake air temperature is 0°C (32°F)	3.2–3.8V	
			When intake air temperature is 20°C (68°F)	2.3–2.9V	
			When intake air temperature is 40°C (104°F)	1.5–2.1V	
			When intake air temperature is 80°C (176°F)	0.4–1.0V	
16	Barometric pressure sensor	Ignition switch: ON	When height is 0 m (0 ft.)	3.7–4.3V	
			When height is 1,200 m (3.937 ft.)	3.2–3.8V	
20	Engine coolant temperature sensor	Ignition switch: ON	When engine coolant temperature is 0°C (32°F)	3.2–3.8V	
			When engine coolant temperature is 20°C (68°F)	2.3–2.9V	
			When engine coolant temperature is 40°C (104°F)	1.3–1.9V	
			When engine coolant temperature is 80°C (176°F)	0.3–0.9V	
19	Throttle position sensor	Ignition switch: kept in ON position for 15 seconds or more	Set throttle valve to idle position.	0.3–1.0V	
			Fully open throttle valve.	4.5–5.5V	
14	Idle position switch	Ignition switch: ON	Set throttle valve to idle position.	0–1V	
			Slightly open throttle valve.	4V or more	
22	Top dead center sensor	Engine: Cranking		0.2–3.0V	
		Engine: Idling			
21	Crank angle sensor	Engine: Cranking		0.2–3.0V	
		Engine: Idling			
108	Ignition switch–ST	Engine: Cranking		8V or more	M/T
104	Inhibitor switch	Ignition switch: ON	Set selector lever to P or N.	0–3V	A/T
			Set selector lever to D, 2, L or R.	8–14V	
18	Vehicle speed sensor	• Ignition switch: ON • Move the vehicle slowly forward.		0↔5V (Changes repeatedly)	
5	Power steering fluid pressure sensor	Engine: Idling after warming up	Set the steering wheel to the straight forward position.	SV	
			Half turn the steering wheel.	0–3V	

Terminal No.	Check Item	Check Condition (Engine Condition)		Standard value	Remarks
7	Air conditioner switch	Engine: Idling	Turn the air conditioner switch to OFF.	0–3V	
			Turn the air conditioner switch to ON. (Air conditioner compressor is operating)	SV	
65	Air conditioner relay	• Engine: Idling • Air conditioner switch: OFF → ON (Air compressor is operating)		SV or temporarily 6V or more → 0–3V	
4	Oxygen sensor	Engine: Running at 2,000 rpm after having warmed up. (Check using a digital type voltmeter.)		0↔0.8V (Changes repeatedly)	
51	No. 1 injector	Engine: While engine is idling after having warmed up, suddenly depress the accelerator pedal.		From 11–14V, momentarily drops slightly	
52	No. 2 injector				
60	No. 3 injector				
61	No. 4 injector				
105	No. 5 injector				
109	No. 6 injector				
58	Stepper motor coil <A1>	Engine: While engine is warming up directly after having been started. (for approx. 1 min.)		SV ↑↓ 0–3V (Changes repeatedly)	
59	Stepper motor coil <A2>				
67	Stepper motor coil <B1>				
68	Stepper motor coil <B2>				
54	Power transistor unit	Engine speed: 3,000 rpm		0.3–3V	
52	Purge control solenoid valve	Ignition switch: ON		SV	
		Engine: Running at 3,000 rpm while engine is warming up after having been started.		0–3V	
12	Ignition timing adjustment terminal	Ignition switch: ON	Ground the ignition timing adjustment terminal.	0–1V	
			Remove the ground connection from the ignition timing adjustment terminal.	4.0–5.5V	
64	Engine warning light	Ignition switch: OFF → ON		0–3V ↓ 9–13V (After several seconds have elapsed)	
9	Anti-lock braking signal	Engine: Idling		SV	
		• When vehicle first starts to move after turning the ignition switch to ON • Vehicle speed: 0 → 10 km/h (0–6 mph)		SV ↓ 0–3V (Temporarily)	

FUEL PUMP

REMOVAL OF INSTALLATION

M13HA--

Pre-removal and Post-installation Operation
- Drain and filling of Fuel
- Removal and installation of the Floor Carpet

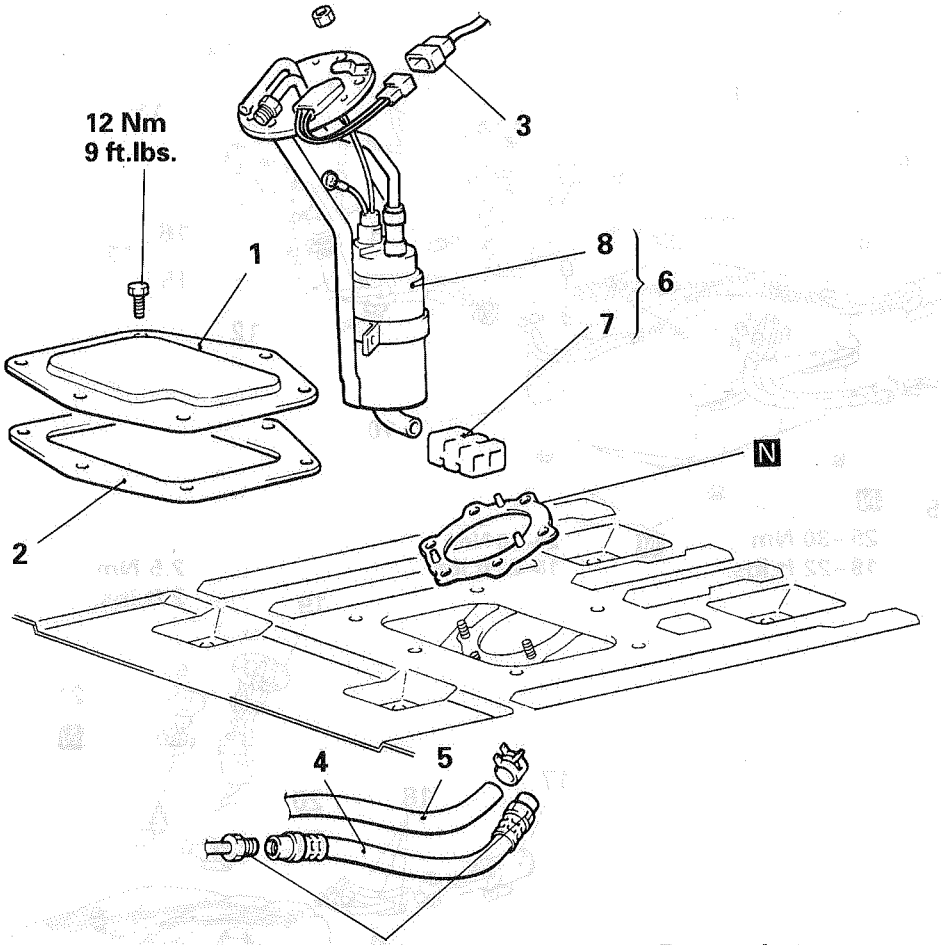

Removal steps
1. Floor cover
2. Packing
3. Fuel pump connector
4. High-pressure fuel hose
5. Fuel return hose connection
6. Fuel pump and filter assembly
7. Filter
8. Fuel pump assembly

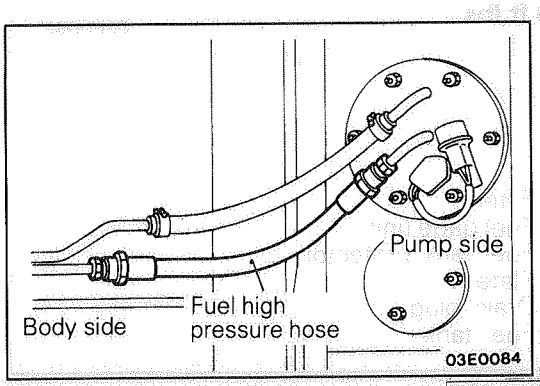

SERVICE POINT OF REMOVAL AND INSTALLATION

M13HBBB

4. REMOVAL AND INSTALLATION OF HIGH-PRESSURE FUEL HOSE

(1) After disconnecting the high-pressure fuel hose at the body-side main pipe connection, disconnect the pump-side connection.
(2) Install in the reverse order from removal.

TSB Revision

FUEL TANK

REMOVAL AND INSTALLATION

M13GA--

Pre-removal and Post-installation Operation
- Draining and Filling of Fuel
- Removal and Installation of the Filler Neck Protector
- Removal and Installation of the Floor Carpet
- Removal and Installation of the Floor Cover

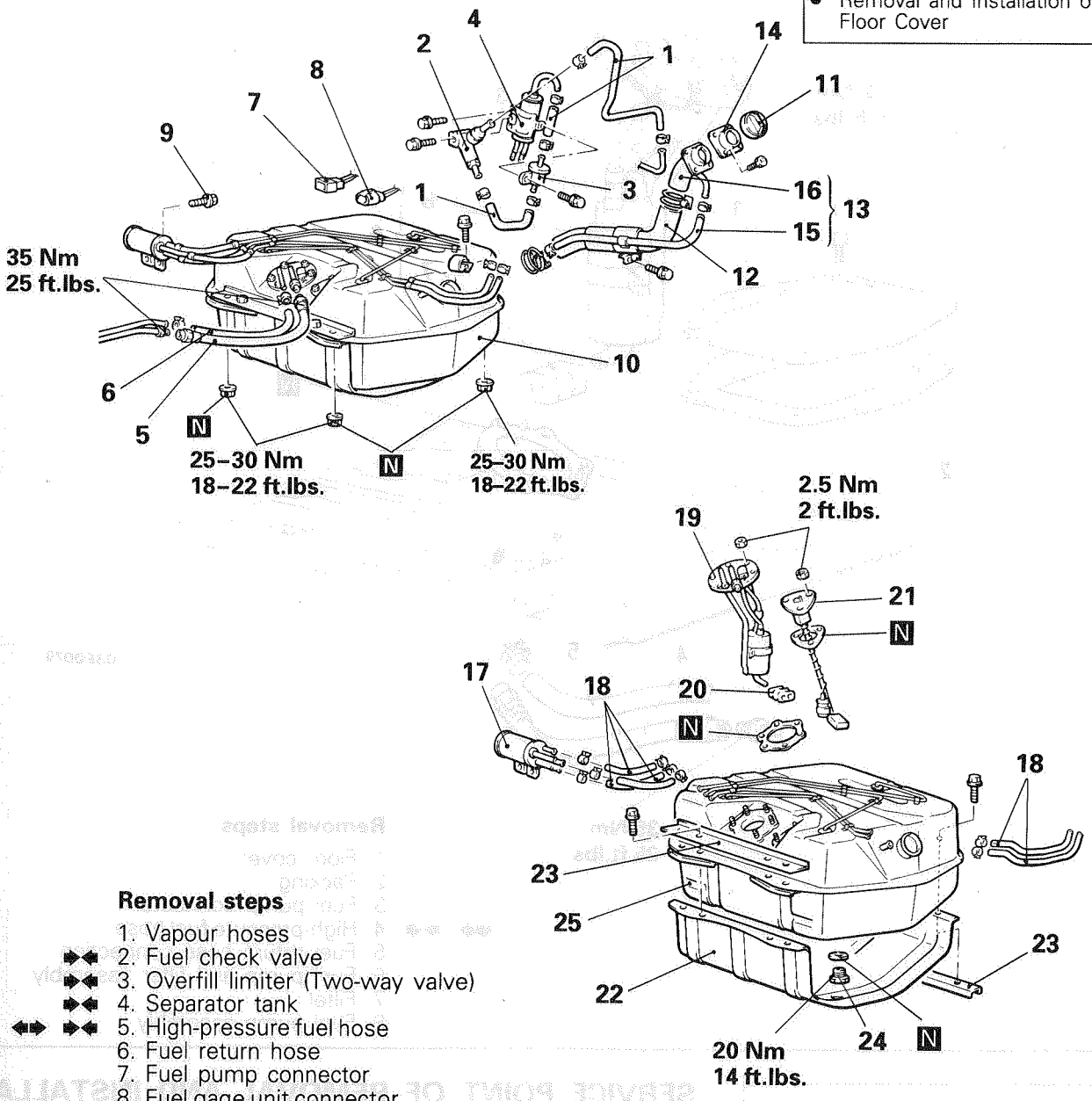

Removal steps

1. Vapour hoses
2. Fuel check valve
3. Overfill limiter (Two-way valve)
4. Separator tank
5. High-pressure fuel hose
6. Fuel return hose
7. Fuel pump connector
8. Fuel gage unit connector
9. Bolts
10. Fuel tank assembly
11. Fuel tank cap
12. Fuel filler hose
13. Fuel filler neck and vapour hose assembly
14. Packing
15. Vapour hose
16. Fuel filler neck
17. Separator tank
18. Vapour hoses
19. Fuel pump assembly
20. Filter
21. Fuel gage unit
22. Fuel tank protector
23. Plate
24. Drain plug
25. Fuel tank

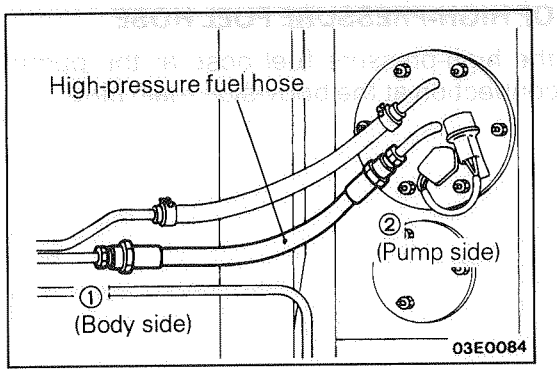

SERVICE POINTS OF REMOVAL M13GBAM

5. REMOVAL OF HIGH-PRESSURE FUEL HOSE

After disconnecting the high-pressure fuel hose at the body-side main pipe connection, disconnect the pump-side connection.

Caution
The fuel line has some residual pressure, so cover it with a shop towel.

INSPECTION M13GCAO

- Check the hoses and the pipes for crack or damage.
- Check the fuel tank cap for malfunction
- Check the fuel tank for deformation, corrosion or crack.
- Check the fuel tank for dust or foreign material.

NOTE
If the inside of the fuel tank is to be cleaned, use any one of the following:
(1) Kerosene
(2) Trichloroethylene
(3) A neutral emulsion type detergent

- Check the in-tank fuel filter for damage or clogging.
- Check the check valve for malfunction.

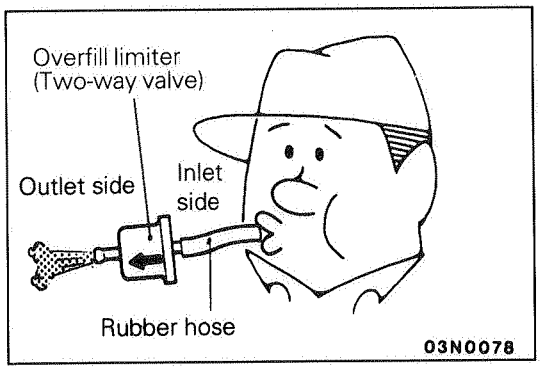

OVERFILL LIMITER (TWO-WAY VALVE)

Attach a clean rubber hose, and check the operation of the overfill limiter (two-way valve).

Inspection procedure	Normal condition
Blow lightly from the inlet side (fuel tank side).	Air passes through after a slight resistance is felt.
Blow lightly from the outlet side (canister side).	Air passes through.

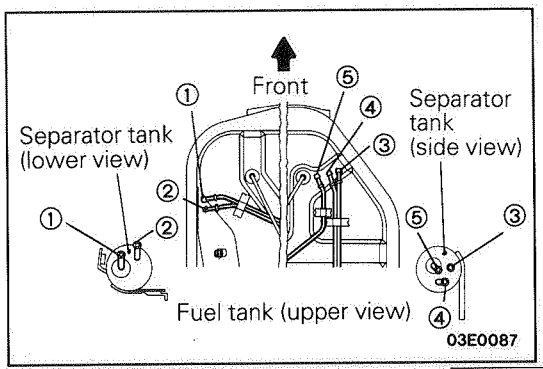

SERVICE POINTS OF INSTALLATION M13GDAV

18. INSTALLATION OF VAPOUR HOSES/17./4. SEPARATOR TANK

Connect the vapour hoses with the corresponding numbers as shown in the illustration.

Caution
Connect the vapour hose with the identification mark (yellow tape) between (1)–(1), with the mark towards the separator tank side.

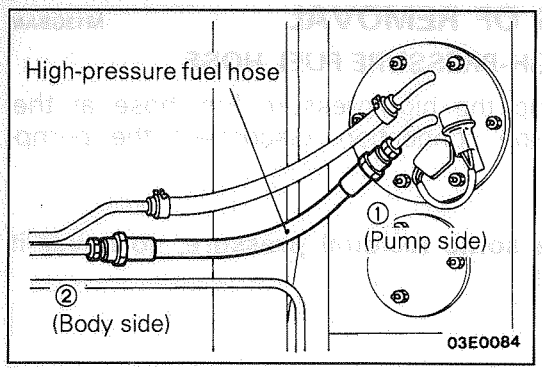

5. INSTALLATION OF HIGH-PRESSURE FUEL HOSE

After tightening the high-pressure fuel hose at the pump side, tighten the connection at the body-side main pipe.

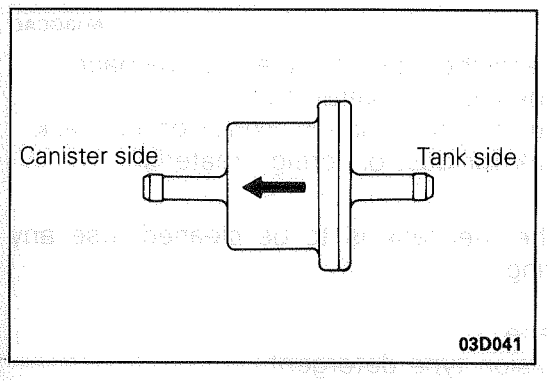

3. INSTALLATION OF OVERFILL LIMITER (TWO-WAY VALVE)

Install the overfill limiter (two-way valve), being careful not to mistake the direction.

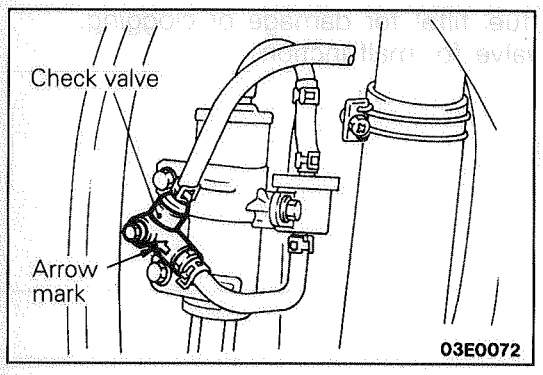

2. INSTALLATION OF FUEL CHECK VALVE

Install the fuel check valve as shown in the illustration, being careful not to mistake the direction.

FUEL LINE AND VAPOR LINE

REMOVAL AND INSTALLATION

M13KA--

Pre-removal Operation
- Release of Residual Pressure from High-pressure Fuel Hose (Refer to P.13-91.)

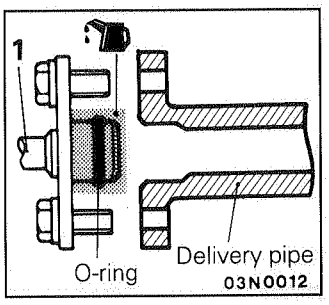

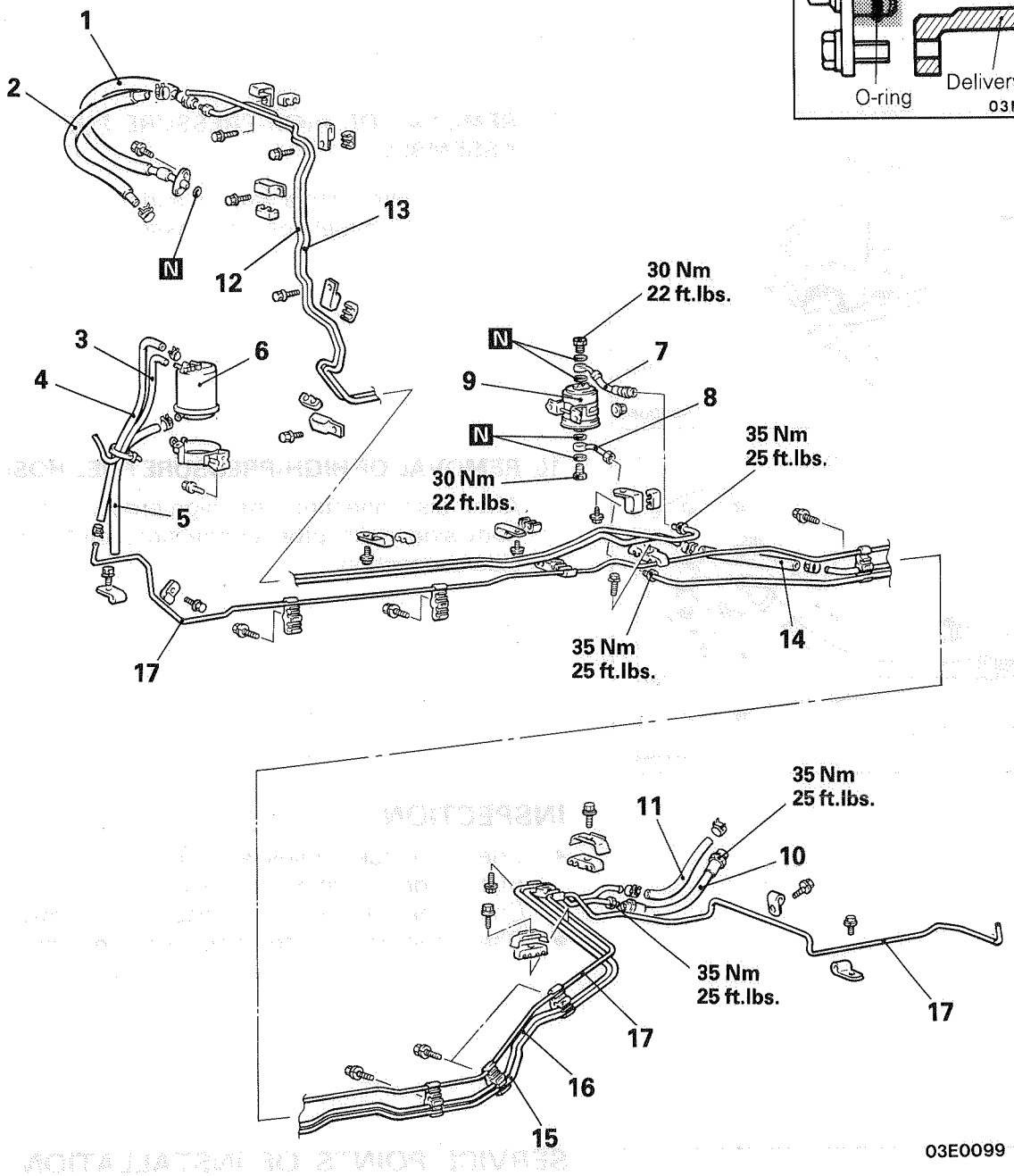

Removal steps

- 1. High-pressure fuel hose
- 2. Fuel return hose
- 3. Fuel vapor hose
- 4. Fuel vapor hose
- 5. Fuel vapor hose
- 6. Canister
- 7. High-pressure fuel hose
- 8. Joint assembly
- 9. Fuel filter
- 10. High-pressure fuel hose
- 11. Fuel return hose
- 12. Fuel main pipe (front)
- 13. Fuel return pipe (front)
- 14. Fuel return hose
- 15. Fuel main pipe (rear)
- 16. Fuel return pipe (rear)
- 17. Fuel vapor pipe

SERVICE POINTS OF REMOVAL M13KBAS

1. REMOVAL OF HIGH-PRESSURE FUEL HOSE

Caution
Cover the high-pressure hose connection with shop towels to prevent splash of fuel that could be caused by some residual pressure in the fuel pipe line.

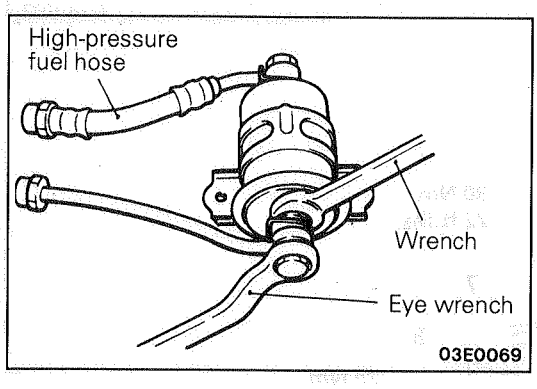

7. REMOVAL OF HIGH-PRESSURE FUEL HOSE/8. JOINT ASSEMBLY

Hold fuel filter with a wrench and remove eye bolt retaining high-pressure fuel hose joint assembly with an eye wrench.

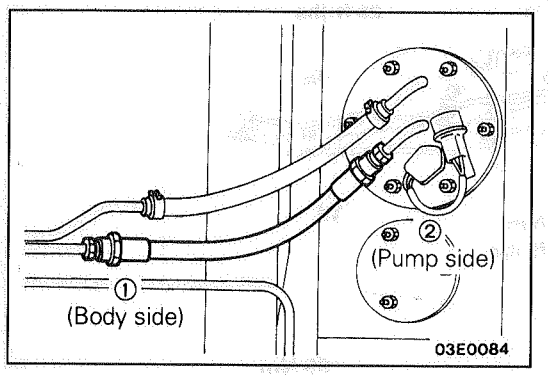

10. REMOVAL OF HIGH-PRESSURE FUEL HOSE

After disconnecting the high-pressure fuel hose at the body-side main pipe connection, disconnect the pump-side connection.

INSPECTION M13KCAL

- Check the fuel hoses and pipes for cracks, bend, deformation, deterioration or clogging.
- Check the fuel filter for clogging or damage.
- Check the canister for clogging or damage.

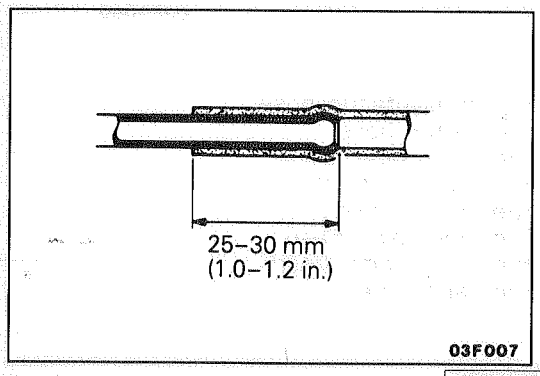

SERVICE POINTS OF INSTALLATION M13KDAW

14./11./2. INSTALLATION OF FUEL RETURN HOSE/ 5./4./3. FUEL VAPOUR HOSE

Insert each hose approximately 25–30 mm (1.0–1.2 in.) into the corresponding pipe.

1. INSTALLATION OF HIGH-PRESSURE FUEL HOSE (DELIVERY PIPE SIDE)

Insert the hose, being careful not to damage the O-ring, and tighten securely.

ENGINE CONTROL

SPECIFICATIONS

SERVICE SPECIFICATIONS

M13CB-B

Item	Specification
Standard value Accelerator cable free play mm (in.)	1–2 (.04–.08)

TROUBLESHOOTING

ACCELERATOR CABLE AND ACCELERATOR PEDAL

M13EGAA

Symptom	Probable cause	Remedy
Throttle valve will not fully open or close	Misadjusted accelerator cable	Adjust
	Broken return spring	Replace
	Throttle lever malfunction	
Accelerator pedal operation not smooth (over acceleration)	Accelerator pedal wrongly tightened	Repair
	Misinstalled accelerator cable	
	Accelerator cable requires lubrication	Lubricate or replace

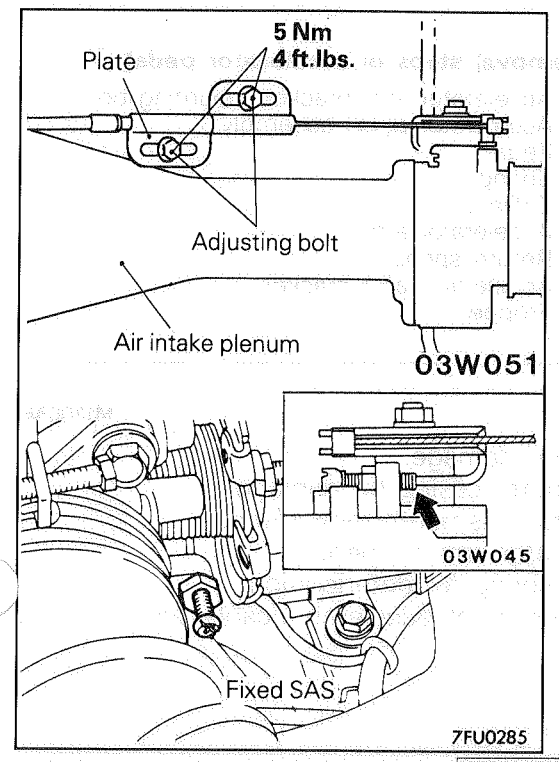

SERVICE ADJUSTMENT PROCEDURES

ACCELERATOR CABLE FREE PLAY ADJUSTMENT

M13FBCM

<VEHICLES WITHOUT AUTO-CRUISE CONTROL SYSTEM>

For models equipped with the auto-cruise control system, refer to P. 13-126.

(1) Check to be sure that there are no sharp bends in the routing of the accelerator cable.
(2) Check to be sure that the throttle link is touching the fixed SAS (stopper).
(3) Move the plate to bring the inner cable play to the standard value, and then secure the adjusting bolt.

Standard value: 1–2 mm (.04–.08 in.)

NOTE
If there is excessive play of the accelerator cable, the vehicle speed drop ("undershoot") when climbing a slope will be large.
If there is no play (excessive tension) is the accelerator cable, the idling speed will increase.

TSB Revision

ACCELERATOR CABLE AND PEDAL

REMOVAL AND INSTALLATION

M13OA-

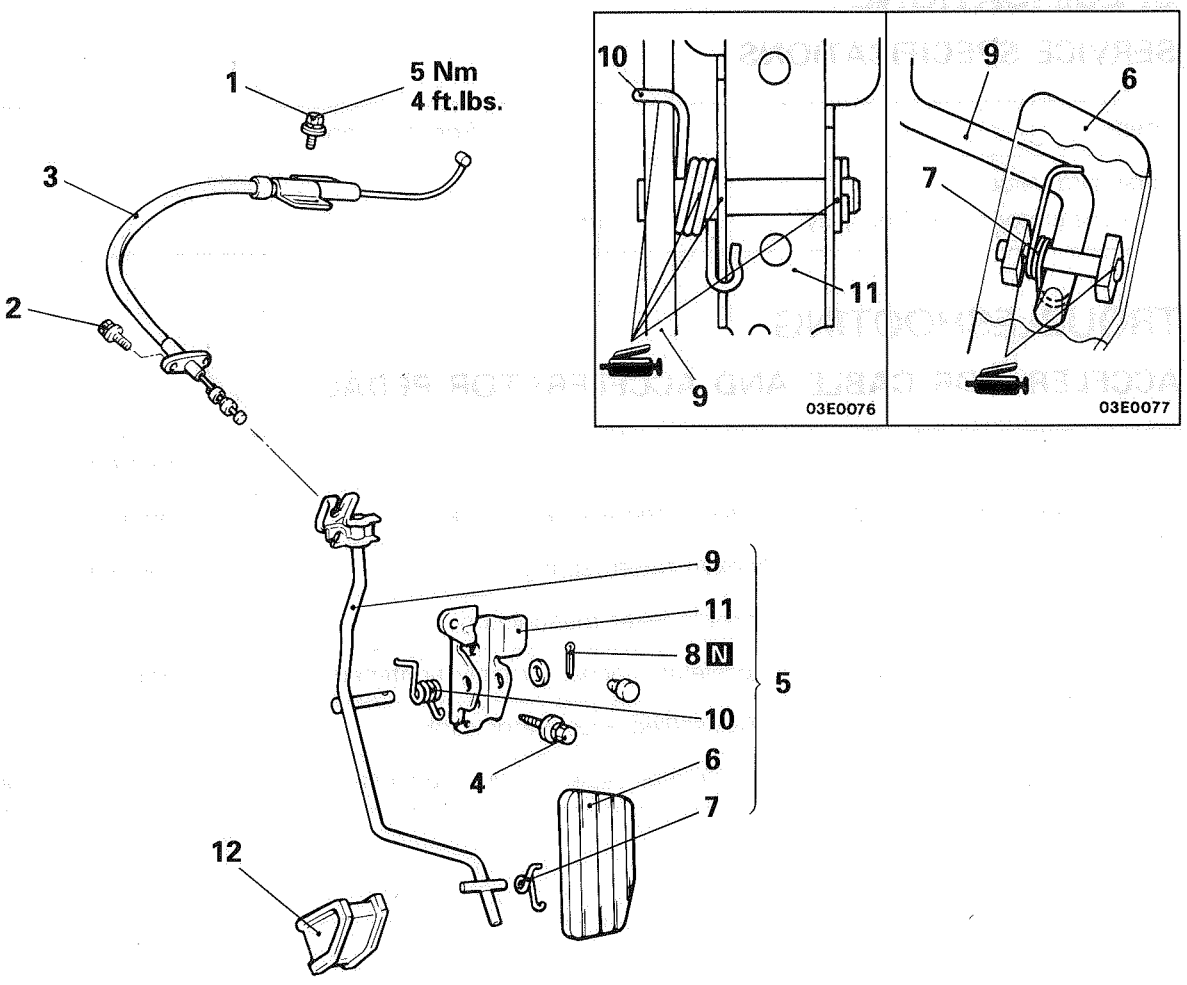

Removal steps of accelerator cable

- Adjustment of accelerator cable (Refer to P.13-103.)

1. Accelerator cable adjusting bolts
2. Accelerator cable mounting bolts
3. Accelerator cable

Removal steps of accelerator pedal

4. Accelerator arm bracket mounting bolts
5. Accelerator pedal assembly
6. Pedal
7. Spring
8. Cotter pin
9. Accelerator arm
10. Return spring
11. Accelerator arm bracket
12. Stopper

INSPECTION

M13OCAB

- Check the cable for damage.
- Check the cable outer casing for damage.
- Check the cable for unsmooth movement.
- Check the accelerator arm for bend.
- Check the return spring for deterioration.
- Check the connection of accelerator cable and end fitting.

TSB Revision

AUTO-CRUISE CONTROL SYSTEM

SPECIFICATIONS

GENERAL SPECIFICATIONS

M13CA--

Items		Specifications
Main switch		
Rated load	A	1
Voltage drop	V	0.15 or less
Control switch		
Rated load	A	
SET		0.1
RESUME		0.1
CANCEL		1.2
Voltage drop	V	0.2 or less
Auto-cruise control unit		
Set error	km/h (mph)	$0^{0}_{-1.0}$ ($0^{0}_{-.6}$)
Range of speed control	km/h (mph)	40–145 (25–90)
Actuator		
Drive system		Vacuum type
Stroke	mm (in.)	38–42 (1.5–1.7)
Motor-driven vacuum pump		
Rated load	A	0.4 or less

SERVICE SPECIFICATIONS

M13CB--

Items		Specifications
Accelerator cable play	mm (in.)	0–1 (0–.04)
Throttle cable play	mm (in.)	1–2 (.04–.08)
Auto-cruise control cable play	mm (in.)	1–2 (.04–.08)
Control valve, release valve resistance	Ω	50–60

SPECIAL TOOLS

M13DA--

Tool	Number	Name	Use
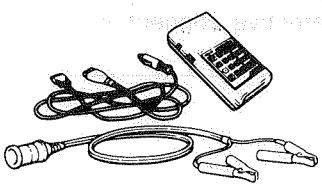	MB991341	Multi-use tester assembly	• Checking of the self-diagnosis output
	MB991423	ROM pack	

TSB Revision

TROUBLESHOOTING

M13EBEA

Before commencing troubleshooting, carry out each of the following inspections, and make repairs if necessary.

1. Check that the motor-driven vacuum pump assembly, actuator, intermediate link, each cable and the vacuum hose are all installed correctly, and that each cable and vacuum hose circuit is correct.
2. Check that the movement of the intermediate link and each cable is smooth.
3. Check that there is not too much play or tension in each cable.

TROUBLESHOOTING QUICK-REFERENCE CHART

Auto-cruise control system is canceled when cancellation not wanted.
Or, the auto-cruise control system cannot be set after an automatic cancellation.

ECU: Electronic control unit

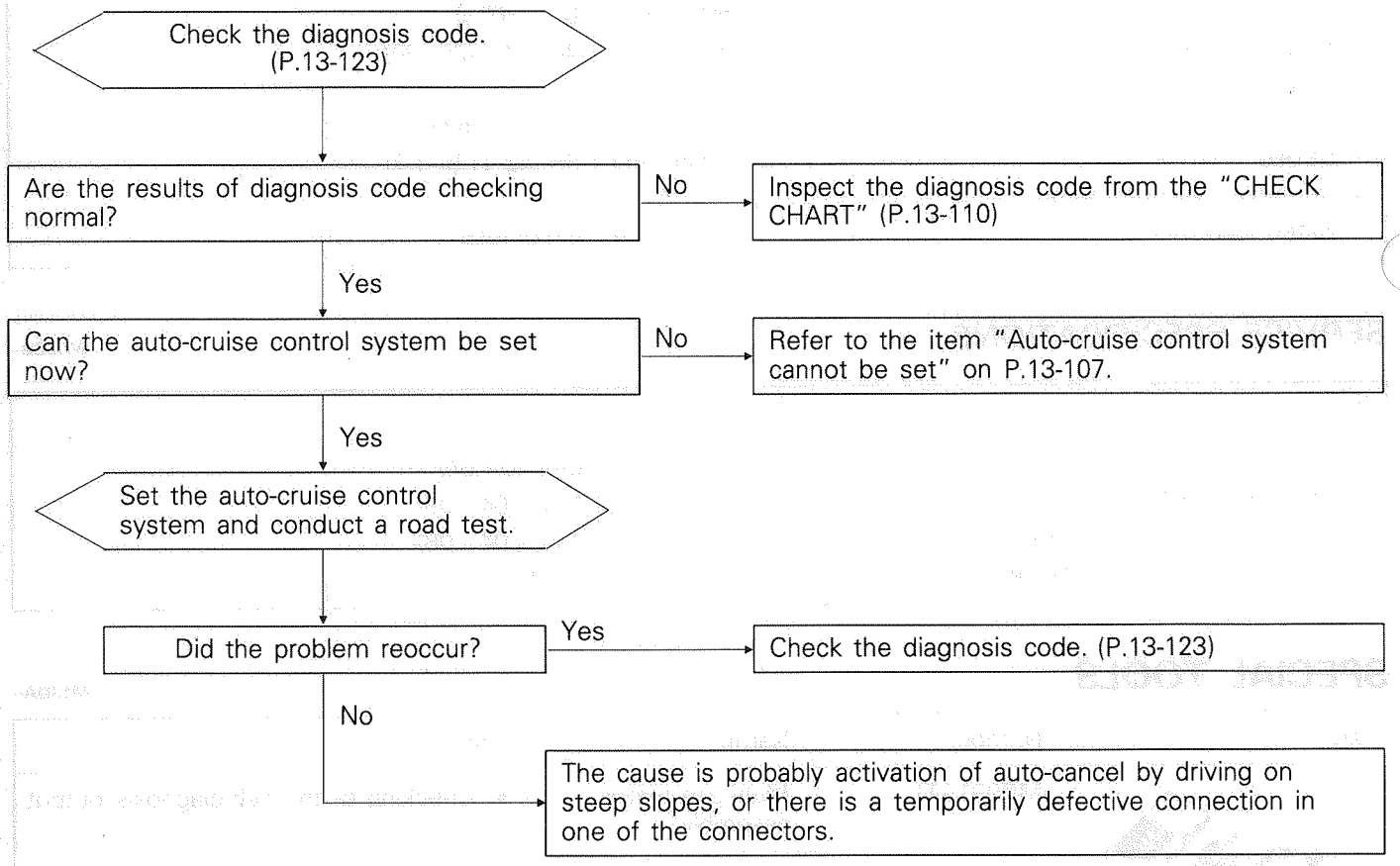

TSB Revision

Auto-cruise control system cannot be set.

NOTE
This chart is to be used, then, for troubleshooting if it is not possible to use the self-diagnosis for checking.

Prepare to conduct input checking. (P.13-124.)

Are the results of all input checks normals?

Yes

No

Check results	Probable cause	Remedy	Check chart No.
Code 21 remains even though SET switch is set to OFF.	SET switch ON malfunction	Replace the control switch.	No. 2
	SET switch input line short-circuit	Repair the harness.	
Code 22 remains even though RESUME switch is set to OFF.	RESUME switch ON malfunction	Replace the control switch.	No. 3
	RESUME switch input line short-circuit	Repair the harness.	
Code 23 remains even if the stop light switch is turned OFF by releasing the brake pedal.	Malfunction of stop light switch circuit.	Replace stop light switch or repair harness.	No. 7
Code 25 remains, and code 24 does not appear, even though vehicle speed reaches approximately 40 km/h (25 mph) or higher.	Malfunction of the vehicle-speed sensor circuit (damaged or disconnected wiring, or short-circuit)	Check or repair the vehicle speed sensor circuit.	No. 5
Code 26 remains even if the clutch switch is turned OFF by releasing the clutch pedal. <M/T>	Malfunction of clutch switch circuit.	Replace clutch switch or repair harness.	No. 8
Code 26 remains even if the selector lever is moved to anything but N, P. <A/T>	Malfunction of inhibitor switch circuit.	Replace inhibitor switch or repair harness.	No. 9
Code 27 remains even though CANCEL switch is set to OFF.	Malfunction of CANCEL switch circuit.	Replace the control switch or repair harness.	No. 4
Code 28 remains even if the accelerator is released.	Malfunction of throttle position sensor circuit.	Replace the sensor or repair harness.	No. 11
Code 29 remains even though the idle switch is set to ON.	Malfunction of idle switch circuit	Replace the switch or repair harness.	No. 11

Check the motor-driven vacuum pump circuit. (Go to check chart No. 6)

NOTE
If the results of the check of the motor-driven vacuum pump circuit (check chart No. 6) and actuator reveal no abnormal condition, replace the electronic control unit (ECU).

Trouble symptom	Probable cause	Check chart No.	Remedy
• The set vehicle speed varies greatly upward or downward. • "Hunching" (repeated alternating acceleration and deceleration) occurs after setting is made.	Malfunction of the vehicle speed sensor circuit	No. 5	Repair the vehicle speed sensor system, or replace the part.
	Malfunction of the speedometer cable or speedometer drive gear		
	Motor-driven vacuum pump circuit poor contact	No. 6	Repair the motor-driven vacuum pump or replace the part.
	Malfunction of the motor-driven vacuum pump		
	Malfunction of the ECU	—	Replace the ECU.
The auto-cruise control system is not canceled when the brake pedal is depressed.	Damaged or disconnected wiring of the stop light switch input circuit or stop light switch (for auto-cruise control) poor contact (short-circuit)	If the input check code No. 23 indicates a malfunction, see the check chart No. 7	Repair the harness or replace the stop light switch.
	Motor-driven vacuum pump drive circuit short-circuit	No. 6	Repair the harness or replace the motor-driven vacuum pump.
	Malfunction of the ECU	—	Replace the ECU.
The auto-cruise control system is not canceled when the clutch pedal is depressed. <M/T> (It is canceled, however, when the brake pedal is depressed.)	Damaged or disconnected wiring of clutch switch input circuit	If the input check code No. 23 indicates a malfunction, see the check chart No. 8	Repair the harness, or repair or replace the clutch switch.
	Clutch switch improper installation (won't switch ON)		
	Malfunction of the ECU	—	Replace the ECU.
The auto-cruise control system is not canceled when the selector lever is moved to the "N" position. <A/T> (It is canceled, however, when the brake pedal is depressed.)	Damaged or disconnected wiring of inhibitor switch input circuit	If the input check code No. 23 indicates a malfunction, see the check chart No. 9	Repair the harness, or repair or replace the inhibitor switch.
	Improper adjustment of inhibitor switch		
	Malfunction of the ECU	—	Replace the ECU.

Trouble symptom	Probable cause	Check chart No.	Remedy
Cannot decelerate by using the SET switch	Temporary damaged or disconnected wiring of SET switch input circuit	No. 2	Repair the harness or replace the control switch.
	Motor-driven vacuum pump circuit poor contact	No. 6	Repair the harness or replace the motor-driven vacuum pump.
	Malfunction of the auto-cruise actuator		
	Malfunction of the ECU	—	Replace the ECU.
Cannot accelerate or resume speed by using the RESUME switch.	Damaged or disconnected wiring, or short-circuit, of RESUME switch input circuit	No. 3	Repair the harness or replace the control switch.
	Motor-driven vacuum pump circuit poor contact	No. 6	Repair the harness or replace the motor-driven vacuum pump.
	Malfunction of the motor-driven vacuum pump		
	Malfunction of the ECU	—	Replace the ECU.
Auto-cruise control system can be set while traveling at a vehicle speed of less than 40 km/h (25 mph), or there is no automatic cancellation at that speed.	Malfunction of the vehicle-speed sensor circuit	No. 5	Repair the vehicle-speed sensor system, or replace the part.
	Malfunction of the speedometer cable or the speedometer drive gear		
	Malfunction of the ECU	—	Replace the ECU.
The indicator light of the main switch does not illuminate. (But auto-cruise control system is normal.)	Damaged or disconnected bulb of indicator light or malfunction of the main switch	—	Repair the harness or replace the main switch.
	Harness damaged or disconnected		
Overdrive is not canceled during fixed speed driving. <A/T>	Malfunction of circuit related to overdrive cancelation, or malfunction of ECU	No. 10	Repair the harness or replace the part.
No shift to overdrive during manual driving. <A/T>			

CHECK CHART

1. CHECKING THE CONTROL UNIT POWER SUPPLY CIRCUIT

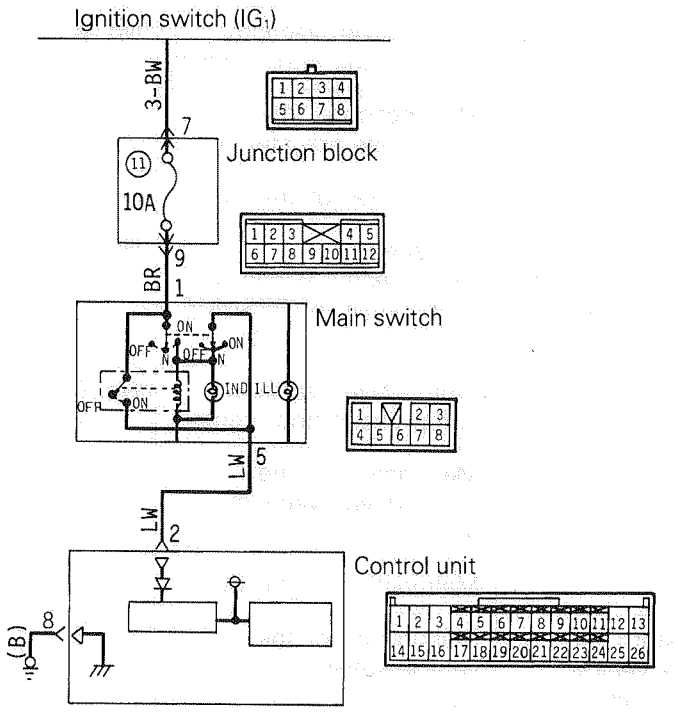

Description of operation

When the main switch is switched ON while the ignition switch is ON, current flows to the ignition switch (IG_1), to fuse No. 11 of the junction block, and to the main switch, the control unit, and to ground. When the ignition switch is turned off, the main switch is also turned off.

Troubleshooting hint

ECU terminal voltage

Terminal No.	Signal	Conditions	Terminal voltage
2	Control unit power supply	When the main switch is switched ON	System voltage
8	Control unit ground	At all times	0 V

2. CHECKING THE SET SWITCH CIRCUIT

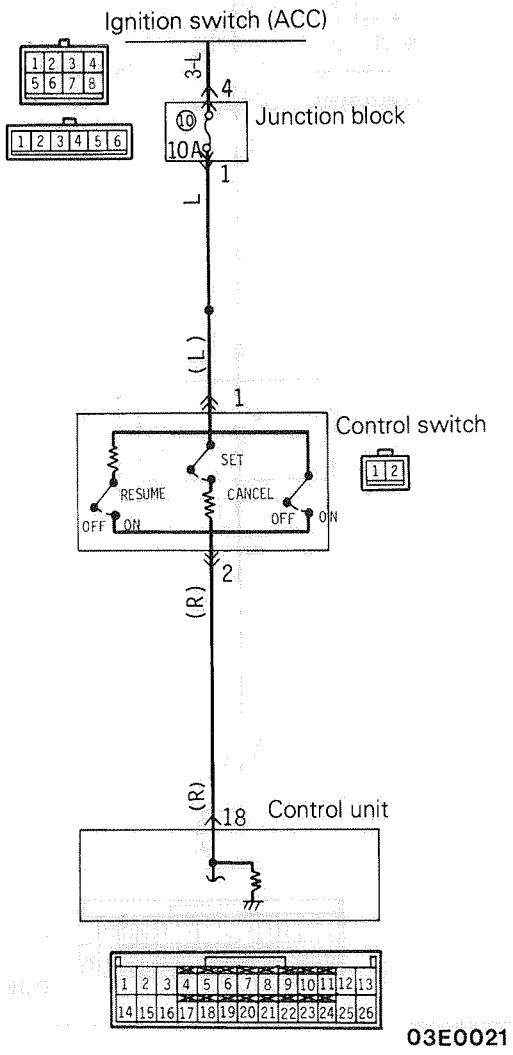

Description of operation

When driving at the desired speed [40–145 km/h (25–90 mph) and the main switch of the auto-cruise control system is pressed to ON, by turning the control switch to SET, the vehicle speed at this time will become the constant driving speed. Also, during constant speed driving, if the control switch is held continuously in the SET position, the vehicle speed will gradually decrease (COAST), and when the control switch is released, the speed at that time will be the constant driving speed. Current flows to fuse No. 4 of the junction block, to the control switch (SET) and to the control unit.

Troubleshooting hint

Diagnosis–No. 15 (automatically cancelled)

ECU terminal voltage

Terminal No.	Signal	Conditions	Terminal voltage
18	SET switch	When the control switch is turned to the SET position	3 V
		When the control switch is turned to the off position	0 V

TSB Revision

3. CHECKING THE RESUME SWITCH CIRCUIT

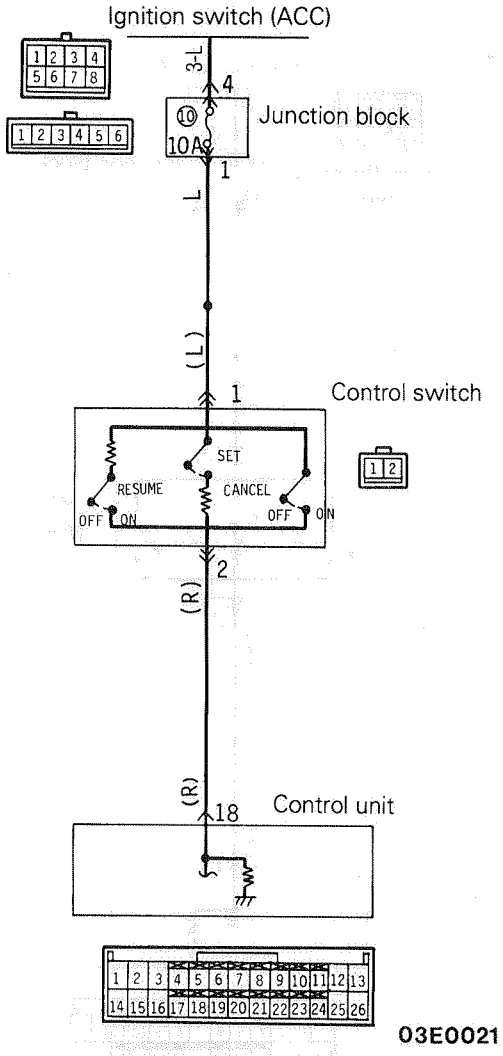

Description of operation

The set speed (before cancellation) resumes when the control switch is turned to RESUME position, even if the constant-speed control has been cancelled.
That speed will not resume, however, even if the control switch is turned to RESUME position, if the main switch is switched OFF and if the vehicle speed decreases to 40 km/h (25 mph) or lower.

In addition when the control switch is turned to RESUME position and held while the vehicle is traveling at a constant speed the vehicle speed will increase the speed at which the switch is subsequently released will become the newly set constant speed.
Current flows to the fuse No. 4 of the junction block, to the control switch (RESUME), and to the control unit.

Troubleshooting hint

Diagnosis–No. 5 (automatically cancelled)

ECU terminal voltage

Terminal No.	Signal	Conditions	Terminal voltage
18	RESUME switch	When the control switch is turned to the RESUME position	6 V
		When the control switch is turned to the off position	0 V

TSB Revision

4. CHECKING THE CANCEL SWITCH CIRCUIT

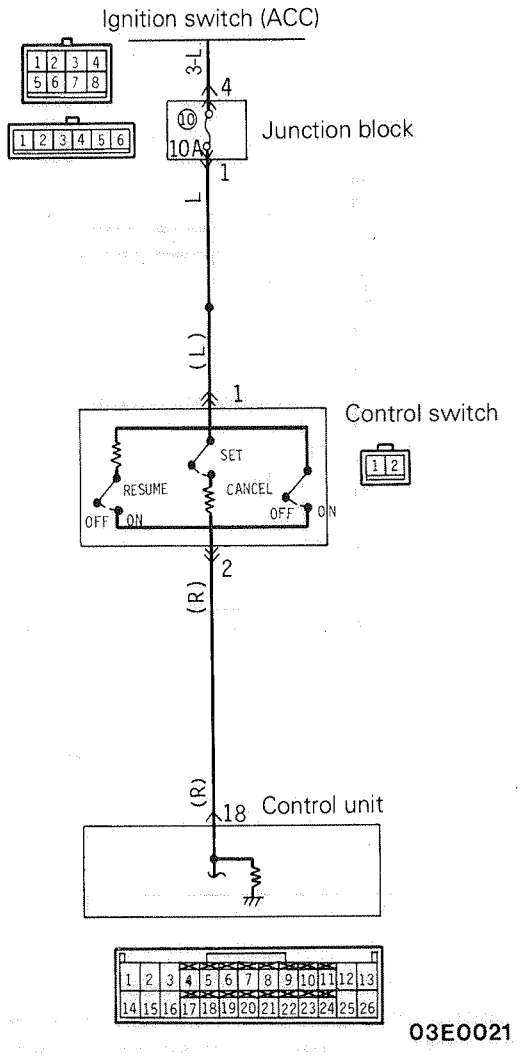

Description of operation

During constant speed driving, when the control switch is turned to the CANCEL position, a cancel signal is sent to the control unit, the current to the motor-driven vacuum pump is stopped, and constant speed driving is cancelled.
Current flows to the fuse No. 4 of the junction block, to the control switch (CANCEL) and to the control unit.

Troubleshooting hint

Diagnosis–No. 15 (automatically cancelled)

ECU terminal voltage

Terminal No.	Signal	Conditions	Terminal voltage
18	CANCEL switch	When the control switch is turned to the CANCEL position	System voltage
		When the control switch is turned to the off position	0 V

TSB Revision

5. CHECKING THE VEHICLE-SPEED SENSOR CIRCUIT

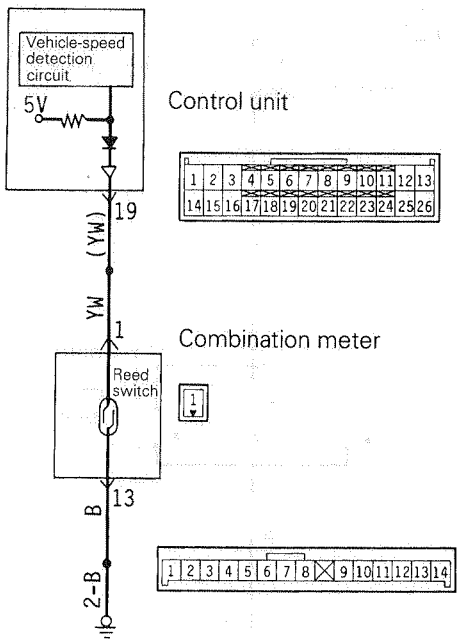

03E0019

Description of operation

The vehicle-speed sensor is installed within the speedometer; it sends to the control unit pulse signals that are proportional to the rotation speed (i.e., the vehicle speed) of the transmission's output gear.
This vehicle-speed sensor is the reed switch type of sensor; it generates four pulse signals for each rotation of the speedometer's driven gear.

Troubleshooting hint

Diagnosis–No. 12 (automatically cancelled)

ECU terminal voltage

Terminal No.	Signal	Conditions	Terminal voltage
19	Vehicle-speed sensor	Set the shift lever to the 1st range <M/T> or the selector lever to D-range <A/T>, move the vehicle forward slowly.	0 V– 2 V or 0.6 V ← Flashing → higher

6. CHECKING THE MOTOR-DRIVEN VACUUM PUMP CIRCUIT

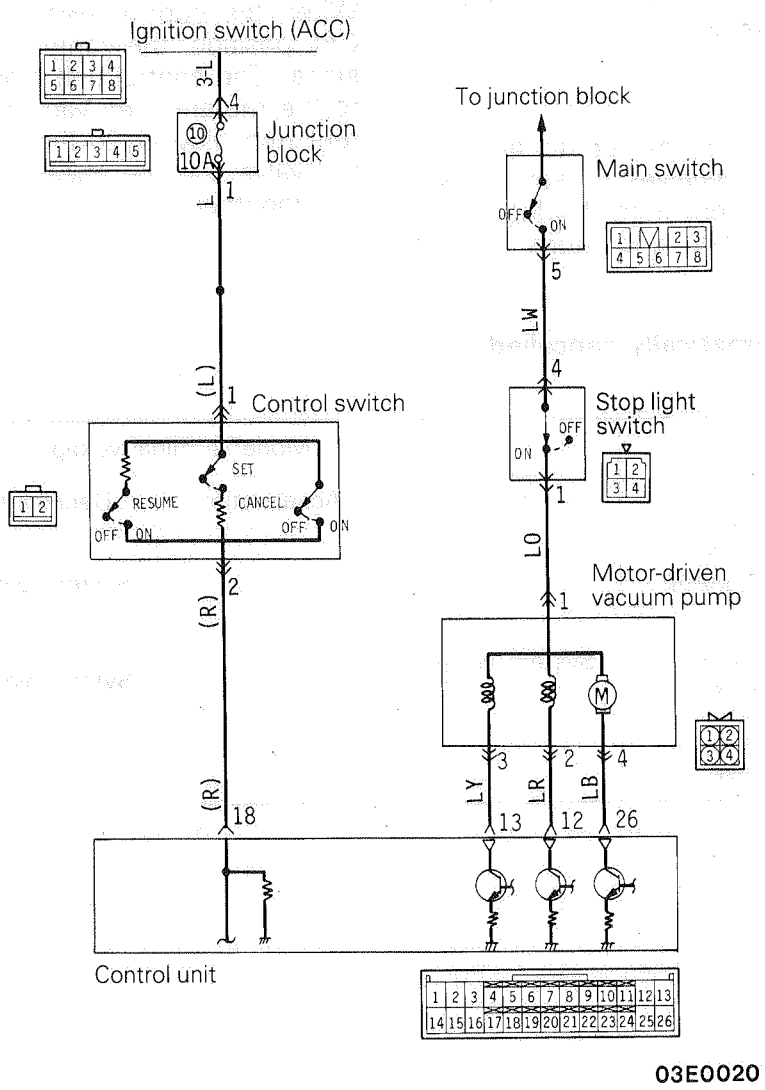

Description of operation

HOLD MODE

When driving at 40 km/h (25 mph) and the main switch is pressed to ON and the control switch is turned to the SET position, the control unit receives a "set" signal. The control unit stops current from flowing to the motor-driven vacuum pump, and makes current flow to the solenoid coils in the control valve and the release valve to close both valves together.

Also, after reaching the desired speed, the motor-driven vacuum pump and the control valve turn ON and OFF repeatedly according to the driving conditions.

ACCELERATION MODE

When the control switch is moved to the RESUME position, the control unit receives a "resume" signal. The control unit controls current flow to the motor-driven vacuum pump, and controls current flow to the solenoid coils in the control valve and the release valve to close both valves together.

DECELERATION MODE

When the control switch is moved to the SET position, the control unit receives a "set" signal. The control unit stops current from flowing to the motor-driven vacuum pump, and stops current from flowing to the solenoid coil in the control valve to open the valve. At the same time, the current flowing to the solenoid coil in the release valve is stopped, closing the valve.

RELEASE MODE

When the control switch is moved to the CANCEL position, the control unit receives a "cancel" signal. The control unit stops current from flowing to the motor-driven vacuum pump, and stops current from flowing to the solenoid coils in the control valve and the release valve to open both valves together.

Troubleshooting hint

Diagnosis–No. 11 (automatically cancelled)

ECU terminal voltage

Terminal No.	Signal	Mode/Terminal voltage (V)			
		Hold	Acceleration	Deceleration	Release
26	Motor-driven vacuum pump drive	System voltage	0	System voltage	System voltage
13	Control valve open/close		0	System voltage	System voltage
12	Release valve open/close		0	0	System voltage

7. CHECKING THE STOP LIGHT SWITCH CIRCUIT

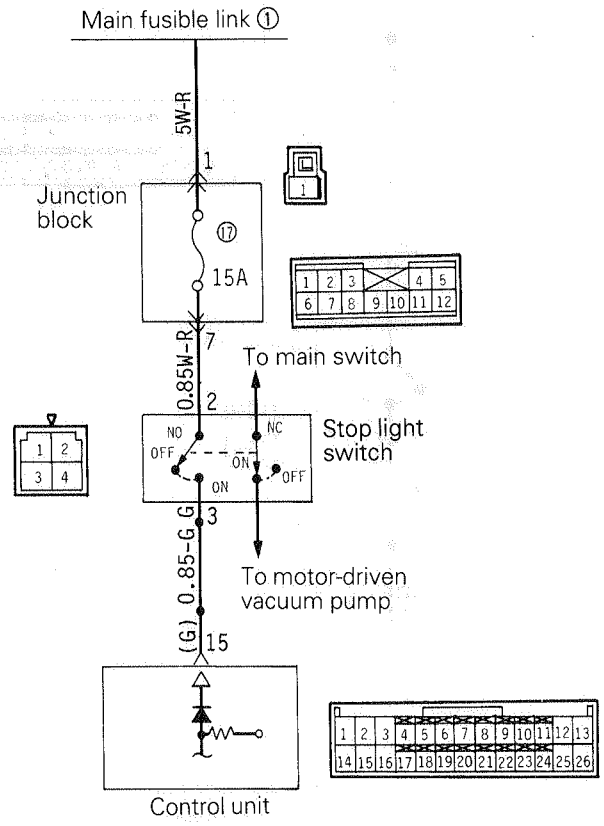

NOTE
(1) NC: ON at all times
(2) NO: OFF at all times

Description of operation

When the brake pedal is depressed during constant-speed travel, the stop light switch's (NC) contacts for the auto-cruise control system open, with the result that the current to the motor-driven vacuum pump is interrupted, thus cancelling the constant-speed travel.

At the same time, moreover, the closing of the (NO) contacts for the stop light results in the sending of the cancel signal to the control unit, so that the motor-driven vacuum pump current is discontinued within the control unit, thereby cancelling the constant-speed travel.

Troubleshooting hint

ECU terminal voltage

Terminal No.	Signal	Conditions	Terminal voltage
15	Stop light switch (load side)	When the brake pedal is depressed	System voltage
		When the brake pedal is not depressed	0 V

TSB Revision

8. CHECKING THE CLUTCH SWITCH CIRCUIT <M/T>

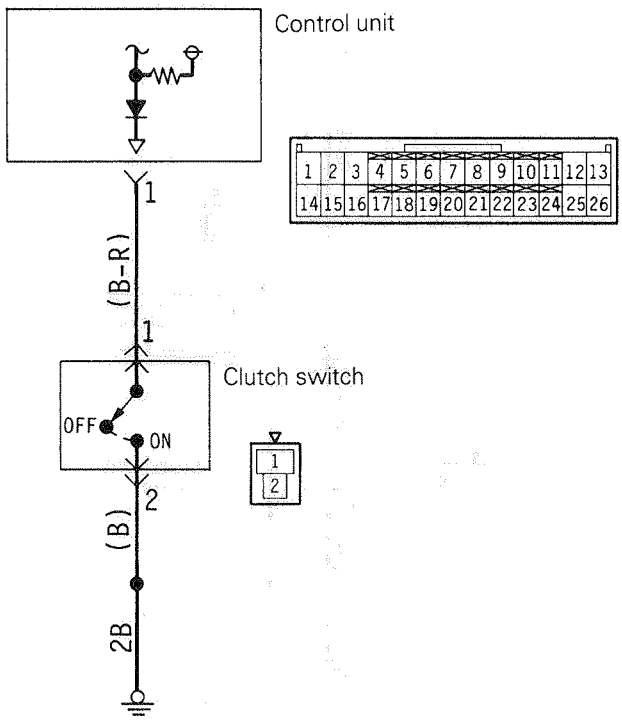

03E0018

Description of operation

If the clutch pedal is pressed when driving at a constant speed, the clutch switch is turned ON and a cancel signal is input to the control unit and the determined driving speed is canceled, because the current flows to the control unit, to the clutch switch and to the ground.

Troubleshooting hint

ECU terminal voltage

Terminal No.	Signal	Conditions	Terminal voltage
1	Clutch switch	When the clutch pedal is depressed	System voltage
		When the clutch pedal is not depressed	0 V

9. CHECKING THE INHIBITOR SWITCH CIRCUIT <A/T>

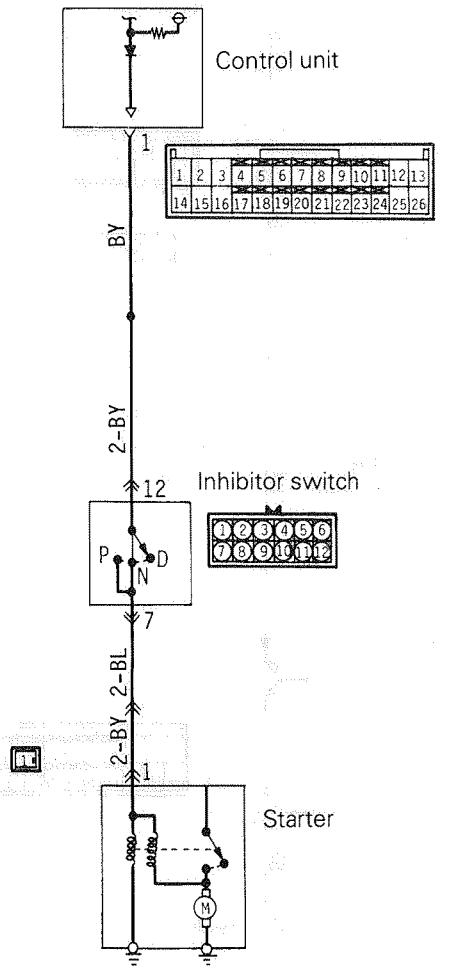

Description of operation

The inhibitor switch also functions as the switch for the starter.
If the selector lever is moved to the "N" position during constant-speed travel, current flows to the control unit, inhibitor switch, starter motor, and to ground; the cancel signal is therefore input to the control unit, thus canceling the constant-speed travel.

Troubleshooting hint

ECU terminal voltage

Terminal No.	Signal	Conditions	Terminal voltage
1	Inhibitor switch	Neutral	System voltage

10. CHECKING THE CIRCUIT RELATED TO THE OVERDRIVE-CANCELLATION FUNCTION <A/T>

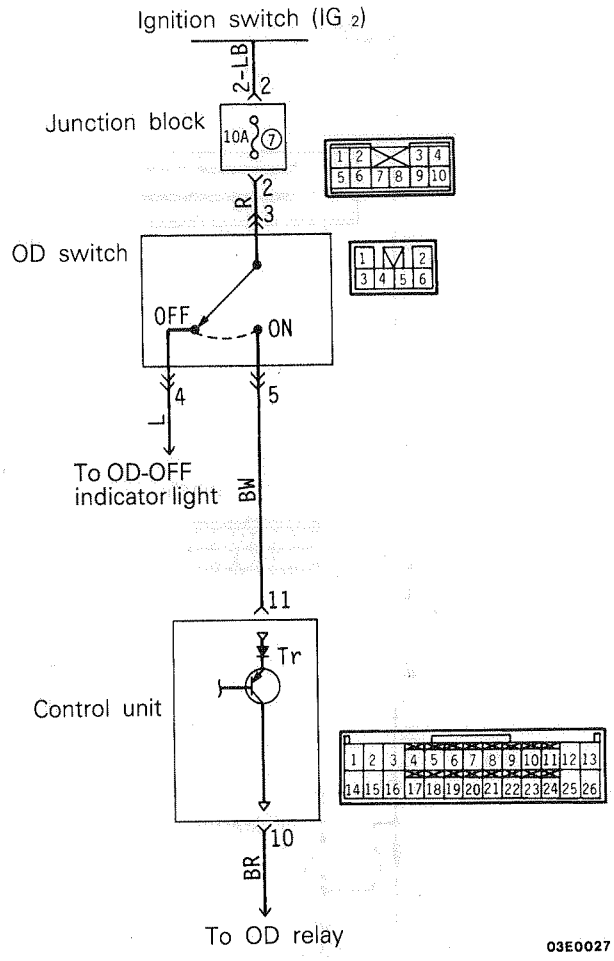

Description of operation

This is a function that cancels the overdrive function for a certain fixed period of time, if during constant-speed travel in overdrive, the actual vehicle speed decreases to less than the vehicle speed retained in the memory, and then after a short time causes the vehicle speed to return to the vehicle speed retained in the memory.

Overdrive will be cancelled in the following cases:

- If the control switch is turned to the RESUME position.
- If the actual vehicle speed decreases to 7 km/h (4.4 mph) or more below the constant driving speed.

In these case, the OD-ON signal output from the control unit turns the transistor Tr off, and so the current flowing through the overdrive switch is stopped at the transistor Tr, and is then controlled by the 3-speed automatic transmission.

Troubleshooting hint

ECU terminal voltage

Terminal No.	Signal	Conditions	Terminal voltage
11	OD switch	When the OD switch is switched ON	System voltage

TSB Revision

11. CHECKING THE THROTTLE POSITION SENSOR AND IDLE SWITCH CIRCUIT

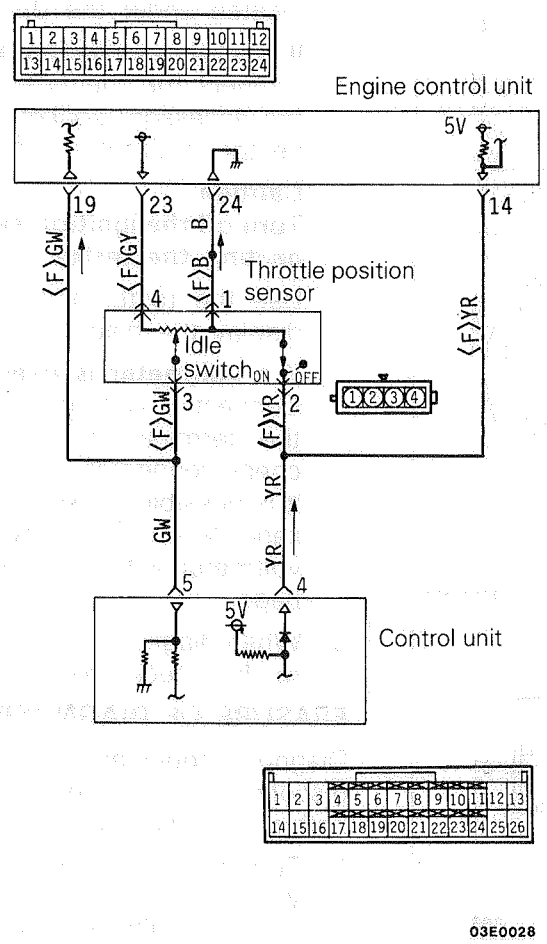

Description of operation

The throttle position sensor and idle switch are mounted in the throttle body and are sensors in the MPI system
The throttle position sensor converts the opening position of the throttle valve to a voltage value, and inputs it to the control unit. The control unit compares this signal with the vehicle speed signal and changes the amount of actuator control accordingly. The idle switch turns ON and OFF depending on the voltage value from the throttle position sensor to compensate for fluctuations or deviations in the voltage.

Diagnosis–No. 17 (automatically cancelled)

ECU terminal voltage

Terminal No.	Signal	Conditions	Terminal voltage
4	Idle switch	When accelerator pedal is pressed	4.5–5.5 V
		When accelerator pedal is released	0 V
5	Throttle position sensor	When accelerator pedal is pressed all the way down	4.0–5.5 V
		When accelerator pedal is released	0.5–0.7 V

TSB Revision

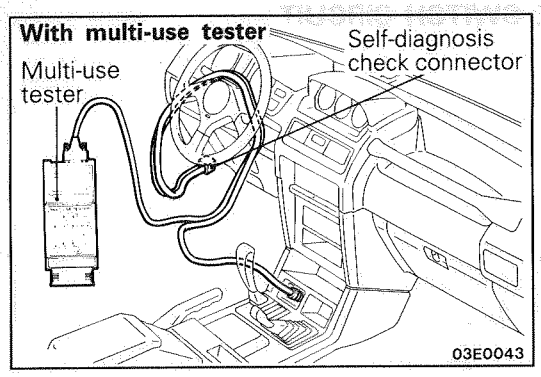

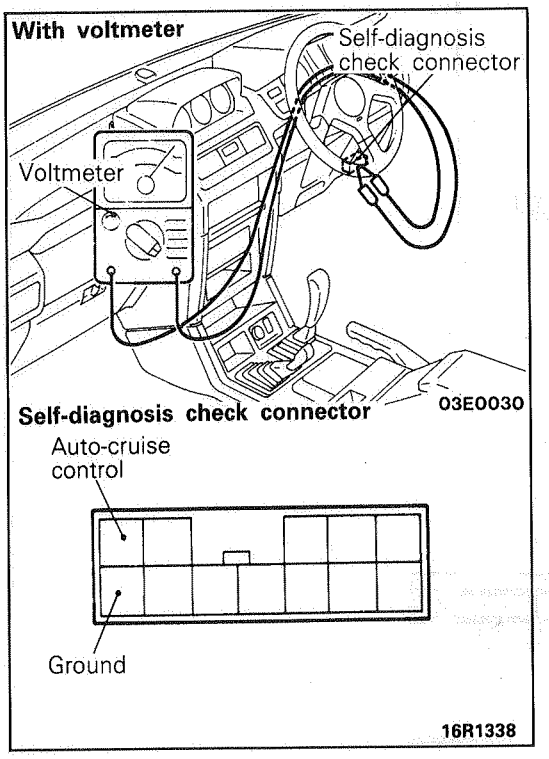

SELF-DIAGNOSIS CHECKING

Self-diagnosis checking is performed when there has been an automatic cancellation, without cancel switch operation.

(1) The following two methods can be used for checking the diagnosis. Note that the diagnosis check connector is located under the driver's side instrument panel.

If a multi-use tester is used

Connect the multi-use tester's socket and connector to the accessory socket and the self-diagnosis check connector, and set the tester.

Caution

Turn off the ignition switch when connecting or disconnecting the tester.

Use the tester according to its operation instructions; display the diagnosis code number and then check.

If a voltmeter is used

Connect a voltmeter between the ground terminal and the terminal for auto-cruise control of the diagnosis check connector.

It is possible to discover which circuit is the cause of the cancellation by verifying the indication shown by the voltmeter with the display patterns shown on the next page.

(2) When diagnosis code No. is displayed, check by referring to the check chart applicable to that number.

ERASURE OF DIAGNOSIS CODE

Diagnosis codes are memorized until battery power source is disconnected. It, however, can be erased without removing battery terminal by the following procedure.

1. Turn the ignition switch to ON.
2. With the control switch at the SET position, turn the main switch to ON and set the control switch to RESUME within 1.0 second.
3. Set the control switch to SET again and keep the stop light switch more than 5.0 seconds in SET condition.
4. Check the self-diagnosis code, and check that the abnormal code is erased and normal code is output.

DIAGNOSIS DISPLAY PATTERNS AND CODES

Code No.	Display patterns (output codes) (Use with voltmeter)	Probable cause	Check chart No.
11		Abnormal condition of motor-driven vacuum pump system	No. 6
12		Abnormal condition of vehicle-speed signal system	No. 5
15		Control switch malfunction (when SET and RESUME switches switched ON simultaneously.)	No. 2, 3
16		Abnormal condition of ECU	No. 7, 8, 9
17	 12A0104	Abnormal condition of throttle position sensor Abnormal condition of idle switch	No. 11

NOTE

1. These diagnosis codes are displayed when the main switch is ON and the vehicle is not driving at constant speed.

Display when vehicle speed is less than approximately 20 km/h (12 mph) or higher, or before the auto-cruise control system is set



12A0104

2. After the diagnosis codes in the memory are erased, if (when the power supply of the control unit is switched ON once again) the power supply of the control unit is normal, the diagnosis output code display will be as below, regardless of whether the system condition is normal or not.
   ① If a multi-use tester is used:
   "NORMAL!!" will be displayed.
   ② If a voltmeter is used:
   Continuous ON/OFF signals will be displayed at 0.5 second intervals.
   (Refer to the figure at the left.)

INPUT CHECKING

Input checks should be made when the auto-cruise control system cannot be set and when it is necessary to check (when a malfunction related to the auto-cruise control system occurs) whether or not the input signals are normal.

NOTE
1. Self-diagnosis terminal outputs display patterns.
2. Display codes are displayed only if the circuit is normal according to the conditions shown in the "Input Check Table".

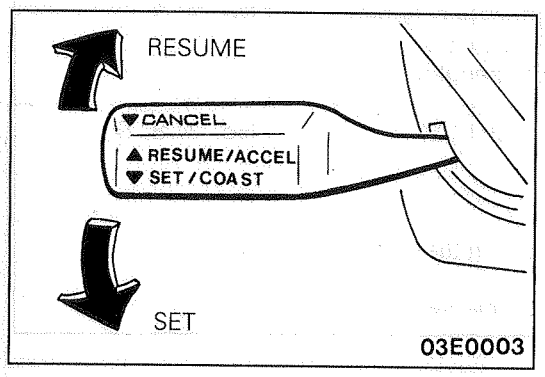

Carry out input checking by the following procedure:

(1) The setting of the multi-use tester is the same as for self-diagnosis check.
(2) Turn the ignition switch to ON.
(3) When the control switch is moved to the SET position, press the main switch to ON, and within 1 second, turn the control switch to RESUME to display the results of input checking.

(4) Perform each input operation according to the Input Check Table and read the codes.

NOTE
1. If two or more input operations are performed at the same time, the codes will be output in order starting from the lowest number.
2. Each code will be displayed in order of priority beginning from No. 1.
   If there is no display, it is possible that there is a malfunction of the ECU power-supply circuit or the SET and/or RESUME switch (control switch), so check according to check chart 1, 2 and 3.

INPUT CHECK TABLE

Check No.	Input operation	Code No.	Display patterns (output codes) (with voltmeter)	Check results
1	SET switch ON	21		SET switch circuit normal
2	RESUME switch ON	22		RESUME switch circuit normal
3	Stop light switch (brake pedal depressed)	23		Stop light switch normal
4	Driving at approximately to 40 km/h (25 mph) or higher	24		When both No. 4 and No. 5 can be confirmed, vehicle-speed sensor circuit normal.
5	Driving at less than approximately to 40 km/h (25 mph)	25		
6	1. Clutch switch ON (clutch pedal depressed) <M/T> 2. Inhibitor switch ON (selector lever to "N" range) <A/T>	26		Clutch switch or inhibitor switch normal
7	CANCEL switch ON	27		CANCEL switch circuit normal
8	Throttle position sensor output (when the accelerator pedal is pressed more than half way)	28		Throttle position sensor normal
9	Idle switch OFF (accelerator pedal depressed)	29	 12A0107	Idle switch normal

SERVICE ADJUSTMENT PROCEDURES

CONTROL CABLES INSPECTION AND ADJUSTMENT

M13FFDB

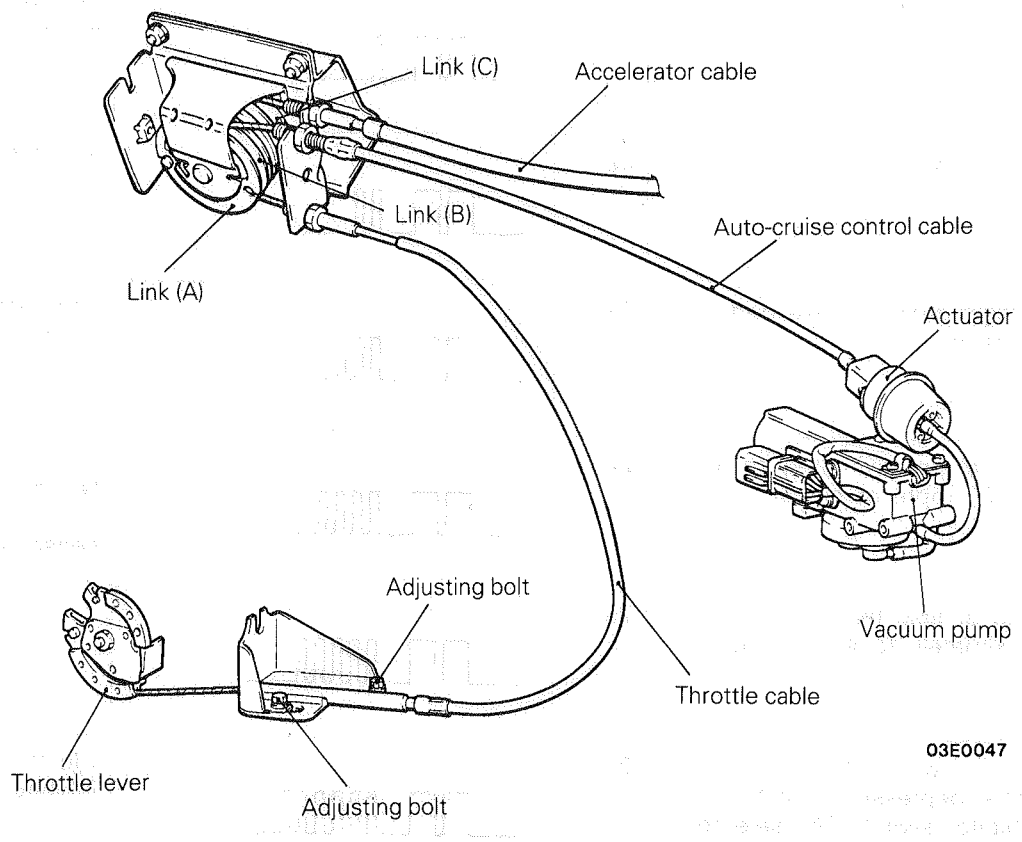

(1) Remove the link protector. (Refer to P.13-131.)
(2) Check if there is any flexion in the inner cables of the accelerator cable, auto-cruise control cable and throttle cable.
If there is excessive flexion or no play in one of the inner cables, loosen the adjusting bolts and nuts of the throttle lever and each link to release each link from the throttle lever.
(Do not remove the adjusting bolts or nuts.)

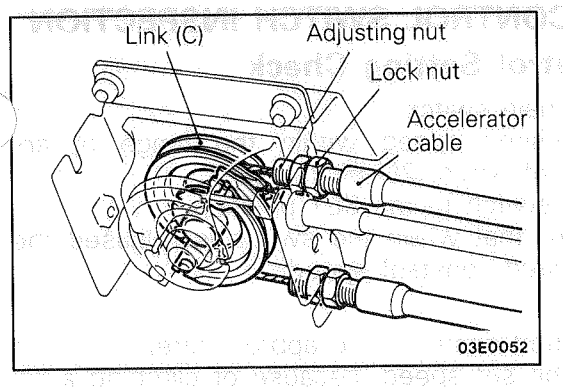

Accelerator Cable

(1) While holding link (C) so that it is touching the stopper, adjust the play of the accelerator cable with the adjusting nut so that the cable play is at the standard value.

Standard value: 0–1 mm (0–.04 in.)

(2) After adjusting, fix the cable with the lock nut.

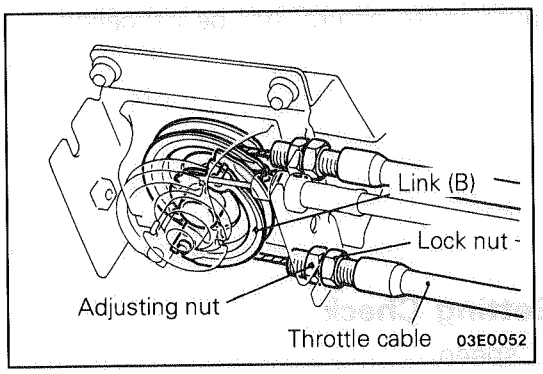

Throttle Cable

(1) While holding link (B) so that it is touching link (C), adjust the play of the throttle cable with the adjusting nut and adjusting bolts <throttle lever side> so that the cable play is at the standard value.

Standard value: 1–2 mm (.04–.08 in.)

(2) After adjusting, fix the cable with the lock nut.

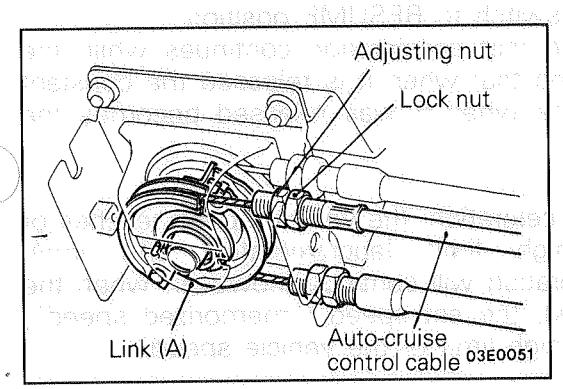

Auto-cruise Control Cable

(1) While holding link (A) so that it is touching link (B), adjust the play of the auto-cruise control cable with the adjusting nut so that the cable play is at the standard value.

Standard value: 1–2 mm (.04–.08 in.)

(2) After adjusting, fix the cable with the lock nut.

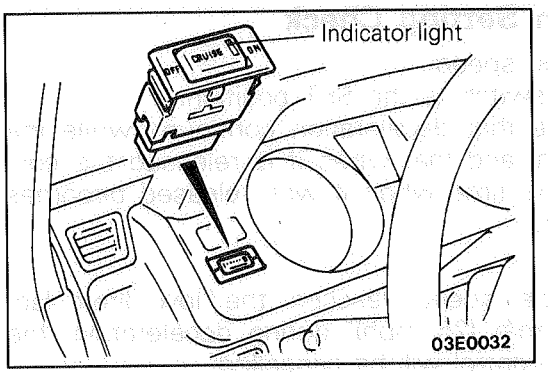

AUTO-CRUISE CONTROL MAIN SWITCH INSPECTION

(1) Turn the ignition key to ON.
(2) Check to be sure that the indicator light within the switch illuminates when the main switch is switched ON.

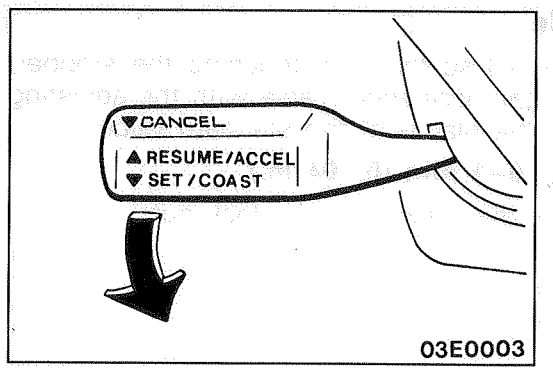

AUTO-CRUISE CONTROL SWITCH INSPECTION

Auto-cruise Control Setting Check

(1) Switch ON the main switch.
(2) Drive at the desired speed within the range of approximately 40–145 km/h (25–90 mph).
(3) Turn the control switch to the SET position.
(4) Check to be sure that when the switch is released the speed is the desired constant speed.

NOTE
If the vehicle speed decreases to approximately 15 km/h (9 mph) below the set speed, because of climbing a hill for example, the auto-cruise control will be cancelled.

Speed-increase Setting Check

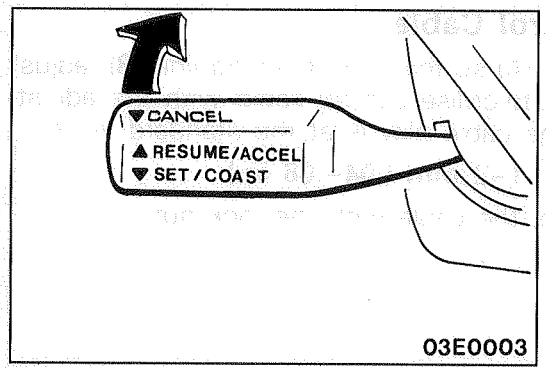

(1) Set to the desired speed.
(2) Turn the control switch to RESUME position.
(3) Check to be sure that acceleration continues while the switch is hold, and that when it is released the constant speed at the time when it was released becomes the driving speed.

NOTE
Even if, during acceleration, the vehicle speed reaches or exceeds the high limit [approximately 145 km/h (90 mph)], acceleration will continue, however, when the switch is released, the set speed ("memorized speed") will become the high limit of the vehicle speed.

Speed Reduction Setting Check

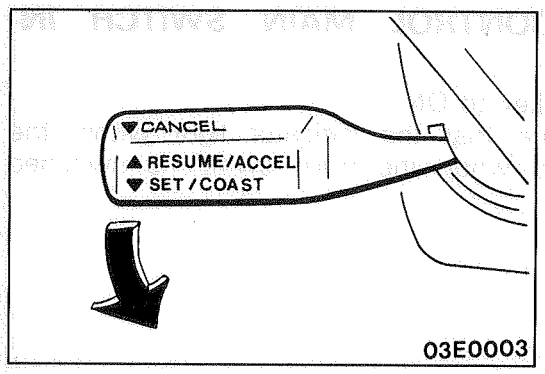

(1) Set to the desired speed.
(2) Turn the control switch to the SET position.
(3) Check to be sure that deceleration continues while the switch is pressed, and that when it is released the constant speed at the time when it was released becomes the driving speed.

NOTE
When the vehicle speed reaches the low limit [approximately 40 km/h (25 mph)] during deceleration, the automatic speed control will be cancelled.

Auto-cruise Control Cancellation Check and Check of Return to the Set Speed before Cancellation

(1) Set the auto-cruise speed control.
(2) Check to be sure that there is a return to ordinary driving when either of the operations below is performed.

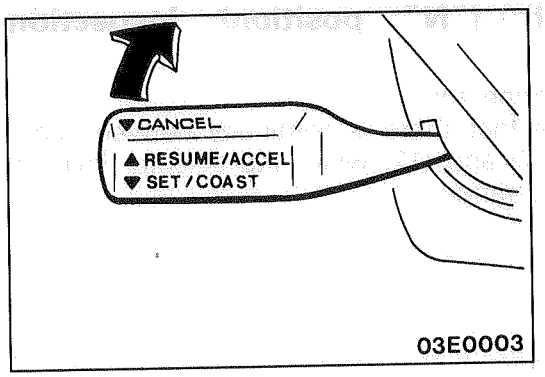

① The auto-cruise control switch is turned to the CANCEL position.
② The brake pedal is depressed.
③ The clutch pedal is depressed. <M/T>
④ The selector lever is moved to the "N" range. <A/T>

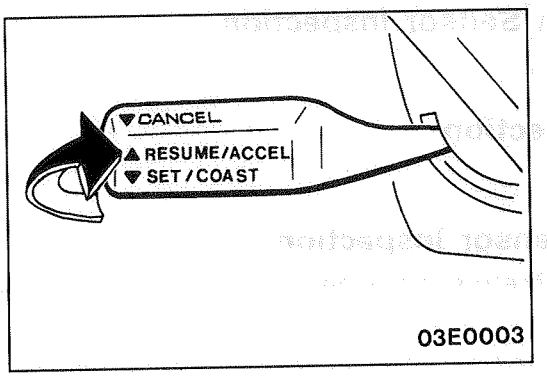

(3) Turn the control switch to RESUME position while driving at a vehicle speed of approximately 40 km/h (25 mph) or higher, and check to be sure that there is a return to the auto-cruise control speed before it will be cancelled and the vehicle will travel at the constant speed.
(4) When driving at constant speed and the main switch is turned to OFF, check that the vehicle returns to normal driving conditions.

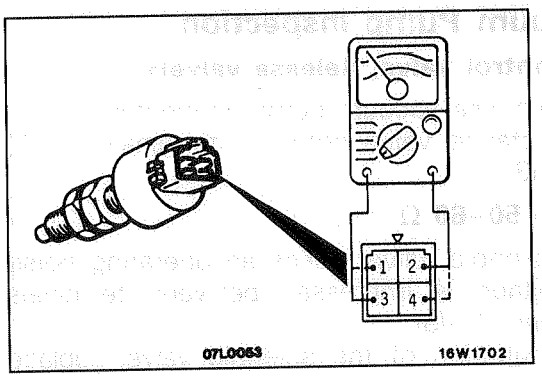

INDIVIDUAL PARTS INSPECTION

Stop Light Switch/Brake Switch Inspection

(1) Disconnect the connector.
(2) Check for continuity between the terminals of the switch.

○—○: continuity

Switch / Terminal / Measurement conditions	Brake switch		Stop light switch	
	1	4	2	3
When brake pedal depressed.			○—○	
When brake pedal not depressed.	○—○			

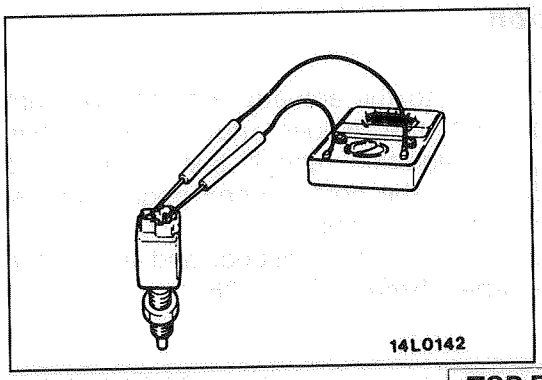

Clutch Switch Inspection <M/T>

(1) Disconnect the connector.
(2) Check to be sure that there is continuity between connector terminals when the clutch pedal is depressed.

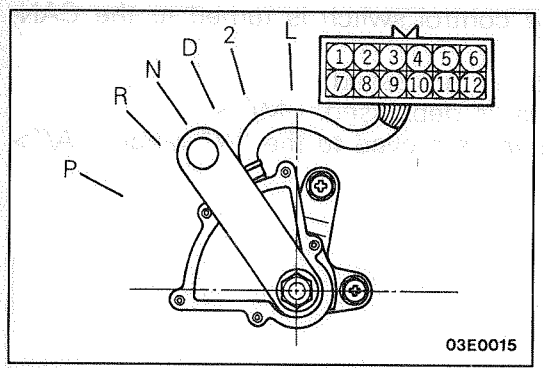

Inhibitor Switch ("N" position) Inspection <A/T>

(1) Disconnect the connector.
(2) Check to be sure that there is continuity between connector terminals (7) and (12) when the selector lever is moved to the "N" range.

Throttle Position Sensor Inspection

Refer to P.13-28

Idle Switch Inspection

Refer to P.13-28.

Vehicle-speed Sensor Inspection

Refer to GROUP 54 – Meters and Gages.

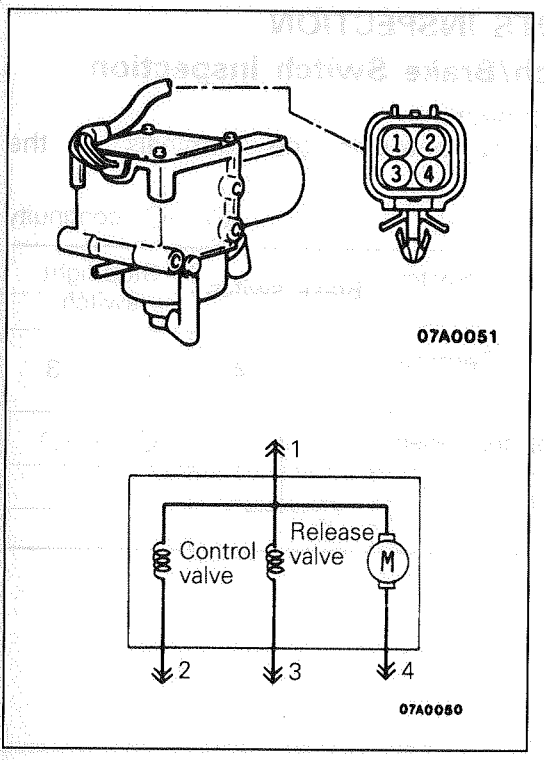

Auto-cruise Vacuum Pump Inspection

<Solenoid valve (Control valve, Release valve)>

(1) Remove the auto-cruise vacuum pump connector.
(2) Measure the resistance value between terminals (1)–(2) and between (1)–(3).

Standard value: 50–60 Ω

(3) Check that the solenoid valve makes an operating noise when battery voltage is impressed between terminals (1)–(2) and between (1)–(3).
(4) If there is a malfunction of the solenoid valve, replace the auto-cruise vacuum pump assembly.

<Motor>

(1) Remove the auto-cruise vacuum pump connector.
(2) Check that the motor revolves when battery voltage is applied between terminals (1)–(4).

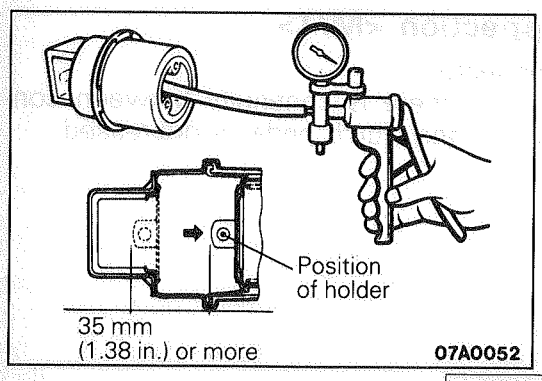

Actuator Inspection

(1) Remove the actuator.
(2) Apply negative pressure to the actuator with the vacuum pump and check that the holder moves more than 35 mm (1.38 in.). In addition, check that there is no change in the position of the holder when negative pressure is maintained in that condition.
(3) First install the actuator and then inspect and adjust the auto-cruise control cable. (Refer to P.13-126.)

AUTO-CRUISE CONTROL

REMOVAL AND INSTALLATION <LINK AND ACTUATOR>

M13TD--

Post-installation Operation
- Control Cables Adjustment (Refer to P.13-126.)

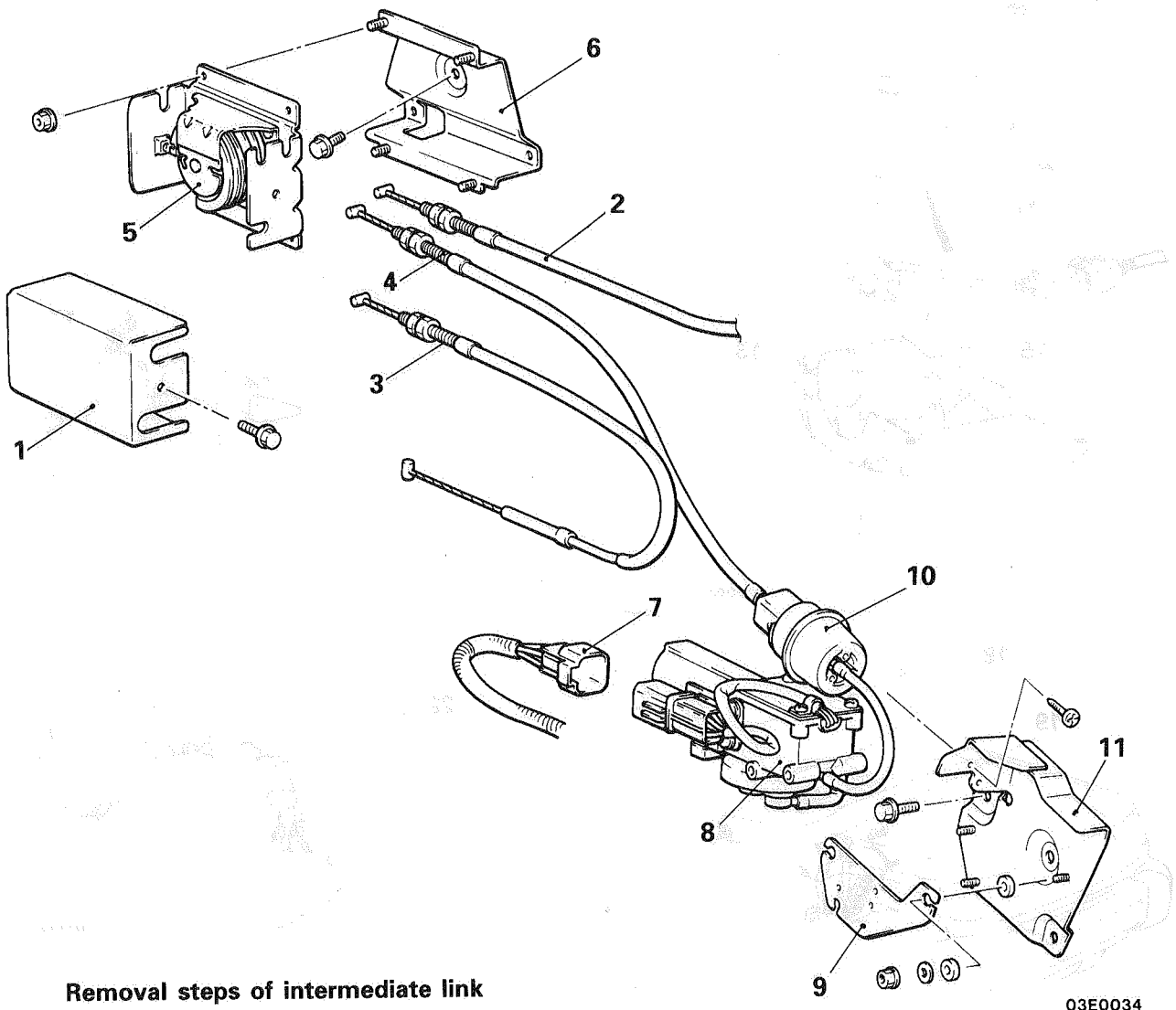

03E0034

Removal steps of intermediate link

1. Link protector
2. Connection for accelerator cable and link
3. Connection for throttle cable and link
4. Connection for auto-cruise control cable and link
5. Intermediate link
6. Link bracket

Removal steps of actuator

4. Connection for auto-cruise control cable and link
7. Wiring connector
8. Vacuum pump
9. Pump bracket
10. Actuator
11. Actuator bracket

REMOVAL AND INSTALLATION <SWITCHES, CONTROL UNIT AND SENSORS>

M13TD-A

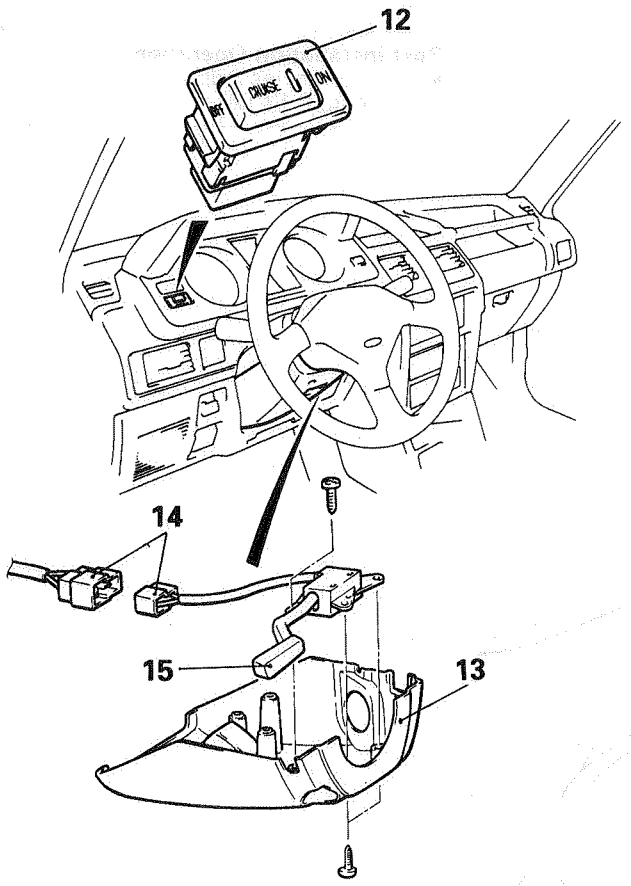

03E0033

Removal steps of switches

12. Main switch
13. Steering column lower trim
14. Wiring connectors
15. Control switch

Removal steps of control unit

16. Instrument panel
    (Refer to GROUP 52 – Instrument Panel.)
17. Control unit

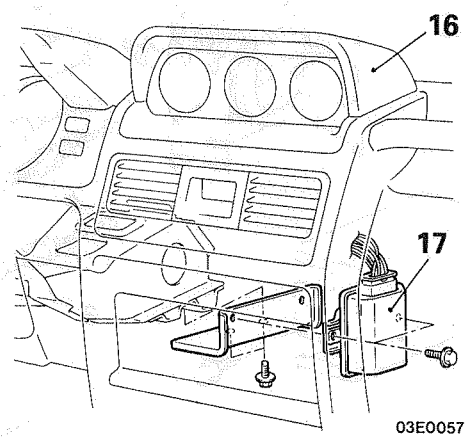

03E0057

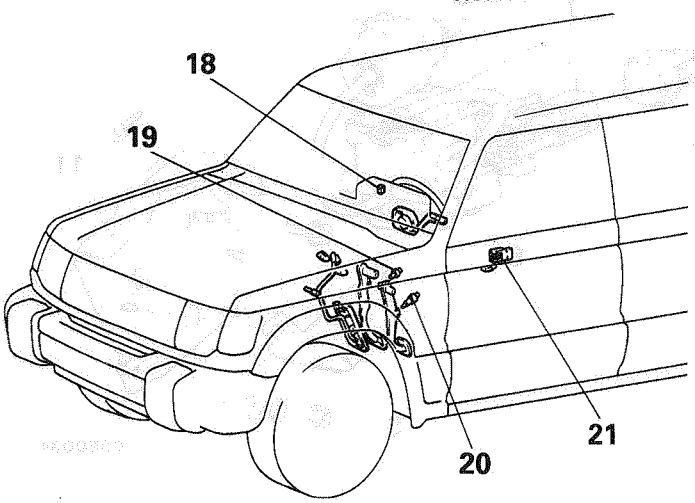

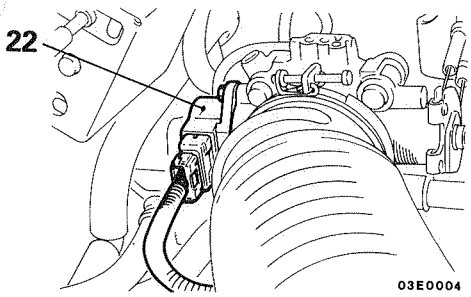

03E0004

Removal steps of sensors

18. Vehicle speed sensor (reed switch)
    (Refer to GROUP 54 – Meters and Gages.)
19. Stop light switch
20. Clutch switch <M/T>
21. Inhibitor switch <A/T>
22. TPS (Throttle position sensor)

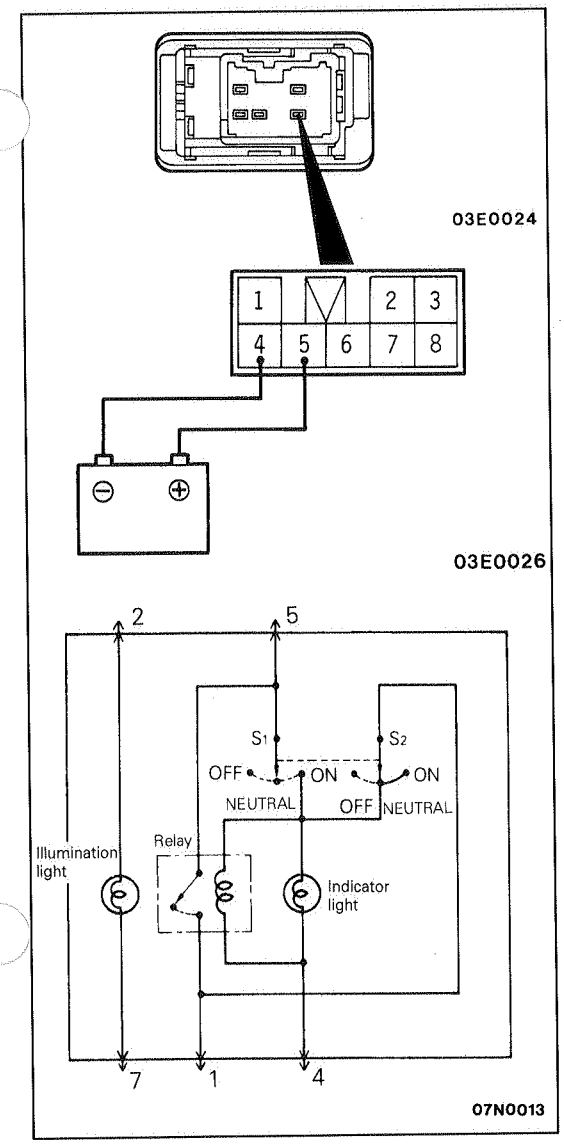

INSPECTION

M13TDCG

AUTO-CRUISE CONTROL MAIN SWITCH

(1) Operate the main switch and check for continuity across the individual terminals.

Switch state \ Terminal No.	2	Illumination	7	5	1	4
Press OFF	○	⊗	○			
Neutral position	○	⊗	○		○	○
Press ON	○	⊗	○	○	○	○

NOTE
○—○ denotes continuity across the terminals.

(2) Connect a positive lead from the battery to terminal (5) and a negative lead from the battery to terminal (4) and check that battery voltage is available across terminal (1) and the ground during the period the ON side of the main switch is pressed and during the period before the OFF side is pressed thereafter.
Check that when the OFF side of the main switch is pressed thereafter, the battery voltage available across terminal (1) and the ground is reduced to 0 V.

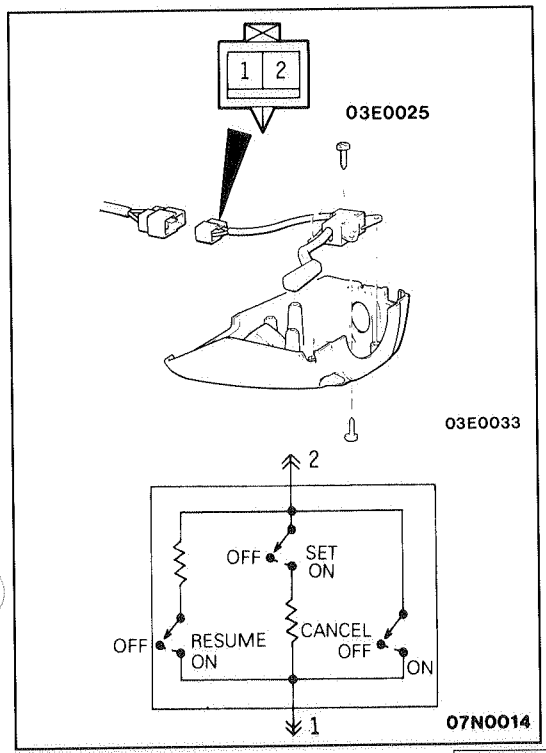

AUTO-CRUISE CONTROL SWITCH

(1) Remove the steering column lower cover.
(2) Disconnect the connector of the control switch and operate the control switch to measure the resistance between the individual terminals.
If the readings are as shown below, the control switch may be considered good.

Switch operation	Resistance between terminals
When switch is not operated	No continuity
When switch is turned to CANCEL position	Approx. 0 Ω
When switch is turned to RESUME position	Approx. 820 Ω
When switch is turned to SET position	Approx. 2,700 Ω

NOTES

COOLING

CONTENTS

M14AA--

COOLING FAN 7

RADIATOR 6

SERVICE ADJUSTMENT PROCEDURES 4
- Drive Belt Deflection Adjustment 5
- Drive Belt Deflection Check 5
- Engine Coolant Concentration Test 5
- Engine Coolant Leak Check 4
- Engine Coolant Replacement 5
- Radiator Cap Pressure Test 5

SPECIAL TOOL 3

SPECIFICATIONS 2
- General Specifications 2
- Lubricants 3
- Sealants and Adhesives 3
- Service Specifications 2

THERMOSTAT 8

THERMO SWITCH, ENGINE COOLANT TEMPERATURE GAUGE UNIT, ENGINE COOLANT TEMPERATURE SENSOR AND ENGINE COOLANT TEMPERATURE SWITCH 10

TROUBLESHOOTING 4
- No Rise in Temperature
- Overheat

WATER PUMP 9

SPECIFICATIONS

M14CA--

GENERAL SPECIFICATIONS

Items	Specifications
Cooling method	Water-cooled pressurized, forced circulation
Radiator	
Type	Pressurized corrugated fin type
Performance KJ/h (kcal/h, BTU/h)	
<A/T>	193,396 (46,200, 183,333)
<M/T>	182,093 (43,500, 172,619)
Automatic transmission oil cooler <Vehicles with A/T>	
Performance KJ/h (kcal/h, BTU/h)	28,465 (6,800, 26,984)
Thermostat	
Type	Wax type with jiggle valve
Identification mark	88 (Stamped on flange)
Fan clutch	
Type	Thermo type with spiral type bimetal
Water pump	
Type	Impeller of centrifugal type

SERVICE SPECIFICATIONS

M14CB--

Items		Specifications
Standard value		
Radiator cap		
High pressure valve opening pressure	kPa (psi)	75–105 (11–15)
Vacuum valve opening pressure	kPa (psi)	−5 or less (−.7 or less)
Range of coolant antifreeze concentration	%	30–60
Thermostat		
Valve opening temperature of thermostat	°C (°F)	88 (190)
Full-opening temperature of thermostat	°C (°F)	100 (212) or more
Engine coolant temperature gage unit		
Resistance		
At 70°C (158°F)	Ω	104 ± 13.5
Engine coolant temperature sensor		
Resistance		
At 20°C (68°F)	kΩ	2.37 ± 0.24
At 80°C (176°F)	Ω	290 ± 32
Thermo switch <A/T> (always opened type)		
OFF → ON operating temperature	°C (°F)	More than 50 (112)

TSB Revision

Items	Specifications
Limit Opening pressure of radiator cap high pressure valve kPa (psi)	65 (9.2)

LUBRICANTS

M14CD--

Items	Recommended antifreeze	Quantity
Engine coolant	DIA QUEEN LONG-LIFE COOLANT (Part No. 0103044) or HIGH QUALITY ETHYLENE GLYCOL ANTIFREEZE COOLANT	9.5 dm^3 (10.0 qts.)*

NOTE
* includes 0.65 dm^3 (.69 qts.) in reserve tank.

SEALANTS AND ADHESIVES

M14CE--

Items	Specified sealant and adhesive
Cylinder block drain plug Engine coolant temperature sensor	3M Nut Locking Part No. 4171 or equivalent
Engine coolant temperature gauge unit Thermo switch <A/T>	3M ATD Part No. 8660 or equivalent

SPECIAL TOOL

M14DA--

Tool	Number	Name	Use
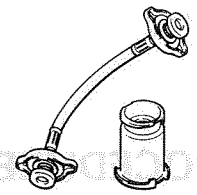	MIT210863	Radiator cap test adapter	Radiator cap test

TROUBLESHOOTING

M14EBAC

Symptom	Probable cause	Remedy
Overheat	Insufficient engine coolant	Refill
	Antifreeze concentration too great	Correct
	Loose or broken drive belt	Replace
	Inoperative fan clutch	Replace
	Damaged or blocked (insufficiently ventilated) radiator fins	Correct
	Water leaks Damaged radiator core joint Corroded or cracked hoses (radiator hose, heater hose, etc.) Loose bolt or faulty gasket in water outlet fitting (thermostat) Loose water pump mounting bolt or faulty gasket Faulty radiator cap valve or setting of spring	 Replace Replace Correct or replace Correct or replace Replace
	Faulty thermostat operation	Replace
	Faulty water pump operation	Replace
	Water passage clogged with slime or rust deposit or foreign substance	Clean
No rise in temperature	Faulty thermostat	Replace

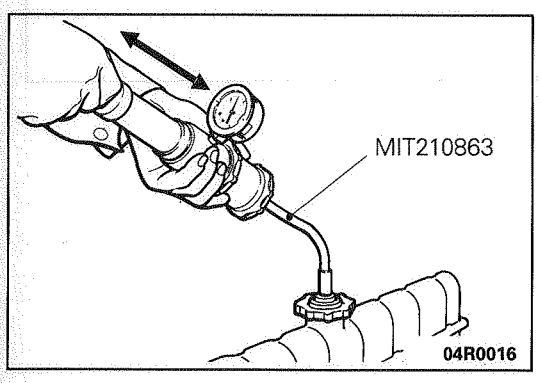

SERVICE ADJUSTMENT PROCEDURES

ENGINE COOLANT LEAK CHECK

M14FAAC

1. Loosen radiator cap.
2. Confirm that the coolant level is up to the filler neck.
3. Install a radiator cap tester to the radiator filler neck and apply 160 kPa (23 psi) pressure. Hold for two minutes in that condition, while checking for leakage from the radiator, hose or connections.

   Caution
   Be sure to completely clean away moisture from the places checked.
   When the tester is removed, be careful not to spill any coolant from it.
   Be careful, when installing and removing the tester and when testing, not to deform the filler neck of the radiator.
4. If there is leakage, repair or replace the appropriate part.

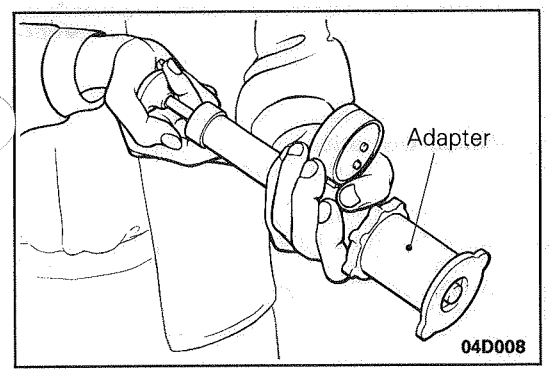

RADIATOR CAP PRESSURE TEST M14FBAB

1. Use an Adapter to attach the cap to the tester.
2. Increase the pressure until the indicator of the gage stops moving.

   Standard value: 75–105 kPa (11–15 psi)
   Limit: 65 kPa (9.2 psi)
3. Replace the radiator cap if the reading does not remain at or above the limit.

   NOTE
   Be sure that the cap is clean before testing, since rust or other foreign material on the cap seal will cause an improper indication.

ENGINE COOLANT REPLACEMENT M14FCAA

Refer to GROUP 00 – Maintenance Service.

ENGINE COOLANT CONCENTRATION TEST M14FDAA

Refer to GROUP 00 – Maintenance Service.

DRIVE BELT DEFLECTION CHECK M14FEAI

Refer to GROUP 11 – Service Adjustment Procedures.

DRIVE BELT DEFLECTION ADJUSTMENT M14FFAK

Refer to GROUP 11 – Service Adjustment Procedures.

RADIATOR

M14QA--

REMOVAL AND INSTALLATION

Pre-removal Operation
- Draining of the Engine Coolant
- Removal of the Under Cover <A/T>

Post-installation Operation
- Installation of the Under Cover <A/T>
- Supplying of the Engine Coolant
- Supplying of the Automatic Transmission Fluid <A/T> (Refer to GROUP 23 – Service Adjustment Procedures)

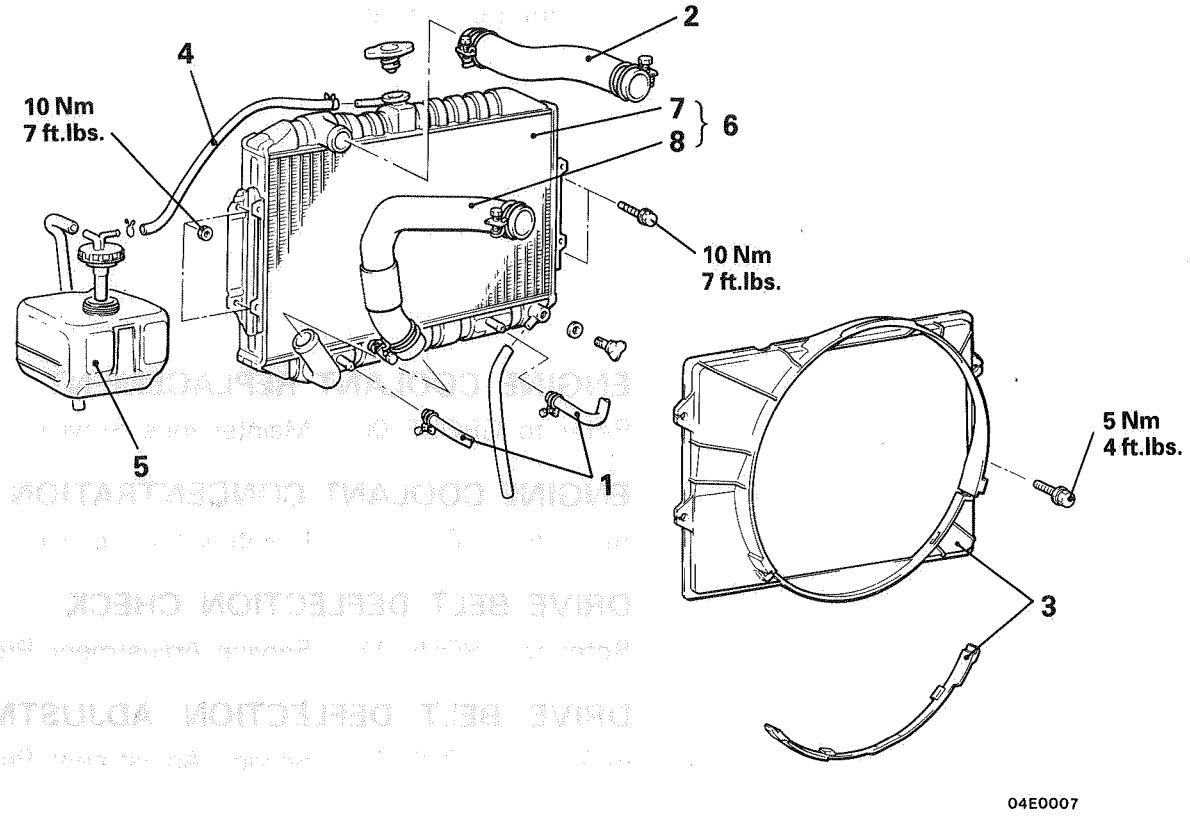

04E0007

Removal steps

1. Automatic transmission oil cooler hose connection <A/T>
2. Radiator upper hose
3. Radiator shroud
4. Overflow hose
5. Reserve tank
6. Radiator and radiator lower hose
7. Radiator
8. Radiator lower hose

INSPECTION

M14QCAL

- Check for foreign material between radiator fins.
- Check the radiator fins for bend or damage.
- Check the radiator for corrosion, damage, rust or scale.
- Check the radiator hoses for cracks, damage or deterioration.
- Check the reserve tank for damage.
- Check the spring of radiator cap for deterioration.
- Check the packing of radiator cap for damage or cracks.

TSB Revision

COOLING FAN

M14HA--

REMOVAL AND INSTALLATION

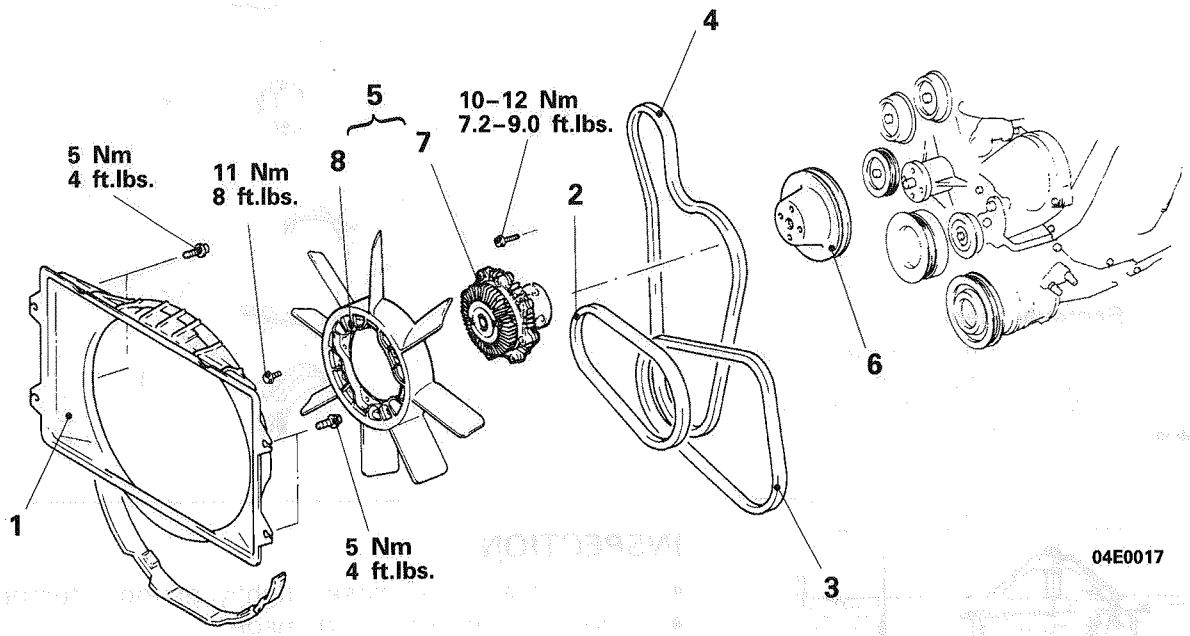

Removal steps

1. Shroud
2. Drive belt (Power steering)
3. Drive belt (Air conditioner)
4. Drive belt (Alternator)
5. Cooling fan and fan clutch assembly
6. Pulley
7. Fan clutch
8. Cooling fan

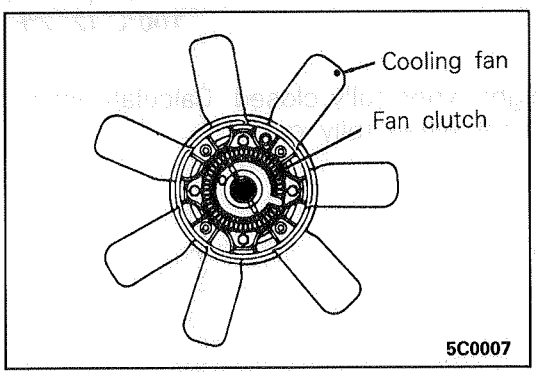

INSPECTION

M14HCAH

COOLING FAN

- Check blades for damage and cracks.
- Check for cracks and damage around bolt holes in fan hub.
- If any portion of fan is damaged or cracked, replace cooling fan.

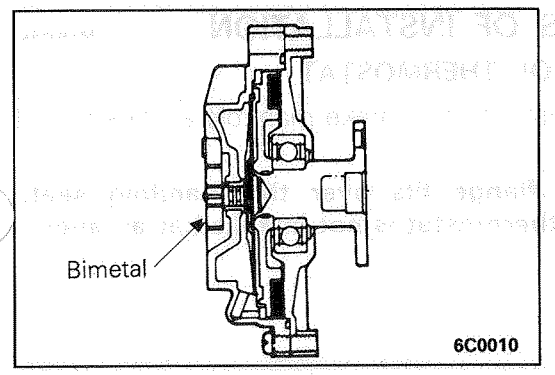

FAN CLUTCH

- Check to ensure that fluid in fan clutch is not leaking at case joint and seals. If fluid quantity decreases due to leakage, fan speed will decrease and engine overheating might result.
- When a fan attached to an engine is turned by hand, it should give a sense of some resistance. If fan turns lightly, it is faulty.
- Check bimetal strip for damage.

THERMOSTAT

REMOVAL AND INSTALLATION

Pre-removal and Post-installation Operation
- Draining and Supplying of Engine Coolant

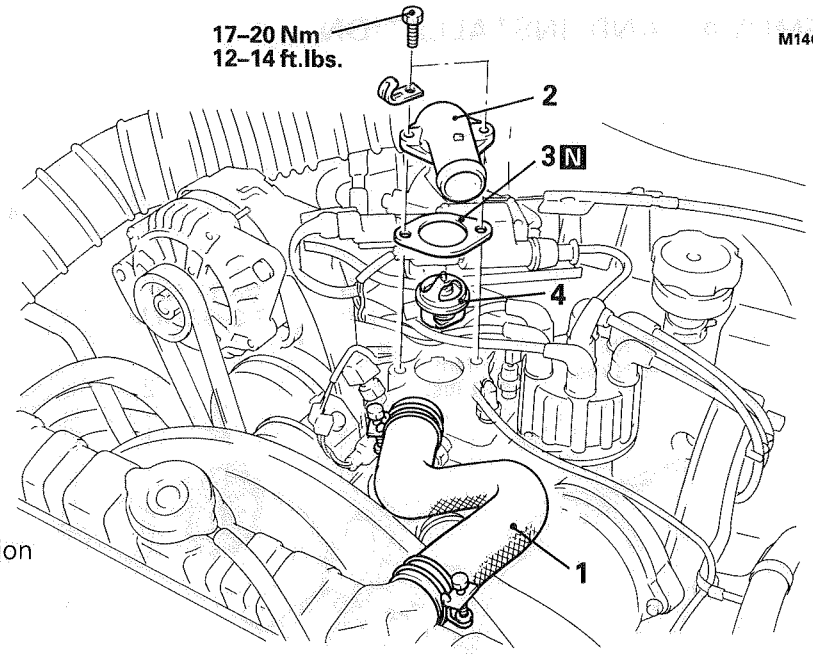

Removal steps
1. Radiator upper hose connection
2. Water outlet fitting
3. Water outlet fitting gasket
4. Thermostat

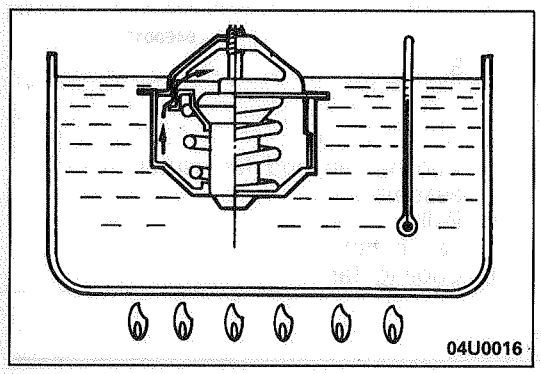

INSPECTION

M14GDAN

- Check that valve closes tightly at room temperature.
- Check for defects or damage.
- Check for rust or encrustation on valve. Remove if any.
- Immerse thrmostat in container of water. Stir to raise water temperature and check that thermostat valve opening temperature and the temperature with valve fully open [valve lift–over 8 mm (.31 in.)] are at the standard value.

Standard value: Valve opening temperature

	88C° (190°F)
Fully open	**100°C (212°F)**

NOTE
Measure valve height when fully closed. Calculate lift by measuring the height when fully open.

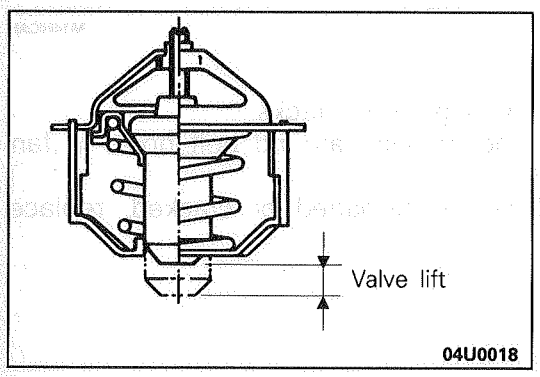

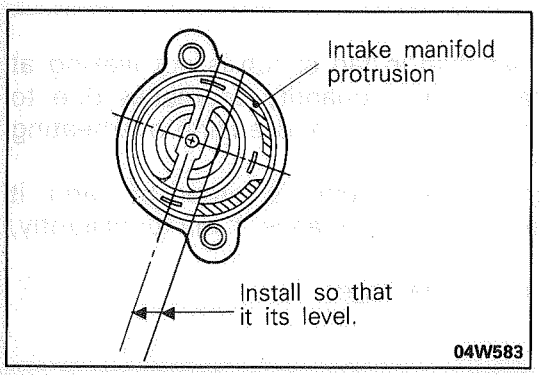

SERVICE POINTS OF INSTALLATION

M14GEAK

4. INSTALLATION OF THERMOSTAT

Install the thermostat to the intake manifold as illustrated.

Caution
The thermostat flange fits over the manifold seat; ensure that the thermostat is not installed at an angle.

TSB Revision

WATER PUMP

REMOVAL AND INSTALLATION

M14MB--

Pre-removal and Post-installation Operation
- Draining and Supplying of the Engine Coolant
- Removal and Installation of Timing Belt
(Refer to GROUP 11 – Timing Belt)

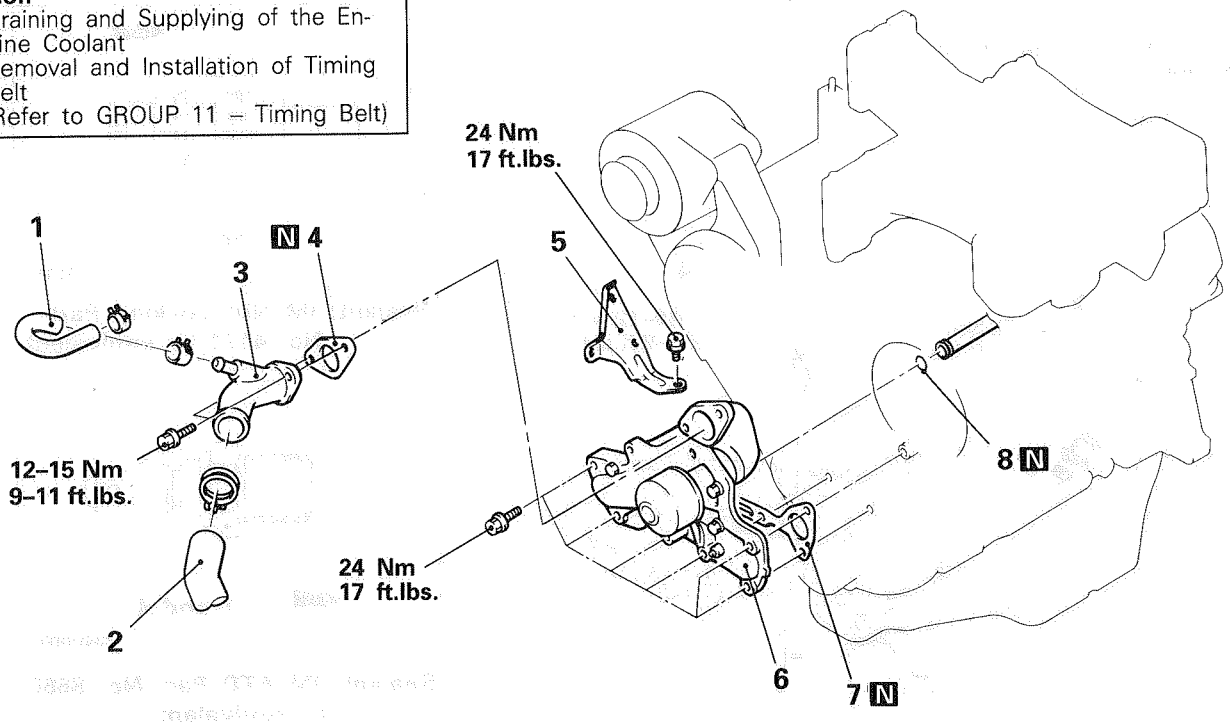

04E0039

Removal steps
1. Water bypass hose
2. Radiator lower hose
3. Water inlet fitting
4. Water inlet fitting gasket
5. Tensioner bracket stay
◆◆ 6. Water pump
7. Water pump gasket
8. O-ring

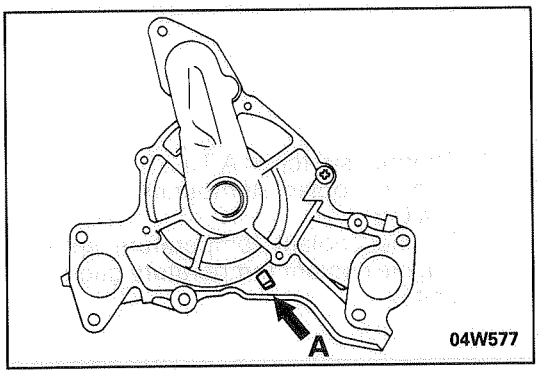

04W577

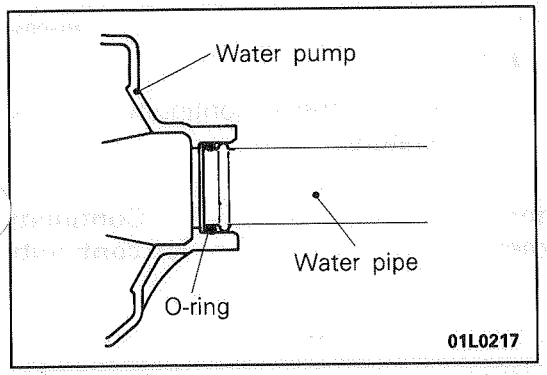

01L0217

INSPECTION

M14MDAP

WATER PUMP

- Check each part for cracks, damage or wear, and replace the water pump assembly if necessary.
- Check the bearing for damage, abnormal noise and slugish rotation, and replace the water pump assembly if necessary.
- Check the seal unit for leaks, and replace the water pump assembly if necessary.
- Check for water leakage if water leaks from hole "A" seal unit is faulty. Replace as an assembly.

SERVICE POINTS OF INSTALLATION

M14MEAZ

6. INSTALLATION OF WATER PUMP

Rinse the mounting location of the O-ring and water pipe with water, and install the O-ring and water pipe.

Caution
1. **Do not apply oil and grease to water pipe O-ring.**
2. **Keep the water pipe connections free of sand, dust, etc.**
3. **Insert water pipe until its end bottoms.**

THERMO SWITCH, ENGINE COOLANT TEMPERATURE GAUGE UNIT, ENGINE COOLANT TEMPERA TURE SENSOR AND ENGINE COOLANT TEMPERATURE SWITCH

M14OE

REMOVAL AND INSTALLATION

Pre-removal and Post-installation Operation
- Draining and Supplying of the Engine Coolant

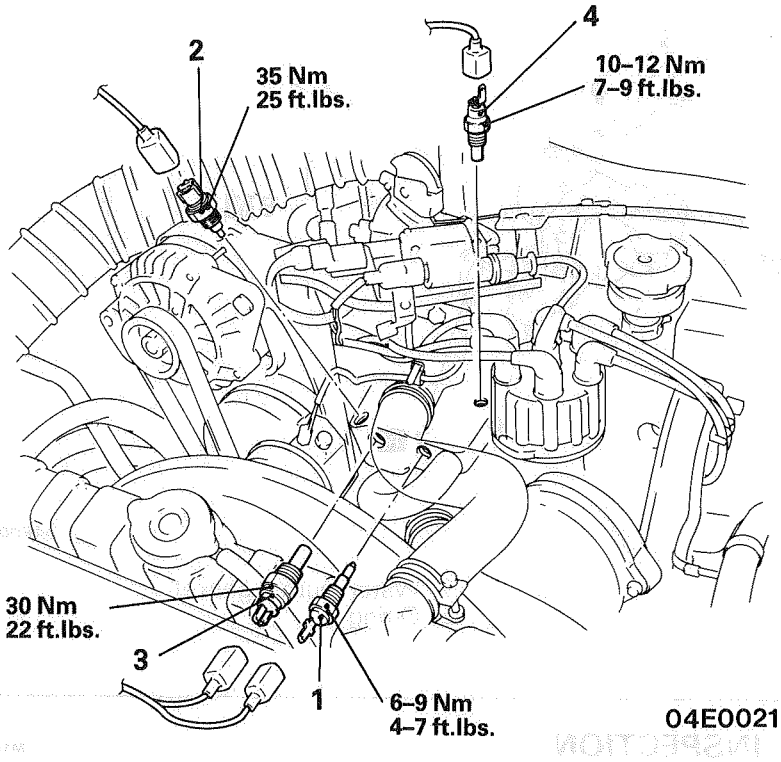

04E0021

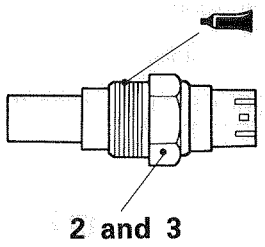

20A0198

Sealant: 3M Nut Locking Part No. 4171 or equivalent

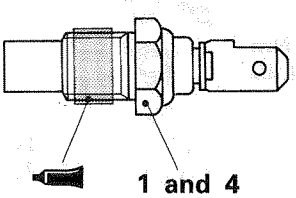

04D0006

Sealant: 3M ATD Part No. 8660 or equivalent

1. Thermo switch <A/T>
2. Engine coolant temperature switch <A/C>
3. Engine coolant temperature sensor
4. Engine coolant temperature gage unit

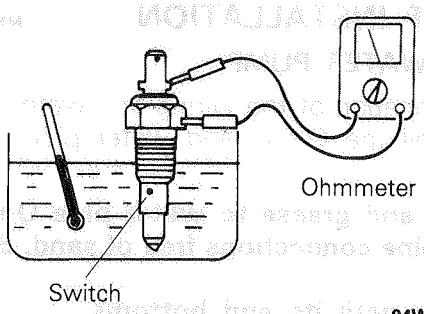

04W590

INSPECTION

M14ODAO

THERMO SWITCH <A/T>

Raise the water temperature and check continuity when it reaches the specified temperature.

Standard value:

50°C (122°F) or more	**Continuity**
50°C (122°F) dimmer	**No continuity**

TSB Revision

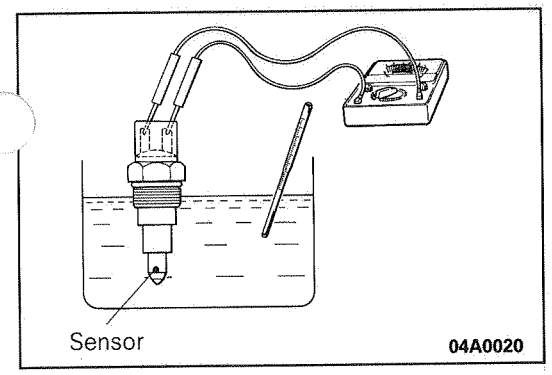

ENGINE COOLANT TEMPERATURE SENSOR

Raise the water temperature and measure the resistance if within the standard value.

Standard value: **2.37±0.24 kΩ [at 20°C (68°F)]**
290±32 Ω [at 80°C (176°F)]

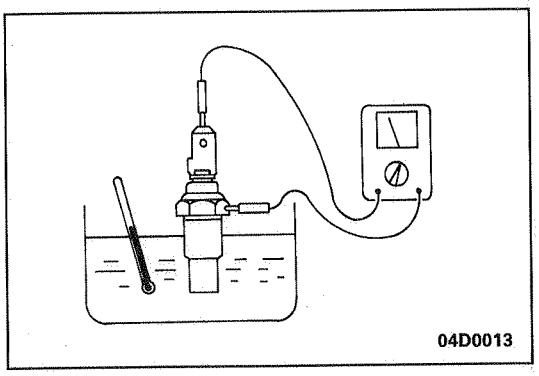

ENGINE COOLANT TEMPERATURE GAUGE UNIT

Immerse the gage unit in hot water at 70°C (158°F) and measure the resistance value with an ohmmeter.

Standard value : **104±13.5 Ω [at 70°C (158°F)]**

ENGINE COOLANT TEMPERATURE SWITCH <A/C>

Refer to GROUP 55 – Engine Coolant Temperature Switch.

NOTES

INTAKE AND EXHAUST

CONTENTS

M15AA--

EXHAUST MANIFOLD 3

EXHAUST PIPE, MUFFLER AND CATALYTIC CONVERTER 4

SERVICE ADJUSTMENT PROCEDURES 2
- Intake Manifold Vacuum Inspection 2

SPECIFICATIONS 2
- General Specifications 2
- Service Specifications 2

TROUBLESHOOTING 2
- Abnormal Noise 2
- Exhaust Gas Leakage 2

SPECIFICATIONS

GENERAL SPECIFICATIONS

M15CA--

Items	Specifications
Air filter	
Type	Dry type
Element	Unwoven cloth type
Exhaust system	
Front exhaust pipe	Dual type
Muffler	Expansion resonance type
Coupling	Spherical coupling and Flat coupling
Suspension system	Rubber hangers and Rubber suspenders

SERVICE SPECIFICATIONS

M15CB--

Items	Standard	Limit
Intake and exhaust manifolds		
Distortion of cylinder head contacting surface mm (in.)	Less than 0.15 (.0059)	0.3 (.012)

TROUBLESHOOTING

M15EAAAa

Symptom	Probable cause	Remedy
Exhaust gas leakage	Loose joints	Retighten
	Broken pipe or muffler	Repair or replace
Abnormal noise	Broken separator in muffler	Replace
	Broken rubber hangers or suspender	
	Interference of pipe or muffler with vehicle body	Correct
	Broken pipe or muffler	Repair or replace

SERVICE ADJUSTMENT PROCEDURES

INTAKE MANIFOLD VACUUM INSPECTION

M15GCAC

Refer to GROUP 11 - Service Adjustment Procedures.

EXHAUST MANIFOLD

REMOVAL AND INSTALLATION

M15NA--

Pre-removal and Post-installation Operation
- Removal and Installation of the Under Cover

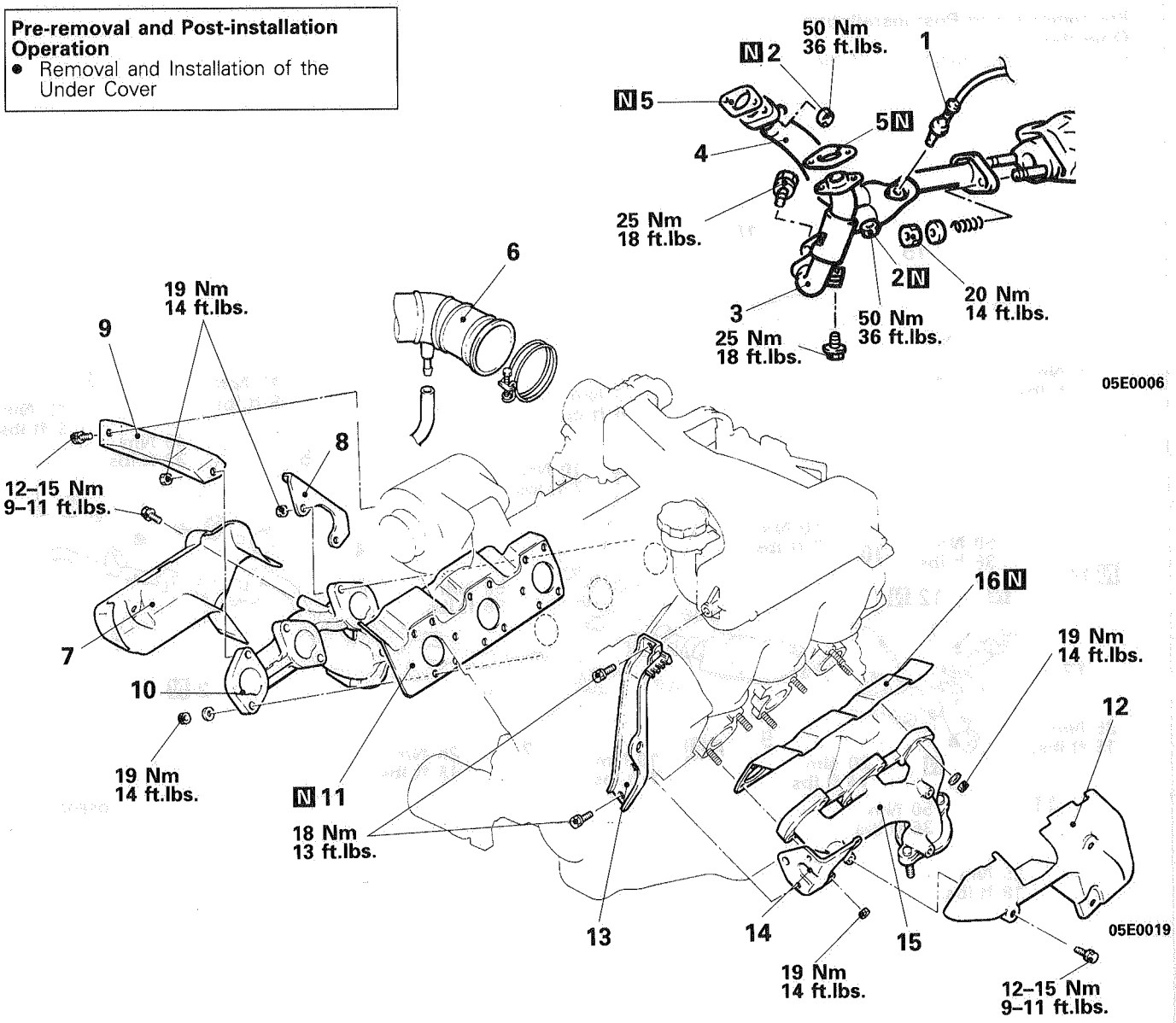

Removal steps of exhaust manifold (Right)
1. Oxygen sensor
2. Self-locking nut
3. Front exhaust pipe (L.H.)
4. Front exhaust pipe (R.H.)
5. Gasket
6. Air duct
7. Heat protector
8. Engine hanger
9. Alternator stay
10. Exhaust manifold
11. Exhaust manifold gasket

Removal steps of exhaust manifold (Left)
3. Front exhaust pipe (L.H.)
5. Gasket
12. Heat protector
13. Air intake plenum stay (front)
14. Bracket
15. Exhaust manifold
16. Exhaust manifold gasket

INSPECTION

M15NCAV

EXHAUST MANIFOLD

- Damage or cracking of any part.

TSB Revision

EXHAUST PIPE, MUFFLER AND CATALYTIC CONVERTER

REMOVAL AND INSTALLATION

M15RA--

Pre-removal and Post-installation Operation
- Removal and installation of the under cover

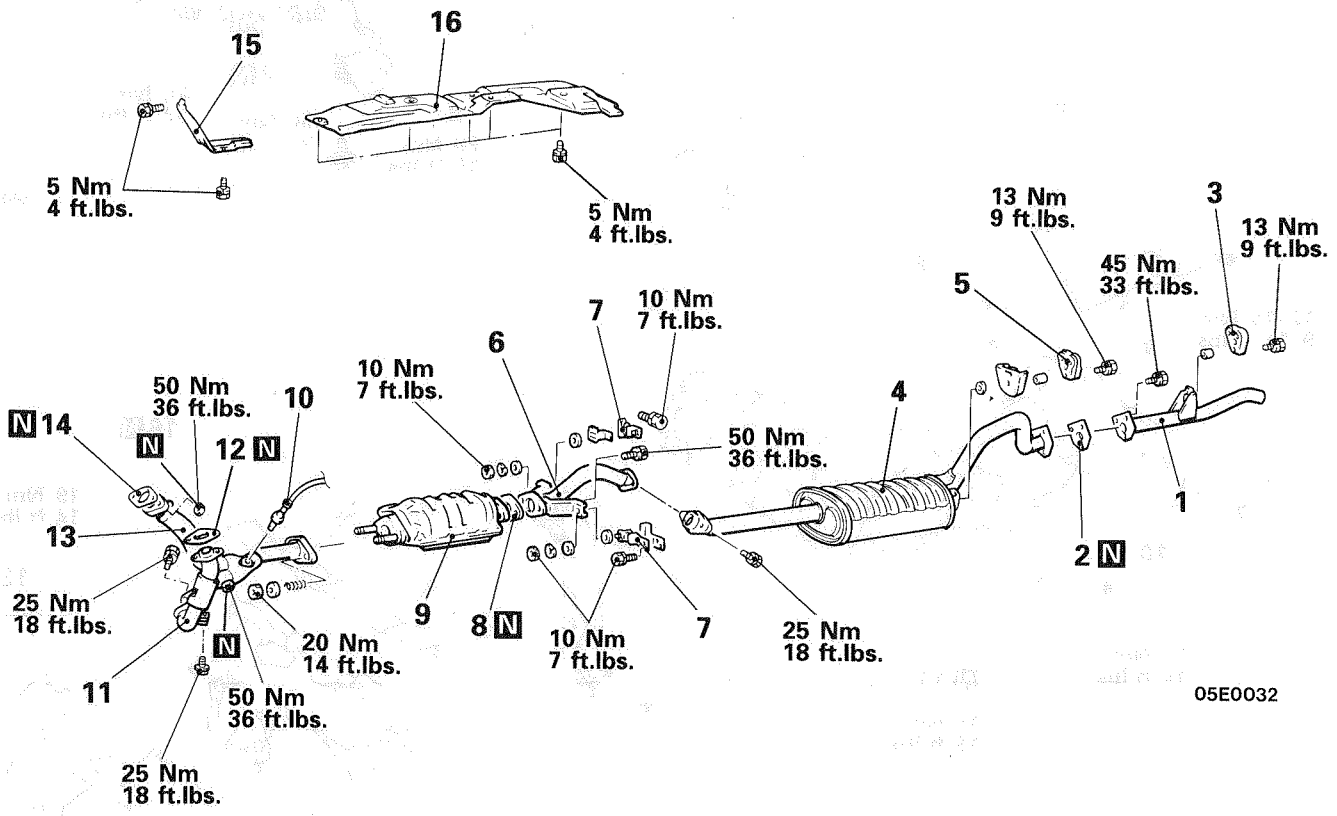

Removal steps

1. Tail pipe
2. Gasket
3. Hanger
4. Main muffler
5. Hanger
6. Center exhaust pipe
7. Suspender
8. Gasket
9. Catalytic converter
10. Oxygen sensor
11. Front exhaust pipe (L.H.)
12. Gasket
13. Front exhaust pipe (R.H.)
14. Gasket
15. Heat protector
16. Front panel heat protector

INSPECTION

M15RCAO

- Check the mufflers and pipes for corrosion or damage.
- Check the rubber hangers and rubber suspenders for deterioration or damage.
- Check for gas leakage from mufflers and pipes.

TSB Revision

EMISSION CONTROL

CONTENTS

M17AA--

EMISSION CONTROL 2

CRANKCASE EMISSION CONTROL SYSTEM 4

EVAPORATIVE EMISSION CONTROL SYSTEM 5

EXHAUST EMISSION CONTROL SYSTEM 8

SPECIFICATIONS 2
- General Specifications 2
- Service Specifications 2

TROUBLESHOOTING 3
- Engine will not Start or is Hard to Start
- Excessive Oil Consumption
- Rough Idle or Engine Stalls

VACUUM HOSES 3

EMISSION CONTROL

SPECIFICATIONS

GENERAL SPECIFICATIONS

M17CA--

Crankcase emission control system	Closed type with positive crankcase ventilation valve
Evaporative emission control system Canister Purge control solenoid valve	Canister storage type Charcoal type ON/OFF solenoid valve
Exhaust emission control system Catalytic converter Location	 Monolith type Under floor

SERVICE SPECIFICATIONS

M17CB--

Items		Specifications
Purge control solenoid valve coil resistance	Ω	36–44 [at 20°C (68°F)]

TROUBLESHOOTING

M17EAAC

Symptom	Probable cause	Remedy
Engine will not start or is hard to start	Vacuum hose disconnected or damaged	Repair or replace
	Malfunction of the purge control solenoid valve	Repair or replace
Rough idle or engine stalls	Vacuum hose disconnected or damaged	Repair or replace
	Malfunction of the positive crankcase ventilation	Replace
	Malfunction of the purge control system	Check the system; if there is a problem, check its component parts.
Excessive oil consumption	Positive crankcase ventilation line clogged	Check positive crankcase ventilation system

VACUUM HOSES

M17JA-B

VACUUM HOSES ROUTING

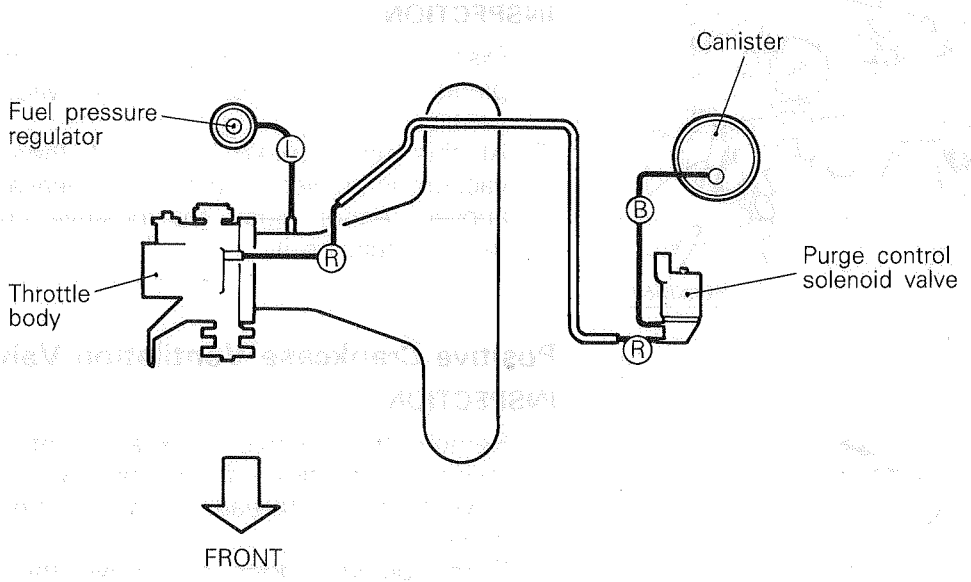

L: Light Blue
R: Red
B: Black

7EM0088

INSPECTION

M17JCAE2

(1) Referring to the VACUUM HOSES ROUTING, confirm that the vacuum hoses are properly connected.
(2) Check the hoses for irregularities (disconnection, looseness, etc.) and confirm that there is no breakage or damage.

INSTALLATION

M17JDAE2

(1) When connecting a hose, firmly press it onto the nipple.
(2) Referring to the VACUUM HOSES ROUTING, connect the hoses correctly.

CRANKCASE EMISSION CONTROL SYSTEM

M17IA--

COMPONENTS LOCATION

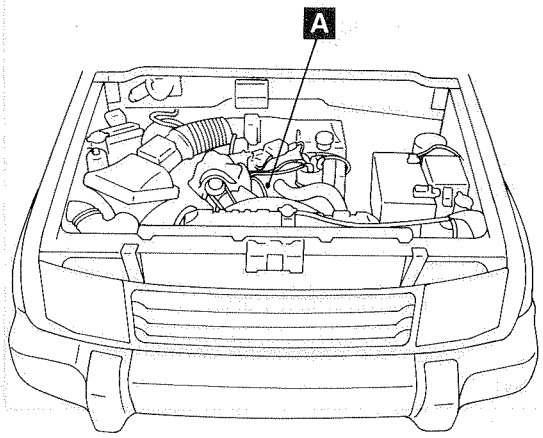

16E0128

Name	Symbol
Positive crankcase ventilation valve	A

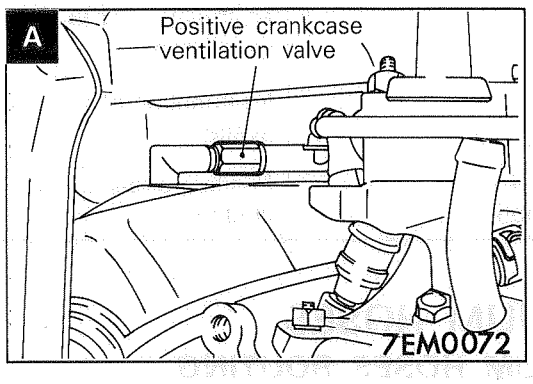

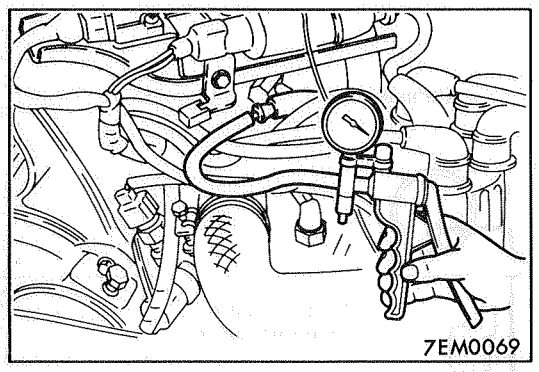

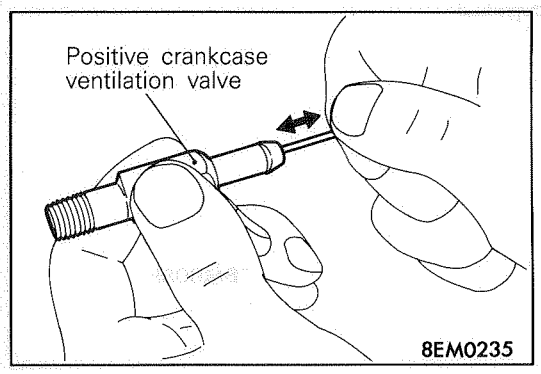

CRANKCASE VENTILATION SYSTEM

M17IABB

INSPECTION

(1) Disconnect the ventilation hose from the air-intake plenum, and connect a hand vacuum pump to the ventilation hose.
(2) At this time, make sure that there is leakage when vacuum is applied. If there is no leakage when vacuum is applied, either clean the positive crankcase ventilation valve or replace it.

Positive Crankcase Ventilation Valve

M17IAAK

INSPECTION

(1) Remove the positive crankcase ventilation valve.
(2) Insert a thin stick into the positive crankcase ventilation valve from the threaded side to check that the plunger moves.
(3) If the plunger does not move the positive crankcase ventilation valve is clogged. Clean it or replace.

REMOVAL

(1) Remove the air intake plenum. (Refer to GROUP 15.)
(2) Remove the positive crankcase ventilation valve.

INSTALLATION

(1) Install the positive crankcase ventilation valve and tighten to specified torque.

Specified tightening torque: 10 Nm (7.2 ft.lbs.)

(2) Install the air intake plenum. (Refer to GROUP 15.)

EVAPORATIVE EMISSION CONTROL SYSTEM

M17IB--

COMPONENTS LOCATION

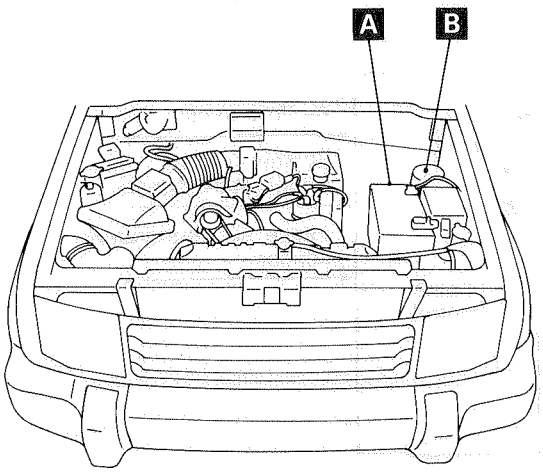

16E0128

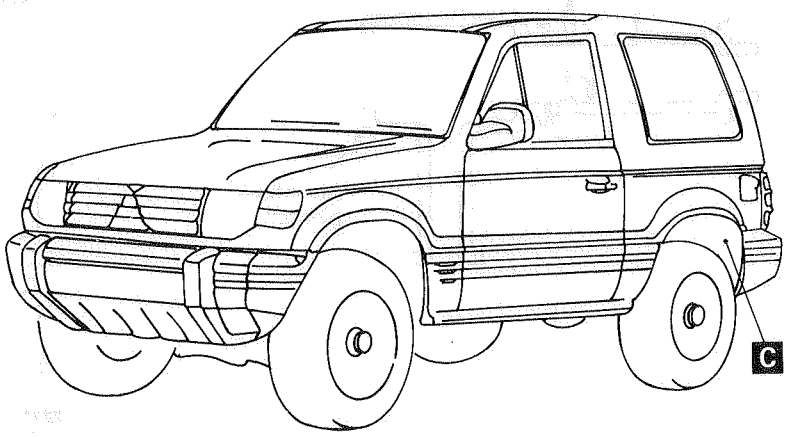

7EM0196

Name	Symbol	Name	Symbol
Canister	B	Two-way valve	C
Purge control solenoid valve	A		

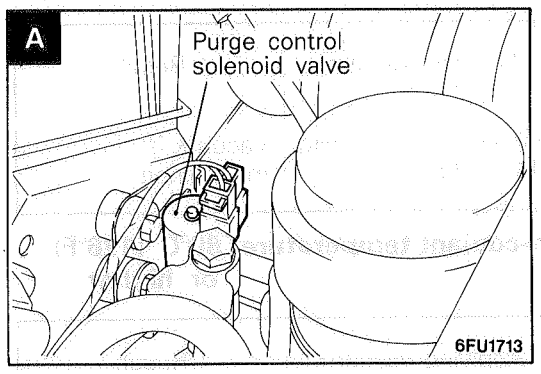

6FU1713

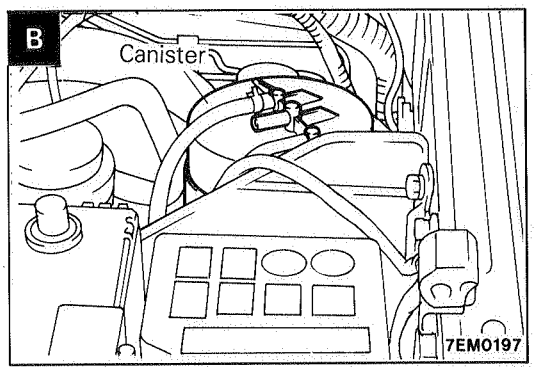

7EM0197

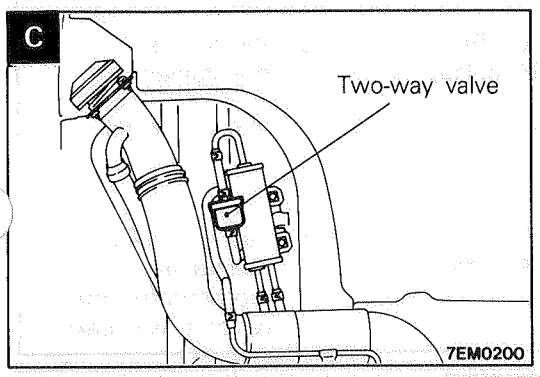

7EM0200

TSB Revision

PURGE CONTROL SYSTEM

M17IBBR

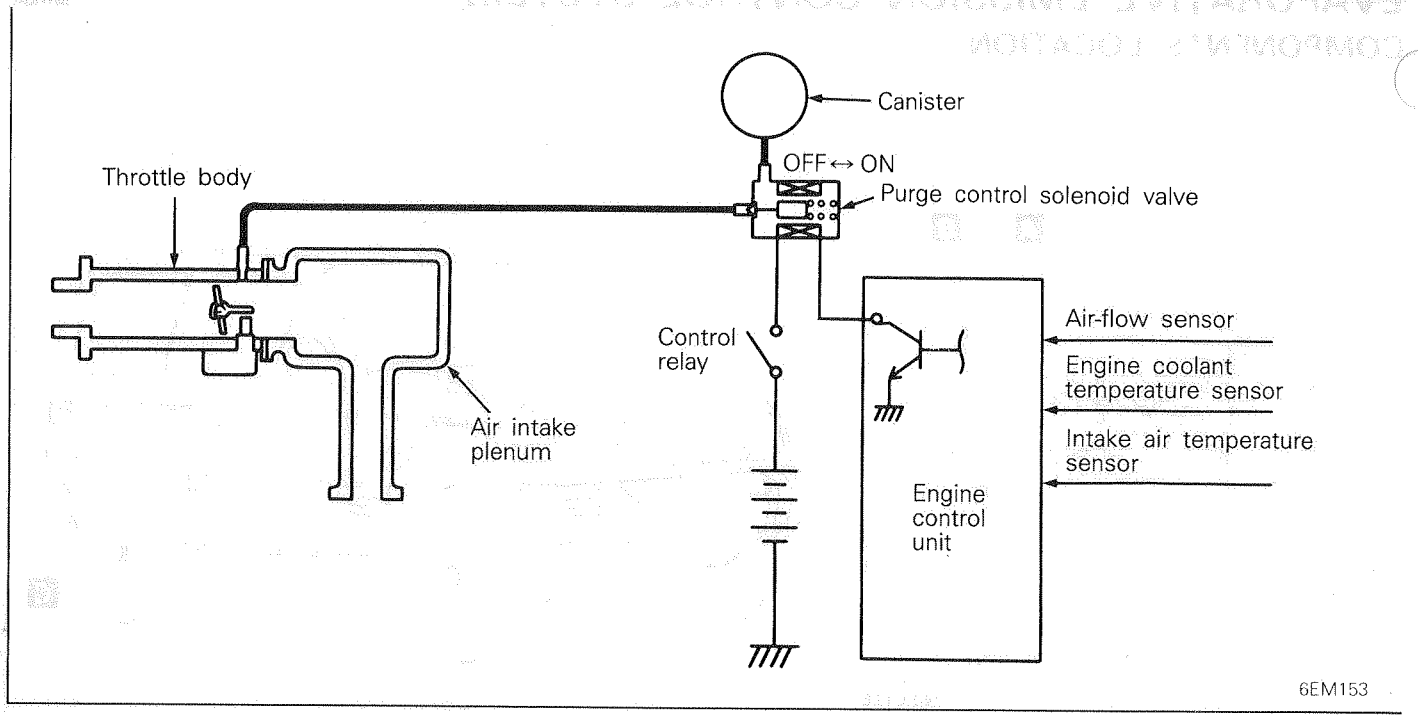

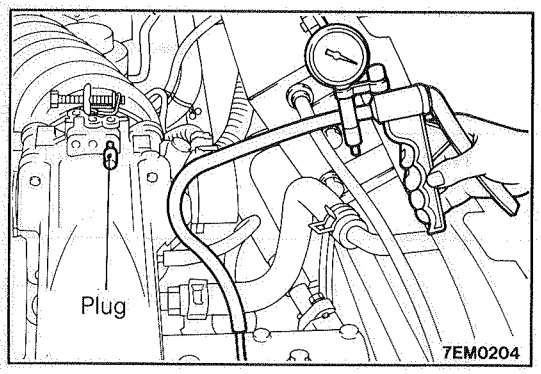

INSPECTION

(1) Disconnect the vacuum hose (red stripe) from the throttle body, and connect a hand vacuum pump to the vacuum hose.
(2) Plug the nipple from which the vacuum hose was disconnected.
(3) Under the engine conditions described below, provide a vacuum by using the hand vacuum pump, and then check.

When engine is cold-coolant temperature: 40°C (104°F) or less

Engine operating condition	Applying vacuum	Result
Idling	50 kPa (375 mmHg, 14 in.Hg)	Vacuum is maintained
3,000 rpm		

When engine is warm-coolant temperature: 80°C (176°F) or higher

Engine operating condition	Applying vacuum	Result
Idling	50 kPa (375 mmHg, 14 in.Hg)	Vacuum is maintained
Within 3 minutes after engine start 3,000 rpm	Try applying vacuum	Vacuum leaks
After 3 minutes have passed after engine start 3,000 rpm	50 kPa (375 mmHg, 14 in.Hg)	Vacuum will be maintained momentarily after which it will leaks.

TSB Revision

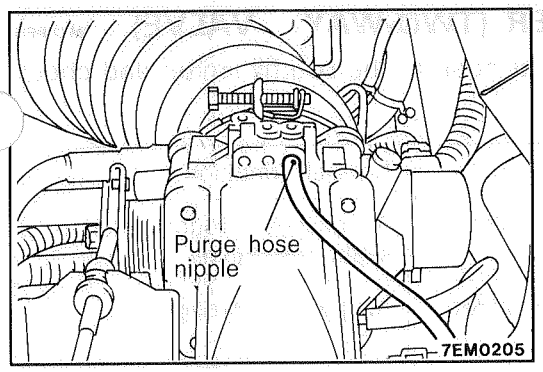

Purge Port Vacuum M17IBKA

INSPECTION

Engine coolant temperature: 80–95°C (176–203°F)

(1) Disconnect the vacuum hose from the throttle body purge hose nipple and connect a hand vacuum pump to the nipple.

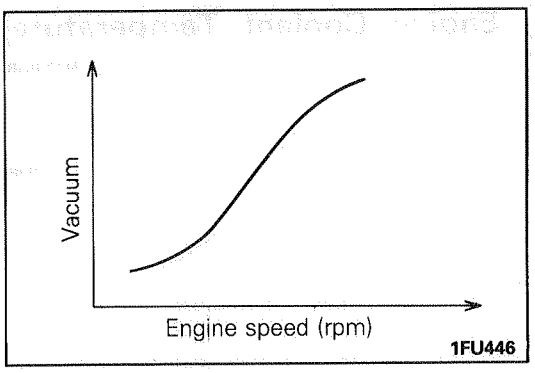

(2) Start the engine and check to see that, after raising the engine speed by racing the engine, vacuum raises proportionately with the rise in engine speed.

NOTE
If there is a problem with the change in vacuum, it is possible that the throttle body port may be clogged and require cleaning.

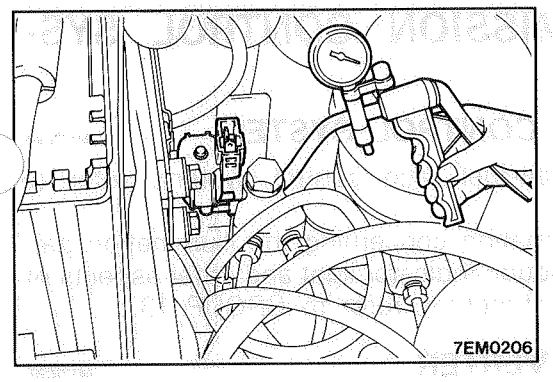

Purge Control Solenoid Valve M17IBFC

INSPECTION

NOTE
When disconnecting the vacuum hose, make an identification mark on it so that it can be reconnected to the original position.

(1) Disconnect the vacuum hose (black with red stripe) from the solenoid valve.
(2) Disconnect the harness connector.
(3) Connect a hand vacuum pump to the nipple to which the red-striped vacuum hose was connected.
(4) Apply a vacuum and check for air-tightness when voltage applied directly to the purge-control solenoid valve when the voltage is discontinued.

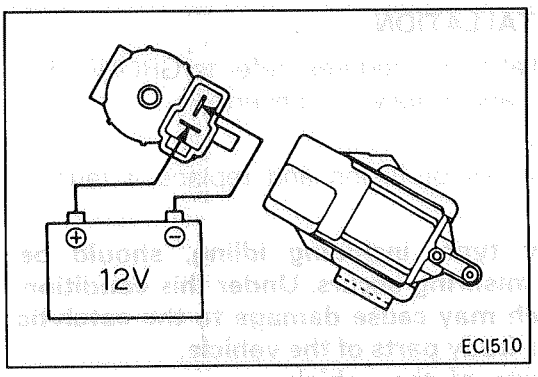

Battery voltage	Normal condition
When applied	Negative pressure leaks.
When discontinued	Negative pressure is maintained.

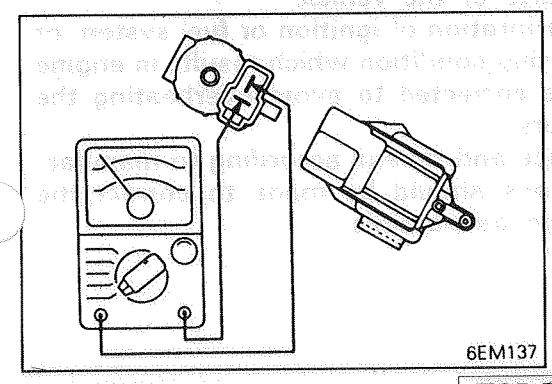

(5) Measure the resistance between the terminals of the solenoid valve.

Standard value : 36–44 Ω [at 20°C (68°F)]

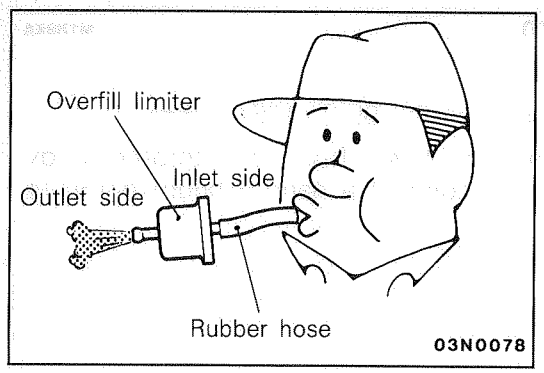

OVERFILL LIMITER (TWO-WAY VALVE) M17IBEG

Connect a clean rubber hose to the overfill limiter and check for operation.

Inspection procedure	Normal condition
Lightly blow from the inlet (fuel tank) side	Air passes through after a slight resistance
Lightly blow from the outlet (canister) side	Air passes through

Air Flow Sensor, Engine Coolant Temperature Sensor M17IBGB

Refer to GROUP 13.

Canister M17IBIB

Refer to GROUP 13.

EXHAUST EMISSION CONTROL SYSTEM

AIR-FUEL RATIO CONTROL SYSTEM M17ICAF

- To inspect the air-fuel ratio control system, refer to GROUP 13.
- For detailed information concerning the illumination pattern of the malfunction-indicator light and other aspects of the self-diagnosis function, refer to GROUP 13.

CATALYTIC CONVERTER M17ICBK

REMOVAL AND INSTALLATION

For removal and installation procedures, refer to GROUP 15 – Exhaust Pipe, Muffler and Catalytic Converter.

INSPECTION

Check for damage, cracks or fusion and replace if faulty.

Caution

1. **Operation of any type, including idling, should be avoided if engine misfiring occurs. Under this condition temperature, which may cause damage to the catalytic converter or under-body parts of the vehicle.**
   or under-body parts of the vehicle.
2. **Alteration or deterioration of ignition or fuel system or any type of operating condition which results in engine misfiring must be corrected to avoid overheating the catalytic converters.**
3. **Proper maintenance and tuneup according to manufacturer's specifications should be made to correct the conditions as soon as possible.**

CLUTCH

CONTENTS

M21AA--

CLUTCH CONTROL **6**

CLUTCH MASTER CYLINDER **8**

CLUTCH PEDAL **5**

SERVICE ADJUSTMENT PROCEDURES **3**

- Bleeding 4
- Clutch Pedal Inspection and Adjustment .. 3
- Inter-lock Switch Inspection and Adjustment 4

SPECIFICATIONS **2**

- General Specifications 2
- Lubricants 2
- Service Specifications 2

SPECIFICATIONS

GENERAL SPECIFICATIONS

M21CA--

Items		Specifications
Clutch operating method		Hydraulic type
Inside diameter of clutch master cylinder	mm (in.)	15.87 (5/8)
Clutch disc		
Facing size (outside × inside)	mm (in.)	240 × 160 (9.4 × 6.3)
Clutch cover assembly		
Type		Diaphragm spring strap drive type
Setting load	N (lbs.)	5500 (1213)
Mounting bolt circle diameter	mm (in.)	276 (10.9)
Clutch release cylinder		
Cylinder bore diameter	mm (in.)	19.05 (3/4)

SERVICE SPECIFICATIONS

M21CB--

Items		Specifications
Standard value		
Clutch pedal height	mm (in.)	185.5–190.5 (7.30–7.50)
Clutch pedal clevis pin play	mm (in.)	1–3 (.04–.12)
Clutch pedal free play	mm (in.)	6–13 (.24–.51)
Distance between the clutch pedal and the toeboard when the clutch is disengaged	mm (in.)	35 (1.4) or more
Clutch pedal full stroke	mm (in.)	145 (5.72)
Clearance between the stopper and inter-lock switch when clutch pedal is fully depressed	mm (in.)	4.5–5.5 (.177–.217)

LUBRICANTS

M21CD--

Items	Specified lubricants	Quantity
Clutch fluid	Brake fluid DOT 3 or DOT 4	As required
Inner surface of clutch master cylinder and outer circumference of piston assembly		

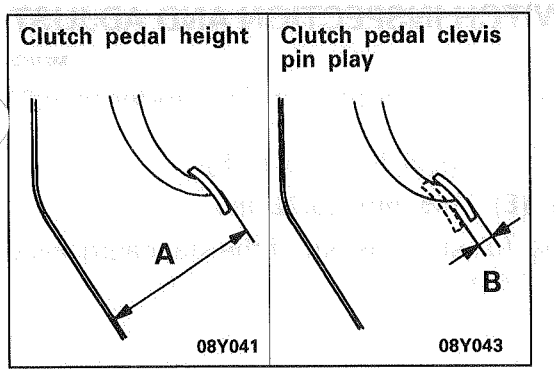

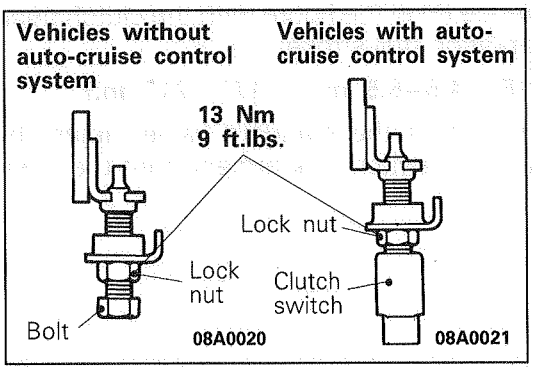

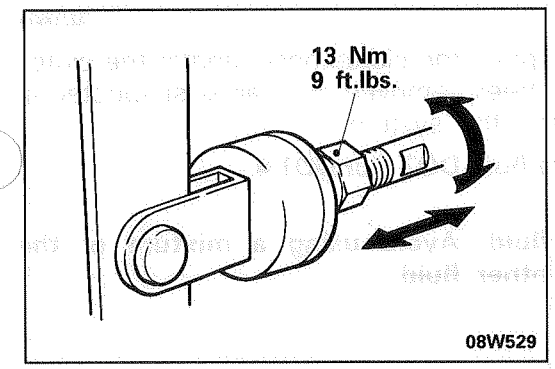

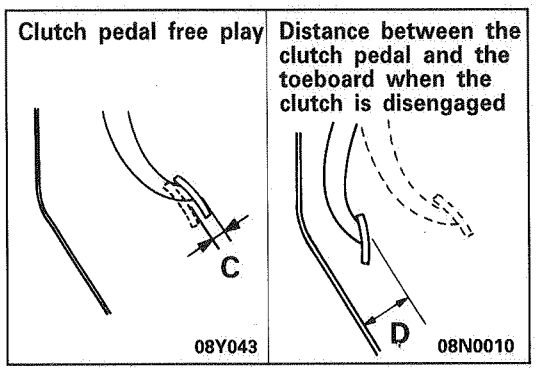

SERVICE ADJUSTMENT PROCEDURES

CLUTCH PEDAL INSPECTION AND ADJUSTMENT

M21FAAR

1. Measure the clutch pedal height (A) from the toeboard and the clutch pedal clevis pin play (B) at the face of the pedal pad.

   Standard value (A): 185.5–190.5 mm (7.30–7.50 in.)
   Standard value (B): 1–3 mm (.04–.12 in.)

2. If either the clutch pedal height or the clutch pedal clevis pin play are not within the standard value range, adjust as follows:
   (1) For vehicles without auto-cruise control system, turn and adjust the bolt so that the pedal height is the standard value, and then secure by tightening the lock nut. For vehicles with auto-cruise control system, disconnect the clutch switch connector and turn the switch for standard clutch pedal height. Then lock with the lock nut.

   NOTE
   When the pedal height is lower than the standard value, loosen the bolt, and then turn the push rod to make the adjustment. After the adjustment, tighten the bolt until it reaches the pedal stopper, and then lock with the lock nut.

   (2) Turn the push rod to adjust the clutch pedal clevis pin play to agree with the standard value and then secure the push rod with the lock nut.

   Caution
   When adjusting the clutch pedal clevis pin play, be careful not to push the push rod toward the master cylinder.

   (3) After completing the adjustments, confirm that the clutch pedal free play (measured at the face of the pedal pad) and the distance between the clutch pedal (the face of the pedal pad) and the toeboard when the clutch is disengaged are within the standard value ranges.

   Standard value (C): 6–13 mm (.24–.51 in.)
   Standard value (D): 35 mm (1.4 in.) or more

4. If the clutch pedal free play (C) and the distance (D) between the clutch pedal and the toeboard when the clutch is disengaged do not agree with the standard values, it is probably the result of either air in the hydraulic system or a faulty master cylinder or clutch. Bleed the air, or disassemble and inspect the master cylinder or clutch.

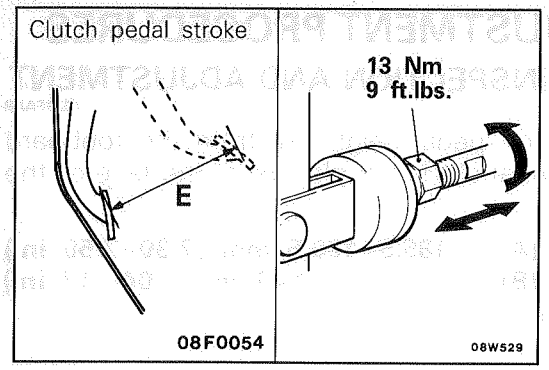

INTER-LOCK SWITCH INSPECTION AND ADJUSTMENT

M21FCAA

(1) Check and adjust the clutch pedal height (Refer to P.21-3.)

(2) Measure the clutch pedal full stroke (E).

Standard value (E): 145 mm (5.72 in.)

If the clutch pedal full stroke is out of the standanrd value, adjust by turning the push rod.

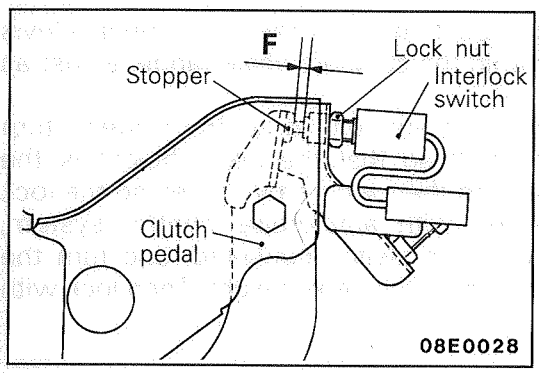

(3) Measure the clearance (F) in the figure with the clutch pedal fully depressed condition (full stroke).

Standard value (F): 4.5–5.5 mm (.177–.217 in.)

If the clearance is out of the standard value, adjust by loosening the inter-lock switch lock nut and turn the inter-lock switch.

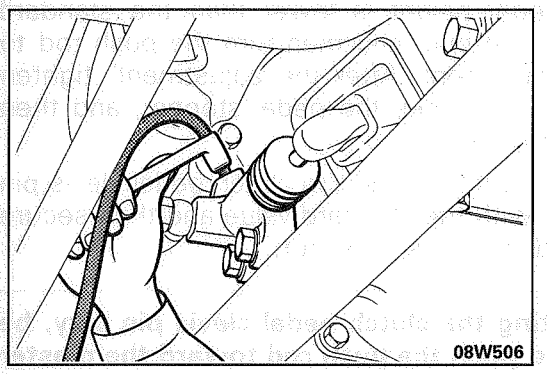

BLEEDING

M21FEAH

Whenever the clutch pipe, the clutch hose, and/or the clutch master cylinder have been removed, or if air is suspected in the clutch lines, bleed the system.

Specified fluid: Brake fluid DOT 3 or DOT 4

Caution
Use the specified fluid. Avoid using a mixture of the specified fluid and other fluid.

CLUTCH PEDAL

M21PA--

REMOVAL AND INSTALLATION

Pre-removal Operation
- Removal of the Foot Shower Duct (L.H.) and the Lap Cooler Duct A (Refer to GROUP 55 – Ventilators.)

Post-installation Operation
- Installation of the Foot Shower Duct (L.H.) and Lap Cooler Duct A (Refer to GROUP 55 – Ventilators).
- Adjustment of Clutch Pedal (Refer to P.21-3.)

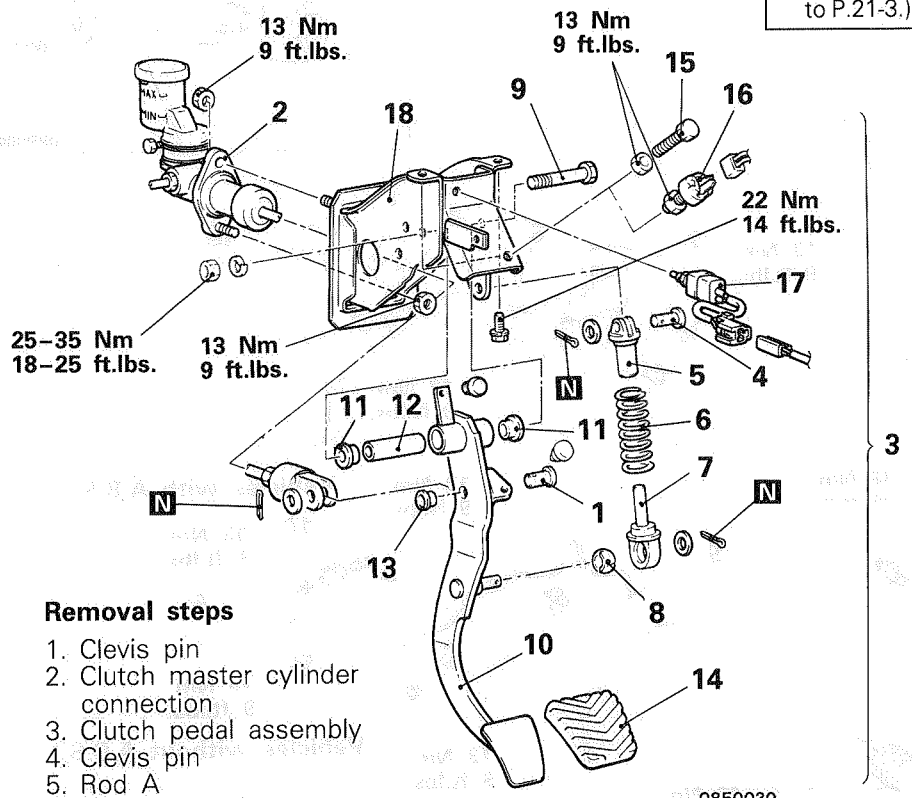

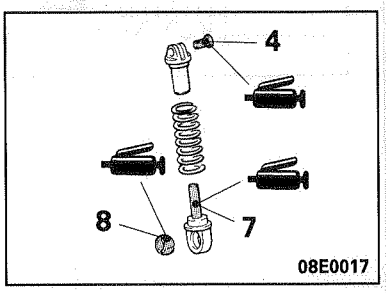

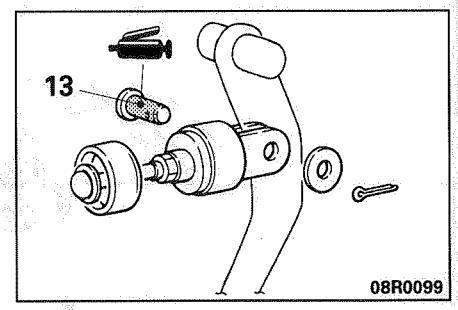

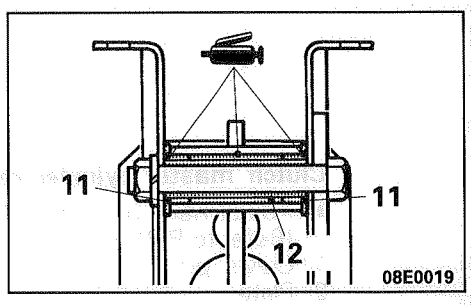

Removal steps
1. Clevis pin
2. Clutch master cylinder connection
3. Clutch pedal assembly
4. Clevis pin
5. Rod A
6. Turnover spring
7. Rod B
8. Bushing
9. Pedal shaft
10. Clutch pedal
11. Bushings
12. Spacer
13. Bushings
14. Pedal pad
15. Stopper bolt <Vehicles without auto-cruise control system>
16. Clutch switch <Vehicles with auto-cruise control system>
17. Interlock switch
18. Clutch pedal bracket

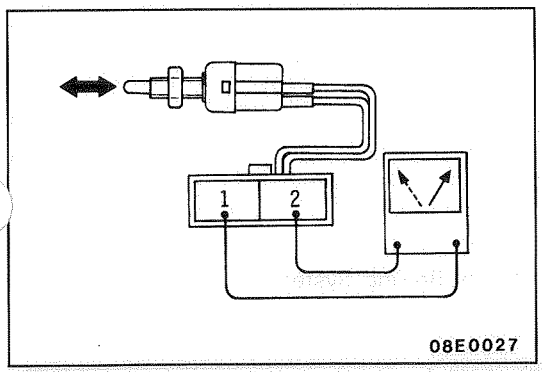

INSPECTION

M21PCAM

- Check the pedal shaft and bushing for wear.
- Check the clutch pedal for bend or torsion.
- Check the turnover spring for damage or deterioration.
- Check the pedal pad for damage or wear.

INTERLOCK SWITCH INSPECTION

(1) Connect an ohmmeter to terminals ① and ②.
(2) If there is continuity when the switch is pressed and no nontinuity when returned, it is normal.

CLUTCH CONTROL

REMOVAL AND INSTALLATION

Pre-removal Operation
- Draining of Clutch Fluid

Post-installation Operation
- Supplying Clutch Fluid
- Bleeding (Refer to P.21-4.)

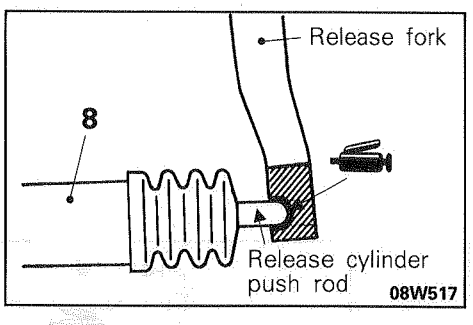

M21JA--

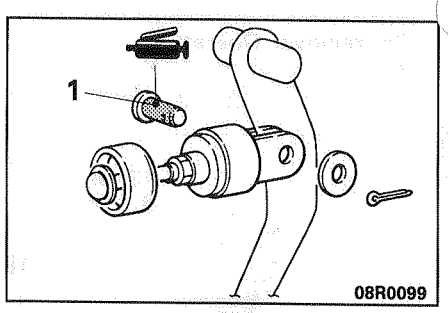

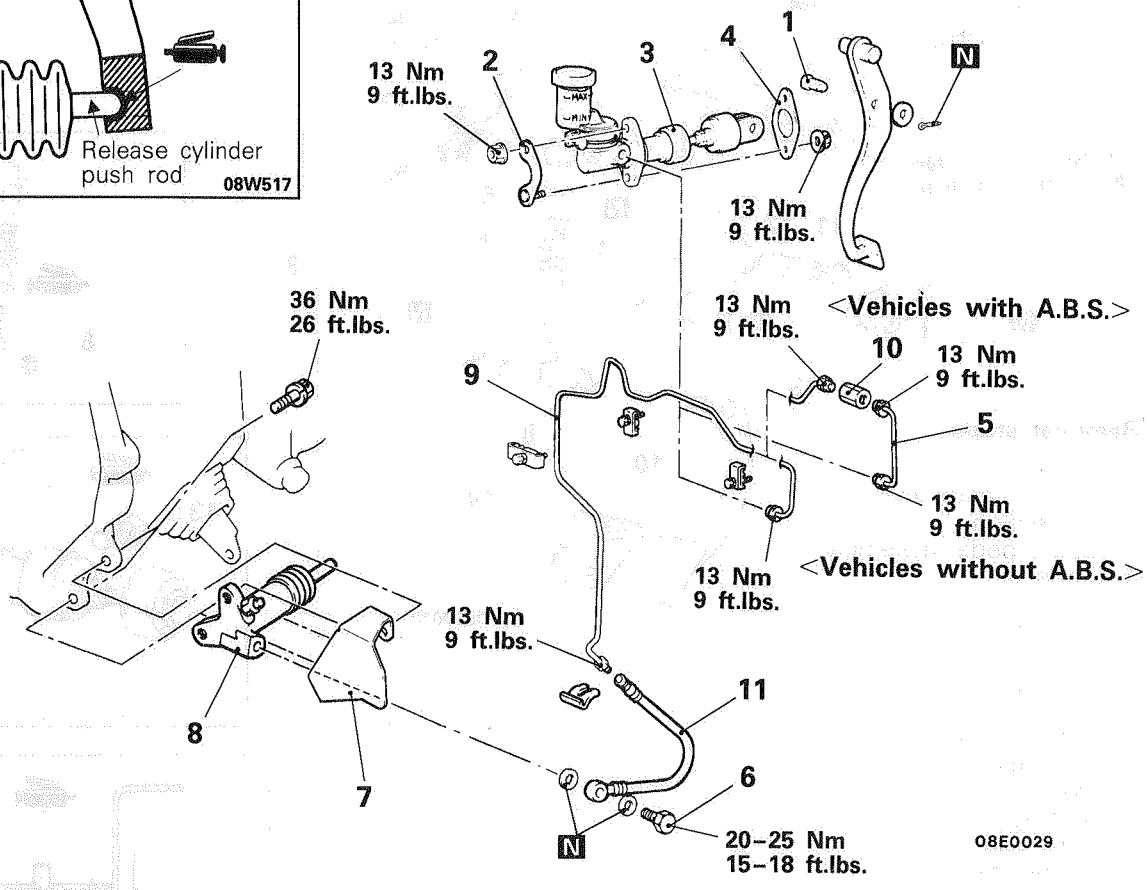

Clutch master cylinder removal steps
- Adjustment of Clutch Pedal (Refer to P.21-3.)

1. Clevis pin
2. Plate
3. Clutch master cylinder
4. Sealer
5. Clutch pipe A <Vehicles with A.B.S.>

Clutch release cylinder removal steps

6. Eye bolt
7. Heat protector
8. Clutch release cylinder

Clutch pipe B, Connector removal

9. Clutch pipe B
10. Connector <Vehicles with A.B.S.>

Clutch hose removal steps

6. Eye bolt
11. Clutch hose

NOTE
A.B.S.: Anti-lock Braking System

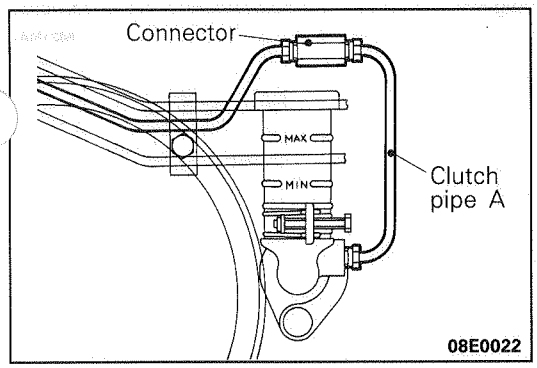

SERVICE POINTS OF REMOVAL M21JBAI

3. REMOVAL OF CLUTCH MASTER CYLINDER

For vehicles with A.B.S., remove the connector and the clutch pipe A assembly, and remove the clutch master cylinder from the vehicle with the clutch pipe still attached.

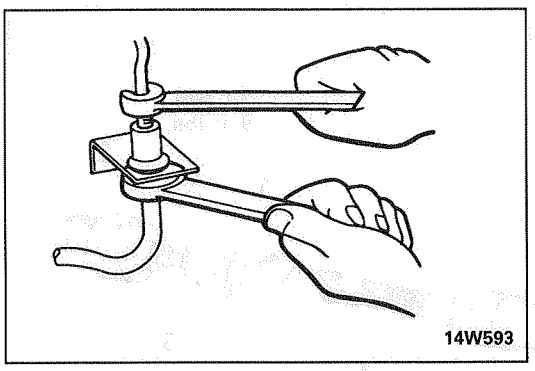

9. REMOVAL OF CLUTCH PIPE B

(1) Remove the brake booster and link assembly <vehicles with auto-cruise control>.
(Refer to GROUP 35 – Brake Booster and GROUP 13 – Auto-cruise Control.)
(2) Holding the nut at the clutch hose side, loosen the flare nut of the clutch pipe.

11. REMOVAL OF CLUTCH HOSE

Holding the nut at the clutch hose side, loosen the flare nut of the clutch pipe.

INSPECTION M21JCAG

- Check the master cylinder or clutch hose for fluid leakage.
- Check the clutch hose or pipe for cracks or clogging.

CLUTCH MASTER CYLINDER

M21NA--

DISASSEMBLY AND REASSEMBLY

Disassembly steps

1. Piston stop ring
2. Damper and push rod
3. Boot
4. Piston assembly
5. Reservoir cap
6. Reservoir band
7. Reservoir
8. Master cylinder body

Piston repair kit

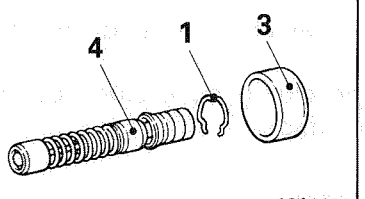

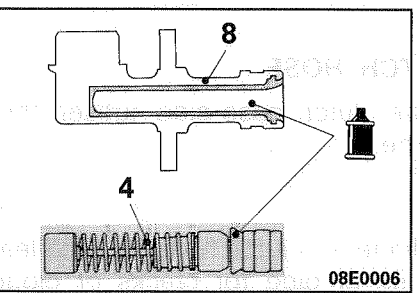

Clutch fluid: Brake fluid DOT3 or DOT4

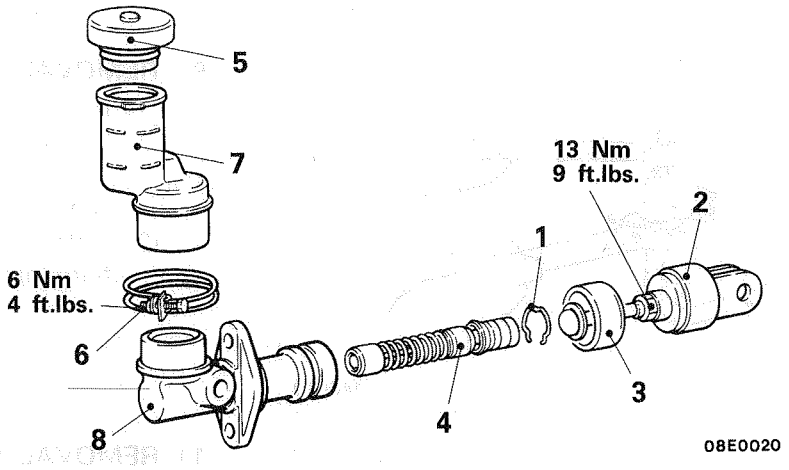

SERVICE POINTS OF DISASSEMBLY

M21NBAF

4. REMOVAL OF PISTON ASSEMBLY

Caution

1. **Do not damage the master cylinder body and piston assembly.**
2. **Do not disassemble piston assembly.**

INSPECTION

M21NCAD

- Check the inside cylinder body for rust or scars.
- Check the piston cup for wear or deformation.
- Check the piston for rust or scars.
- Check the clutch tubre connection part for clogging.

MANUAL TRANSMISSION

CONTENTS

M22AA--

CONTROL LEVER ASSEMBLY 9

SERVICE ADJUSTMENT PROCEDURES 5

- Center Differential Lock Detection Switch Check 6
- 2WD/4WD Detection Switch Check 6
- Center Differential Lock Operation Detection Switch Check 6
- 4WD Indicator Control Unit Inspection 7
- 4WD Operation Detection Switch Check .. 6
- HI/LO Detection Switch Check 6
- Oil Level Check 5
- Oil Replacement 5
- Speedometer Cable Replacement 8
- Transfer Oil Seals Replacement 5

SPECIAL TOOLS 3

SPECIFICATIONS 2

- General Specifications 2
- Lubricants 2
- Sealants and Adhesives 2

TRAMISSION AND TRANSFER ASSEMBLY 11

TROUBLESHOOTING 4

- Gears slip out
- Noise, Vibration
- Oil is leaking
- Shifting gears is hard or troublesome

SPECIFICATIONS

GENERAL SPECIFICATIONS

M22CA--

Items	Specifications
Models	V5MT1
Transmission	
Type	5-speed
Gear ratio	
1st	3.918
2nd	2.261
3rd	1.395
4th	1.000
5th	0.829
Reverse	3.925
Final gear ratio	4.625
Speedometer gear ratio	26/8
Transfer	
Type	Active Trac 4WD
Gear ratio	
High	1.000
Low	1.925
Drive system	
Front wheel	Chain drive
Rear wheel	Direct drive

LUBRICANTS

M22CD--

Items	Specified lubricant	Quantity
Transmission	Hypoid gear oil SAE 75W–85W conforming to API classification GL-4 or higher	2.5 dm^3 (2.6 qts.)
Transfer	Hypoid gear oil SAE 75W–85W conforming to API classification GL-4 or higher	2.3 dm^3 (2.4 qts.)
Transfer oil seal lip	Hypoid gear oil SAE 75W–90 or 75W–85W conforming to API classification GL-4 or higher	As required

SEALANTS AND ADHESIVES

M22CE--

Items	Specified sealants and adhesives
Outer circumference of speedometer cable grommet	3M ATD Part No. 8001, 8011 or equivalent
Control lever assembly	
Control lever gasket	3M ATD Part No. 8663 or equivalent
Control lever assembly mounting bolt	3M Stud Locking No. 4170 or equivalent
Transmission and transfer assembly	
Control housing gasket	3M ATD Part No. 8663 or equivalent
Control housing mounting bolt	3M Stud Locking No. 4170 or equivalent

TSB Revision

SPECIAL TOOLS

M22DA--

Tool	Number	Name	Use
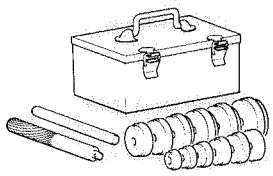	MB990925	Bearing and oil seal installer set	Installation of oil seal (MB990928, MB990938)

MB990925

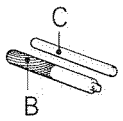

Bar (snap-in type)

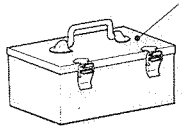

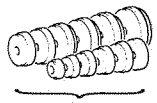

Installer adaptor

	Contents of new tool (MB990925)	Current tools	O.D. mm (in.)		Contents of new tool (MB990925)	Current tools	O.D. mm (in.)
A	MB990926	MB990272 MB990658 MB990659	39 (1.54)	A	MB990933	MB990307 MB990724	63.5 (2.50)
	MB990927	MB990264 MB990680	45 (1.77)		MB990934	MB990766 MB990807	67.5 (2.66)
	MB990928	MB990271 MB990808	49.5 (1.95)		MB990935	MB990133 MB990308 MB990762	71.5 (2.81)
	MB990929	MB990306	51 (2.01)		MB990936	MB990718	75.5 (2.97)
	MB990930	MB990283	54 (2.13)		MB990937	MB990309	79 (3.11)
	MB990931	MB990681 MB990764	57 (2.24)	B	MB990938	MB990124	-
	MB990932	MB990263	61 (2.40)	C	MB990939	-	-

TROUBLESHOOTING

M22EAACa

Trouble	Cause	Service Operation
Noise, Vibration	The transmission and engine mount is loose or damaged.	Tighten or replace the mount.
	The end play of each shaft is not proper.	Correct the end play.
	Gears are worn or damaged.	Replace the gears.
	The oil grade is improper.	Replace with the specified oil.
	The oil level is low.	Add oil.
	The engine's idling speed is not proper.	Adjust the idling speed.
Oil is leaking	The oil seal or O-ring is damaged.	Replace the oil seal or O-ring.
Shifting gears is hard or troublesome	The synchronizer ring and gear cones mesh poorly or are worn.	Repair or replace.
	The synchronizer spring is fatigued.	Replace the synchronizer ring.
	The oil grade is improper.	Replace with the specified oil.
Gears slip out	The gear shift forks are worn or the poppet spring is broken.	Replace the shift forks or poppet spring.
	The clearance between the synchronizer hub and sleeve is too large.	Replace the synchronizer hub and spring.

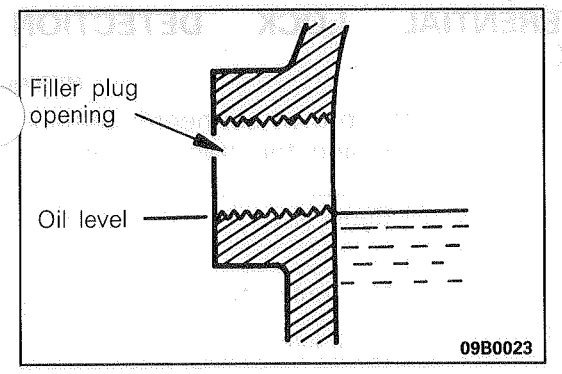

SERVICE ADJUSTMENT PROCEDURES

OIL LEVEL CHECK M22FBAC

Inspect each component for evidence of leakage, and check the oil level by removing the filler plug. If the oil is contaminated, it is necessary to replace it with new oil.

1. Oil level should be at the lower portion of the filler plug hole.
2. Check that the transmission oil is not noticeably dirty, and that it has a suitable viscosity.

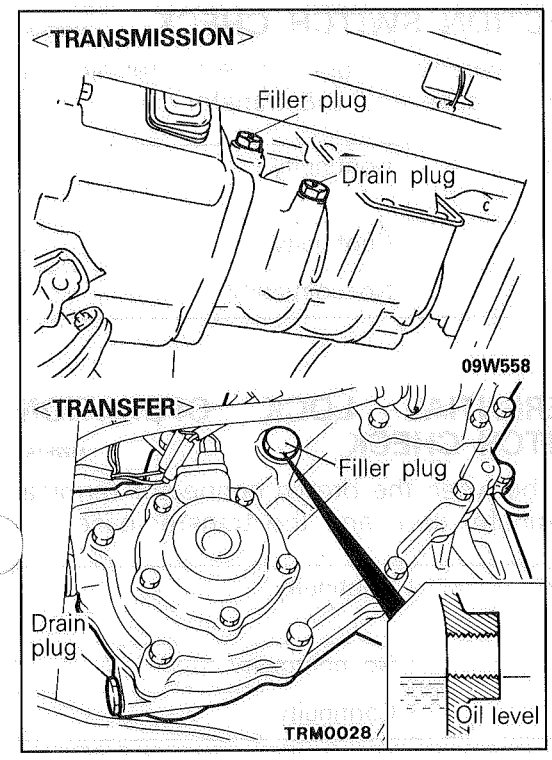

OIL REPLACEMENT M22FFAA

1. Remove oil filler plug and oil drain plug.
2. Drain oil.
3. Tighten the oil drain plug to the specified torque.
4. Fill with specified oil till the level comes to the lower portion of oil filler plug hole.

Specified transmission oil: Hypoid gear oil SAE 75W-85W conforming API classification GL-4 or higher

Quantity:

Transmission	**2.5 dm³ (2.6 qts.)**
Transfer	**2.3 dm³ (2.4 qts.)**

5. Tighten the filler plug to the specified torque.

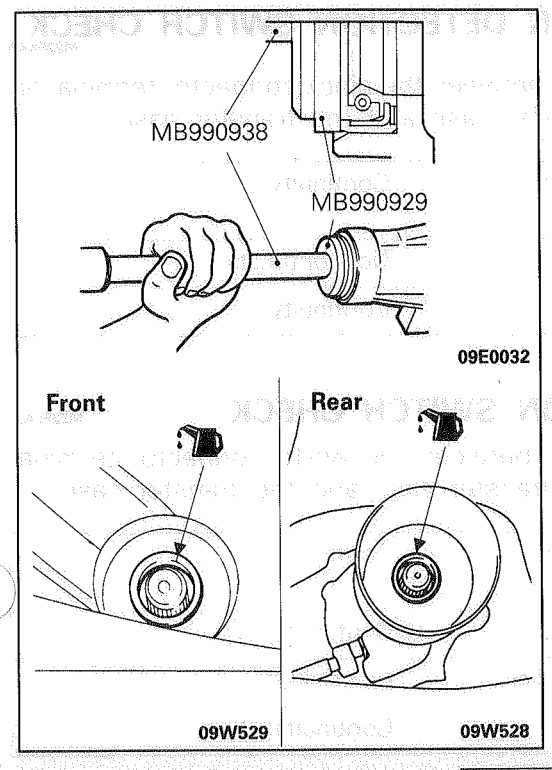

TRANSFER OIL SEALS REPLACEMENT M22FGAC

1. Disconnect the propeller shaft from the transfer. (Refer to GROUP 25 – Propeller Shaft.)
2. Using a flat-tip (–) screwdriver, remove the oil seal.
3. Using the special tool, tap the transfer oil seal into the transfer.
   Note in illustration the direction of installation of transfer oil seal.
4. Apply a coating of the transmission oil to the lip of the oil seal.

Transmission oil: Hypoid gear oil SAE 75W-90 or 75W-85W conforming API GL-4 or higher

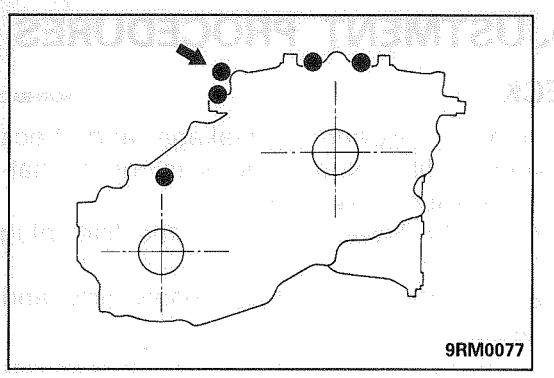

CENTER DIFFERENTIAL LOCK DETECTION SWITCH CHECK

M22FHAA

Check the continuity between the brown connector termina on the side of the transfer case and the transfer case.

Transfer control lever position	Continuity
4H	No continuity
4HLc	Continuity

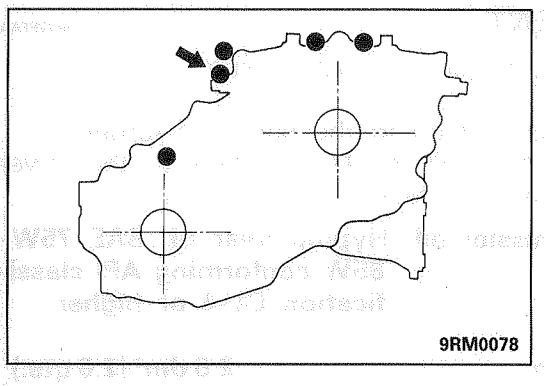

2WD/4WD DETECTION SWITCH CHECK

M22FGAA

Check the continuity between the black connector terminal on the side of the transfer case and the transfer case.

Transfer control lever position	Continuity
2H	Continuity
4H	No continuity

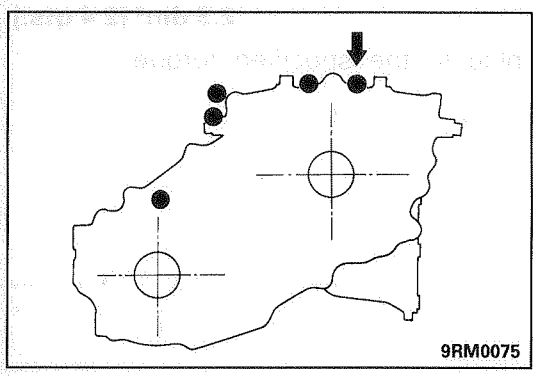

CENTER DIFFERENTIAL LOCK OPERATION DETECTION SWITCH CHECK

M22FJAA

Check the continuity between the brown connector terminal on the top of the transfer case and the transfer case.

Transfer control lever position	Continuity
4H	No continuity
4HLc	Continuity

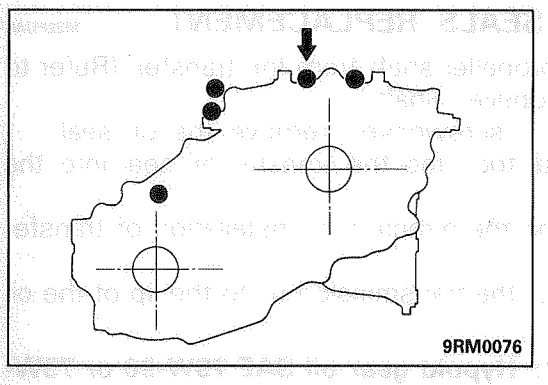

4WD OPERATION DETECTION SWITCH CHECK

M22FKAA

Check the continuity between the black connector terminal on the top of the transfer case and the transfer case.

Transfer control lever position	Continuity
2H	No continuity
4H	Continuity

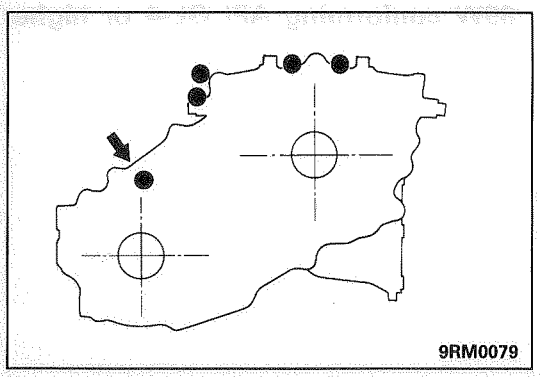

HI/LO DETECTION SWITCH CHECK

M22FLAA

Check the continuity between the white connector terminal on the side of the transfer case and the transfer case.

Transfer control lever position	Continuity
4HLc	Continuity
N (between 4HLc and 4LLc)	No continuity
4LLc	Continuity

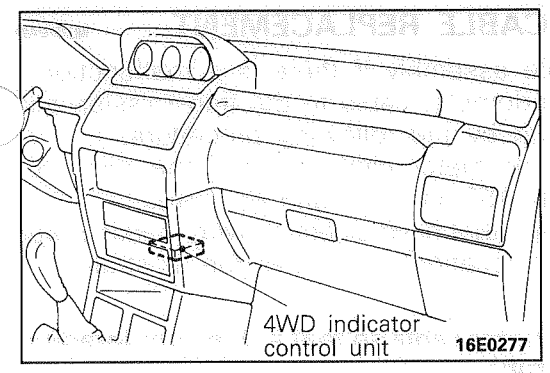

4WD INDICATOR CONTROL UNIT INSPECTION

M22FMAA

1. Remove the radio or CD player. (Refer to GROUP 54 – Radio and Stereo.)
2. Remove the 4WD indicator control unit.
3. Measure the voltage at the terminals under each condition.
4. Carry out the voltage measurements with the harness disconnected from the control unit. Insert the probe from the rear of the connector and take the measurement between terminal ⑧ (earth terminal) and the respective terminals.



(Control unit side)

Terminal No.	Inspection item		Inspection condition			Terminal voltage
3	Ignition switch (IG²)		Ignition switch (IG2)		OFF	0 V
					ON	System voltage
4	Combination meter (4WD indicator lamp)	Center differential lock indicator lamp	Ignition switch: ON	Transfer lever position	4H	System voltage
					4HLc	Less than 1.5V
10		Front wheel lamp	Ignition switch: ON		In 2WD	0 V
					In 4WD	System voltage*
9		Rear wheel lamp	Ignition switch: ON	Transfer lever position	N	0 V
					4HLc, 4LLc	System voltage*
6	Free-wheel engage switch		Ignition switch: ON		In 2WD	system voltage*
					In 4WD	0 V
1	HI/LOW detection switch		Ignition switch: ON	Transfer lever position	N	System voltage*
					4HLc, 4LLc	0 V
2	4WD operation detection switch		Ignition switch: ON	Transfer lever position	2H	System voltage*
					4H	0 V
5	Centre differential lock detection switch		Ignition switch: ON	Transfer lever position	4H	System voltage*
					4HLc	0 V
7	Centre differential lock operation detection switch		Ignition switch: ON	Transfer lever position	4H	System voltage*
					4HLc	0 V

NOTE
System voltage marked with (*) is 1–2V lower than actual battery voltage.

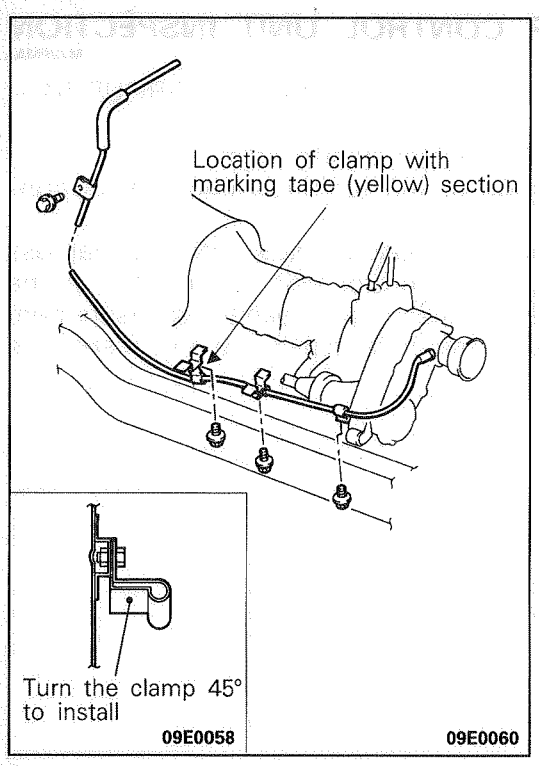

SPEEDOMETER CABLE REPLACEMENT M22FEAM

1. Replace the cable assembly if there is a malfunction.
2. Connect the speedometer cable to the transmission and connect the wiring by the following procedure.
   (1) Wire the speedometer cable so that the minimum bend radius is 150mm (5.91 in.) or more.
   (2) Wire the clamps that have a section with marking tape (yellow) in the locations shown in the illustration.

Caution
Wire the speedometer cable so that it does not interfere with the brake tube.

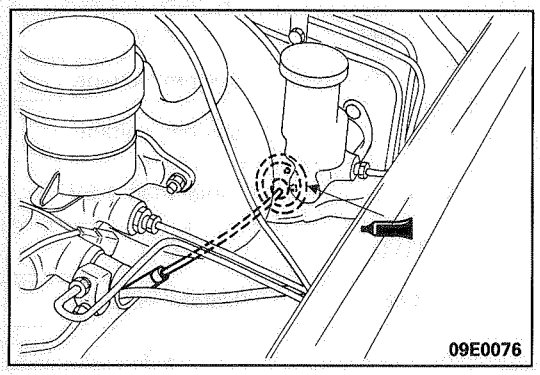

3. After installing the speedometer cable grommet to the towboard, apply specified sealant to the outside of the grommet.

Specified sealant: 3M ATD Part No. 8001, 8011 or equivalent

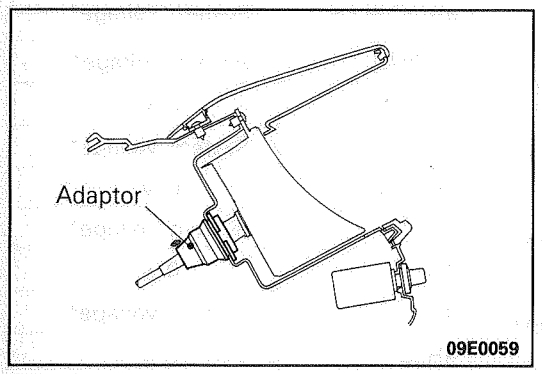

4. Install the adaptor to the speedometer cable, and install the speedometer.

Caution
If the cable connections are not made securely to the speedometer side and to the transmission side, the speedometer indications will not be accurate, and an abnormal noise will develop, so be sure to make the connections securely.

5. After connecting to the speedometer, pull the speedometer cable out from the engine compartment until the cable marking is fully withdrawn from the grommet, to remove all bends from the cable inside the instrument panel.

CONTROL LEVER ASSEMBLY

M22GA--

REMOVAL AND INSTALLATION

Pre-removal Operation
- Removal of Front Console Assembly (Refer to GROUP 52 – Floor Console.)
- Move the Transmission and Transfer Control Levers to the Following Positions.
  Transmission Control Lever: Neutral Position
  Transfer Control Lever: 4H (4 wheel drive–high range) Position

Post-installation Operation
- Installation of Front Console Assembly (Refer to GROUP 52 – Floor Console.)
- Check the Operation of the Transmission and Transfer Control Levers and the Movement in each Lever Position.

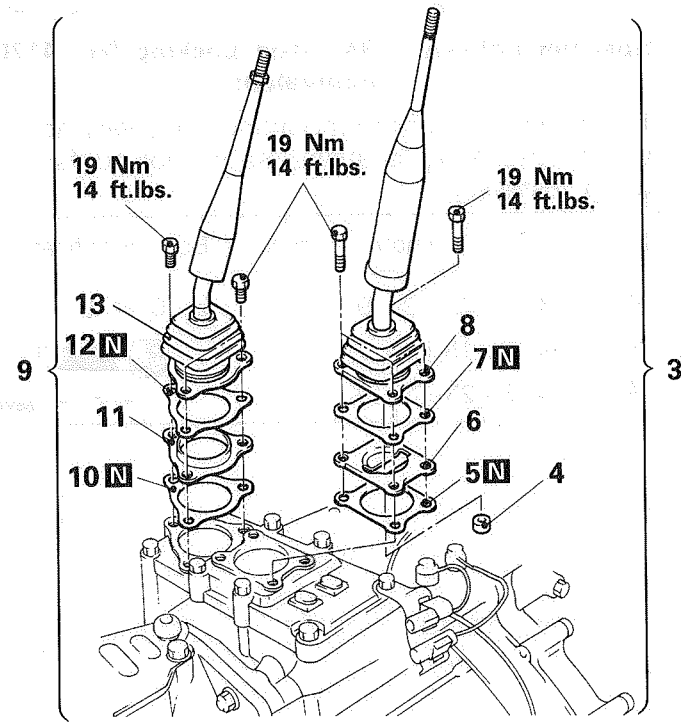

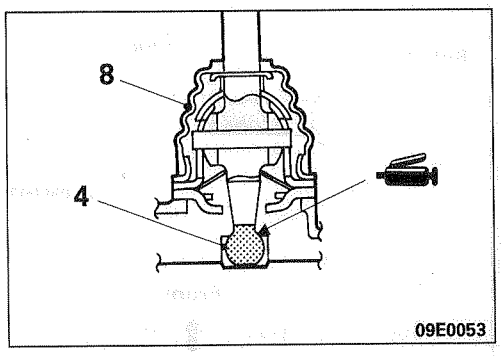

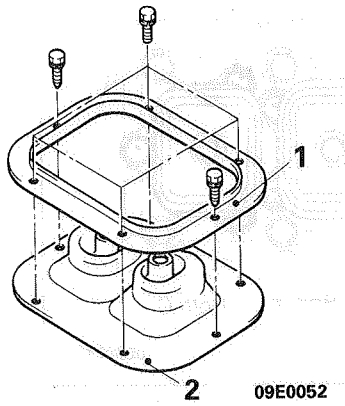

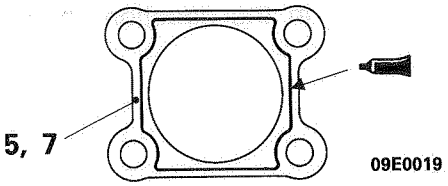

Apply the sealant to both sides of the gasket (No. 5 and 7).

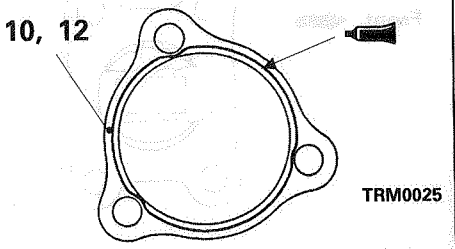

Apply the sealant to both sides of the gasket (No. 10 and 12).

Sealant: 3M ATD Part No. 8663 or equivalent

Transmission control lever assembly removal steps

1. Retainer
2. Control lever boot
3. ◆◆ Transmission control lever assembly
4. Control lever bushing
5. Gasket
6. ◆◆ Stopper plate
7. Gasket
8. Transmission control lever

Transfer control lever assembly removal steps

1. Retainer
2. Control lever boot
9. ◆◆ Transfer control lever assembly
10. Gasket
11. Stopper plate
12. Gasket
13. Transfer control lever

TSB Revision

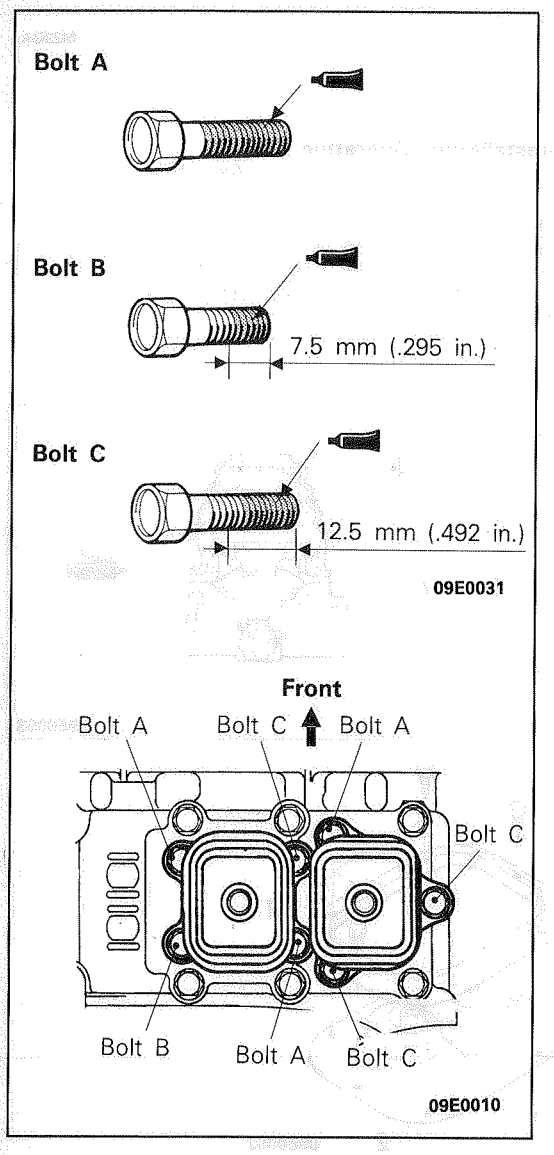

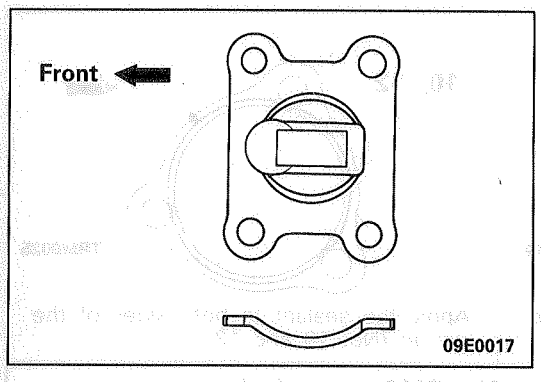

SERVICE POINTS OF INSTALLATION M22GDAI

9. INSTALLATION OF TRANSFER CONTROL LEVER ASSEMBLY/3. TRANSMISSION CONTROL LEVER ASSEMBLY

(1) Remove the adhesive sticking to the lever assembly mounting bolts.
(2) Use a tap (M8x1.25) to remove the adhesive sticking to the screw holes in the control housing, and clean it by blowing in air.
(3) Apply specified adhesive to the threads of the lever assembly mounting bolts.
Apply adhesive to the whole thread for bolt A, and to the areas shown in the illustration for bolts B and C.

Specified adhesive: 3M Stud Locking No. 4170 or equivalent

(4) The dimensions of the mounting bolts vary according to their mounting locations, so do not confuse them when installing.

Bolt	O.D. × Length mm(in.)	Bolt identification
④	[4] 8×22 (.3×.9)	④ D × L
④	[4] 8×18 (.3×.7)	
④	[4] 8×23 (.3×.9)	09Y512

6. INSTALLATION OF STOPPER PLATE

Install the stopper plate to the transmission control lever in the direction shown in the illustration.

TRANSMISSION AND TRANSFER ASSEMBLY

REMOVAL AND INSTALLATION

M22MA--

Pre-removal and Post-installation Operation
- Removal and Installation of Transmission and Transfer Control Lever Assembly (Refer to P.22-9.)
- Removal and Installation of Transfer Case Protector
- Removal and Installation of P.T.O. (Refer to GROUP 51 – P.T.O..)
- Removal and Installation of Front Exhaust Pipe
- Draining and Supplying of Transmission Oil and Transfer Oil (Refer to P.22-5.)
- Removal and Installation of Front and Rear Propeller Shaft (Refer to GROUP 25 – Propeller Shaft.)

	Nm	ft.lbs.	O.D. × Length mm (in.)	Bolt identification
A	75	54	⑦ 12×40 (.5×1.6)	⑦ D × L
B	90	65	⑦ 12×55 (.5×2.2)	
C	31	22	⑦ 10×55 (.4×2.2)	
D	36	26	⑦ 10×40 (.4×1.6)	
E	75	54	⑦ 12×35 (.5×1.4)	
F	42	30	⑦ 10×30 (.4×1.2)	
G	75	54	⑦ 12×50 (.5×2.0)	

09Y512

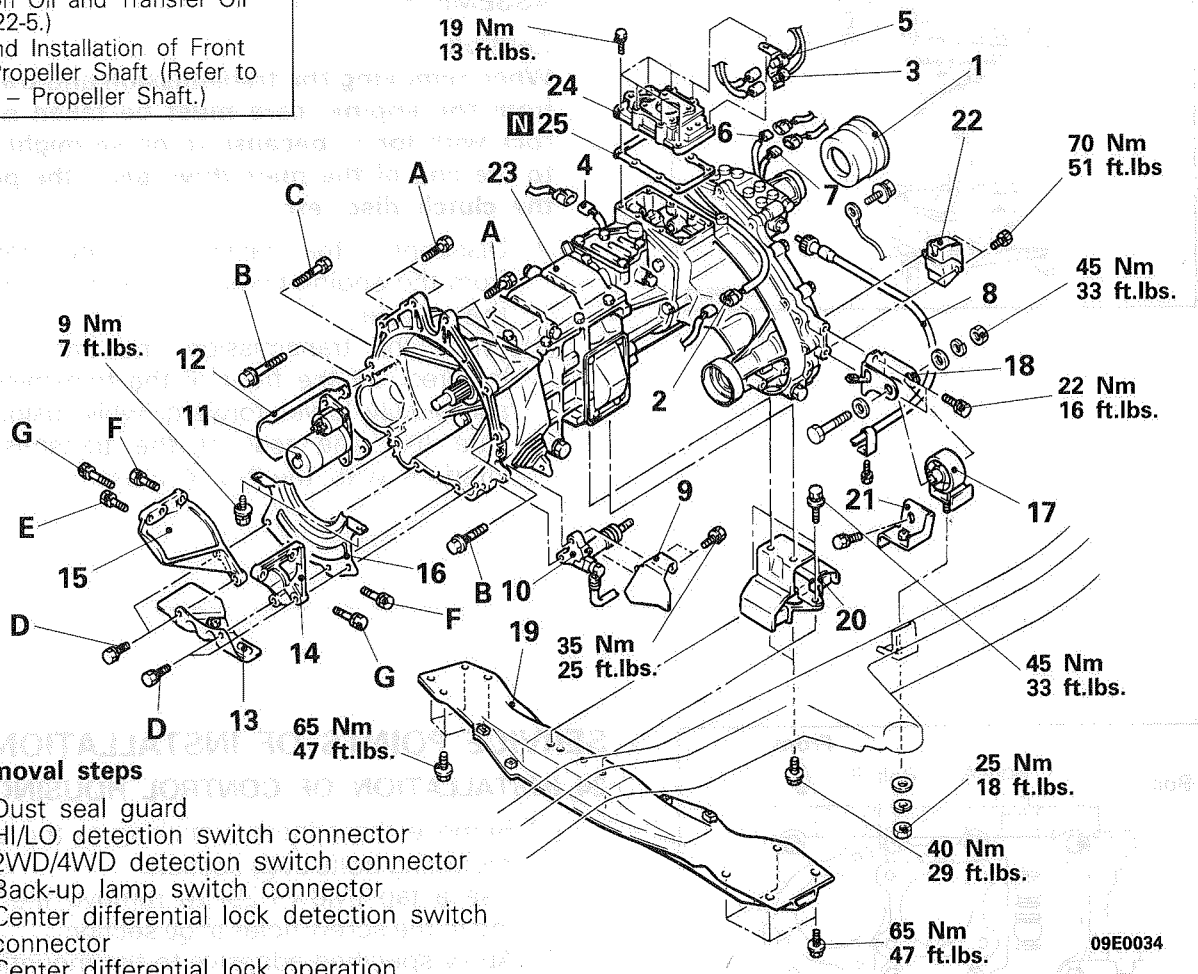

09E0034

Removal steps
1. Dust seal guard
2. HI/LO detection switch connector
3. 2WD/4WD detection switch connector
4. Back-up lamp switch connector
5. Center differential lock detection switch connector
6. Center differential lock operation detection switch connector
7. 4WD operation detection switch
8. Connection for speedometer cable
9. Heat protector
10. Connection for clutch master cylinder
11. Starter motor
12. Starter cover
13. Heat protector
14. Transmission stay
15. Transmission stay
16. Bell housing cover
17. Transfer roll stopper
18. Transfer mounting bracket
19. No. 2 crossmember
20. Engine mounting rear insulator
21. Transfer case protector bracket
22. Mass damper
23. Transmission and transfer assembly
24. Control housing
25. Gasket

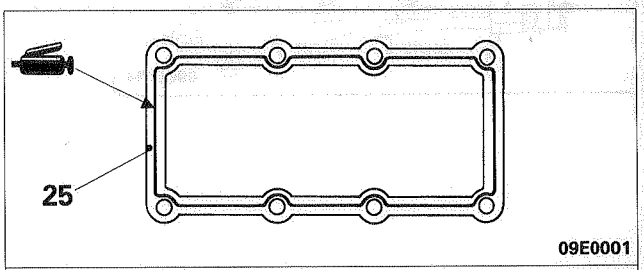

09E0001

Sealant: 3M ATD Part No. 8663 or equivalent

TSB Revision

SERVICE POINTS OF REMOVAL M22MBA

10. REMOVAL OF CLUTCH RELEASE CYLINDER

Remove the clutch release cylinder (with the clutch hose connected to it) from the transmission, and suspend it from the body by using a piece of wire or a similar method.

17. REMOVAL OF TRANSFER ROLL STOPPER

Before removing the transfer roll stopper, use a transmission jack to hold the transmission and transfer assembly.

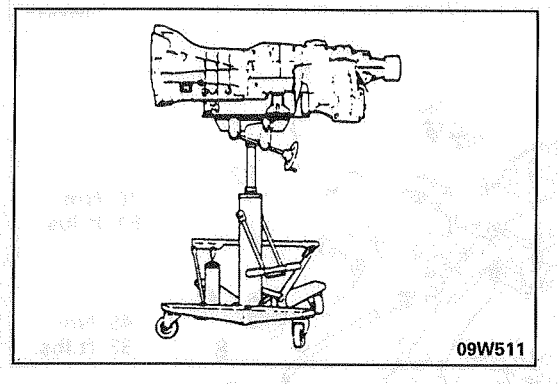

23. REMOVAL OF TRANSMISSION AND TRANSFER ASSEMBLY

Caution
When removing the transmission and transfer assembly from the engine, care must be taken not to shake or rock with force, because to do so might cause damage to the end of the main drive gear, the pilot bearing, or the clutch disc, etc.

(1) Disconnect the transmission and transfer assembly from the engine by pulling it slowly toward the rear of the vehicle.
(2) When the transmission and transfer assembly are lowered, tilt the front of the transmission downward and slowly lower forward, while using care to make sure that the rear of the transmission does not interfere with the No. 4 crossmember.

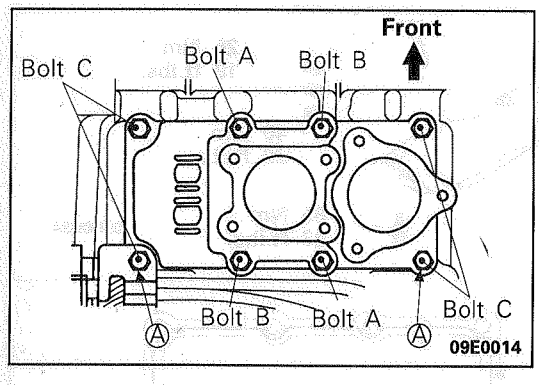

SERVICE POINTS OF INSTALLATION M22MDAQ

24. INSTALLATION OF CONTROL HOUSING

(1) Remove the adhesive sticking to the control housing mounting bolts at Ⓐ section.
(2) Use a tap (M8×1.25) to remove the adhesive sticking to the screw holes at Ⓐ section.
(3) Apply specified adhesive to the mounting bolt threads at Ⓐ section.

Specified adhesive: 3M Stud Locking No. 4170 or equivalent

(4) The dimensions of the mounting bolts vary according to their mounting locations, so do not confuse them when installing.

Bolt	O.D.×Length mm (in.)	Bolt identification
A	⑦ 8×40 (.3×1.6)	⑦ D × L
B	⑦ 8×40 (.3×1.6) (Reemer bolt)	D
C	⑦ 8×25 (.3×1.0)	L 09Y512

TSB Revision

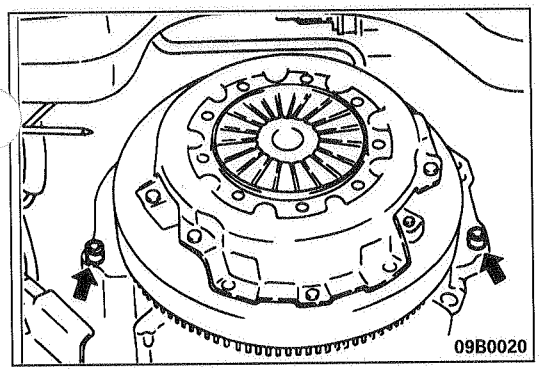

23. INSTALLATION OF TRANSMISSION AND TRANSFER ASSEMBLY

On the engine side, there are two centering locations. Make sure that the transmission mounting bolt holes are aligned with them before mounting the transmission and transfer assembly to the engine.

NOTES

AUTOMATIC TRANSMISSION

CONTENTS

M23AA--

GENERAL INFORMATION 2
SELECTOR LEVER ASSEMBLY 39
SERVICE ADJUSTMENT PROCEDURES 28
Adjustment of Inhibitor Switch and Control Cable 31
Automatic Transmission Fluid Change 29
Automatic Transmission Fluid Inspection 28
Center Differential Lock Detection Switch Check 30
Center Differential Lock Operation Detection Switch Check 30
4WD Indicator Control Unit Check 34
4WD Operation Detection Switch Check 30
HI/LO Detection Switch Check 30
Inhibitor Switch Check 31
Key Interlock Mechanism Check 32
Selector Lever Operation Check 32
Shift Lock Mechanism Check 33
Speedometer Cable Replacement 34
Throttle Cable Check and Adjustment 29
Transfer Oil Inspection and Change 29
Transfer Oil Seals Replacement 34
2WD/4WD Detection Switch Check 30
SPECIAL TOOLS 17
SPECIFICATIONS 14
General Specifications 14
Lubricants 16
Sealants and Adhesives 16
Service Specifications 15
TRANSMISSION AND TRANSFER ASSEMBLY 43
TRANSMISSION CONTROL 35
TRANSMISSION FLUID COOLER, HOSES, PIPES 41
TROUBLESHOOTING 18
A/T Safety-lock System Troubleshooting 26
Converter Stall Test 24
General 18
Governor Pressure Test 24
Hydraulic Pressure Test 24
Road Test 18

GENERAL INFORMATION

M23BABY

HYDRAULIC CIRCUIT

N (NEUTRAL)

TRA0203

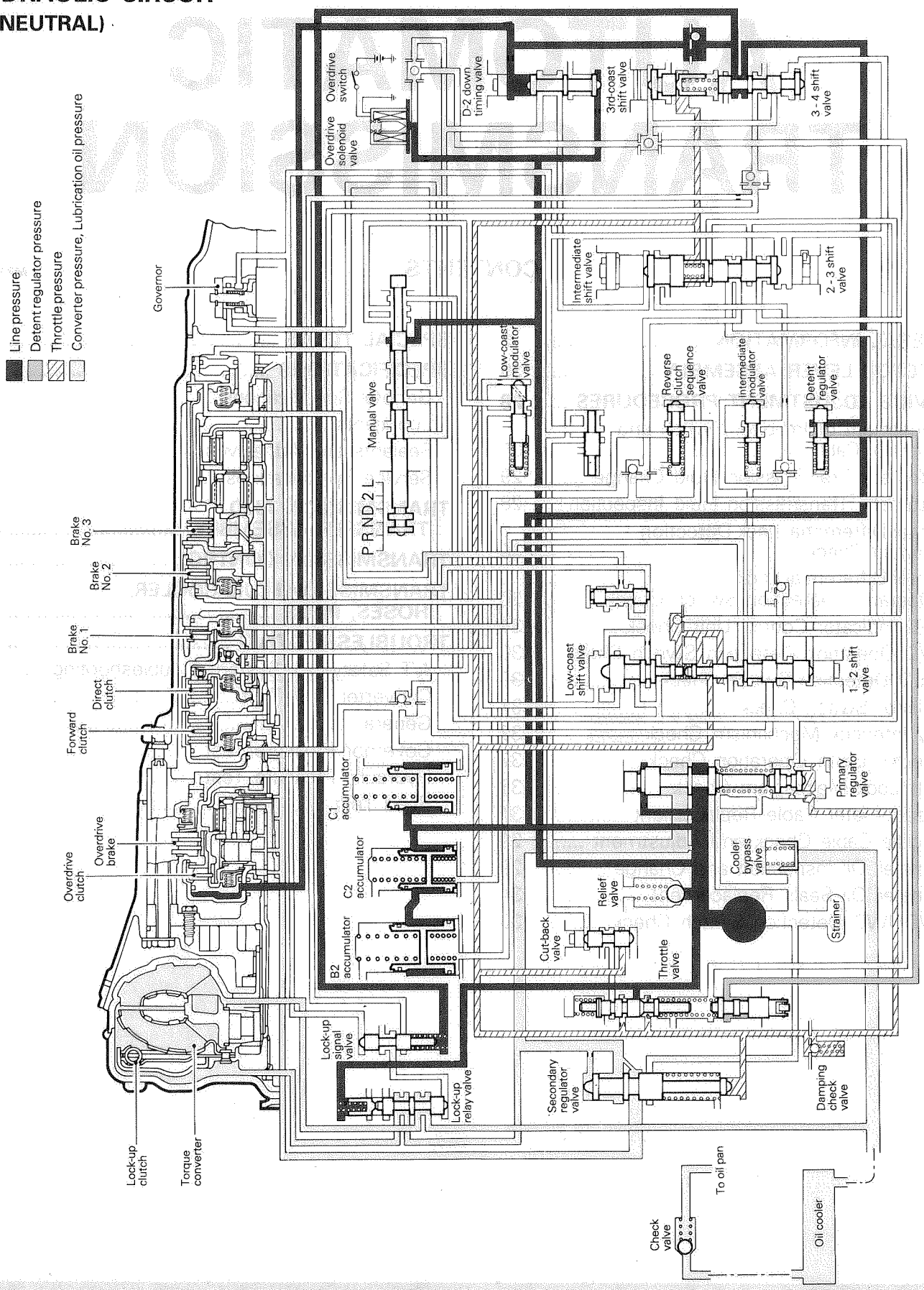

P (PARKING)

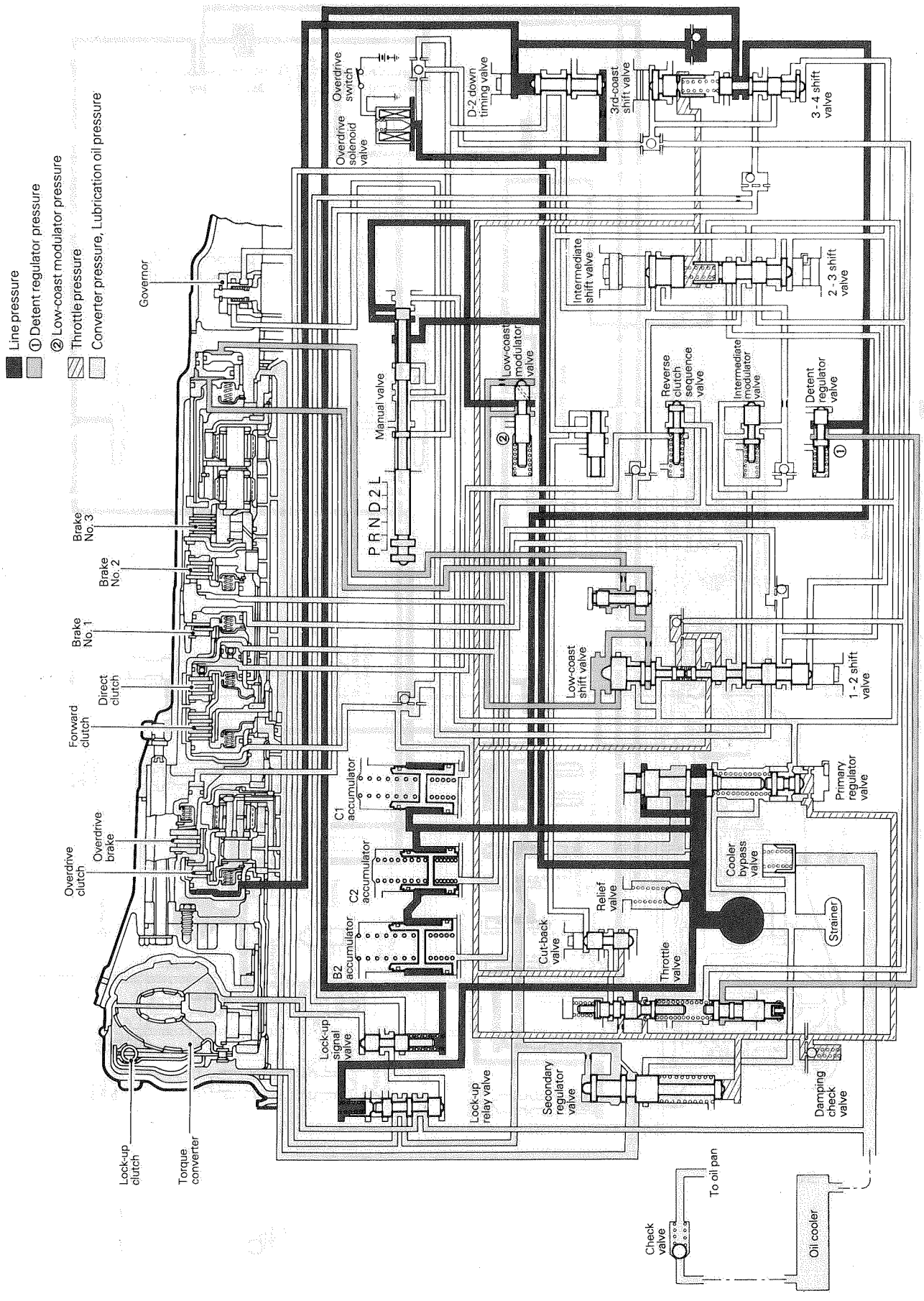

TSB Revision

D-1 (DRIVE 1ST)

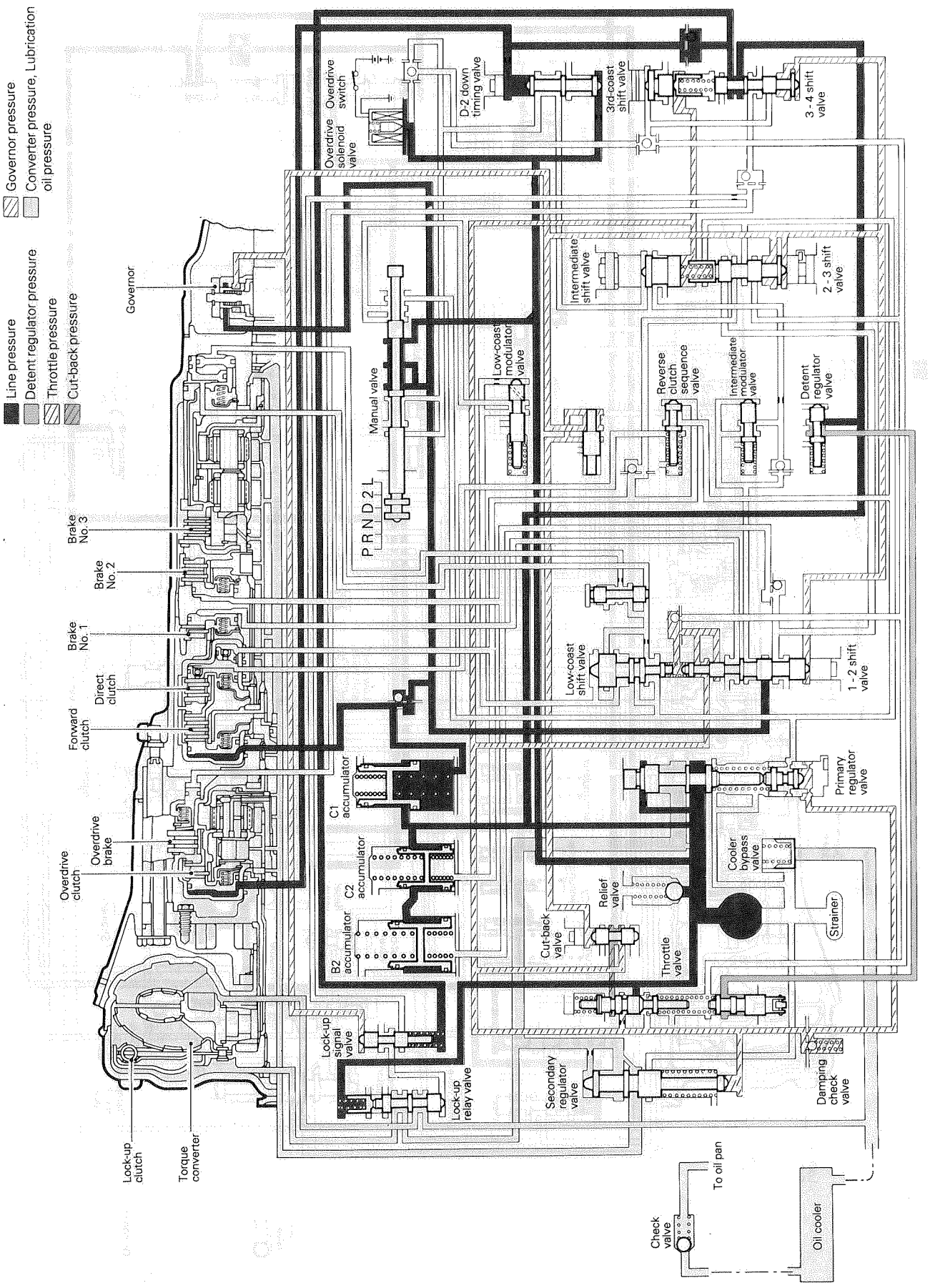
Governor pressure
Converter pressure, Lubrication oil pressure
Line pressure
Detent regulator pressure
Throttle pressure
Cut-back pressure
Governor
Overdrive switch
Overdrive solenoid valve
D-2 down timing valve
3rd-coast shift valve
3 - 4 shift valve
Intermediate shift valve
2 - 3 shift valve
Low-coast modulator valve
Manual valve
Reverse clutch sequence valve
Intermediate modulator valve
Detent regulator valve
P R N D 2 L
Brake No. 3
Brake No. 2
Brake No. 1
Direct clutch
Forward clutch
Overdrive brake
Overdrive clutch
Low-coast shift valve
1 - 2 shift valve
C1 accumulator
C2 accumulator
B2 accumulator
Primary regulator valve
Cooler bypass valve
Relief valve
Strainer
Cut-back valve
Throttle valve
Lock-up signal valve
Lock-up relay valve
Secondary regulator valve
Damping check valve
Lock-up clutch
Torque converter
To oil pan
Check valve
Oil cooler
TRA0205

D-2 (DRIVE 2ND)

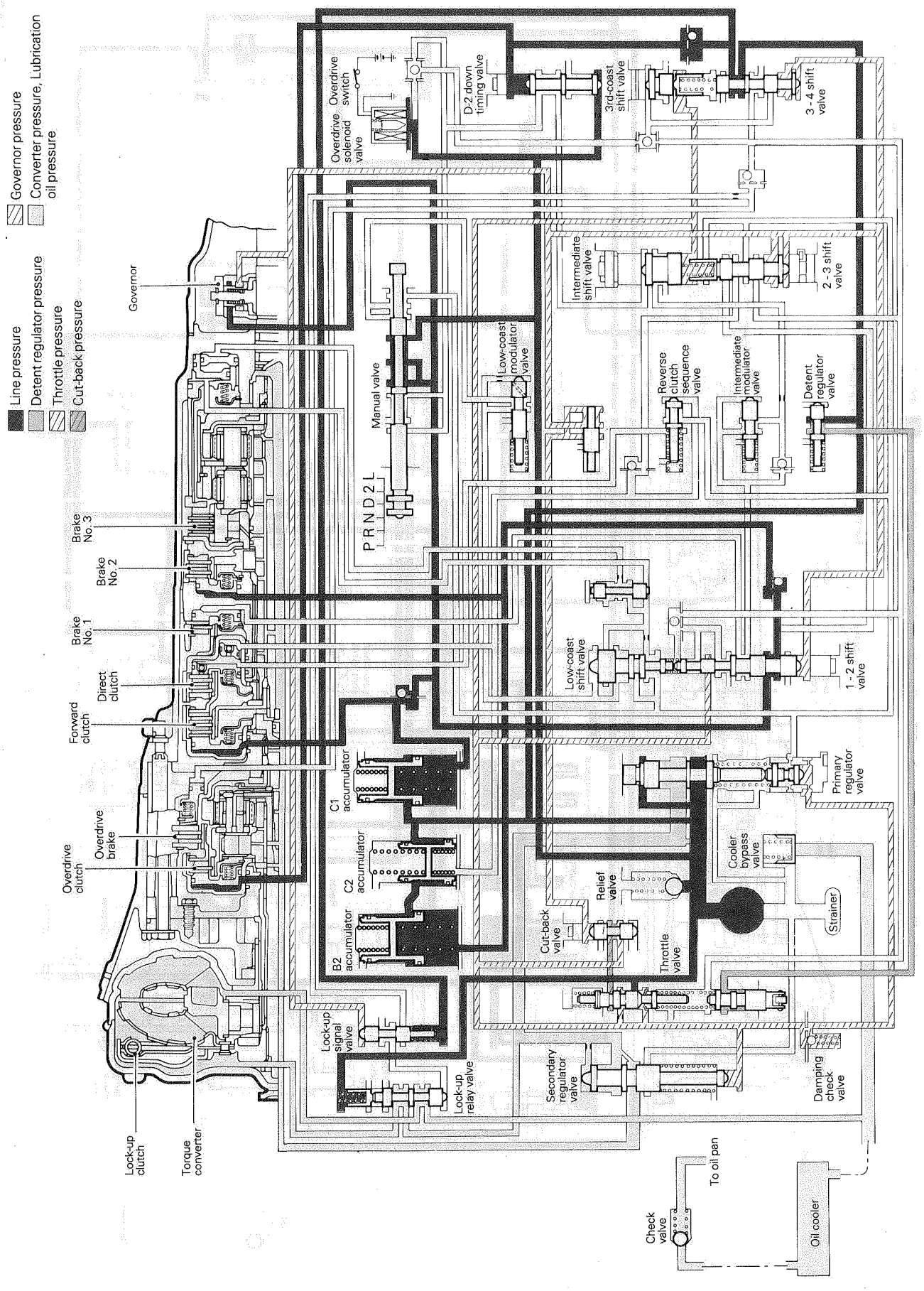
Governor pressure
Converter pressure, Lubrication oil pressure
Line pressure
Detent regulator pressure
Throttle pressure
Cut-back pressure
TRA0206
Governor
Overdrive switch
Overdrive solenoid valve
D-2 down timing valve
3rd-coast shift valve
3 - 4 shift valve
Intermediate shift valve
2 - 3 shift valve
Low-coast modulator valve
Manual valve
P R N D 2 L
Reverse clutch sequence valve
Intermediate modulator valve
Detent regulator valve
Brake No. 3
Brake No. 2
Brake No. 1
Direct clutch
Forward clutch
Low-coast shift valve
1 - 2 shift valve
Overdrive clutch
Overdrive brake
C1 accumulator
C2 accumulator
B2 accumulator
Primary regulator valve
Cooler bypass valve
Relief valve
Cut-back valve
Throttle valve
Strainer
Lock-up signal valve
Lock-up relay valve
Secondary regulator valve
Damping check valve
Lock-up clutch
Torque converter
To oil pan
Check valve
Oil cooler

D-3 (DRIVE 3RD)

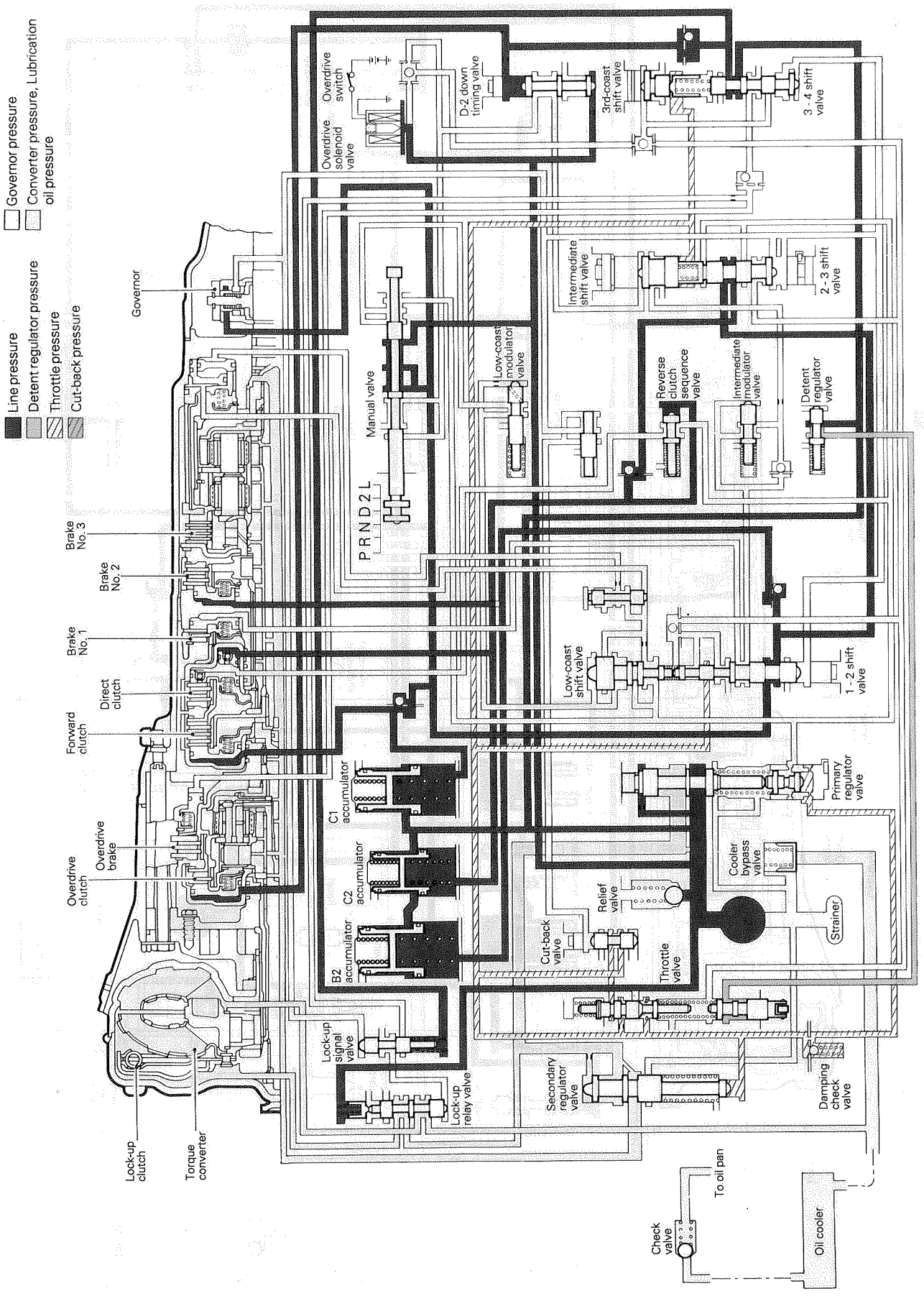
Governor pressure
Converter pressure, Lubrication oil pressure
Line pressure
Detent regulator pressure
Throttle pressure
Cut-back pressure
TRA0207
Governor
Overdrive switch
Overdrive solenoid valve
D-2 down timing valve
3rd-coast shift valve
3 - 4 shift valve
Intermediate shift valve
2 - 3 shift valve
Low-coast modulator valve
Manual valve
P R N D 2 L
Reverse clutch sequence valve
Intermediate modulator valve
Detent regulator valve
Brake No. 3
Brake No. 2
Brake No. 1
Direct clutch
Forward clutch
Overdrive brake
Overdrive clutch
Low-coast shift valve
1 - 2 shift valve
Primary regulator valve
C1 accumulator
C2 accumulator
B2 accumulator
Relief valve
Cooler bypass valve
Strainer
Cut-back valve
Throttle valve
Lock-up signal valve
Lock-up relay valve
Secondary regulator valve
Damping check valve
Lock-up clutch
Torque converter
To oil pan
Check valve
Oil cooler

D-4 (DRIVE 4TH)
LOCK-UP CLUTCH : OFF

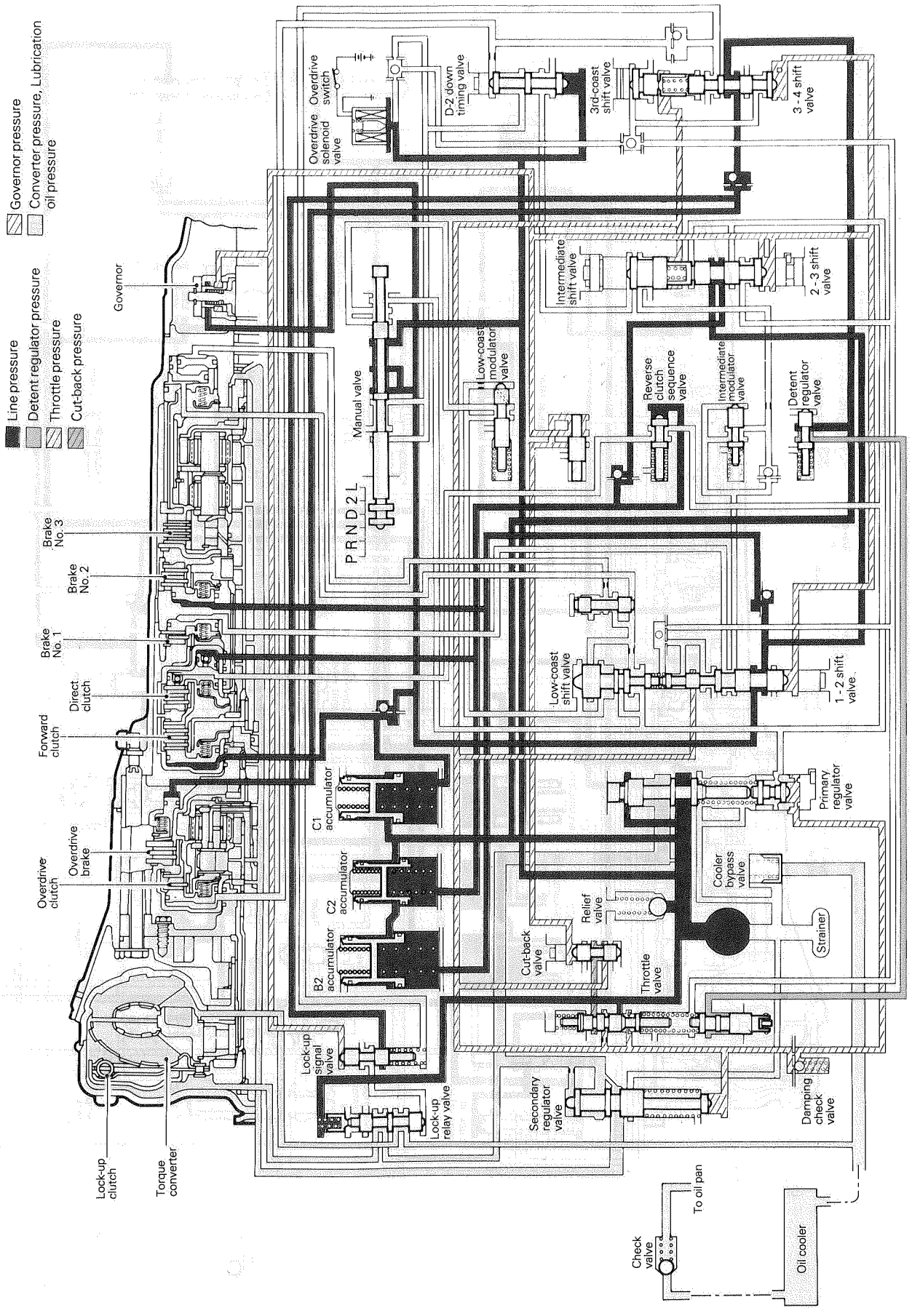

D-4 (DRIVE 4TH)

LOCK-UP CLUTCH : ON

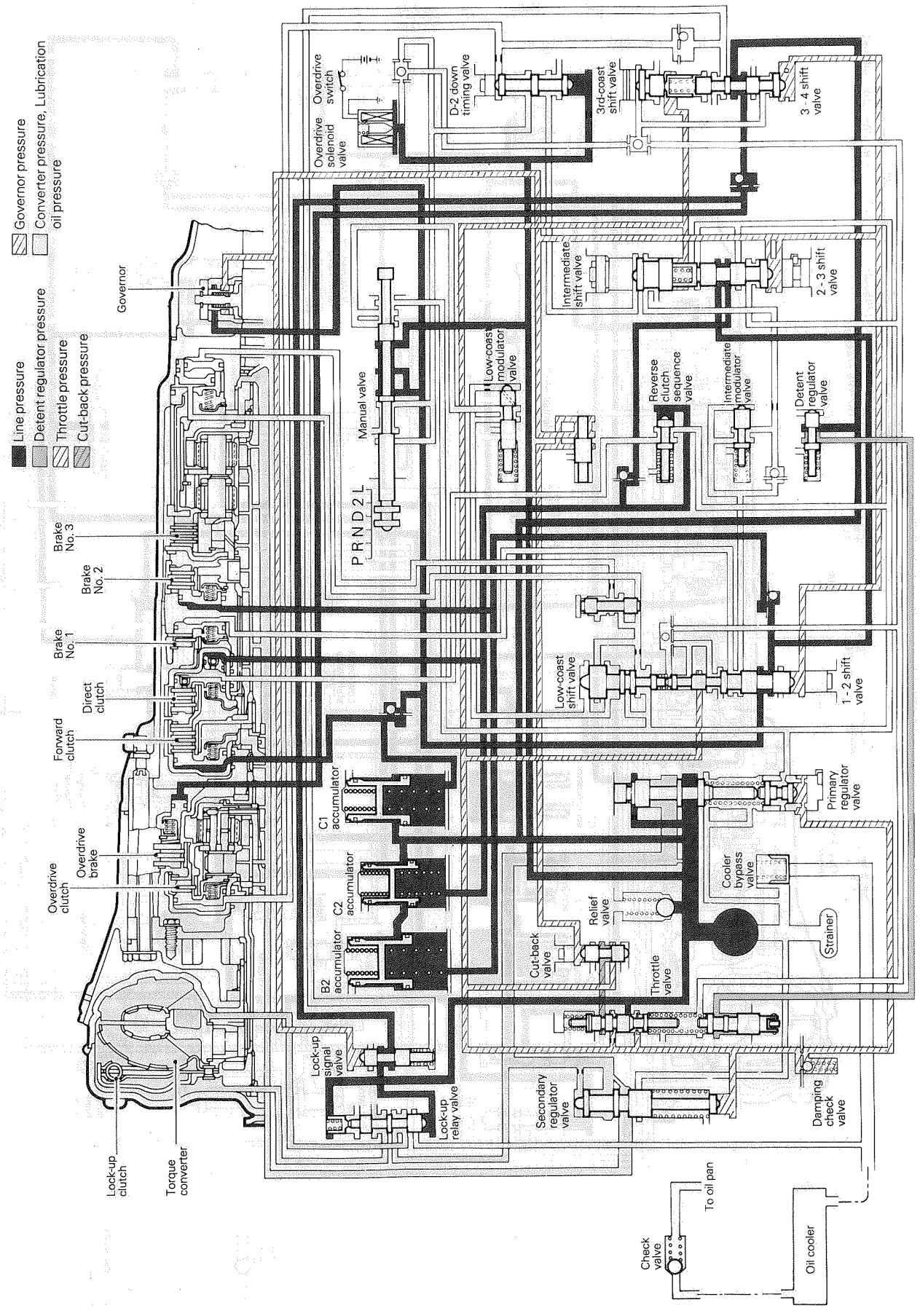

TRA0209

TSB Revision

D-K/D (DRIVE KICK DOWN)

4TH ➡ 3RD

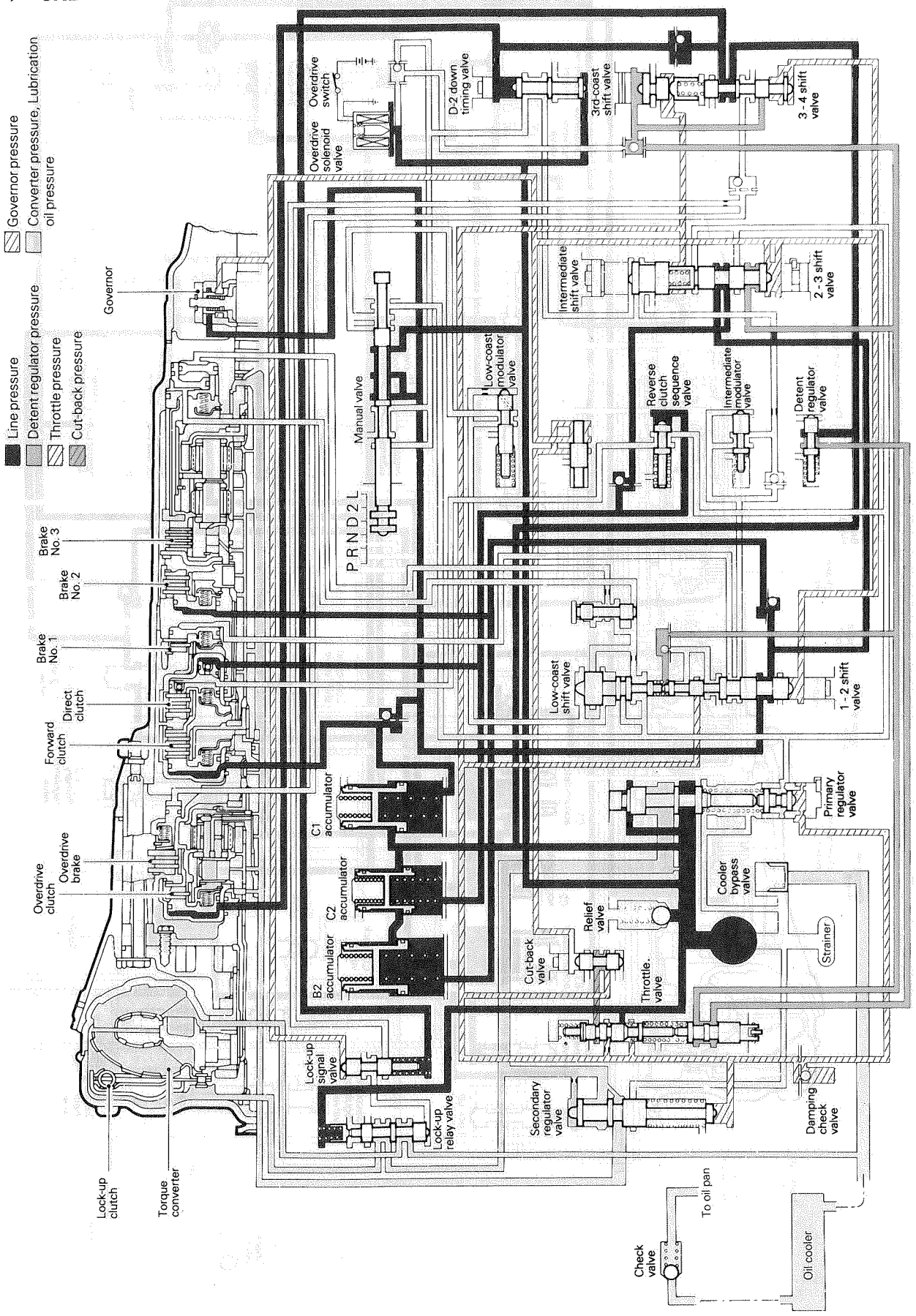

D-3 (DRIVE 3RD)
OVERDRIVE SWITCH : OFF

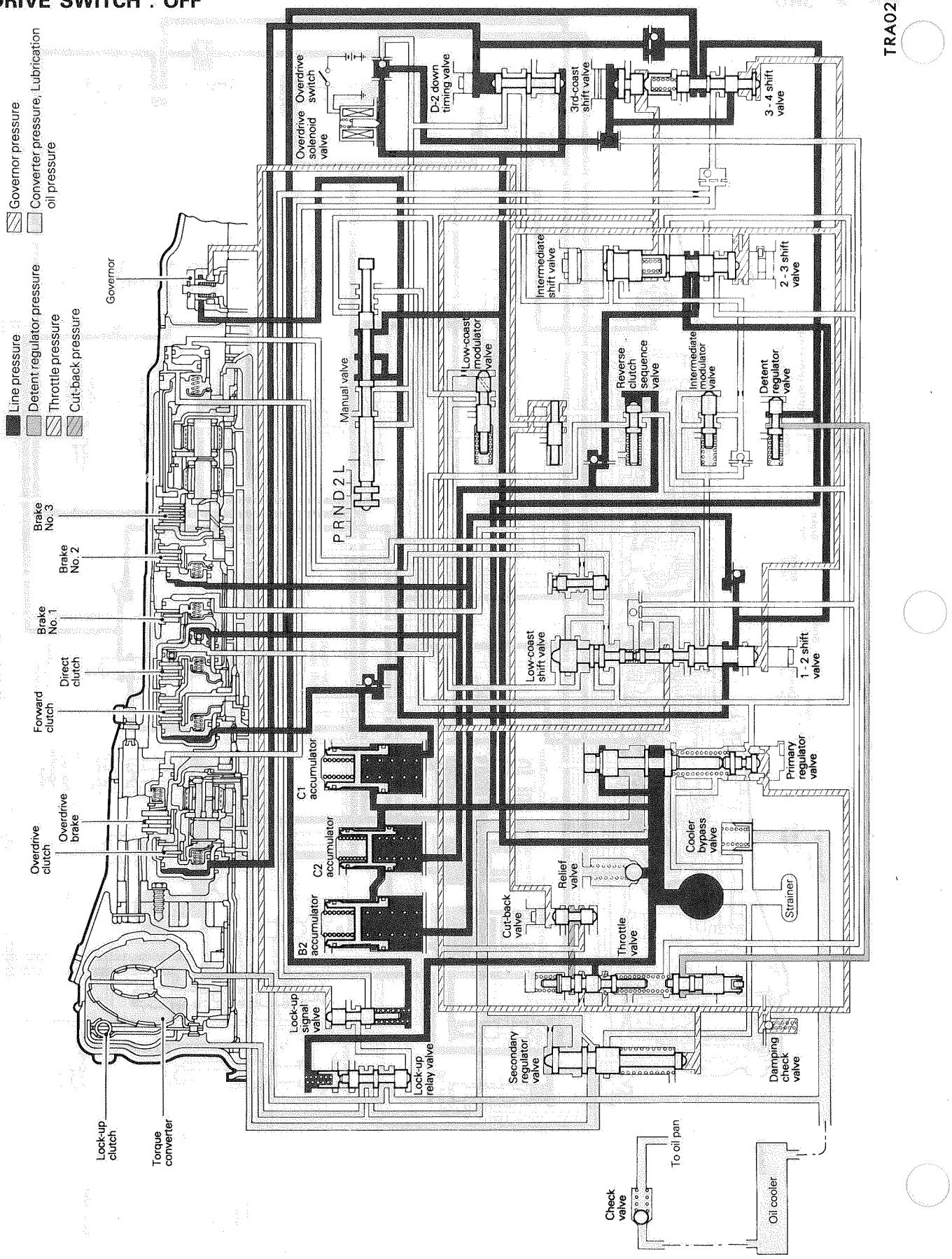

2-2 (SECOND 2ND)

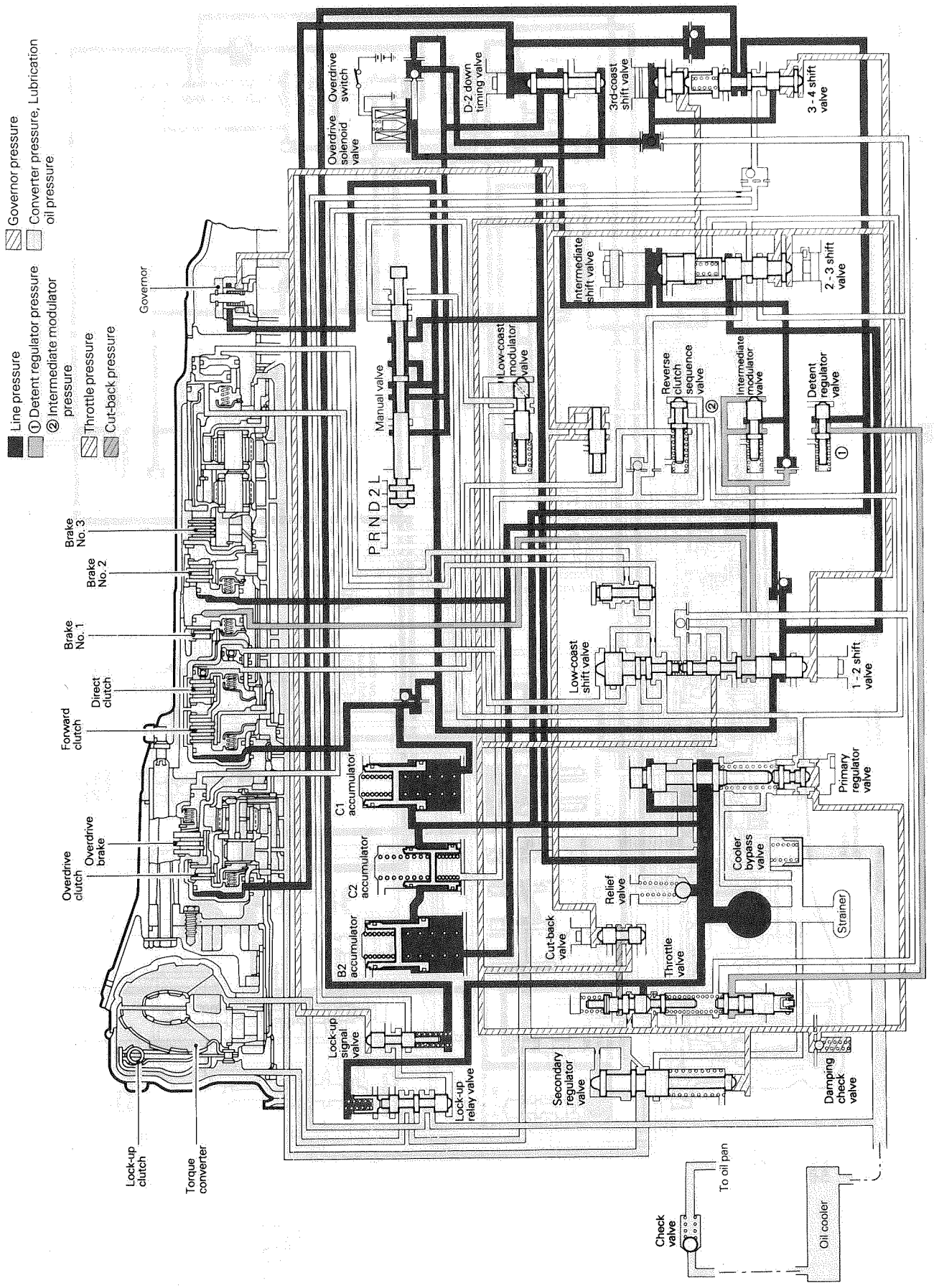

L (LOCK UP)

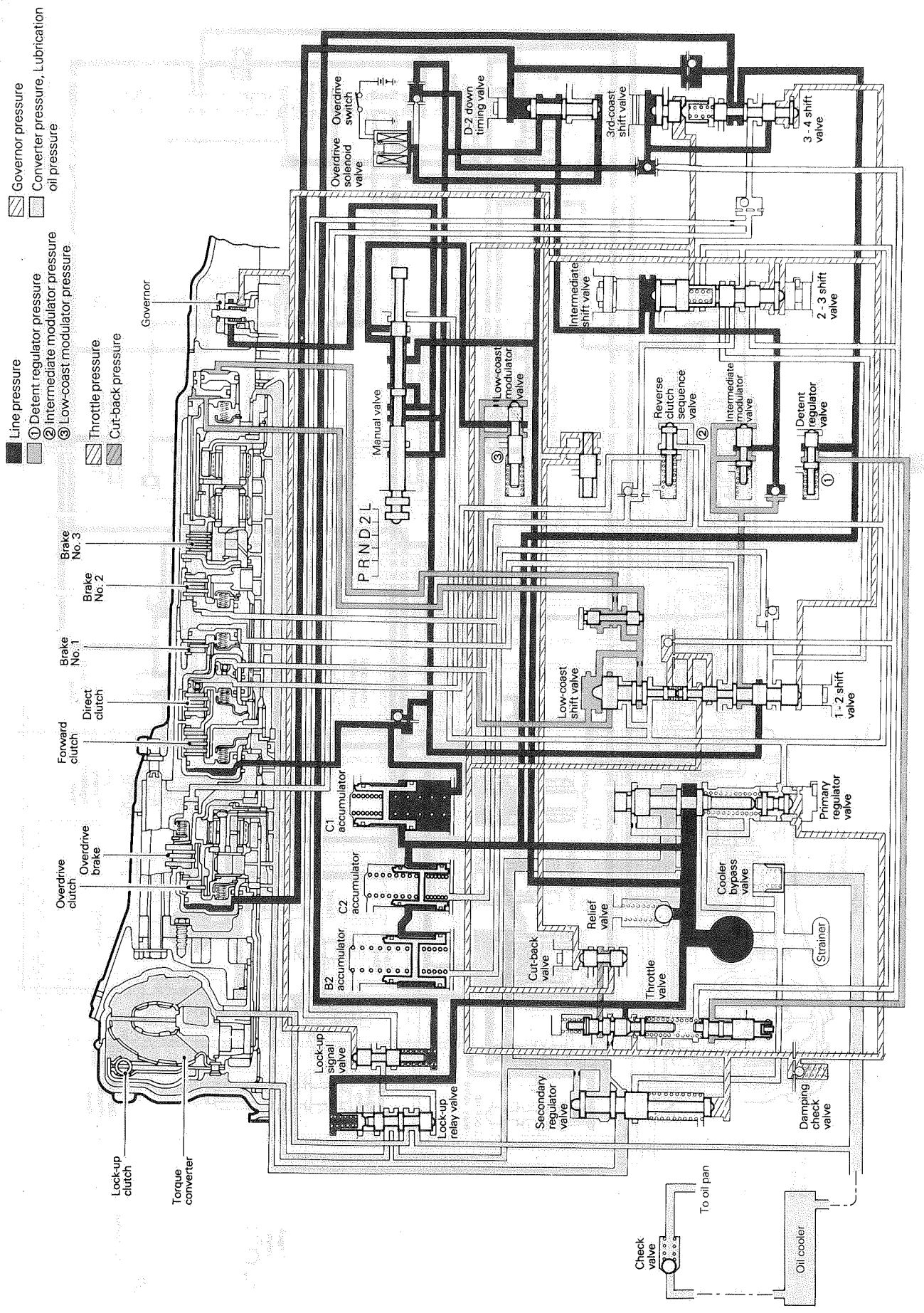

TRA0213

R (REVERSE)

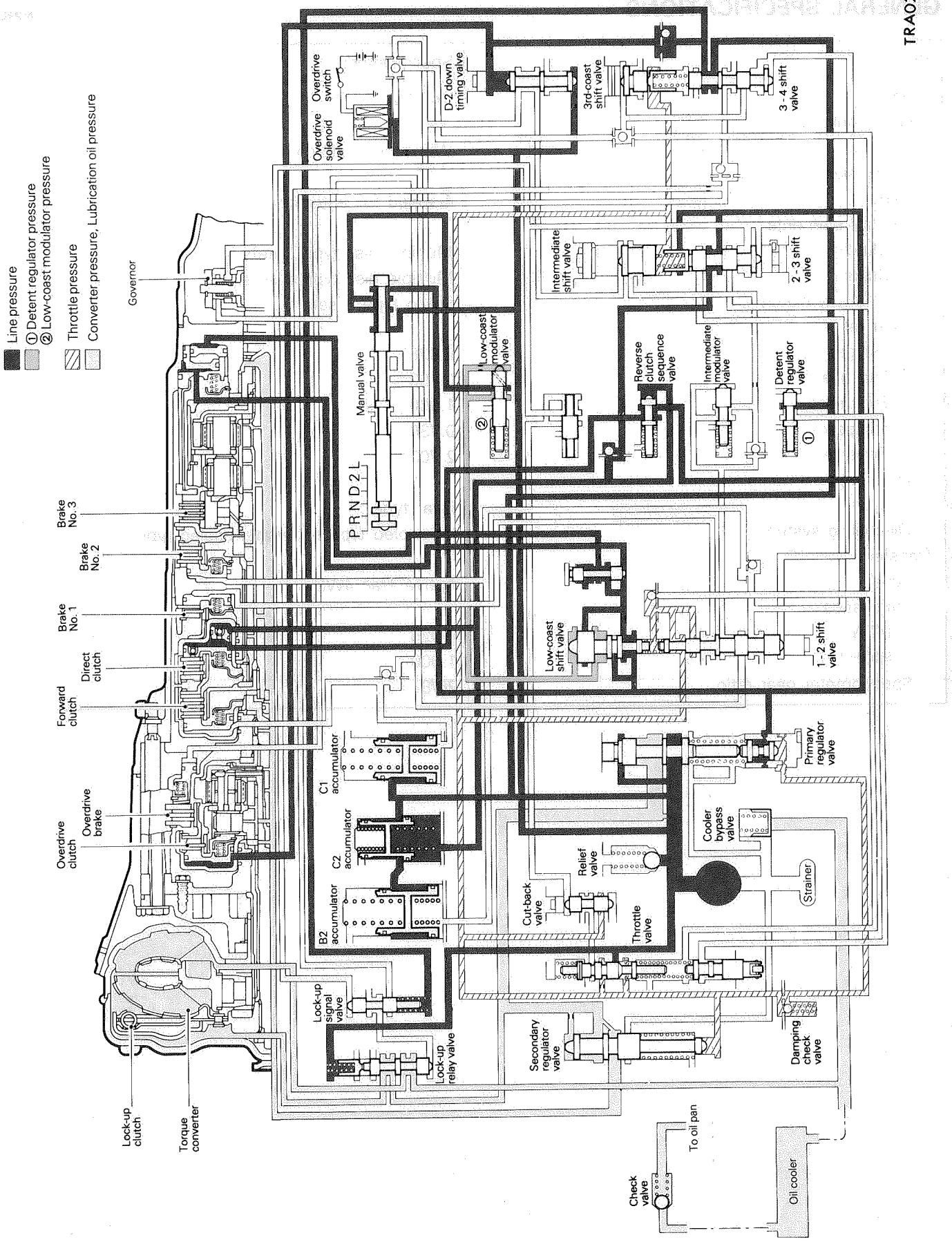
Line pressure
① Detent regulator pressure
② Low-coast modulator pressure
Throttle pressure
Converter pressure, Lubrication oil pressure
TRA0214
Governor
Overdrive solenoid valve
Overdrive switch
D-2 down timing valve
3rd-coast shift valve
3 - 4 shift valve
Intermediate shift valve
2 - 3 shift valve
Low-coast modulator valve
Manual valve
P R N D 2 L
Reverse clutch sequence valve
Intermediate modulator valve
Detent regulator valve
Brake No. 3
Brake No. 2
Brake No. 1
Direct clutch
Forward clutch
Low-coast shift valve
1 - 2 shift valve
Primary regulator valve
C1 accumulator
Overdrive brake
Overdrive clutch
C2 accumulator
Cooler bypass valve
Relief valve
Strainer
Cut-back valve
Throttle valve
B2 accumulator
Lock-up signal valve
Lock-up relay valve
Secondary regulator valve
Damping check valve
Lock-up clutch
Torque converter
To oil pan
Check valve
Oil cooler

SPECIFICATIONS

GENERAL SPECIFICATIONS

M23CA--

Items	Specifications
Model	V4AW2
Torque converter	
Type	With lock-up clutch
Transmission	
Type	4-speed full automatic
Control elements	
Clutch	Multiple disc type 3 sets
Brake	Multiple disc type 4 sets
One-way clutch	Sprag type 3 sets
Gear ratios	
1st gear	2.826
2nd gear	1.493
3rd gear	1.000
4th gear	0.730
Reverse	2.703
Oil pump	
Type	Gear type
Oil-cooling system	Air-cooled type and water-cooled type
Transfer	
Type	Active Trac 4WD
Shift ratios	
LOW	1.925
HIGH	1.000
Speedometer gear ratio	26/8

Transmission number marking position and designation

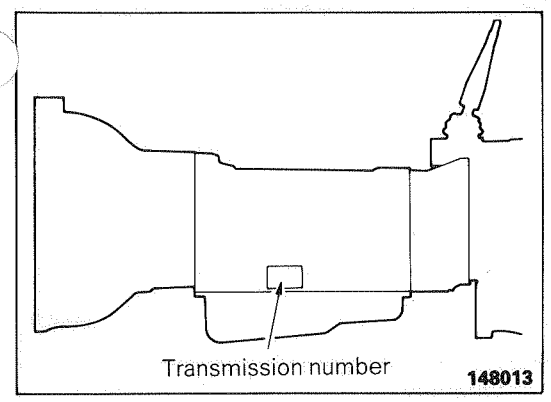

91 D N 6 □□□□

- Serial number per month
- Fixed number (Mitsubishi exclusive head number)
- Classification of type
  - P: V4AW2
- Manufacturing month
  - A: January
  - D: April
  - M: December
- Manufacturing year
  - 91: 1991

SERVICE SPECIFICATIONS

M23CB--

Items	Standard	Limit
Stall speed (rpm)	2100–2400	
Governor pressure kPa (psi)		
1000 rpm	140–170 (19.9–24.2)	—
2000 rpm	250–290 (35.6–41.2)	—
3000 rpm	410–470 (58.3–66.8)	—
Line Pressure kPa (psi)		
"D" range		
When idling	520–600 (74–85)	—
During stall	1100–1300 (156–185)	—
"R" range		
When idling	790–910 (112–129)	—
During stall	1600–2000 (228–284)	—

Items	Standard	Limit
Transmission control Clearance between sleeve and end of selector lever mm (in.)	18.2 — 18.9 (.717 — .744)	—
Transmission and Transfer assembly Distance between inner cable stopper and edge of dust cover mm (in.)	0—1 (0—.04)	—

LUBRICANTS

M23CD--

Items	Specified lubricants	Quantity
Automatic transmission fluid	Dia ATF SP or MITSUBISHI PLUS ATF or equivalent	Approx. 7.2 dm^3 (7.6 qts.)
Transfer oil	Hypoid gear oil SAE 75W–85W conforming to API classification GL-4 or higher	Approx. 2.3 dm^3 (2.4 qts.)
Transfer control lever assembly O-ring	Hypoid gear oil SAE 75W–85W conforming to API classification GL-4 or higher	Small quantity
Transfer oil seal lip	Hypoid gear oil SAE 75W–90 or 75W–85W conforming API GL-4 or higher	As required
Oil filler pipe O-ring	Dia ATF SP or MITSUBISHI PLUS ATF or equivalent	As required

SEALANTS AND ADHESIVES

M23CE--

Items	Specified sealants and adhesives
Transmission control	
Transfer control lever assembly gasket	3M ATD Part No. 8663 or equivalent
Stopper plate gasket	3M ATD Part No. 8663 or equivalent
Transfer control lever assembly mounting bolt	3M STUD Locking No. 4170 or equivalent
Transmission and Transfer assembly	
Control housing gasket	3M ATD Part No. 8663 or equivalent
Control housing mounting bolt	3M STUD Locking No. 4170 or equivalent

SPECIAL TOOLS

M23DA--

Tool	Number	Name	Use
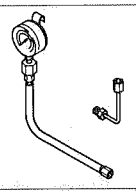	MD998330 (includes MD998331)	Oil pressure gauge 3,000 kPa (427 psi)	Measurement of oil pressure
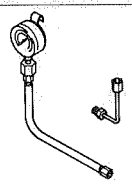	MD999563 (includes MD998331)	Oil pressure gauge 1,000 kPa (142 psi)	
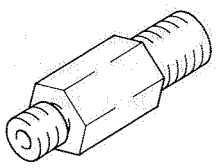	MD998920	Adapter	
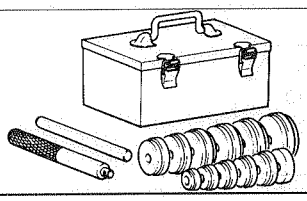	MB990925	Bearing and oil seal installer set	Installation of oil seal MB990938, MB990928 (Refer to GROUP 22–Special Tools.)

TROUBLESHOOTING

M23EBAZ

GENERAL

Automatic transmission malfunctions may be caused by the following conditions:
(1) Improper maintenance and adjustment
(2) Mechanical malfunctions
(3) Hydraulic malfunctions
(4) Poor engine performance

Troubleshooting in the event of any such malfunctions should begin by checking fluid level, ATF condition, manual linkage adjustment, throttle control cable adjustment and other conditions whose deviation from standards can be readily known. Then, road test shall be performed to determine whether or not the problem has been corrected or more diagnosis is necessary. If the problem still persists after these tests and corrections, hydraulic tests should be performed for further troubleshooting.

ROAD TEST

Prior to performing road test, be sure to make basic checks including check and adjustment of fluid level and condition and adjustment of the throttle cable. For road test, the transfer must be placed in the 2H (2WD-high) position. In road test, various changes such as slips in transmission and shifting conditions are checked and hence the transmission operation at each shift position must have been checked.

D RANGE TEST

Start with throttle valve opened (50% and full), and check upshift from 1-speed → 2-speed, 2-speed → 3-speed and 3-speed → 4-speed. Check that speed change points match shift pattern. (Refer to P.23–23.)

Will not upshift, 1-speed → 2-speed	Will not upshift, 2-speed → 3-speed	Will not upshift, 3-speed → 4-speed (with throttle valve opening under 85%)	• Speed change points incorrect
• Governor malfunction • 1–2 shift valve malfunction	• 2–3 shift valve malfunction • Governor malfunction	• 3–4 shift valve malfunction • Governor malfunction • OD OFF switch or OD solenoid malfunction	• Line pressure malfunction • Governor malfunction • Incorrect throttle cable adjustment

Kickdown traveling at 2-speed, 3-speed and 4-speed. Check that possible kickdown vehicle speed limit at 2-speed → 1-speed, 3-speed → 1-speed, 3-speed → 2-speed, or 4-speed → 1-speed, 4-speed → 3-speed conforms with the shift pattern. (Refer to P.23–23.)

Speed change point incorrect	Will not downshift
• Line pressure malfunction • Governor malfunction • Detent regulator valve malfunction	• All shift valves malfunction • Governor malfunction • OD OFF switch or OD solenoid malfunction

When traveling in 3-speed or 4-speed, release accelerator and shift to L. Check that 3-speed → 2-speed or 4-speed → 3-speed takes place immediately and 2-speed → 1-speed dowsnshift conforms with shift pattern. (Refer to P.23–23.)

Speed change point incorrect	Will not downshift, 2-speed → 1-speed
• Incorrect throttle cable adjustment • Governor malfunction • Line pressure malfunction • Low coast modulator valve malfunction	• 1–2 shift valve malfunction • Governor malfunction

When traveling in 3-speed or 4-speed, shift to 2 and L and check engine brake function in each range.

Engine brake will not function in 2.	Engine brake will not function in L.
Brake No. 1 malfunction	Brake No. 3 malfunction

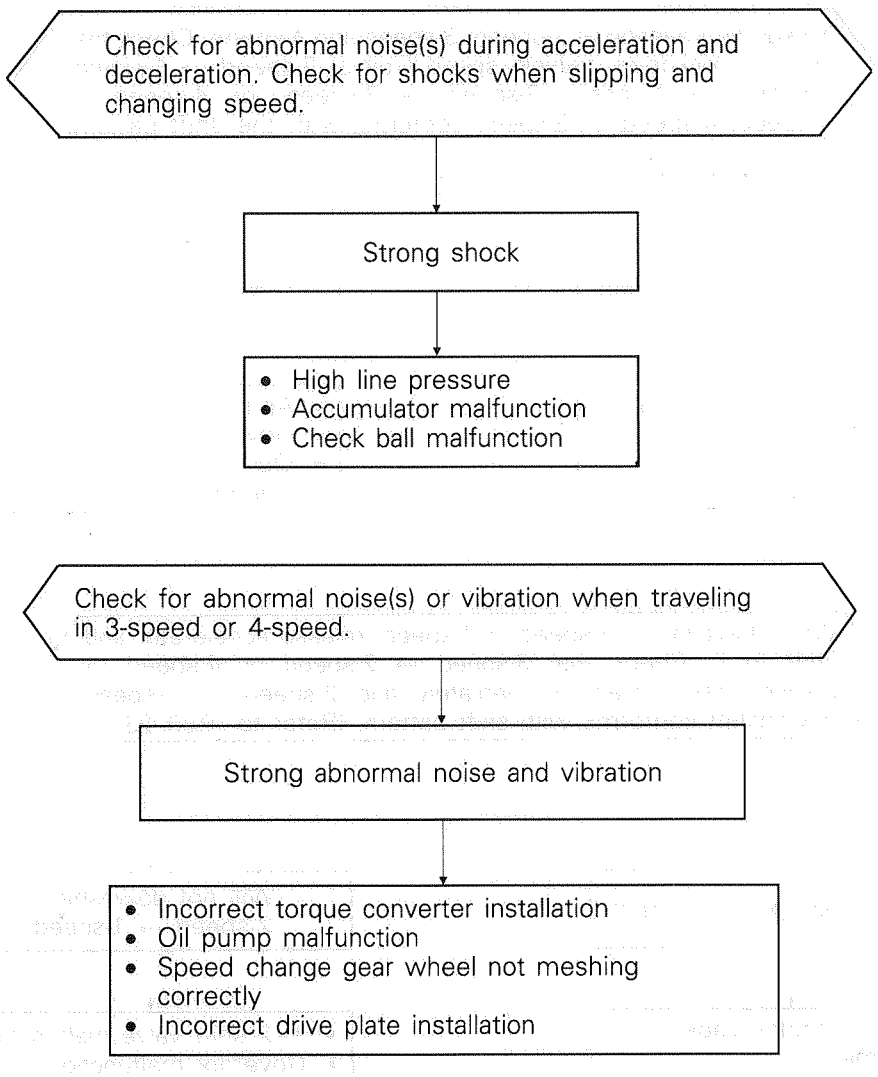

NOTE
Abnormal noises and vibrations are often caused by an unbalanced propeller shaft, differential, tire, torque converter, engine etc. Extremely thorough inspection is therefore required.

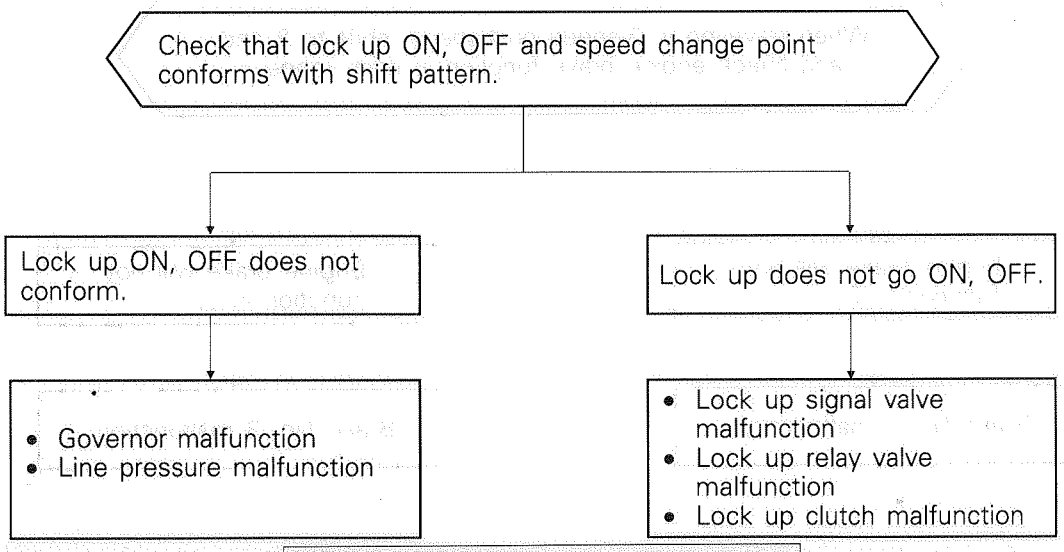

NOTE
(1) Determine the moment when lock up turns ON by decreased engine rpm or by a slight shock back and forth.
(2) Determine the moment when lock up turns OFF by increased engine rpm.
(3) Check lock up condition by pumping the accelerator slightly. If engine rpm rises in accordance with throttle valve opening size, determine that the lock up is OFF, if not, determine it ON.
When lock up is OFF, drive power is transferred through the fluid in the torque converter and therefore, when the accelerator pedal is depressed, slipping occurs inside the torque converter with a resulting large increase in engine rpm.

2 RANGE TEST

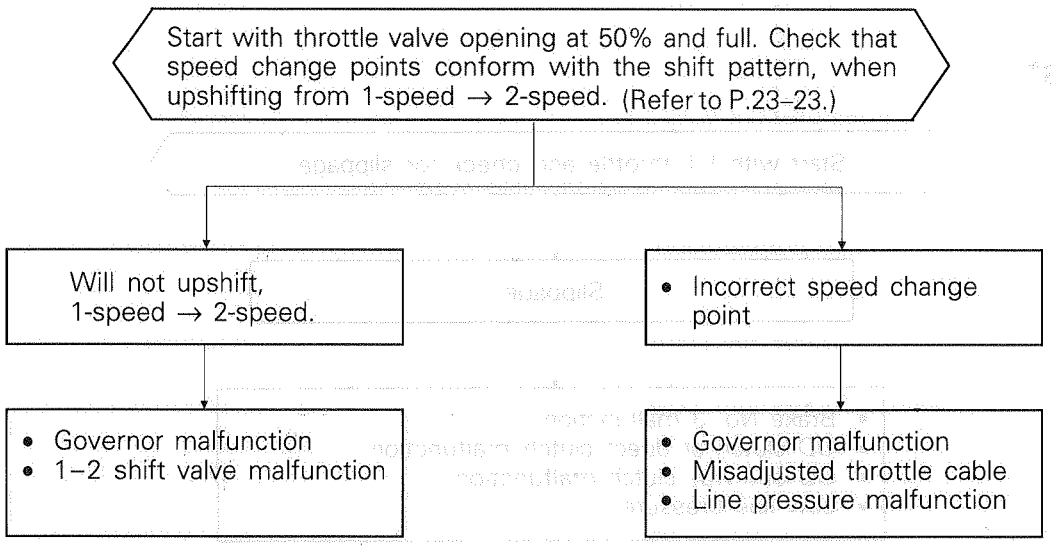

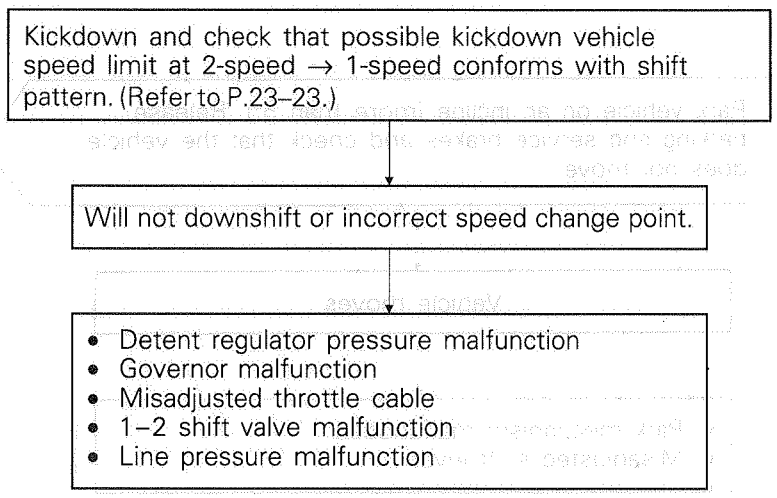

L RANGE TEST

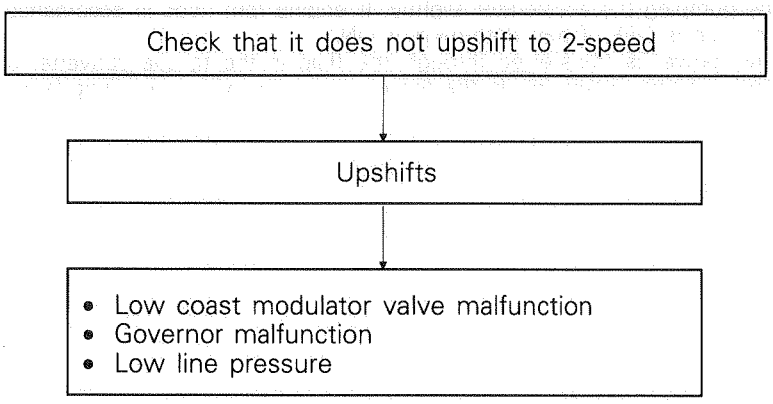

R RANGE TEST

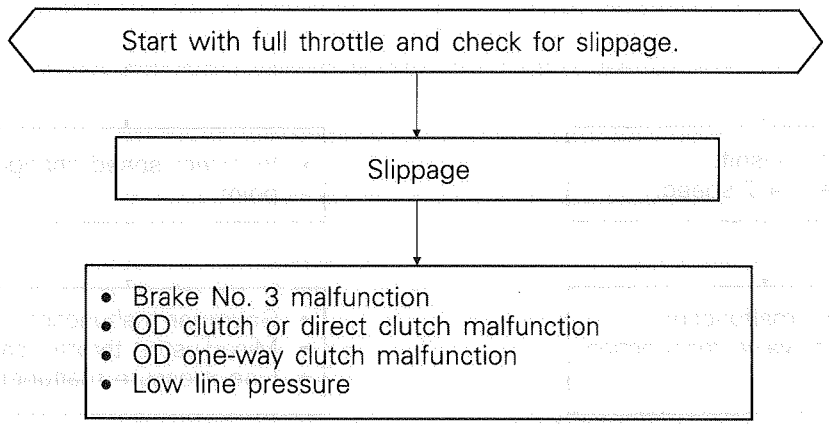

P RANGE TEST

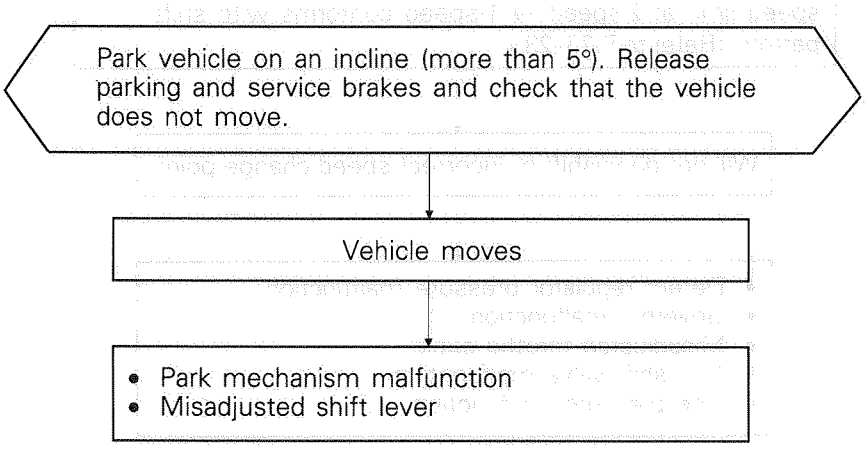

SHIFT PATTERN

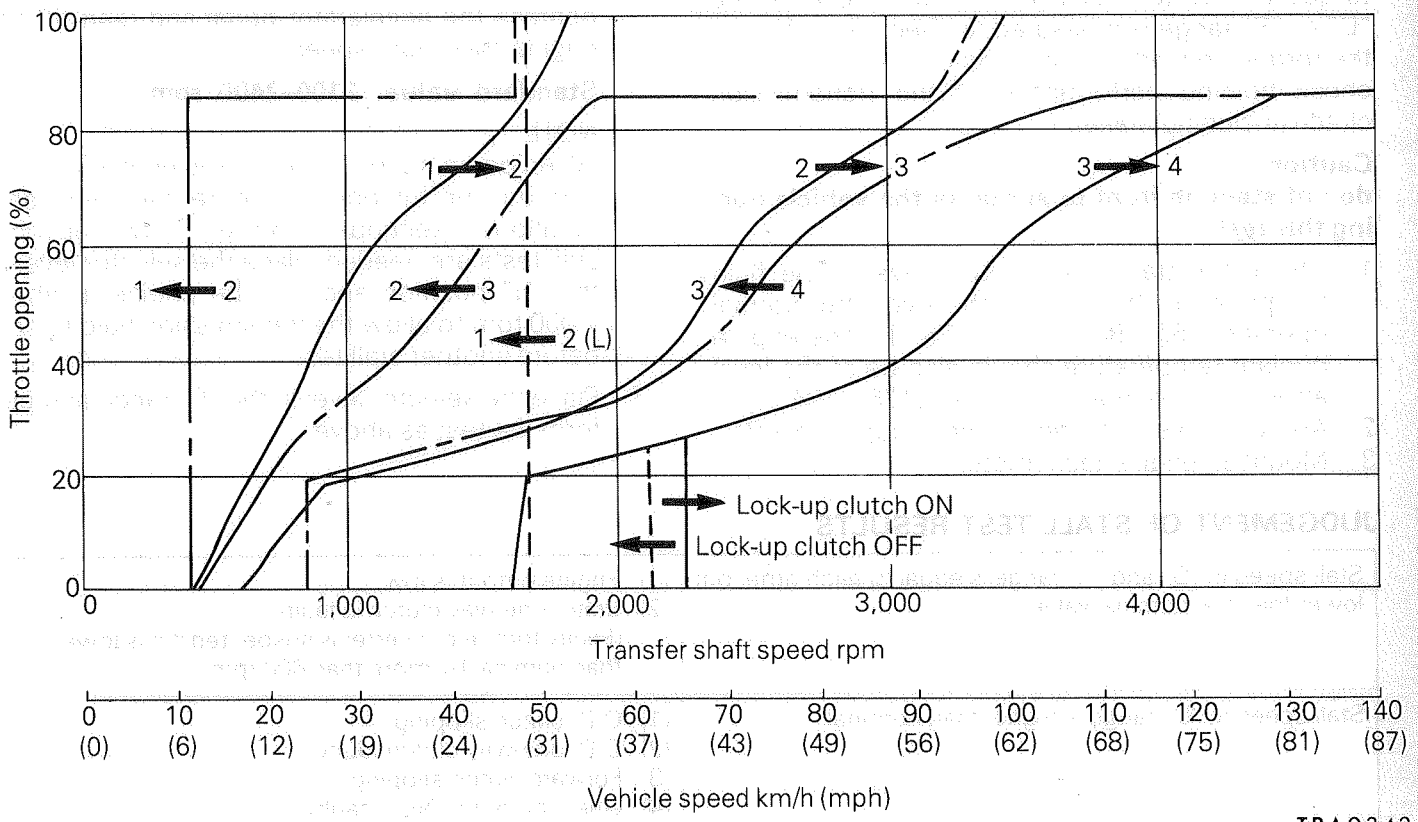

TRA0342

CONVERTER STALL TEST

In this test, the engine maximum speed when the torque con verter stalls with the shift lever in the "D" or "R" range is measured to check operation of the torque converter, stator and oneway clutch and check holding performance of the transmission clutch (including brake).

Caution
do not stand in front or at rear of the vehicle during this test.

1. Check the transmission fluid level. The fluid temperature should be at the level after normal operation [50 – 80°C (122 – 176°F)]. The engine coolant temperature should also be at the level after normal operation [80 – 90° (176 – 194°F)].
2. Apply chocks to the rear wheels (right and left).
3. Mount an engine tachometer.
4. Apply fully the parking and service brakes.
5. Start the engine.
6. With the selector lever in the "D" range, fully depress the accelerator pedal and read off the engine maximum speed.

   Standard value: 2100–2400 rpm

   NOTE
   When doing so, do not keep the engine running with throttle full open for more than necessary duration (5 seconds or more). If two or more stall tests are needed, place the selector lever in the "N" position and run the engine at about 1,000 rpm to allow the transmission fluid to cool before another stall test.
7. Place the selector lever in the "R" range and perform the test as above.

JUDGEMENT OF STALL TEST RESULTS

Stall speed in "D" and "R" range is equal to each other but lower than the nominal value.	(1) Engine output is low (2) Stator one-way clutch is faulty. (Faulty torque converter is suspected if it is lower than nominal by more than 600 rpm.)
Stall speed in "D" range is higher than nominal.	(1) O.D. clutch slipping. (2) O.D. one-way clutch faulty (3) Forward clutch slipping (4) One-way clutch No. 2 faulty (5) Low line pressure
Stall speed in "R" range is higher than nominal.	(1) O.D. clutch slipping. (2) O.D. one-way clutch faulty (3) Direct clutch slipping (4) Brake No. 3 slipping (5) Low line pressure

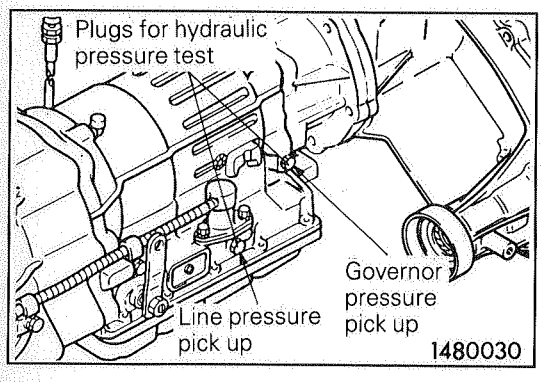

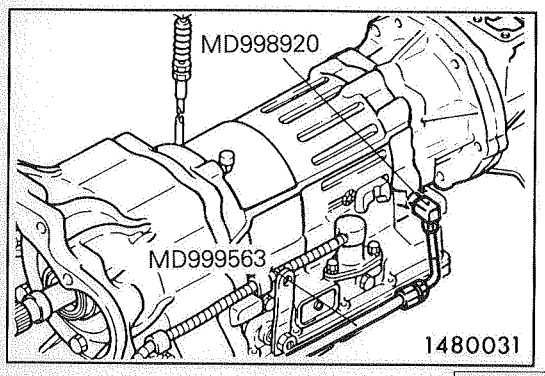

HYDRAULIC PRESSURE TEST

The hydraulic pressure tests (governor pressure and line pressure tests) are important in determining the causes of transmission failures.
Before conducting these tests, fluid level and condition and throttle cable adjustment etc. must be checked for defects or abnormalities. When conducting the tests, the engine and transmission should be at correct operating temperatures, [engine coolant water 80–90°C (176–194°F), transmission fluid 70–80°C (158–176°F)].

GOVERNOR PRESSURE TEST

1. Place vehicle on a chassis dynamometer.
2. Remove plug from governor pressure take off port.
3. Install special tool as shown in figure and place the meter inside vehicles.

   NOTE
   When the adapter interferes with the extension housing, repair the tool as shown in figure.
4. Apply parking brake.
5. Start engine.
6. Release parking brakes.

7. Shift to D and measure governor pressure at each output shaft rpm.

Standard value:

Output shaft speed (rpm)	Vehicle speed km/h (mph)	Governor pressure kPa (psi)
1,000	28 (17)	140–170 (19.9–24.2)
2,000	56 (35)	250–290 (35.6–41.2)
3,200	90 (56)	410–470 (58.3–66.8)

JUDGEMENT BY GOVERNOR PRESSURE

Governor pressure is not within the standard value	• Line pressure malfunction • Oil leak in governor circuit • Governor malfunction

LINE PRESSURE TEST

1. Place the vehicle on a chassis dynamometer.
2. Remove the plug from the line pressure take off port.
3. Install special tool as shown in the figure and place the meter inside vehicle.
4. Apply the parking brake.
5. Start the engine.
6. Place the selector lever in the "D" range.
7. Depress the brake pedal firmly by the left foot and operates the accelerator pedal by the right foot to measure the line pressure at each engine rpm. If the measured pressure is not nominal, check adjustment of the throttle cable and readjust if necessary before conducting the test again.
8. Place the selector lever in the "R" range and test as above.

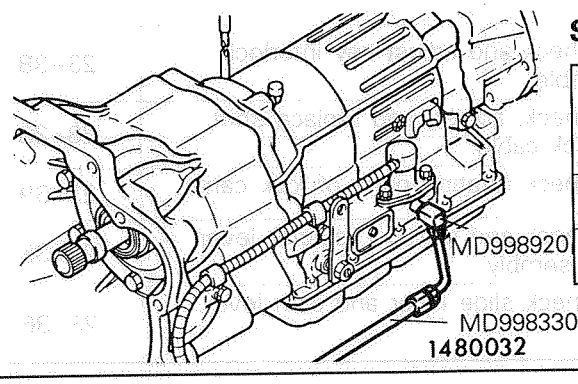

Standard value:

	Line pressure kPa (psi)	
	"D" range	"R" range
At idle	520–600 (74–85)	790–910 (112–129)
At stall	1100–1300 (156–185)	1600–2000 (228–284)

JODGEMENT BY LINE PRESSURE

Hydraulic pressure higher than nominal in all ranges	(1) Regulator valve faulty (2) Throttle valve faulty (3) Throttle control cable incorrectly adjusted
Hydraulic pressure lower than nominal in all ranges	(1) Oil pump faulty (2) Regulator valve faulty (3) Throttle valve faulty (4) Throttle control cable incorrectly adjusted (5) O.D. clutch faulty
Hydraulic pressure lower than nominal in "D" range	(1) Large fluid leaks in "D" range hydraulic circuit (2) Forward clutch faulty (3) O.D. clutch faulty
Hydraulic pressure lower than nominal in "R" range	(1) Large fluid leaks in "R" range hydraulic circuit (2) Brake No. 3 faulty (3) Direct clutch faulty (4) O.D. clutch faulty

A/T SAFETY-LOCK SYSTEM TROUBLESHOOTING

Symptom	Probable cause	Remedy	Ref. page
Selector lever can be selected into R from P without depressing brake pedal with ignition key in a position other than LOCK.	Damaged lock cam	Check and replace lock cam.	23–39
	Improperly adjusted shift lock cable, broken inner cable, loose or off connections	Check, adjust or replace the shift lock cable.	23–38
	Broken or sagging outer cable (shift lock cable) return spring	Check and replace shift lock cable.	23–36
Selector lever cannot be selected into R from P by depressing brake pedal with ignition key in position other than LOCK.	Defective selector lever assembly	Check and replace selector lever assembly.	23–35
	Sticking shift lock cable, key interlock cable, and transmission control cable	Check and replace shift lock cable, key interlock cable, and transmission control cable.	23–35
	Sticking lock cam, or foreign matter wedged in lock cam	Check and adjust lock cam.	23–39
	Improperly adjusted shift lock cable, elongated inner cable	Check, adjust, and replace shift lock cable.	23–38
	Sticking slide lever and cam lever inside key cylinder	Check and adjust slide lever and cam lever.	23–37
Selector lever can be selected into R from P when brake pedal is depressed even though the ignition key is in the LOCK position.	Damaged lock cam	Check and replace lock cam.	23–39
	Broken or disconnected key interlock cable	Check and replace key interlock cable.	23–36
	Damaged slide lever and cam lever inside key cylinder	Check and replace slide lever and cam lever.	23–36
Selector lever operation from P to R is not smooth.	Improperly adjusted key interlock cable	Check and adjust key interlock cable.	23–38
	Improperly adjusted shift lock cable, elongated inner cable	Check, adjust, and replace shift lock cable.	23–38
	Binding lock cams (in rotation)	Check rotating parts of lock cams.	23–39
	Defective selector lever assembly	Check and replace selector lever assembly.	23–35
	Binding slide lever inside key cylinder	Check slide lever and cam lever.	23–36

Symptom	Probable cause	Remedy	Ref. page
Selector lever cannot be shifted from R to P.	Defective selector lever assembly	Check and replace selector lever assembly.	23–35
	Improperly adjusted transmission control cable	Adjust transmission control cable.	23–38
Ignition key cannot be turned to LOCK position with selector lever in P.	Foreign matter wedged in lock cam	Check and replace lock cam.	23–39
	Improperly adjusted key interlock cable, sticking inner cable	Check, adjust, and replace key interlock cable.	23–38
	Binding slide lever inside key cylinder	Check slide lever.	23–36
Ignition key can be turned to LOCK position even with selector lever in position other than P.	Damaged lock cam	Check and replace lock cam.	23–39
	Loose key cylinder cover	Check and retighten cover.	23–36
	Broken key interlock cable, loose connections, elongated inner cable	Check and replace key interlock cable.	23–36
	Damaged cam lever inside key cylinder	Check and replace cam lever.	23–36

SERVICE ADJUSTMENT PROCEDURES

AUTOMATIC TRANSMISSION FLUID INSPECTION

M23FBBK

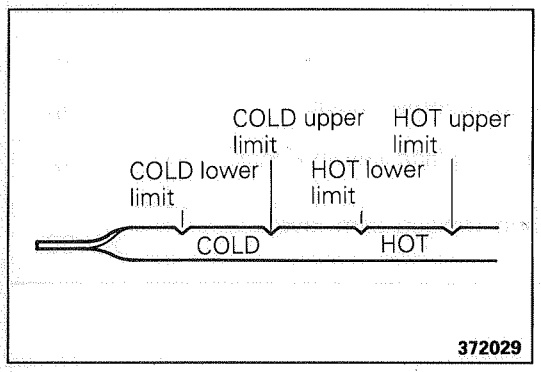

(1) Place the vehicle on a level surface.
(2) Before removing the dipstick, wipe all dirt form area around the dipstick.
(3) With the selector lever in the "P" position and the parking brake applied, start the engine.
(4) The engine should be running at idle and the transmission should be warmed up sufficiently. [fluid temperature 70–80°C (158–176° F)]
(5) Move the selector lever through all positions to fill the torque converter and hydraulic circuit with fluid. Then place the lever in the "N" position.
(6) Check that fluid level is at oil level gauge "HOT". If fluid level is low, add fluid to "HOT" level.

Transmission fluid: Dia ATF SP or MITSUBISHI PLUS ATF or equivalent

NOTE
Low fluid level can allow the oil pump to take in air together with fluid, leading to various troubles. Air trapped in hydraulic circuit forms bubbles which make the fluid spongy. This lowers pressure and slows down pressure buildup. If the transmission has too much fluid, gears churn up foam and cause same conditions as when the fluid level is low, resulting in premature deterioration of ATF. In either case, air bubbles can cause overheating and fluid oxidation and varnishing, which can interfere with normal valve, clutch and servo operation. Foaming can also result in fluid escaping from the transmission vent where it may be mistaken for a fluid leak.

(7) Check fluid condition.

NOTE
When fluid smells burned, it is contaminated with metal bushing or friction material particles and hence a complete overhaul of the transmission is needed. Be sure to examine fluid on the dipstick closely.

(8) After fluid has been checked, insert the dipstick until it is seated fully to seal out water and dirt.

AUTOMATIC TRANSMISSION FLUID CHANGE

Caution
If ATF change is required due to damage to the transmission, be sure to clean the cooler system.

(1) Raise the vehicle on hoist. Place a drain container with large opening under the drain plug (located in bottom of the oil pan).
(2) Remove the drain plug to let ATF drain.
(3) Install the drain plug and new gasket and tighten to 18–23 Nm (13–17 ft.lbs.).
(4) Refill ATF through the oil level gauge hole until its level reached the COLD lower limit of the level gauge.
(5) Start the engine and allow to idle for at least two minutes. Then, with the parking brake and service brake applied, move the selector lever through all positions and finally place in the "N" or "P" position.
(6) After the transmission is warmed up to the normal operating temperature, recheck the fluid level, which must be between the HOT upper limit and HOT lower limit marks.
(7) Insert the dipstick fully to prevent dirt from entering the transmission.

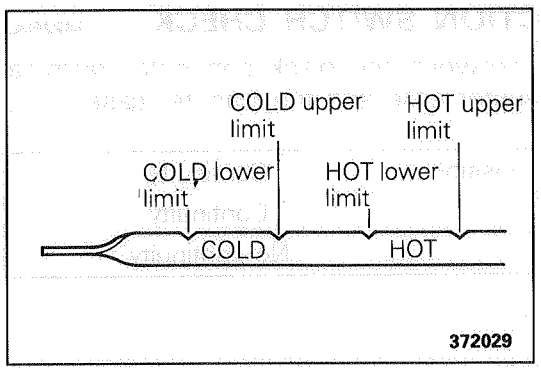

TRANSFER OIL INSPECTION AND CHANGE B23FGAF

Refer to GROUP 22–Service Adjustment Procedures.

THROTTLE CABLE CHECK AND ADJUSTMENT M23FHAA

(1) Check for defective or bent throttle lever or throttle cable bracket.
(2) With the accelerator depressed, check to be sure that the distance between the inner cable stopper and dust cover surface is within the standard value.

Standard value: 0–1 mm (0–.4 in.)

(3) If outside the standard value, adjust with adjusting nut.

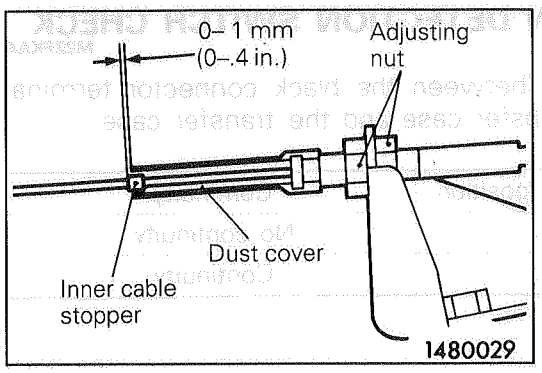

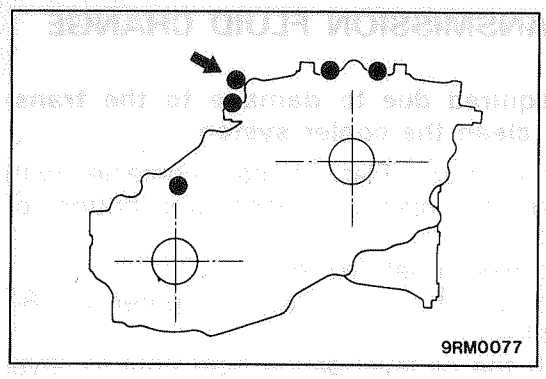

CENTER DIFFERENTIAL LOCK DETECTION SWITCH CHECK

M22FHAA

Check the continuity between the brown connector termina on the side of the transfer case and the transfer case.

Transfer control lever position	Continuity
4H	No continuity
4HLc	Continuity

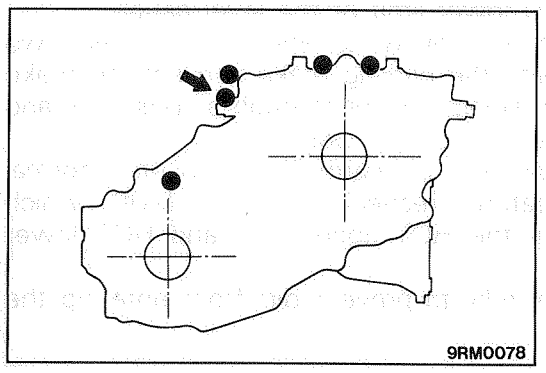

2WD/4WD DETECTION SWITCH CHECK

M22FIAA

Check the continuity between the black connector terminal on the side of the transfer case and the transfer case.

Transfer control lever position	Continuity
2H	Continuity
4H	No continuity

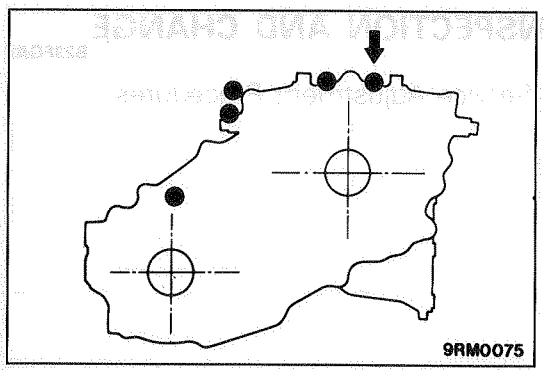

CENTER DIFFERENTIAL LOCK OPERATION DETECTION SWITCH CHECK

M22FJAA

Check the continuity between the brown connector terminal on the top of the transfer case and the transfer case.

Transfer control lever position	Continuity
4H	No continuity
4HLc	Continuity

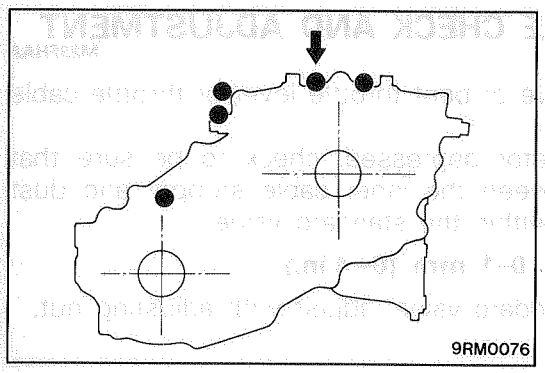

4WD OPERATION DETECTION SWITCH CHECK

M22FKAA

Check the continuity between the black connector terminal on the top of the transfer case and the transfer case.

Transfer control lever position	Continuity
2H	No continuity
4H	Continuity

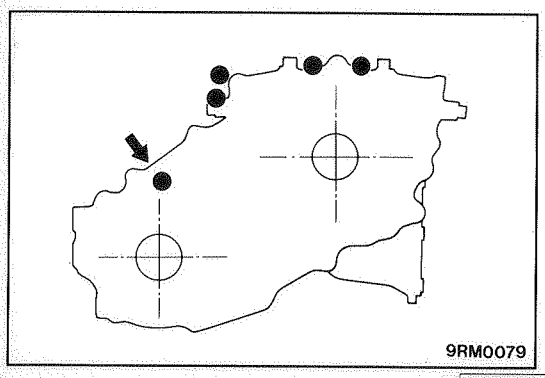

HI/LO DETECTION SWITCH CHECK

M22FLAA

Check the continuity between the white connector terminal on the side of the transfer case and the transfer case.

Transfer control lever position	Continuity
4HLc	Continuity
N (between 4HLc and 4LLc)	No continuity
4LLc	Continuity

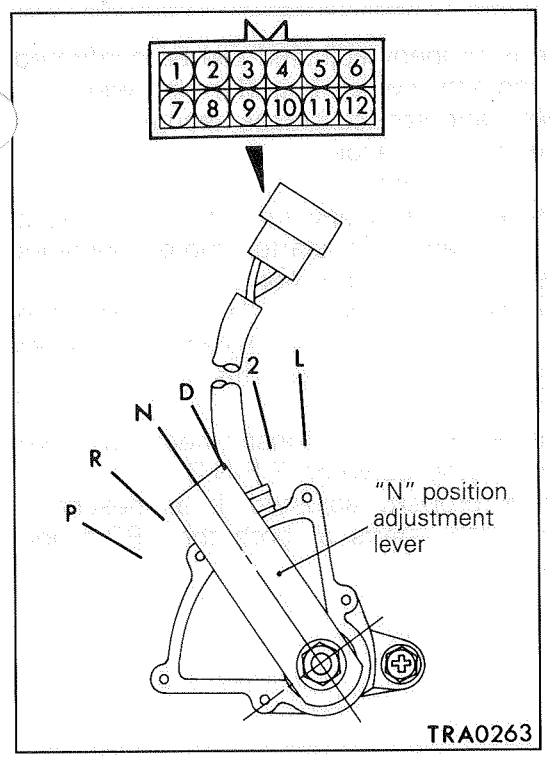

INHIBITOR SWITCH CHECK

M23FHAE

(1) Remove the inhibitor switch connector.
(2) Check that there is continuity for each position of the transmission control lever.

Terminal	Wire Color	P	R	N	D	2	L
1	RW					○	
2	RB						○
3	RG				○		
4	RY			○			
5	RL		○				
6	R	○					
7	BW	○		○			
9	L	○	○	○	○	○	○
12	BY	○		○			

NOTE
○—○ indicate that there is a continuity between the terminals.

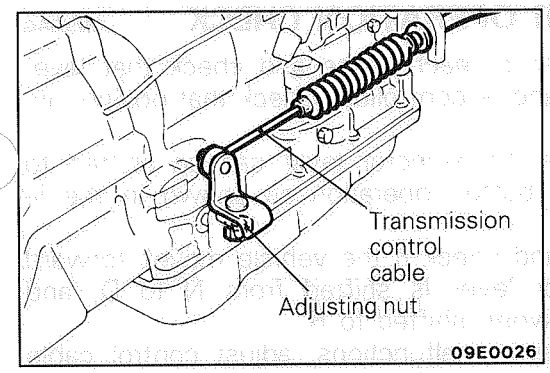

ADJUSTMENT OF INHIBITOR SWITCH AND CONTROL CABLE

M23FKAM

INHIBITOR SWITCH

(1) Move the selector lever to the "N" position.
(2) Loosen the adjusting nut of the control cable.

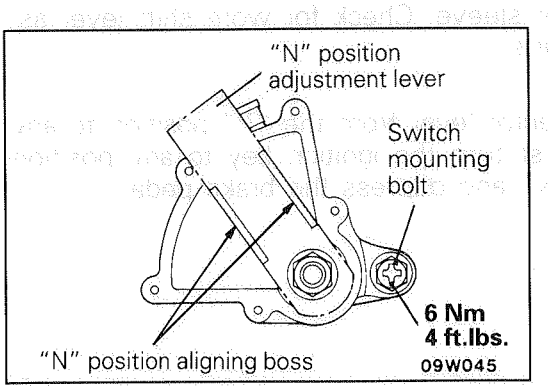

(3) Loosen the inhibitor switch mounting bolt.
(4) Adjust by turning the inhibitor switch so that the bosses for aligning the "N" position on the inhibitor switch are aligned with the "N" position adjustment lever.
(5) Tighten the inhibitor switch mounting bolt to the specified torque.

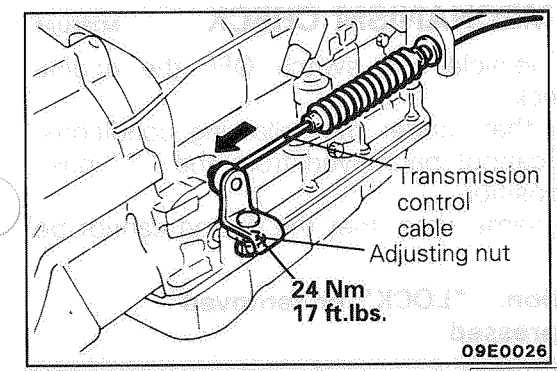

(6) Gently pull the end of the transmission control cable in the direction of the arrow and tighten the adjusting nut to the specified torque.
(7) Check that the selector lever is in the "N" position.
(8) Check that each range on the transmission side operates and functions correctly for each position of the selector lever.

CONTROL CABLE

Whether control cable is properly adjusted can be confirmed by checking whether inhibitor switch is performing well.

1. Apply parking brakes and service brakes securely.
2. Place selector lever to "R" range.
3. Set ignition key to "ST" position.
4. Slowly move the selector lever upward until it clicks as it fits in notch of "P" range. If starter motor operates when lever makes a click, "P" position is correct.
5. Then slowly move selector lever to "N" range by the same procedure as in foregoing paragraph. If starter motor operates when selector lever fits in "N", "N" position is correct.
6. Also check to be sure the vehicle doesn't begin to move and the lever doesn't stop between P-R-N-D.
7. The control cable is properly adjusted if, as described above, the starter motor starts at both the "P" range and the "N" range.

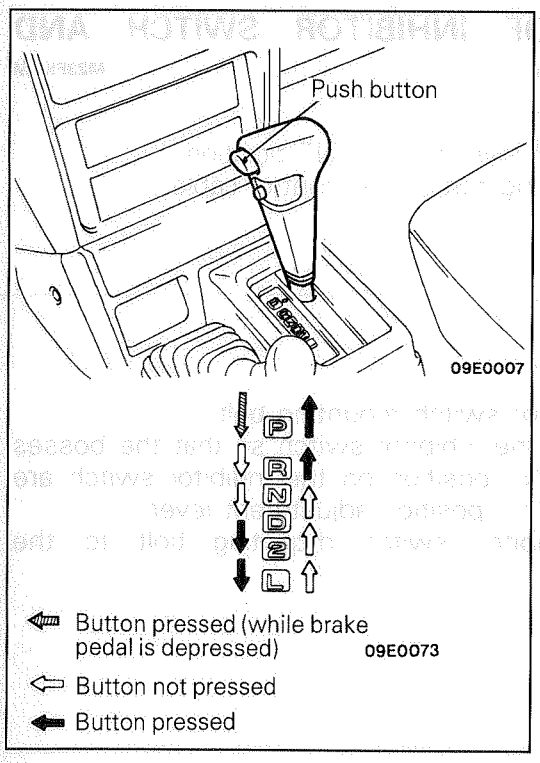

SELECTOR LEVER OPERATION CHECK M23FIAG

1. Shift selector lever to each range and check that lever moves smoothly and is controlled. Check that position indicator is correct.
2. Check to be sure the selector lever can be shifted to each position (by button operation as shown in the illustration).
3. Start the engine and check if the vehicle moves forward when the selector lever is shifted from N to D, and moves backward when shifted to R.
4. When the shift lever malfunctions, adjust control cable and selector lever sleeve. Check for worn shift lever assembly sliding parts.

NOTE
To move the selector lever from the "P" position to any other position, first turn the ignition key to any position other than "LOCK" and depress the brake pedal.

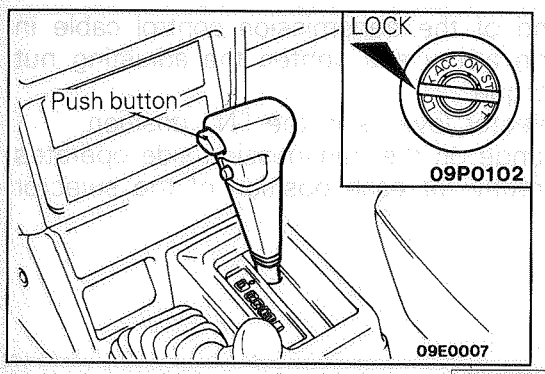

KEY INTERLOCK MECHANISM CHECK M23FUAE

Completely stop the vehicle and switch OFF the engine before making the check.

1. Check to be sure that, under the following conditions, the selector lever cannot be moved from the "P" position to any other position.
   Also check, at the same time, that the button cannot be pressed.

   Ignition key position: "LOCK" or removed
   Brake pedal: Depressed

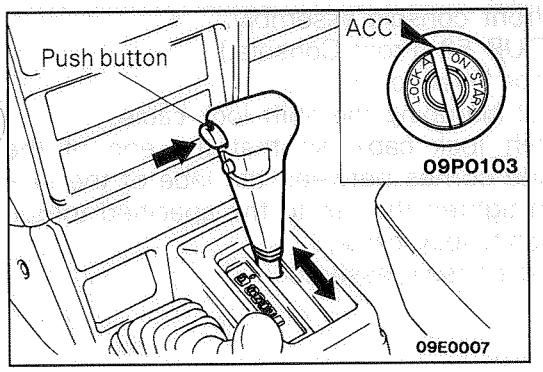

2. Check to be sure that, under the following conditions, the selector lever can be moved from the "P" position to any other position.
   Press the button a few times and check to be sure that the selector lever moves smoothly.
   Ignition key position: "ACC"
   Brake pedal: Depressed
   Button: Pressed

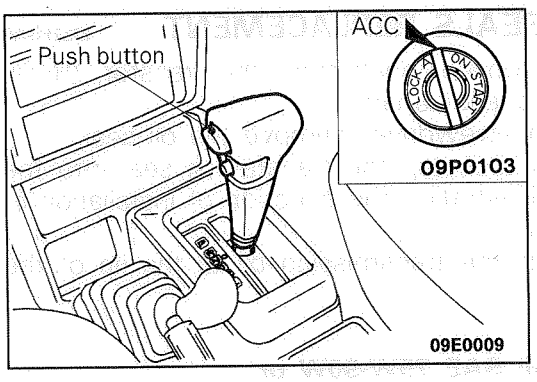

3. Check to be sure that, at all positions of the selector lever (other than "P"), the ignition key cannot be turned to the "LOCK" position.
   Check to be sure that the ignition key smoothly turns to the "LOCK" position when the selector lever is then set to the "P" position and the button is released.
4. If above are not checked okay, adjust key interlock cable mechanism as follows.
   (1) Remove front console assembly.
   (Refer to GROUP 52–Floor Console)
   (2) Place selector lever into "P" position.
   (3) Turn ignition key to the "LOCK" position.
   (4) Loosen the nut clamping the key interlock cable.
   (5) Gently push the lock cam until the pin stops in the direction of the arrow (◀), and then tighten the nut to the specified torque to clamp the key interlock cable.
   (6) Install the front console assembly.

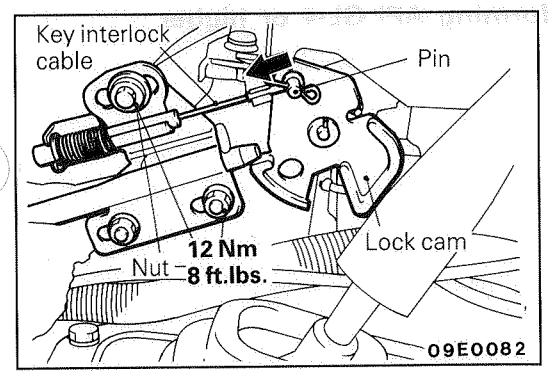

SHIFT LOCK MECHANISM CHECK M23FVAD

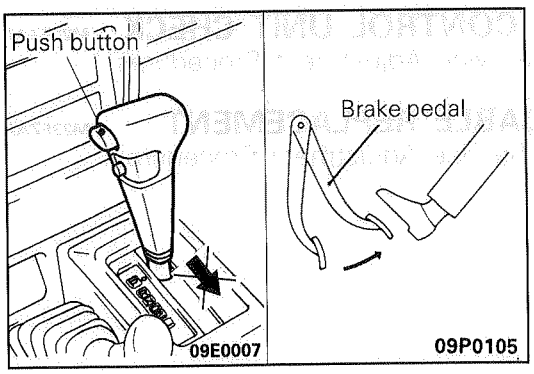

1. Check to be sure that, under the following conditions, the selector lever cannot be moved from the "P" position to any other position.
   Ignition key position: "ACC"
   Brake pedal: Not depressed
   Button: Pressed
2. Check to be sure that, under the following conditions, the selector lever can be moved smoothly from the "P" position to other position.
   Ignition key position: "ACC"
   Brake pedal: Depressed
   Button: Pressed

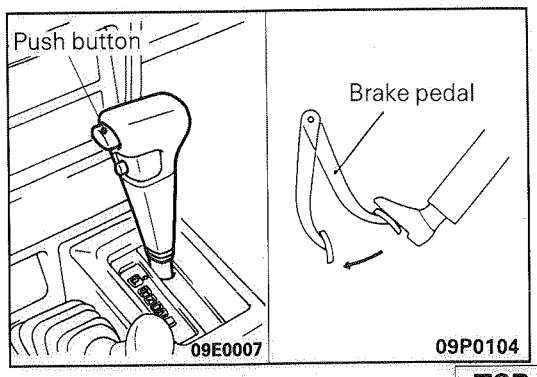

3. Check to be sure that, under the following conditions, the selector lever can be moved smoothly from the "R" position to the "P" position.
   Ignition key position: "ACC"
   Brake pedal: Released
   Button: Pressed
4. If the above operations are defective, adjust the shift lock cable mechanism by the following procedure.

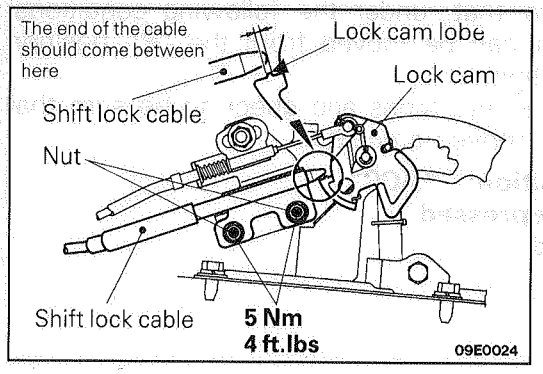

(1) Remove the front console assembly. (Refer to GROUP 52–Front Console.)
(2) Set the selector lever to "P".
(3) Loosen the nut clamping the shift lock cable.
(4) Adjust the shift lock cable so that the end of the cable (red mark) comes between the lobe of the lock cam, and then tighten the nut to the specified torque to clamp the shift lock cable.
(5) Install the front console assembly.

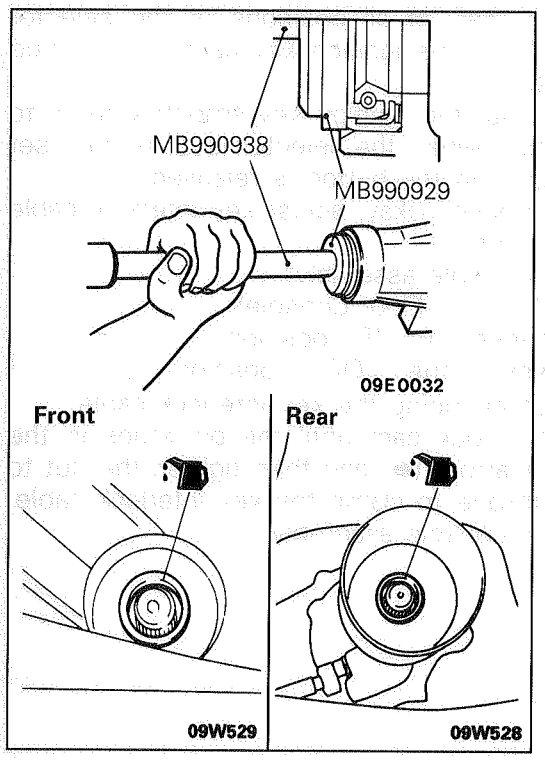

TRANSFER OIL SEALS REPLACEMENT M22FGAG

1. Disconnect the propeller shaft from the transfer. (Refer to GROUP 25–Propeller Shaft.)
2. Using a flat-tip (–) screwdriver, remove the oil seal.
3. Using the special tool, tap the transfer oil seal into the transfer. Note in illustration the direction of installation of transfer oil seal.
4. Apply a coating of the transmission oil to the lip of the oil seal.

Transmission oil:
Hypoid gear oil SAE 75W-90W or 75W-85W conforming API GL-4 or higher

4WD INDICATOR CONTROL UNIT CHECK M23FZAA

Refer to GROUP 22–Service Adjustment Procedures.

SPEEDOMETER CABLE REPLACEMENT M23FZAA

Refer to GROUP 22–Service Adjustment Procedures.

TRANSMISSION CONTROL

M23IA--

REMOVAL AND INSTALLATION

Pre-removal and Post-installation Operation
- Removal and Installation of Front Console Assembly (Refer to GROUP 52–Floor Console.)

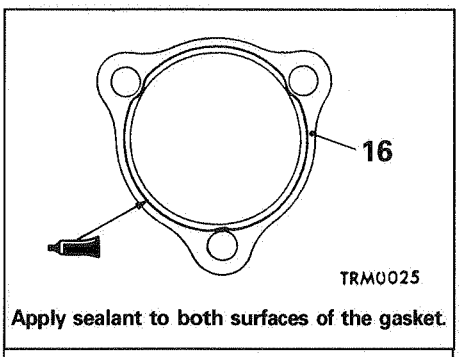

Apply sealant to both surfaces of the gasket.

Sealant: 3M ATD Part No. 8663 or equivalent

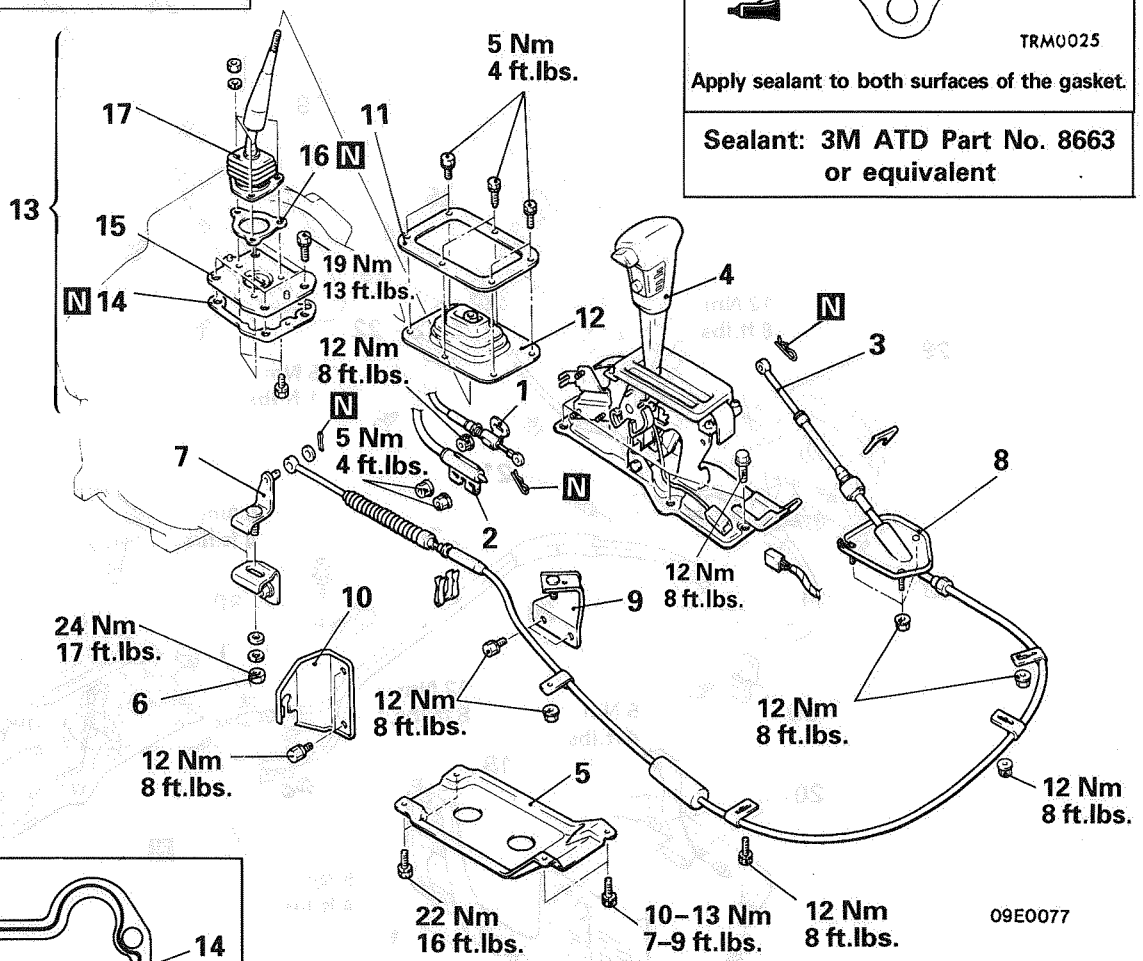

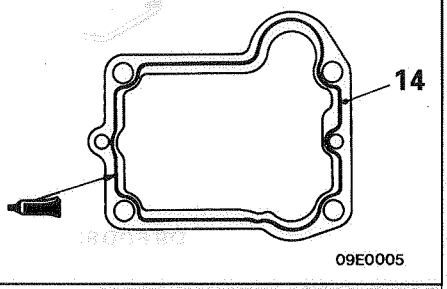

Sealant: 3M ATD Part No. 8663 or equivalent

Selector lever assembly removal steps
- ➡◀ 1. Connection for key-interlock cable (Selector lever assembly side)
- ➡◀ 2. Connection for shift-lock cable (Selector lever assembly side)
- ➡◀ 3. Connection for transmission control cable (Selector lever assembly side)
- 4. Selector lever assembly

Transmission control cable removal steps
- ➡◀ 3. Connection for the transmission control cable (selector lever assembly side)
- 5. Transfer case protector
- 6. Connection for the transmission control cable assembly (transmission side)
- 7. Transmission control upper lever
- 8. Transmission control cable
- 9. Cable bracket
- 10. Cable end bracket

Transfer control lever assembly removal steps
- 11. Retainer
- 12. Control lever boot
- ◀▶ ➡◀ 13. Transfer control lever assembly
- 14. Gasket
- 15. Stopper plate
- 16. Gasket
- 17. Transfer control lever

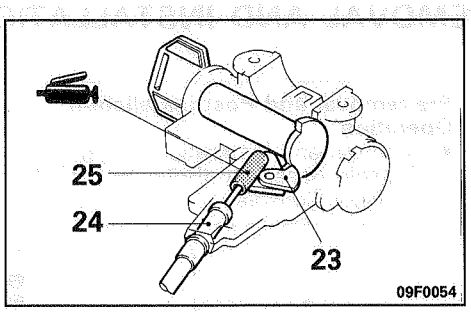

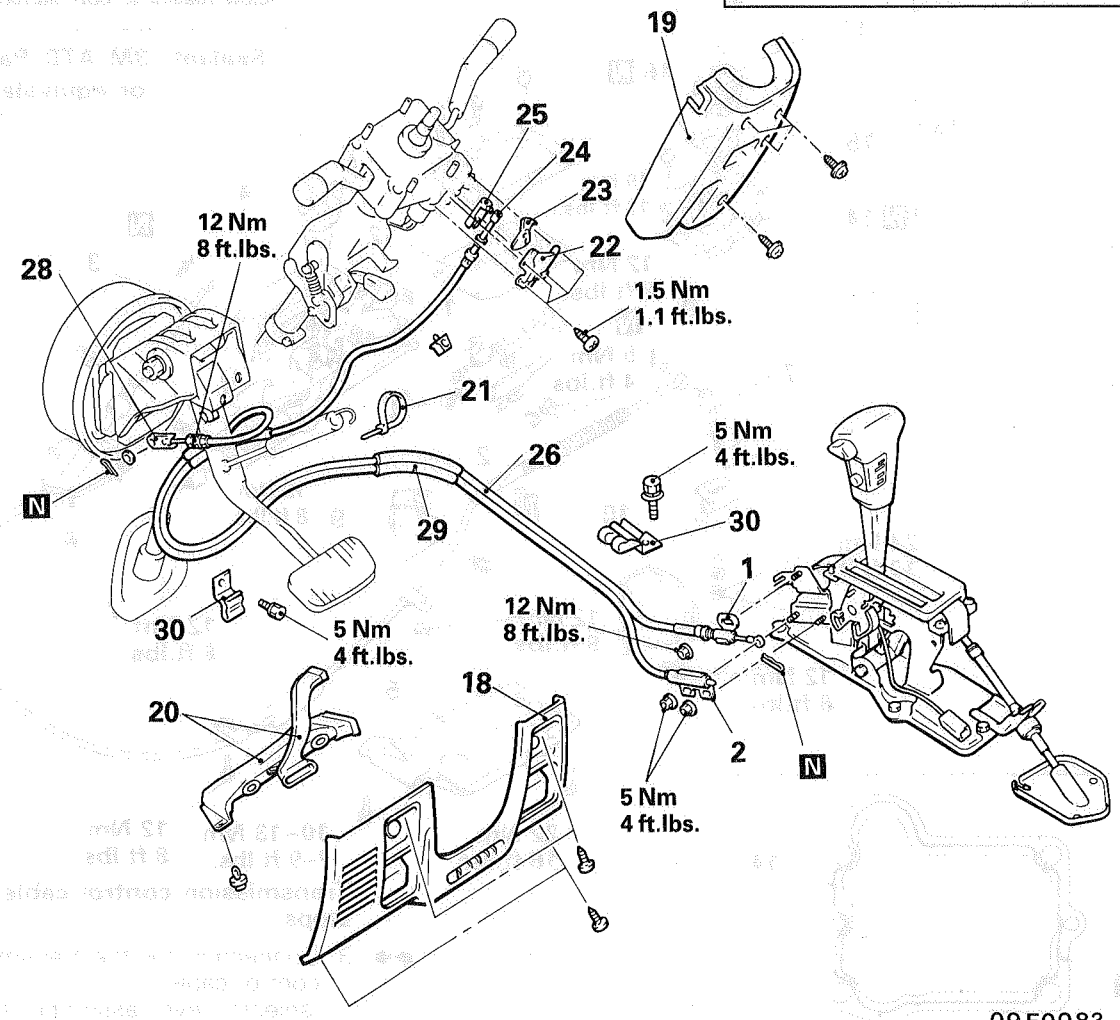

09E0083

Key-interlock cable removal steps

- ◆◆ 1. Connection for key-interlock cable (Selector lever assembly side)
- 18. Instrument panel under cover
- 19. Column cover lower
- 20. Foot shower duct (left side) and lap cooler duct A
- ◆◆ 21. Cable band
- • 22. Cover
- ◆◆ 23. Cam lever
- ◆◆ 24. Connection for key-interlock cable (Steering lock assembly side)
- ◆◆ 25. Slide lever
- 26. Key-interlock cable
- 27. Cable guide
- 30. Clamp

Shift-lock cable removal steps

- ◆◆ 2. Connection for shift-lock cable (Selector lever assembly side)
- 18. Instrument panel under cover
- 19. Column cover lower
- 20. Foot shower duct (left side) and lap cooler duct A
- ◆◆ 21. Cable band
- ◆◆ 28. Connection for shift-lock cable (Brake pedal side)
- 29. Shift-lock cable
- 30. Clamp

SERVICE POINTS OF REMOVAL M23IBAN

13. REMOVAL OF TRANSFER CONTROL LEVER ASSEMBLY

When removing the transfer control lever assembly, move the transfer control lever to the 2H (2 wheel drive-high range) position.

INSPECTION M23ICAN

- Check the transmission control cable assembly for function and for damage.
- Check the outer cable (key interlock cable, shift lock cable) for damage and spring for breakage and tension.
- Check the inner cable (key interlock cable, shift lock cable) for extension.

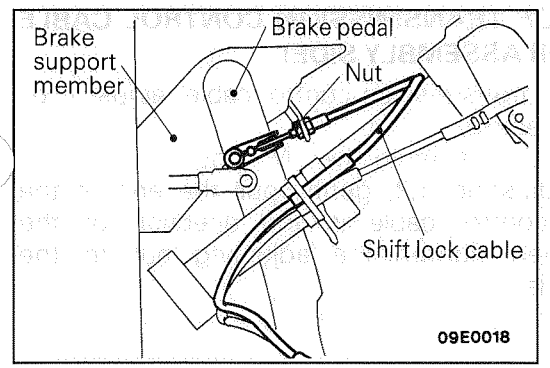

SERVICE POINTS OF INSTALLATION M23IDAT

28. CONNECTION OF SHIFT LOCK CABLE (BRAKE PEDAL SIDE)

(1) Install the shift lock cable to the brake pedal, and clamp the brake support member with the nut.
(2) Route the shift lock cable correctly.

Caution
Do not change the routing of the shift lock cable to the selector lever assembly.

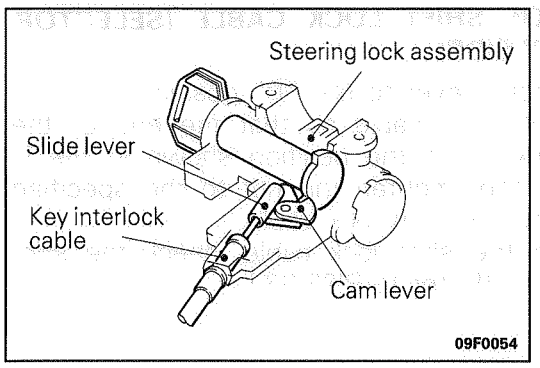

25. INSTALLATION OF SLIDE LEVER/24. KEY INTERLOCK CABLE (STEERING LOCK ASSEMBLY SIDE)/23. CAM LEVER

(1) Place the ignition key at the "LOCK" position or keep it removed.
(2) Install the slide lever, key interlock cable, and cam lever to the steering lock assembly as shown.

Caution
Do not change the routing of key interlock cable to the selector lever assembly.

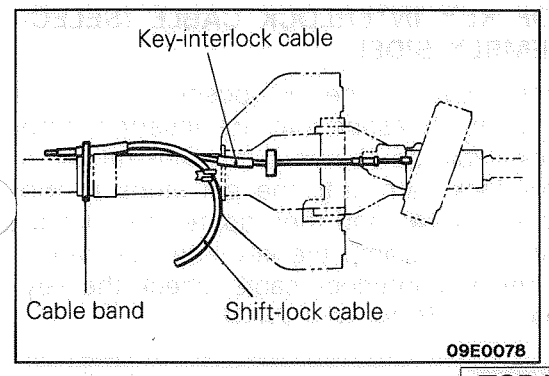

21. INSTALLATION OF CABLE BAND

Place the shift lock cable and key interlock cable as shown in the illustration, and clamp them with the cable band.

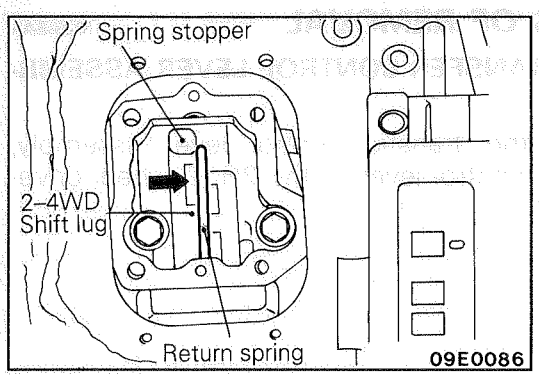

13. INSTALLATION OF TRANSFER CONTROL LEVER ASSEMBLY

(1) Remove the adhesive sticking to the transfer control lever assembly mounting bolts.
(2) Use a tap (M8 × 1.25) to remove the adhesive sticking to the screw mounting holes in the transfer control lever assembly.
(3) Check to be sure that the return spring is set to the spring stopper of the 2–4WD shift lug, and then install the control lever in the position shown by the arrow (⬅).
(4) Apply specified adhesive to the threads of the lever assembly mounting bolts, and then tighten the transfer control lever.

Specified adhesive: 3M STUD Locking No. 4710 or equivalent

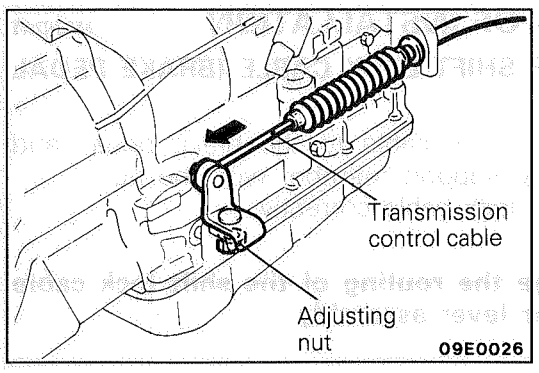

3. INSTALLATION OF TRANSMISSION CONTROL CABLE (SELECTOR LEVER ASSEMBLY SIDE)

After installing the transmission control cable, adjust it by the following procedure.
(1) Move the selector lever to the "N" position.
(2) Loosen the adjusting nut, gently pull the end of the transmission control cable in the direction of the arrow and then tighten the adjusting nut to the specified torque.

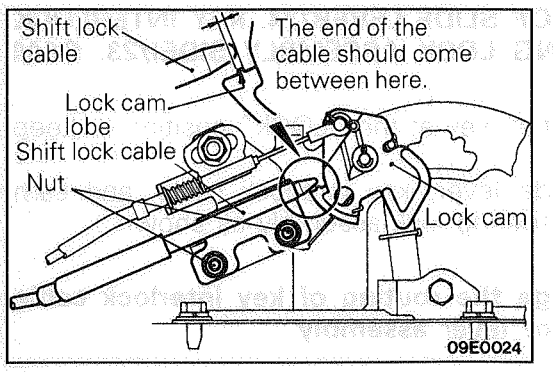

2. INSTALLATION OF SHIFT LOCK CABLE (SELECTOR LEVER ASSEMBLY SIDE)

(1) Move the selector lever to the "P" position.
(2) Adjust the shift lock cable so that the end of the cable (red mark) is at the position shown in the illustration, and then tighten the nut to the specified torque to clamp the shift lock cable.
(3) After installing the shift lock cable, check the shift lock mechanism. (Refer to P.23-33.)

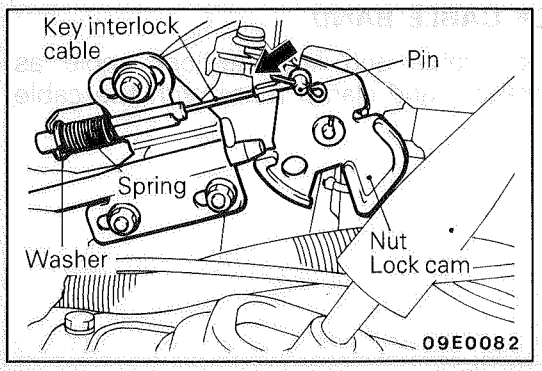

1. INSTALLATION OF KEY INTERLOCK CABLE (SELECTOR LEVER ASSEMBLY SIDE)

(1) Move the selector lever to the "P" position.
(2) Install the spring and washer that are inserted onto the key interlock cable as shown in the illustration.
(3) Gently push the lock cam until the pin stops in the direction of the arrow (⬅), and then tighten the nut to the specified torque to clamp the key interlock cable.
(4) After installing the key interlock cable, check the key interlock mechanism. (Refer to P.23-32.)

TSB Revision

SELECTOR LEVER ASSEMBLY

M23OE--

DISASSEMBLY AND REASSEMBLY

Removal steps

- 1. Overdrive switch/position light switch connector case
- 2. Selector knob
- 3. Push button
- 4. Spring
- 5. Overdrive switch
- 6. Knob cover
- 7. Guide
- 8. Upper panel
- 9. Slider
- 10. Lower panel
- 11. Position indicator light assembly
- 12. Sleeve
- 13. Bolt
- 14. Selector lever assembly
- 15. Bushing
- 16. Pipe
- 17. Pin
- 18. Spring
- 19. Support
- 20. Steel ball
- 21. Snap pin
- 22. Washer
- 23. Lock cam
- 24. Spring
- 25. Bracket assembly

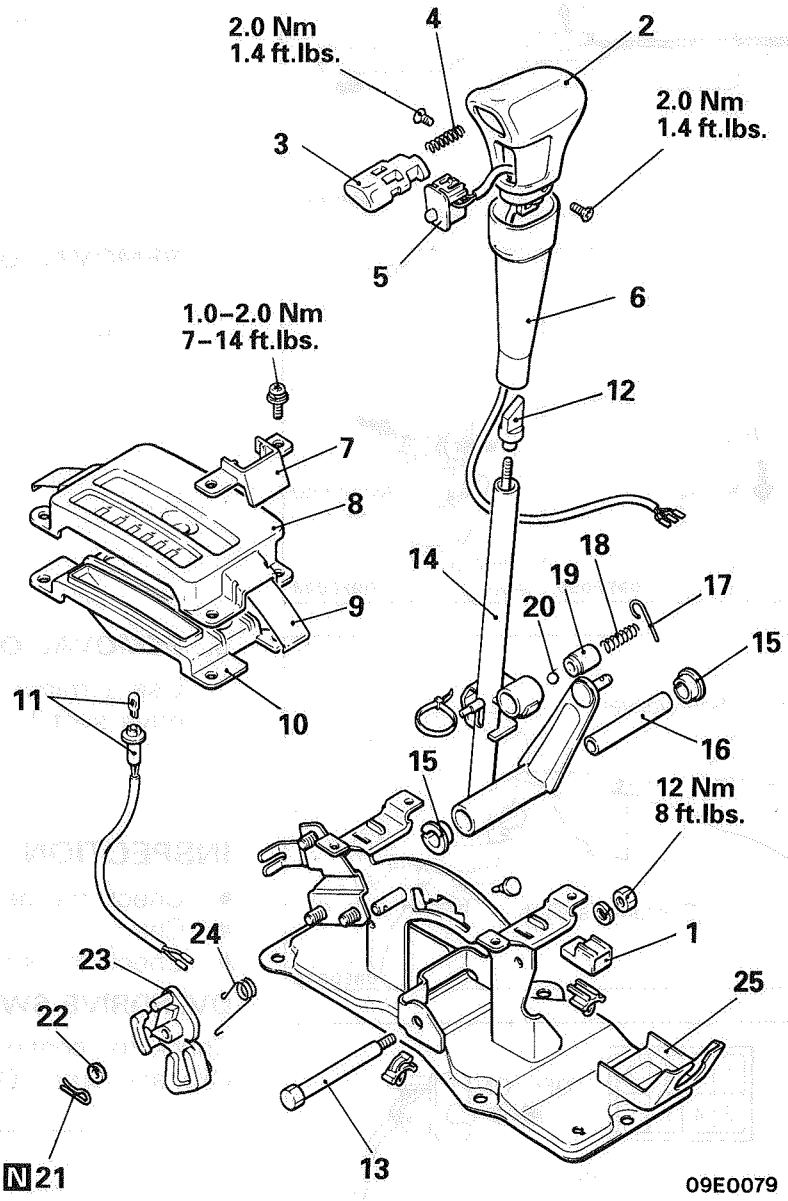

(arrow-located places)

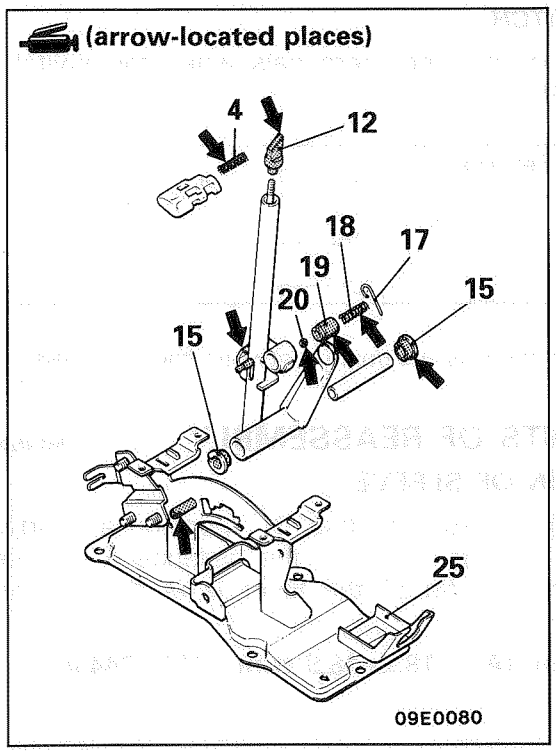

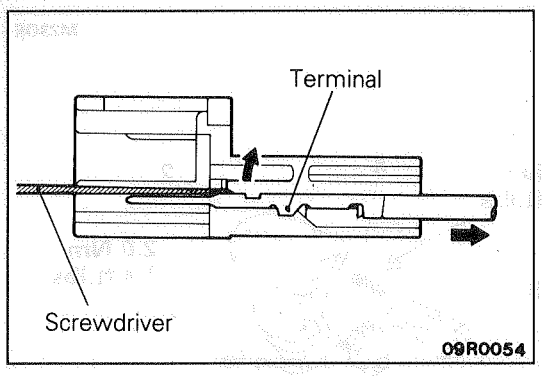

SERVICE POINTS OF DISASSEMBLY M23OFAF

1. REMOVAL OF OVERDRIVE SWITCH/POSITION LIGHT CONNECTOR CASE

Use a minus screwdriver or similar to remove the Overdrive switch/position light connector case from the terminal.

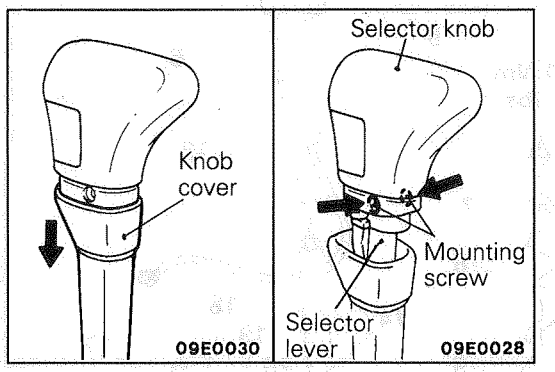

2. REMOVAL OF SELECTOR KNOB

(1) Press the knob cover downwards.
(2) Remove the front and back mounting screws and remove the selector knob from the selector lever.

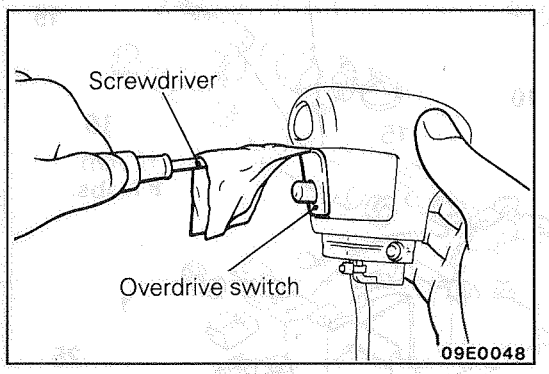

5. REMOVAL OF OVERDRIVE SWITCH

Use a minus screwdriver or similar to remove the Overdrive switch.

INSPECTION M23OGAG

- Check the detent plate for wear.
- Check the bushing for wear or damage.
- Check the spring for damage or deterioration.

OVERDRIVE SWITCH

Check for continuity between terminals when the switch is OFF and when ON.

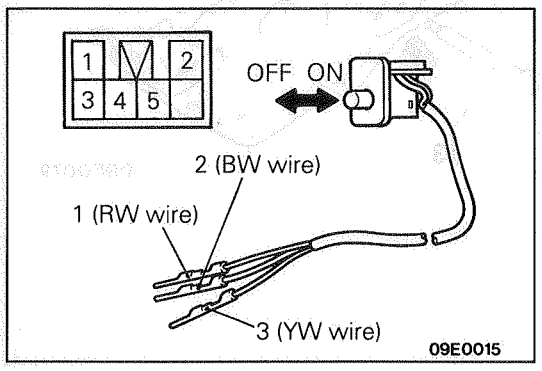

Switch position \ Terminal	3	4	5
OD ON	○		○
OD OFF	○	○	

NOTE
○—○ Indicate that there is continuity between the terminals.

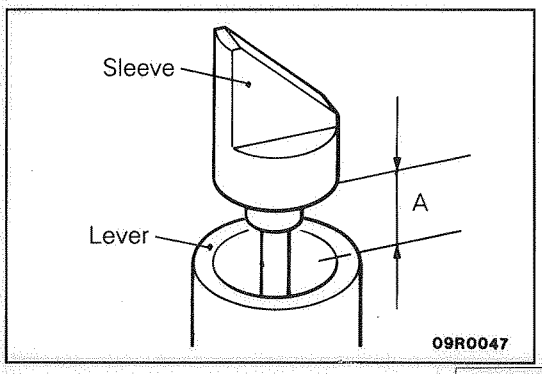

SERVICE POINTS OF REASSEMBLY M23NDAB

12. INSTALLATION OF SLEEVE

Move the selector lever to the "N" position and adjust the sleeve by turning it so that the distance A between the sleeve and the tip of the lever is at the standard value.

Standard value (A): 18.2–18.9 mm (.717–.744 in.)

TRANSMISSION FLUID COOLER, HOSES, PIPES

M23SA--

REMOVAL AND INSTALLATION

Pre-removal and Post-installation Operation
- Removal and Installation of Under Cover and Under Skid Plate
- Bleeding and Supplying of the Automatic Transmission Fluid. (Refer to P. 23-29.)

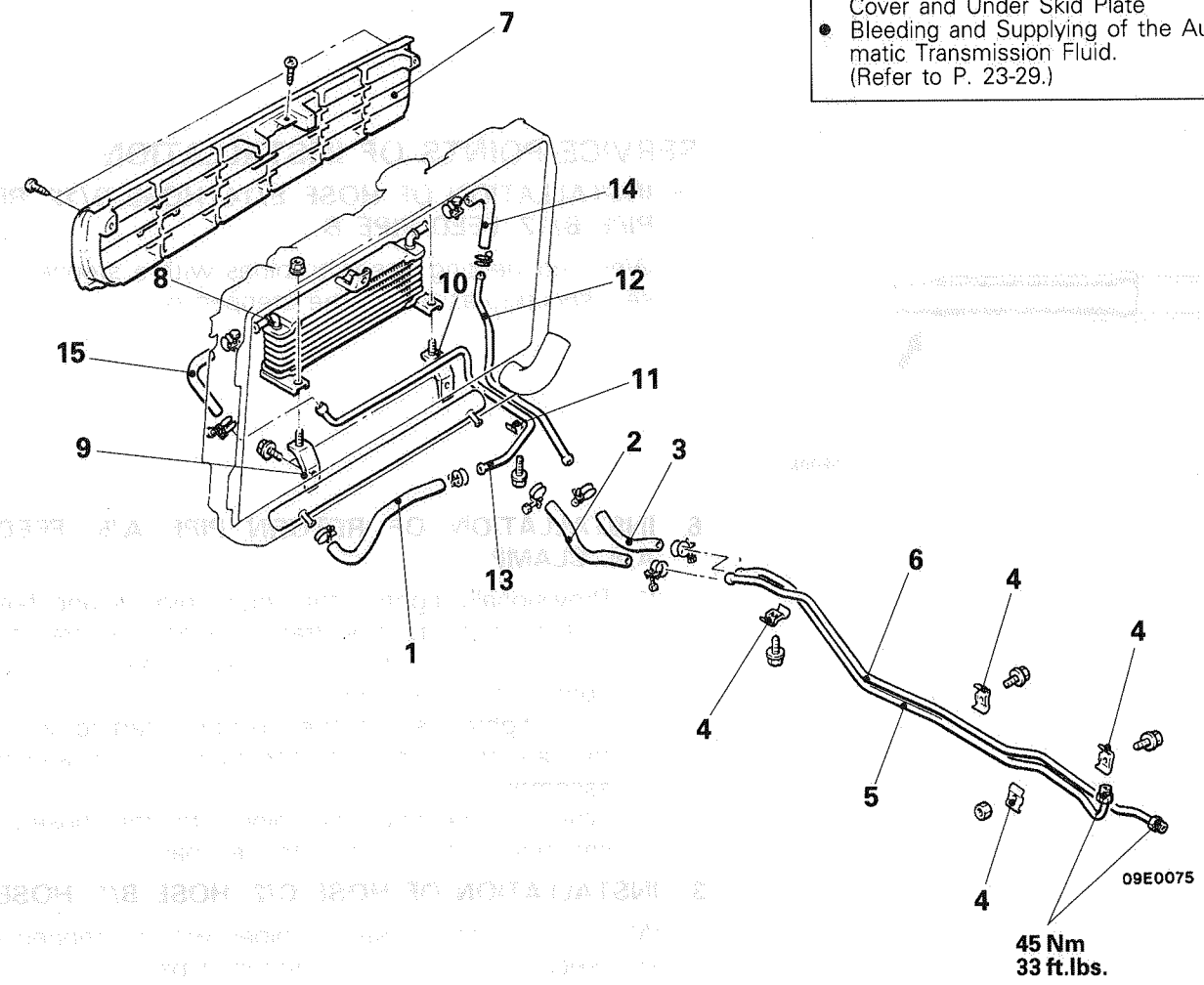

◆◆ 1. Hose A
◆◆ 2. Hose B
◆◆ 3. Hose C

Feed pipe A, Return pipe A removal steps

◆◆ 4. Clamp
◆◆ 5. Feed pipe A
◆◆ 6. Return pipe A

Fluid cooler assembly removal steps

7. Radiator grill
8. Fluid cooler assembly
9. Fluid cooler bracket (L.H.)
10. Fluid cooler bracket (R.H.)

Feed pipe B, Return pipe B removal steps

7. Radiator grill
11. Clamp
◆◆ 12. Feed pipe B
◆◆ 13. Return pipe B

Hose D, Hose E removal steps

7. Radiator grill
◆◆ 14. Hose D
◆◆ 15. Hose E

INSPECTION M23SCAH

- Check the hose and pipe for crack, damage and clog.
- Check for rusted or clogged radiator oil cooler.
- Check fluid cooler fins for bend, damage, and clogged foreign matter.

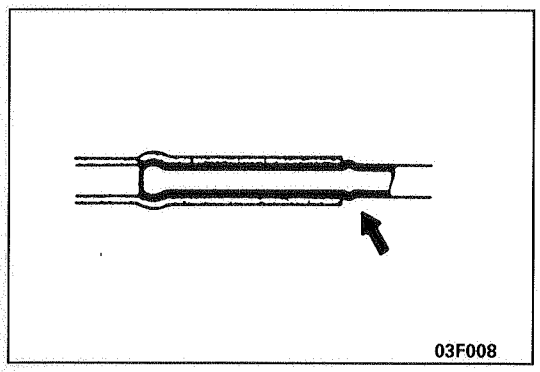

SERVICE POINTS OF INSTALLATION M23SDAE

15. INSTALLATION OF HOSE E/14. HOSE D/13. RETURN PIPE B/12. FEED PIPE B

When connecting hoses to pipes with a stepped part, insert securely as far as the stepped part.

6. INSTALLATION OF RETURN PIPE A/5. FEED PIPE A/4. CLAMP

(1) Provisionally tighten the return pipe A and feed pipe A flare nuts to the transmission and transfer, and after clamping the pipes with each clamp, fully tighten the flare nuts.
Also, tighten all of the clamps, starting with those that are the closest to the transmission and transfer assembly.
(2) When connecting the pipes to the hoses, insert securely as far as the stepped part.

3. INSTALLATION OF HOSE C/2. HOSE B/1. HOSE A

When connecting hoses to pipes with a stepped part,insert securely as far as the stepped part.

TRANSMISSION AND TRANSFER ASSEMBLY

M23LA--

REMOVAL AND INSTALLATION

Pre-removal and Post-installation Operation
- Removal and Installation of Transfer Control Lever Assembly. (Refer to P. 23-35.)
- Removal and Installation of Transfer Case Protector
- Removal and Installation of Front Exhaust Pipe
- Draining and Supplying of Automatic Transmission Fluid and Transfer Oil (Refer to P. 23-29 and GROUP 22– Service Adjustment Procedures.)
- Removal and Installation of Front and Rear Propeller Shaft (Refer to GROUP 25–Propeller Shaft.)

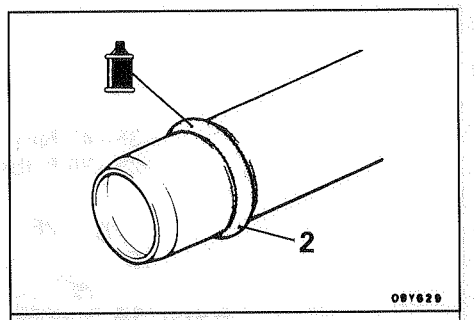

Fluid: Dia ATF SP or MITSUBISHI PLUS ATF or equivalent

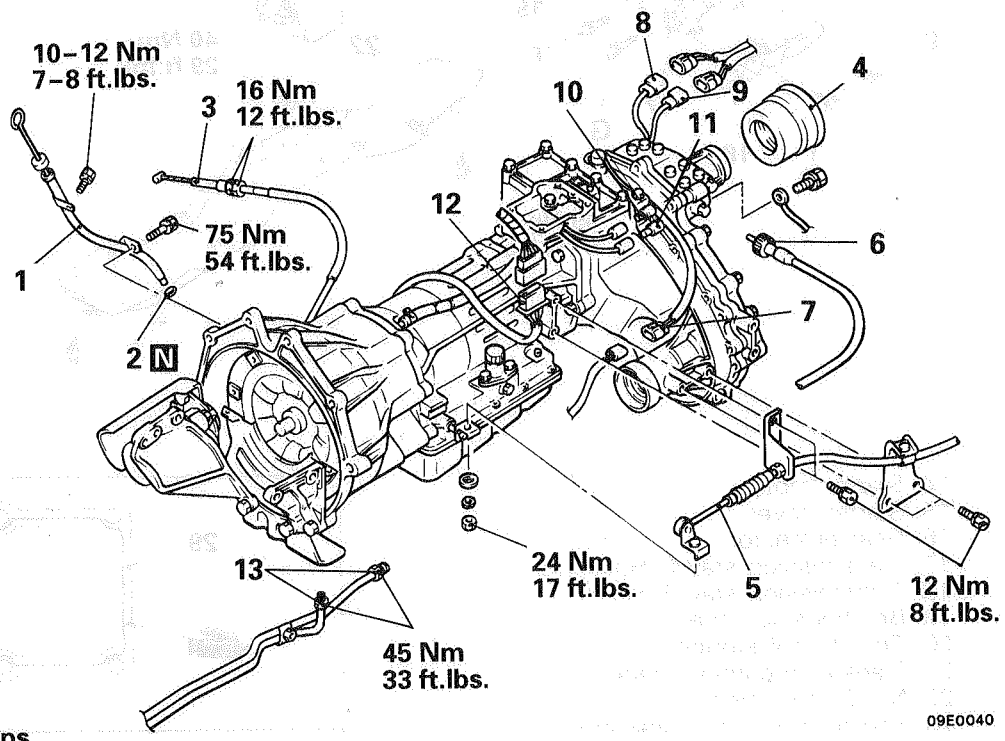

Removal steps
1. Fluid filler pipe
2. O-ring
3. Connection for throttle control cable
4. Dust seal guard
5. Connection for transmission control cable
6. Connection for speedometer cable
7. HI/LO detection switch connector
8. 4WD operation detection switch connector
9. Center diffenential lock operation detection switch connector
10. Center differential lock detection switch connector
11. 2WD/4WD detection switch connector
12. Inhibitor switch connector
13. Connection for fluid cooler pipe

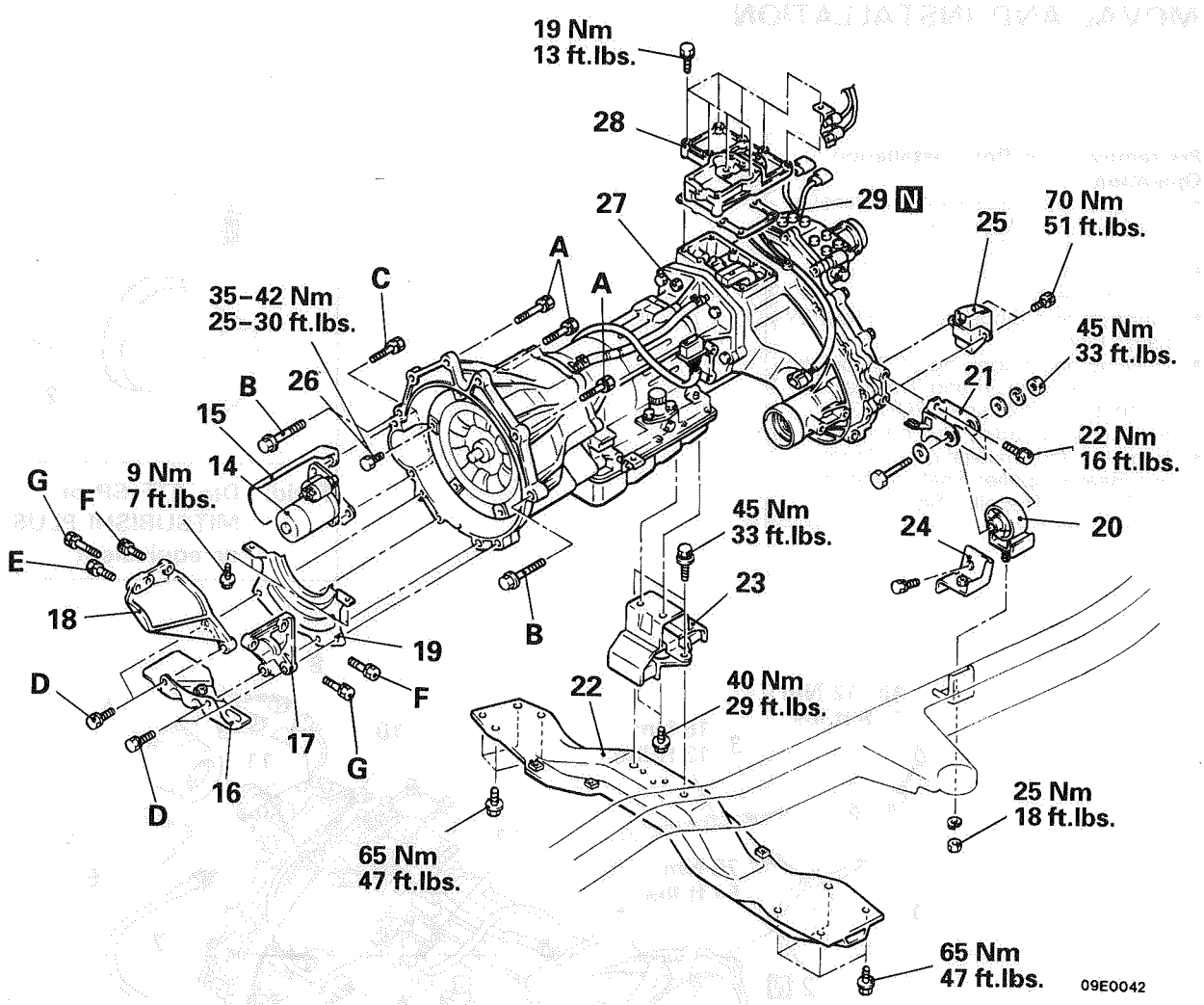

14. Starter motor
15. Starter cover
16. Heat protector
17. Transmission stay (L.H.)
18. Transmission stay (R.H.)
19. Bell housing cover
20. Transfer roll stopper
21. Transfer mounting bracket
22. No. 2 crossmember
23. Engine mount rear insulator
24. Transfer case protector bracket
25. Mass damper
26. Torque converter connecting bolt
27. Transmission and transfer assembly
28. Control housing
29. Gasket

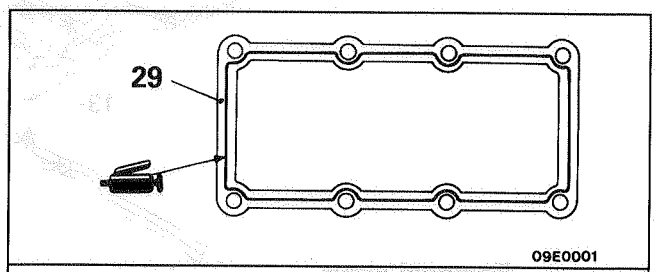

Sealant: 3M ATD Part No. 8663 or equivalent

	Nm	ft.lbs.	O.D. × Length mm (in.)	Bolt identification
A	75	54	7 12 x 40 (.5 x 1.6)	
B	90	65	7 12 x 55 (.5 x 2.2)	
C	31	22	7 10 x 55 (.4 x 2.2)	
D	36	26	7 10 x 40 (.4 x 1.6)	
E	75	54	7 12 x 35 (.5 x 1.4)	
F	42	31	7 10 x 30 (.4 x 1.2)	
G	75	54	7 12 x 50 (.5 x 2.0)	

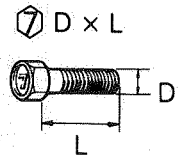

SERVICE POINTS OF REMOVAL M23LBAX

20. REMOVAL OF TRANSFER ROLL STOPPER

Before removing the transfer roll stopper, support the transmission and transfer assembly with a transmission jack.

26. REMOVAL OF TORQUE CONVERTER CONNECTING BOLT/27. TRANSMISSION AND TRANSFER ASSEMBLY

(1) Remove the connecting bolts (6 places) while turning the crank shaft.

(2) Gently lower the rear section of the transmission and transfer assembly to remove the assembly from the engine.

Caution
When removing the transmission and transfer assembly, push the torque converter over to the transmission and transfer assembly side so it does not remain on the engine side.

(3) Next, tilt the front section of the transmission and transfer assembly downwards and gently lower it, being careful that the rear section of the transfer does not touch the No.4 crossmember.

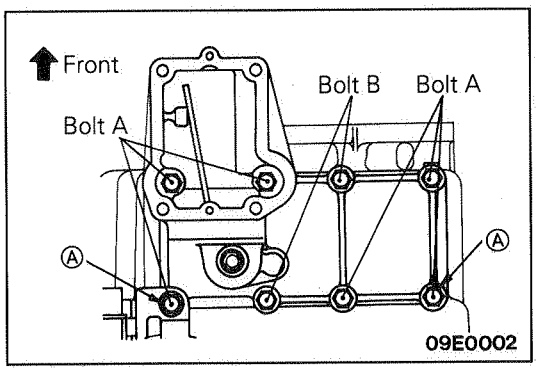

SERVICE POINTS OF INSTALLATION M23LDAZ

28. INSTALLATION OF CONTROL HOUSING

(1) Remove the adhesive sticking to the bolts attached to portion Ⓐ.

(2) Use a tap (M8 x 1.25) to remove the adhesive sticking to the screw holes (portion Ⓐ).

(3) Apply specified adhesive to the threads of the mounting bolts (portion Ⓐ).

Specified adhesive:
3M Stud Locking No. 4710 or equivalent

(4) The dimensions of the mounting bolts vary according to their mounting locations, so do not confuse them when installing.

Bolt to be used	O.D. × Length mm (in.)	Bolt identification
A	⑦ 8 x 25 (.3 x 1.0)	⑦ D × L
B	⑦ 8 x 27 (.3 x 1.1) <Reame bolt>	D, L 09Y512

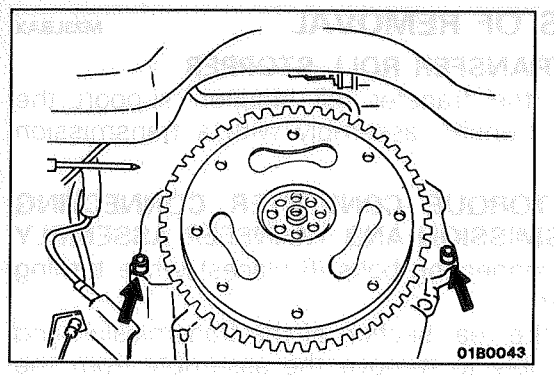

27. INSTALLATION OF TRANSMISSION AND TRANSFER ASSEMBLY

Align the engine transmission mounting bolt holes with the transmission and transfer assembly as shown in the illustration, and connect the transmission and transfer assembly to the engine.

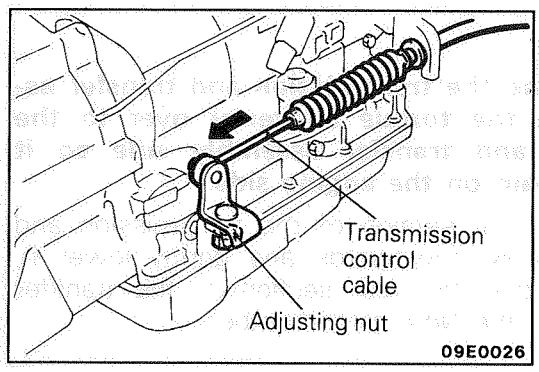

5. INSTALLATION OF TRANSMISSION CONTROL CABLE

After installing the transmission control cable, adjust it by the following procedure.

(1) Move the selector lever to the "N" position.

(2) Loosen the adjusting nut, gently pull the end of the transmission control cable in the direction of the arrow and then tighten the adjusting nut to the specified torque.

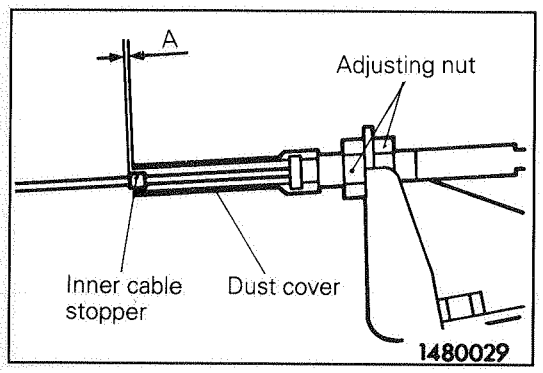

3. INSTALLATION OF THROTTLE CONTROL CABLE

After installing the throttle control cable, adjust it by the following procedure.

Open the throttle lever completely and adjust the cable with the adjusting nut so that the distance between the inner cable stopper and the dust cover end is at the standard value.

Standard value (A): 0–1 mm (0–.04 in.)

PROPELLER SHAFT

CONTENTS

M25AA--

PROPELLER SHAFT 3

SPECIAL TOOL 2

SPECIFICATIONS 2

General Specifications 2

Lubricants 2

Service Specifications 2

TROUBLESHOOTING 3

Noise and Vibration at High Speed

Noise at Start

SPECIFICATIONS

GENERAL SPECIFICATIONS

M25CA--

Items	M/T	A/T
Propeller shaft		
Type	2-joint type	2-joint type
Length (joint to joint) × O.D. mm (in.)		
Front propeller shaft	665 × 50.8 (26.2 × 2.00)	752 × 50.8 (29.6 × 2.00)
Rear propeller shaft	793 × 75 (31.2 × 2.95)	740 × 75 (29.1 × 2.95)
Universal joint		
Type	Cross type	
Lubrication Method	Nipple Type	
Journal O.D. mm (in.)		
Front propeller shaft	14.689 (.5783)	
Rear propelelr shaft	18.300 (.7205)	

SERVICE SPECIFICATIONS

M25CB--

Items	Specifications
Standard value	
Clearance between snap ring and groove wall of yoke mm (in.)	0.06 (.0024) or less
Limit	
Propeller shaft runout mm (in.)	0.6 (.024)

LUBRICANTS

M25CD--

Item	Specified lubricant
Sleeve yoke	Hypoid Gear Oil API classification GL-4 or higher SAE viscosity 80W, 75W–85W

SPECIAL TOOLS

M25DA--

Tool	Number	Name	Use
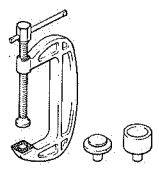	MB990840-01	Universal joint remover/installer	Disassembly and reassembly of universal joint
	MB991410	Collar	

TSB Revision

TROUBLESHOOTING

M25EAAAa

Symptom	Probable cause	Remedy
Noise at start	Worn journal bearing Worn sleeve yoke spline	Replace
	Loose propeller shaft installation	Retighten
Noise and vibration at high speed	Unbalanced propeller shaft	Replace
	Improper snap ring selection	Adjust the clearance
	Worn journal bearing	Replace

PROPELLER SHAFT

REMOVAL AND INSTALLATION

M25GA--

Pre-removal Operation
- Set the Transfer Shift Lever to "2H".
- Draining of the Transfer Gear Oil (Refer to GROUP 22, 23 – Service Adjustment Procedures.)

Post-installation Operation
- Supplying of the Transfer Gear Oil (Refer to GROUP 22, 23 – Service Adjustment Procedures.)

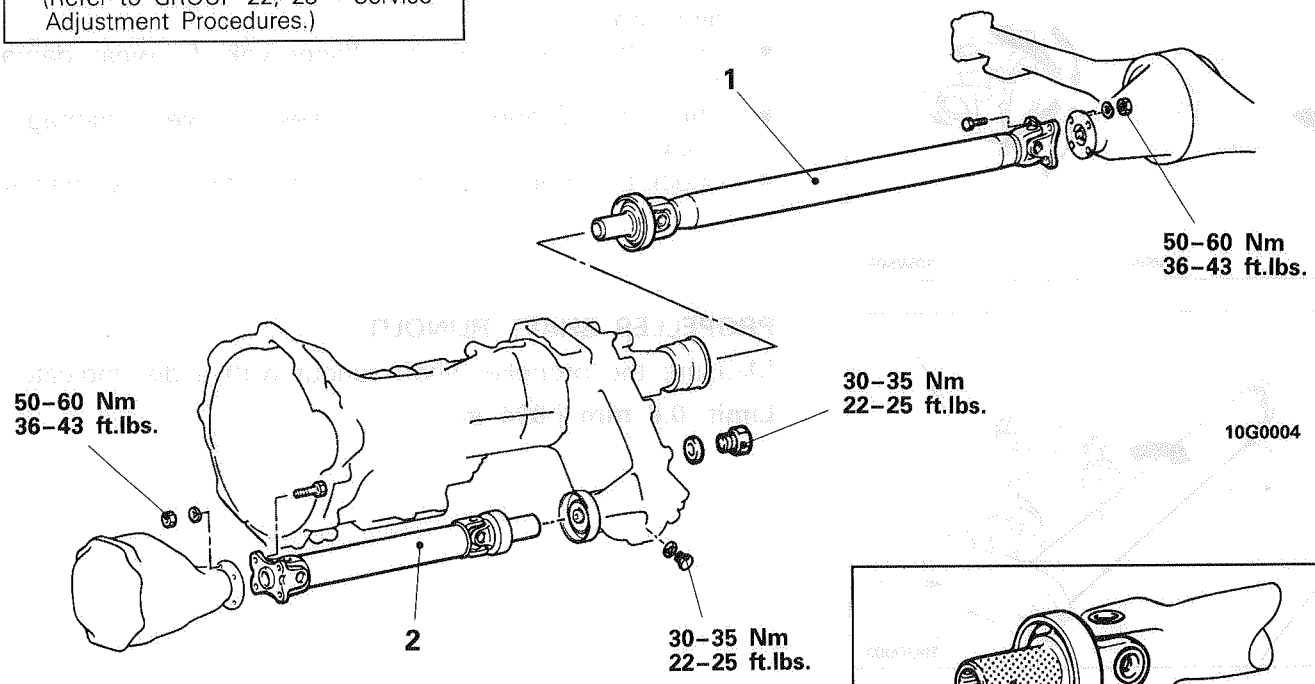

10G0004

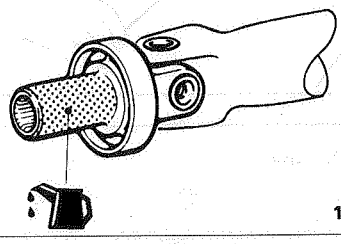

10G0001

Gear oil: Hypoid gear oil API classification GL-4 or higher/SAE viscosity 80W, 75–85W

Removal steps
1. Rear propeller shaft
2. Front propeller shaft

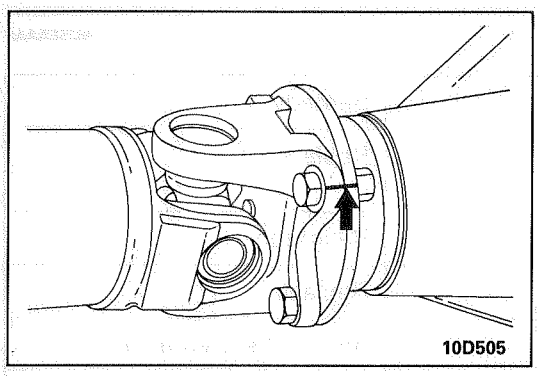
10D505

SERVICE POINTS OF REMOVAL M25GBAJ

1. REMOVAL OF REAR PROPELLER SHAFT/2. FRONT PROPELLER SHAFT

(1) Make mating marks on the flange yoke and the differential companion flange.

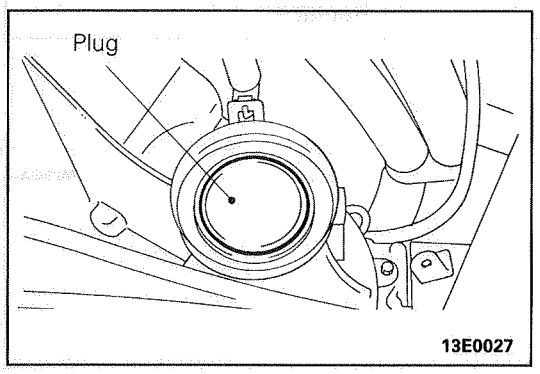

13E0027

(2) Use the plug as a cover so that no foreign material gets into the transmission or transfer.

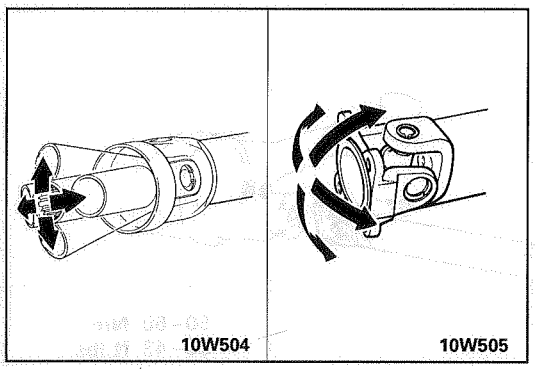
10W504 10W505

INSPECTION M25GCAB

- Check the universal joints for smooth operation in all directions.
- Check the sleeve yoke and flange yoke for wear, damage or cracks.
- Check the propeller shaft yokes for wear, damage or cracks.
- Check the propeller shaft for bends, twisting or damage.

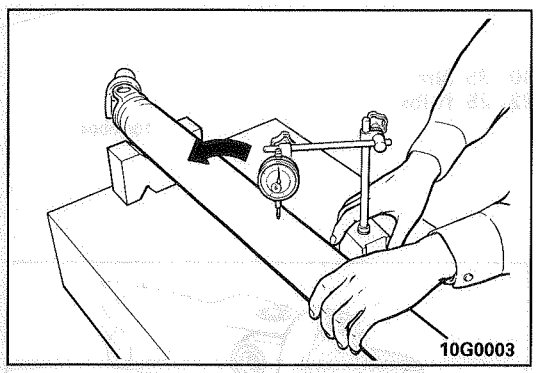
10G0003

PROPELLER SHAFT RUNOUT

Measure the propeller shaft runout with a dial indicator.

Limit: 0.6 mm (.024 in.)

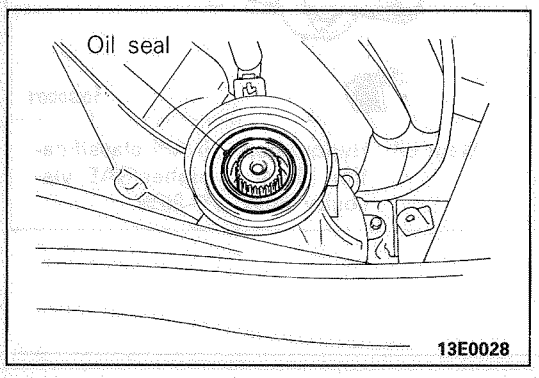

13E0028

SERVICE POINTS OF INSTALLATION M25GDAQ

2. INSTALLATION OF FRONT PROPELLER SHAFT/1. REAR PROPELLER SHAFT

(1) **Caution**
Be careful not to damage the oil seal lip section of the transmission and transfer.

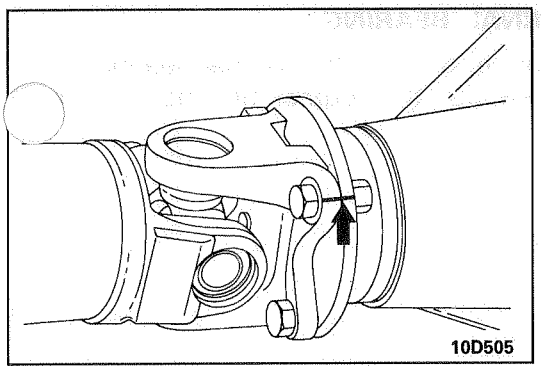

(2) Install the propeller shaft to the companion flange so that the mating marks are aligned.

Caution
If the threads of the bolts and nuts are stained with oil or grease, they can become loose. Completely remove oil or grease from the threads before tightening the bolts and nuts.

DISASSEMBLY AND REASSEMBLY

M25GE--

Front propeller shaft

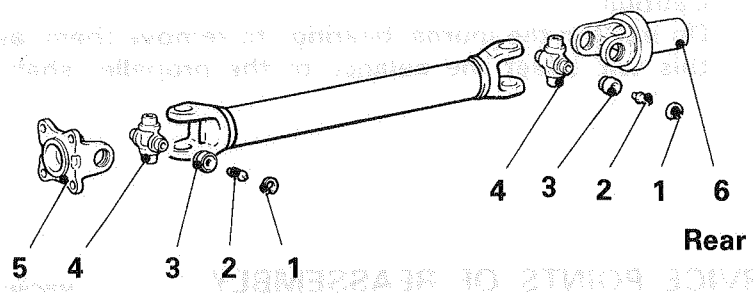

Rear propeller shaft

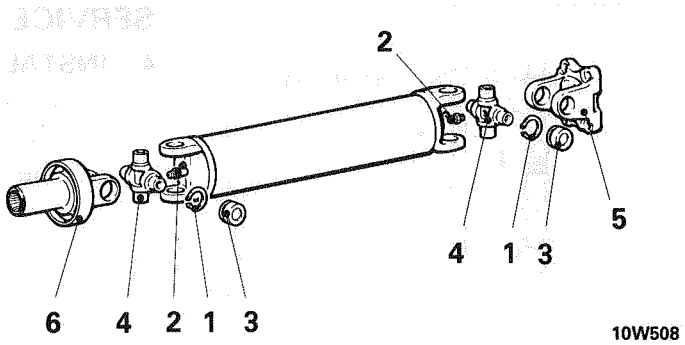

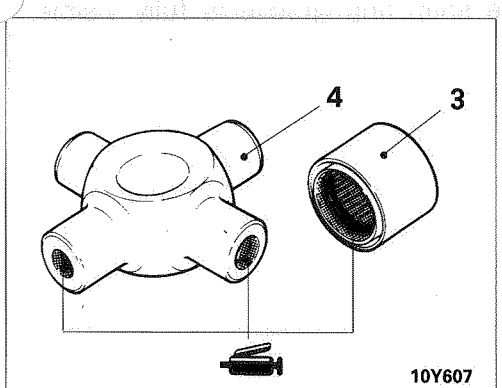

Caution
Do not apply grease excessively. Otherwise, faulty fitting of bearing caps and errors in the selection of snap rings may result.

Disassembly steps

1. Snap ring
2. Grease fitting
3. Journal bearing
4. Journal
5. Flange yoke
6. Sleeve yoke

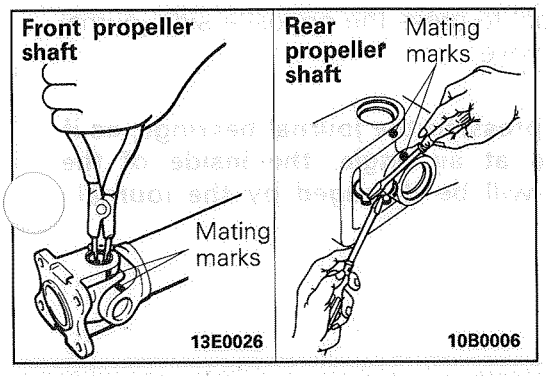

SERVICE POINTS OF DISASSEMBLY

M25GFAP

1. REMOVAL OF SNAP RING

Make mating marks on the yokes of the universal joint that is to be disassembled.

TSB Revision

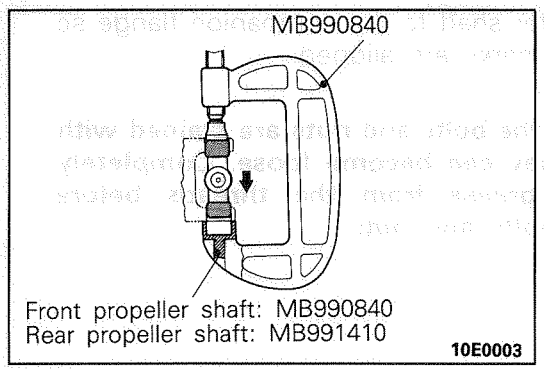

3. REMOVAL OF JOURNAL BEARING

(1) Use the special tool to press in the journal bearing on one side, and take out the journal bearing on the opposite side.

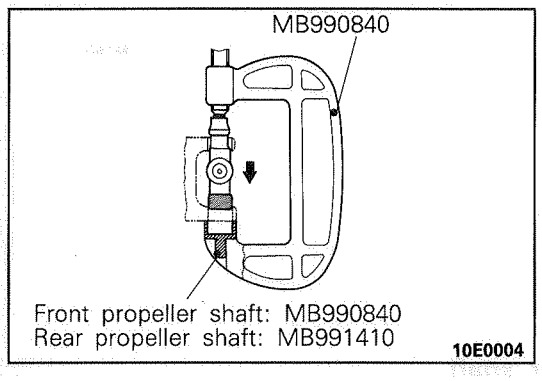

(2) Insert the special tool in the other side and press the journal to remove the first journal bearing that was pushed.

Caution
Do not tap the journal bearings to remove them, as this will upset the balance of the propeller shaft.

SERVICE POINTS OF REASSEMBLY M25GHAS

4. INSTALLATION OF JOURNAL/3. JOURNAL BEARING

(1) Fit the journal onto the yoke.
(2) Use the special tool to press the journal bearing into the yoke until the snap ring groove is fully visible.

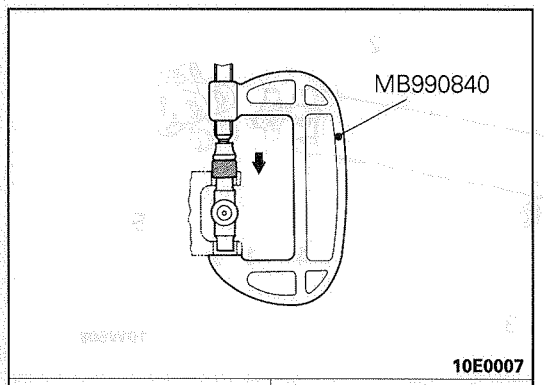

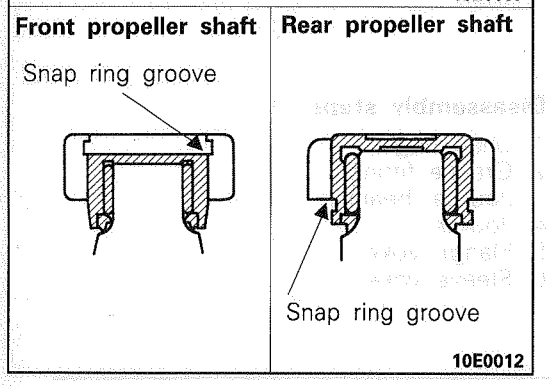

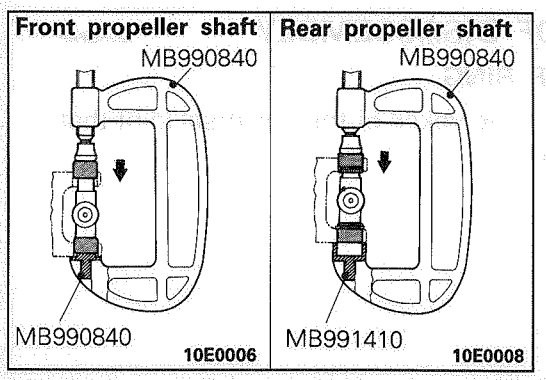

(3) Use the special tool to press the opposite side journal bearing into the yoke.

Caution
Be careful when pressing the journal bearings, as if they are pressed at an angle, the inside of the journal bearings will be damaged by the journal.

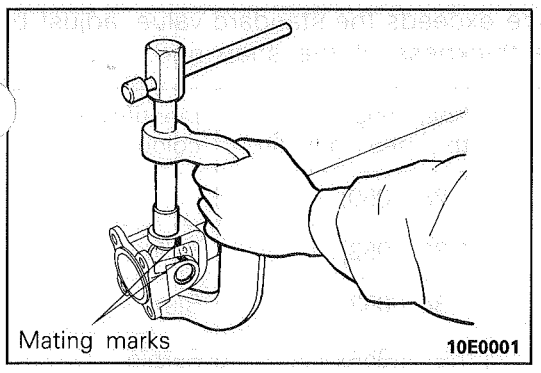

(4) Align the mating marks on the yoke and propeller shaft, and install the propeller shaft journal bearings in the method described in (2) and (3) above.

1. INSTALLATION OF SNAP RING

(1) Install a snap ring to one side of the journal.

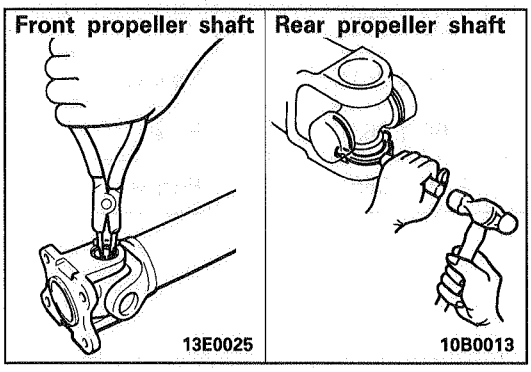

(2) Use the special tool at the opposite side of the installed snap ring to press in the journal bearing towards the snap ring.

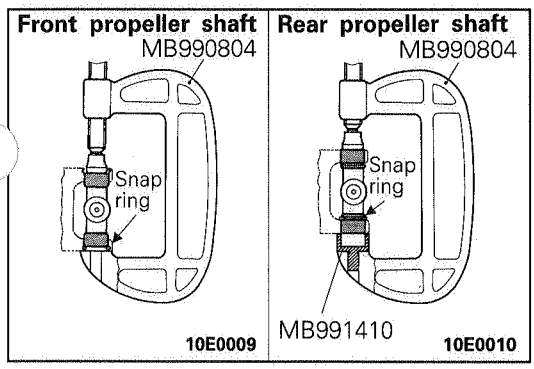

(3) Install the snap ring on the opposite side, and measure the clearance of the snap ring groove with a thickness gage.

Standard value: 0.06 mm (.0024 in.) or less

Caution
Always use snap rings of equal thicknesses on both sides.

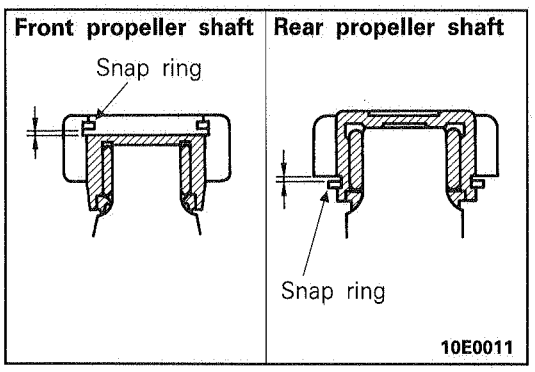

(4) If the clearance exceeds the standard value, adjust by changing the thickness of the snap ring.

	Snap ring thickness mm (in.)	Identification colour
Front propeller shaft	1.28 (.050)	–
	1.31 (.052)	Yellow
	1.34 (.053)	Blue
	1.37 (.054)	Purple
Rear propeller shaft	1.50 (.059)	–
	1.55 (.061)	Yellow
	1.60 (.063)	Blue
	1.65 (.065)	Purple

FRONT AXLE

CONTENTS

M26AA--

AXLE HUB 11

DIFFERENTIAL CARRIER 34

DIFFERENTIAL CARRIER AND FREE-WHEELING CLUTCH 30

DRIVE SHAFT 19

FREE-WHEELING CLUTCH 32

INNER SHAFT 26

KNUCKLE 16

SERVICE ADJUSTMENT PROCEDURES 8
- Differential Carrier Oil Seal Replacement 8
- Drive Shaft End Play Check 8
- Front Axle Gear Oil Level Check 8
- Front Axle Total Backlash Check 8
- Solenoid Valve Operation Check 10

SOLENOID VALVE AND VACUUM HOSE 29

SPECIAL TOOLS 3

SPECIFICATIONS 2
- General Specifications 2
- Lubricants 2
- Sealants and Adhesives 3
- Service Specifications 2

TROUBLESHOOTING 6
- DIFFERENTIAL 7
  - Bearing noise while driving or coasting
  - Constant noise
  - Gear noise while coasting
  - Gear noise while driving
  - Heat
  - Noise while turning
  - Oil leakage
- DRIVE SHAFT, INNER SHAFT 6
  - Noise due to excessive play of wheel in turning direction
  - Noise during wheel rotation
- FREE-WHEELING CLUTCH 6
  - Does not lock
  - Locks but does not become free

SPECIFICATIONS

M26CA--

GENERAL SPECIFICATIONS

Items	3000	
	Vehicles without wide fender	Vehicles with wide fender
Front axle hub bearing Type	Taper roller bearing	Taper roller bearing
Drive shaft Joint type Outer Inner	 Birfield joint Double-offset joint	 Birfield joint Double-offset joint
Differential Final drive gear type Reduction ratio Pinion gear type	 Hypoid gear 4.625 2 pinion	 Hypoid gear 4.875 2 pinion

SERVICE SPECIFICATIONS

M26CB--

Items		Specifications
Standard value		
Drive shaft end play	mm (in.)	0.4–0.7 (.016–.028)
Solenoid valve resistance [at 20°C (60°F)]	Ω	36–46
Front hub play in the axial direction	mm (in.)	0.05 (.0020) or less
Front hub turning resistance	Nm (in.lbs.)	0.3–1.3 (2.6–11.3)
[Spring scale reading]	N (lbs.)	5–18 (1.1–4.0)
Setting of D.O.J. boot length	mm (in.)	77–83 (3.03–3.27)
Clutch gear play (bearing end play)	mm (in.)	0.05–0.40 (.0020–.0160)
Final drive gear backlash	mm (in.)	0.11–0.16 (.0043–.0063)
Differential gear backlash	mm (in.)	0–0.076 (0–.0030)
Drive pinion rotation torque	Nm (in.lbs.)	
Without oil seal		
with anti-rust agent		0.3–0.5 (2.6–4.3)
with gear oil applied		0.15–0.25 (1.3–2.2)
With oil seal		
with anti-rust agent		0.5–0.7 (4.3–6.1)
with gear oil applied		0.35–0.45 (3.1–3.9)
Limit		
Front axle total backlash		11 (.43)
Drive gear runout	mm (in.)	0.05 (.0020)
Differential gear backlash	mm (in.)	0.2 (.0079)

LUBRICANTS

M26CD--

Items	Specified lubricants	Quantity
Front axle gear oil (Front differential)	Hypoid gear oil API classification GL-5 or higher SAE viscosity No. 90, 80W	1.20 dm^3 (1.27 qts.)
D.O.J. boot grease	Repair kit grease	100 g (3.5 oz.)

TSB Revision

SEALANTS AND ADHESIVES

M26CE--

Items	Specifications
Contact surface of drive flange and front axle hub Contact surface of hub cap and drive flange Contact surface of differential cover and differential carrier Free-wheeling clutch assembly	3M ATD Part No. 8661, 8663 or equivalent
Drive gear threaded hole	3M Stud Locking 4170 or equivalent

SPECIAL TOOLS

M26DA--

Tool	Number	Name	Use
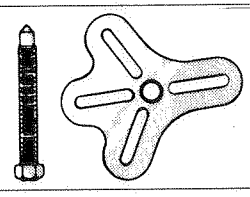	MB990241-01	Drive Shaft attachment	Insertion of inner shaft assembly (use with MB990211-01)
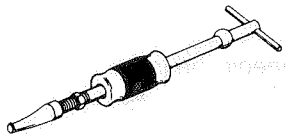	MB990211-01	Sliding hammer	Removal of housing tube oil seal Insertion of inner shaft assembly (use with MB990241-01)
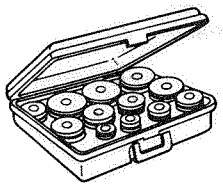	MB990925-01	Bearing and oil seal installer set	Pressing of front axle hub bearing outer race MB990935-01 Pressing of drive pinion bearing outer race MB990933-01, MB990934-01, MB990936-01 Pressing of differential carrier oil seal MB990934-01 Pressing of free wheel clutch oil seal MB990926-01 Pressing of free wheel clutch needle bearing MB990927-01
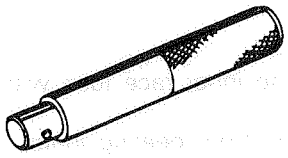	MB990938-01	Handle	Pressing of front axle hub bearing outer race Pressing of front axle hub oil seal Pressing of knuckle needle bearing Pressing of knuckle oil seal Pressing of housing tube oil seal Pressing of differential carrier oil seal Pressing of drive pinion bearing outer race Pressing of free wheel clutch oil seal Pressing of free wheel clutch needle bearing
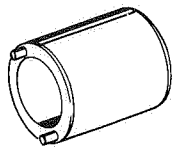	MB990954-01	Lock nut wrench	Removal and adjustment of lock nut

Tool	Number	Name	Use
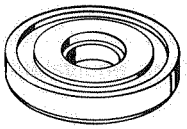	MB990955-01	Oil seal installer	Pressing of front axle hub oil seal Pressing of housing tube oil seal
	MB990811-01	Sidebearing cup remover step plate	Removal of side bearing inner race
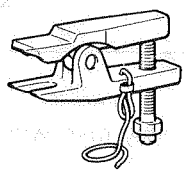	MB991406	Steering linkage puller	Removal of knuckle Disconnection of lower ball joint and upper ball joint
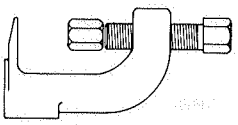	MB990635-01	Steering linkage puller	Removal of knuckle Disconnection of tie rod
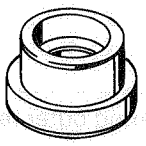	MB990956-01	Needle bearing installer	Pressing of knuckle needle bearing (use with MB990938-01)
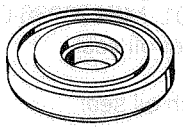	MB990985-01	Oil seal installer	Pressing of knuckle oil seal (use with MB990938-01)
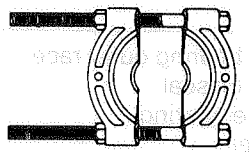	MD998348-01	Bearing separator	Removal and pressing of inner shaft bearing
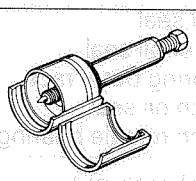	MB990339-01	Pinion carrier bearing puller	Removal of side bearing inner race (use with MB990811-01) Removal of drive pinion front bearing inner race
	MIT303173	Insert	

Tool	Number	Name	Use
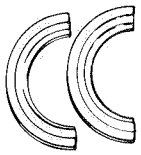	MIT44801	Collet set	Removal of side bearing inner race (use with MB990811-01) Removal of drive pinion front bearing inner race
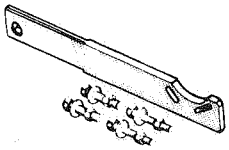	MB990767-01	End yoke holder	Holding of end yoke
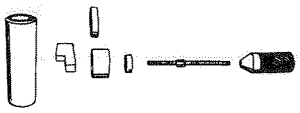	MB990901-01	Pinion height gage set	Adjustment of pinion height
	MB990802-01	Bearing installer	Pressing of drive pinion front bearing inner race Pressing of side bearing inner race
	MB990031-01	Drive pinion oil seal installer	Pressing of drive pinion oil seal
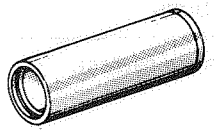	MIT304180	Handle	
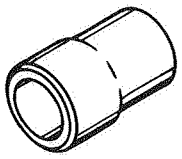	MB990799-01	Ball joint dust shield installer	Pressing of free wheel clutch bearing
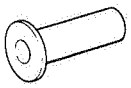	MIT310424	Drive pinion oil seal installer	Pressing of free wheel clutch oil seal
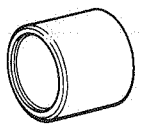	MB990890-01	Rear suspension bushing base	Pressing of free wheel clutch bearing

MB990925-01	Tool number	Installer disc O.D. mm (in.)
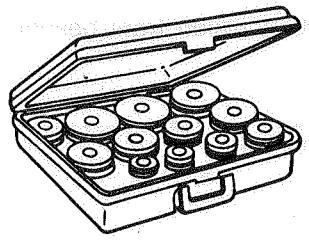	MB990926-01	39.0 (1.54)
	MB990927-01	45.0 (1.77)
	MB990928-01	49.5 (1.95)
	MB990929-01	51.0 (2.01)
	MB990930-01	54.0 (2.13)
	MB990931-01	57.0 (2.24)
	MB990932-01	61.0 (2.40)
	MB990933-01	63.5 (2.50)
	MB990934-01	67.5 (2.66)
	MB990935-01	71.5 (2.81)
	MB990936-01	75.5 (2.97)
	MB990937-01	79.0 (3.11)

TROUBLESHOOTING

M26EAAA

Symptom	Probable cause	Remedy
FREE-WHEELING CLUTCH Does not lock	Negative pressure leakage	Correct or replace vacuum hose
	Vacuum tank damaged Check valve damaged Actuator assembly damaged Shift fork damaged Clutch gear damaged Main shaft damaged Thrust bushing damaged	Replace
	Actuator assembly attaching bolt loose	Retighten attaching bolts
Locks but does not become free	Foreign substances on tooth surfaces of main shaft and clutch sleeve Foreign substances on tooth surfaces of clutch sleeve and clutch gear	Clean tooth surfaces or replace
DRIVE SHAFT, INNER SHAFT Noise during wheel rotation	Housing tube bent Inner shaft bent	Replace
	Inner shaft bearing worn, pounding	Replace
	Drive shaft assembly worn damaged, bent	Check or replace
Noise due to excessive play of wheel in turning direction	Inner shaft and side gear serration play	Replace
	Drive shaft and side gear serration play	Replace

Symptom	Probable cause	Remedy
DIFFERENTIAL Constant noise	Improper adjustment of drive gear and drive pinion (poor meshing)	Correct or replace
	Loose, worn or damaged side bearing	Correct or replace
	Loose, worn or damaged drive pinion bearing	Correct or replace
	Worn drive gear, drive pinion	Correct or replace
	Worn side gear thrust washer or pinion shaft	Replace
	Deformed drive gear or differential case	Replace
	Damaged gear	Replace
	Foreign material	Eliminate the foreign material and check; replace if necessary
	No oil	Fill or change
Gear noise while driving	Poor gear engagement	Correct or replace
	Improper gear adjustment	Correct or replace
	Improper drive pinion preload adjustment	Correct or replace
	Damaged gear	Replace
	Foreign material	Eliminate the foreign material and check; replace if necessary
	Insufficient oil	Fill or change
Gear noise while coasting	Improper drive pinion rotation torque adjustment	Correct or replace
	Damaged differential gear	Replace
Bearing noise while driving or coasting	Cracked or damaged drive pinion rear bearing	Replace
Noise while turning	Loose side bearing	Replace
	Damaged side gear, pinion gear or pinion shaft	Replace
Heat	Improper differential gear backlash Excessive preload	Adjust
	Insufficient oil	Fill or change
Oil leakage	Clogged vent plug	Clean or replace
	Cover tightened not Seal malfunction	Retighten, apply sealant, or replace the gasket
	Worn or damaged oil seal	Replace
	Excessive oil	Adjust the oil level

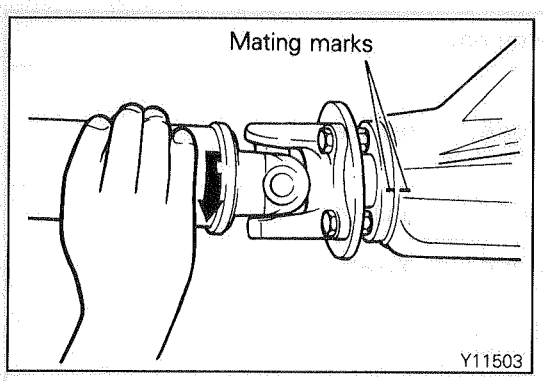

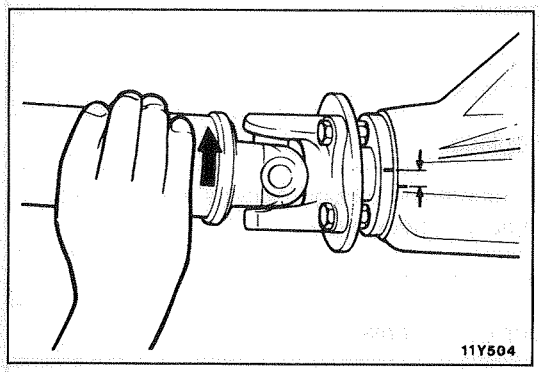

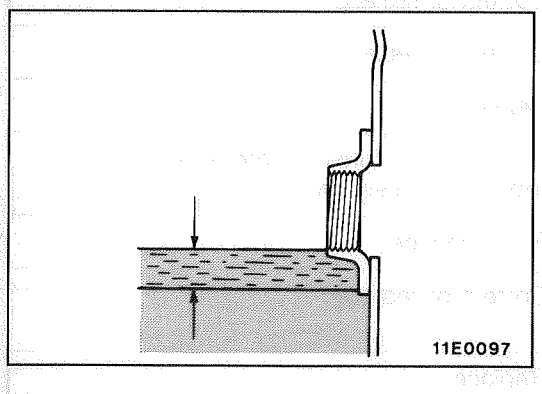

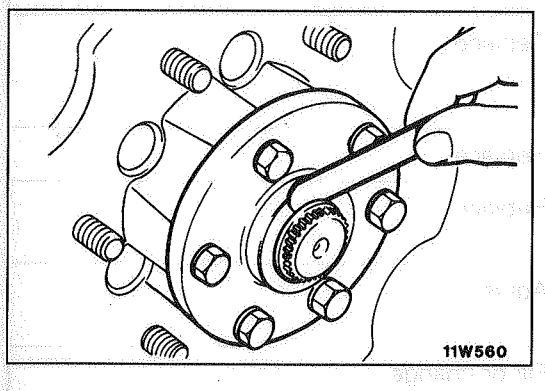

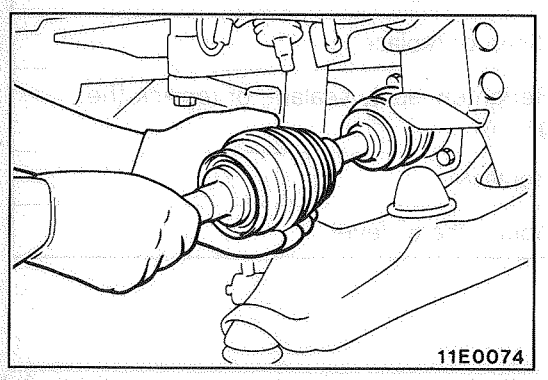

SERVICE ADJUSTMENT PROCEDURES

FRONT AXLE TOTAL BACKLASH CHECK M26FDAD

1. If the vehicle vibrates and produces a booming sound, measure the front axle total backlash by the following procedure to see if the differential carrier assembly requires removal.
   (1) Place the transfer control lever in 4H position and drive the vehicle until the 4WD indicator changes from flashing to illuminated.
   (2) Hold the wheels and place the transfer control lever in 2H position.
   (3) Turn the companion flange clockwise until all play is removed. Mate mark on the dust cover of the companion flange with that on the differential carrier.
   (4) Turn the companion flange counterclockwise until all play is removed and measure the amount of distance through which the mating marks moved.

   Limit: 11 mm (.43 in.)
2. If the backlash exceeds the limit, remove the differential carrier assembly and final drive gear, and check for differential gear meshing condition and drive shaft or inner shaft spline looseness.

FRONT AXLE GEAR OIL LEVEL CHECK M26FEAB

Remove the filler plug, and check the gear oil level. Check that gear oil level is not 8 mm (.31 in.) below the bottom of filler plug hole.

Specified gear oil: Hypoid gear oil API classification GL-5 or higher, SAE viscosity No. 90, 80W [1.20 dm^3 (1.27 qts.)]

DRIVE SHAFT END PLAY CHECK M26FFAB

1. Jack the vehicle up and remove the front wheels.
2. Remove the hub cap.
3. Manually push the drive shaft in the direction in which it will closely contact the knuckle.
4. As shown in the figure, use a feeler gage to measure the clearance between the drive flange and snap ring.
   snap ring.

   Standard value: 0.4–0.7 mm (.016–.028 in.)
5. If the play is out of standard value, adjust by adding or removing shims.

DIFFERENTIAL CARRIER OIL SEAL REPLACEMENT M26FGAB

1. Remove the under cover.
2. Remove the front hub and knuckle assembly.
3. Remove the left drive shaft.

Caution
When pulling the left drive shaft from the differential carrier assembly, be careful that the drive shaft spline does not damage the oil seal.

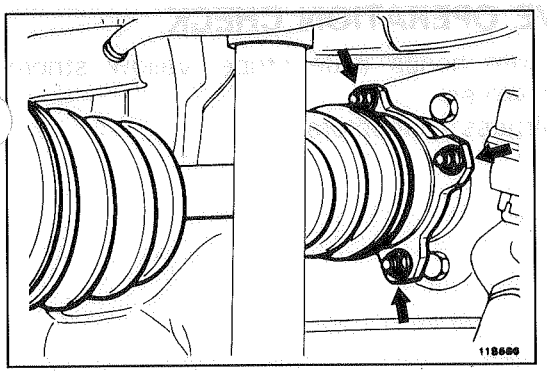

4. Remove the right drive shaft from the inner shaft assembly.
5. After removing the shock absorber (RH) lower mounting bolt, remove the inner shaft.

Caution
When pulling the inner shaft assembly from the differential carrier, be careful that the spline of the inner shaft does not damage the oil seal.

6. Remove the actuator mounting bolt from the housing tube and remove the harness from the clamp.
7. Remove the differential mounting bracket (R.H.) and housing tube.
8. Use the special tool to remove the oil seal.

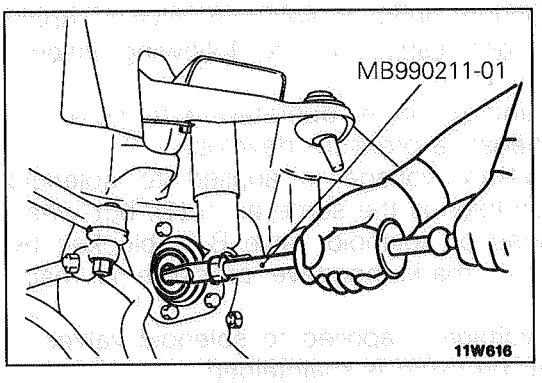

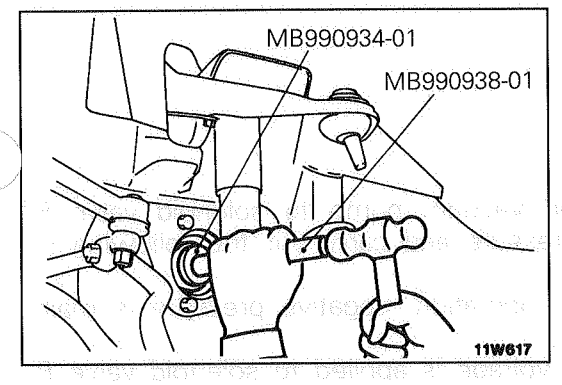

9. Press-fit the oil seal positively by using the special tools.

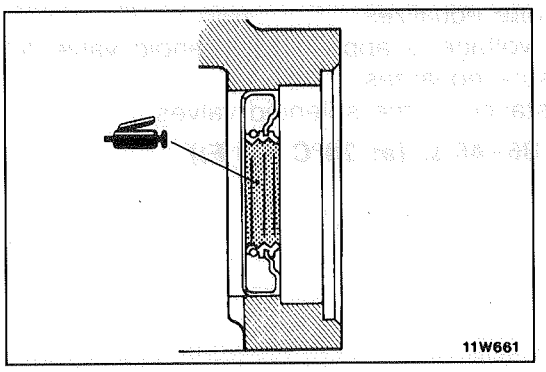

10. Apply multi-purpose grease to the lip of the oil seal and install it to the drive shaft (LH).
    For the right side, apply multi-purpose grease to the lip of the oil seal and install to the housing tube and differential mounting bracket (RH).

11. Install the inner shaft and drive shaft (RH).

Caution
1. **Do not damage the lip of the oil seal.**
2. **The circlip attached to the BJ side spline part of the drive shaft should be replaced with a new clip.**

12. Install the actuator and secure the harness with the clamp.
13. Install the shock absorber.
14. Install the hub and knuckle assembly.
15. Install the under cover.

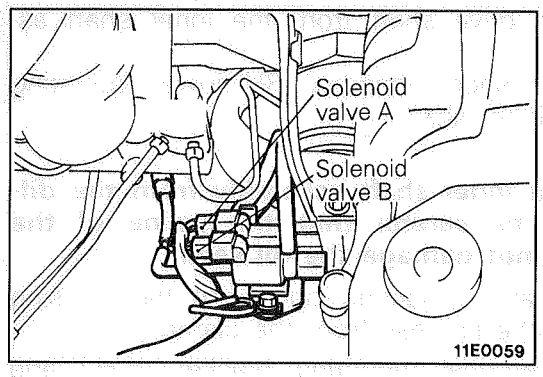

SOLENOID VALVE OPERATION CHECK

1. Remove the vacuum hoses (blue stripe, yellow stripe) from the solenoid valves.
2. Disconnect the harness connectors.

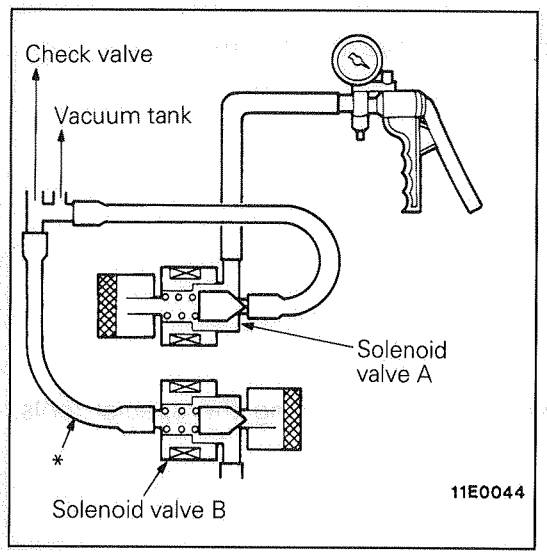

3. Connect a hand vacuum pump to solenoid valve A. Apply negative pressure and carry out the following inspections.
   (1) Even if the hand pump is operated with no other operation, no negative pressure develops.
   (2) Even when battery voltage is applied to solenoid valve A, the condition is the same as in (1), but when the vacuum hose of solenoid valve B is blocked by bending at the * mark, negative pressure is maintained.
   (3) When battery voltage is applied to solenoid valves A and B, negative pressure is maintained.

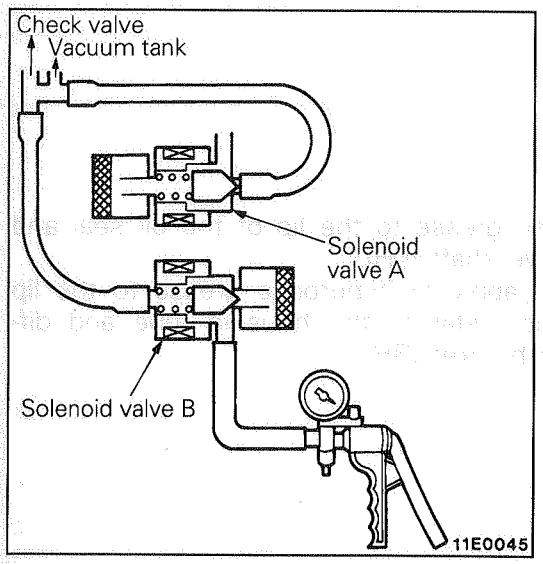

4. Connect the hand vacuum pump to solenoid valve B. Apply negative pressure and carry out the following inspections.
   (1) With no other operation, negative pressure is maintained.
   (2) When battery voltage is applied to solenoid valve B, negative pressure equalizes.
   (3) When battery voltage is applied to solenoid valve A, negative pressure equalizes.
5. Measure the resistance of the solenoid valves.
   Standard value: 36–46 Ω [at 20°C (60°F)]

AXLE HUB

M26GA--

REMOVAL AND INSTALLATION

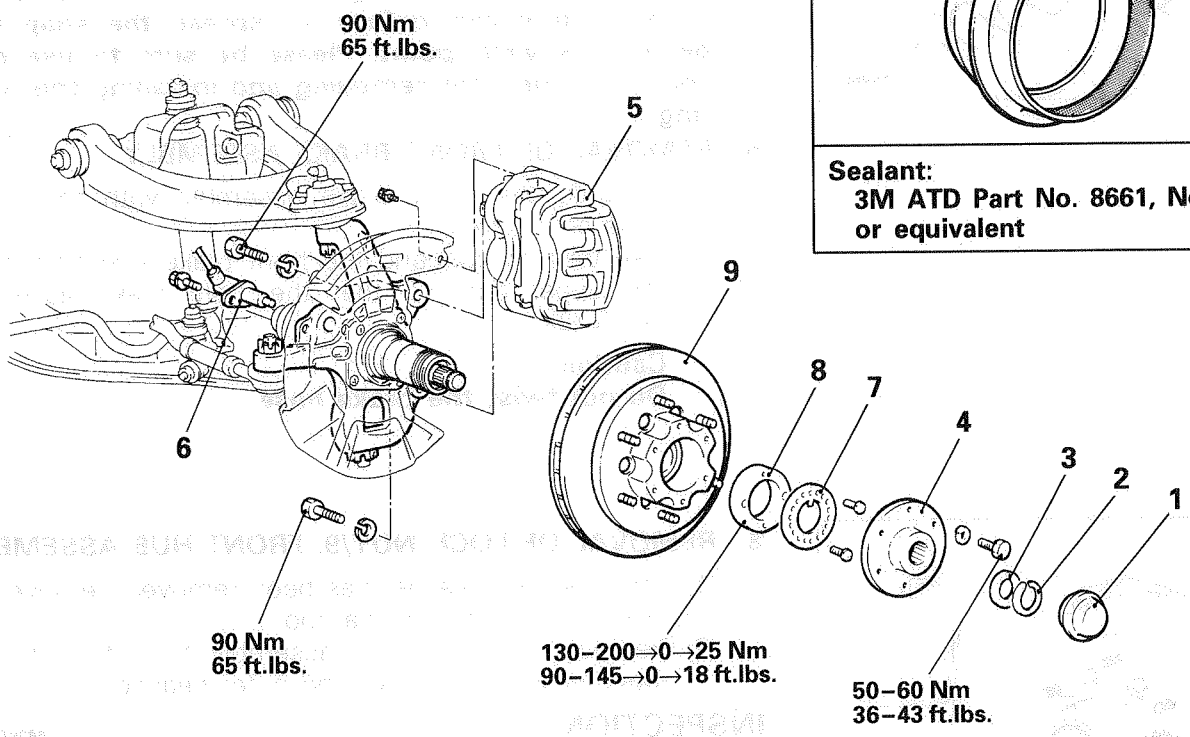

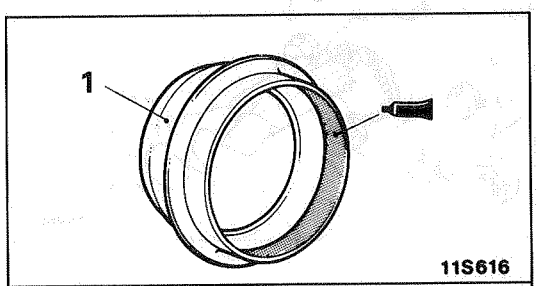

Sealant:
3M ATD Part No. 8661, No. 8663 or equivalent

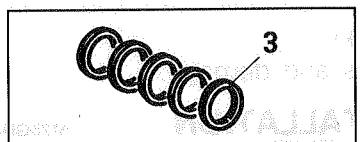

Front hub shim set

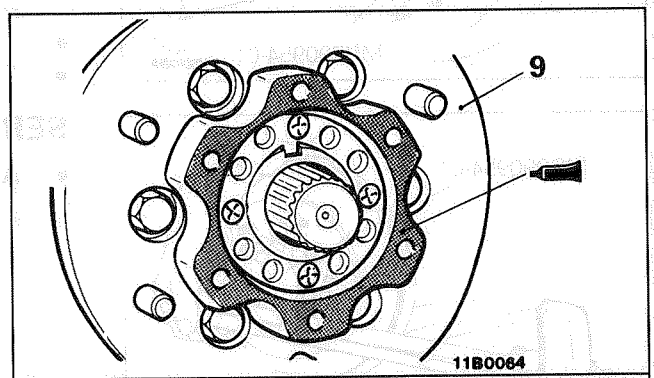

Sealant: 3M ATD Part No. 8661, No. 8663 or equivalent

Caution
Make sure that there is no excess specified sealant on the hub outside surface.

Removal steps

1. Hub cap
- ◆◆ • Adjustment of drive shaft end play
- ◆◆ 2. Snap ring
3. Shim
4. Drive flange
- ◆◆ 5. Front brake assembly
6. Speed sensor <Vehicles with ABS>
(Refer to GROUP 35 – Wheel Speed Sensor.)
7. Lock washer
- ◆◆ • Adjustment of wheel bearing preload
- ◆◆ 8. Lock nut
- ◆◆ 9. Front hub assembly

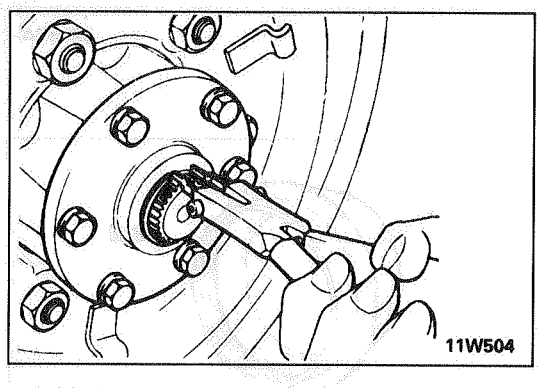

SERVICE POINTS OF REMOVAL M26GBAG

2. REMOVAL OF SNAP RING

Using a snap ring pliers, remove the snap ring from the drive shaft.

Caution
The proper tool for removing and installing the snap ring is a pair of snap ring pliers. Use of a screwdriver or other tool can deform or spread the snap ring beyond its yield point. Please be sure to use only snap ring pliers for removing and installing this snap ring.

5. REMOVAL OF FRONT BRAKE ASSEMBLY

(1) Remove the front brake assembly with the brake hose connected.
(2) Use wire to suspend the front brake assembly from the upper arm so that the front brake assembly won't fall.

Caution
Do not twist the brake hose.

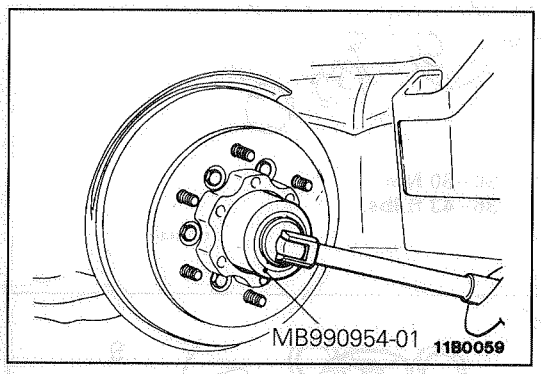

8. REMOVAL OF LOCK NUT/9. FRONT HUB ASSEMBLY

(1) After the lock washer has been removed, remove the lock nut with the special tool.
(2) Remove the front hub assembly from the knuckle together with the inner and outer bearings.

INSPECTION M26GCAA

- Check the wheel bearing for seizure, discoloration and rough raceway surface.
- Check the front hub for cracks.
- Check the oil seals for cracks and damage.

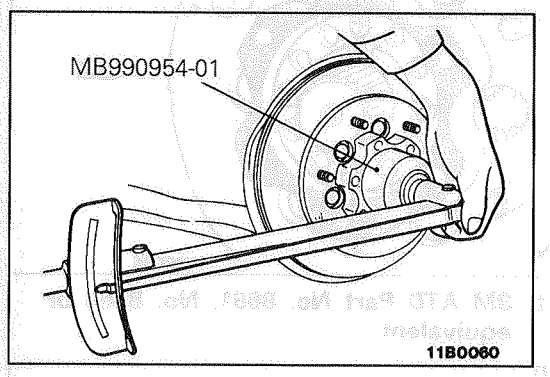

SERVICE POINTS OF INSTALLATION M26GDAH

- **ADJUSTMENT OF WHEEL BEARING PRELOAD**

(1) Using the special tool, tighten the lock nut by the following procedures.

Tighten to 130–200 Nm (94–145 ft.lbs.)
↓
Loosen to 0 Nm (0 ft.lbs.)
↓
Retighten to 25 Nm (18 ft.lbs.) and then loosen 30°–40°

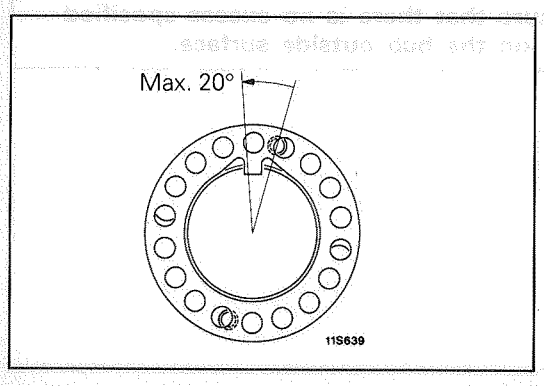

(2) Install the lock washer. If the hole position is not aligned with the lock nut, move it within a range of not more than 20° until the holes are aligned.

TSB Revision

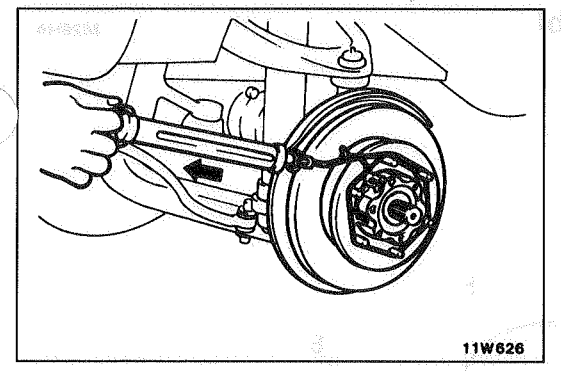

(3) Loosen the lock nut approximately 30 to 40 degrees to adjust the front hub's turning resistance and play in the axial direction so that they agree with the standard values.

Standard value: 0.3–1.3 Nm (2.6–11.3 in.lbs.) [Spring scale reading 5–18 N (1.1–4.0 lbs.)]

Standard value: 0.05 mm (.0020 in.) or less

NOTE
If adjustment is not possible, the bearing may be incorrectly installed; check and, if necessary, repair.
The lubrication condition should as also be checked.

(4) Mount the lock washer. If the lock washer holes do not align with the lock nut holes, loosen the lock nut to align them.

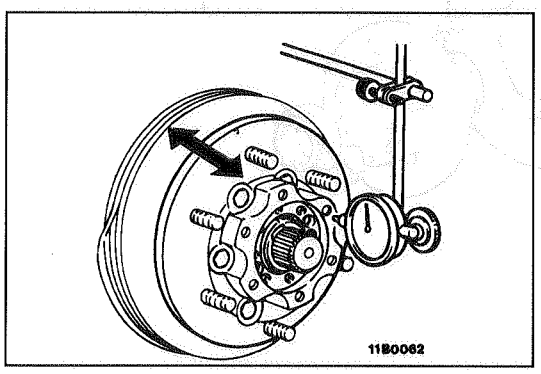

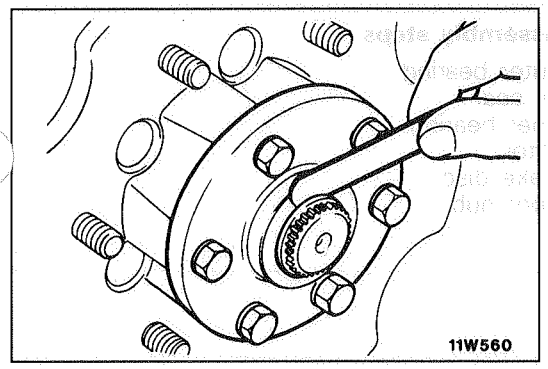

- **ADJUSTMENT OF DRIVE SHAFT END PLAY**

After the installation of shim and snap ring, check the drive shaft end play by the following procedure.

(1) Install the shim and snap ring to the drive shaft.
(2) Push the drive shaft in by hand towards the knuckle until they touch.
(3) Measure the clearance between the drive flange and the shim with a feeler gage as shown in the illustration.

Standard value: 0.4–0.7mm (.016–.028 in.)

(4) If the amount of play is outside the standard value, adjust by selecting a shim that will bring the play to the standard value.

DISASSEMBLY AND REASSEMBLY (Front Axle Hub)

M26HA--

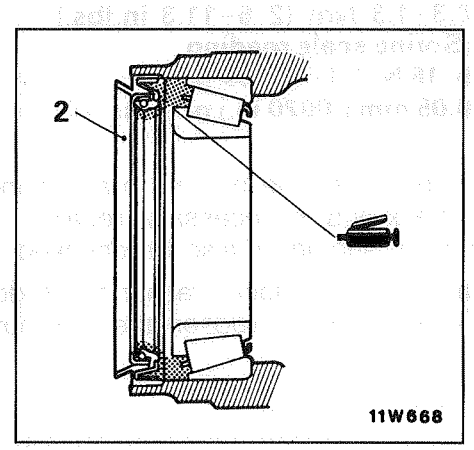

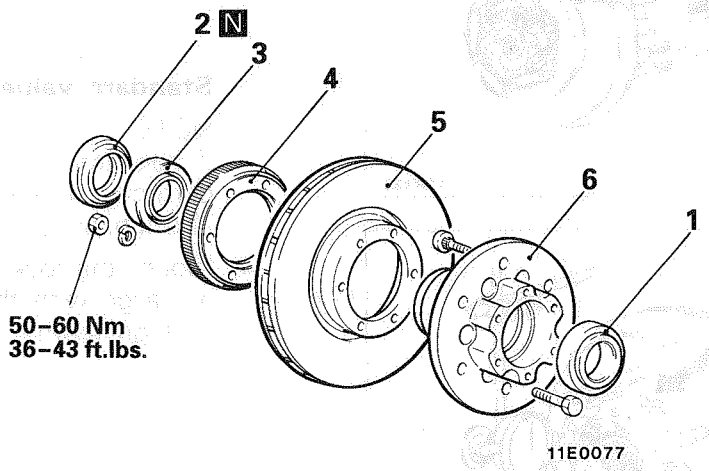

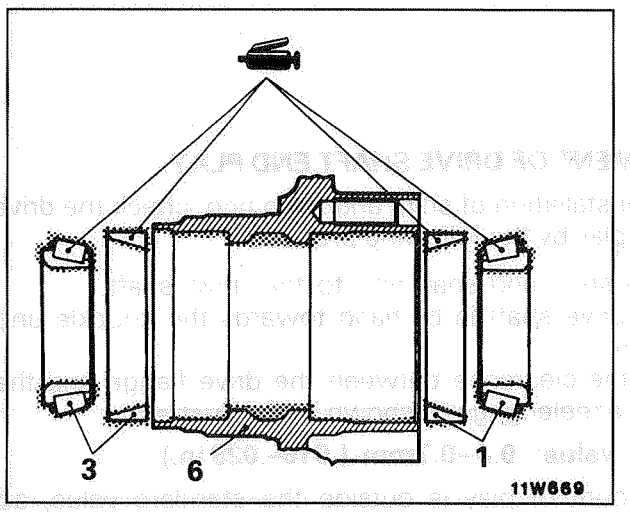

Disassembly steps

1. Outer bearing
2. Oil seal
3. Inner bearing
4. Rotor
5. Brake disc
6. Front hub

TSB Revision

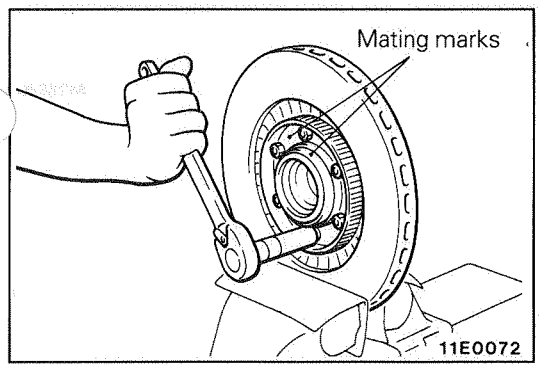

SERVICE POINTS OF DISASSEMBLY M26HBAA

5. REMOVAL OF BRAKE DISC

Make the mating marks on the brake disc and front hub, and then separate the front hub and brake disc, if necessary.

Caution
Lock disc in vise and grip with copper or aluminum board.

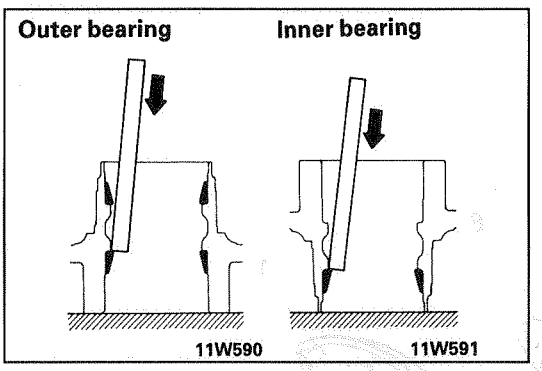

BEARING REPLACEMENT M26HDAJ

(1) Wipe off grease from the front hub interior.
(2) Drive out the inner and outer bearing outer races by tapping them uniformly.
(3) Apply the multipurpose grease to the outside surface of the new inner and outer bearing outer races.

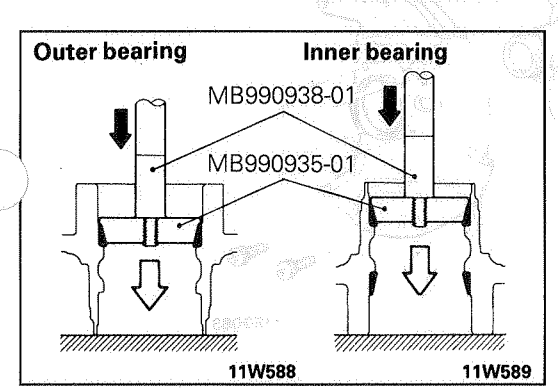

(4) Press-fit the inner and outer bearing outer races by using the special tools.

NOTE
The bearing inner race and bearing outer race should be replaced as an assembly.

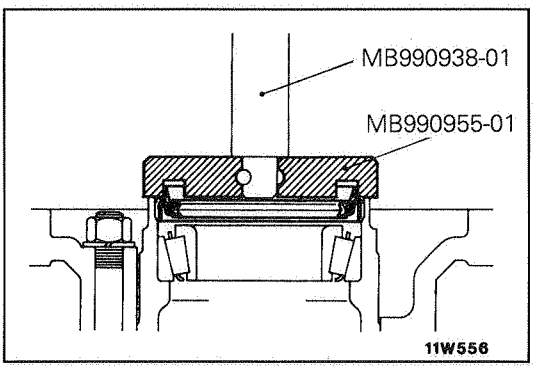

SERVICE POINTS OF REASSEMBLY M26HEABa

2. INSTALLATION OF OIL SEAL

(1) Apply the multipurpose grease to the oil seal lip and inside surface of the front hub.
(2) Apply the multipurpose grease to the inner bearing inner race and install the inner race into the front hub.
(3) Press-fit the new oil seal into the front hub by using the special tools, until it is flush with the front hub end face.

KNUCKLE

REMOVAL AND INSTALLATION

M26PA--

Pre-removal and post-installation Operation
- Removal and Installation of the Front Hub (Refer to P.26-11.)

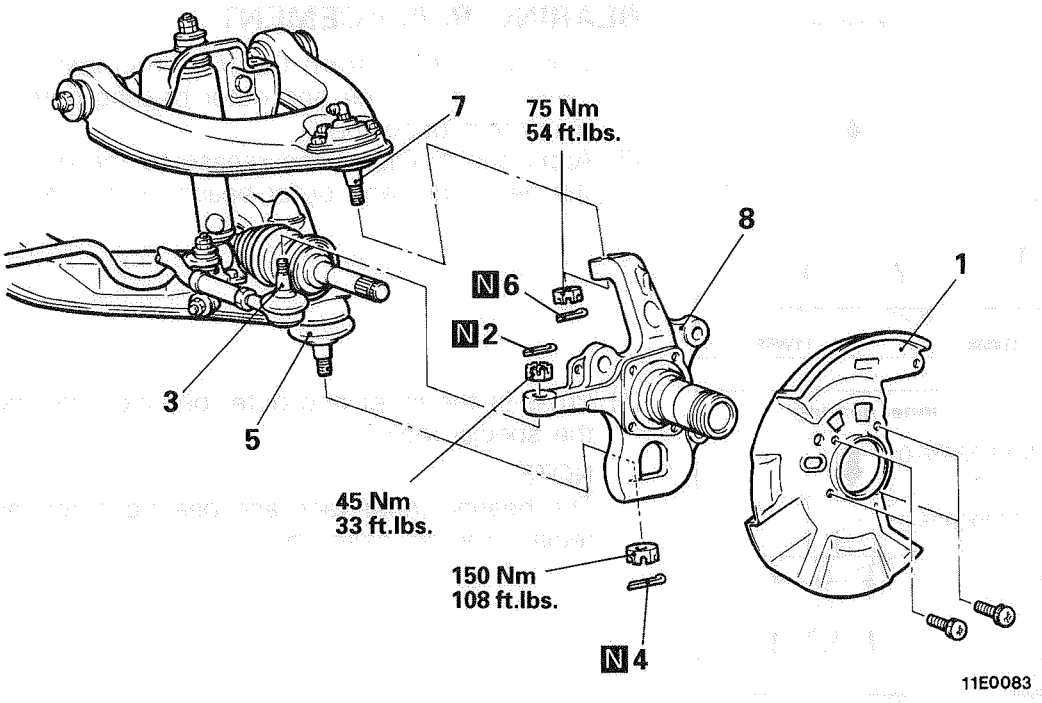

Removal steps

1. Dust cover
2. Cotter pin
3. ◆◆ Connection for tie rod assembly and knuckle
4. Cotter pin
5. ◆◆ Connection for lower ball joint and knuckle
6. Cotter pin
7. ◆◆ Connection for upper ball joint and knuckle
8. Knuckle

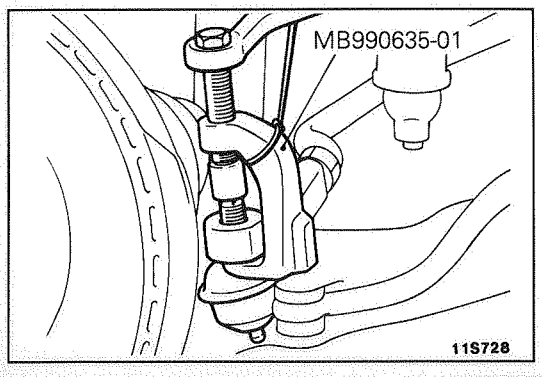

SERVICE POINTS OF REMOVAL

M26PBAO

3. DISCONNECTION OF TIE ROD ASSEMBLY AND KNUCKLE

Disconnect the tie rod from the knuckle by using the special tool.

Caution

1. **Use cord to bind the special tool closely so it won't become separated.**
2. **The nut should be loosened only, not removed.**

TSB Revision

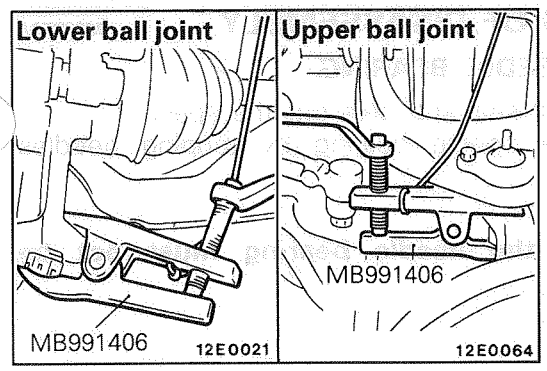

5. DISCONNECTION OF LOWER BALL JOINT AND KNUCKLE/7. UPPER BALL JOINT AND KNUCKLE

Caution

1. **Support the lower arm with a jack when removing the knuckle from the lower ball joint or the upper ball joint.**
2. **After the knuckle has been removed, lower the jack slowly.**
3. **Use cord to bind the special tool closely so it won't become separated.**
4. **The nut should be loosened only, not removed.**
5. **Insert the special tool securely.**

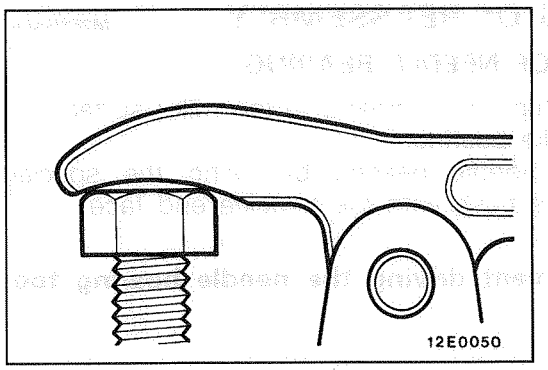

INSPECTION

M26PCAA

- Check the needle bearing for wear or damage.
- Check the knuckle for cracks or bends.
- Check the knuckle spindle for wear or pounding

DISASSEMBLY AND REASSEMBLY

M26PE--

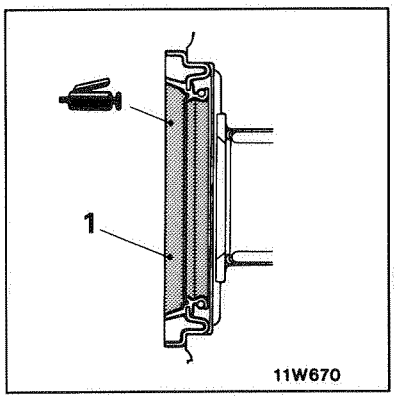

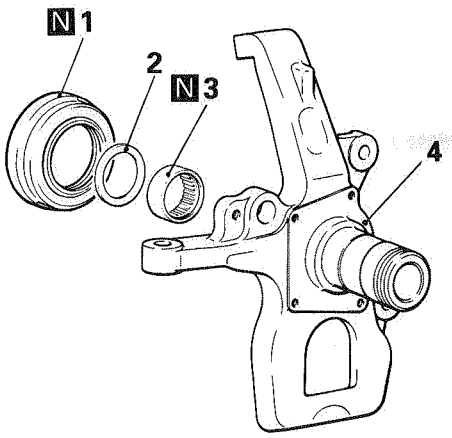

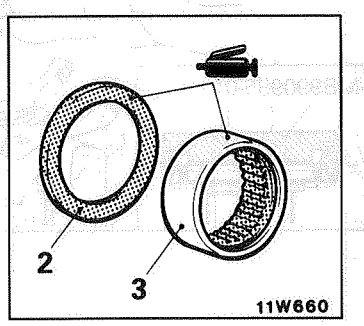

Disassembly steps

- ◆◆ 1. Oil seal
- ◆◆ 2. Spacer
- ◆◆ ◆◆ 3. Needle bearing
- 4. Knuckle

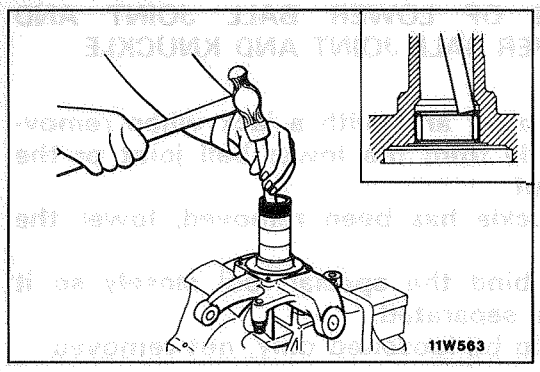

SERVICE POINTS OF DISASSEMBLY M26PFAA

3. REMOVAL OF NEEDLE BEARING

(1) Remove the oil seal and take out the spacer.
(2) Drive out the needle bearing by tapping needles uniformly.

Caution
Once removed, the needle bearing must not be reused.

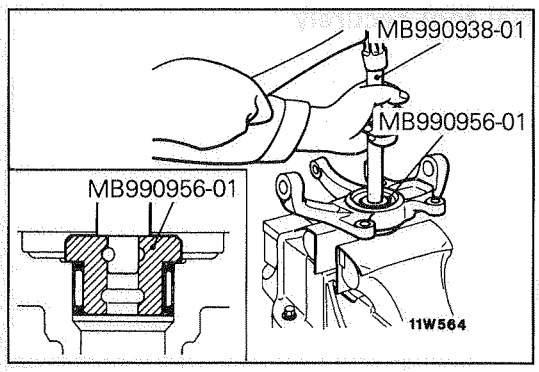

SERVICE POINTS OF REASSEMBLY M26PGABa

3. INSTALLATION OF NEEDLE BEARING

(1) Apply the multipurpose grease to the roller surface of the new needle bearing.
(2) Press-fit the needle bearing by using the special tools, until it is flush with the knuckle end face.

Caution
Use care to prevent driving the needle bearing too far in.

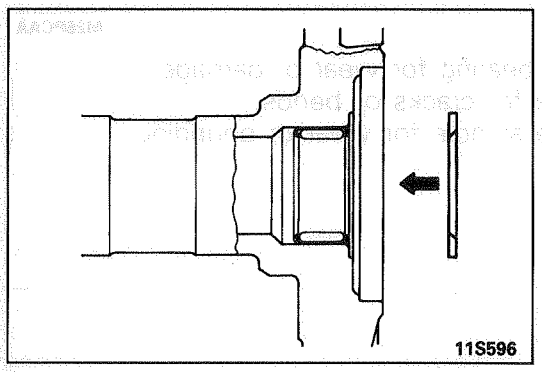

2. INSTALLATION OF SPACER

(1) Apply the multipurpose grease to the knuckle attaching surface of the spacer.
(2) Install the spacer to the knuckle with the chamfered side toward the center of vehicle.

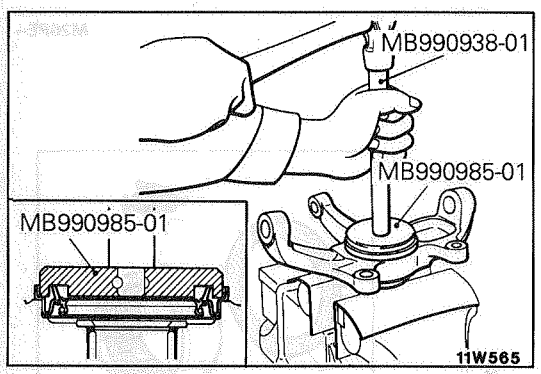

1. INSTALLATION OF OIL SEAL

(1) Press-fit the new oil seal by using the special tools, until it is flush with the knuckle end face.
(2) Pack the multipurpose grease in the oil seal inside and lip.

DRIVE SHAFT

REMOVAL AND INSTALLATION

E26QA--

Left drive shaft

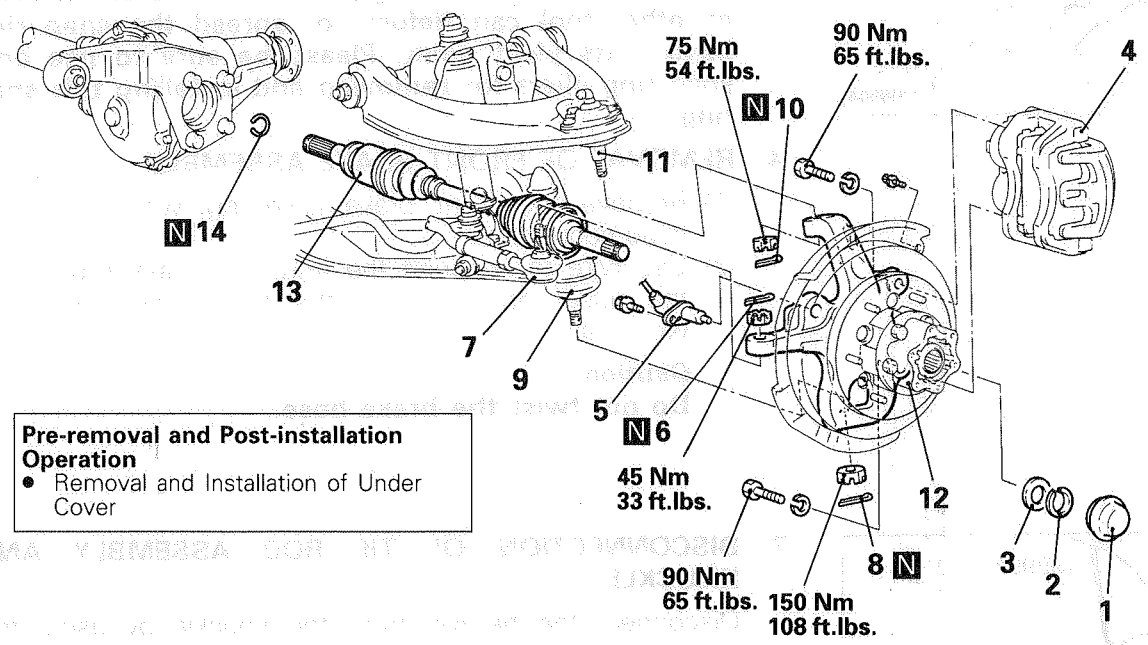

Pre-removal and Post-installation Operation
- Removal and Installation of Under Cover

Right drive shaft

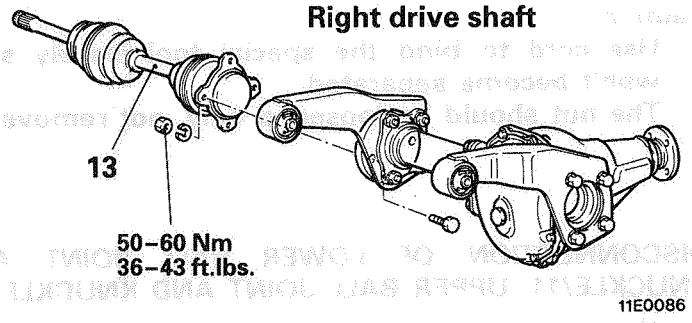

11E0086

11E0150

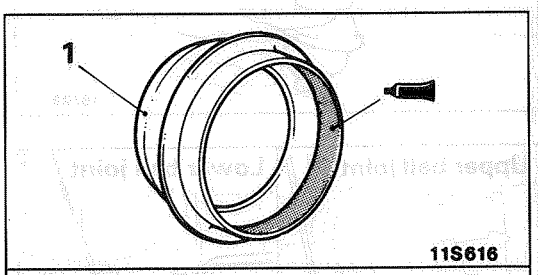

11S616

Sealant:
3M ATD Part No. 8661, No. 8663 or equivalent

Removal steps

◀▶ 1. Hub cap
2. Snap ring
◀▶ 3. Shim
4. Front brake assembly
◀▶ 5. Speed sensor <Vehicles with ABS> (Refer to GROUP 35 – Wheel Speed Sensor)
6. Cotter pin
7. Connection for tie rod assembly and knuckle
◀▶ 8. Cotter pin
◀▶ 9. Connection for lower ball joint and knuckle
10. Cotter pin
◀▶ 11. Connection for upper ball joint and knuckle
12. Front hub and knuckle assembly
◀▶ ◀▶ 13. Drive shaft
14. Circlip

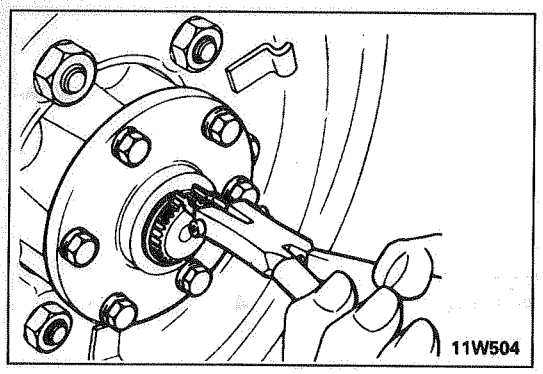

SERVICE POINTS OF REMOVAL M26QBAR

2. REMOVAL OF SNAP RING

Using a snap ring pliers, remove the snap ring from the drive shaft.

Caution
The proper tool for removing and installing the snap ring is a pair of snap ring pliers. Use of a screwdriver or other tool can deform or spread the snap ring beyond its yield point. Please be sure to use only snap ring pliers for removing and installing this snap ring.

4. REMOVAL OF FRONT BRAKE ASSEMBLY

(1) Remove the front brake assembly with the brake hose connected.
(2) Use wire to suspend the front brake assembly from the upper arm so that the front brake assembly won't fall.

Caution
Do not twist the brake hose.

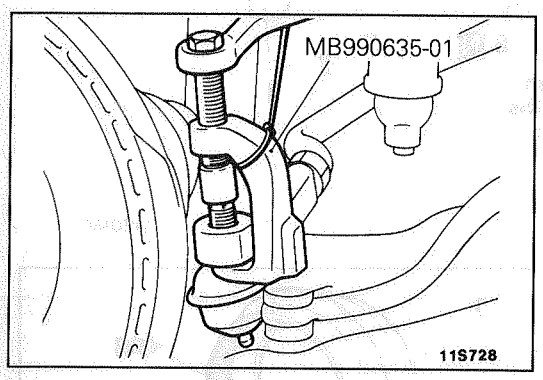

7. DISCONNECTION OF TIE ROD ASSEMBLY AND KNUCKLE

Disconnect the tie rod from the knuckle by using the special tool.

Caution
1. **Use cord to bind the special tool closely so it won't become separated.**
2. **The nut should be loosened only, not removed.**

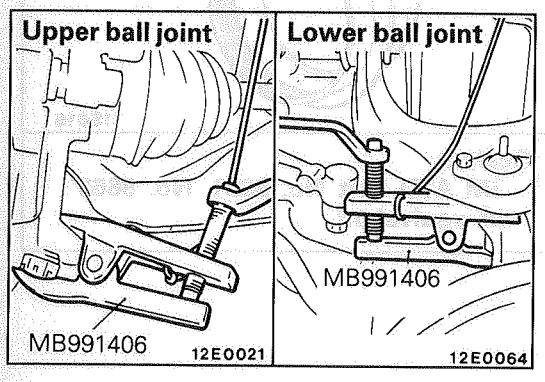

9. DISCONNECTION OF LOWER BALL JOINT AND KNUCKLE/11. UPPER BALL JOINT AND KNUCKLE

Caution
1. **Support the lower arm with a jack when removing the knuckle from the lower ball joint or the upper ball joint.**
2. **After the knuckle has been removed, lower the jack slowly.**
3. **Use cord to bind the special tool closely so it won't become separated.**
4. **The nut should be loosened only, not removed.**
5. **Insert the special tool securely.**

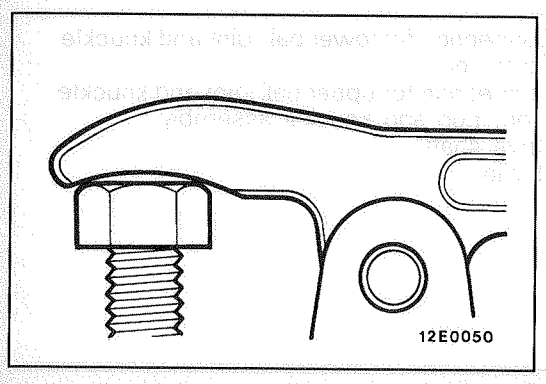

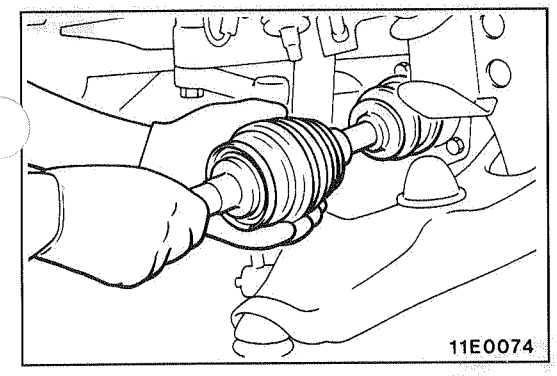

13. REMOVAL OF DRIVE SHAFT

FOR LEFT DRIVE SHAFT
Pull the drive shaft out from the differential carrier.

Caution
When pulling the drive shaft out from the differential carrier, be careful that the spline part of the drive shaft does not damage the oil seal.

INSPECTION M26QCAF

- Check ball joint for operating condition and excessive looseness.
- Check the boot for damage or wear.
- Check the splines for wear or damage.

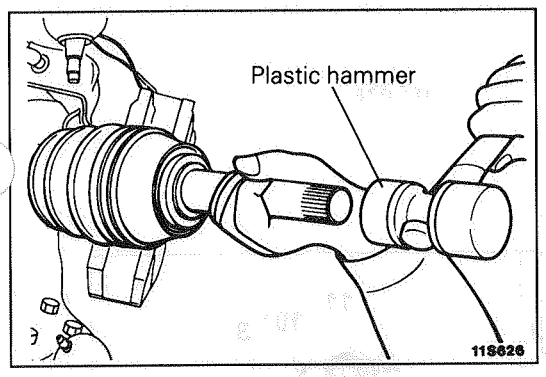

SERVICE POINTS OF INSTALLATION M26QDAP

13. INSTALLATION OF DRIVE SHAFT

FOR LEFT DRIVE SHAFT
Drive the drive shaft into the differential carrier with a plastic hammer.

Caution
Be careful not to damage the lip of the oil seal. Replace the circlip which is attached to the B.J. side spline part with a new one.

DISASSEMBLY AND REASSEMBLY

M26QE--

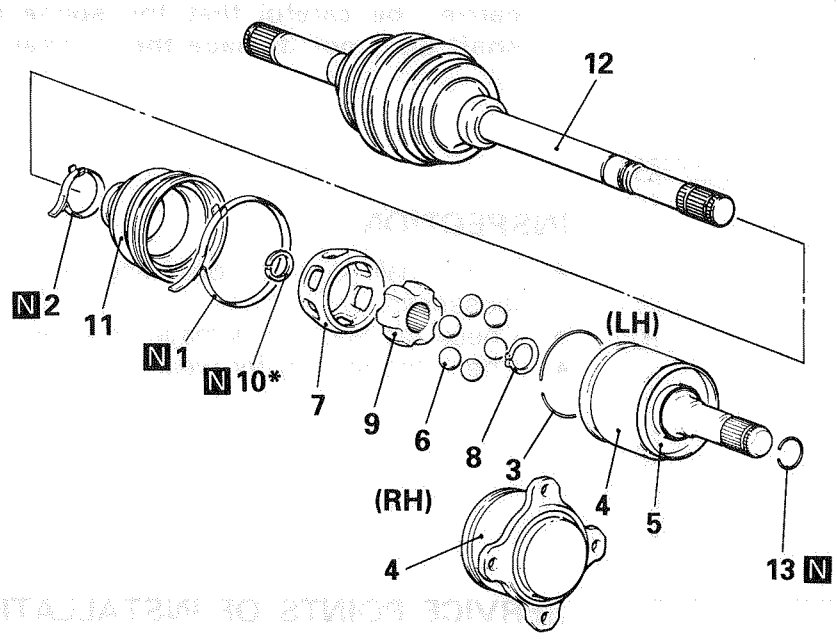

11E0078

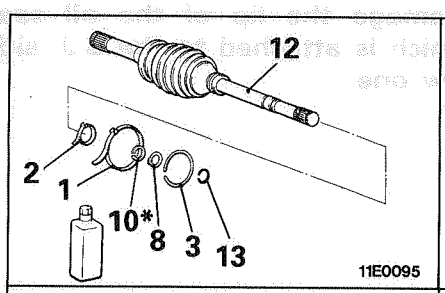

11E0095

B.J. repair kit LH

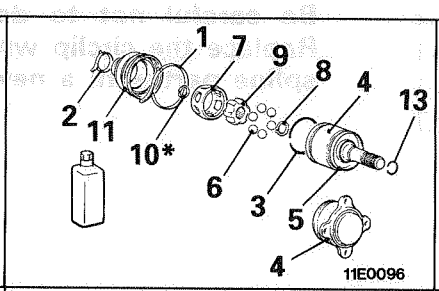

11E0096

D.O.J. repair kit

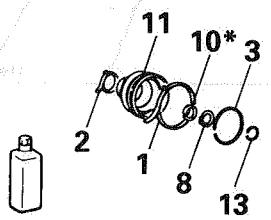

11W673

Boot repair kit (D.O.J.)

Disassembly steps

1. D.O.J. boot band (large)
2. D.O.J. boot band (small)
3. Circlip
4. D.O.J. outer race
5. Dust cover
6. Ball
7. D.O.J. cage
8. Snap ring
9. D.O.J. inner race
10. Circlip
11. D.O.J boot
12. B.J. assembly
13. Circlip

NOTE
*: M/T

Reassembly steps

12. B.J. assembly
2. D.O.J. boot band (small)
11. D.O.J. boot
1. D.O.J. boot band (large)
7. D.O.J. cage
10. Circlip
9. D.O.J. inner race
8. Snap ring
6. Ball
4. D.O.J. outer race
3. Circlip
13. Circlip
5. Dust cover

TSB Revision

LUBRICATION POINTS

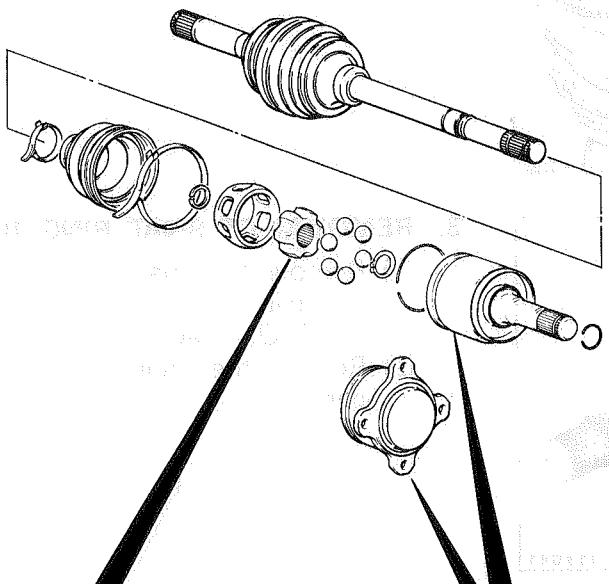

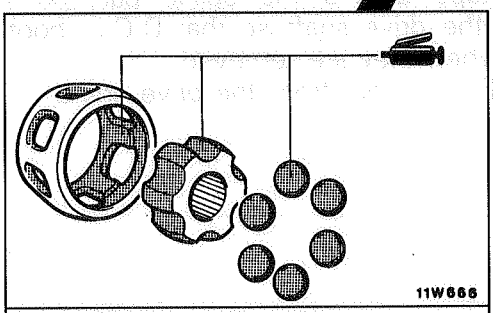

Grease: Repair kit grease

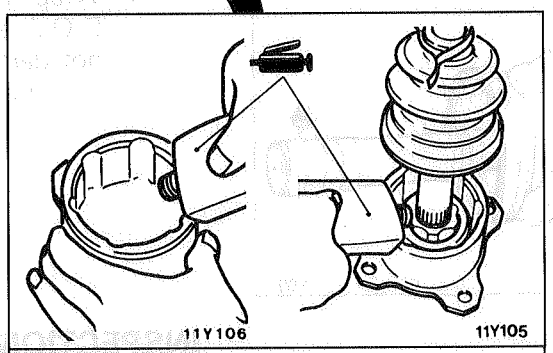

Grease: Repair kit grease
100 g (3.5 oz.)

NOTE
The grease in the repair kit should be divided in half for use, respectively, at the joint and inside the boot.

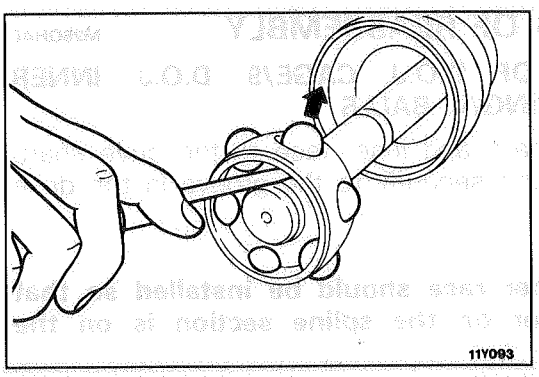

SERVICE POINTS OF DISASSEMBLY M26QFAF

6. REMOVAL OF BALLS

Remove the balls from the D.O.J. cage.

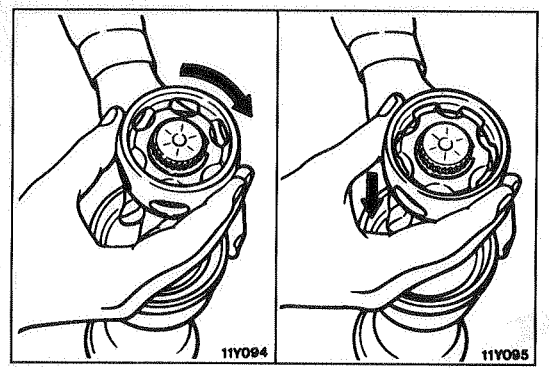

7. REMOVAL OF D.O.J. CAGE

Remove the D.O.J. cage from the D.O.J. inner race in the direction of the B.J.

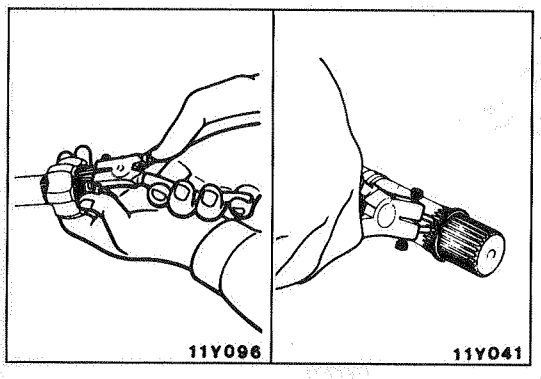

8. REMOVAL OF SNAP RING/10. CIRCLIP

(1) Remove the snap ring from the drive shaft with snap ring pliers, and then withdraw the D.O.J. inner race and D.O.J. cage from the drive shaft.
(2) Remove the circlip from the drive shaft with snap ring pliers.

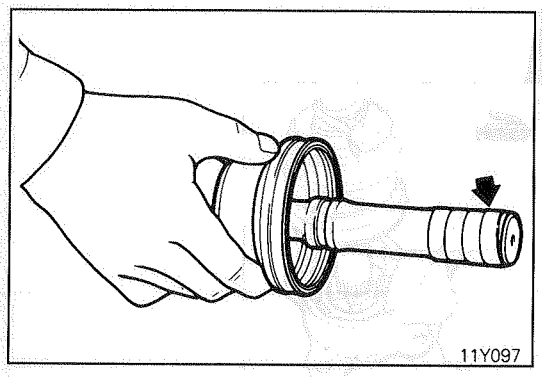

11. REMOVAL OF D.O.J. BOOT

(1) Wrap plastic tape around the spline part on the D.O.J. side of the drive shaft so that D.O.J. boot is not damaged when they are removed.
(2) Withdraw the D.O.J. boot from the drive shaft.

INSPECTION M26QGAB

- Check the drive shaft for bending or wear.
- Check the B.J. for entry of water, foreign matter and rust.
- Check the D.O.J. cage, D.O.J. inner race and ball for rust, wear and damage.
- Check the circlip for damage or deformation.
- Check the D.O.J. outer race for wear or damage.

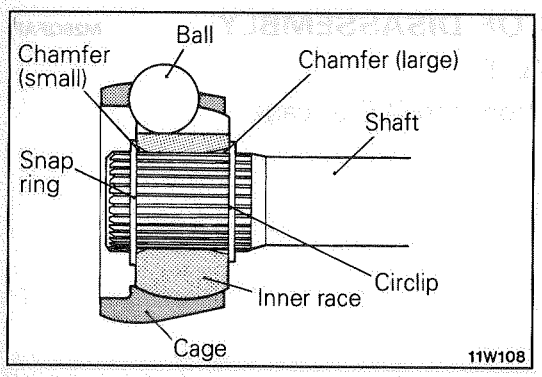

SERVICE POINTS OF REASSEMBLY M26QHAC

7. INSTALLATION OF D.O.J. CAGE/9. D.O.J. INNER RACE/8. SNAP RING/6. BALLS

Install the cage, balls and inner race to the drive shaft, and fit the snap ring securely to the groove in the drive shaft.

Caution
For M/T, the inner race should be installed so that the large chamfer on the spline section is on the drive shaft side.

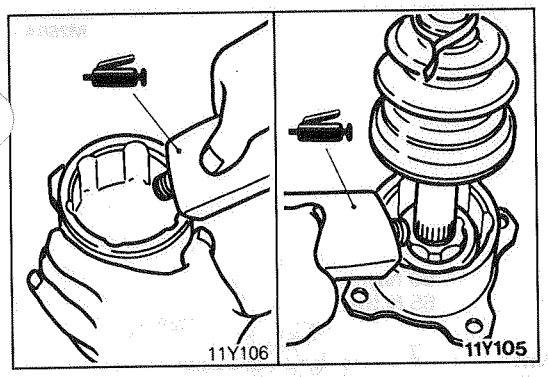

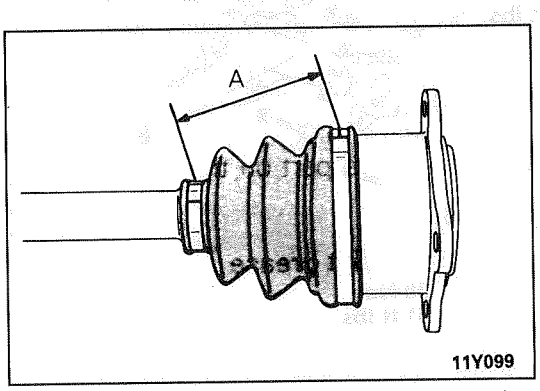

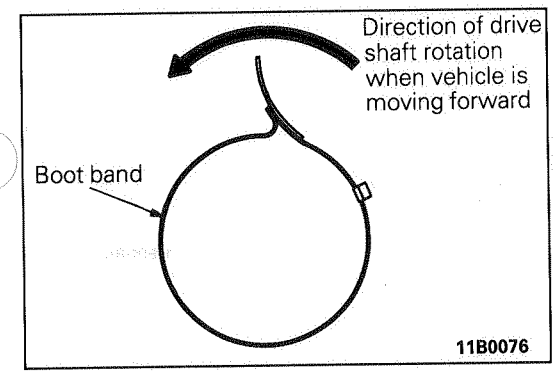

4. INSTALLATION OF D.O.J. OUTER RACE

(1) Fill the inside of the D.O.J. outer race and D.O.J. boot with the specified grease.

Specified grease: Repair kit grease 100g (3.5 oz.)

NOTE
The grease in the repair kit should be divided in half for use, respectively, at the joint and inside the boot.

Caution
The drive shaft joint use special grease. Do not mix old and new or different types of grease.

(2) Install the circlip onto the D.O.J. outer race. Place the D.O.J. boot over the D.O.J. outer race, and then use boot band (small) to secure the boot.

Caution
Do not secure the boot band (large).

(3) Secure the driveshaft, and then move the D.O.J. outer race until it is at the position where the D.O.J. boot assembly dimension is the standard value.

Standard value (A): 77–83 mm (3.03–3.27 in.)

(4) Remove a part of the D.O.J. boot from the D.O.J. outer race and release the air within the boot.

(5) Secure the boot band (large) on D.O.J. boot.

Caution
Be sure that the installation direction of the boot bands is correct.

INNER SHAFT

M26RA--

REMOVAL AND INSTALLATION

Pre-removal and Post-installation Operation
- Removal and Installation of Under Cover

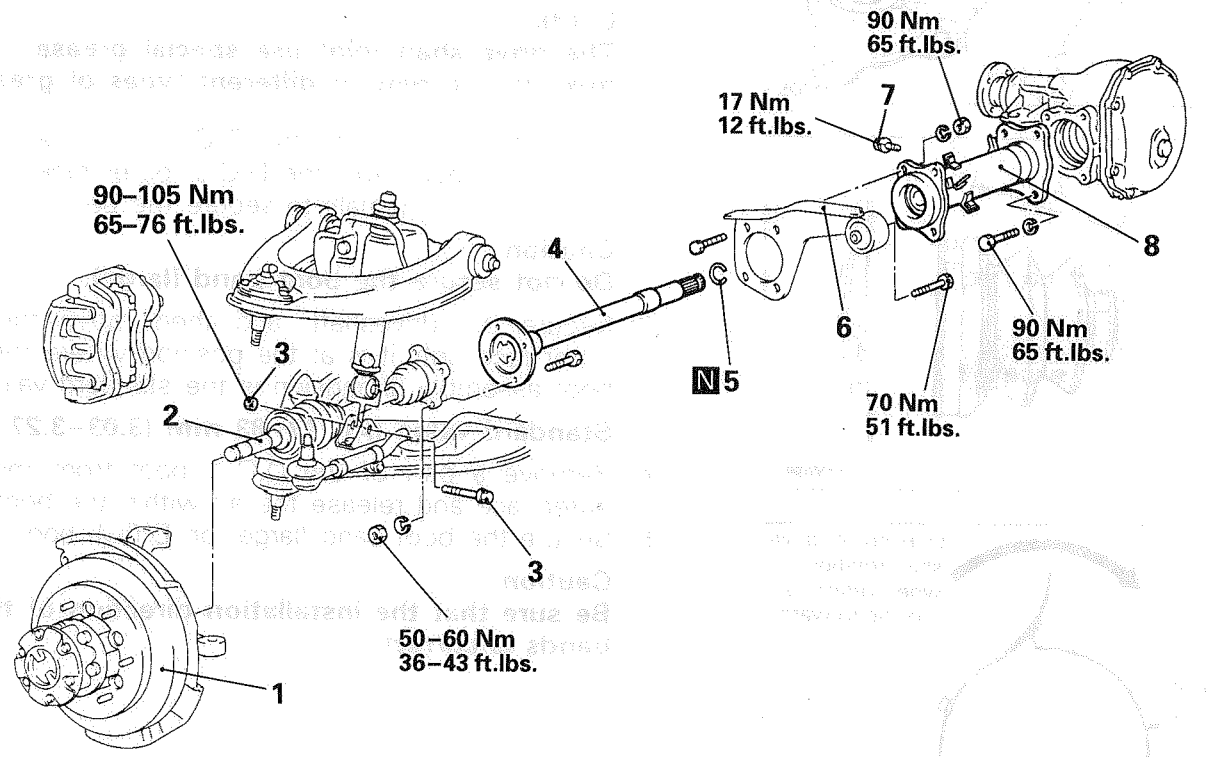

Removal steps

1. Front hub and knuckle assembly (Refer to P.26-11.)
2. Drive shaft assembly (R.H.) (Refer to P.26-19.)
3. Shock absorber lower mounting bolt and nut
4. Inner shaft
5. Circlip
6. Differential mounting bracket (R.H.)
7. Actuator mounting bolt
8. Housing tube

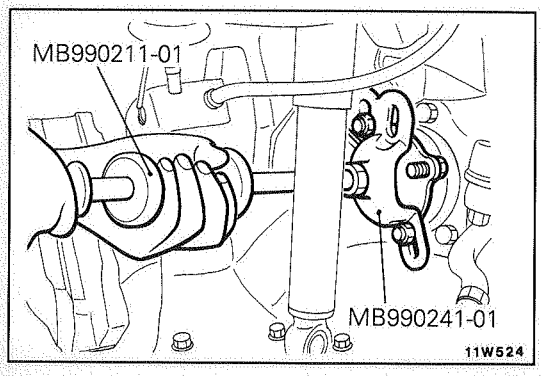

SERVICE POINTS OF REMOVAL

M26RBAF

4. REMOVAL OF INNER SHAFT

Attach the special tools to the flange of the shaft, and pull the inner shaft out from the front differential carrier.

Caution
When pulling the inner shaft out from the front differential carrier, be careful that the spline part of the inner shaft does not damage the oil seal.

TSB Revision

INSPECTION M26RCAA

- Check the inner shaft for bend.
- Check the bearing for wear or discoloration.
- Check the housing tube for cracks.
- Check the dust seal for cracks or damage.

SERVICE POINTS OF INSTALLATION M26RDAGa

4. INSTALLATION OF INNER SHAFT

Drive the inner shaft into the front differential carrier by using the special tools (MB990241-01 and MB990211-01).

Caution
Be careful not to damage the lip of the dust seal and oil seal.

DISASSEMBLY AND REASSEMBLY M26RE--

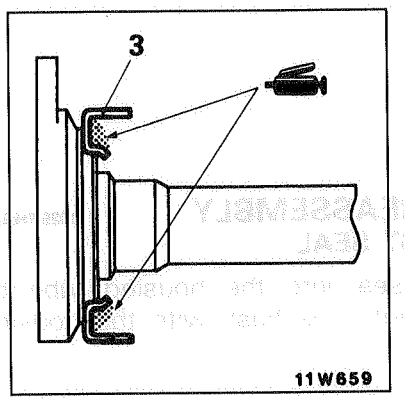



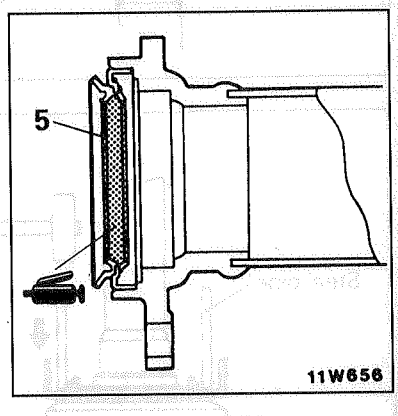

Disassembly steps

1. Inner shaft
2. Bearing
3. Dust cover
4. Housing tube
5. Dust seal

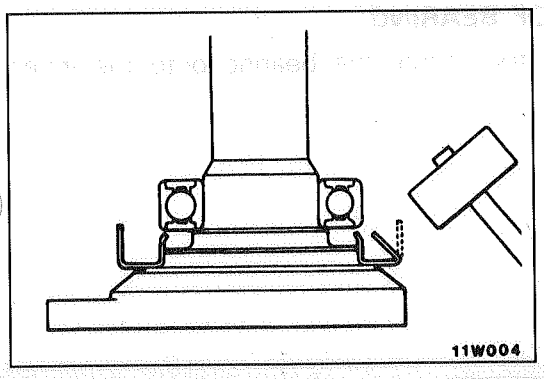

SERVICE POINTS OF DISASSEMBLY M26RFAF

2. REMOVAL OF BEARING

(1) Bend the outside periphery of dust cover inward with a hammer.

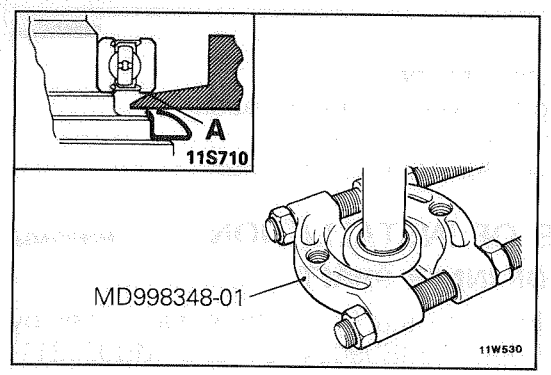

(2) After the special tool has been installed as shown, tighten the nut of the special tool until the portion "A" of the special tool touches the bearing outer race.

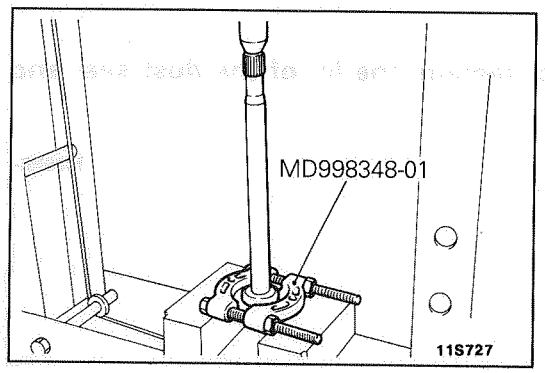

(3) Press out the inner shaft from the bearing.

Caution
Do not allow the inner shaft to drop.

SERVICE POINTS OF REASSEMBLY M26RHADb

5. INSTALLATION OF DUST SEAL

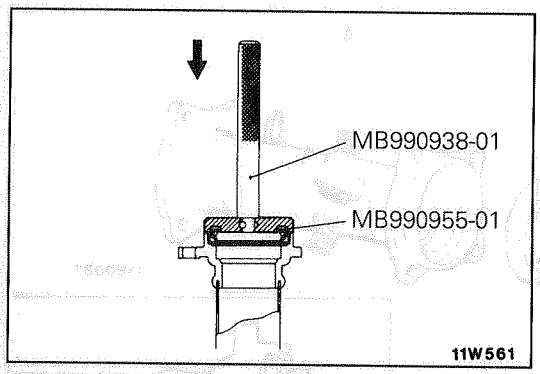

Press-fit the new dust seal into the housing tube by using the special tools, until it is flush with the housing tube end face.

3. INSTALLATION OF DUST COVER

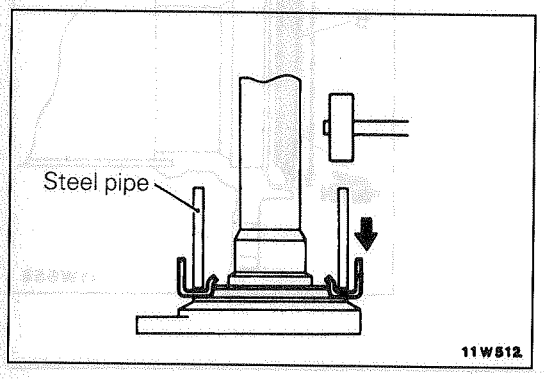

Using a steel pipe, force a new dust cover onto the inner shaft.

Steel pipe	mm (in.)
Overall length	50 (1.7)
Outside diameter	75 (3.0)
Wall thickness	4 (.2)

2. INSTALLATION OF BEARING

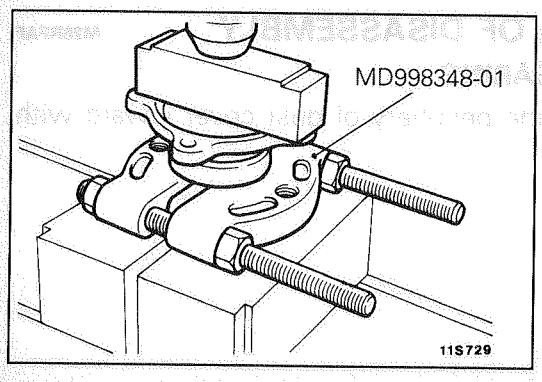

Using the special tool, force the bearing onto the inner shaft.

SOLENOID VALVE AND VACUUM HOSE

REMOVAL AND INSTALLATION

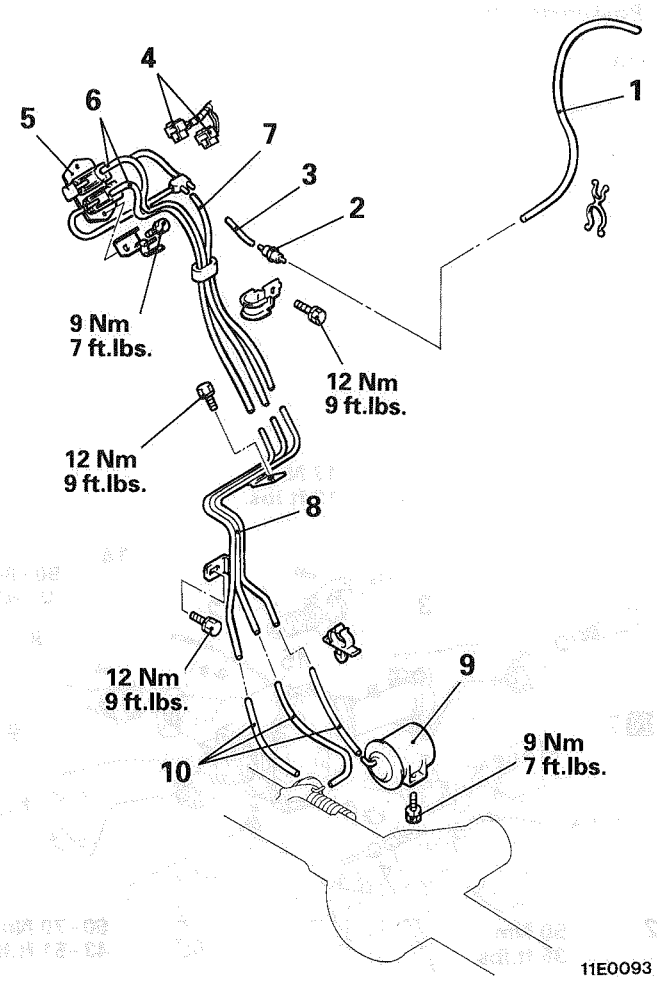

Removal steps

1. Vacuum hose
2. Check valve
3. Vacuum hose
4. Solenoid valve connector
- ◆◆ 5. Solenoid valve assembly
- ◆◆ 6. Vacuum hose
7. Vacuum hose
8. Vacuum pipe assembly
9. Vacuum tank
- ◆◆ 10. Vacuum hose

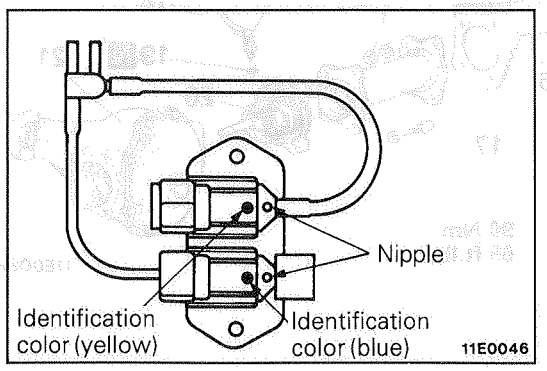

SERVICE POINTS OF INSTALLATION

10. INSTALLATION OF VACUUM HOSE

Install the vacuum hose so that the identification colors match those of the pipe assembly and the actuator.
Furthermore, there are no identification colors on the vacuum hose at the vacuum tank connection.

6. INSTALLATION OF VACUUM HOSE/5. SOLENOID VALVE ASSEMBLY

Install the vacuum hose and solenoid valve assembly so that the colors of the identification marks are matched.

DIFFERENTIAL CARRIER AND FREE-WHEELING CLUTCH M26VA--

REMOVAL AND INSTALLATION

Pre-removal and Post-installation Operations
- Removal and Installation of Under Cover
- Draining and Supplying of Gear Oil (Refer to P.26-8.)

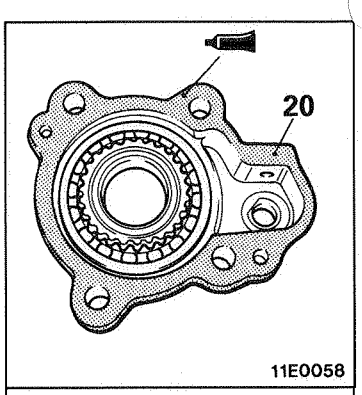

Sealant: 3M ATD Part No. 8663, 8661 or equivalent

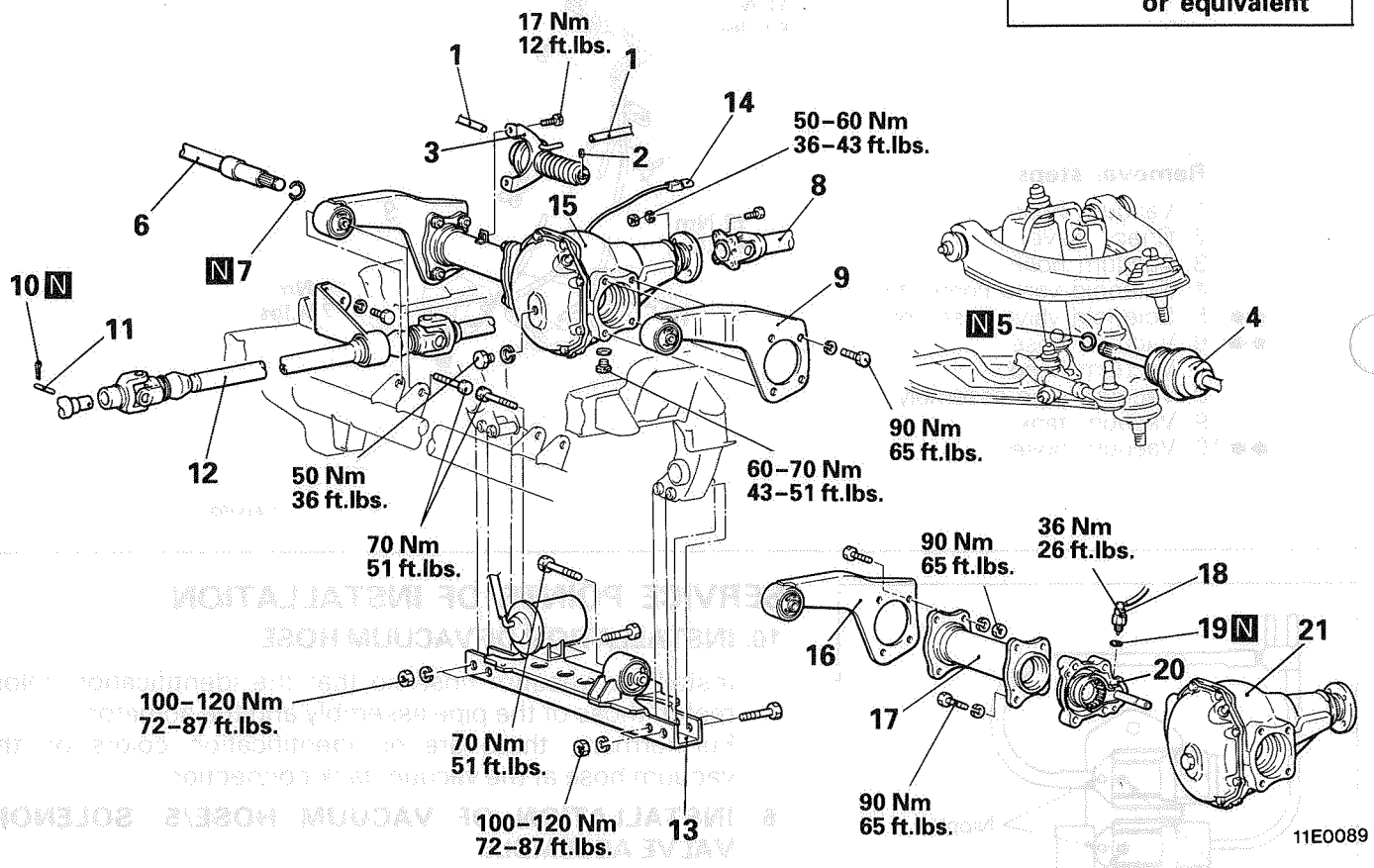

Removal steps

- ◆◆ 1. Vacuum hose
- 2. Pin
- 3. Actuator assembly
- 4. Drive shaft (Refer to P.26-19.)
- 5. Circlip
- 6. Inner shaft (Refer to P.26-26.)
- 7. Circlip
- ◆◆ ◆◆ 8. Connection for front propeller shaft
- 9. Differential mounting bracket (L.H.)
- 10. Cotter pin
- 11. Share pin
- 12. Front shaft assembly
  } <M/T>
- 13. Front suspension crossmember
- 14. Free-wheeling engage switch connector
- 15. Front differential carrier assembly, housing tube and differential mounting bracket (R.H.)
- 16. Differential mounting bracket (R.H.)
- 17. Housing tube
- 18. Free-wheeling engage switch
- 19. Gasket
- ◆◆ 20. Free-wheeling clutch assembly
- 21. Front differential carrier assembly

TSB Revision

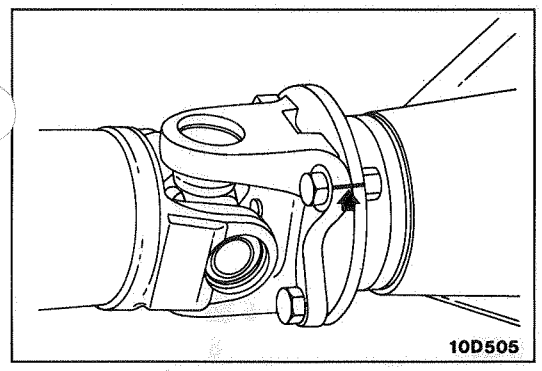

SERVICE POINTS OF REMOVAL M26VBAE

8. REMOVAL OF FRONT PROPELLER SHAFT

Install the front propeller shaft so that the mating marks of the flange yoke and the differential carrier companion flange are aligned.

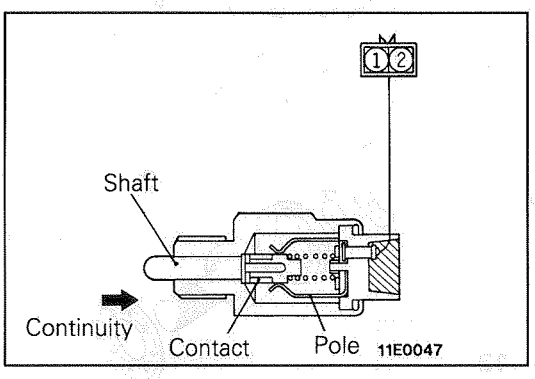

INSPECTION M26WCAC

FREE-WHEEL ENGAGE SWITCH

The switch is normal if there is continuity when the shaft is pushed in, and no continuity when the shaft is released.

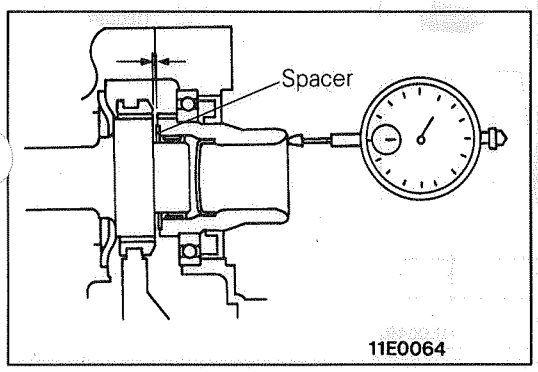

SERVICE POINTS OF INSTALLATION M26VDAD

20. INSTALLATION OF FREE-WHEELING CLUTCH ASSEMBLY

(1) After installing the free-wheeling clutch assembly, select a spacer so that the clutch gear play (bearing looseness) is within the standard value.

Standard value: 0.05–0.40mm (.0020–.0160 in.)

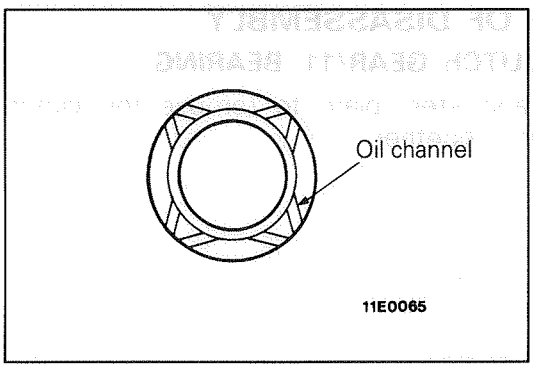

(2) Install the spacer so that the oil channel side is on the differential gear side.

8. INSTALLATION OF FRONT PROPELLER SHAFT

Install the front propeller shaft so that the mating marks of the flange yoke and the differential carrier companion flange are aligned.

1. INSTALLATION OF VACUUM HOSE

Install the vacuum hoses so that they match the identification colors of the actuator assembly nipple.

FREE-WHEELING CLUTCH

DISASSEMBLY AND REASSEMBLY

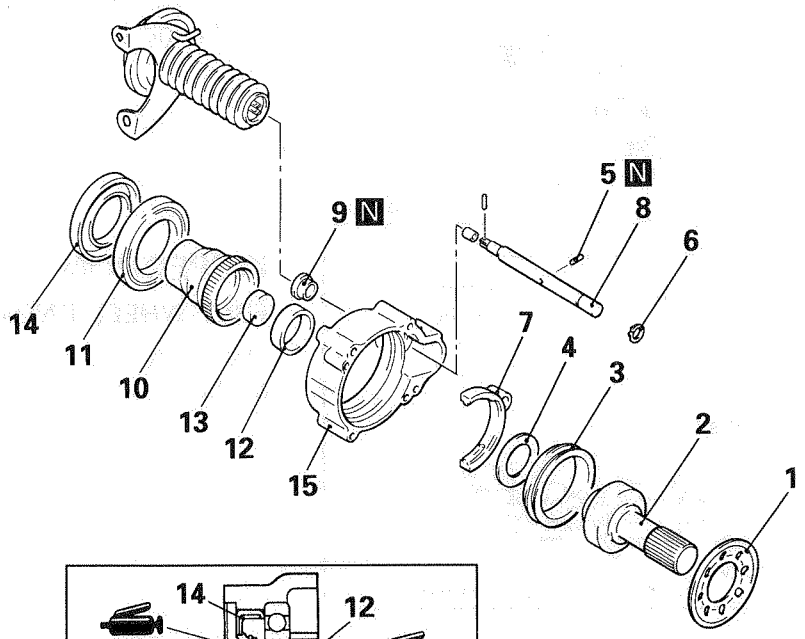

11E0094

Removal steps

- ◆◆ 1. Thrust bushing
- 2. Main shaft
- 3. Clutch sleeve
- 4. Spacer
- ◆◆ 5. Spring pin
- 6. Snap ring
- 7. Shift fork
- 8. Shift rod
- ◆◆ 9. Oil seal
- ◆◆ ◆◆ 10. Clutch gear
- ◆◆ ◆◆ 11. Bearing
- ◆◆ 12. Needle bearing
- ◆◆ 13. Cap
- ◆◆ 14. Oil seal
- 15. Clutch housing

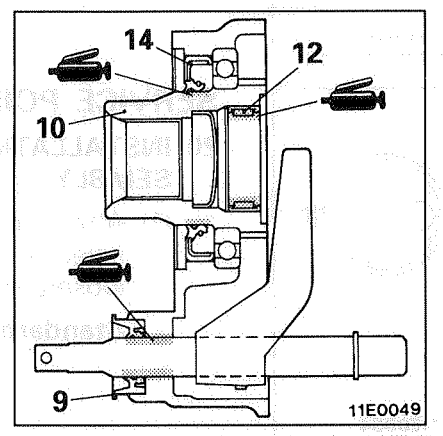

11E0049

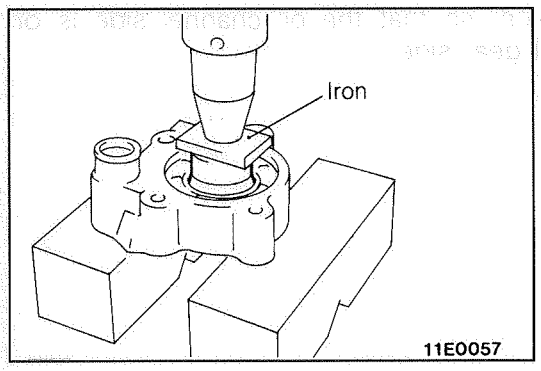

11E0057

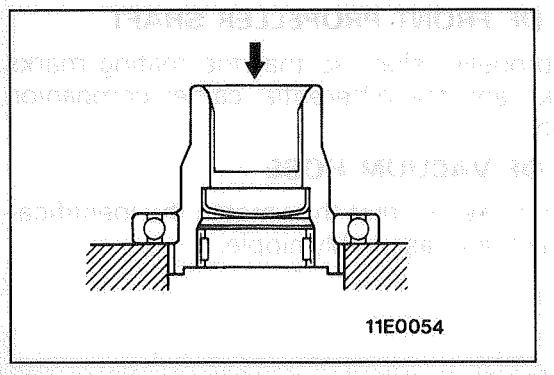

11E0054

SERVICE POINTS OF DISASSEMBLY

10. REMOVAL OF CLUTCH GEAR/11. BEARING

(1) Use a press and steel plate to remove the clutch gear and bearing together.

(2) Use a press to hold the supports against the bearing inner race, and separate the clutch gear and bearing.

TSB Revision

SERVICE POINTS OF REASSEMBLY

14. INSTALLATION OF OIL SEAL

Use the special tool to tap the oil seal.

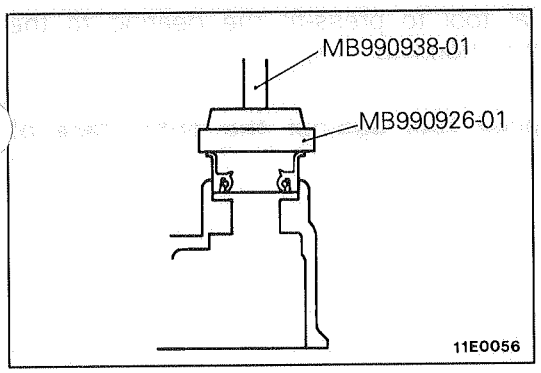

13. INSTALLATION OF CAP

Use an iron bar with an outside diameter of approximately 30–35 mm (1.18–1.38 in.) to push in the sealing cap.

Caution
Be careful not to make a dent in the curved surface of the cylinder cap.

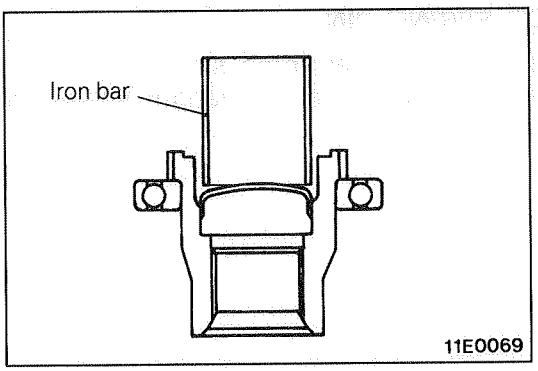

12. INSTALLATION OF NEEDLE BEARING

Use the special tools to press-fit the clutch cap until it is flush with surface A of the clutch gear.

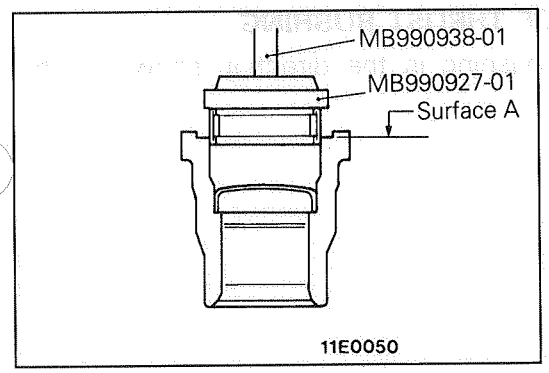

11. INSTALLATION OF BEARING/10. CLUTCH GEAR/9. OIL SEAL

(1) Use the special tool to press-fit the bearing to the shoulder of the clutch gear.

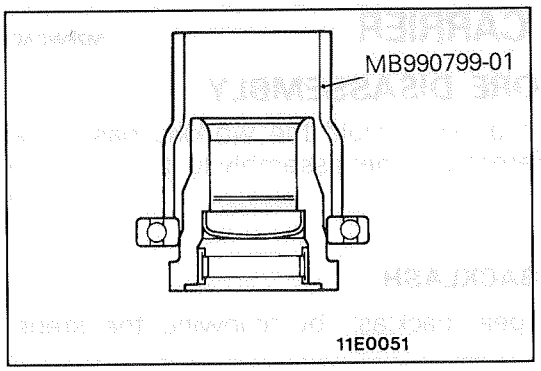

(2) Use the special tool to tap the oil seal until it is flush with the clutch housing.

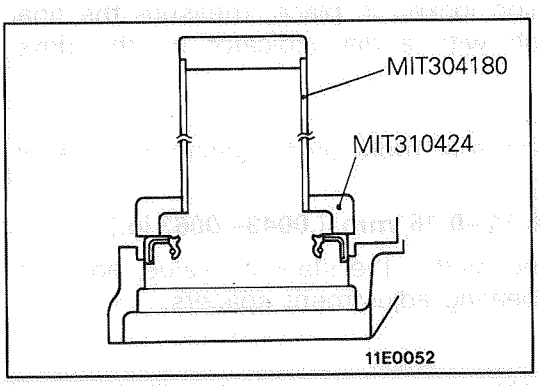

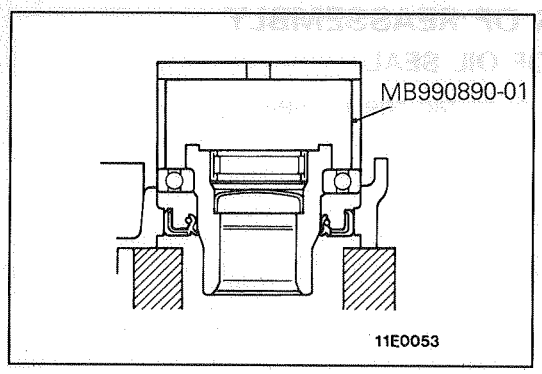

(3) Use the special tool to press-fit the bearing to the side of the clutch housing.

Caution
Place the special tool against the outer race of the bearing.

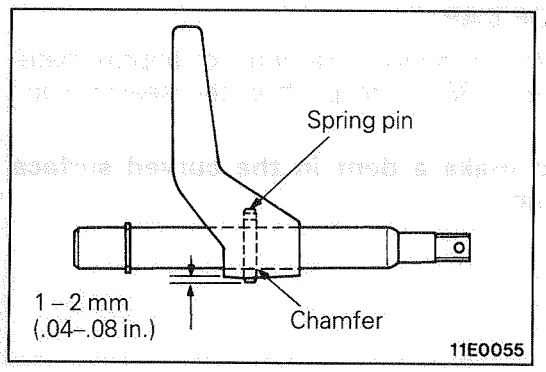

5. INSTALLATION OF SPRING PIN

Tap the spring pin from the chamfered side of the shift rod until the projection length is at the length shown in the illustration.

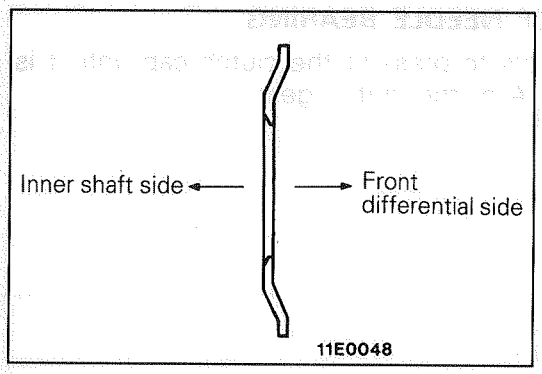

1. INSTALLATION OF THRUST BUSHING

Install the thrust bushing in the direction shown in the illustration.

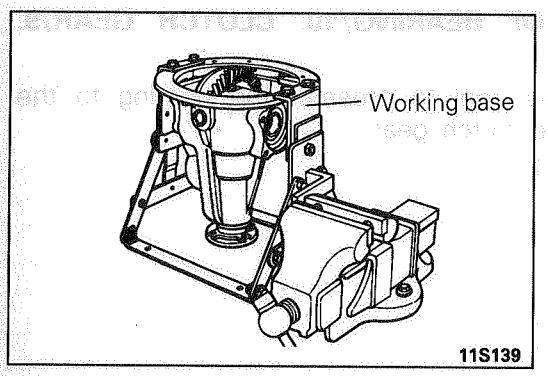

DIFFERENTIAL CARRIER M26WCAC

INSPECTION BEFORE DISASSEMBLY

Remove the cover and gasket. Hold the working base in a vise, and install the differential carrier assembly to it.

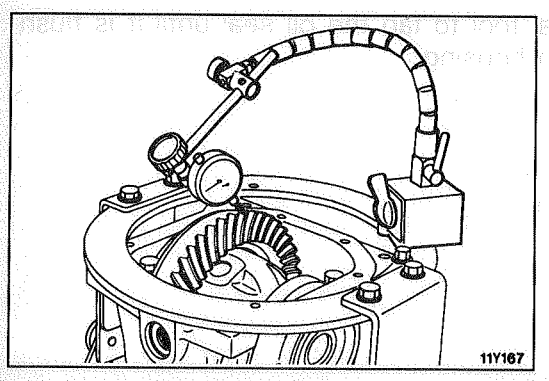

FINAL DRIVE GEAR BACKLASH

Check the final drive gear backlash by following the steps below.

(1) With the drive pinion locked in place, measure the final drive gear backlash with a dial indicator on the drive gear.

NOTE
Measure at four points or more on the circumference of the drive gear.

Standard value: 0.11–0.16 mm (.0043–.0063 in.)

(2) If the backlash is not within the standard value, adjust it by using the side bearing adjustment spacers.

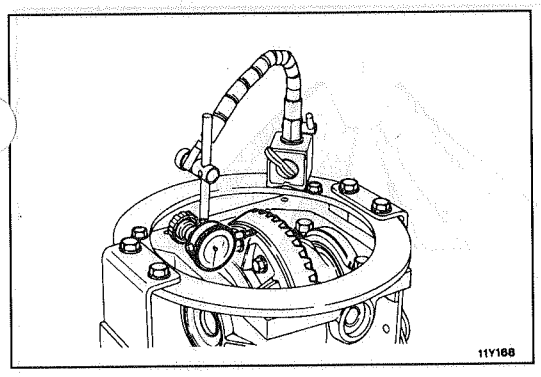

DRIVE GEAR RUNOUT

Check the drive gear runout by following the steps below.

(1) Measure the drive gear runout at the shoulder on the reverse side of the drive gear.

Limit: 0.05 mm (.0020 in.)

(2) If the runout exceeds the limit, check for improper tightening of the drive gear and differential case.

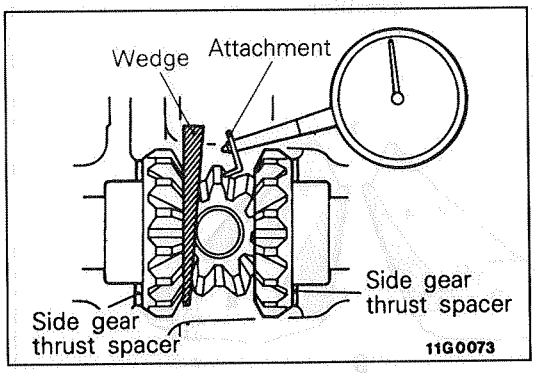

DIFFERENTIAL GEAR BACKLASH

Check the differential gear backlash by following the steps below.

(1) While locking the side gear with the wedge, measure the differential gear backlash with a dial indicator on the pinion gear.

NOTE
The measurement should be made for both pinion gears individually.

Standard value: 0–0.076 mm (0–.0030 in.)
Limit: 0.2 mm (.079 in.)

(2) If the backlash exceeds the limit, adjust by using the side gear thrust spacers.

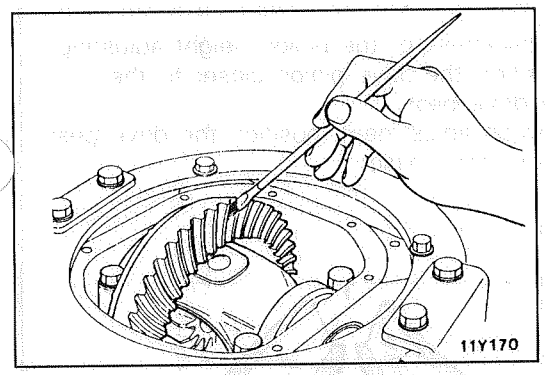

FINAL DRIVE GEAR TOOTH CONTACT

Check the final drive gear tooth contact by following the steps below.

(1) Apply a thin, uniform coat of machine blue to both surfaces of the drive gear teeth.

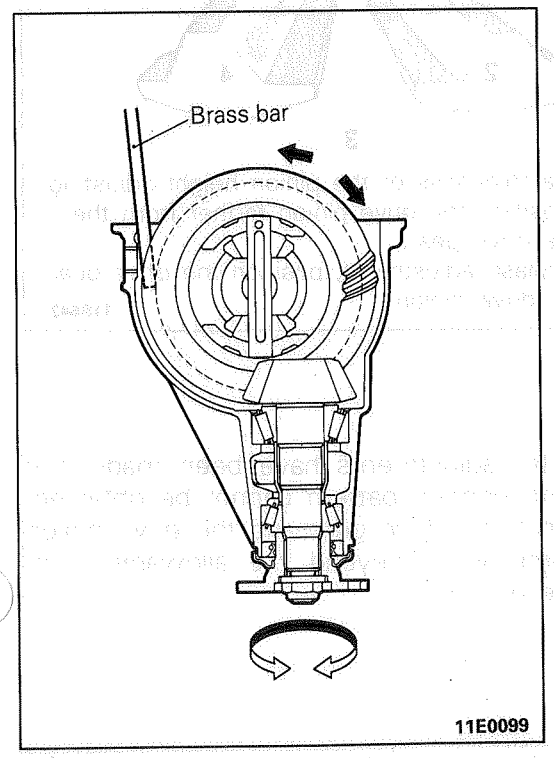

(2) Insert a brass rod between the differential carrier and the differential case, and then rotate the companion flange by hand (once in the normal direction, and then once in the reverse direction) while applying a load to the drive gear, so that the revolution torque [approximately 2.5–3.0 Nm (28–33 in.lbs.)] is applied to the drive pinion.

Caution
If the drive gear is rotated too much, the tooth contact pattern will become unclear and difficult to check.

(3) Check the tooth-contact condition of the drive gear and drive pinion.

Standard tooth contact pattern

1 Narrow tooth side
2 Drive-side tooth surface (the side applying power during forward movement)
3 Wide tooth side
4 Coast-side tooth surface (the side applying power during reverse movement)

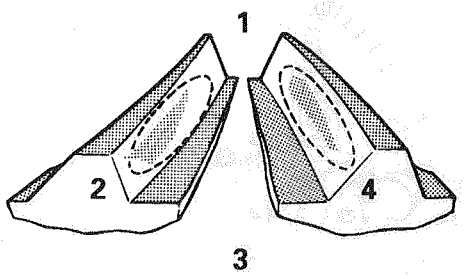

Problem	Solution

Tooth contact pattern resulting from excessive pinion height

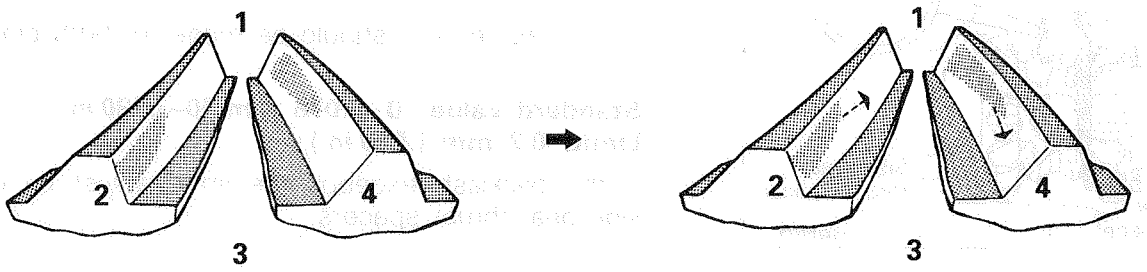

The drive pinion is positioned too far from the center of the drive gear.

Increase the thickness of the pinion height adjusting shim, and position the drive pinion closer to the center of the drive gear.
Also, for backlash adjustment, position the drive gear farther from the drive pinion.

Tooth contact pattern resulting from insufficient pinion height

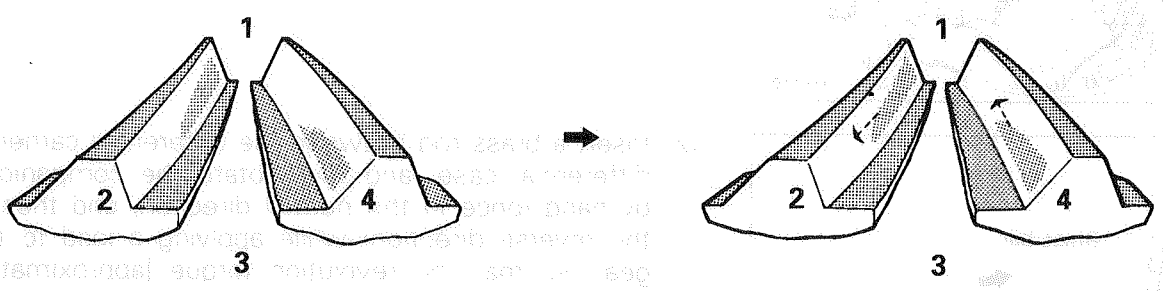

The drive pinion is positioned too close to the center of the drive gear.

Decrease the thickness of the pinion height adjusting shim, and position the drive pinion farther from the center of the drive gear.
Also, for backlash adjustment, position the drive gear closer to the drive pinion.

11S642

NOTE
Checking the tooth contact pattern is the way to confirm that the adjustments of the pinion height and backlash have been done properly. Continue to adjust the pinion height and backlash until the tooth contact pattern resembles the standard pattern.

If, even after adjustments have been made, the correct tooth contact pattern cannot be obtained, it means that the drive gear and the drive pinion have become worn beyond the allowable limit. Replace the gear set.

DISASSEMBLY

M26VE--

Inspection before Disassembly
- Final Drive Gear Backlash
- Drive Gear Runout
- Differential Gear Backlash
- Final Drive Gear Tooth Contact

} Refer to P.26-34.

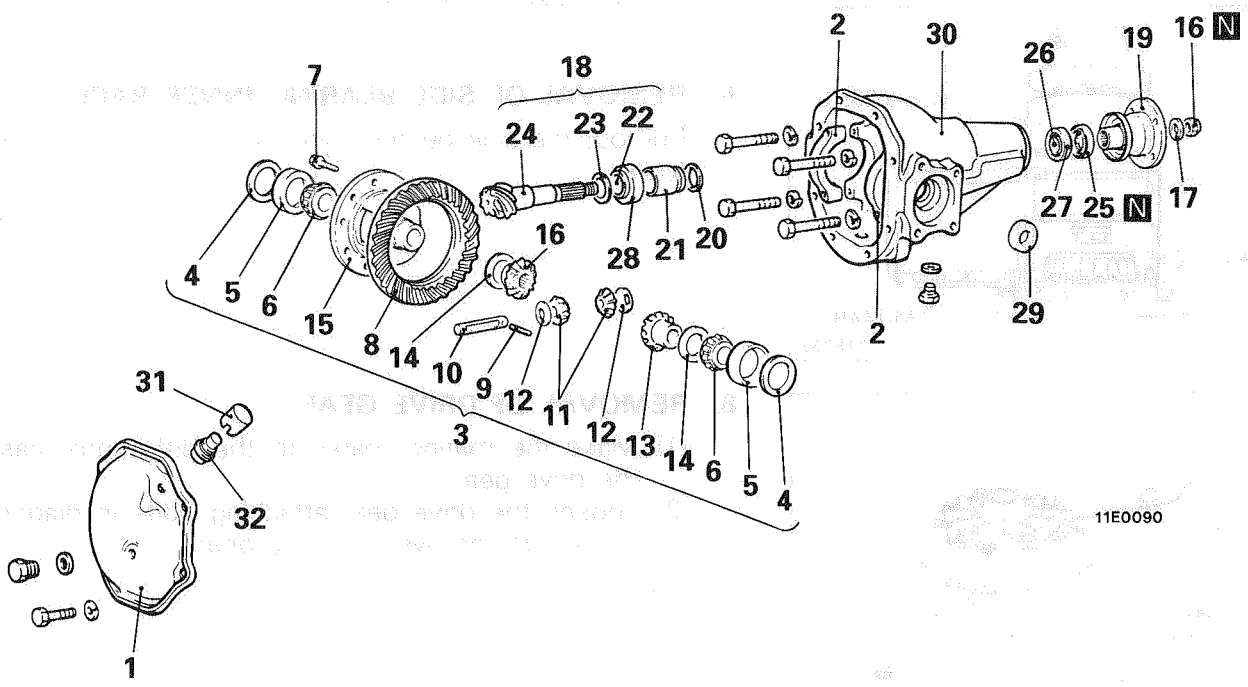

Disassembly steps

1. Cover
2. Bearing cap
3. Differential case assembly ◆◆
4. Side bearing adjusting spacer
5. Side bearing outer race
6. Side bearing inner race ◆◆
7. Bolt (10)
8. Drive gear ◆◆
9. Lock pin ◆◆
10. Pinion shaft
11. Pinion gear
12. Pinion washer
13. Side gear
14. Side gear thrust spacer
15. Differential case
16. Companion flange self-locking nut ◆◆
17. Washer
18. Drive pinion assembly ◆◆
19. Companion flange
20. Drive pinion rear shim (for preload adjustment)
21. Drive pinion spacer
22. Drive pinion front bearing inner race ◆◆
23. Drive pinion front shim (for pinion height adjustment)
24. Drive pinion
25. Oil seal
26. Drive pinion rear bearing inner race
27. Drive pinion rear bearing outer race ◆◆
28. Drive pinion front bearing outer race ◆◆
29. Oil seal
30. Gear carrier
31. Plug cover
32. Vent plug

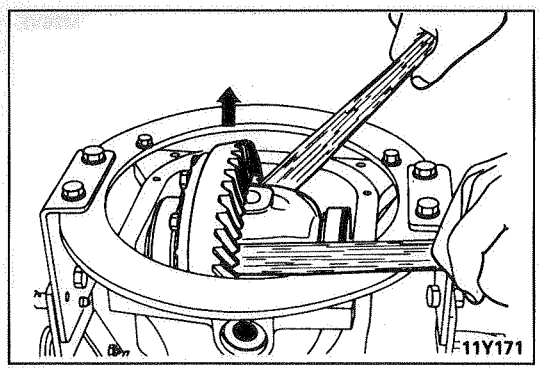

SERVICE POINTS OF DISASSEMBLY M26VFAC

3. REMOVAL OF DIFFERENTIAL CASE ASSEMBLY

Take out the differential case assembly with a hammer handle.

Caution
When taking out the differential case assembly, be careful not to drop and damage the side bearing outer races.

NOTE
Keep the right and left side bearings and side bearing adjusting spacers separate, so that they do not become mixed at the time of reassembly.

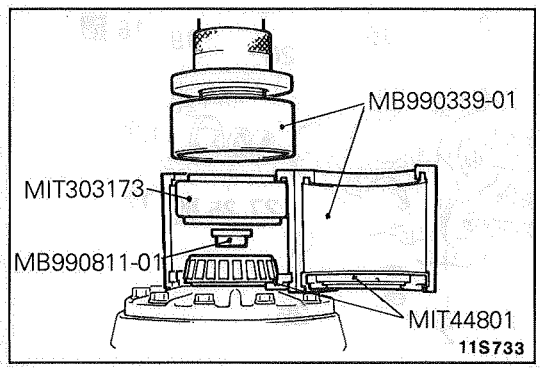

6. REMOVAL OF SIDE BEARING INNER RACE

Pull out the side bearing inner races by using the special tools.

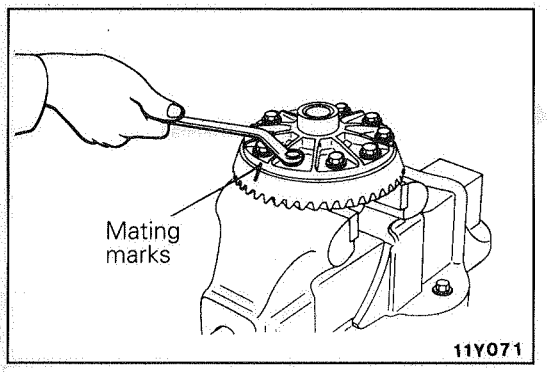

8. REMOVAL OF DRIVE GEAR

(1) Make the mating marks to the differential case and the drive gear.
(2) Loosen the drive gear attaching bolts in diagonal sequence to remove the drive gear.

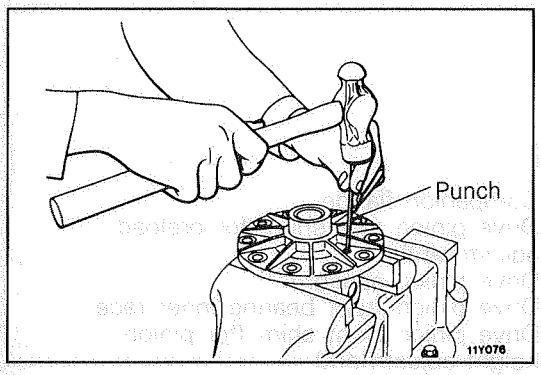

9. REMOVAL OF LOCK PIN

Drive out the lock pin with a punch.

NOTE
The removed side gears and side gear thrust spacers, left and right, should be retained for reassembly.

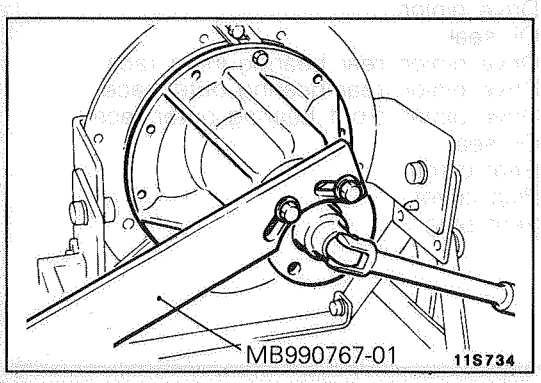

17. REMOVAL OF COMPANION FLANGE SELF-LOCKING NUT

Use the special tool to hold the companion flange and remove the companion flange self-locking nut.

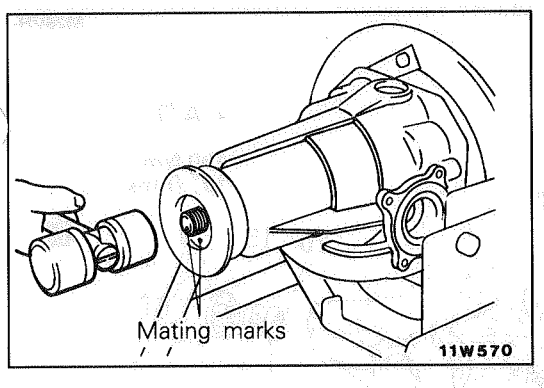

19. REMOVAL OF DRIVE PINION ASSEMBLY

(1) Make mating marks on the drive pinion and companion flange.

Caution
The mating mark made on the companion flange must not be on the coupling surface of the flange yoke and the front propeller shaft.

(2) Drive out the drive pinion together with the drive pinion spacer and drive pinion shims.

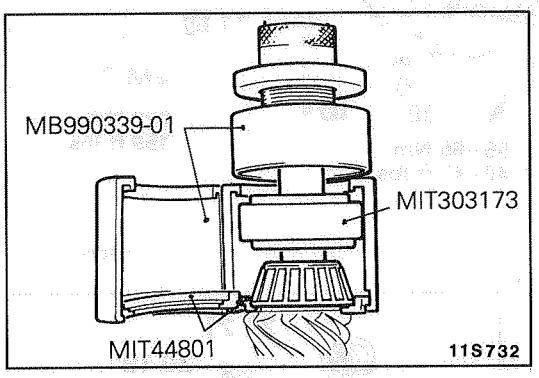

23. REMOVAL OF DRIVE PINION FRONT BEARING INNER RACE

Pull out the drive pinion front bearing inner race by using the special tools.

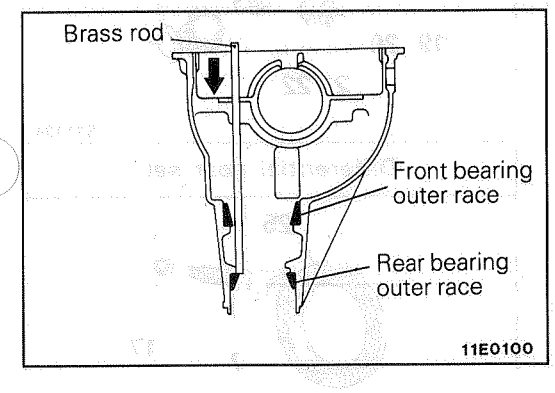

27. REMOVAL OF DRIVE PINION REAR BEARING OUTER RACE /28. DRIVE PINION FRONT BEARING OUTER RACE

(1) Drive out the drive pinion rear bearing outer race from the gear carrier by using the brass rod.
(2) Drive out the front bearing outer race in the same manner.

INSPECTION M26VGAB

- Check the companion flange for wear or damage.
- Check the oil seal for wear or deterioration.
- Check the bearings for wear or discoloration.
- Check the gear carrier for cracks.
- Check the drive pinion and drive gear for wear or cracks.
- Check the side gears, pinion gears and pinion shaft for wear or damage.
- Check the side gear spline for wear or damage.

REASSEMBLY

M26VH--

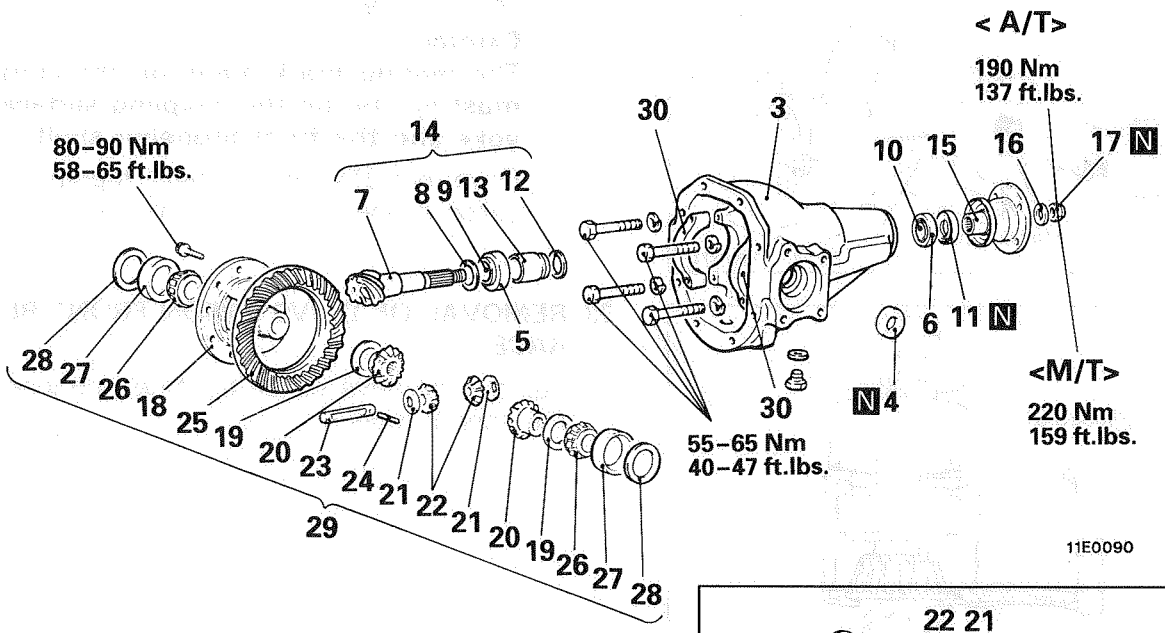

11E0090

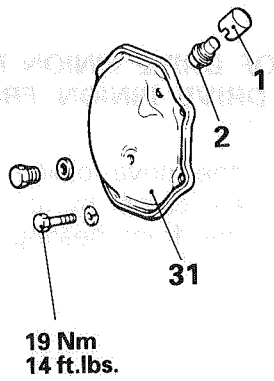

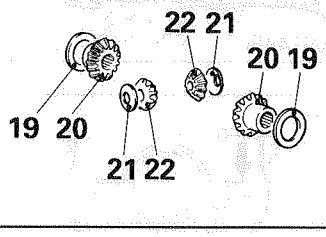

S11134

Differential gear set

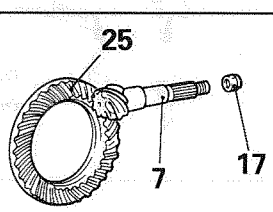

11E0092

Final drive gear set

Reassembly steps

1. Vent plug
2. Plug cover
3. Gear carrier
- ◆◆ 4. Oil seal
- ◆◆ 5. Drive pinion front bearing outer race
- ◆◆ 6. Drive pinion rear bearing outer race
- ◆◆ • Adjustment of pinion height
7. Drive pinion
8. Drive pinion front shim (for pinion height adjustment)
9. Drive pinion front bearing inner race
- ◆◆ • Adjustment of drive pinion turning torque
10. Drive pinion rear bearing inner race
11. Oil seal
12. Drive pinion rear shim (for turning torque adjustment)
13. Drive pinion spacer
14. Drive pinion assembly
15. Companion flange
16. Washer
17. Companion flange self-locking nut
18. Differential case
19. Side gear thrust spacer
20. Side gear
21. Pinion washer
22. Pinion gear
- ◆◆ • Adjustment of differential gear backlash
23. Pinion shaft
- ◆◆ 24. Lock pin
- ◆◆ 25. Drive gear
- ◆◆ 26. Side bearing inner race
27. Side bearing outer race
- ◆◆ • Adjustment of final drive gear backlash
28. Side bearing adjusting spacer
29. Differential case assembly
30. Bearing cap
31. Cover

TSB Revision

LUBRICATION, SEALING AND ADHESION POINTS

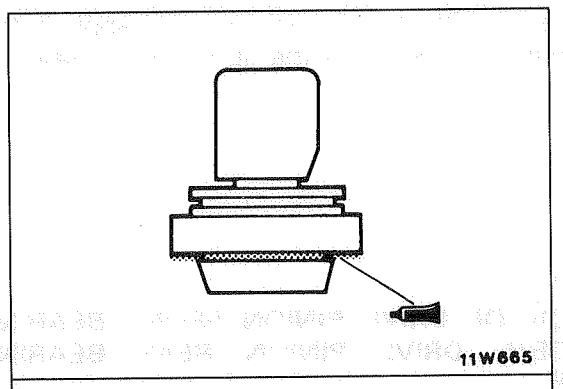

Sealant:
3M ATD Part No. 8661, 8663 or equivalent

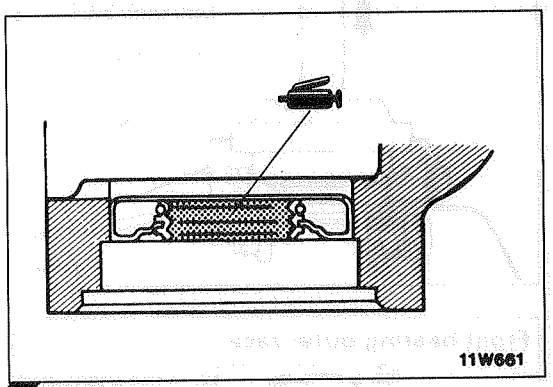

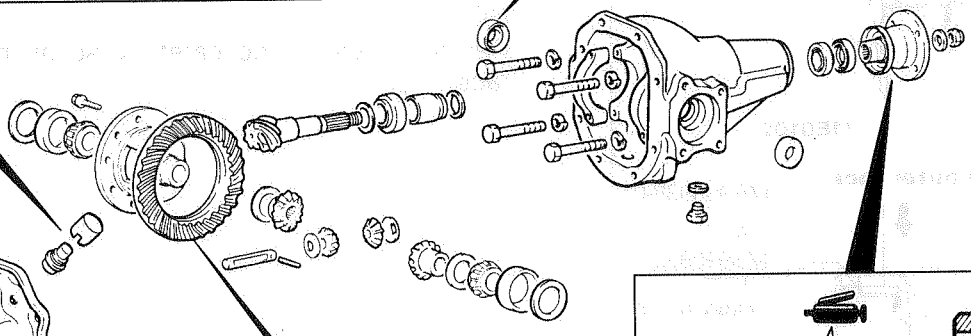

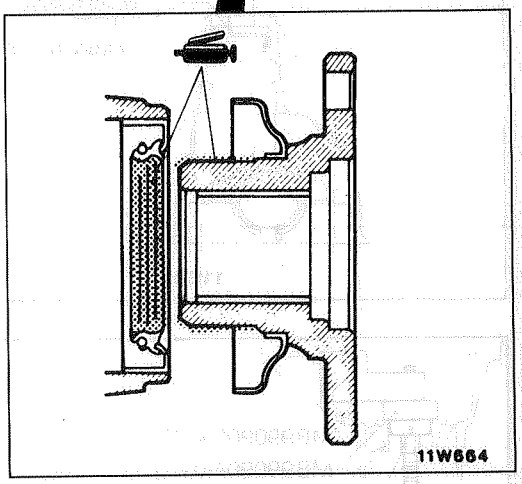

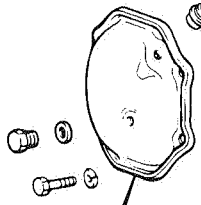

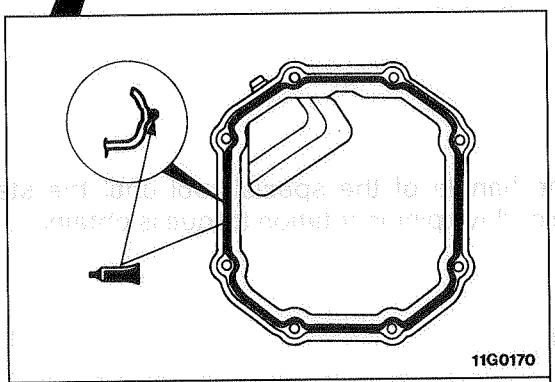

Sealant:
3M ATD Part No. 8661, 8663 or equivalent

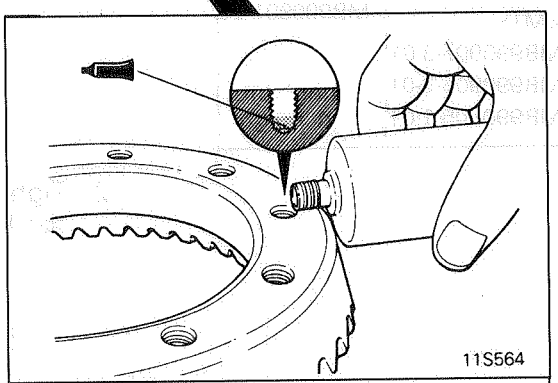

Adhesive:
3M Stud Locking 4170 or equivalent

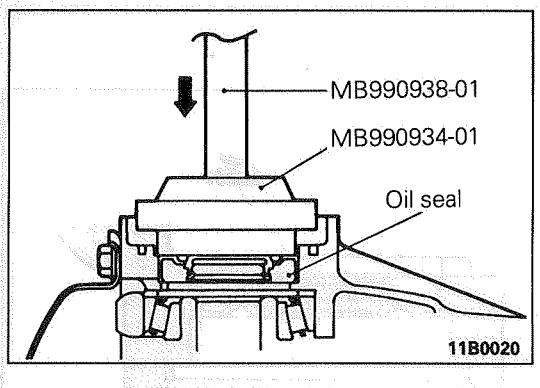

SERVICE POINTS OF REASSEMBLY M26VIAF

4. INSTALLATION OF OIL SEAL

Install the oil seal with the special tool and apply a thin coat of multipurpose grease to the lip of the oil seal.

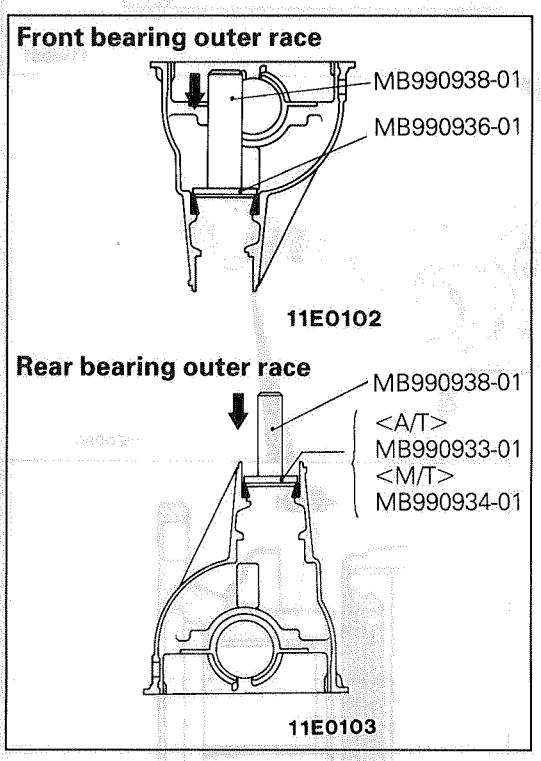

5. INSTALLATION OF DRIVE PINION FRONT BEARING OUTER RACE/6. DRIVE PINION REAR BEARING OUTER RACE

Press-fit the drive pinion front bearing outer races into the gear carrier by using the special tools.

NOTE
Perform press-fitting carefully so as not to tilt the outer race.

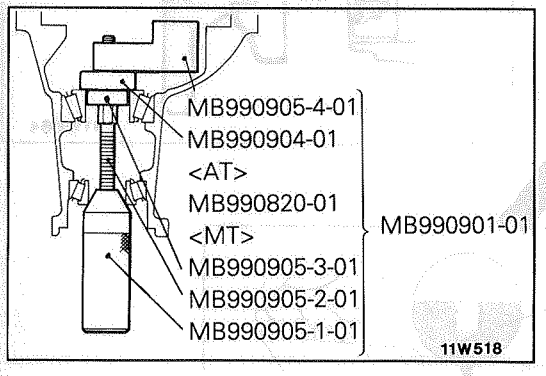

- **ADJUSTMENT OF PINION HEIGHT**

Adjust the drive pinion height by the following procedures:

(1) Install special tools and drive pinion front and rear bearing inner races to the gear carrier in the sequence shown in the illustration.

(2) Tighten the handle of the special tool until the standard value of drive pinion rotation torque is obtained.

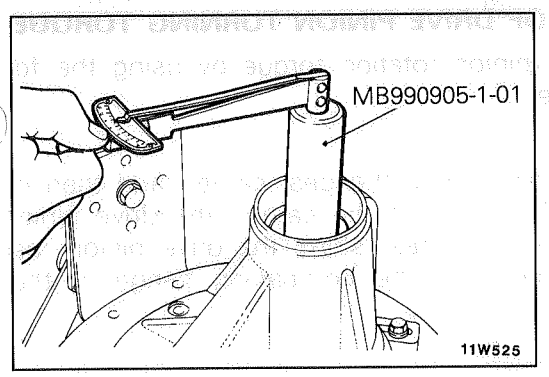

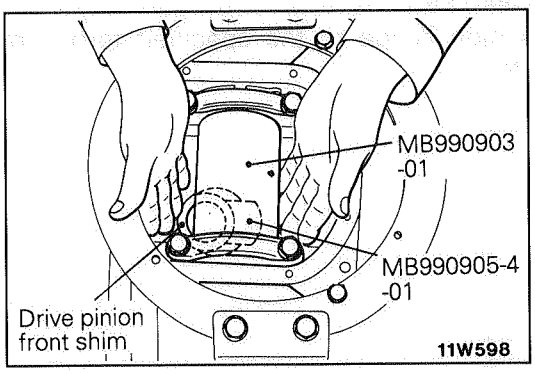

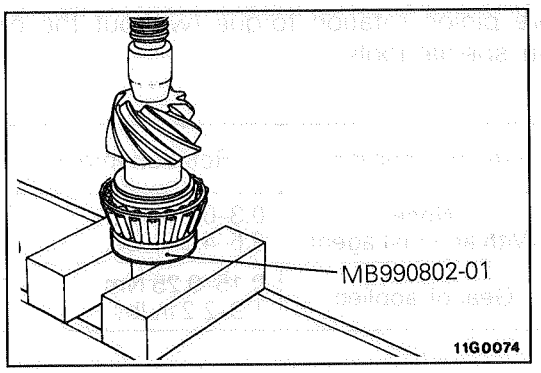

(3) Measure the drive pinion rotation torque (without the oil seal) by using the special tools.

Standard value:

Bearing division	Bearing lubrication	Rotation torque
New	None (With anti-rust agent)	0.3–0.5 Nm 2.6–4.3 in.lbs.
New/reusing	Gear oil applied	0.15–0.25 Nm 1.3–2.2 in.lbs.

NOTE
1. Gradually tighten the handle of the special tool while checking the drive pinion preload.
2. Because one rotation can't be made when the special tool is in contact with the gear carrier, move it a few times and, after seating the bearing, measure the rotation torque.

(4) Position the special tool in the side bearing seat of the gear carrier, and then select a drive pinion front shim of a thickness which corresponds to the gap between the special tools.

NOTE
1. Be sure to clean the side bearing seat thoroughly. When positioning the special tool, be sure that the cut-out sections of the special tool are in the position shown in the illustration, and also confirm that the special tool is in close contact with the side bearing seat.
2. When selecting the drive pinion front shims, keep the number of shims to a minimum.

(5) Fit the selected drive pinion front shim(s) to the drive pinion, and press-fit the drive pinion front bearing inner race by using the special tool.

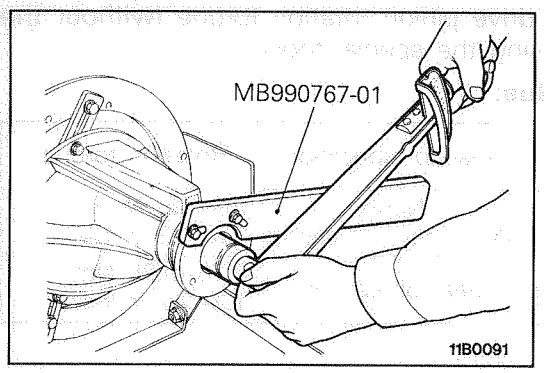

• ADJUSTMENT OF DRIVE PINION TURNING TORQUE

Adjust the drive pinion rotation torque by using the following procedure:

Without Oil Seal

(1) Insert the drive pinion into the gear carrier, and then install, from the front side of the carrier, the drive pinion spacer, the drive pinion rear shim, the drive pinion rear bearing inner race, and the companion flange in that order.

NOTE
Do not install the oil seal.

(2) Tighten the companion flange to the specified torque by using the special tool.

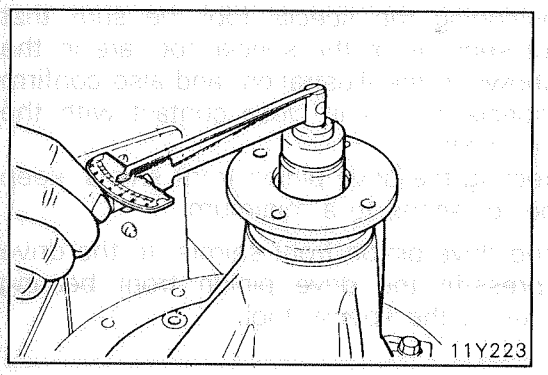

(3) Measure the drive pinion rotation torque (without the oil seal) by using the special tools.

Standard value:

Bearing division	Bearing lubrication	Rotation torque
New	None (With anti-rust agent)	0.3–0.5 Nm 2.6–4.3 in.lbs.
New/reusing	Gear oil applied	0.15–0.25 Nm 1.3–2.2 in.lbs.

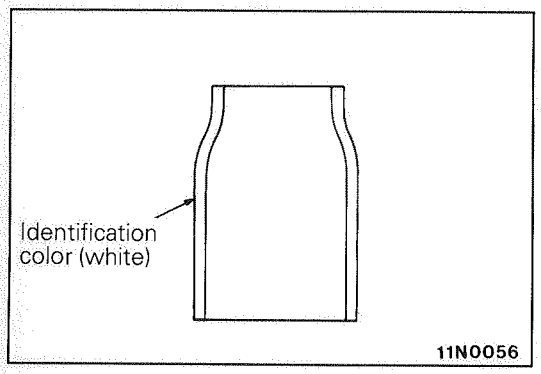

(4) If the drive pinion rotation torque is not within the range of the standard value, adjust the preload by replacing the drive pinion front shim(s) or the drive pinion spacer.

NOTE
When selecting the drive pinion rear shims, if the number of shims is large, reduce the number of shims to a minimum by selecting the drive pinion spacers.
Also, select the drive pinion spacer from the following two types.

Item	<A/T>	<M/T>
Height of drive pinion spacer mm (in.)	46.67 (1.837) With identification color	56.67 (2.231) With identification color
	47.01 (1.851) No identification color	57.01 (2.244) No identification color

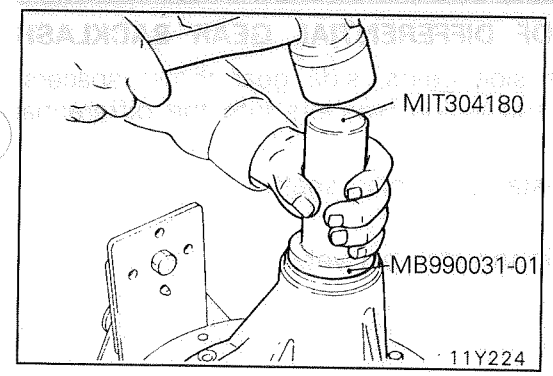

(5) Remove the companion flange and drive pinion once again.

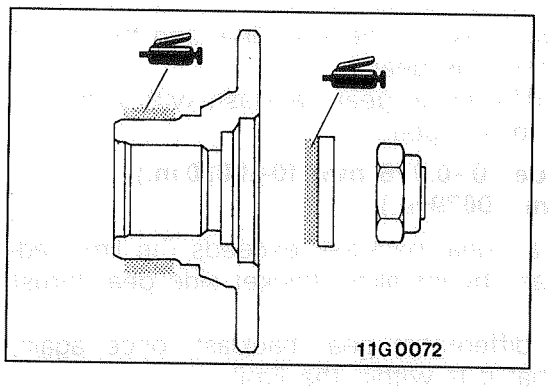

With Oil Seal

(1) After setting the drive pinion rear bearing inner race, drive the oil seal into the gear carrier front lip by using the special tool.

(2) Apply multi-purpose grease to the contact surfaces of the companion flange oil seal and the washer companion flange.

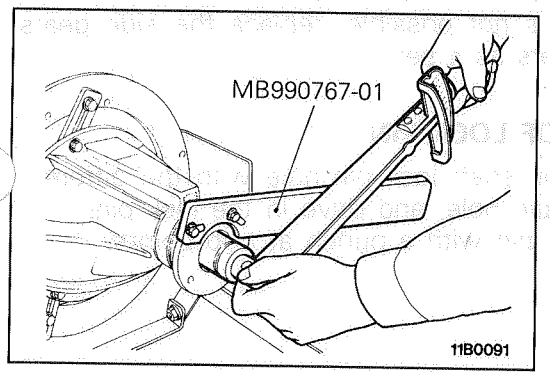

(3) Install the drive pinion assembly and companion flange with mating marks properly aligned, and tighten the companion flange self-locking nut to the specified torque by using the special tools.

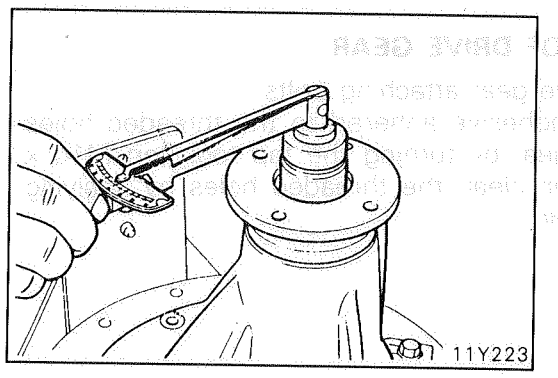

(4) Measure the drive pinion rotation torque (with oil seal) by using the special tools to verify that the drive-pinion preload complies with the standard value.

Standard value:

Bearing division	Bearing lubrication	Rotation torque
New	None (With anti-rust agent)	0.5–0.7 Nm 4.3–6.1 in.lbs.
New/reusing	Gear oil applied	0.35–0.45 Nm 3.1–3.9 in.lbs.

(5) If the measured value is not within the standard value range, check for faulty installation of the oil seal or faulty tightening of the self-locking nut.

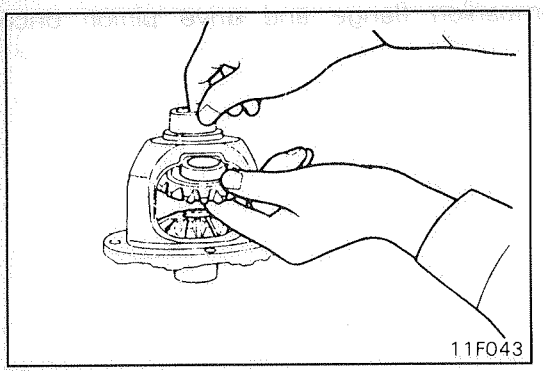

• ADJUSTMENT OF DIFFERENTIAL GEAR BACKLASH

(1) Assemble the side gears, side gear thrust spacers, pinion gears, and pinion washers into the differential case.

(2) Temporarily install the pinion shaft.

NOTE
Do not drive in the lock pin yet.

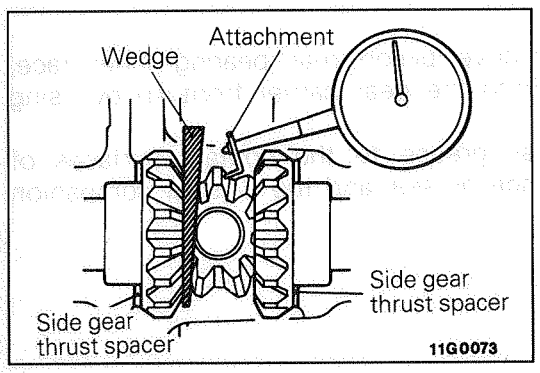

(3) Insert a wedge between the side gear and the pinion shaft to lock the side gear.

(4) Measure the differential gear backlash with a dial indicator on the pinion gear.

Standard value: 0–0.076 mm (0–.0030 in.)
Limit: 0.2 mm (.0079 in.)

(5) If the differential gear backlash exceeds the limit, adjust the backlash by installing thicker side gear thrust spacers.

(6) Measure the differential gear backlash once again, and confirm that it is within the limit.
If adjustment is not possible, replace the side gears and pinion gears as a set.

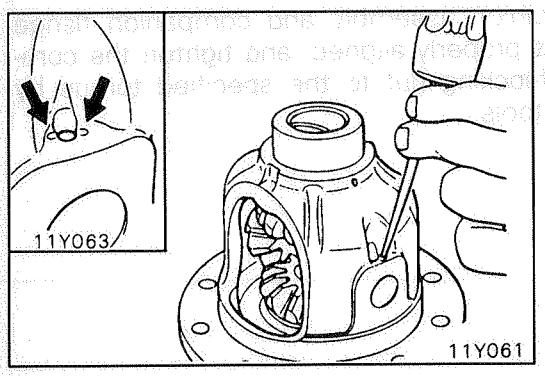

24. INSTALLATION OF LOCK PIN

(1) Align the pinion shaft lock pin hole with the differential case lock pin hole, and drive in the lock pin.

(2) Stake the lock pin with a punch at two points.

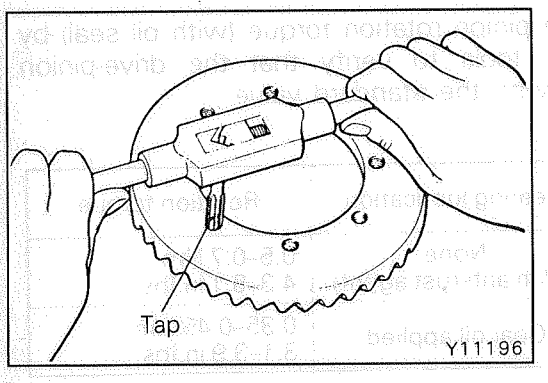

26. INSTALLATION OF DRIVE GEAR

(1) Clean the drive gear attaching bolts.

(2) Remove the adhesive adhered to the threaded holes of the drive gear by turning the tap tool (tap M10 × 1.25), and then clean the threaded holes by applying compressed air.

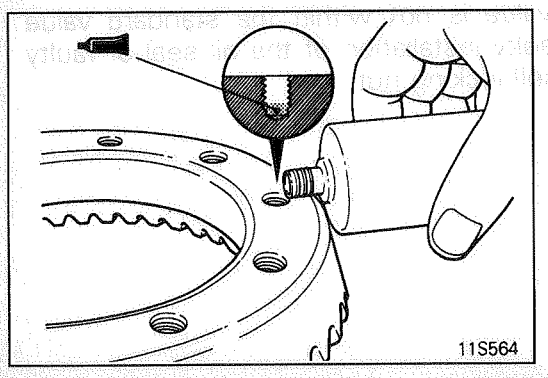

(3) Apply the specified adhesive to the threaded holes of the drive gear.

Specified adhesive: 3M Stud Locking 4170 or equivalent

(4) Install the drive gear onto the differential case with the mating marks properly aligned. Tighten the bolts to the specified torque in a diagonal sequence.

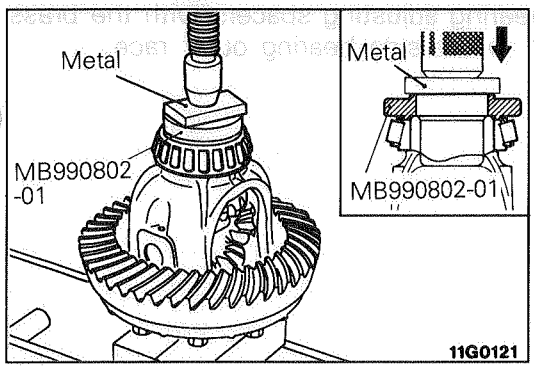

27. INSTALLATION OF SIDE BEARING INNER RACE

Press-fit the side bearing inner races to the differential case by using the special tool.

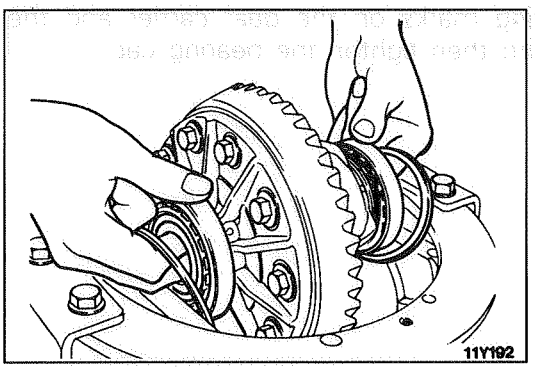

• ADJUSTMENT OF FINAL DRIVE GEAR BACKLASH

Adjust the final drive gear backlash by the following procedures:

(1) Install the side bearing spacers, which are thinner than those removed, to the side bearing outer races, and then mount the differential case assembly into the gear carrier.

NOTE
Select side bearing spacers with the same thickness for both the drive pinion side and the drive gear side.

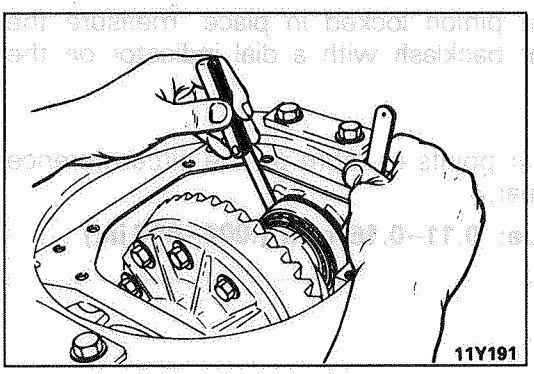

(2) Push the differential case assembly to one side, and measure the clearance between the gear carrier and the side bearing adjusting spacer with a feeler gage.

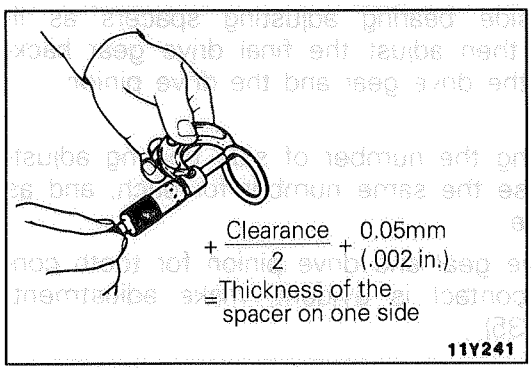

(3) Measure the thickness of the side bearing adjusting spacers on one side, select two pairs of spacers which correspond to that thickness plus one half of the clearance plus 0.05 mm (.002 in.), and then install one pair each to the drive pinion side and the drive gear side.

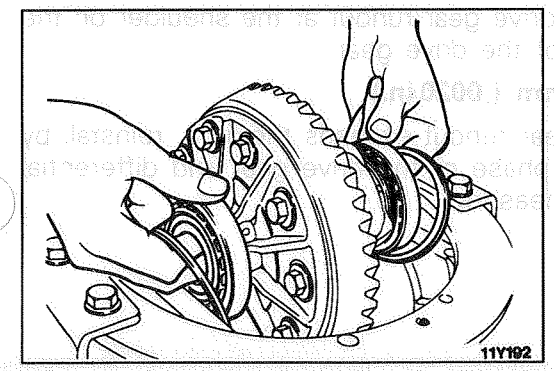

(4) Install the side bearing adjusting spacers and differential case assembly, as shown in the illustration, to the gear carrier.

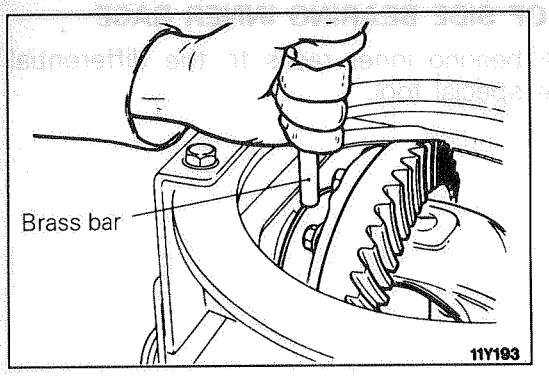

(5) Tap the side bearing adjusting spacers with the brass bar to fit them to the side bearing outer race.

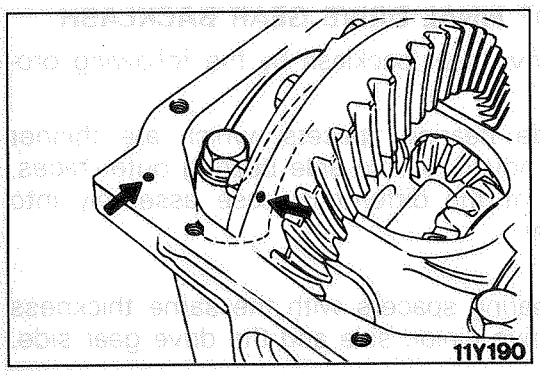

(6) Align the mating marks on the gear carrier and the bearing cap, and then tighten the bearing cap.

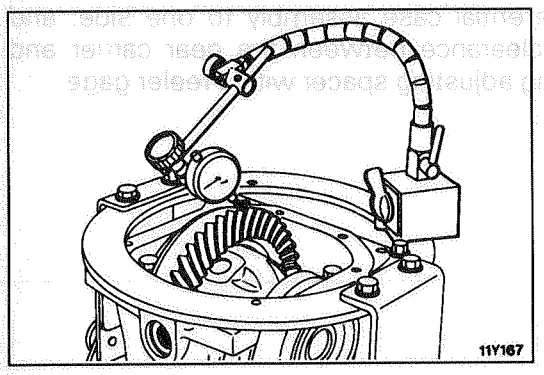

(7) With the drive pinion locked in place, measure the final drive gear backlash with a dial indicator on the drive gear.

NOTE
Measure at four points or more on the circumference of the drive gear.

Standard value: 0.11–0.16 mm (.004–.006 in.)

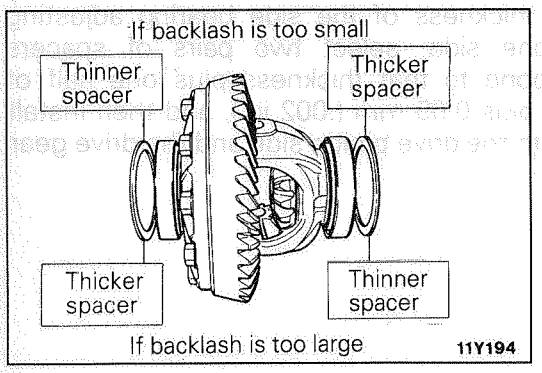

(8) Change the side bearing adjusting spacers as illustrated, and then adjust the final drive gear backlash between the drive gear and the drive pinion.

NOTE
When increasing the number of side bearing adjusting spacers, use the same number for each, and as few as possible.

(9) Check the drive gear and drive pinion for tooth contact. If poor contact is evident, make adjustment. (Refer to P.26-35)

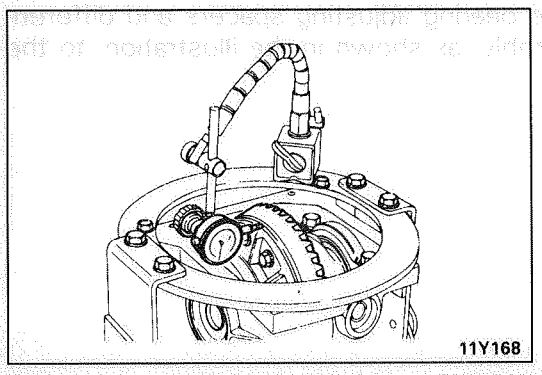

(10) Measure the drive gear runout at the shoulder on the reverse side of the drive gear.

Limit: 0.05 mm (.0020 in.)

(11) If the drive gear runout exceeds the limit, reinstall by changing the phase of the drive gear and differential case, and remeasure.

TSB Revision

REAR AXLE

CONTENTS

M27AA--

AXLE ASSEMBLY **15**

AXLE SHAFT **17**

DIFFERENTIAL CARRIER **25**

REAR DIFFERENTIAL LOCK **22**

SERVICE ADJUSTMENT PROCEDURES **11**
- Axle Housing Oil Seal Replacement 13
- Axle Shaft End Play Check 12
- Gear Oil Level Check 12
- Limited Slip Differential Preload Measurement 12
- Rear Axle Total Backlash Check 11
- Rear Differential Lock Detection Switch Check 14
- Rear Differential Lock System Air Leakage Check 14

SPECIAL TOOLS **5**

SPECIFICATIONS **2**
- General Specifications 2
- Lubricants 4
- Sealants and Adhesives 4
- Service Specifications 2

TROUBLESHOOTING **8**
- AXLE SHAFT, AXLE HOUSING 8
  - Grease Leakage
  - Noise While Wheels are Rotating
- DIFFERENTIAL (CONVENTIONAL DIFFERENTIAL) 8
  - Bearing Noise While Driving or Coasting
  - Constant Noise
  - Gear Noise While Coasting
  - Gear Noise While Driving
  - Heat
  - Noise While Turning
  - Oil Leakage
- DIFFERENTIAL (LIMITED-SLIP DIFFERENTIAL WITH REAR DIFFERENTIAL LOCK) 9
  - Abnormal Noise During Driving or Gear Changing
  - Abnormal Noise When Cornering Breakdown
  - Breakdown
  - Gear Noise
  - Gear Oil Leakage
  - Limited Slip Differential Does not Function
  - Seizure
- REAR DIFFERENTIAL LOCK 11

SPECIFICATIONS

GENERAL SPECIFICATIONS

M27CA--

Items	3000	
	Vehicles without wide fender	Vehicles with wide fender
Axle housing type	Banjo type	Banjo type
Axle shaft Supporting type	Semi-floating type	Semi-floating type
Differential Differential size Reduction gear type Reduction ratio Pinion gear type	 No. 7 Hypoid gear 4.625 2 pinion or 4 pinion*	 No. 7 Hypoid gear 4.875 2 pinion or 4 pinion*

NOTE
*: Vehicles with rear differential lock or limited slip differential

SERVICE SPECIFICATIONS

M27CB--

Items	Vehicles with a conventional differential	Vehicles with a limited slip differential
Standard value Axle shaft end play mm (in.)	 0.25 (.0098)	 0.25 (.0098)
Limited slip differential preload Nm (ft.lbs.)	–	25 (18) or more
Protruding length of stabilizer bar mounting bolt mm (in.)	15–17 (.59–.67)	15–17 (.59–.67)
Press-fitting force of retainer N (lbs.) Initial press-fitting force Final press-fitting force	 50,000 (11,023) 100,000–110,000 (22,046–24,251)	 50,000 (11,023) 100,000–110,000 (22,046–24,251)
Clearance of snap ring and retainer mm (in.)	0.166 (.0065) or less	0.166 (.0065) or less
Rear differential lock air pump pressure kPa (psi)	25–40 (4–6)	–

SPECIAL TOOLS

M27DA--

Tool	Number	Name	Use
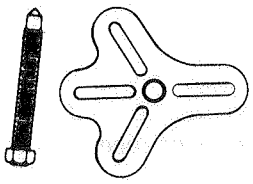	MB990241-01	Axle puller	Measurement of limited slip differential preload Removal of axle shaft (use with MB990211-01)
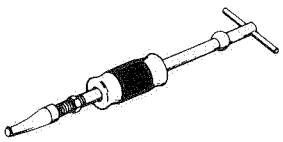	MB990211-01	Sliding hammer with adapter	Removal of axle shaft (use with MB990241-01) Removal of axle housing oil seal
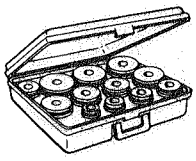	MB990925-01	Bearing and oil seal installer disc set (Refer to GROUP 26.)	Pressing of axle housing oil seal MB990932-01 Pressing of axle shaft oil seal MB990936-01 Pressing of drive pinion rear bearing outer race MB990937-01 Pressing of drive pinion front bearing outer race MB990934-01
	MB990938-01	Handle	Pressing of axle housing oil seal Pressing of axle shaft oil seal Pressing of drive pinion rear bearing outer race Pressing of drive pinion front bearing outer race
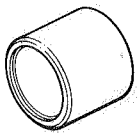	MB990890-01	Rear suspension bushing base	Pressing of axle shaft bearing outer race
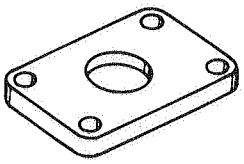	MB990787-01	Rear axle bearing case remover	Removal of axle shaft bearing and bearing case
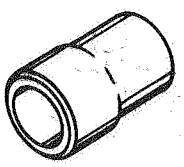	MB990799-01	Axle bearing remover and installer	Pressing of axle shaft bearing inner race Pressing of axle shaft retainer

Tool	Number	Name	Use
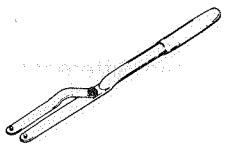	MB990201-01	Adjustable wrench	Removal and adjustment of side bearing nut
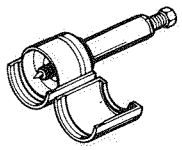	MB990339-01	Pinion carrier bearing puller	Removal of sidbearing inner race (use with MB990811-01) Removal of drive pinion rear bearing inner race
	MIT303173	Insert	
	MIT44801	Collet set	
	MB990811-01	Side bearing cup remover step plate	Removal of side bearing inner race
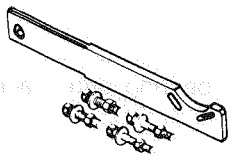	MB990767-01	End yoke holder	Holding of companion flange
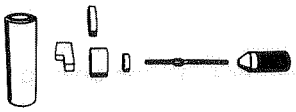	MB990901-01	Pinion height gage set	Measurement of pinion height
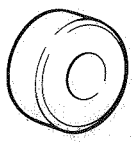	MIT215838	Aligning adapter	
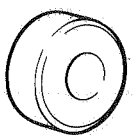	MIT215839	Gage disk	

Tool	Number	Name	Use
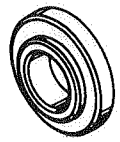	MB990802-01	Bearing installer	Pressing of drive pinion rear bearing inner race Pressing of side bearing inner race
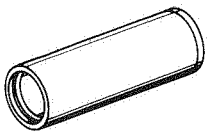	MIT304180	Handle	Pressing of drive pinion oil seal
	MB990031-01	Drive pinion oil seal installer	
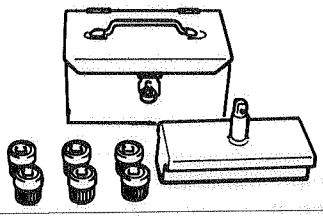	MB990988	Side gear holding tool set	Measurement of limited slip differential preload Tool C, MB990989 Confirmation of rear differential lock
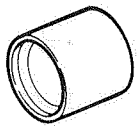	MB991388	Bushing remover base	Pressing of ABS rotor assembly

MB990988

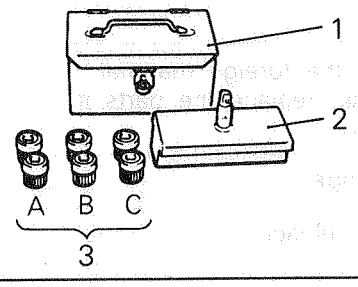

	Tool number	Name	O.D. mm (in.)
1	MB990551	Box	–
2	MB990989	Base	–
3	(MB990990)	Tool A	25 (.98)
	(MB990991)	Tool B	28 (1.10)
	(MB990992)	Tool C	31 (1.22)

TROUBLESHOOTING

M27EAAAa

Symptom	Probable cause	Remedy
AXLE SHAFT, AXLE HOUSING		
Noise while wheels are rotating	Brake drag Bent axle shaft Worn or scarred axle shaft bearing	Replace
Grease leakage	Worn or damaged oil seal Malfunction of bearing seal	Replace
DIFFERENTIAL (CONVENTIONAL DIFFERENTIAL)		
Constant noise	Improper final drive gear tooth contact adjustment Loose, worn or damaged side bearing Loose, worn or damaged drive pinion bearing	Correct or replace
	Worn drive gear, drive pinion Worn side gear thrust washer or pinion shaft Deformed drive gear or differential case Damaged gear	Replace
	Foreign material	Eliminate the foreign material and check; replace if necessary
	No oil	Fill or change
Gear noise while driving	Poor gear engagement Improper gear adjustment Improper drive pinion preload adjustment	Correct or replace
	Damaged gear	Replace
	Foreign material	Eliminate the foreign material and check; replace the parts if necessary
	Insufficient oil	Fill or change
Gear noise while coasting	Improper drive pinion preload adjustment	Correct or replace
	Damaged gear	Replace
Bearing noise while driving or coasting	Cracked or damaged drive pinion rear bearing	Replace
Noise while turning	Loose side bearing Damaged side gear, pinion gear or pinion shaft	Replace
Heat	Improper gear backlash Excessive preload	Adjust
	Insufficient oil	Fill or change

TSB Revision

Symptom	Probable cause	Remedy
Oil leakage	Clogged breather hose	Clean or replace
	Cover tightened not Seal malfunction	Retighten, apply sealant, or replace the gasket
	Worn or damaged oil seal	Replace
	Excessive oil	Adjust the oil level
DIFFERENTIAL (LIMITED-SLIP DIFFERENTIAL AND DIFFERENTIAL WITH REAR DIFFERENTIAL LOCK) Abnormal noise during driving or gear changing	Excessive final drive gear backlash Insufficient drive pinion preload	Adjust
	Excessive differential gear backlash	Adjust or replace
	Worn spline of a side gear	Replace
	Loose spline coupling self-locking nut	Retighten or replace
NOTE In addition to a malfunction of the differential carrier components, abnormal noise can also be caused by the universal joint of the propeller shaft, the axle shafts, the wheel bearings, etc. Before disassembling any parts, take all possibilities into consideration and confirm the source of the noise.		
Abnormal noise when cornering	Damaged differential gears Damaged pinion shaft Nicked and/or abnormal wear of inner and outer clutch plates Poor gear oil Abnormally worn or damaged thrust washer	Replace
	Improper gear oil quantity	Refill or replace
Gear noise	Improper final drive gear tooth contact adjustment	Adjust or replace
	Incorrect final drive gear backlash Improper drive pinion preload adjustment	Adjust
	Damaged, broken, and/or seized tooth surfaces of the drive gear and drive pinion Damaged, broken, and/or seized drive pinion bearings Damaged broken, and/or seized side bearings Damaged differential case Poor gear oil	Replace
	Improper gear oil quantity	Refill or replace
NOTE Noise from the engine, muffler vibration, transmission, propeller shaft, wheel bearings, tires, body, etc., is easily mistaken as being caused by malfunction in the differential carrier components. Be extremely careful and attentive when performing the driving test, etc. Test methods to confirm the source of the abnormal noise include: coasting, acceleration, constant speed driving, raising the rear wheels on a jack, etc. Use the method most appropriate to the circumstances.		

Symptom	Probable cause	Remedy
Gear oil leakage	Worn or damaged front oil seal, or an improperly installed oil seal Damaged gasket	Replace
	Loose spline coupling self-locking nut	Retighten or replace
	Loose filler or drain plug	Retighten or apply adhesive
	Clogged or damaged breather hose	Clean or replace
Seizure	Improper final drive gear backlash Excessive drive pinion preload Excessive side bearing preload Improper differential gear backlash Excessive clutch plate preload	Adjust
	Improper gear oil	Replace
	Improper gear oil quantity	Refill or replace
NOTE In the event of seizure, diassemble and replace the parts involved, and also be sure to check all components for any irregularities and repair or replace as necessary.		
Breakdown	Incorrect final drive gear backlash Incorrect drive pinion preload Incorrect side bearing preload Excessive differential gear backlash Incorrect clutch plate preload	Adjust
	Loose drive gear clamping bolts	Retighten
	Operational malfunction due to overloaded clutch	Avoid excessively rough operation
NOTE In addition to disassembling and replacing the failed parts, be sure to check all components for irregularities and repair or replace as necessary.		
Limited slip differential does not function (on snow, mud, ice, etc.).	The limited slip device is damaged	Disassemble, check the functioning, and replace the damaged parts

REAR DIFFERENTIAL LOCK

1. Troubleshooting procedures
   (1) Check to be sure that there are no cracks or damage in the air hose.
   (2) Check to be sure that the connectors for all parts are securely connected and that no fuses are blown.
   (3) Make sure you understand the check contents and order for troubleshooting in the quick reference table, and check according to the order given.
2. Troubleshooting quick-reference table
   (1) If the result of checking according to the order in the table below shows that there is no abnormality, the cause is probably that the control unit is defective.

Order	Check location	Check points	Judgement		Probable cause	Remedy
			Normal	Abnormal		
1	Air hose	Check visually	Air doesn't leak	Air leaks	Air leaking from hose connection	Repair or replace the air hose
2	Rear differential lock switch	Refer to P.27-24.			Switch is defective	Replace the switch
3	Center differential lock operation sensor switch	Set the transfer lever to the "4HLc" or "4LLc" position and check for continuity.	Continuity	No continuity	Switch is defective	Replace the switch
4	Rear differential lock detection switch	Refer to P.27-14.	Continuity	No continuity	Switch is defective	Replace the switch
5	Air pump	Refer to P.27-23.			Air pump is defective	Replace the air pump
6	Actuator	Refer to P.27-27.			Actuator is defective	Replace the actuator

   (2) Control unit output voltage check
   Refer to P.27-23.

SERVICE ADJUSTMENT PROCEDURES

REAR AXLE TOTAL BACKLASH CHECK M27FAAB

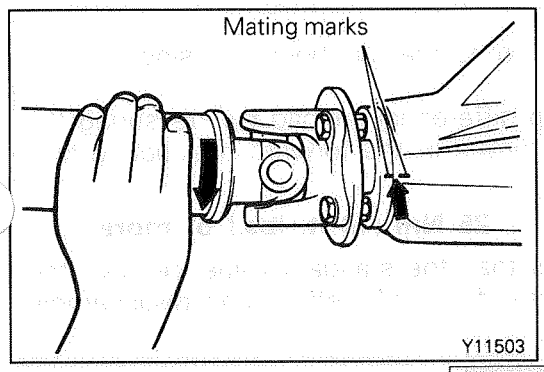

If the vehicle vibrates and produces a booming sound due to the unbalance of the driving system, measure the rear axle total backlash by the following procedures to see if the differential carrier assembly requires removal.

(1) Park the vehicles on a flat, level surface.
(2) Place the transmission control lever to the neutral position, and place the transfer control lever to the neutral position. Then pull the parking brake lever and raise the vehicle on a jack.

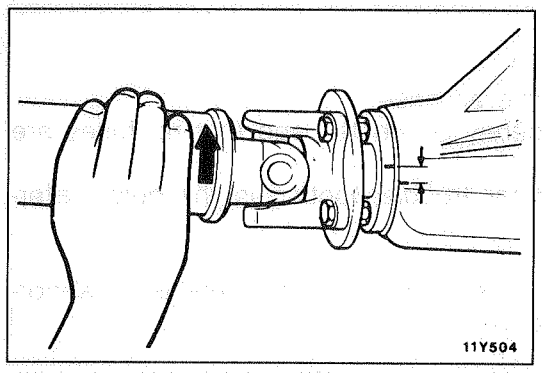

(3) Turn the companion flange clockwise as far as it will go. Make the mating mark on the dust cover of the companion flange and on the differential carrier.
(4) Turn the companion flange anti-clockwise as far as it will go, and measure the amount of distance through which the mating marks moved. If the backlash exceeds the limit, remove the differential carrier assembly and adjust the backlash.

Limit: 5 mm (.20 in.)

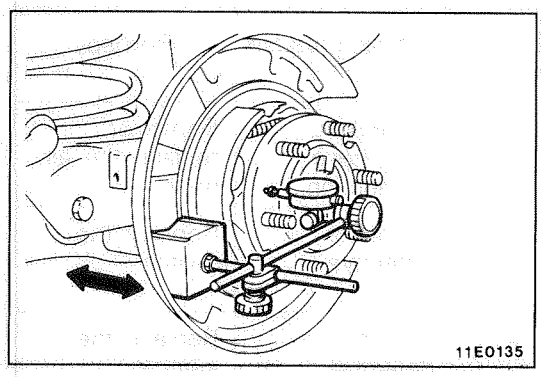

AXLE SHAFT END PLAY CHECK M27FBAB

Measure the axle shaft end play by using a dial indicator.

Standard value: 0.25 mm (.0098)

If the axle shaft end play exceeds the standard value, replace the bearing with new one.

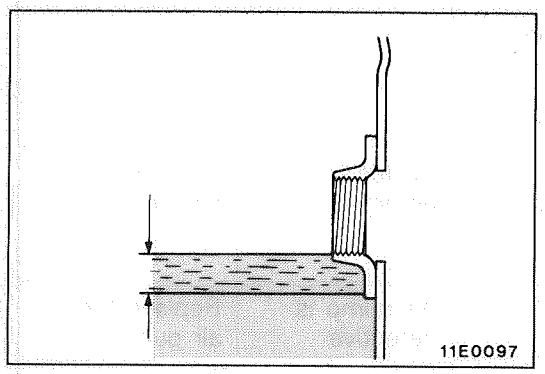

GEAR OIL LEVEL CHECK M27FCAC

Remove the filler plug, and check the oil level.
Check that gear oil level is not 8 mm (.3 in.) below the bottom of filler plug hole.

Specified gear oil:
<Conventional differential>
Hypoid gear oil API classification GL-5 or higher
SAE viscosity No. 90, 80W
2.6 dm³ (2.75 qts.)

<Limited slip differential>
Hypoid gear oil MITSUBISHI Genuine Gear Oil Part No. 8149630 EX or equivalent
2.6 dm³ (2.75 qts.)

LIMITED SLIP DIFFERENTIAL PRELOAD MEASUREMENT M27FDAD

To measure the preload of the limited slip differential, set the shift lever of the transmission to the neutral position, lock the front wheels, and fully release the parking brake. One of the rear wheels should be maintained in contact with the ground surface, and the other should be raised up.
Measure the starting torque at the side on which the wheel is in the raised position by using the following procedures.

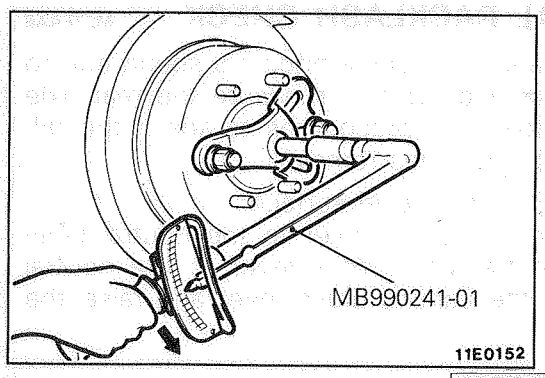

(1) Remove the wheel.
(2) Mount the special tool to the hub bolts by using the hub nuts.
(3) Find the limited slip differential preload by measuring the axle shaft starting torque in the forward direction with a torque wrench.

Standard value: 25 Nm (18 ft. lbs.) or more

(4) If the torque is less than the standard value, remove the limited slip differential from the vehicle and disassemble it.

AXLE HOUSING OIL SEAL REPLACEMENT M27FEAG

1. Release coupling between parking brake cable and backing plate.
2. Before disconnecting the brake pipe, drain the brake fluid from the bleeder screw.
3. Remove the nuts securing the backing plate to the axle housing.

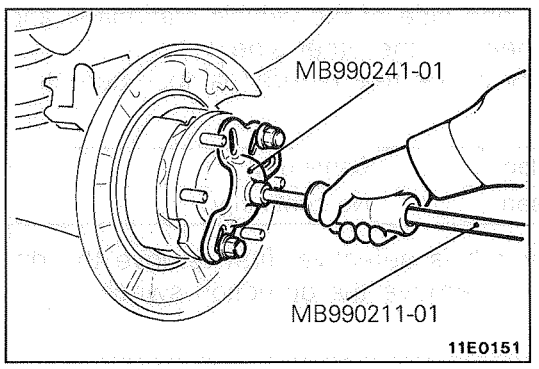

4. Pull the rear axle shaft from axle housing. If the rear axle shaft is hard to remove, use the special tools.

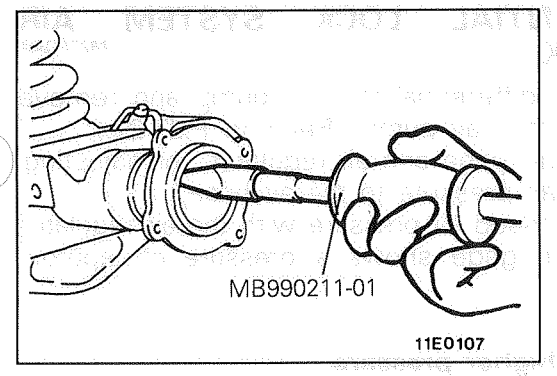

5. Use special tools with hook attached to remove the oil seal.
6. Apply multipurpose grease to the oil seal fitting area of the rear axle housing.

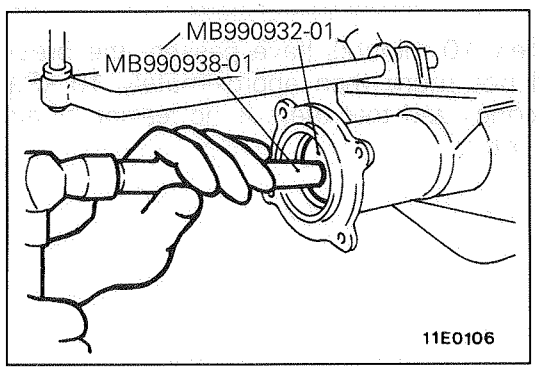

7. Drive the new oil seal into the rear axle housing end by using the special tool.
8. Apply multipurpose grease to the oil seal lip.
9. Install the rear axle shaft.
10. Install the brake tube and perform air bleeding of the brake system from the air bleeder. (Refer to GROUP 35 – Service Adjustment Procedures.)
11. Install the parking brake cable and adjust the parking brake lever stroke. (Refer to GROUP 36 – Service Adjustment Procedures.)

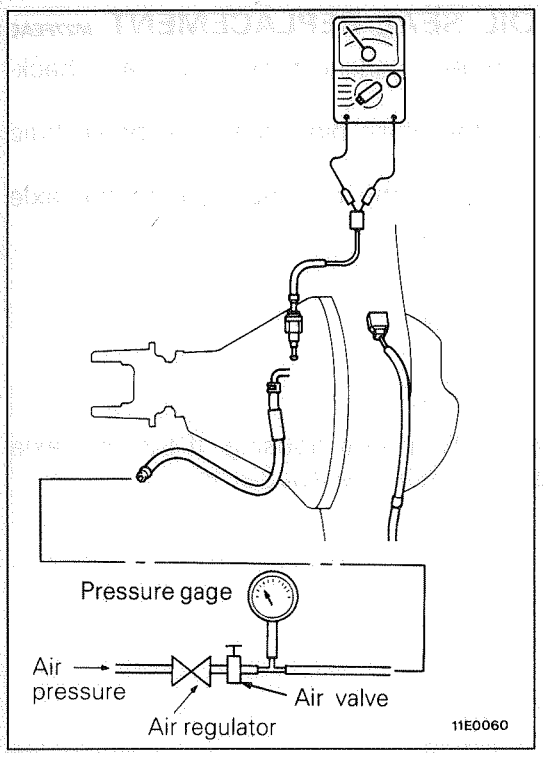

REAR DIFFERENTIAL LOCK DETECTION SWITCH CHECK

M27FOAA

1. Raise up the vehicle.
2. Remove the air pipe and air hose connections.
3. Connect a pressure gauge and air regulator, for adjusting the compressed air pressure, to the air hose.
4. Adjust the compressed air pressure with the air regulator until the pressure gauge shows a pressure of approx. 25 kPa (4 psi.).

Caution
Do not apply a higher pressure.

5. Hold the wheel on one side of the vehicle stationary, and slowly turn the wheel on the other side.
6. Check for continuity in the rear differential lock detection switch.

When air is supplied	Continuity
When air is released	No continuity

7. If the detection switch is defective, first remove the differential carrier, then remove the detection switch.

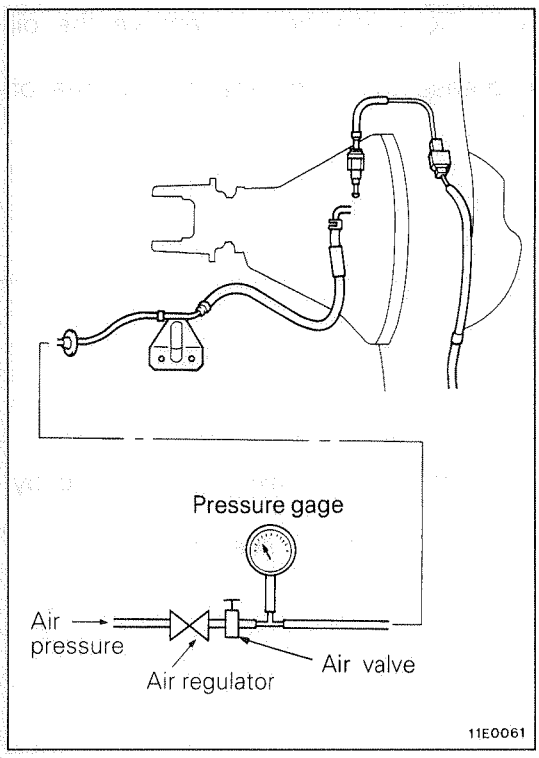

REAR DIFFERENTIAL LOCK SYSTEM AIR LEAKAGE CHECK

M27FQAA

1. Remove the rear differential lock air pump and remove the air hose from the air pump. (Refer to P.27-22.)
2. Connect a pressure gage and air regulator, for adjusting the compressed air pressure to the air hose.
3. Adjust the compressed air pressure with the air regulator until the pressure gage shows a pressure of approx. 35 kPa (5 psi.).

Caution
Do not apply a higher pressure.

4. Shut off air valve.
5. If after approximately 10 minutes have passed, the pressure has dropped not more than approximately 10 kPa (1 psi.), it can be concluded that there is no leaking of air from the air hose, etc.

AXLE ASSEMBLY

REMOVAL AND INSTALLATION

M27GA--

Post-installation Operation
- Air Bleeding from Brake Lines (Refer to GROUP 35 – Service Adjustment Procedures.)
- Checking and Adjustment of Load Sensing Spring Length (Refer to GROUP 35 – Service Adjustment Procedures.)
- Adjustment of Parking Brake Lever Stroke (Refer to GROUP 35 – Service Adjustment Procedures.)

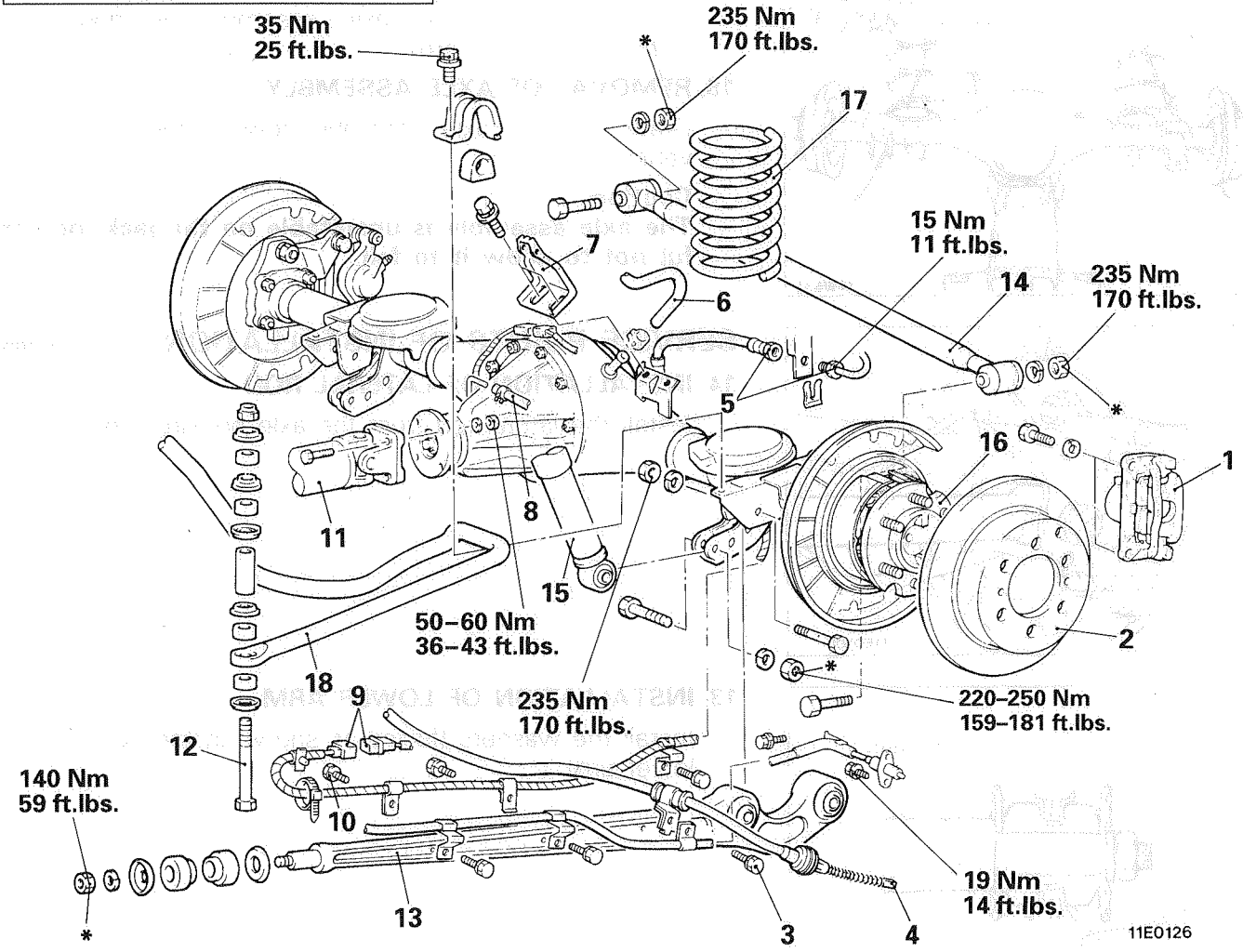

Removal steps

1. Rear brake assembly
2. Brake disc
3. Parking brake cable or speed sensor attaching bolt
4. Connection for parking brake cable end
5. Brake hose connection
6. Breather hose connection
7. Spring support for load sensing proportioning valve
8. Hose connection <Vehicles with rear differential lock>
9. Rear differential lock position harness connector
10. Rear differential lock position harness connection
11. Rear propeller shaft
12. Stabilizer bar installation bolt
13. Lower arm
14. Lateral rod
15. Shock absorber connection (lower part only)
16. Axle assembly
17. Coil spring
18. Stabilizer bar

NOTE
The part with * must be tightened with the vehicle lowered to the ground.

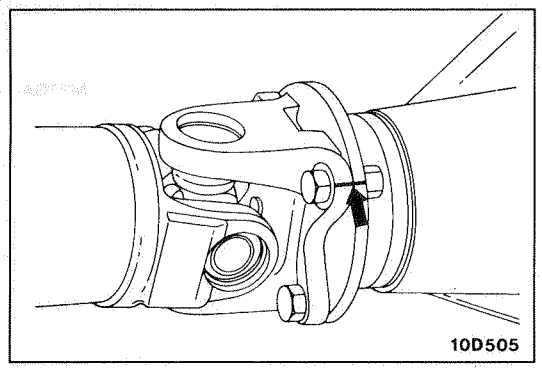

SERVICE POINTS OF REMOVAL M27GBAK

11. REMOVAL OF REAR PROPELLER SHAFT

Make the mating marks on the flange yoke of the rear propeller shaft and the companion flange of the differential case.

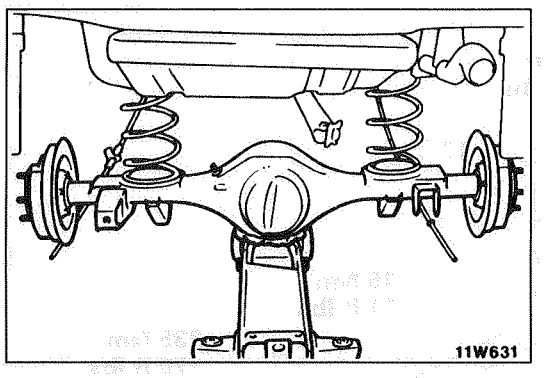

13. REMOVAL OF LOWER ARM

After supporting the axle assembly by floor jacks, remove the lower arm.

16. REMOVAL OF AXLE ASSEMBLY

Draw out the axle assembly toward the rear of the vehicle.

Caution
The axle assembly is unsuitable on the jack; be careful not to allow it to fall.

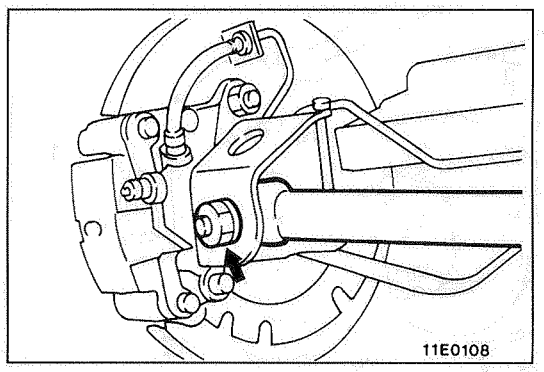

SERVICE POINTS OF INSTALLATION M27GDAK

14. INSTALLATION OF LATERAL ROD

Install the lateral rod from the axle housing side.

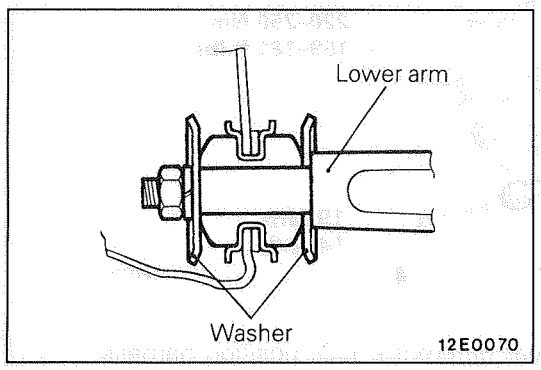

13. INSTALLATION OF LOWER ARM

Install the washers (facing as shown in the figure) to the lower arm.

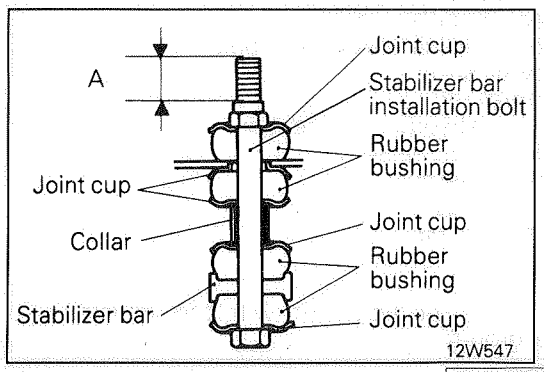

12. INSTALLATION OF STABILIZER BAR INSTALLATION BOLT

When installing the stabilizer bar to the stabilizer bar bracket, check that the amount of projection of the stabilizer bar installation bolt is within the standard value range.

Standard value (A): 15–17 mm (.59–.67 in.)

11. INSTALLATION OF REAR PROPELLER SHAFT

Align the mating marks on the flange yoke and the companion flange to install the rear propeller shaft.

AXLE SHAFT

REMOVAL AND INSTALLATION

M27HA--

Post-installation Operation
- Air Bleeding from Brake Lines (Refer to GROUP 35 – Service Adjustment Procedures.)
- Adjustment of Parking Brake Lever Stroke (Refer to GROUP 36 – Service Adjustment Procedures.)

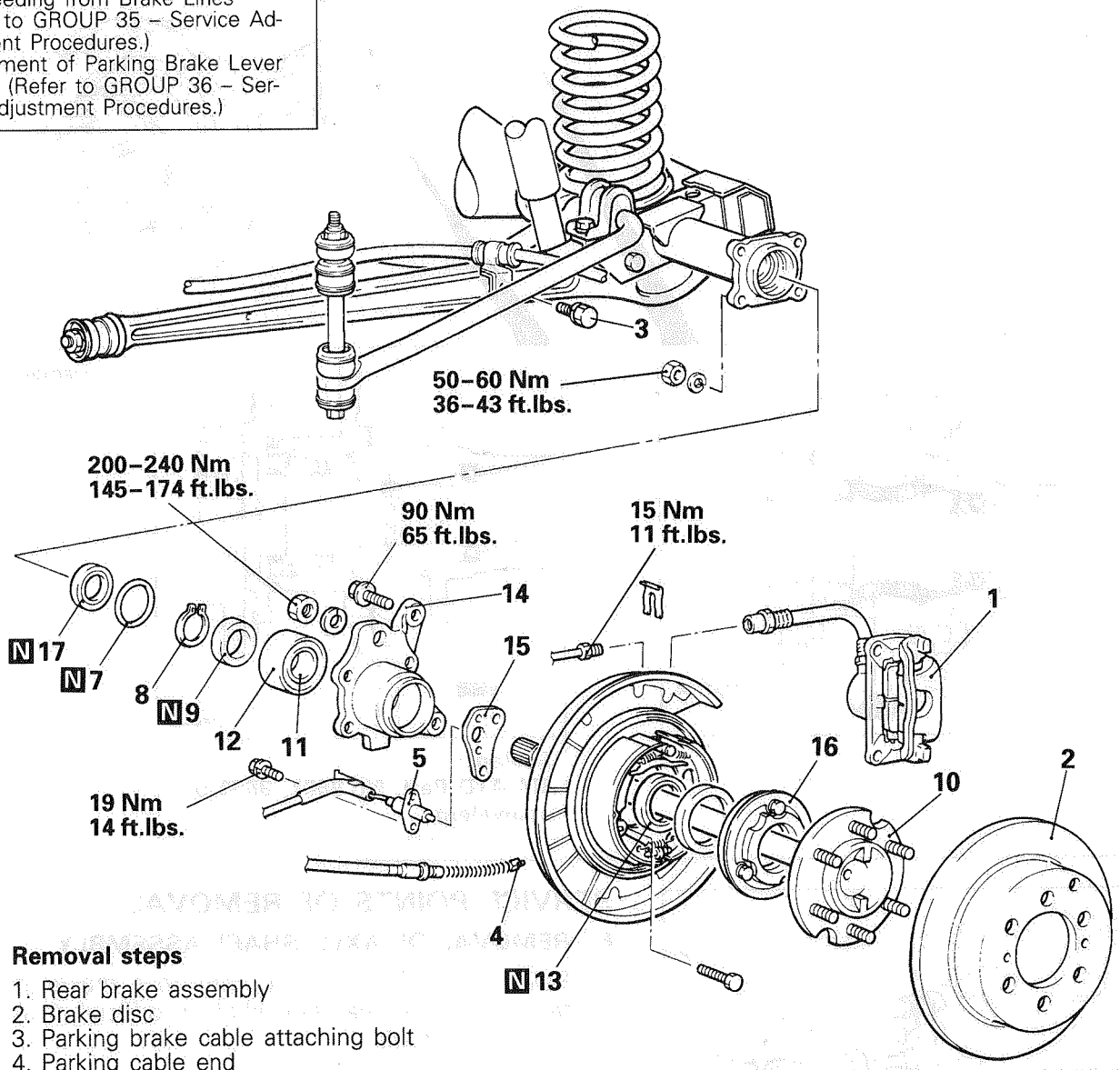

Removal steps

1. Rear brake assembly
2. Brake disc
3. Parking brake cable attaching bolt
4. Parking cable end
5. Speed sensor <Vehicles with ABS> (Refer to GROUP 35 – Wheel Speed Sensor)
6. Axle shaft assembly (parts from step 8 to step 16)
7. O-ring
8. Snap ring
9. Retainer
10. Axle shaft
11. Bearing inner race
12. Bearing outer race
13. Oil seal
14. Bearing case
15. Speed sensor bracket <Vehicles with ABS>
16. Rotor assembly <Vehicles with ABS >
17. Oil seal

LUBRICATION AND SEALING POINTS

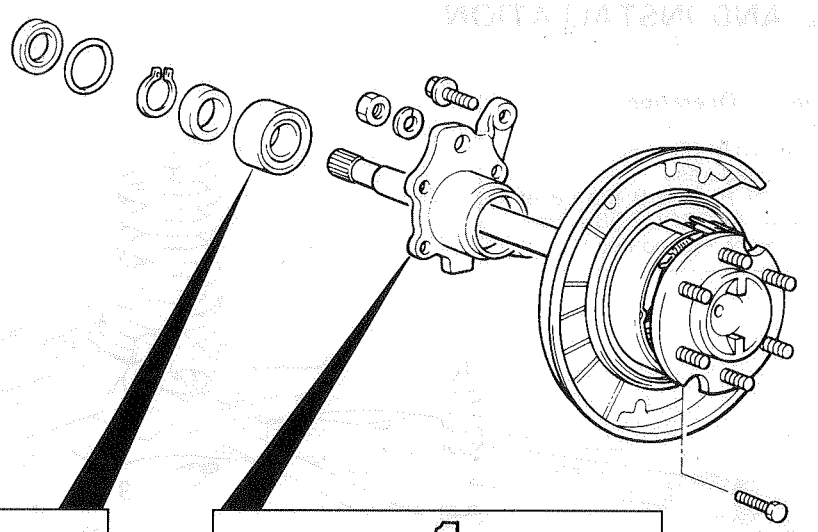

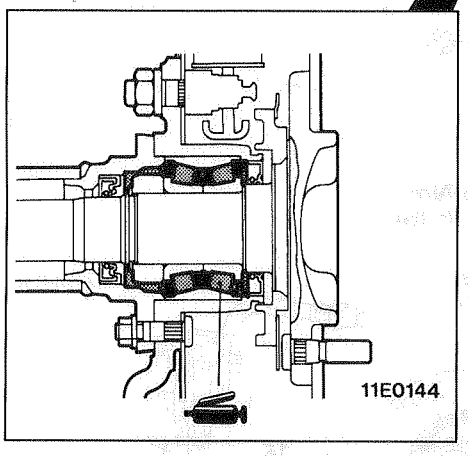

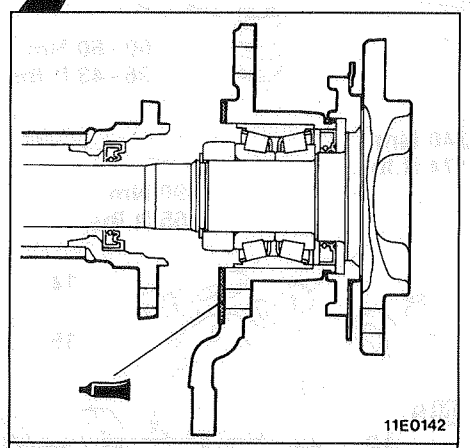

Sealant:
3M ATD Part. No.8661, 8663 or equivalent

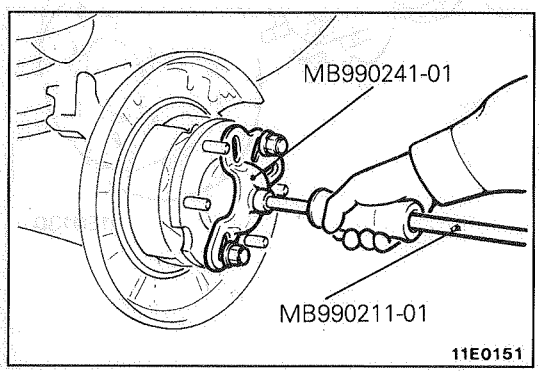

SERVICE POINTS OF REMOVAL M27HBAK

6. REMOVAL OF AXLE SHAFT ASSEMBLY

Pull the rear axle shaft with rear brake assembly attached. If the rear axle shaft is difficult to remove, use the special tools.

NOTE
Do not damage the oil seal during its removal.

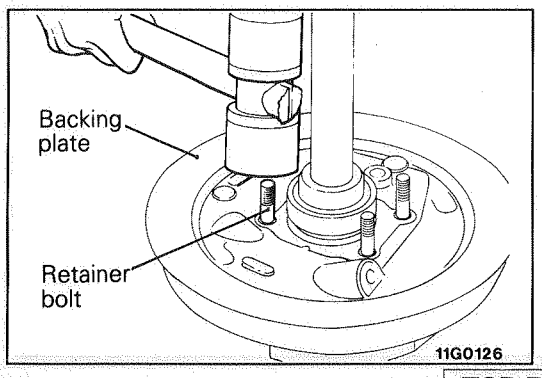

9. REMOVAL OF RETAINER

(1) Remove one retainer bolt from the backing plate.

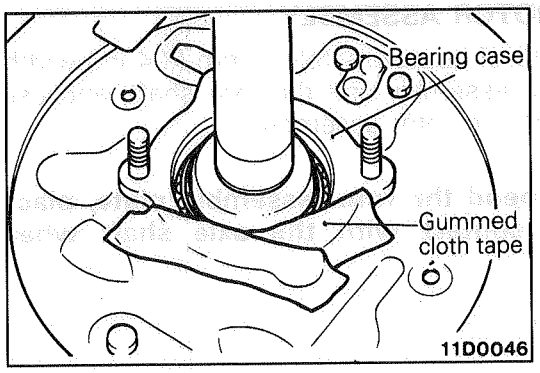

(2) Push down the bearing case all the way to the cover side.
(3) Apply gummed cloth tape around the edge of the bearing case for protection.

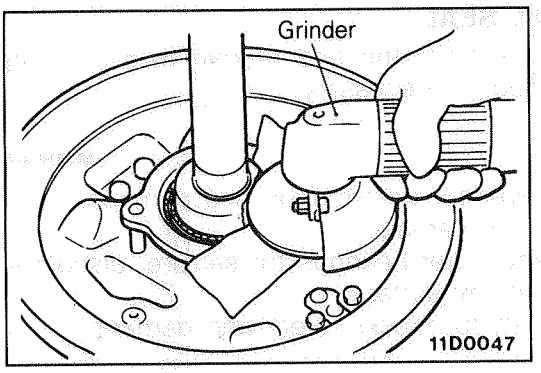

(4) As shown in the figure, fix the axle shaft and shave off with grinder a point of its circumference locally until the wall thickness on the side of axle shaft of retainer ring and the side of bearing become approximately 1.0–2.0 mm (.04–.06 in.) and 2.0 mm (.08 in.) respectively.

Caution
Be careful not to damage the bearing case and the axle shaft.

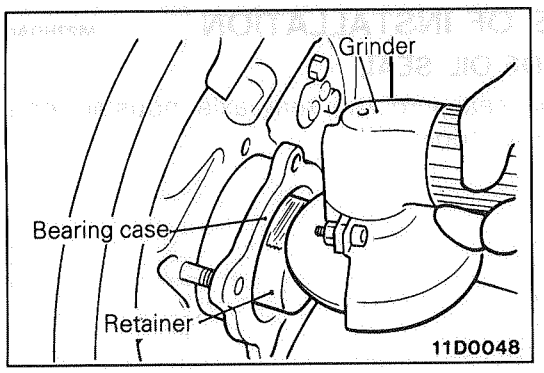

(5) Fix the axle shaft and shave off the remaining 2.0 mm (.08 in.) on the side of the bearing of the retainer.

Caution
Be careful not to damage the bearing case and the axle shaft.

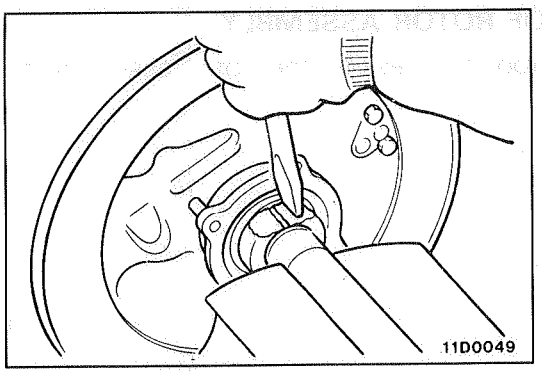

(6) Cut in with a chisel the place where the retainer ring has been shaven and remove the retainer.

Caution
Be careful not to damage the axle shaft.

10. REMOVAL OF REAR AXLE SHAFT

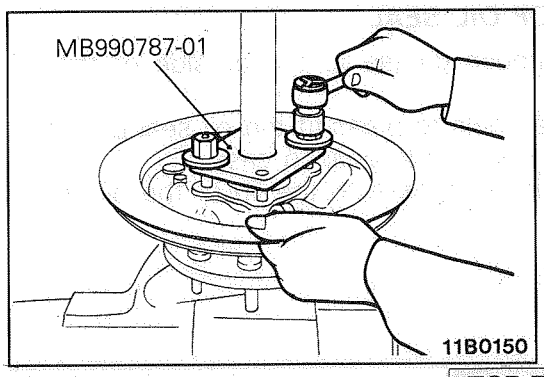

(1) Reinsert lock nut on the axle shaft approximately 3 turns.
(2) Install special tool as shown in the illustration to remove bearing case from the axle shaft. Be sure to install nuts and washers diagonally.
(3) Turn nuts with equal pressure to ensure smooth removal of the wheel bearing.

12. REMOVAL OF BEARING OUTER RACE

Using a hammer and drift, remove bearing outer race from bearing case.

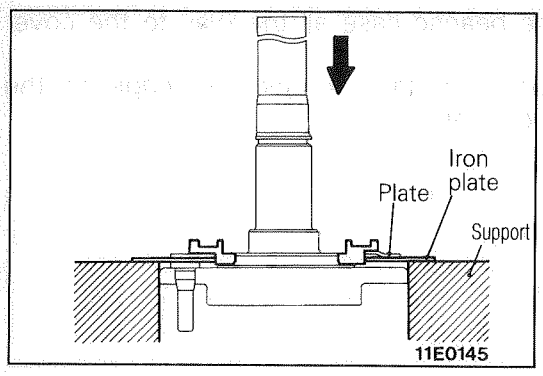

16. REMOVAL OF ROTOR ASSEMBLY

Insert an iron plate of approximately 1 mm (.04 in.) width between the rotor assembly and the axle shaft, and use a press to remove the rotor assembly.

Caution
In order not to bend the rotor assembly plate, place the support in contact with the axle shaft when using the press.

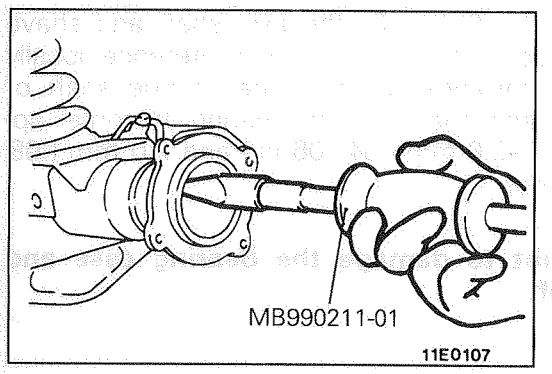

17. REMOVAL OF OIL SEAL

Remove the oil seal from the end of rear axle housing with the special tool, if necessary.

INSPECTION M27HCAA

- Check the dust cover for deformation and damage.
- Check the oil seal for damage.
- Check the inner and outer bearings for seizure, discoloration and rough raceway surface.
- Check the axle shaft for cracks, wear and damage.

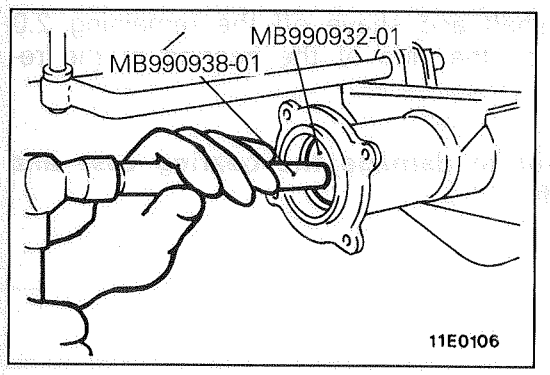

SERVICE POINTS OF INSTALLATION M27HDAN

17. INSTALLATION OF OIL SEAL

Drive the new oil seal into the rear axle housing end by using the special tools.

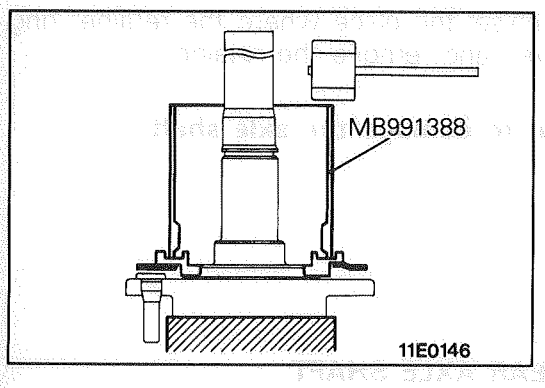

16. INSTALLATION OF ROTOR ASSEMBLY

Use the special tool to press-fit the rotor assembly to the rear axle shaft.

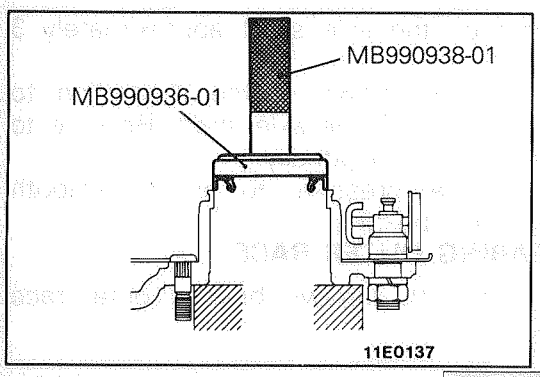

13. INSTALLATION OF OIL SEAL

(1) Apply multi-purpose grease to the outside of the oil seal.
(2) Use the special tools to press-fit the oil seal until it is flush with the end of the bearing case.
(3) Apply multi-purpose grease to the lip of the oil seal.

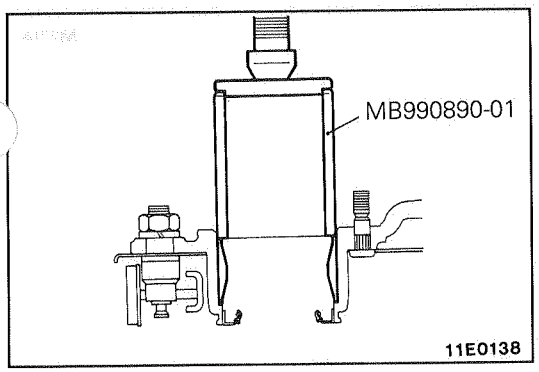

12. INSTALLATION OF BEARING OUTER RACE

(1) Apply the multipurpose grease to the external surface of the bearing outer race.
(2) Press-fit the bearing outer race into the bearing case by using special tools.

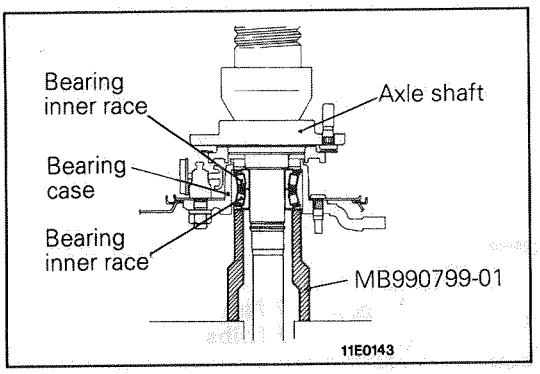

11. INSTALLATION OF BEARING INNER RACE/10. AXLE SHAFT

(1) Pass the axle shaft through the bearing inner race, the bearing case and the second bearing inner race in that order.
(2) Use the special tool to press-fit the bearing inner race to the axle shaft.

Caution
1. **Both bearing inner race sets should be press-fitted together.**
2. **The left and right lengths of the axle shaft are different [approx. 7 mm (.28 in.)] in vehicles with rear differential lock. The right side is longer, so be careful when installing.**

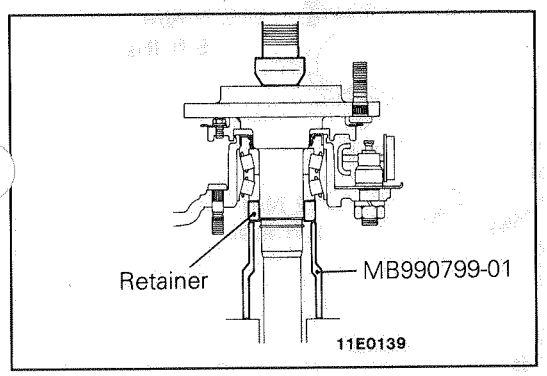

9. PRESS-FITTING OF RETAINER

Use the special tool to press-fit the retainer to the axle shaft, while checking that the press-fitting force is at the standard value.
If the initial press-fitting force is less that the standard value, replace the axle shaft.

Standard value:
Initial press-fitting force
50,000 N (11,023 lbs.) or more
Final press-fitting force
100,000–110,000 N (22,046–24,251 lbs.)

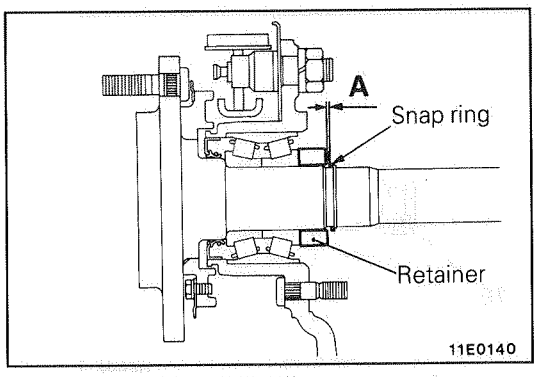

8. INSTALLATION OF SNAP RING

(1) After installing the snap ring, measure the clearance (A) between the snap ring and the retainer with a thickness gage, and check that it is within the standard values.

Standard value (A): 0.166 mm (.0065 in.) or less

(2) If the clearance exceeds the standard value, change the snap ring so that the clearance is at the standard value.

Thickness of snap ring mm (in.)	Identification colour
2.17 (.0854)	–
2.01 (.0791)	Yellow
1.85 (.0728)	Blue
1.69 (.0665)	Purple
1.53 (.0602)	Red

REAR DIFFERENTIAL LOCK

M27IA--

REMOVAL AND INSTALLATION

Pre-removal and post-installation Operation
- Removal and Installation of Rear Seat (Refer to GROUP 52 – Seat.)

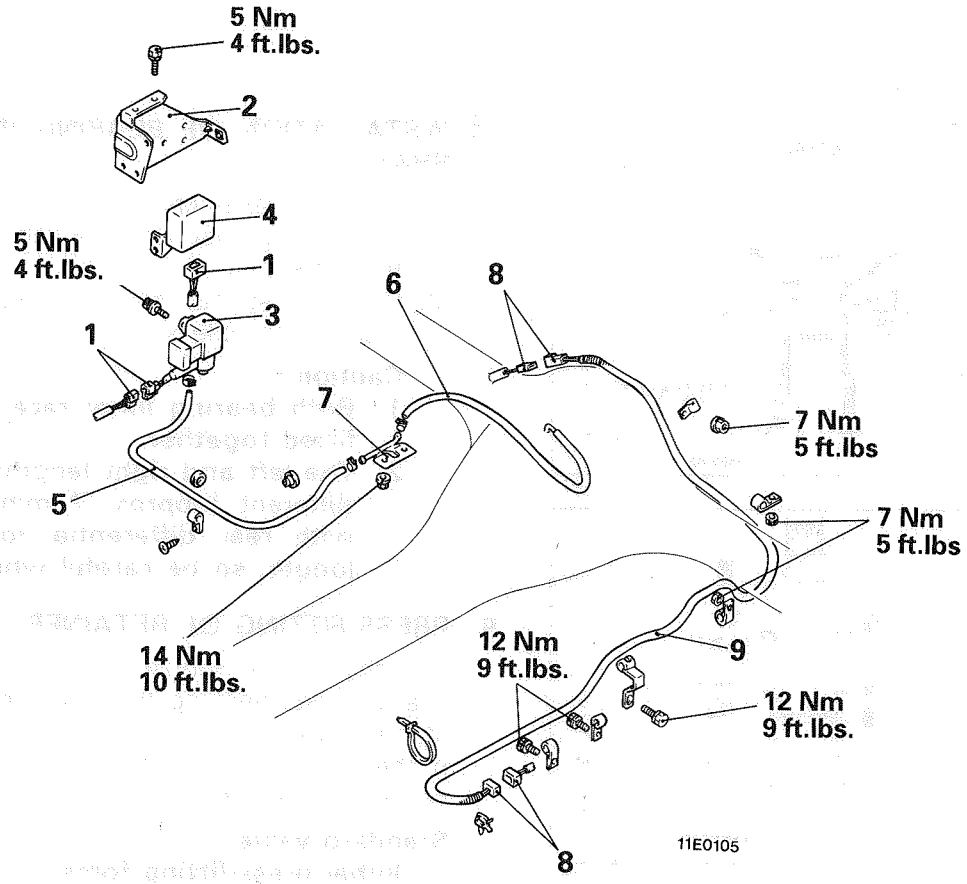

Removal steps of rear differential lock air pump and control unit

1. Harness connector
2. Bracket
3. Rear differential lock air pump
4. Rear differential lock control unit
5. Air hose
6. Air hose
7. Hose bracket
8. Harness connector
9. Position harness

Removal steps of rear differential lock switch

10. Rear differential lock switch

Removal steps of rear differential lock detection switch

11. Rear differential lock detection switch (Refer to P.27-28.)

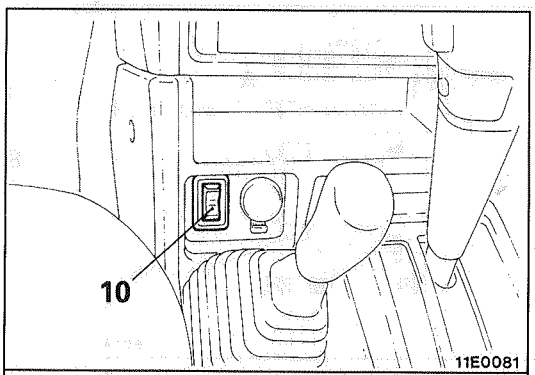

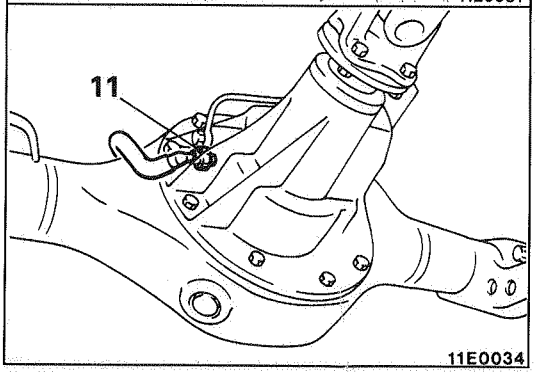

TSB Revision

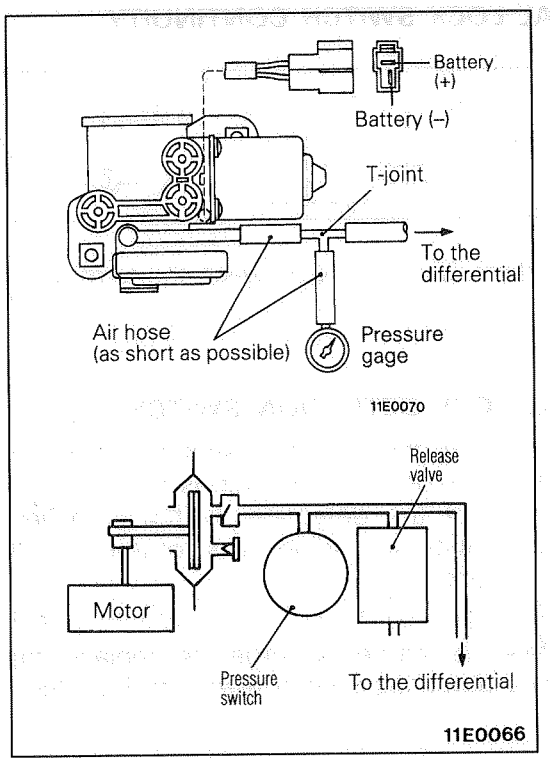

INSPECTION

M27ICAA

REAR DIFFERENTIAL LOCK AIR PUMP

1. Connect the pressure gage to the air pump discharge outlet nozzle, via the air hose and T-joint.
2. Install air hose to the differential.
3. Apply battery voltage to the air pump connector.
4. Measure the time between when the pump starts and stops operating, and if it stops within 5 seconds, the pressure switch inside the pump is normal.
5. Measure the pressure 10–20 seconds after the pump has stopped.

   Standard value: 25–40 kPa (4–6 psi.)

   If the pressure is within the standard value, the release valve inside the pump is normal.
6. Check that the pump does not begin operating for 5 minutes after it has stopped.
7. If the inspection for 4–6 is normal, then the pump is fully operational.

REAR DIFFERENTIAL LOCK CONTROL UNIT

1. Measure the terminal voltages under each condition.
2. With the control unit connected to the harness and the probe inserted into the rear of the harness connector, carry out the voltage measurements between terminal ⑥ (ground terminal) and each other terminal.

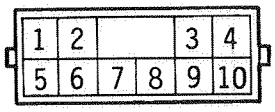

Terminal No.	Inspection Item		Condition		Terminal Voltage
3	Ignition switch (IG1)		Ignition switch (IG1)	OFF	0 V
				ON	System voltage
9	Rear differential lock switch	ON side	Ignition switch: ON	ON side or OFF side	0 V
1		OFF side		When in neutral	System voltage
10	Rear differential lock indicator light		Ignition switch: ON	Rear differential is locked	0 V
				Rear differential is free	System voltage
2	Vehicle speed reed switch		Select "D" or "1" (1st gear) and drive forward slowly.		5 V
8	Rear differential lock detection switch		Ignition switch: ON	Rear differential is locked	0 V
				Rear differential is free	System voltage
4	Rear differential lock air pump		Ignition switch: ON	When filling or holding	System voltage
				When releasing	0 V
5	Center differential lock switch		Ignition switch: ON	Center differential is free	System voltage
				Center differential is locked	0 V

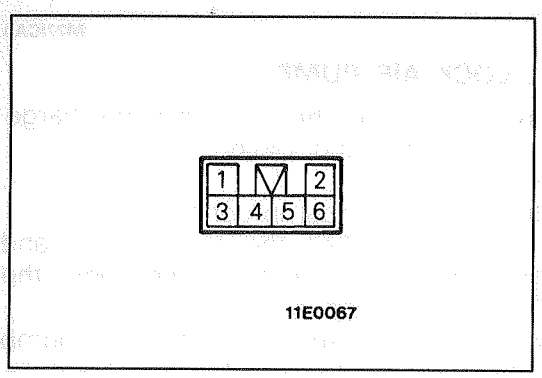

REAR DIFFERENTIAL LOCK SWITCH CONTINUITY

Switch position \ Terminal	5	3	2	6	1
ON	○		○	○	○
OFF		○	○		

NOTE
• ○—○ indicates that there is continuity between the terminals.

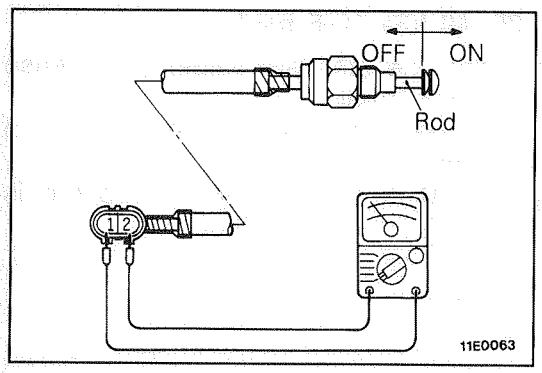

REAR DIFFERENTIAL LOCK DETECTION SWITCH

1. Connect an ohmmeter to the detection switch connector.
2. The rear differential lock detection switch is in good condition when the rod of the detection switch is pulled, there should be continuity, and when it is returned to its normal position, no continuity.

   NOTE
   Remove the differential carrier in order to replace the rear differential lock detection switch (Refer to P.27-28).

DIFFERENTIAL CARRIER

REMOVAL AND INSTALLATION

M27IA--

Pre-removal Operation
- Draining of Differential Gear Oil

Post-installation Operation
- Air Bleeding from Brake Lines (Refer to GROUP 35 – Service Adjustment Procedures.)
- Adjustment of Parking Brake Lever Stroke (Refer to GROUP 36 – Service Adjustment Procedures.)
- Filling of Differential Gear Oil (Refer to P.27-12.)

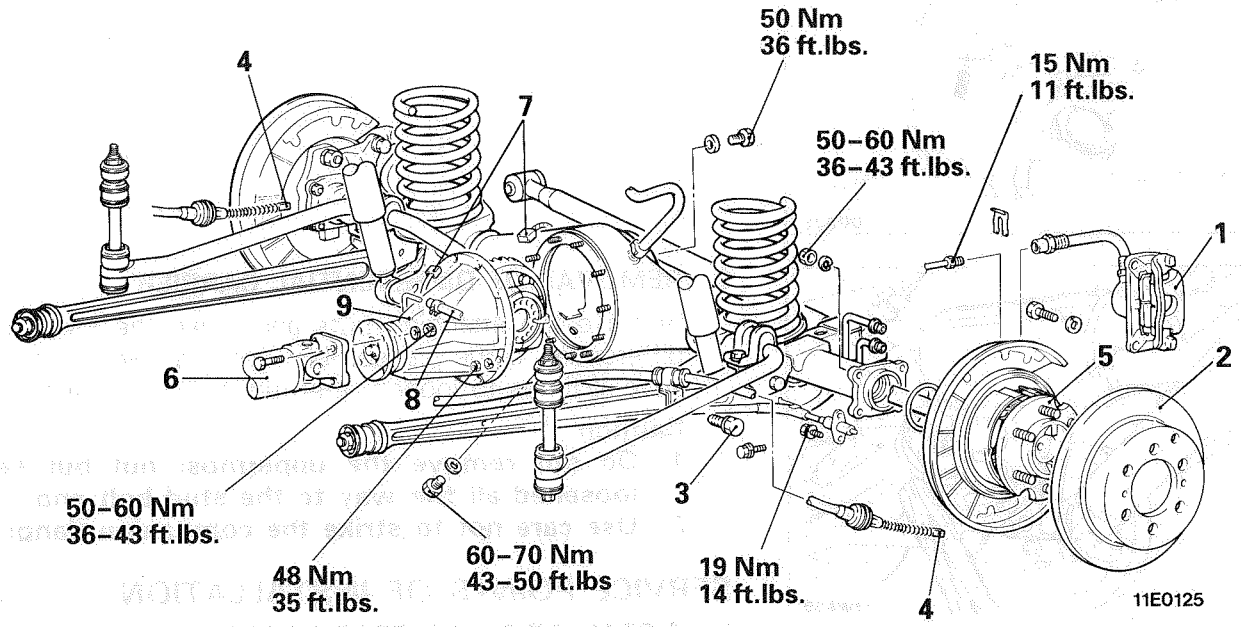

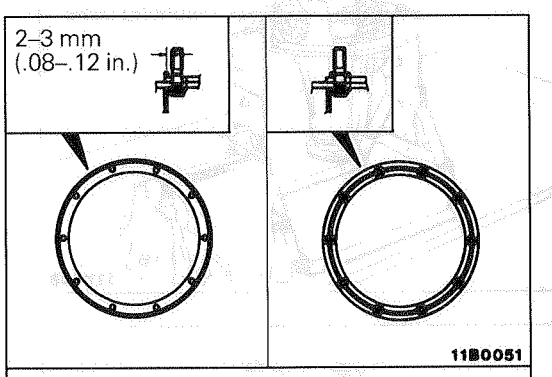

Sealant:
3M ATD Part No. 8661, 8663 or equivalent

NOTE
Apply the specified sealant to the differential carrier mounting surface of the axle housing as illustrated in either of the illustrations.

Removal steps

1. Rear brake assembly
2. Brake disc
3. Parking brake cable attaching nut
4. Parking brake cable end
5. Rear axle shaft assembly
6. Rear propeller shaft
7. Rear differential lock position harness connector
8. Hose connection <Vehicles with rear differential lock>
9. Differential carrier

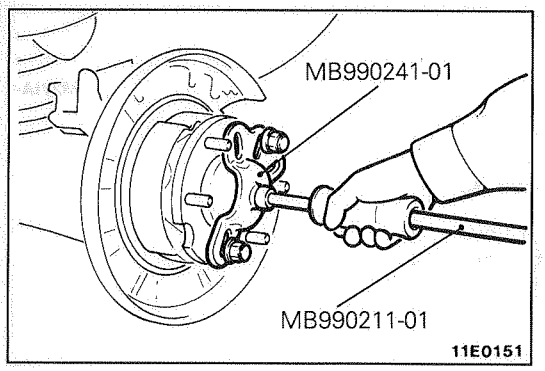

SERVICE POINTS OF REMOVAL M27IBAJ

5. REMOVAL OF REAR AXLE SHAFT ASSEMBLY

Pull out the right and left axle shafts by about 70 mm (3 in.). If it is difficult to pull out, use the special tools.

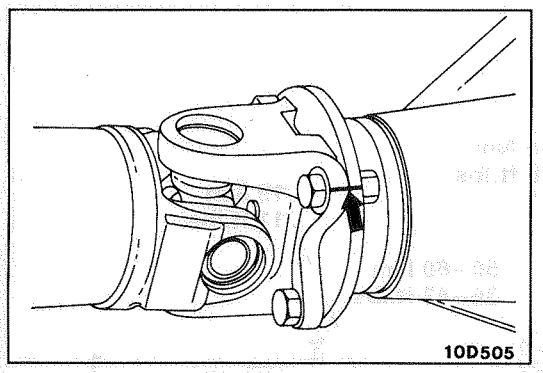

6. REMOVAL OF REAR PROPELLER SHAFT

Make the mating marks on the flange yoke of the rear propeller shaft and the companion flange of the differential case.

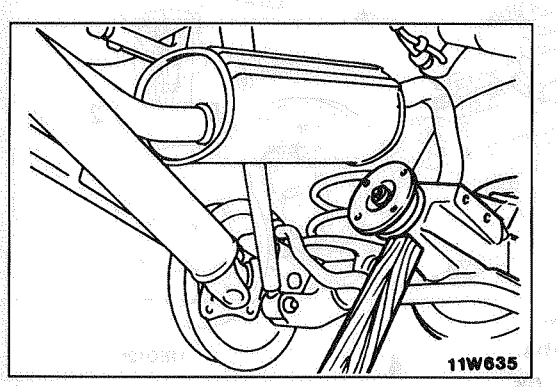

9. REMOVAL OF DIFFERENTIAL CARRIER

Remove the attaching nuts and strike the lower part of differential carrier assembly with a piece of timber several times to loosen, then remove the assembly.

Caution

1. **Do not remove the uppermost nut but keep it loosened all the way to the stud bolt end.**
2. **Use care not to strike the companion flange.**

SERVICE POINTS OF INSTALLATION M27IDAJ

6. INSTALLATION OF REAR PROPELLER SHAFT

Align the mating marks on the flange yoke and the companion flange to install the rear propeller shaft.

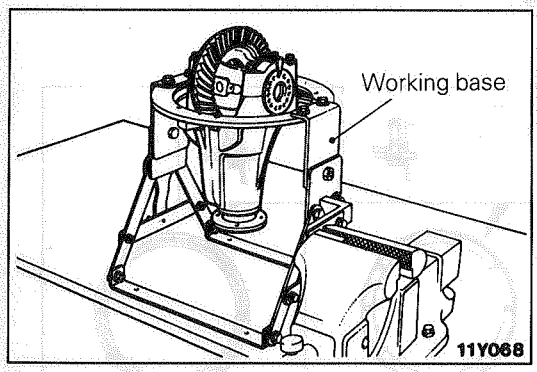

INSPECTION BEFORE DISASSEMBLY M27IEAA

Hold the working base in a vice, and install the differential carrier to the special tool.

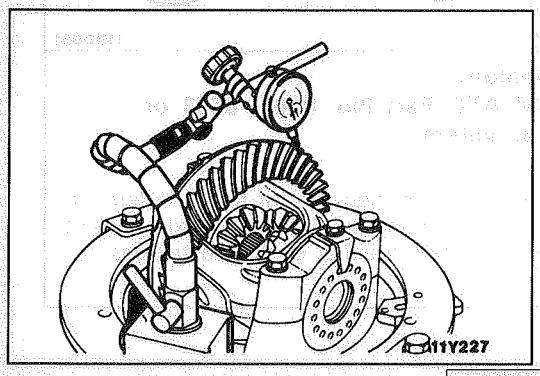

FINAL DRIVE GEAR BACKLASH

With the drive pinion locked in place, measure the final drive gear backlash with a dial indicator on the drive gear.

NOTE
Measure at four points or more on the circumference of the drive gear.

Standard value: 0.13–0.18 mm (.0051–.0071 in.)

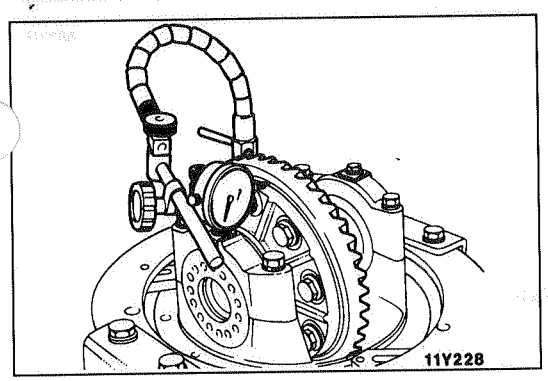

DRIVE GEAR RUNOUT

Measure the drive gear runout at the shoulder on the reverse side of the drive gear.

Limit: 0.05 mm (.0019 in.)

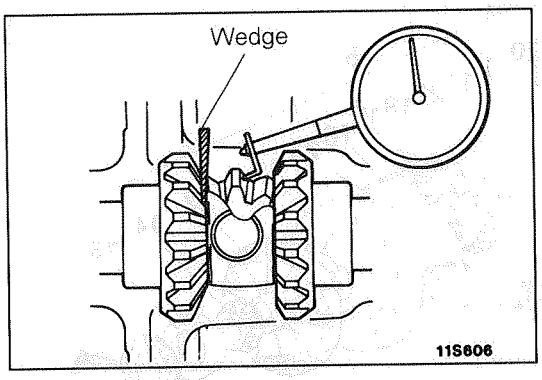

DIFFERENTIAL GEAR BACKLASH (EXCEPT LIMITED SLIP DIFFERENTIAL)

While locking the side gear with the wedge, measure the differential gear backlash with a indicator on the pinion gear.

Standard value: **0.076 mm (.003 in.) or less**
Limit: **0.2 mm (.0079 in.)**

FINAL DRIVE GEAR TOOTH CONTACT

Refer to GROUP 26 – Differential Carrier.

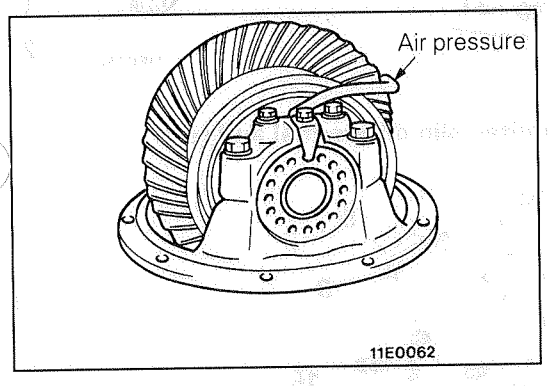

REAR DIFFERENTIAL LOCK

1. Connect an air hose, pressure gage and air regulator, for adjusting the compressed air pressure, to the actuator pipe.
2. Adjust the compressed air pressure with the air regulator until the pressure gage shows a pressure of approx. 25 kPa (4 psi.).

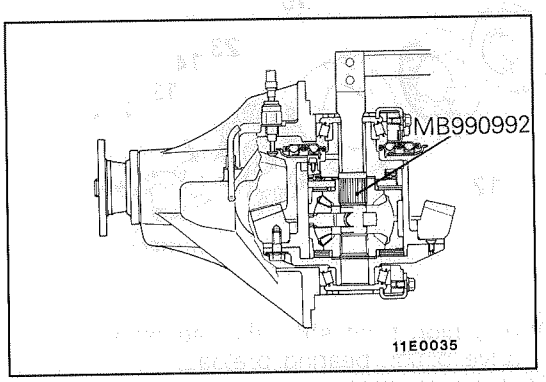

3. Use the special tool to gently turn only the side gear of one side of the axle 1/4–1/2 turns.

   NOTE
   1. The lock will not operate when both side gears turn together, even when air pressure is supplied. The side gear on one side of the axle must be turned so that the clutch will mesh (lock).
   2. To unlock, shut supply of air pressure, and gently turn the side gear on one side of the axle 1/4–1/2 turns.

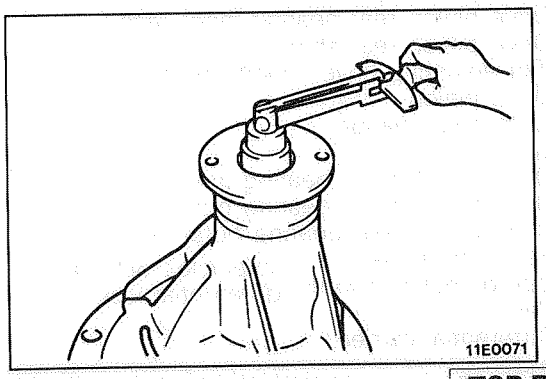

4. Measure the rotation torque of the companion flange, and check the lock condition and free condition of the rear differential.

Rear differential operation	Companion flange Nm (ft.lbs.) [N (lbs)]
Locked	Doesn't turn at 50 (36) [1,111 (248)]
Free	Turns at less than 50 (36) [1,111 (248)]

DISASSEMBLY

M27IF--

Inspection Before Disassembly
(1) Inspection of Final Drive Gear Inspection (Refer to P.27-26.)
(2) Inspection of Drive Gear Run-out (Refer to P.27-27.)
(3) Inspection of Differential Gear Backlash (Refer to P.27-27.)
(4) Inspection of Final Drive Gear Tooth Contact (Refer to P.27-27.)

<Conventional differential>

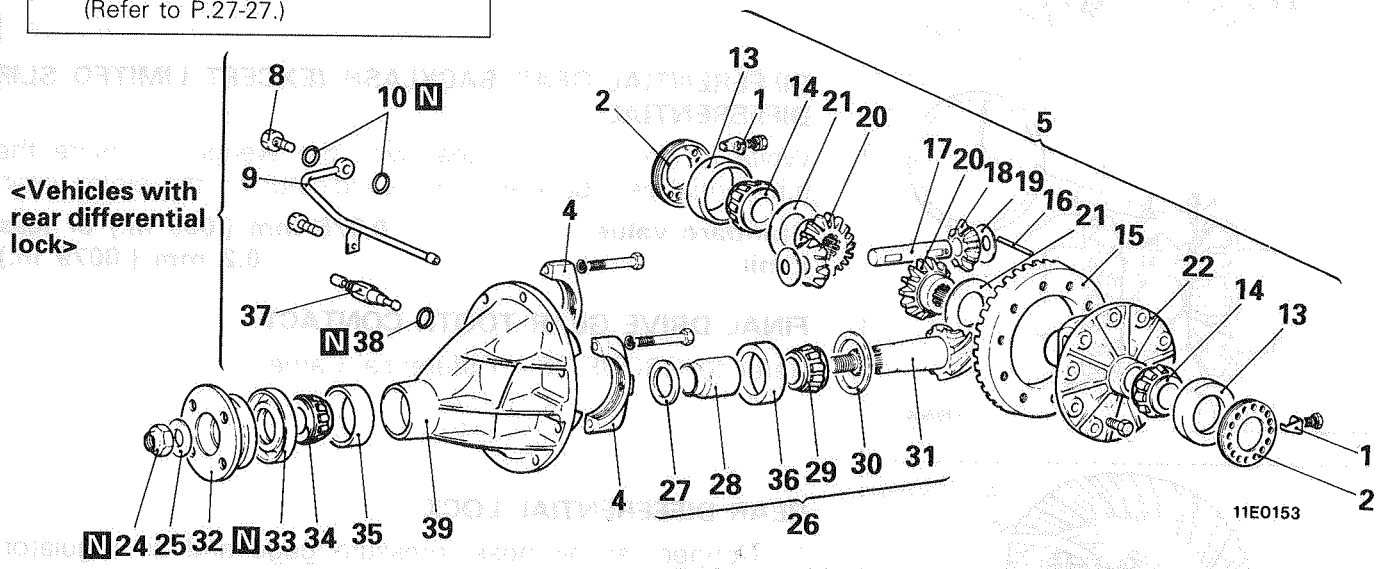

<Vehicles with rear differential lock>

<Vehicles with limited slip differential and rear differential lock>

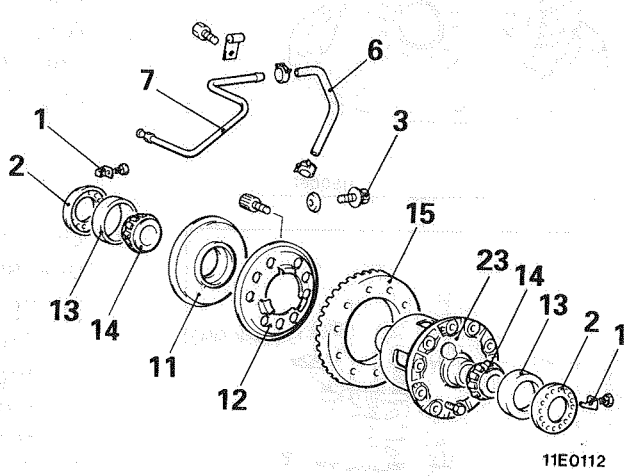

Disassembly steps

- 1. Lock plate
- ◆◆ 2. Side bearing nut
- 3. Bolt
- 4. Bearing cap
- ◆◆ 5. Differential case assembly
- 6. Hose
- 7. Air pipe assembly (A)
- 8. Eye bolt
- 9. Air pipe assembly (B)
- 10. Gasket
- 11. Actuator assembly
- 12. Pressure plate

<Vehicles with rear differential lock>

- 13. Side bearing outer race
- ◆◆ 14. Side bearing inner race
- ◆◆ 15. Drive gear
- ◆◆ 16. Lock pin
- 17. Pinion shaft
- 18. Pinion gear
- 19. Pinion washer
- 20. Side gear
- 21. Side gear spacer
- 22. Differential case
- 23. Differential case (Refer to P.27-39)
- ◆◆ 24. Self-locking nut
- 25. Washer
- ◆◆ 26. Drive pinion assembly
- 27. Drive pinion front shim (For adjusting of drive pinion bearing preload)
- 28. Drive pinion spacer
- ◆◆ 29. Drive pinion rear bearing inner race
- 30. Drive pinion rear shim (For adjusting drive pinion height)
- 31. Drive pinion
- 32. Companion flange
- ◆◆ 33. Oil seal
- ◆◆ 34. Drive pinion front bearing inner race
- ◆◆ 35. Drive pinion front bearing outer race
- ◆◆ 36. Drive pinion rear bearing outer race
- 37. Rear differential lock detection switch
- 38. Gasket
- 39. Differential carrier

<Vehicles with rear differential lock>

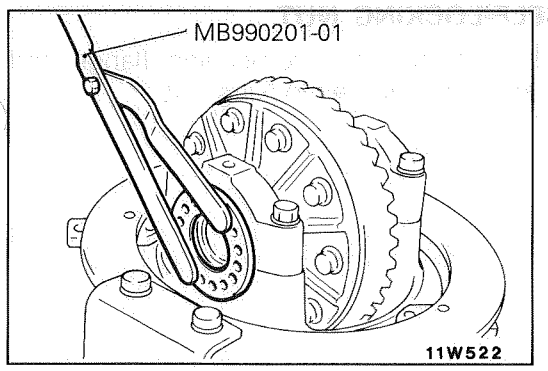

SERVICE POINTS OF DISASSEMBLY M27IGAG

2. REMOVAL OF SIDE BEARING NUT

Using the special tool, remove the side bearing nut.

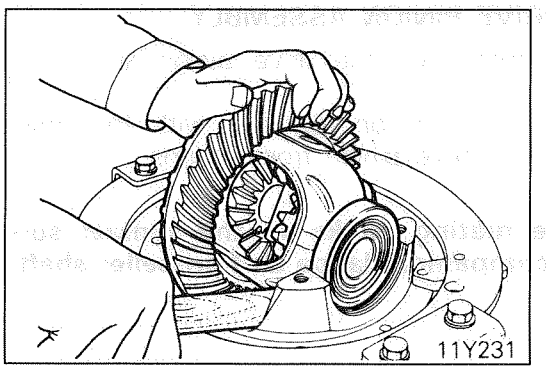

5. REMOVAL OF DIFFERENTIAL CASE ASSEMBLY

Take out the differential case assembly with hammer handles.

NOTE

Make mating marks on the bearings.

Keep the right and left side bearings and side bearing nuts separate, so that they do not become mixed at the time of reassembly.

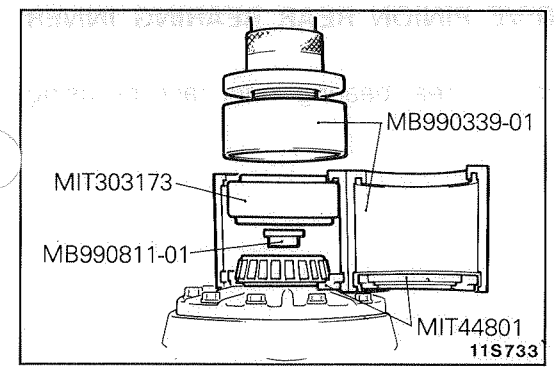

14. REMOVAL OF SIDE BEARING INNER RACE

Using the special tools, pull off the side bearing inner races.

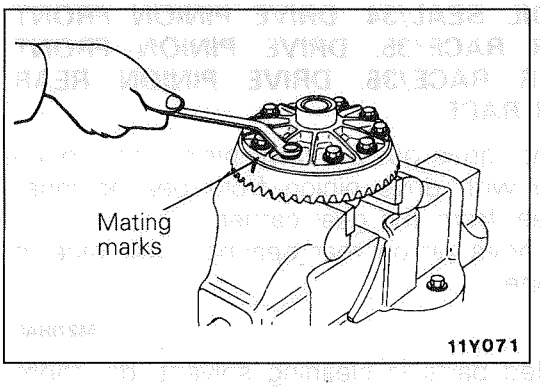

15. REMOVAL OF DRIVE GEAR

(1) Make mating marks on the differential case and the drive gear.

(2) Loosen the drive gear attaching bolts in diagonal sequence to remove the drive gear.

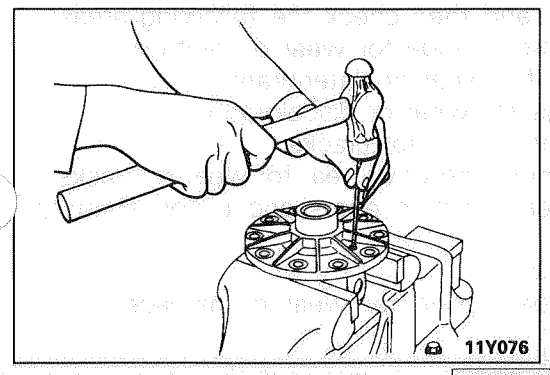

16. REMOVAL OF LOCK PIN

Drive out the lock pin with a punch.

NOTE

The location of the removed side gears and side gear thrust spacers, left and right, should be retained for reassembly.

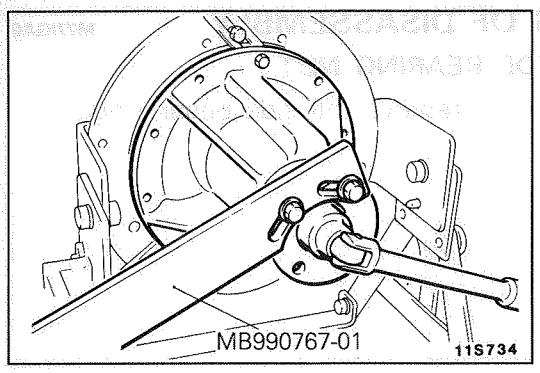

24. REMOVAL OF SELF-LOCKING NUT

Use the special tool to hold the companion flange and remove the companion flange self-locking nut.

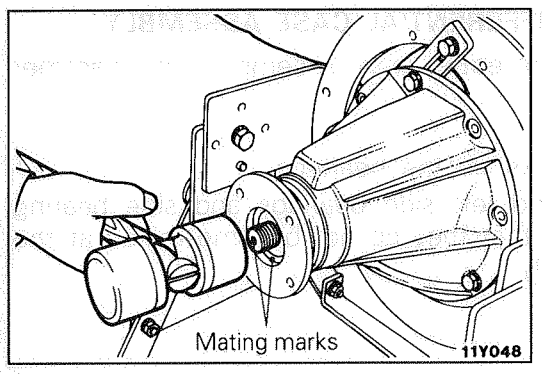

26. REMOVAL OF DRIVE PINION ASSEMBLY

(1) Make mating marks on the drive pinion and companion flange.
(2) Drive out the drive pinion together with the drive pinion spacer and drive pinion front shims.

Caution
Do not make mating marks on the contact surfaces of the companion flange and propeller shaft.

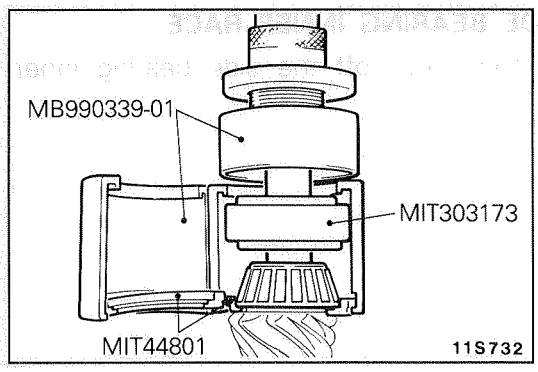

29. REMOVAL OF DRIVE PINION REAR BEARING INNER RACE

Pull out the drive pinion rear bearing inner race by using the special tools.

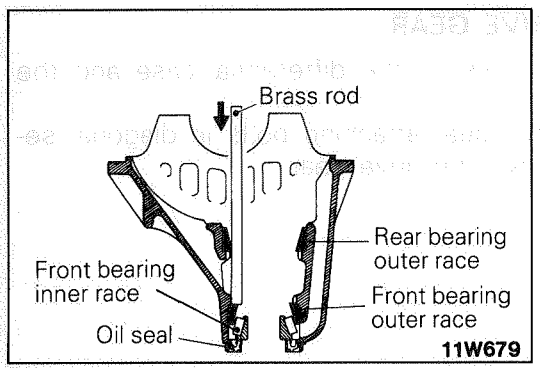

33. REMOVAL OF OIL SEAL/34. DRIVE PINION FRONT BEARING INNER RACE/35. DRIVE PINION FRONT BEARING OUTER RACE/36. DRIVE PINION REAR BEARING OUTER RACE

(1) Use a brass rod, drive out the drive pinion front bearing outer race with drive pinion front bearing inner race and oil seal from the gear carrier.
(2) Drive out the drive pinion rear bearing outer race in the same manner.

INSPECTION M27IHAC

Wash the disassembled parts in cleaning solvent, dry them using compressed air, and then check the following areas:

- Check the companion flange for wear or damage.
- Check the oil seal for wear or deterioration.
- Check the bearings for wear or discoloration.
- Check the differential case for cracks.
- Check the drive pinion and drive gear for wear or cracks.
- Check the side gears, pinion gears and pinion shaft for wear or damage.
  <conventional type>
- Check the side gear spline for wear or damage. <conventional type>

REASSEMBLY

M27II--

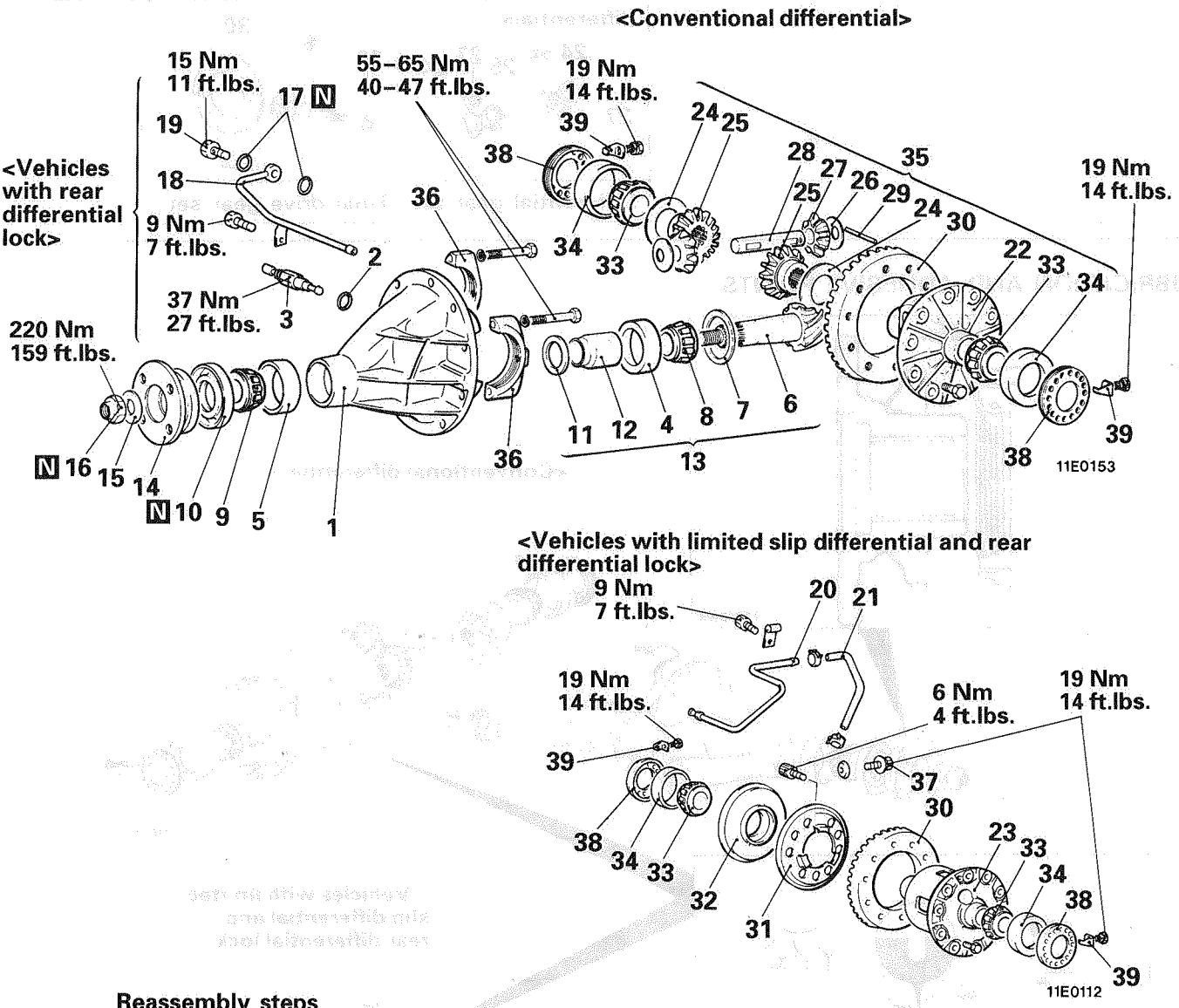

Reassembly steps

1. Differential carrier
2. Gasket
3. Rear differential lock detection switch
4. ◆◆ Drive pinion rear bearing outer race
5. ◆◆ Drive pinion front bearing outer race
6. ◆◆ • Adjustment of drive pinion height
7. Drive pinion
8. Drive pinion rear shim (For adjusting drive pinion height)
9. Drive pinion rear bearing inner race
10. Drive pinion front bearing inner race
11. Oil seal
12. Drive pinion front shim (For adjusting drive pinion bearing preload)
13. Drive pinion spacer
14. ◆◆ • Adjustment of drive pinion bearing preload
15. Drive pinion assembly
16. Companion flange
17. Washer
18. Self-locking nut
19. Gasket
20. Air pipe assembly (B)
21. Eye bolt
22. Air pipe assembly (A)
23. Hose
24. Differential case
25. Differential case (Refer to P.27-39)
26. Side gear spacer
27. Side gear
28. Pinion washer
29. Pinion gear
30. ◆◆ • Adjustment of differential gear backlash
31. Pinion shaft
32. ◆◆ Lock pin
33. ◆◆ Drive gear
34. Pressure plate
35. Actuator assembly
36. ◆◆ Side bearing inner race
37. Side bearing outer race
38. Differential case assembly
39. ◆◆ Bearing cap
40. ◆◆ • Adjustment of final drive gear backlash
41. Bolt
42. Side bearing nut
43. Lock plate

<Conventional differential>	
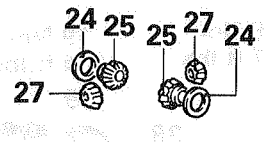	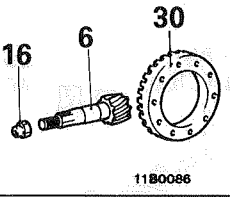
Differential gear set	Final drive gear set

LUBRICATION AND ADHESIVE POINTS

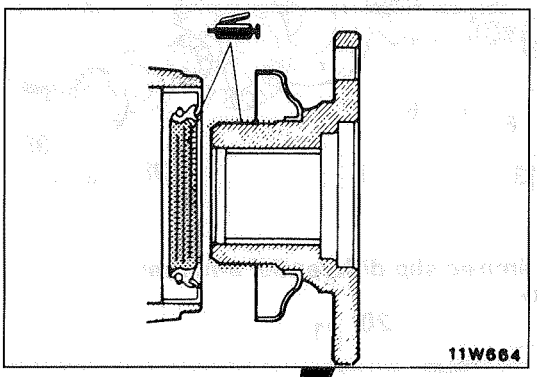

<Conventional differential>

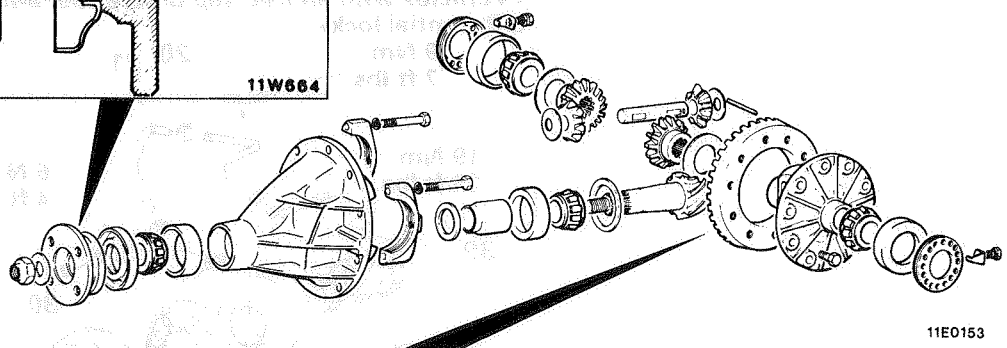

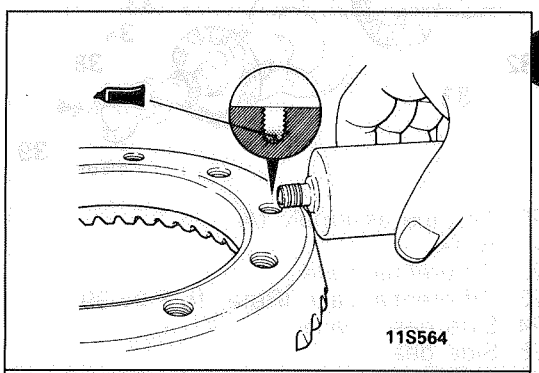

Adhesive:
3M Stud Locking 4170 or equivalent

<Vehicles with limited slip differential and rear differential lock>

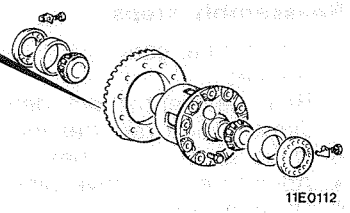

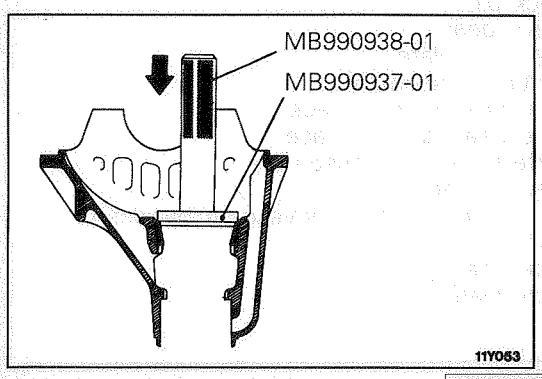

SERVICE POINTS OF REASSEMBLY M27IJAE

4. PRESS-FITTING OF DRIVE PINION REAR BEARING OUTER RACE

Press-fit the drive pinion rear bearing outer race into the gear carrier by using special tools.

Caution
Bearing outer race must be fitted by a press to avoid tilt and distortion.

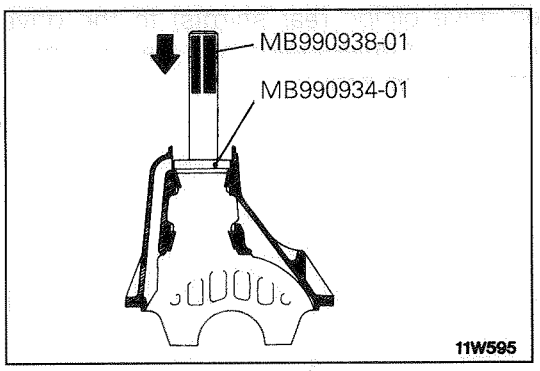

5. INSTALLATION OF DRIVE PINION FRONT BEARING OUTER RACE

Press-fit the drive pinion front bearing outer race into gear carrier by using special tools.

Caution
Bearing outer race must be fitted by a press to avoid tilt and distortion

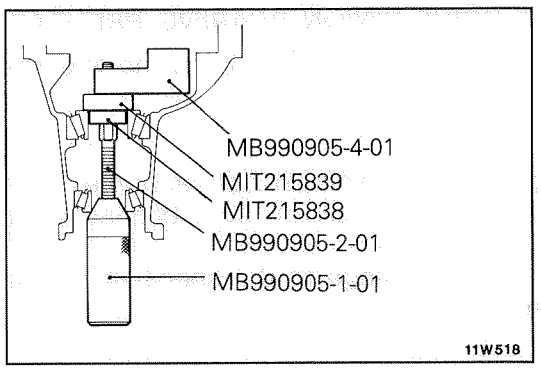

• ADJUSTMENT OF DRIVE PINION HEIGHT

Adjust the drive pinion height by the following procedures:

(1) Install special tools and drive pinion front and rear bearing inner races to the gear carrier in the sequence shown in the illustration.

(2) Tighten the handle on the special tool until standard value of drive pinion turning torque is obtained.

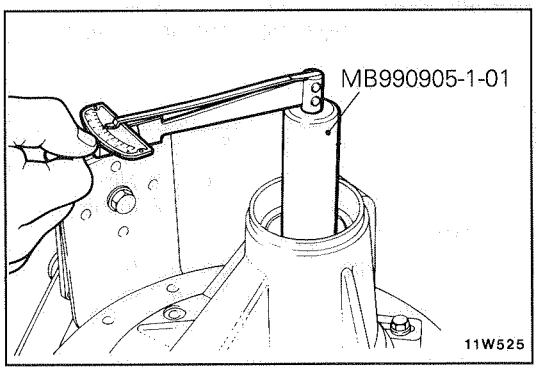

(3) Measure the drive pinion turning torque (without the oil seal).

Standard value:

Bearing division	Bearing lubrication	Rotation torque
New	None (With anti-rust agent)	0.6–0.9 Nm 5.2–7.8 in.lbs.
New/reusing	Gear oil applied	0.4–0.5 Nm 3.5–4.3 in.lbs.

NOTE
1. Gradually tighten the handle of the special tool while checking the drive pinion turning torque.
2. Because one rotation cannot be made when the special tool is in contact with the gear carrier, move it a few times and, after seating the bearing, measure the rotation torque.

(4) Position the special tool in the side bearing seat of the gear carrier, then select a drive pinion rear shim of a thickness which corresponds to the gap between the special tools.

NOTE
Thoroughly clean the side bearing seat.
When positioning the special tool, be sure that the cutout sections of the special tool are in the position shown in the illustration, and also confirm that the special tool is in close contact with the side bearing seat.
When selecting the drive pinion rear shims, keep the number of shims to a minimum.

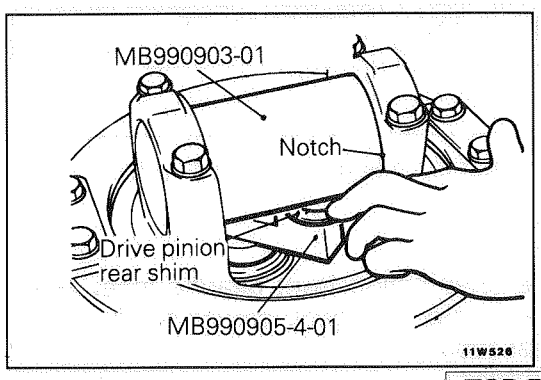

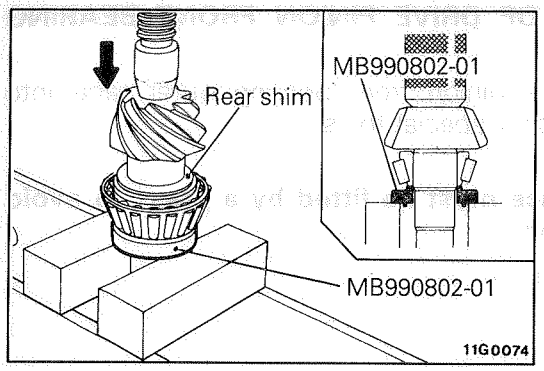

(5) Fit the selected drive pinion rear shim(s) to the drive pinion, and press-fit the drive pinion rear bearing inner race by using the special tool.

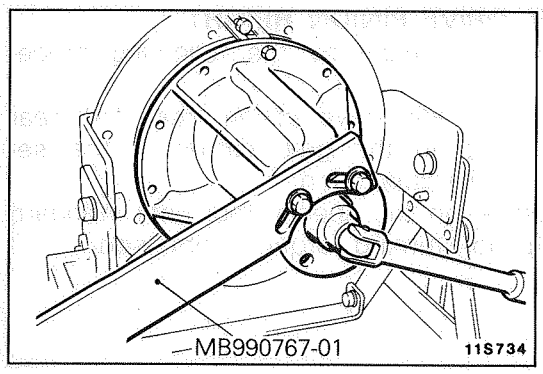

• ADJUSTMENT OF DRIVE PINION BEARING PRELOAD

Adjust the drive pinion turning torque by using the following procedure:

Without oil seal

(1) Fit the drive pinion front shim(s) between the drive pinion spacer and the drive pinion front bearing inner race.

(2) Tighten the companion flange to the specified torque by using the special tools.

NOTE
Do not install the oil seal.

(3) Measure the drive pinion bearing preload. (without the oil seal)

Standard value:

Bearing division	Bearing lubrication	Rotation torque
New	None (With anti-rust agent)	0.6–0.9 Nm 5.2–7.8 in.lbs.
New/reused	Gear oil applied	0.4–0.5 Nm 3.5–4.3 in.lbs.

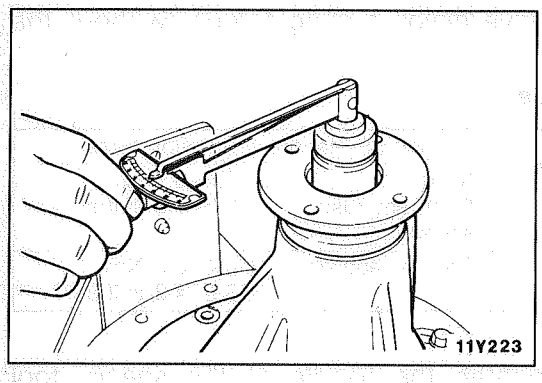

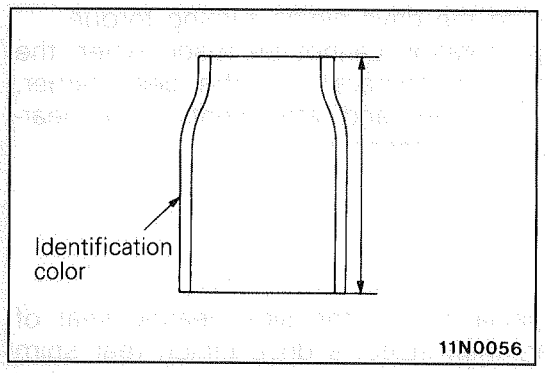

(4) If the drive pinion turning torque is not within the range of the standard value, adjust the turning torque by replacing the drive pinion front shim(s) or the drive pinion spacer.

NOTE
When selecting the drive pinion front shims, if the number of shims is large, reduce the number of shims to a minimum by selecting the drive pinion spacers.
Also, select the drive pinion spacer from the following two types.

Height of drive pinion spacer mm (in.)	Identification color
56.67 (2.231)	–
57.01 (2.244)	White

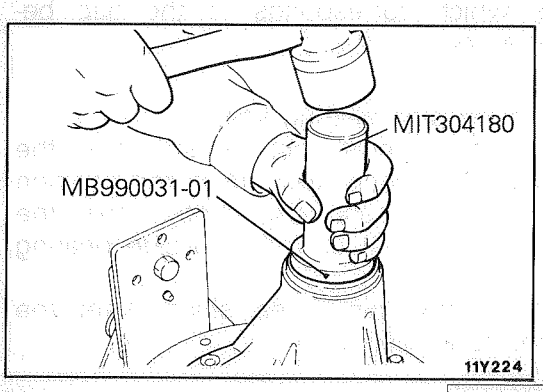

(5) Remove the companion flange and drive pinion once again.

With oil seal

(1) After setting the drive pinion front bearing inner race, drive the oil seal into the gear carrier front lip by using the special tool.

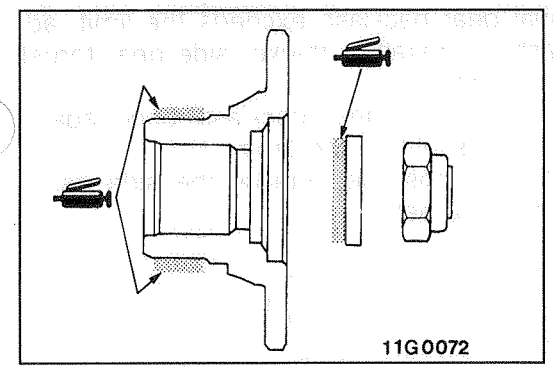

(2) Apply a thin coat of clean multipurpose grease to the companion flange contacting surface of the washer and oil seal contacting surface before installing drive pinion assembly.

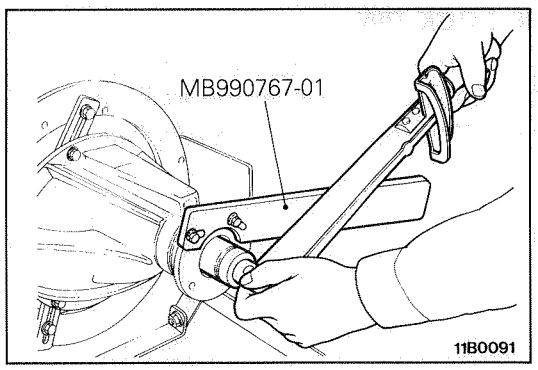

(3) Install the drive pinion assembly and companion flange with mating marks properly aligned, and tighten the companion flange self-locking nut to the specified torque by using the special tools.

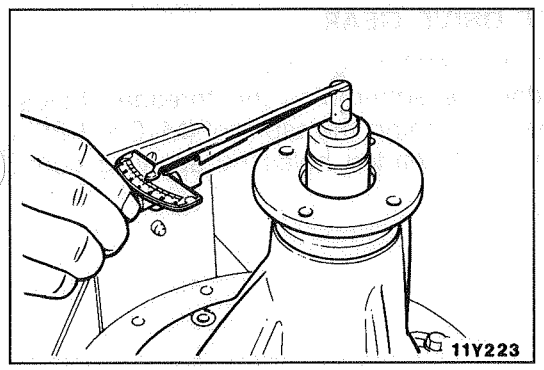

(4) Measure the drive pinion turning torque (with oil seal) to verify that the drive pinion bearing preload complies with the standard value.

Standard value:

Bearing division	Bearing lubrication	Rotation torque
New	None (With anti-rust agent)	0.85–1.15 Nm 7.4–10.0 in.lbs.
New/reusing	Gear oil applied	0.65–0.75 Nm 5.6–6.5 in.lbs.

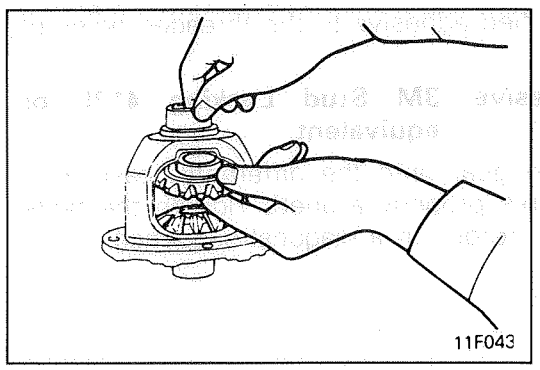

• ADJUSTMENT OF DIFFERENTIAL GEAR BACKLASH

Adjust the differential gear backlash by the following procedure.

(1) Assemble the side gears, side gear thrust spacers, pinion gears, and pinion washers into the differential case.

(2) Temporarily install the pinion shaft.

NOTE
Do not assemble the thrust block and lock pin yet.

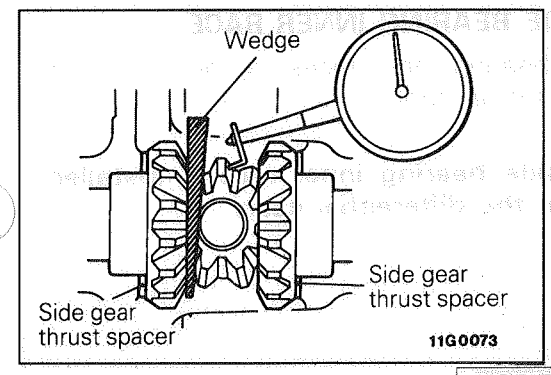

(3) Insert a wedge between the side gear and the pinion shaft to lock the side gear.

(4) While locking the side gear with the wedge, measure the differential gear backlash with a dial indicator on the pinion gear.

Standard value:
0.076 mm (.0030 in.) or less

Limit:
0.2 mm (.0079 in.)

NOTE
Measure both pinion gears.

(5) If the differential gear backlash exceeds the limit, adjust the backlash by installing thicker side gear thrust spacers on both sides.
(6) Measure the differential gear backlash once again, and confirm that it is within the limit.
If adjustment is not possible, replace the side gears and pinion gears as a set.

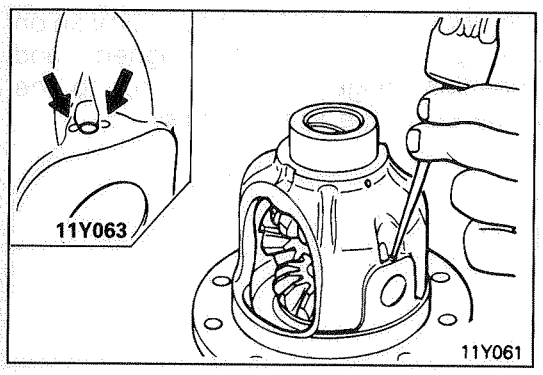

29. INSTALLATION OF LOCK PIN

(1) Align the pinion shaft lock pin hole with the differential case lock pin hole, and drive in the lock pin.
(2) Stake the lock pin with a punch at two points.

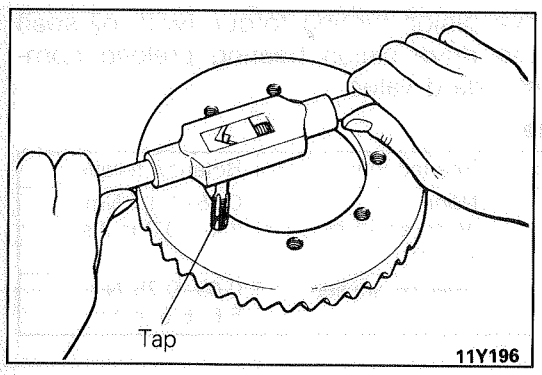

30. INSTALLATION OF DRIVE GEAR

(1) Clean the drive gear attaching bolts.
(2) Remove the adhesive adhered to the threaded holes of the drive gear by turning the tap tool (M10 × 1.25), and then clean the threaded holes by applying compressed air.

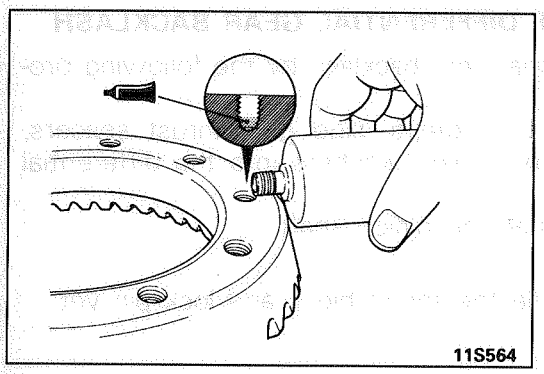

(3) Apply the specified adhesive to the threaded holes of the drive gear

Specified adhesive: 3M Stud Locking 4170 or equivalent

(4) Install the drive gear onto the differential case with the mating marks properly aligned. Tighten the bolts to the specified torque in a diagonal sequence.

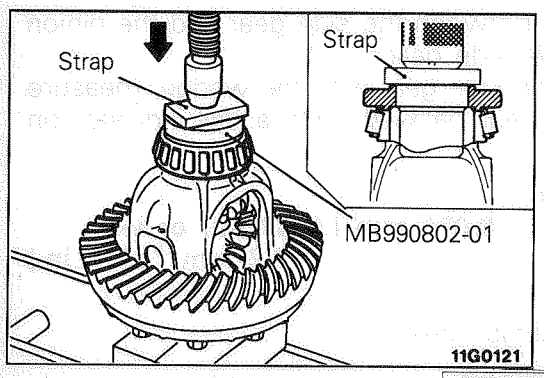

33. PRESS-FIT OF SIDE BEARING INNER RACE

Press-fit the side bearing inner races to the differential case by using the special tool.

Caution
When only one side bearing inner race is installed, only place load on the differential case.

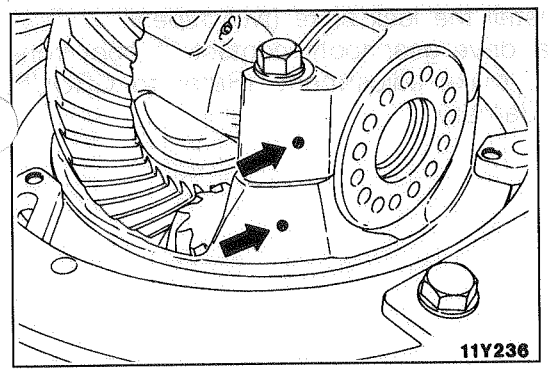

36. INSTALLATION OF BEARING CAP

Align the mating marks on the gear carrier and the bearing cap, and then tighten the bearing cap.

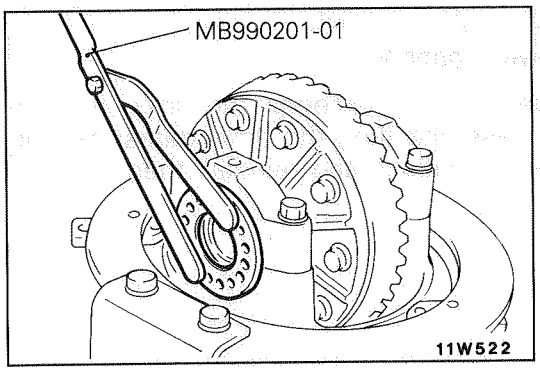

- **ADJUSTMENT OF FINAL DRIVE GEAR BACKLASH**

Adjust final drive gear backlash as follows:

(1) Using the special tool, temporarily tighten the side bearing nut until it is in the state just before preloading of the side bearing.

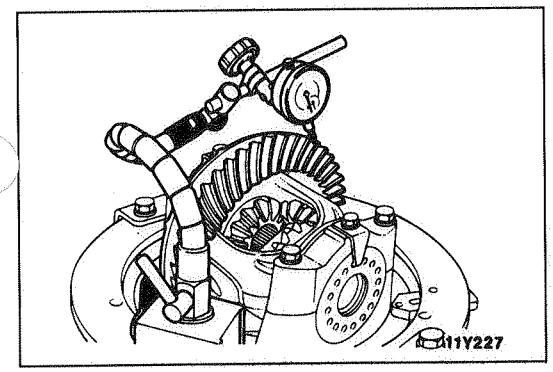

(2) Measure the final drive gear backlash.

Standard value: 0.13–0.18 mm (.0051–.0071 in.)

NOTE
Measure at least 4 points on the drive gear periphery.

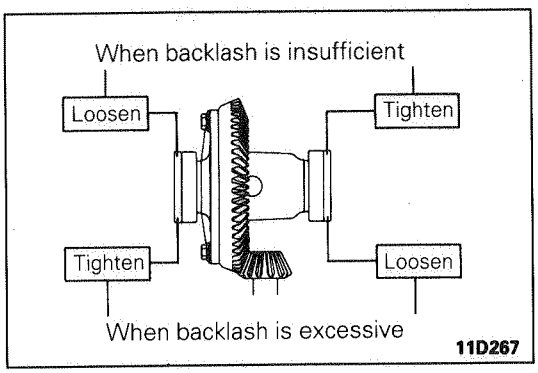

(3) Using the special tool (MB990201), adjust the backlash to standard value by moving the side bearing nut as shown.

NOTE
First turn the side bearing nut for loosening, and then turn (by the same amount) the side bearing nut for tightening.

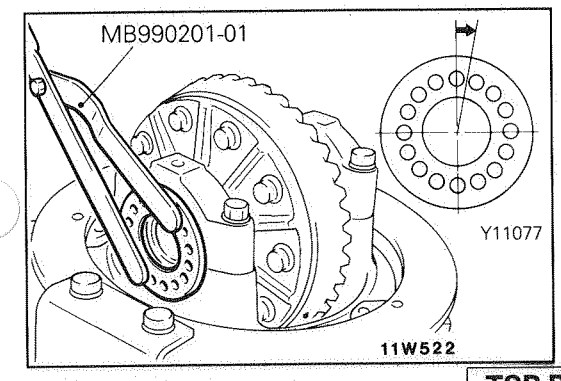

(4) Using the special tool, to apply the preload, turn down both right and left side bearing nuts on half the distance between centres of two neighbouring holes.

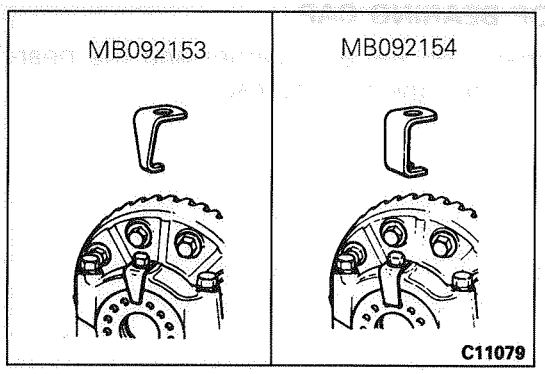

(5) Choose and install the lock plate (two types).
(6) Check the final drive gear tooth contact. If poor contact is evident, make adjustment. (Refer to GROUP 26-Differential Carrier.)

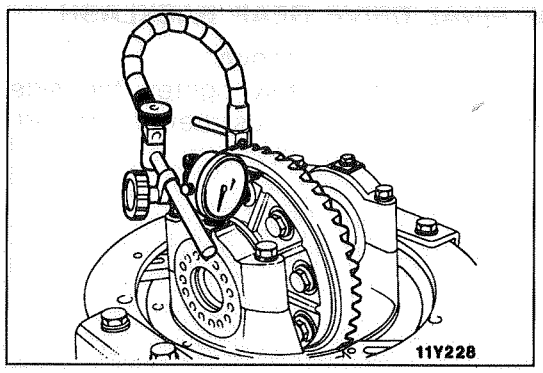

(7) Measure the drive gear runout.
Limit: 0.05 mm (.0020 in.)
(8) When drive gear runout exceeds the limit, remove the differential case and then the drive gears, moving them to different positions and reinstall them.

DISASSEMBLY AND REASSEMBLY (DIFFERENTIAL CASE)

M27IO--

Gear oil:
MITSUBISHI Genuine Gear Oil Part No. 8149630EX or equivalent

Caution
Apply the specified gear oil to each component especially careful to coat contact surfaces and sliding surfaces.

<Vehicles with limited slip differential>

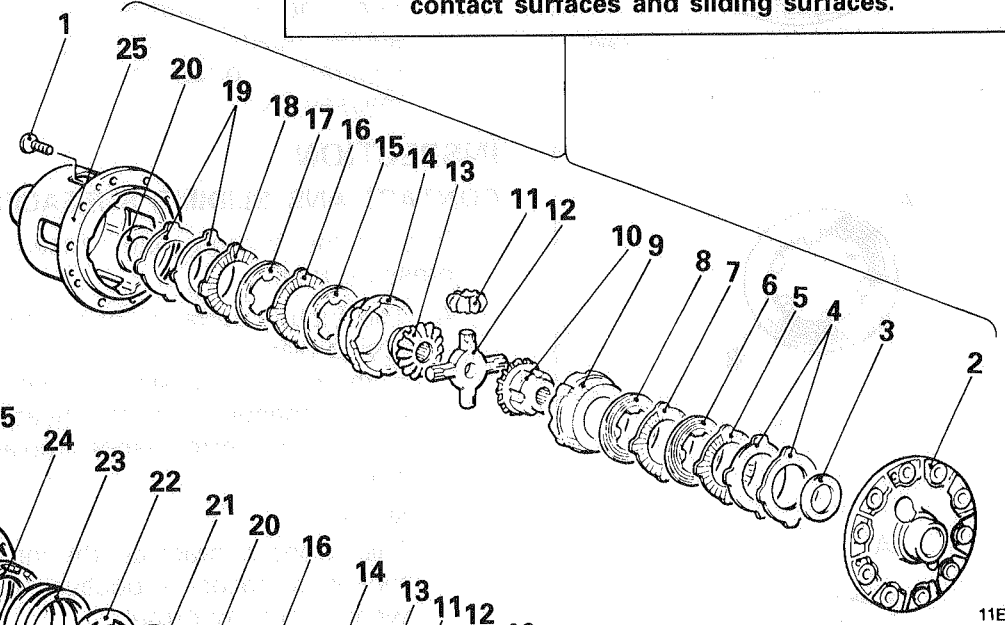

<Vehicles with rear differential lock>

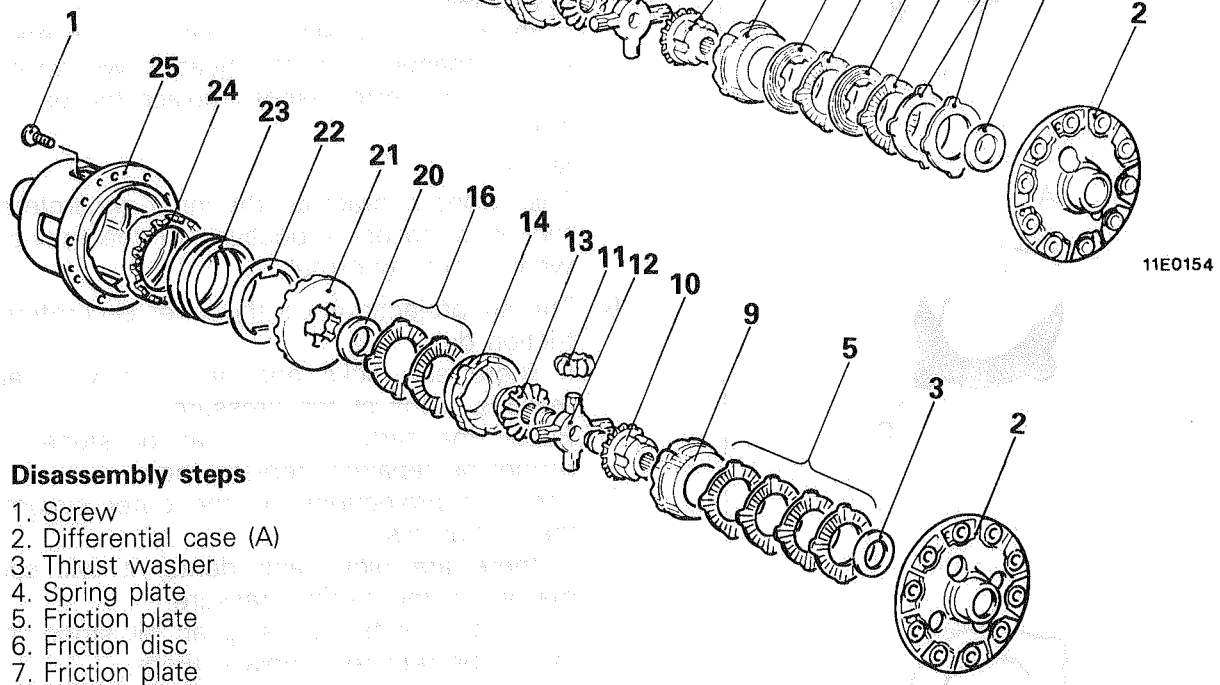

11E0154

Disassembly steps

◀■▶ ■▶◀ 1. Screw
2. Differential case (A)
3. Thrust washer
4. Spring plate
5. Friction plate
6. Friction disc
7. Friction plate
8. Friction disc
9. Pressure ring
10. Side gear
11. Differential pinion gear
12. Differential pinion shaft
13. Side gear
14. Pressure ring
15. Friction disc
16. Friction plate
17. Friction disc
18. Friction plate
19. Spring plate
20. Thrust washer
21. Driven cam
22. Spring washer
23. Spring
24. Drive cam
■▶◀ ● Adjustment of clutch plate friction force
25. Differential case (B)

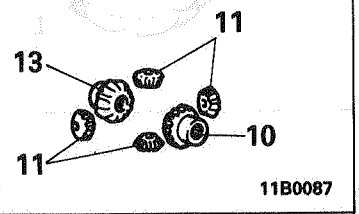

11B0087

Differential gear set

11E0114

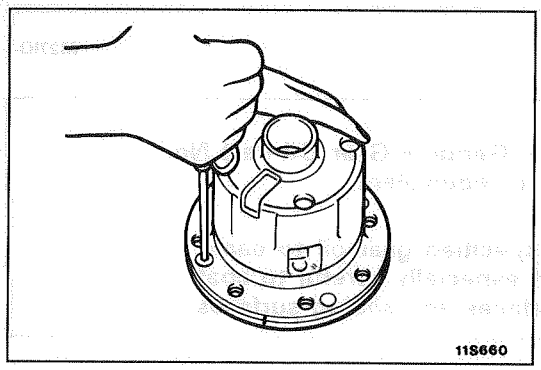
11S660

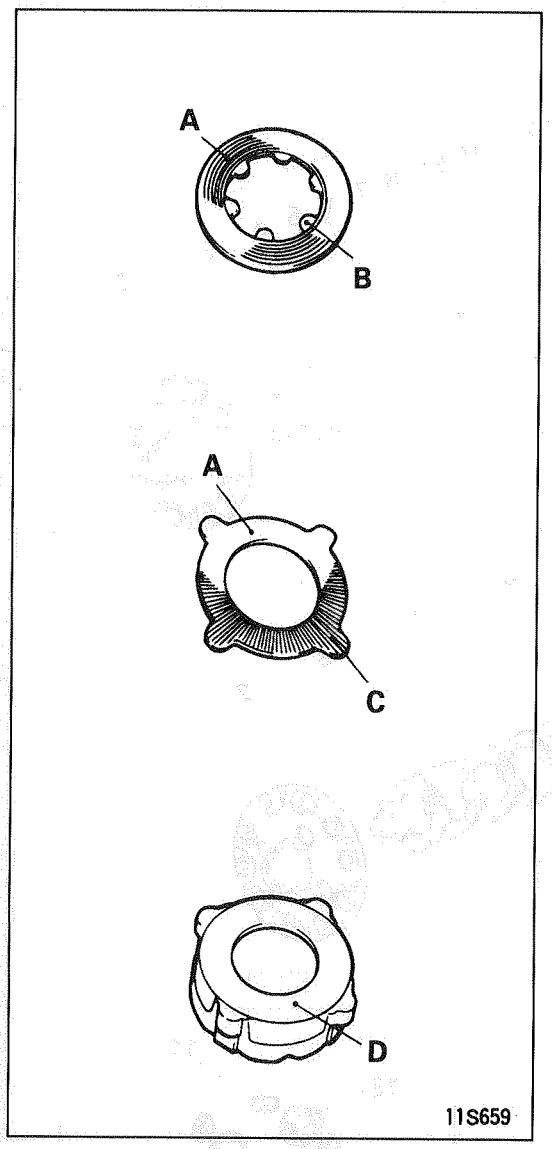

11S659

SERVICE POINTS OF DISASSEMBLY M27IPAA

1. REMOVAL OF SCREW

(1) Loosen screws of the differential cases (A) and (B) uniformly a little at a time.
(2) Separate differential case (A) from differential case (B).
(3) Remove the components from differential case (B).

NOTE
Keep the right and left thrust washers, spring plates, spring discs, friction plates, and friction discs separate in order to be able to distinguish them for reassembly.

INSPECTION M27IQAA

CONTACT AND SLIDING SURFACES OF PARTS

(1) Inspect the friction plate, friction disc, spring plate and pressure ring.

A. The friction surfaces of the friction plate, friction disc, spring plate.
If there are any signs of seizure, severe friction, or colour change from the heat, it will adversely affect the locking performance; replace the part with a new one.

NOTE
The strong contact on the inner circumference of the friction surfaces is because of the spring plate; this wear is not abnormal.

B. The six projections on the inner circumference of the friction disc.
If there are nicks and dents, it will cause abnormalities in the clutch pressure.
Repair the parts by using an oil stone; if the parts cannot be repaired, replace them.

C. The four projections on the outer circumference of the friction disc.
If there are nicks and dents, it will cause abnormalities in the clutch pressure.
Repair the parts by using an oil stone; if the parts cannot be repaired, replace them.

D. The friction surface of the friction disc of the pressure ring. If there are nicks or scratches, repair the part by first grinding with an oil stone and then polishing with rubbing compound on a surface plate.

NOTE
The strong contact on the inner circumference of the friction surface is because of the spring plate; this wear is not abnormal.

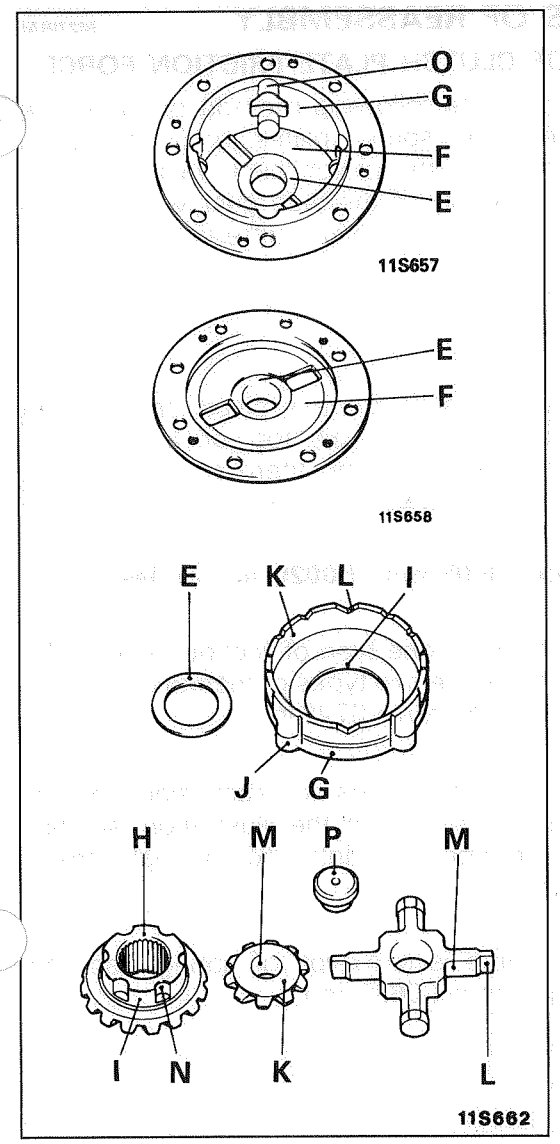

(2) Inspect the contact and sliding surfaces listed below, and repair any nicks and burrs by using an oil stone.

E. The sliding surfaces of the thrust washer and the case.
F. The spring contacting surface of the differential case.
G. The contact surfaces of the outer circumference of the pressure ring and the inner circumference of the differential case.
H. The sliding surface of the side gear.
I. The sliding surfaces of the hole in the pressure ring and the outer circumference of the side gear.
J. The projection on the outer circumference of the pressure ring.
K. The spherical surface of the differential pinion gear and the inner diameter of the pressure ring.
L. The V-shaped groove in the pressure ring, and the V-shaped part in the pinion shaft.
M. The outer diameter of the pinion shaft and the hole of the differential pinion gear.
N. The outer circumference groove of the side gear.
O. The inner circumference groove of the differential case.
P. The sliding surface of the thrust block.

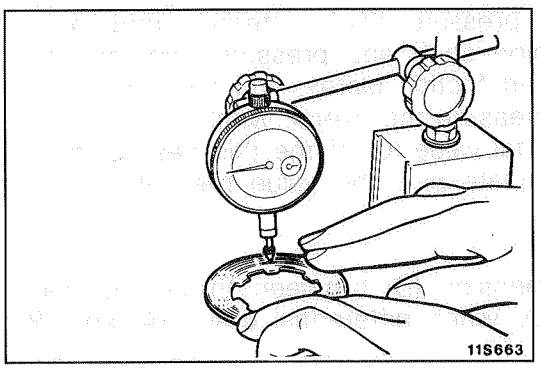

WARPING OF THE FRICTION PLATE AND FRICTION DISC

Using a dial indicator, measure the amount of warping (the flatness) of the friction plate and the friction disc on a surface plate by turning the friction plate or disc.

Limit: 0.08 mm (.0031 in.)

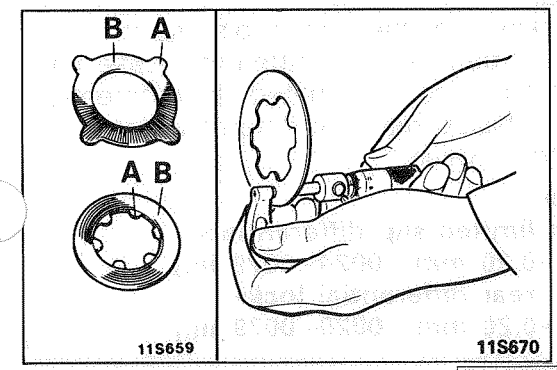

WEAR OF THE FRICTION PLATE AND FRICTION DISC

(1) In order to measure the wear, measure the thickness of the friction surfaces and projections of the friction disc and plate, and then find the difference.

Limit: 0.1 mm (.0039 in.)

NOTE
Make the measurement at several different points.

(2) If the parts are worn beyond the allowable limit, replace them with new parts.

SERVICE POINTS OF REASSEMBLY M27IRAF

• ADJUSTMENT OF CLUTCH PLATE FRICTION FORCE

Before assembly, use the following method to adjust the clearance between the spring plates and differential cases (for adjustment of the clutch plate friction force), and to adjust the end play of the side gear when installing the internal components into the differential case.

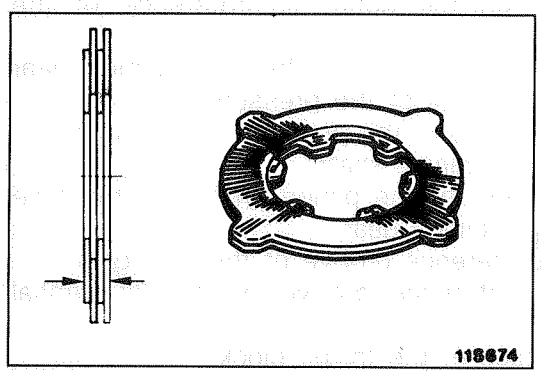

(1) Arrange the two (each) friction discs and friction plates for each side, one on top of another, as shown in the figure, combining them so that the difference in thickness between the left and the right is the standard value.

Standard value: 0.05 mm (.0020 in.) or less

NOTE
For new ones, there is one type of friction plate: 1.75 mm (.0689 in.); there are two types of friction disc: 1.75 mm (.0689 in.) and 1.85 mm (.0728 in.)

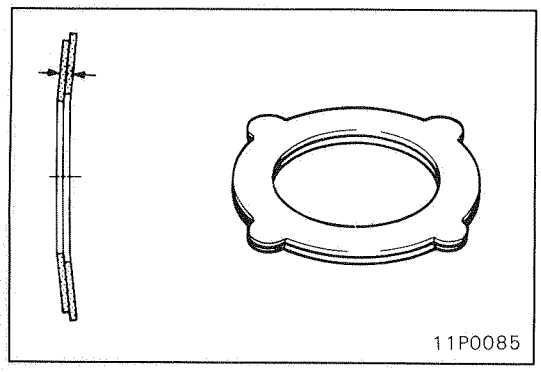

(2) Arrange the two spring plates for each side one on top of the other, as shown in the illustration, so that the difference between the left and the right thickness is minimized.

NOTE
For new ones, there is one type of spring disc and spring plate: 1.75 mm (.0689 in.).

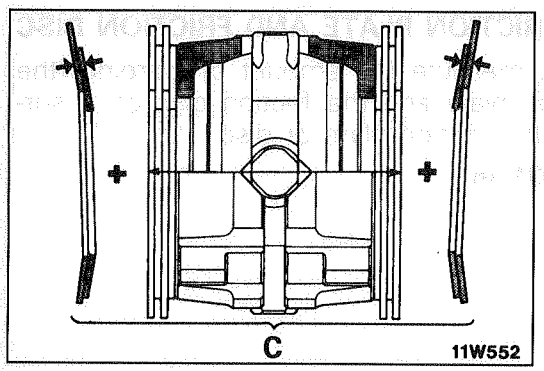

(3) Assemble the pressure ring's internal components (differential pinion shaft and pressure ring) and the friction discs and friction plates, and then as shown in the figure, measure the overall width.

(4) Calculate the total value (C) of the thickness of the 2 sets of spring plate plus the value measured in (3) above.

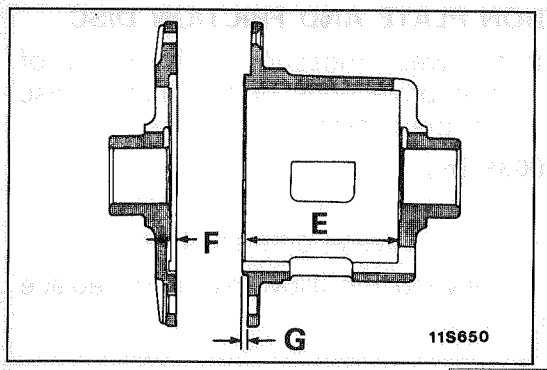

(5) Obtain the dimension (D) between the spring plate contact surfaces when differential cases (A) and (B) are combined.
(D = E + F – G)

(6) Change the thickness of the friction disc so that the clearance (D – C) between the differential case and the spring plate (vehicles with limited slip differential) or friction disc (vehicles with rear differential lock) becomes the standard value.

Standard value:
<Vehicles with limited slip differential>
0.06–0.20 mm (.0024–.0079 in.)
<Vehicles with rear differential lock>
0.05–0.20 mm (.0020–.0079 in.)

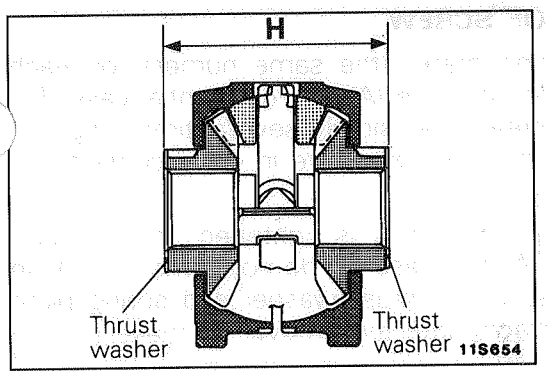

(7) Remove the spring plates, spring discs, friction plates and friction disc.
(8) Measure the dimension (H) from the thrust washer end surface to end surface.

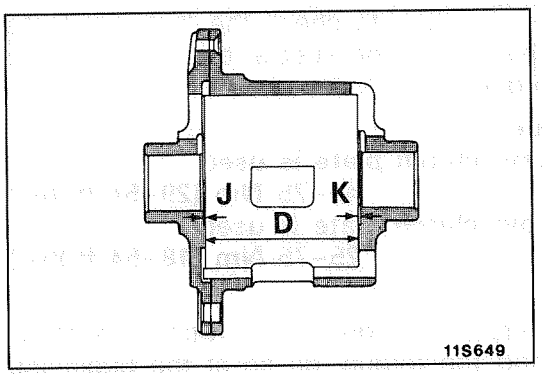

(9) Obtain the dimension (I) between the thrust washer contact surfaces when differential cases (A) and (B) are combined.
(I = D + J + K)

NOTE
Dimension (D) is the distance between the spring plate contact surfaces when differential cases (A) and (B) are combined. (Refer to P.27-42.)

(10) Change the thickness of the thrust washer so that the clearance (I – H) between the thrust washer and the differential case is the standard value.

Standard value: 0.05–0.20 mm (.0020–.0079 in.)

NOTE
There are three sizes of new thrust washers: 1.50 mm (.0591 in.), 1.60 mm (.0630 in.), and 1.70 mm (.0670 in.).

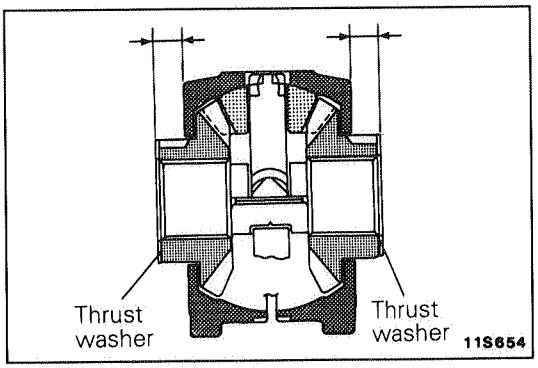

(11) Install the thrust washer as shown in the figure, and then select a thrust washer so that the difference between the left and right dimensions from the pressure ring rear face to the thrust washer end face is the standard value.

Standard value: 0.05 mm (.0020 in.) or less

NOTE
Measure the distance while squeezing the V-shaped groove manually.

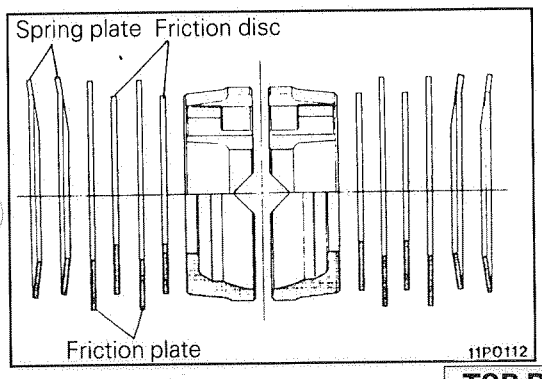

(12) Place the each part in the differential case (B) as directions shown in the figure.

NOTE
Be careful not to insert the friction plates and friction discs in the incorrect order and to install the spring plates in incorrect direction.

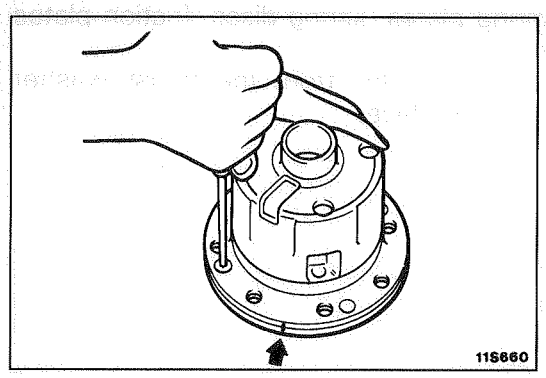

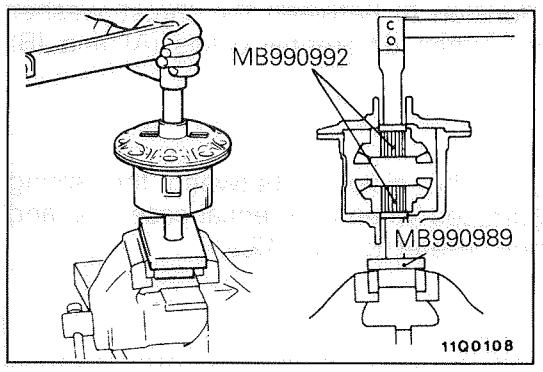

1. INSTALLATION OF SCREW

(1) Align the mating marks (the same numeral on each case) of differential case (A) and differential case (B).

(2) Turning the screwdriver slowly several times, tighten the screw so that the cases are in close contact.

NOTE
If, even though the screw is tightened, the end surfaces of case (A) and case (B) do not come into close contact, probably the thrust washer and spring plate are not fit correctly into the groove, so make the assembly again.

(3) After assembly, in order to check the frictional force of the clutch plate, use the special tools to measure the starting torque.

Standard value:

When a new clutch plate is used
40–75 Nm (29–54 ft.lbs.)

When an old clutch plate is used
25–75 Nm (18–54 ft.lbs.)

NOTE
Measure the starting torque after rotating slightly. When measuring the torque, do so at the beginning of movement.

WHEEL AND TIRE

CONTENTS

M31AA--

SERVICE ADJUSTMENT PROCEDURES **4**
- Tire Inflation Pressure Check 4
- Tire Wear Check 4
- Wheel Runout Check 4

SPECIFICATIONS **2**
- General Specifications 2
- Service Specifications 2

TROUBLESHOOTING **3**
- Bald Spots
- Cracked Treads
- Feathered Edge
- Rapid Wear at Center
- Rapid Wear at Shoulders
- Scalloped Wear
- Wear on One Side

SPECIFICATIONS

GENERAL SPECIFICATIONS

M31CA--

Items		Vehicles without wide fender	Vehicles with wide fender
Wheel			
Tire size		P235/75R15 105S	31×10.50R15 LT
Wheel type		Steel type Aluminum type*	Aluminum type
Wheel size		15×6JJ	15×7JJ
Amount off wheel offset	mm (in.)	33 (1.29)	10 (.39)
P.C.D.	mm (in.)	139.7 (5.5)	139.7 (5.5)
Tire inflation pressure	kPa (psi)		
Front		180 (26)	210 (29)
Rear		240 (35)	275 (40)

NOTE
1. * indicates options.
2. P.C.D. (Pitch Circle diameter) indicates the pitch circle diameter of the wheel installation holes.

SERVICE SPECIFICATIONS

M31CB--

Items		Specifications
Standard value		
Wheel nut tightening torque	Nm (ft.lbs.)	100–120 (72–87)
Limit		
Wheel runout	mm (in.)	
Radial		
Aluminum wheels		1.0 (.039)
Steel wheels		1.2 (.047)
Lateral		
Aluminum wheels		1.0 (.039)
Steel wheels		1.2 (.047)
Tread depth of tire	mm (in.)	1.6 (.06)

TROUBLESHOOTING

M31EAAB

Symptom	Probable cause	Remedy
Rapid wear at shoulders 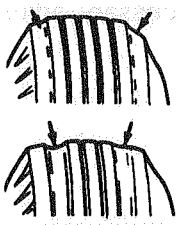	Under-inflation or lack of rotation 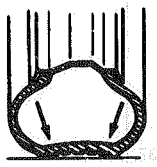	Adjust the tire pressure
Rapid wear at center 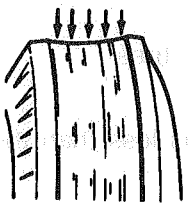	Over-inflation or lack of rotation 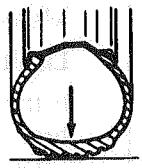	
Cracked treads 	Under-inflation	
Wear on one side 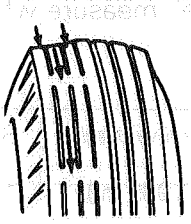	Excessive camber 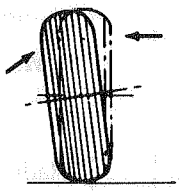	Inspect the camber
Feathered edge 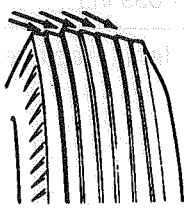	Incorrect toe-in 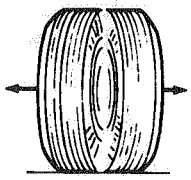	Adjust the toe-in
Bald spots 	Unbalanced wheel 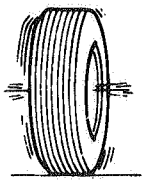	Adjust the unbalanced wheels
Scalloped wear 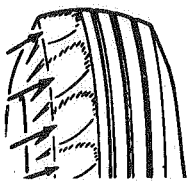	Lack of rotation of tires or worn or out-of-alignment suspension	Rotate the tires Inspect the front suspension alignment

11U0047

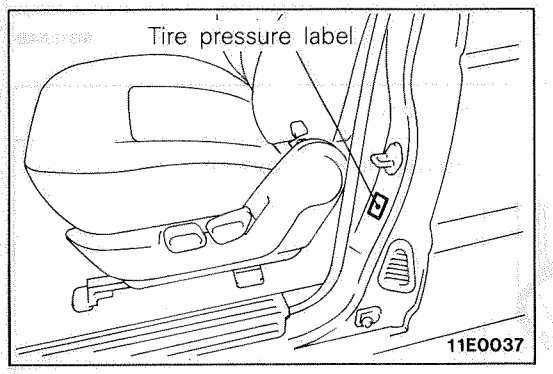

SERVICE ADJUSTMENT PROCEDURES

TIRE INFLATION PRESSURE CHECK M31FDAE

Check the inflation pressure of the tires. If it is not within the standard value, make the necessary adjustment.

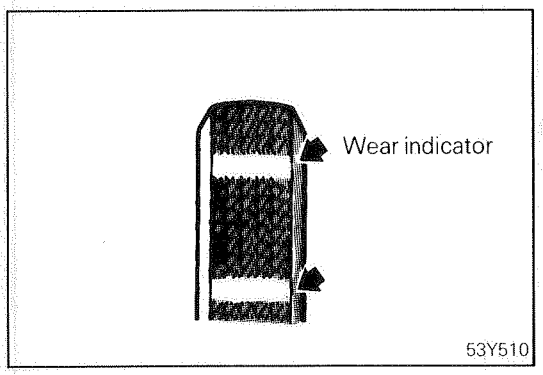

TIRE WEAR CHECK M31FBAC

Measure the tread depth of tires.

Limit: 1.6 mm (.06 in.)

If the remaining tread depth is less than the limit, replace the tire.

NOTE
When the tread depth of tire is reduced to 1.6 mm (.06 in.) or less, wear indicator will appear.

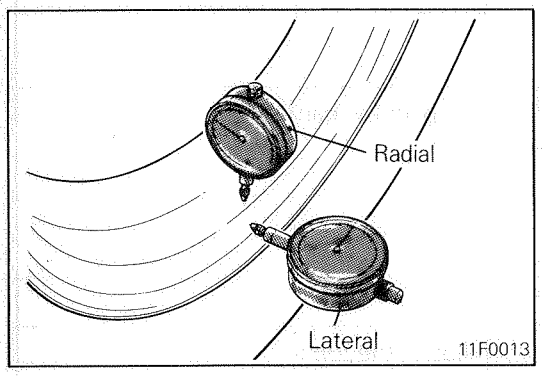

WHEEL RUNOUT CHECK M31FCAE

Jack up the vehicle so that the wheels are clear of the floor. While slowly turning the wheel, measure wheel runout with a dial indicator.

Limit:

	Aluminum wheels	Steel wheels
Radial	1.0 mm (.039 in.)	1.2 mm (.047 in.)
Lateral	1.0 mm (.039 in.)	1.2 mm (.047 in.)

If wheel runout exceeds the limit, replace the wheel.

TSB Revision

POWER PLANT MOUNT

CONTENTS

M32AA--

ENGINE MOUNTING 2

FRONT DIFFERENTIAL MOUNTING 3

ENGINE MOUNTING

REMOVAL AND INSTALLATION

M32GA--

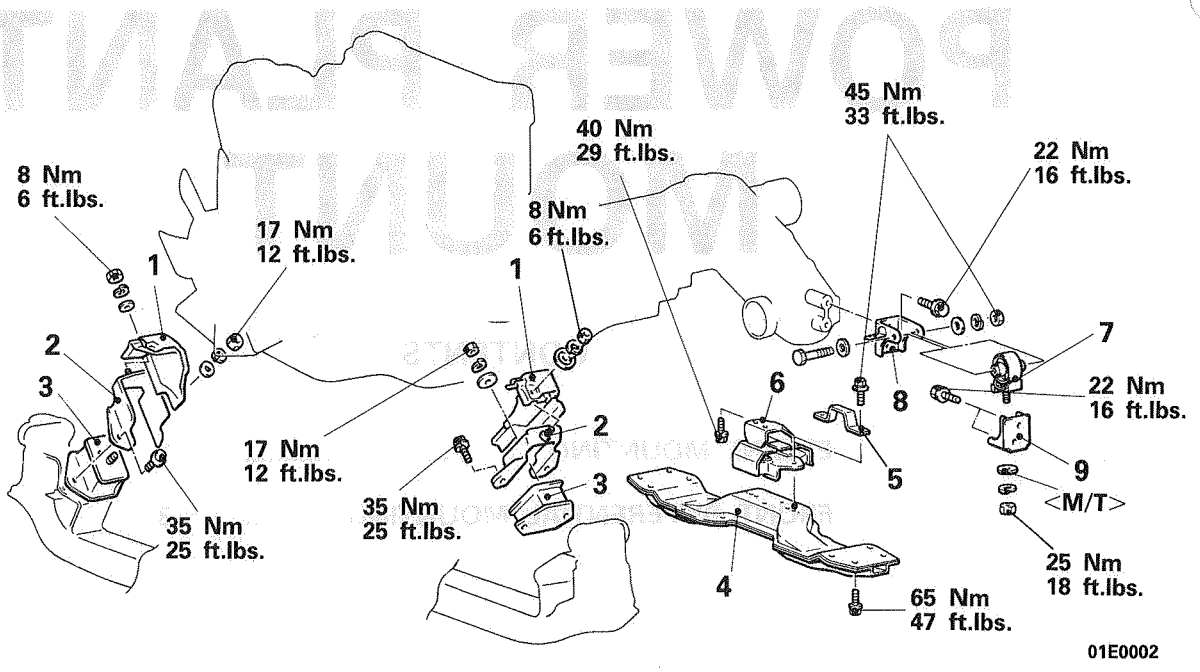

01E0002

Removal steps of front engine mount

- Removal of Engine Assembly (Refer to GROUP 11 – Engine Assembly.)

1. Heat protector
2. Front insulator stopper
3. Engine support front insulator

Removal steps of rear engine mount

4. No. 2 crossmember
5. Stopper
6. Engine support rear insulator

Removal steps of transfer role stopper

7. Transfer support insulator
8. Transfer mounting bracket
9. Transfer support bracket

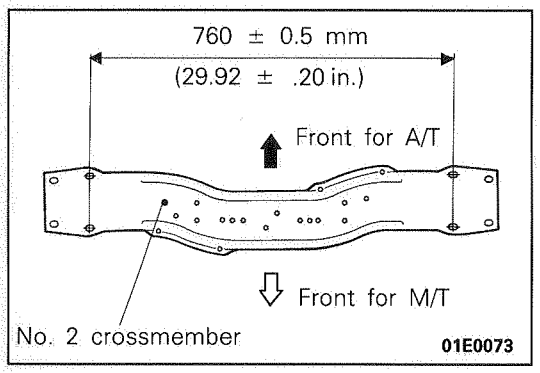

01E0073

INSPECTION

M32GCAN

- Check insulators for cracks, separation or deformation.
- Check the front insulator stoppers for deformations.
- Check insulators for cracks, separation or deformation.
- Check transfer mounting bracket for deformation or corrosion.
- Check transfer support bracket for deformation or corrosion.
- Check No. 2 crossmember for deformation or corrosion.

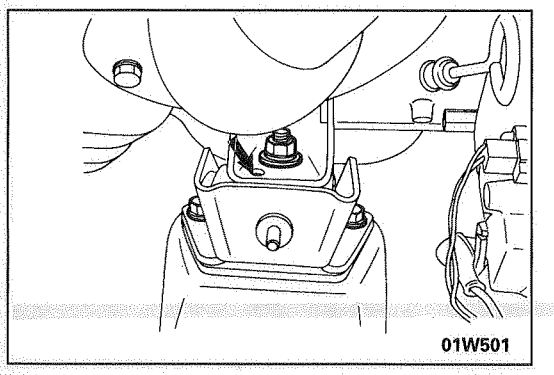

01W501

SERVICE POINTS OF INSTALLATION

M32GDAY

3. INSTALLATION OF ENGINE SUPPORT FRONT INSULATOR

Make sure that the locating boss and hole are in alignment.

Caution
Do not distort rubber portions, and never stain rubber portions with fuel or oil.

TSB Revision

FRONT DIFFERENTIAL MOUNTING

M32UA--

REMOVAL AND INSTALLATION

Pre-removal and Post-installation Operation
- Removal and Installation of the Under Cover and Under Skid Plate.

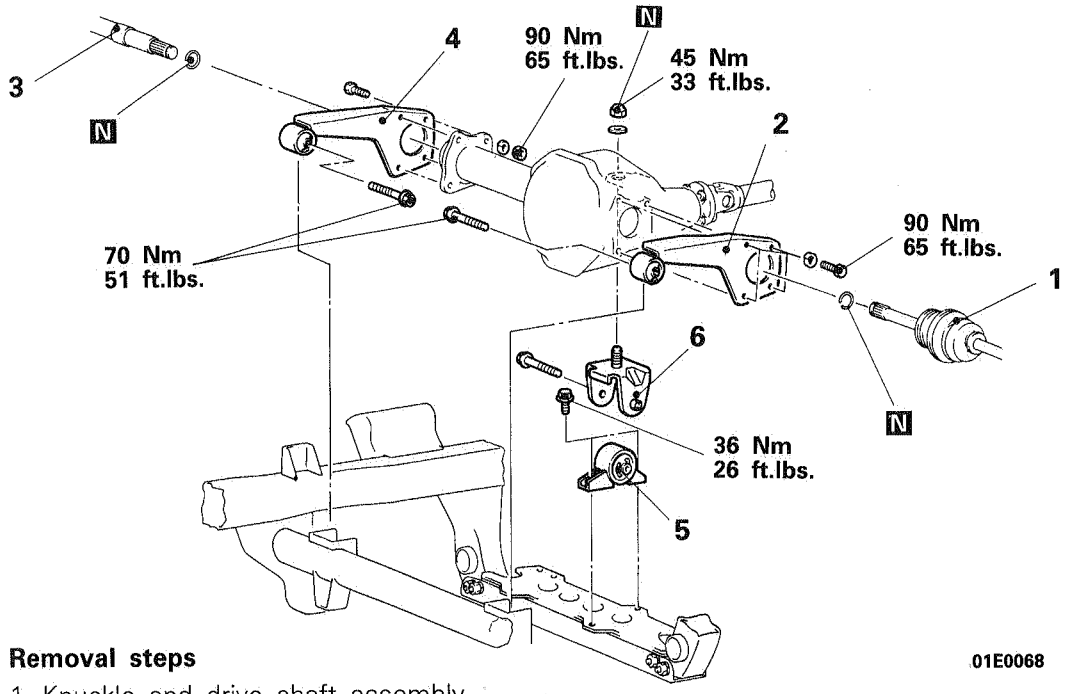

01E0068

Removal steps

1. Knuckle and drive shaft assembly (Refer to GROUP 26 – Knuckle, Drive Shaft.)
2. Differential mounting bracket (L.H.)
3. Inner shaft (Refer to GROUP 26 – Inner Shaft.)
4. Differential mounting bracket (R.H.)
5. Differential mounting bracket
6. Differential support bracket

SERVICE POINTS OF REMOVAL

M32UBAD

2. REMOVAL OF DIFFERENTIAL MOUNTING BRACKET (L.H.)/4. DIFFERENTIAL MOUNTING BRACKET (R.H.)/5. DIFFERENTIAL MOUNTING BRACKET

While supporting the differential carrier with a jack, remove the differential mounting bracket.

NOTE
Support the differential carrier with a jack until installing the differential mounting bracket.

INSPECTION

M32UCAB

- Check the differential mounting brackets for deformation and damage.
- Check the differential support bracket for deformation and damage.
- Check insulators for cracks, separation or deformation.

NOTES

FRONT SUSPENSION

CONTENTS

M33AA--

CONTROL SWITCH **20**

CONTROL UNIT **21**

LOWER ARM **15**
- Lower Arm Bushing Replacement 16
- Lower Ball Joint Dust Cover Replacement 17

SERVICE ADJUSTMENT PROCEDURES **11**
- Front Wheel Alignment Inspection and Adjustment 11

SHOCK ABSORBER AND UPPER ARM **13**
- Ball Joint Dust Cover Replacement 14

SPECIAL TOOLS **3**

SPECIFICATIONS **2**
- General Specifications 2
- Sealants and Adhesives 3
- Service Specifications 2

STABILIZER BAR **20**

TORSION BAR **18**

TROUBLESHOOTING **4**

SPECIFICATIONS

GENERAL SPECIFICATIONS

M33CA--

Items	Standard specifications	Optional specifications
Suspension system	Independent, double wishbone with torsion bar and telescopic shock absorber	
Torsion bar		
Length × O.D. mm (in.)	1277.5×26.2 (50.295×1.031)	
Spring constant (wheel position) N/mm (lbs./in.)	25 (140)	
Front shock absorbers		
Type	Hydraulic, cylindrical, double-acting type	Hydraulic, cylindrical, double-acting type with low-pressure nitrogen gas
Max. length mm (in.)	345 (13.6)	345 (13.6)
Min. length mm (in.)	225 (8.9)	230 (9.1)
Stroke mm (in.)	120 (4.7)	115 (4.5)
Damping force [at 0.3 m/sec (0.9 ft./sec.)]		
Expansion N (lbs.)	2,450 (540)	Hard: 3,150 (694) Medium: 2,350 (518) Soft: 1,700 (375)
Contraction N (lbs.)	1,500 (331)	Hard: 1,600 (353) Medium: 1,250 (276) Soft: 850 (187)

SERVICE SPECIFICATIONS

M33CB--

Items	Specifications
Standard value	
Toe-in	
At the center of tyre tread mm (in.)	3.5 ± 3.5 (.14 ± .14)
At the rim of disc wheel mm (in.)	1.8 ± 1.8 (.07 ± .07)
Toe-in angle (per wheel)	0°–0°17′
Toe-out angle on turn (inner wheel when outer wheel is at 20°)	21° 56′

TSB Revision

Items		Specifications
Camber		0°40′ ± 30′
Caster		3°00′ ± 1°00′
Kingpin inclination		14°52′
Upper ball joint starting torque	Nm (in.lbs.)	0.8–3.5 (7–30)
Shock absorber attaching dimension	mm (in.)	
Normal shock absorber		1–2 (.04–.08)
Remote-controlled variable shock absorber		1.5–2.5 (.06–.10)
Anchor arm attaching dimension	mm (in.)	138 (5.43)
Clearance between bump stopper and bump stopper bracket	mm (in.)	21–23 (.83–.91)
Stabilizer attaching bolt end attaching dimension	mm (in.)	8–9 (.31–.35)
Limit		
Lower ball joint end play	mm(in.)	0.3 (.012)

SEALANTS AND ADHESIVES

M33CE--

Items	Specified sealant
Upper ball joint dust cover to upper ball joint groove	3M ATD Part No. 8661 or equivalent

SPECIAL TOOLS

M33DA--

Tool	Number	Name	Use
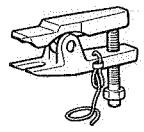	MB991406	Steering linkage puller	Removal of ball joints and knuckle
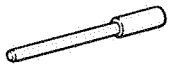	MB990883-01	Arbor	Removal and press-fitting of the lower arm bushing

TROUBLESHOOTING
<Remote controlled variable shock absorbers>

M33EAAF

SELECTION OF THE TROUBLESHOOTING CHART

Check the malfunction symptoms according to the following flow chart, and inspect according to the inspection chart.

Inspect with the engine idling

↓

When the shock absorber control switch position is changed, do the indicators operate normally?

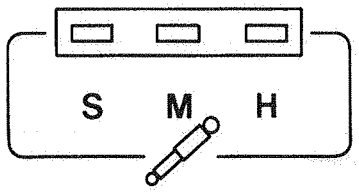

12E0025

No → Refer to Troubleshooting Chart [1] (malfunctions related to the indicators) (P.33-5).

Yes ↓

When the control switch position is changed while the vehicle is being rocked up and down, does the damping force change? (Carry out at the 4 locations at front and rear, left and right)

No → Refer to Troubleshooting Chart [2] (malfunctions related to the dampers) (P.33-6).

CHART CLASSIFIED BY THE MALFUNCTION SYMPTOM

TROUBLESHOOTING [1] (MALFUNCTIONS RELATED TO THE INDICATORS)

Trouble Symptom	Inspection	Diagnosis		Probable cause
		Normal	Problem	
Even when switched to S (soft) mode, the indicator does not illuminate.	(1) Remove the shock absorber control switch connector and ground the harness connector No. 4 terminal.	The indicator illuminates	The indicator remains off	• Broken wire in fuse No.11 in the junction block • Light-emitting diode is defective • Broken harness wire between the combination meter and either the junction block or the shock absorber control switch
	(2) Remove the shock absorber control switch connector and check for continuity between switch connector terminals No. 4 and No. 2 when the switch is set to S (soft).	Continuity	No continuity	• Shock absorber control switch is defective
	(3) When the results of inspection items (1) and (2) are normal.	–	–	• Broken harness wire between the control switch and the ground • Ground connection is defective
Even when switched to M (medium) mode, the indicator does not illuminate.	(1) Remove the shock absorber control switch connector and ground the harness connector No. 5 terminal.	The indicator illuminates	The indicator remains off	• Broken wire in fuse No. 11 in the junction block • Light-emitting diode is defective • Broken harness wire between the combination meter and either the junction block or the shock absorber control switch
	(2) Remove the shock absorber control switch connector and check for continuity between switch connector terminals No. 5 and No. 2 when the switch is set to M (medium).	Continuity	No continuity	• Shock absorber control switch is defective
	(3) When the results of inspection items (1) and (2) are normal.	–	–	• Broken harness wire between the shock absorber control switch and the ground • Ground connection is defective

Trouble Symptom	Inspection	Diagnosis		Probable cause
		Normal	Problem	
Even when switched to H (hard) mode, the indicator does not illuminate.	(1) Remove the shock absorber control switch connector and ground the harness connector No. 6 terminal.	The indicator illuminates	The indicator remains off	• Broken wire in fuse No. 11 in the junction block • Light-emitting diode is defective • Broken harness wire between the combination meter and either the junction block or the shock absorber control switch
	(2) Remove the shock absorber control switch connector and check for continuity between switch connector terminals No. 6 and No. 2 when the switch is set to H (hard).	Continuity	No continuity	• Shock absorber control switch is defective
	(3) When the results of inspection items (1) and (2) are normal.	–	–	• Broken harness wire between the shock absorber control switch and the ground • Ground connection is defective

TROUBLESHOOTING CHART [2] (MALFUNCTION RELATED TO THE DAMPERS)

A Part of the damping force does not change.

NOTE
When the front or rear left and right mutual damping forces do not change, the problem is probably a broken harness wire between the actuator and either the shock absorber control unit or the shock absorber control switch, so the harness should be checked first.

Swap the actuators in the left and right wheels and check that the damping force is changed over by operation of the shock absorber control switch.

↓

Has the malfunction disappeared?

→ No (The malfunction appears at the other wheel) → Actuator is defective

↓ No (The malfunction remains on the initial wheel.)

Remove the malfunctioning actuator.

↓

Does the control rod inside the piston rod turn easily?

→ No → Shock absorber assembly is defective

↓ Yes

Broken harness wire or short between the actuator and either the shock absorber control unit or the shock absorber control switch

B Damping force for all wheels does not change over.

Remove the shock absorber control unit connector.

When the ignition switch is turned to ON, does a voltage of approximately 12 V show between the harness connector terminal No. 4 of the shock absorber control unit and the ground?

No → Broken harness wire between the shock absorber control unit and the junction block

Yes

Is there continuity between the harness connector No. 1 terminal of the shock absorber control unit and the ground?

No → Broken harness wire between the shock absorber control unit and the ground

Yes

Is there normal continuity between the shock absorber control unit harness connector terminal No. 3 and the ground, No. 7 and the ground, and No. 2 and the ground?

<When normal>

Terminal \ Mode	S (soft)	M (medium)	H (hard)
No. 3	Continuity	No continuity	No continuity
No. 7	No continuity	Continuity	No continuity
No. 2	No continuity	No continuity	Continuity

No → Broken harness wire between the shcok absorber control unit and the shcok absorber control switch

Yes

When 12 V is applied to the harness connector No. 6 terminal of the shock absorber control unit, does the damping force change over?

No → Broken harness wire or short between the actuator and either the shock absorber control unit or the shock absorber control switch

Yes → Shock absorber control unit connection is defective, or the shock absorber control unit is defective

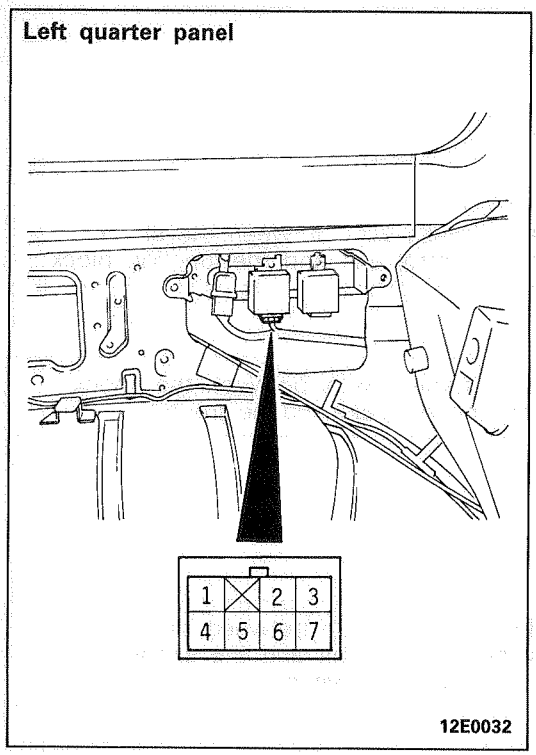

SHOCK ABSORBER CONTROL UNIT SIGNAL CIRCUIT INSPECTION

(1) Remove the shock absorber control unit connector, and inspect the harness-side connector.

VB: Battery Voltage

Terminal No.	Connection destination	Measurement	Tester connection	Check condition		Standard
1	Ground	Continuity	1 – Ground	Constantly		Continuity
2	Shcok absorber control switch (Hard)	Continuity	2 – Ground	Shock absorber control switch condition	S (Soft mode)	No continuity
					M (Medium mode)	No continuity
					H (Hard mode)	Continuity
7	Shcok absorber control switch (Medium)	Continuity	7 – Ground	Shock absorber control switch condition	S (Soft mode)	No continuity
					M (Medium mode)	Continuity
					H (Hard mode)	No continuity
3	Shcok absorber control switch (Soft)	Continuity	3 – Ground	Shock absorber control switch condition	S (Soft mode)	Continuity
					M (Medium mode)	No continuity
					H (Hard mode)	No continuity
4	Power supply	Voltage	4 – Ground	Ignition switch	OFF	0 V
					ON	VB

(2) Connect the shock absorber control unit and inspect.

Terminal No.	Connection destination	Measurement	Tester connection	Check condition	Standard
6	Shock absorber actuator	Voltage	6 – Ground	5 seconds after operating the shock absorber control switch	Approx. 12 V
				Conditions except for above	0 V

REMOTE CONTROL VARIABLE SHOCK ABSORBERS SYSTEM

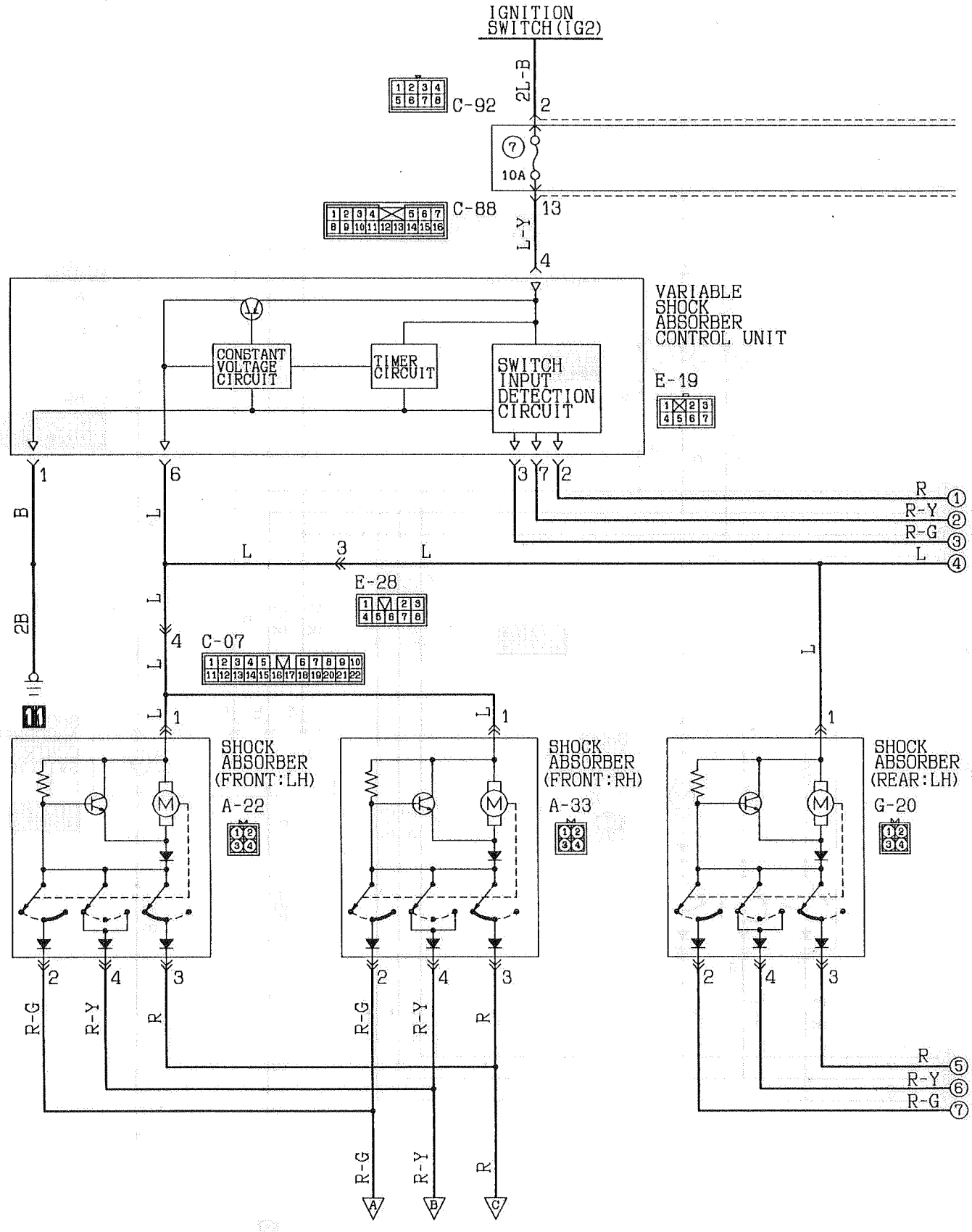

KX35-AC-Q1503-N

TSB Revision

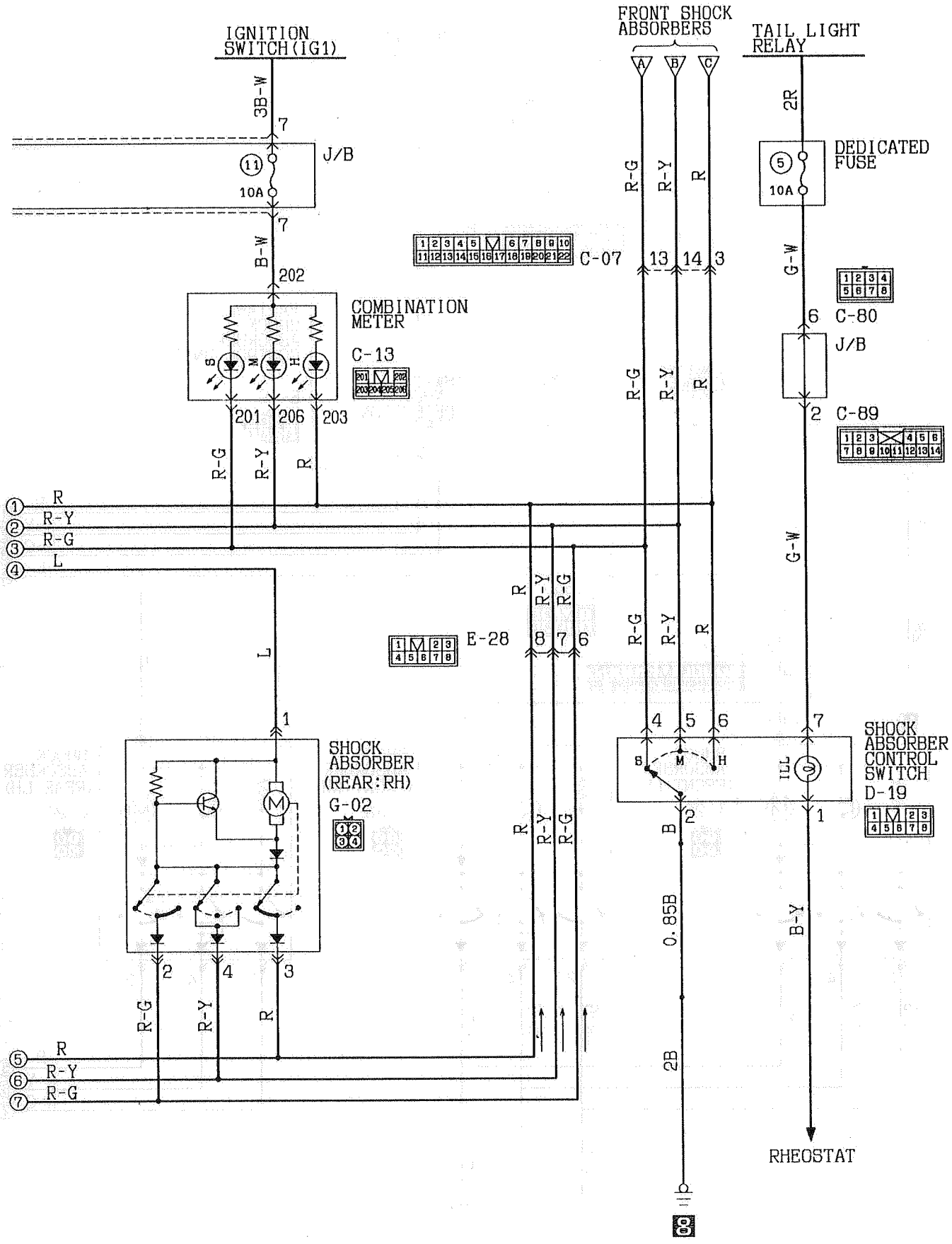

TSB Revision

SERVICE ADJUSTMENT PROCEDURES

FRONT WHEEL ALIGNMENT INSPECTION AND ADJUSTMENT

M33FBAF

TOE-IN

1. Measure the toe-in.

Standard value:

At the center of tire tread	**3.5 ± 3.5 mm (.14 ± .14 in.)**
At the rim of disc wheel	**1.8 ± 1.8 mm (.07 ± .07 in.)**
Toe angle (per wheel)	**0°–0°17′**

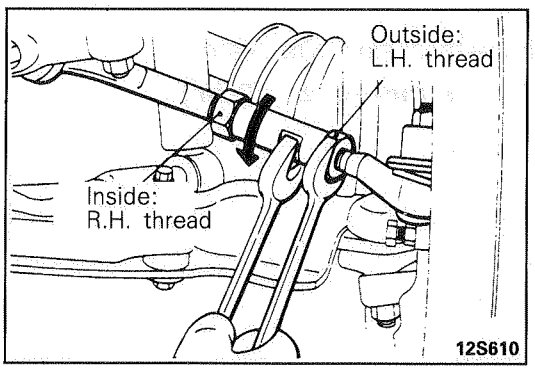

2. If the toe-in is not within the standard value, adjust the toe-in by turning the left and right tie rod turnbuckles by the same amount (in opposite directions).

Caution
The difference between the left and right tie rods shall not exceed 5 mm (.2 in.).

3. After making the adjustments, use a turning radius gage to confirm that the steering wheel turning angle is within the standard value range. (Refer to GROUP 37.)

TOE-OUT ANGLE ON TURNS

To check the steering linkage, especially after the vehicle has been involved in an accident or if an accident is presumed, it is advisable to check the toe-out angle on turns in addition to the wheel alignment.
Conduct this test on the left turn as well as on the right turn.

Standard value: **21°56′ (inner wheel when outer wheel at 20°)**

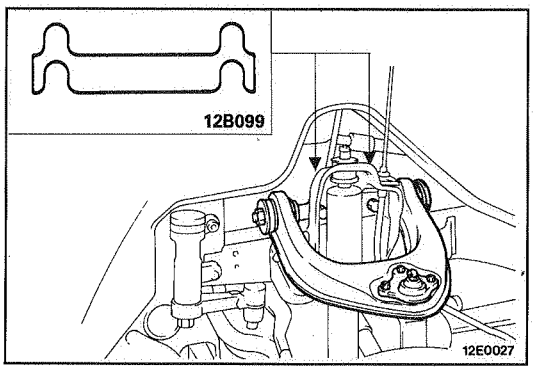

CAMBER

Standard value:
CAMBER
0°40′ ± 30′
(Left/right deviation within 30′)

1. Make adjustment of the camber by increasing or decreasing the thickness of the adjusting shim provided between the upper arm shaft and the crossmember.

NOTE
- Standard thickness of the shim is 4 mm (.16 in.).
- Number of shims is three or less.

Camber adjustment shim (yellow plating)

Part number	Thinkness mm (in.)
MB176288 MB176289	1.0 (.039) 2.0 (.079)

CASTER

Standard value: 3°00′ ± 1°
(Left/right deviation within 30′)

NOTE
1. Caster is pre-set at the factory and cannot be adjusted.
2. If caster is not within the standard value, replace bent or damaged parts.

KINGPIN INCLINATION

Standard value: 14°52′

SIDE SLIP

Measure the side slip with a side slip tester.

Standard value: 0 ± 3 mm (0 ± .12 in.)



SHOCK ABSORBER AND UPPER ARM

M33MA--

REMOVAL AND INSTALLATION

Post-installation Operation
- Inspection and Adjustment of Wheel Alignment (Refer to P.33-11.)
- Brake line Bleeding (Refer to GROUP 35 – Service Adjustment Procedures.)

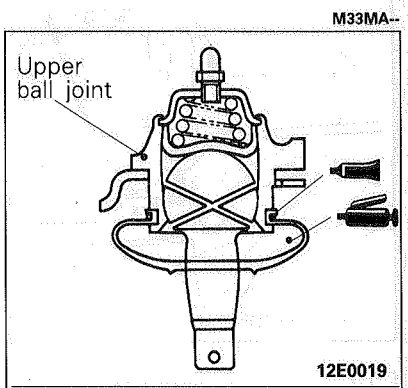

Sealant: 3M ATD Part No. 8661 or equivalent

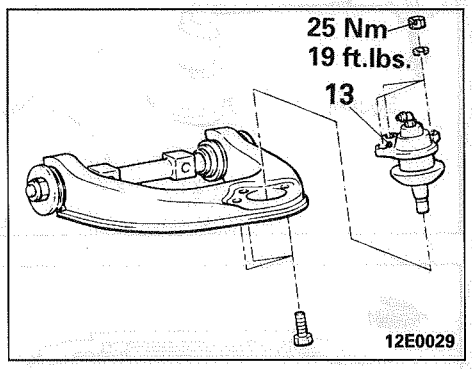

Shock absorber removal steps

◆◆ 1. Actuator (Vehicles with remote controlled variable shock absorbers)
◆◆ 2. Schock absorber

Upper arm removal steps

Adjustment of clearance between bump stopper and bump stopper bracket (Refer to P.33-19.)
◆◆ 3. Anchor arm assembly adjusting nut
4. Hose clip
5. Brake hose connection
◆◆ 6. Connection for upper ball joint and knuckle
7. Brake hose support
8. Rebound stopper
9. Speed sensor bracket (Vehicles with A.B.S.)
10. Rebound stopper
11. Shim
12. Upper arm
13. Upper ball joint

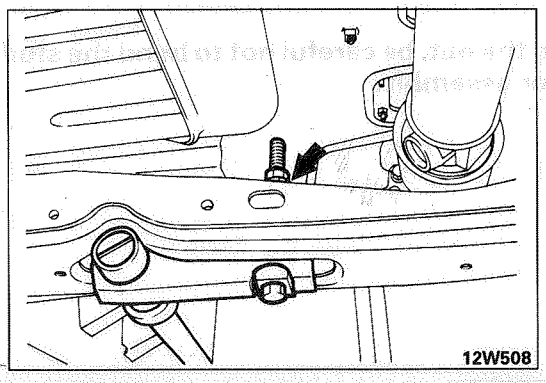

SERVICE POINTS OF REMOVAL

M33MBAJ

3. LOOSENING OF ANCHOR ARM ASSEMBLY ADJUSTING NUT

Loosen the anchor bolt of the torsion bar all the way.

NOTE
When the anchor arm assembly adjusting nut is loosened, use a jack to support the lower arm of the side to be loosened, thus the work easier.

TSB Revision

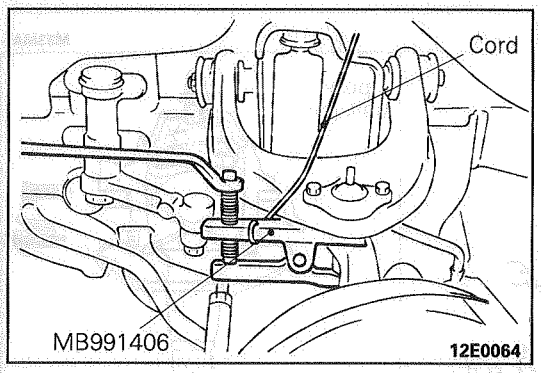

6. DISCONNECTION OF UPPER BALL JOINT AND KNUCKLE

Using the special tool, disconnect the upper arm ball joint from the knuckle.

Caution
1. **Be sure to tie the cord of the special tool to the nearby part.**
2. **Loosen the nut but do not remove it.**

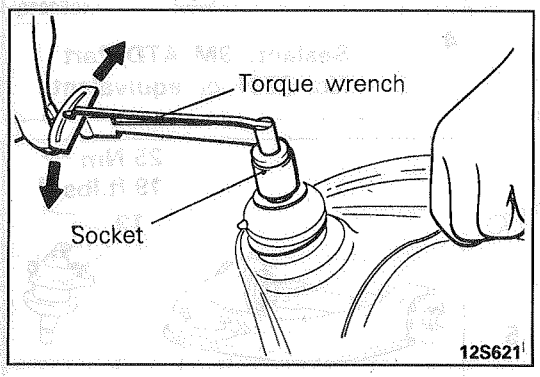

INSPECTION M33MCAC

UPPER BALL JOINT STARTING TORQUE CHECK

1. Measure the upper ball joint starting torque with a torque wrench.

   Standard value: 0.8–3.5 Nm (7–30 in.lbs.)
2. If the upper ball joint starting torque is out of specification, replace the upper ball joint.

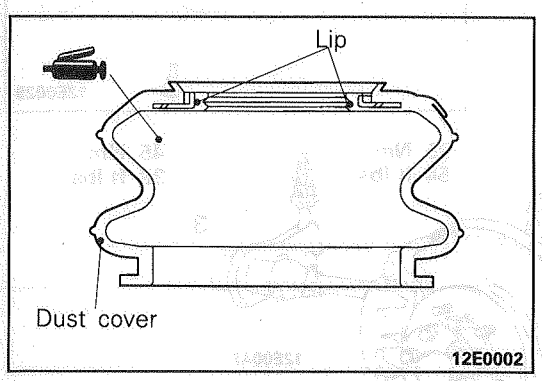

BALL JOINT DUST COVER REPLACEMENT M33MFAC

1. Remove the dust cover.
2. Apply multipurpose grease to both the interior of dust cover and the upper ball joint.

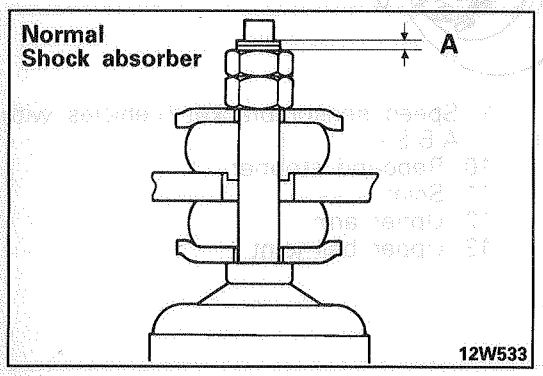

SERVICE POINT OF INSTALLATION M33MEAG

2. INSTALLATION OF SHOCK ABSORBER/1. ACTUATOR (VEHICLES WITH REMOTE-CONTROLLED VARIABLE SHOCK ABSORBER)

Tighten the shock absorber installation nut so that the dimension shown in the figure (A and B) is the standard value.

Standard value A: 1–2 mm (.04–.08 in.)
B: 1.5–2.5 mm (.06–.10 in.)

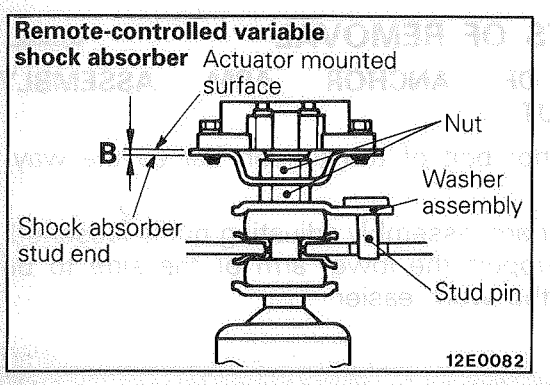

Caution
When tightening the nut, be careful not to bend the stud pin of the washer assembly.

TSB Revision

LOWER ARM

M33NA--

REMOVAL AND INSTALLATION

Post-installation Operation
- Inspection and Adjustment of Wheel Alignment (Refer to P.33-11.)

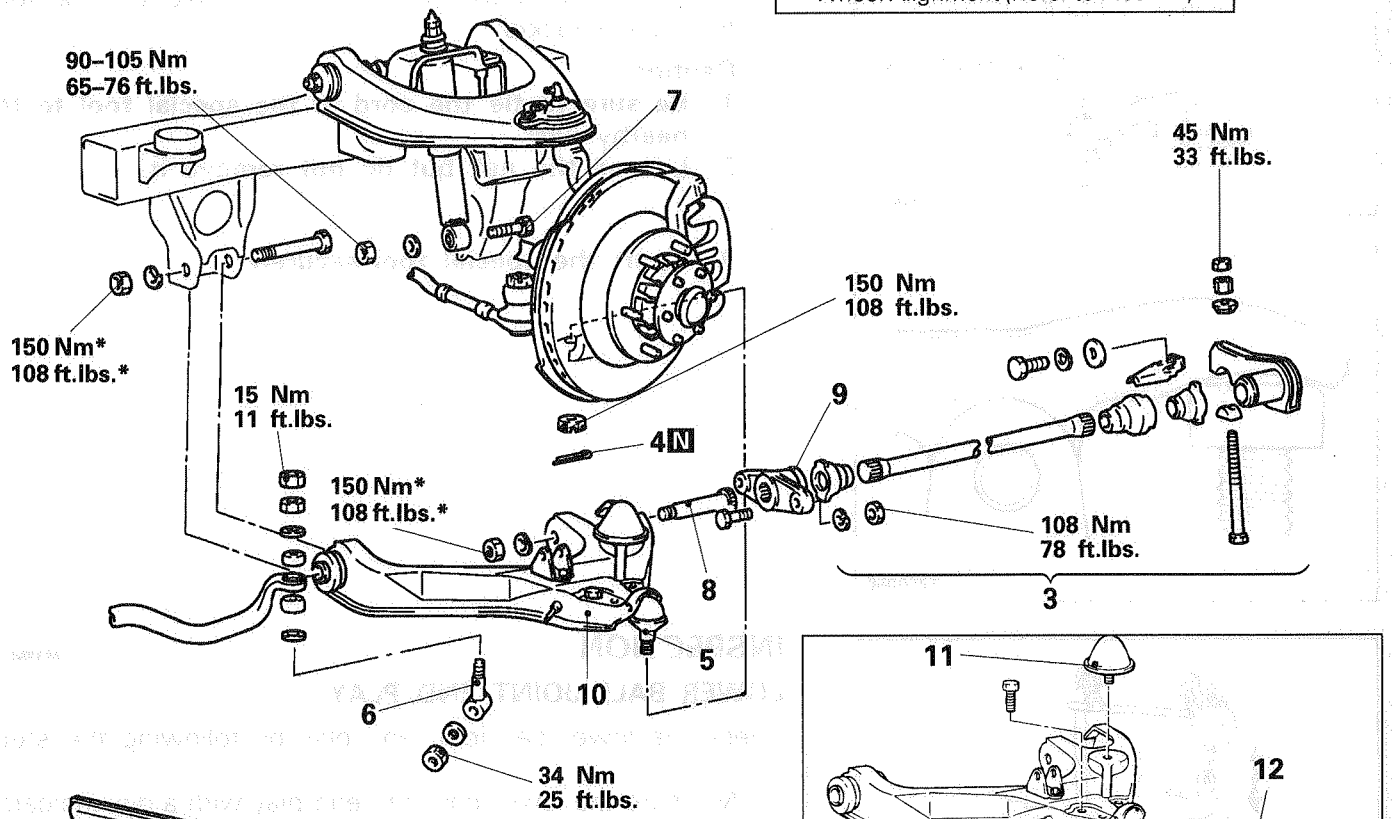

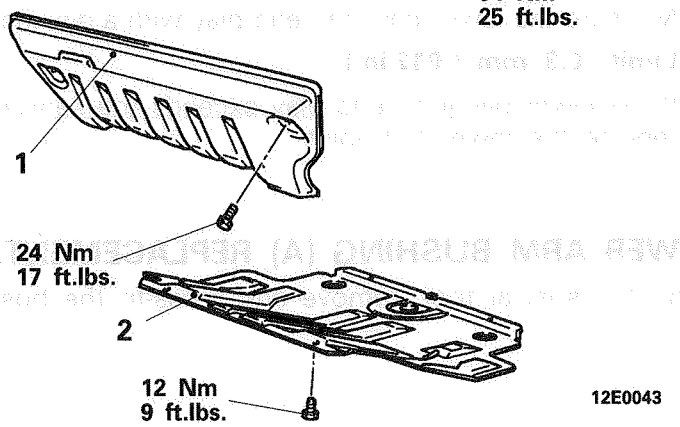

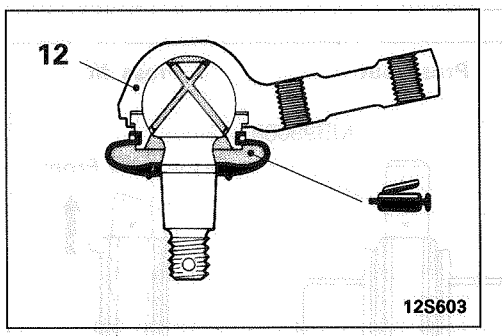

Removal steps

1. Under skid plate
2. Under cover
   Adjustment of clearance between bump stopper and bump stopper bracket (Refer to P.33-19.)
3. Torsion bar (Refer to P.33-18.)
4. Split pin
5. ◀▶ Connection for lower ball joint and knuckle
6. ▶◀ Stabilizer link assembly (Refer to P.33-20.)
7. Shock absorber mounting bolts
8. Lower arm shaft
9. Anchor arm B
10. Lower arm
11. Bump stopper
12. Lower ball joint

NOTE

*: Indicates part which should be temporarily tightened, and then fully tightened with the vehicle in the unladen condition.

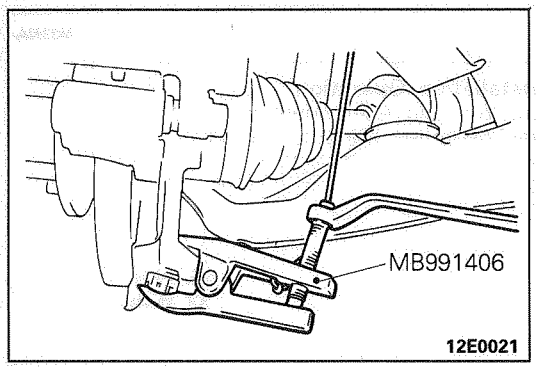

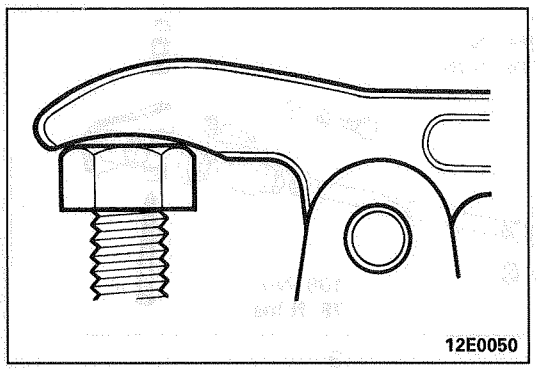

SERVICE POINT OF REMOVAL M33NBAE

5. DISCONNECTION OF LOWER BALL JOINT AND KNUCKLE

Using the special tool, disconnect the lower arm ball joint from the knuckle.

Caution

1. **Be sure to tie the cord of the special tool to the nearby part.**
2. **Loosen the nut but do not remove it.**
3. **Insert the special tool securely.**

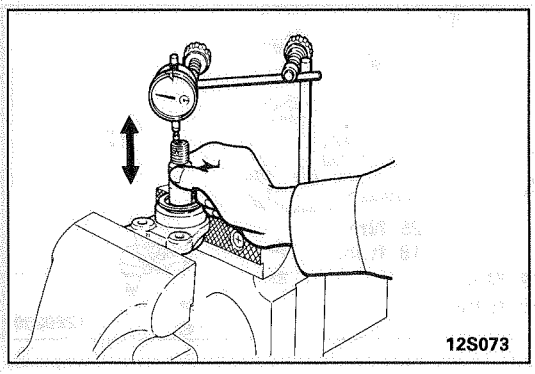

INSPECTION M33NCAC

LOWER BALL JOINT END PLAY

Check the lower ball joint end play by following the steps below.

1. Measure the lower ball joint end play with a dial indicator.
   Limit: 0.3 mm (.012 in.)
2. If the lower ball joint end play exceeds the service limit, replace the lower ball joint.

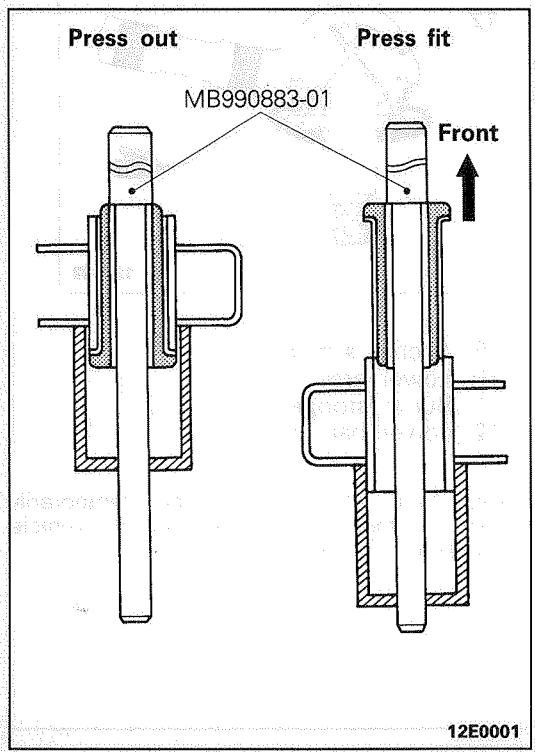

LOWER ARM BUSHING (A) REPLACEMENT M33NDAC

Using the special tool, remove and press-fit the bushing.

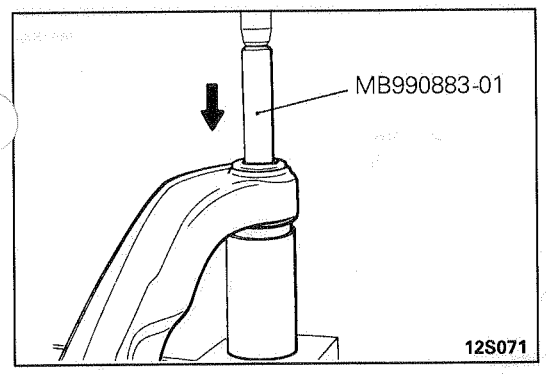

LOWER ARM BUSHING (B) REPLACEMENT M33NDAD

1. Remove the bushing B from the lower arm by using special tools.

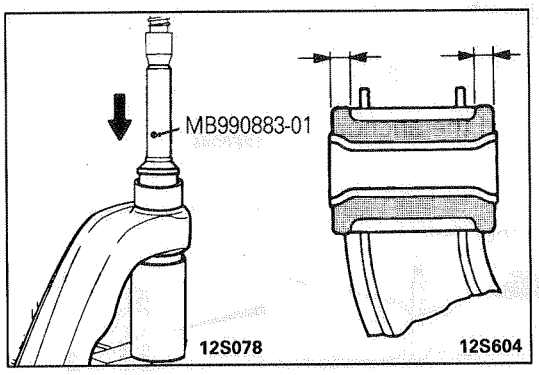

2. Coat the bushing B and the lower arm with soap solution and press-fit the bushing B into the lower arm by using special tools and taking care not to twist or tilt the bushing B.

   NOTE
   Press-fit the bushing again from the opposite side to equalize bushing projections at both ends.

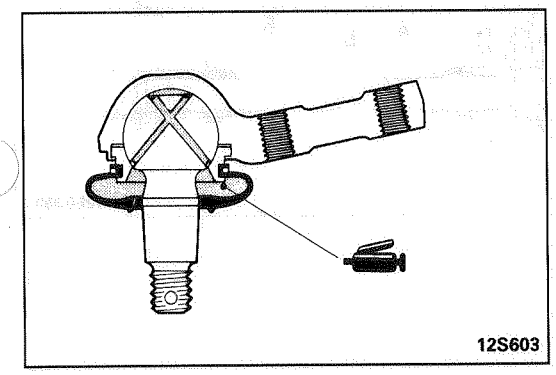

LOWER BALL JOINT DUST COVER REPLACEMENT M33NEAD

1. Apply multipurpose grease to the interior of the dust cover and the lower ball joint.
2. Secure the dust cover to the lower ball joint with a ring.

TORSION BAR

M33SA--

REMOVAL AND INSTALLATION

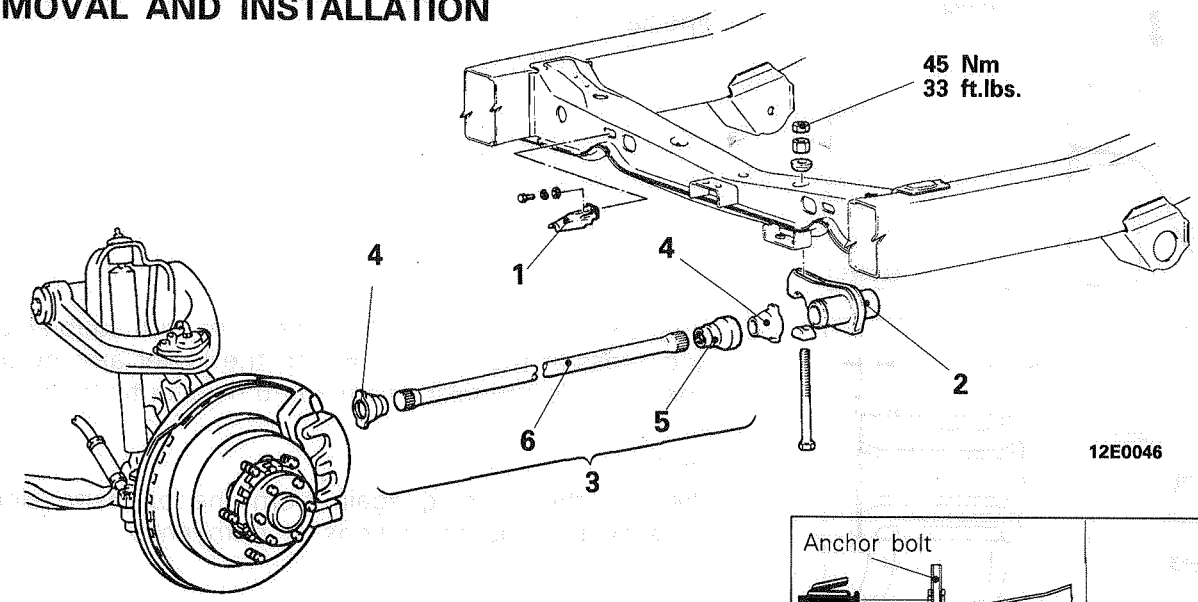

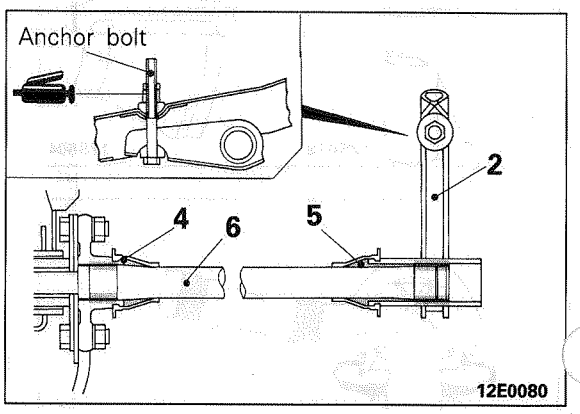

Removal steps

1. Heat protector (right side only)
- ◆◆ • Adjustment of clearance between bump stopper and bump stopper bracket
2. Anchor arm assembly
- ◆◆ 3. Torsion bar assembly
4. Dust covers
5. Heat cover (right side only)
6. Torsion bar

TSB Revision

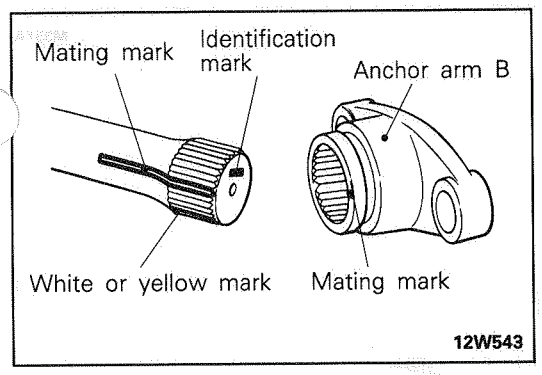

SERVICE POINTS OF INSTALLATION M33SBAB

3. INSTALLATION OF TORSION BAR ASSEMBLY

(1) Check the identification marks at the end of the left and right shock absorbers.
R →for right side
L →for left side

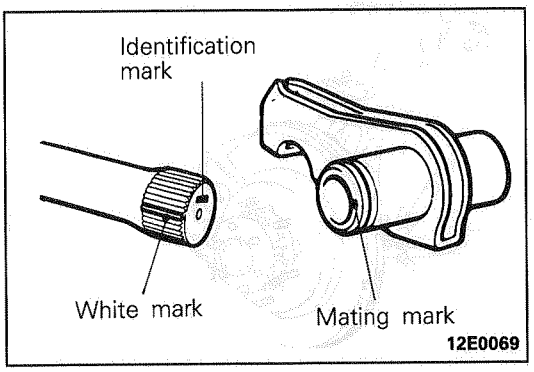

(2) When installing the torsion bar, align the white mark on the serrated section of the torsion bar with the mating mark on the anchor arm.

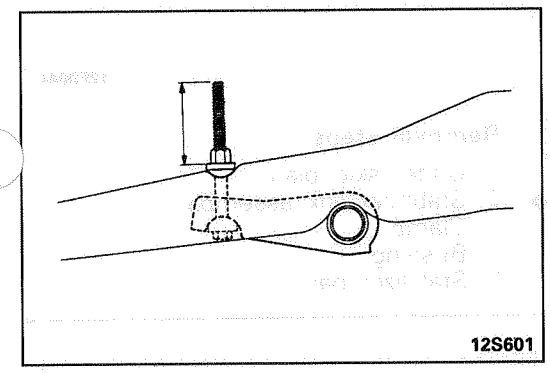

- **ADJUSTMENT OF CLEARANCE BETWEEN BUMP STOPPER AND BUMP STOPPER BRACKET**

(1) Tighten the adjusting nut until the protruding length of the anchor bolt is 80 mm (3.15 in.) or less.

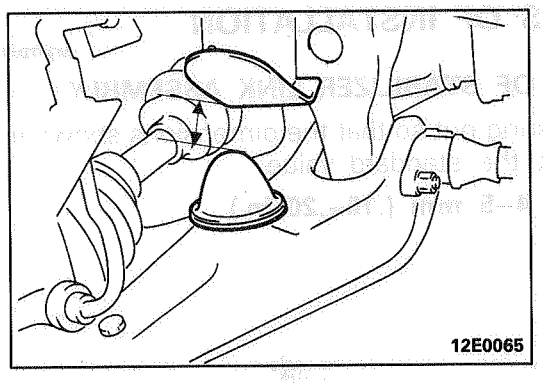

(2) With the vehicle in an unladen condition, measure the distance from the bump stopper to the bump stopper bracket to check if it is at the standard value.

Standard value: 21–23 mm (.83–.91 in.)

(3) If outside the standard value, adjust the anchor bolt with the adjusting nut.

STABILIZER BAR

M33TA--

REMOVAL AND INSTALLATION

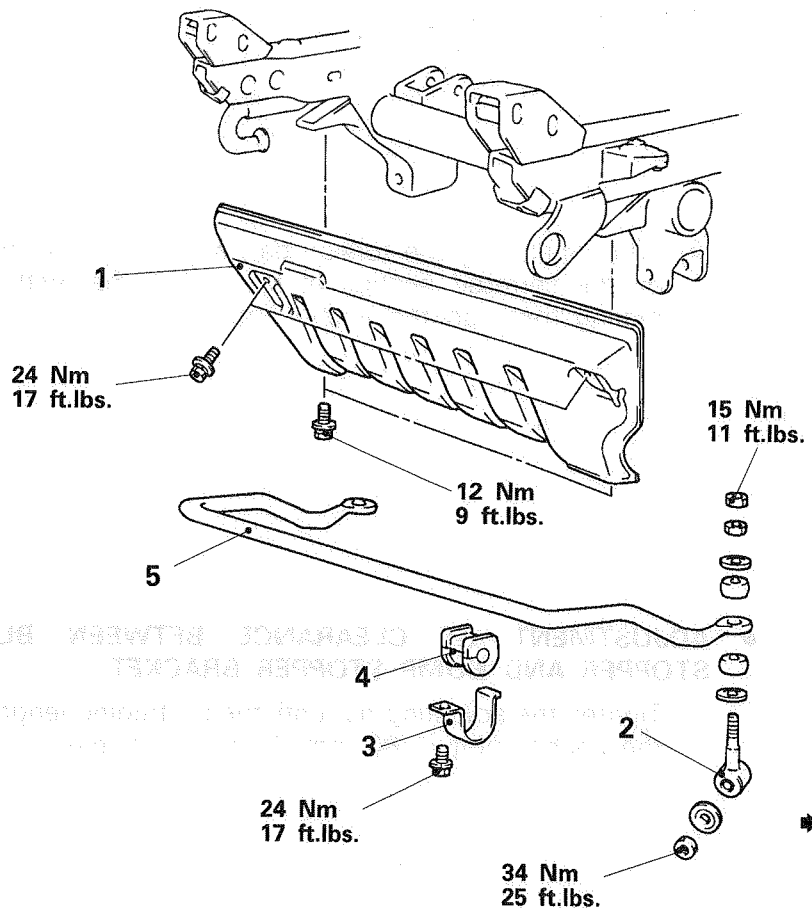

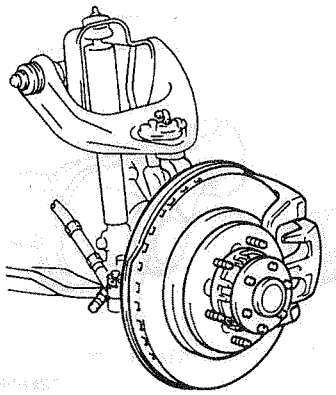

12E0044

Removal steps

1. Under skid plate
2. Stabilizer link assembly
3. Clamp
4. Bushing
5. Stabilizer bar

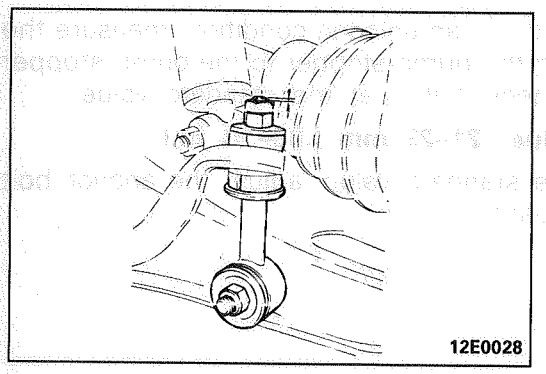

12E0028

SERVICE POINTS OF INSTALLATION

M33TDAP

2. INSTALLATION OF STABILIZER LINK ASSEMBLY

Tighten the adjusting nut so that the dimensions shown in the figure are at the standard value.

Standard value: 4–5 mm (.16–.20 in.)

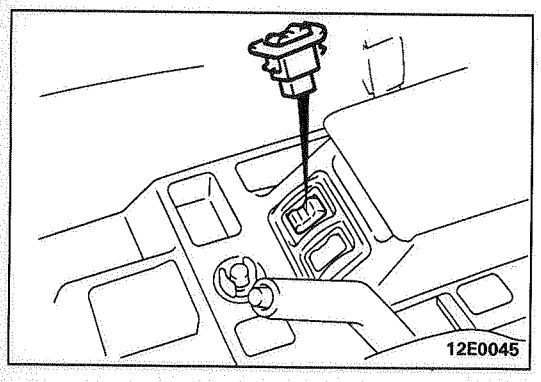

12E0045

CONTROL SWITCH

M33XA--

REMOVAL AND INSTALLATION

TSB Revision

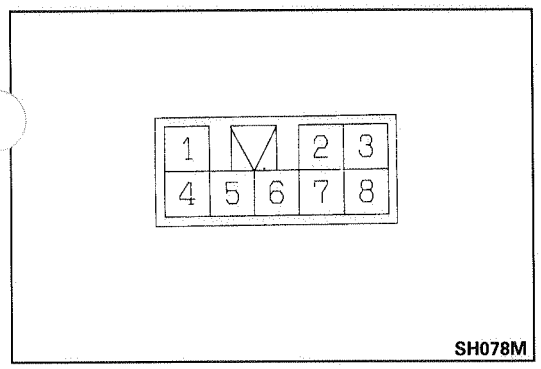

SH078M

INSPECTION

M33XCAA

Operate the switch to check for continuity between terminals.

Switch position \ Terminal	4	5	6	2	7	1
H (Hard)			○—○			
M (Medium)		○——		○		
S (Soft)	○—			○		

NOTE
○–○ indicates that there is continuity between the terminals.

CONTROL UNIT

M33RA--

REMOVAL AND INSTALLATION

Pre-removal and Post-installation Operation
- Removal and Installation of Quarter Trim Lower (Refer to GROUP 52 – Trims.)

<V21, V23>

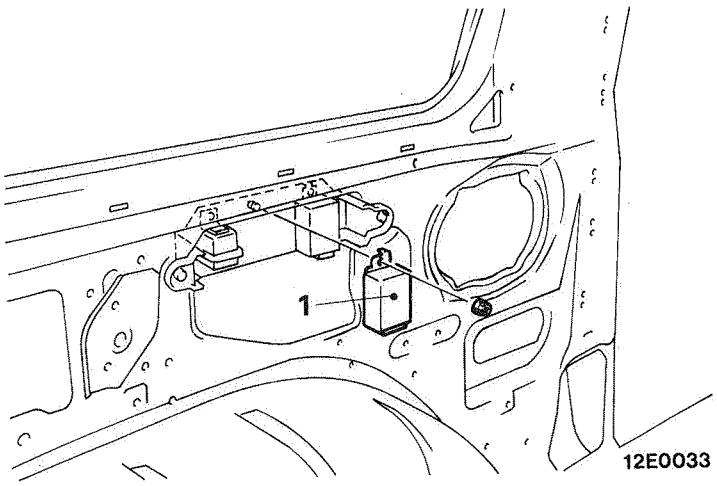

12E0033

<V43>

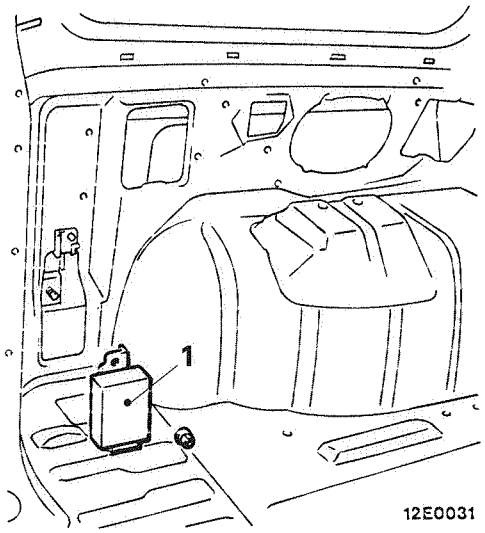

12E0031

1. Control unit

INSPECTION

M33RCAA

Refer to TROUBLESHOOTING.

NOTES

REAR SUSPENSION

CONTENTS

M34AA--

COIL SPRING AND AXLE BUMPER **8**

LOWER ARM **4**
Lower Arm Rear Bushing Replacement 4

SERVICE ADJUSTMENT PROCEDURES **3**
Rear Wheel Alignment 3

SHOCK ABSORBER AND LATERAL ROD **6**
Lateral Rod Bushing Replacement 7

SPECIAL TOOLS **3**

SPECIFICATIONS **2**
General Specifications 2
Service Specifications 2

STABILIZER BAR **9**

TROUBLESHOOTING **3**

SPECIFICATIONS

M34CA--

GENERAL SPECIFICATIONS

Items		Specifications
Suspension system		Coil spring type 3-link rigid axle supension
Coil spring		
Wire dia. × O.D. × free length	mm (in.)	14.2 to 15.8 × 160.2 to 161.8 × 404.5 (.56 to .62 × 6.31 to 6.37 × 15.93)
Coil spring identification color		Green × 1
Spring constant	N/mm (lbs./in.)	27 to 39 (151 to 218)
Shock absorber		
Max. length	mm (in.)	457 (18.0)
Min. length	mm (in.)	297 (11.7)
Stroke	mm (in.)	160 (6.3)
Damping force [at 0.3 m/sec. (0.9 ft./sec.)]		
Expansion	N (lbs.)	2,450 (540) [Hard: 3,350 (739) Medium: 2,450 (540) Soft: 1,750 (386)]
Contraction	N (lbs.)	1,300 (287) [Hard: 1,650 (364) Medium: 1,300 (287) Soft: 900 (198)]

NOTE
[ ] indicates option specifications.

SERVICE SPECIFICATIONS

M34CB--

Items		Specifications
Standard value		
Toe-in	mm (in.)	0 (Non-adjustable)
Camber		0° (Non-adjustable)
Protruding length of stabilizer bar mounting bolt	mm (in.)	15–17 (.59–.67)
Protruding length of shock absorber mounting bolt	mm (in.)	1–2 (.04–.08)
Distance between actuator mounting surface and shock absorber stud end	mm (in.)	1.5–2.5 (.06–.10)

SPECIAL TOOLS

M34DA--

Tool	Number	Name	Use
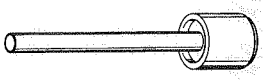	MB991293	Rear suspension bushing arbor	Removal and installation of lower arm rear bushing
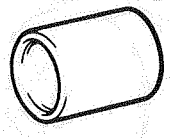	MB990891	Bushing remover/installer base	
	MB990650	Lower arm bushing arbor	Removal and installation of lateral rod bushing

TROUBLESHOOTING

M34EAAA

Refer to GROUP 33 – Troubleshooting.

SERVICE ADJUSTMENT PROCEDURES

M34FAAF

REAR WHEEL ALIGNMENT

The rear suspension assembly must be free of worn, loose or damaged parts prior to measurement of rear wheel alignment.

Standard value:

Toe-in	**0mm (0 in.)**
Camber	**0°**

NOTE
Toe-in and camber are set at the factory and cannot be adjusted.

LOWER ARM

M34HA--

REMOVAL AND INSTALLATION

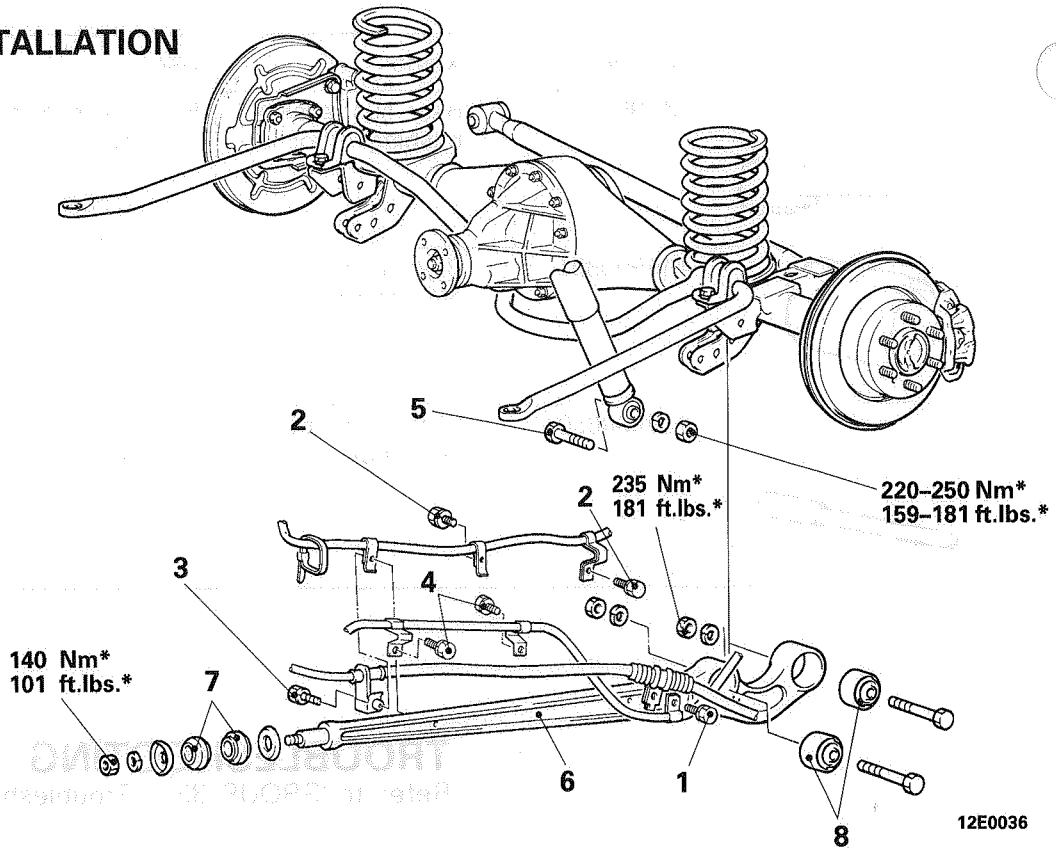

Removal steps

1. Parking brake cable attaching bolt
2. Rear differential lock position harness attaching bolt
3. Parking brake cable attaching bolt
4. Rear sensor attaching bolt (Vehicles with A.B.S.)
5. Shock absorber mounting bolts (lower side)
6. Lower arm
7. Lower arm front bushing
8. Lower arm rear bushing

NOTE

*: Indicates part which should be temporarily tightened, and then fully tightened with the vehicle in the unladen condition.

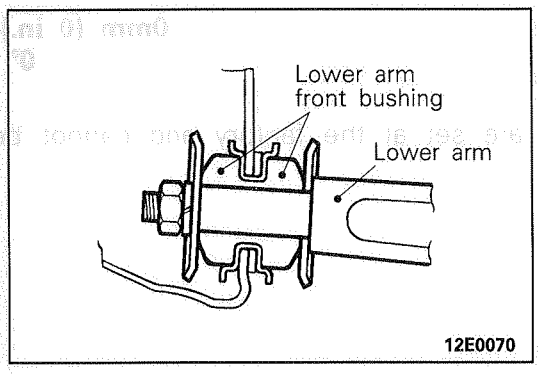

SERVICE POINT OF INSTALLATION M34HDAA

7. INSTALLATION OF LOWER ARM FRONT BUSHING

Install the lower arm front bushing so that its direction will be as shown in the figure.

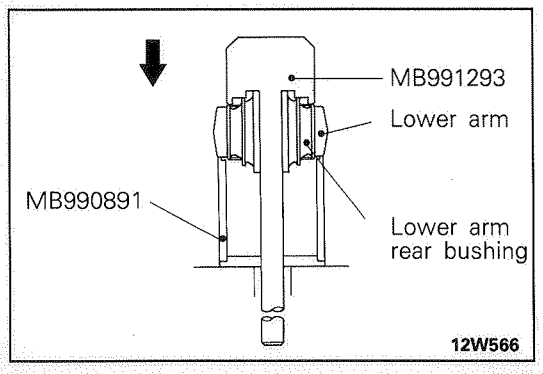

LOWER ARM REAR BUSHING REPLACEMENT

M34HCAF

(1) Drive out the bushing by using the special tools.

TSB Revision

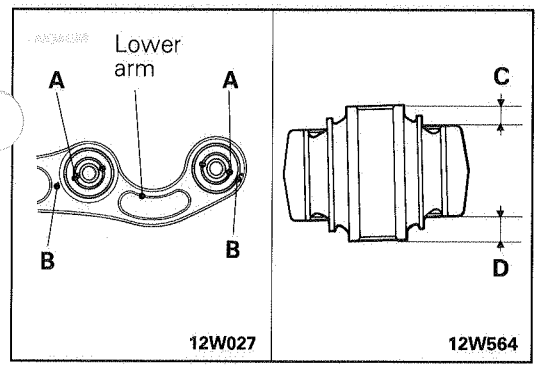

(2) Align, as shown in the figure, the marked location (B) of the lower arm and the hole part (A) of the lower arm rear bushing, and then, by using the special tool, press the lower arm rear bushing onto the lower arm.
Be sure that the difference between the projecting lengths (C – D) should be within 1 mm (.04 in.)

SHOCK ABSORBER AND LATERAL ROD

M34OA--

REMOVAL AND INSTALLATION

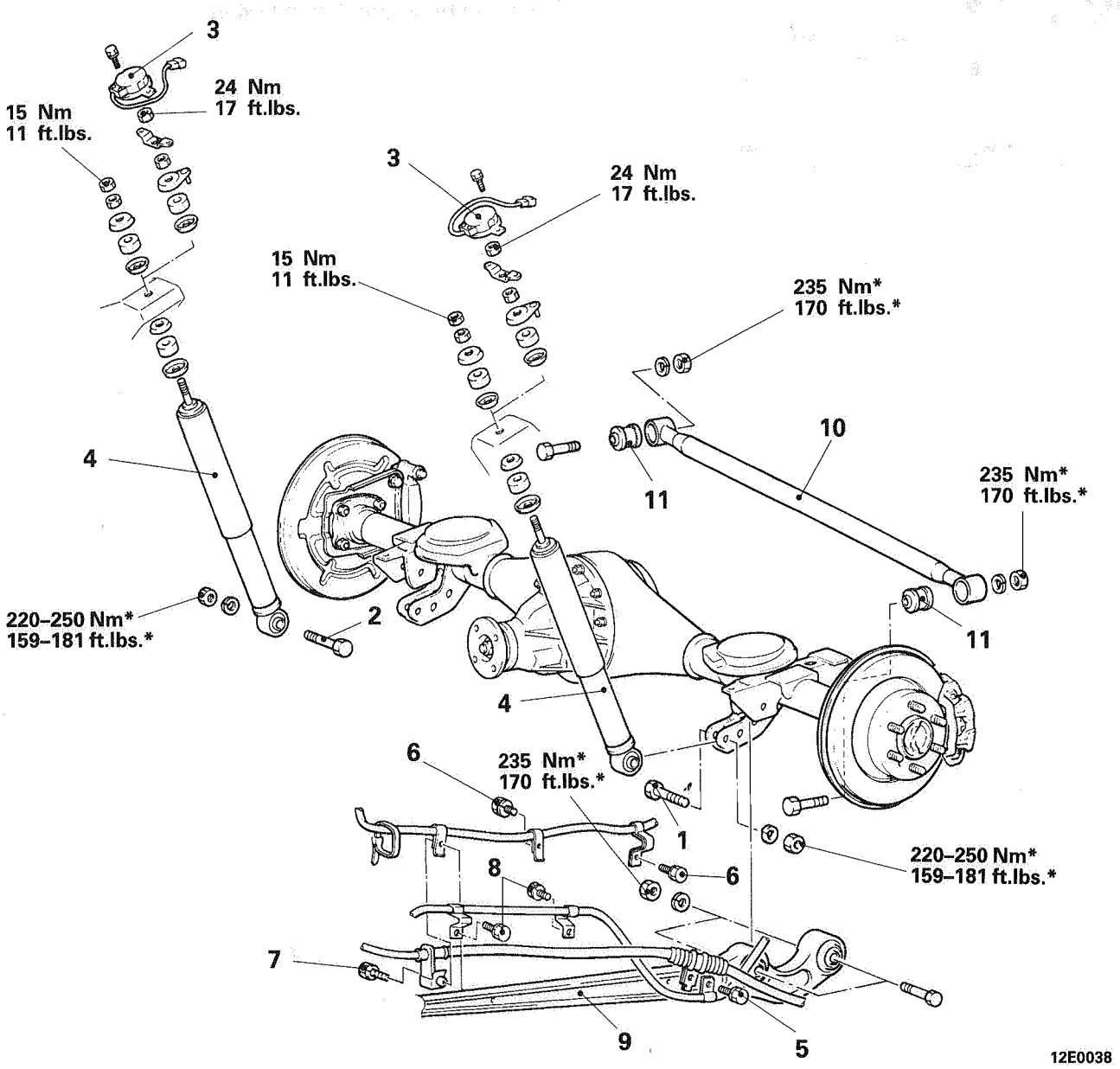

Removal steps of shock absorber

1. Shock absorber mounting bolt (lower left side)
2. Shock absorber mounting bolt (lower right side)
3. Actuator (Vehicles with remote-controlled variable shock absorbers)
4. Shock absorber

Removal steps of lateral rod

1. Shock absorber mounting bolt (lower left side)
5. Parking brake cable attaching bolt (LH side)
6. Rear differential lock position harness attaching bolt
7. Parking brake cable attaching bolt (LH side)
8. Rear sensor attaching bolt (Vehicles with A.B.S.)
9. Lower arm
10. Lateral rod
11. Lateral rod bushing

NOTE

*: Indicates part which should be temporarily tightened and then fully tightened with the vehicle in the unladen condition.

TSB Revision

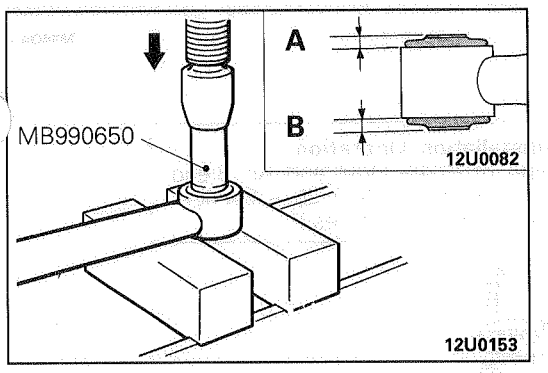

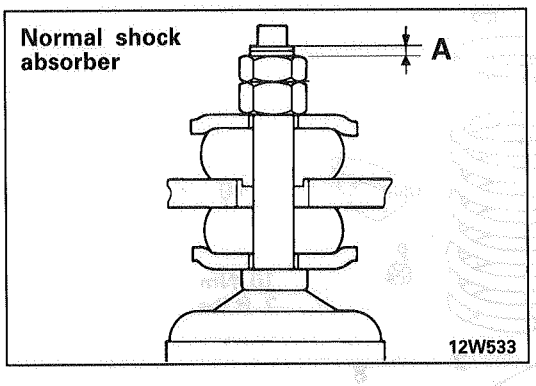

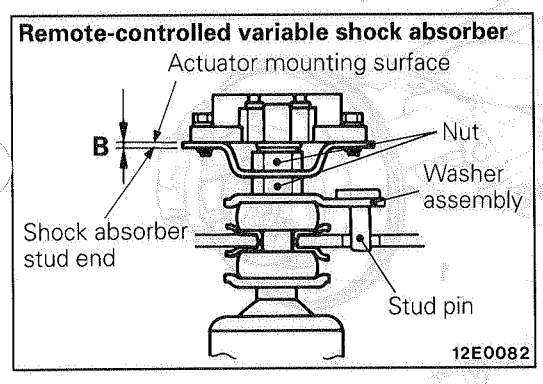

LATERAL ROD BUSHING REPLACEMENT E34OEAD

(1) Use the special tool to drive out and press in the lateral rod bushing.
(2) Be careful that the difference (A – B) in bushing projection distances does not exceed the following value.

A – B = 0±1.0 mm (0±.04 in.)

Caution
When pressing in the bushing, apply a sufficient amount of liquid soap to the inside of the lateral rod eyes and the rubber area of the bushing.

SERVICE POINTS OF INSTALLATION M34ODAB

4. INSTALLATION OF SHOCK ABSORBER/3. ACTUATOR (VEHICLES WITH REMOTE-CONTROLLED VARIABLE SHOCK ABSORBERS)

Tighten the nut so that the values shown in the figure (A and B) are at the standard value.

Standard value A: 1–2 mm (.04–.08 in.)
B: 1.5–2.5 mm (.06–.10 in.)

Caution
When tightening the nut, be careful not to bend the stud pin of the washer assembly.

COIL SPRING AND AXLE BUMPER

M34QA--

REMOVAL AND INSTALLATION

Post-installation Operation
- Filling of Brake Fluid and Air Bleeding (Refer to GROUP 35 – Service Adjustment Procedures.)

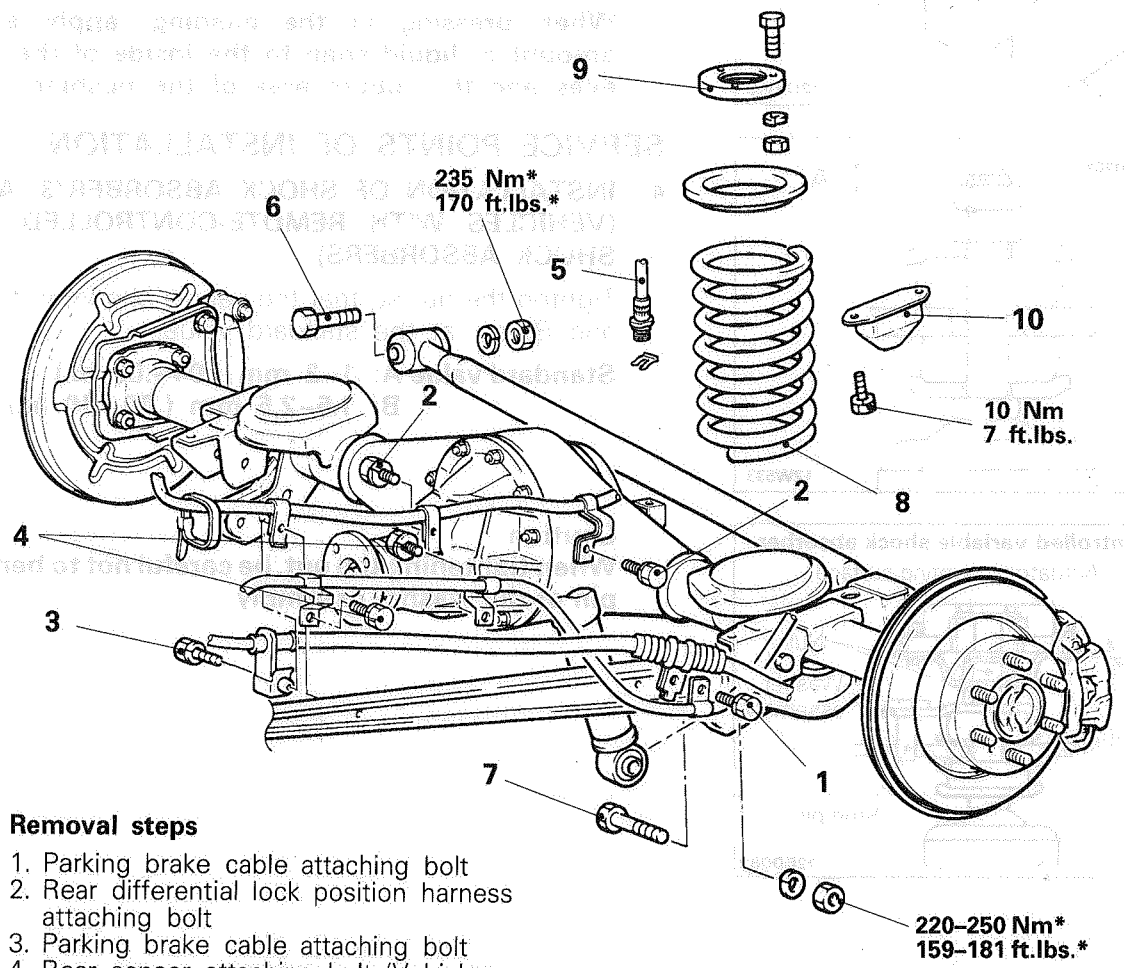

12E0037

Removal steps

1. Parking brake cable attaching bolt
2. Rear differential lock position harness attaching bolt
3. Parking brake cable attaching bolt
4. Rear sensor attaching bolt (Vehicles with A.B.S.)
5. Brake hose connection
6. Lateral rod mounting bolt (body side only)
7. Shock absorber mounting bolt (lower side only)
- ◀■▶ 8. Coil spring
9. Rear spring pad
10. Helper rubber

NOTE

*: Indicates part which should be temporarily tightened, and then fully tightened with the vehicle in the unladen condition.

SERVICE POINT OF REMOVAL

M34QBAB

8. REMOVAL OF COIL SPRING

Slowly lower the jack supporting the axle housing, and remove the coil spring and rear spring pad.

TSB Revision

STABILIZER BAR

M34IA--

REMOVAL AND INSTALLATION

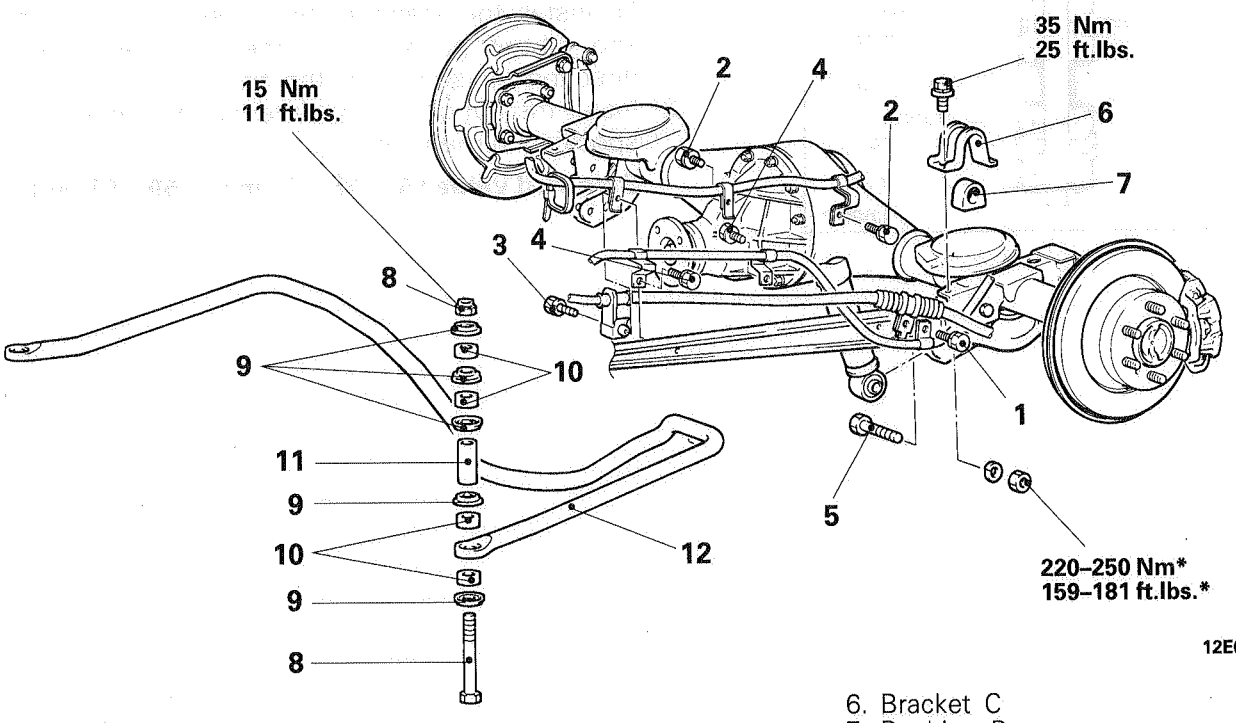

Removal steps

1. Parking brake cable attaching bolt
2. Rear differential lock position harness attaching bolt
3. Parking brake cable attaching bolt
4. Rear sensor attaching bolt (Vehicles with A.B.S.)
5. Shock absorber mounting bolts (lower side)
6. Bracket C
7. Bushing B

◆◆ 8. Stabilizer bar mounting bolt and nut

9. Joint cup
10. Rubber bushing
11. Collar

◆◆ 12. Stabilizer bar

NOTE

*: Indicates part which should be temporarily tightened, and then fully tightened with the vehicle in the unladen condition.

SERVICE POINT OF REMOVAL

M34IDAC

12. REMOVAL OF STABILIZER BAR

Slowly lower the jack and remove the stabilizer bar to the vehicle right side.

Caution
When lowering the jack, take care not to damage the rear brake pipe between the main brake pipe and the rear axle housing.

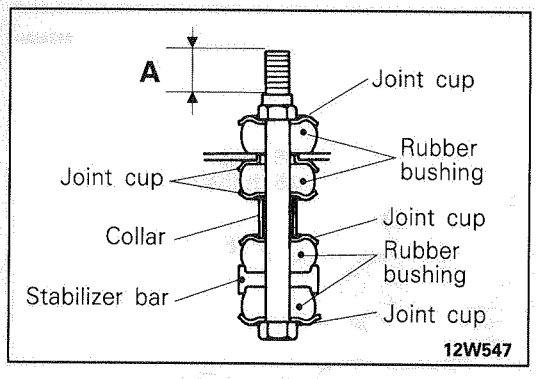

SERVICE POINT OF INSTALLATION M34ICAE

8. INSTALLATION OF STABILIZER BAR MOUNTING BOLT AND NUT

(1) To install the stabilizer bar, assemble the joint cups and rubber bushings by the order and the certain direction as shown in the figure.

(2) Install the nut on the stabilizer bar mounting bolt to the specified dimensions.

Standard value (A): 15–17 mm (.59–.67 in.)

SERVICE BRAKES

CONTENTS

M35AA--

ANTI-LOCK BRAKING SYSTEM TROUBLESHOOTING 6

BRAKE LINE 62

BRAKE PEDAL 55

ELECTRONIC CONTROL UNIT <ABS> 78

FRONT DISC BRAKE 64

G-SENSOR <ABS> 74

HYDRAULIC UNIT <ABS> 73

MASTER CYLINDER AND BRAKE BOOSTER 57

REAR DISC BRAKE 69

SERVICE ADJUSTMENT PROCEDURES 39

- ABS Power Relay Check <ABS> 53
- Bleeding 42
- Brake Booster Operating Test 39
- Brake Drum Inside Diameter Check 48
- Brake Fluid Level Sensor Check 40
- Brake Lining and Brake Drum Connection Check 48
- Brake Lining Thickness Check 48
- Brake Pedal Inspection and Adjustment 39
- Check Valve Operation Check 40
- Disc Brake Pad Check 43
- Front Brake Disc Run-out Check 45
- Front Brake Disc Thickness Check 45
- Front Disc Brake Pad Replacement and Brake Drag Check 43
- G-sensor Output Voltage Check <ABS> 53
- Hydraulic Unit Check <ABS> 51
- Load Sensing Proportioning Valve Function Test 41
- Load Sensing Spring Length Check and Adjustment 41
- Rear Brake Disc Run-out Check 47
- Rear Brake Disc Run-out Correction 47
- Rear Brake Disc Thickness Check 47
- Rear Disc Brake Pad Check and Replacement 45
- Valve Relay and Motor Relay Check <ABS> 53
- Wheel Speed Sensor Output Voltage Measurement <ABS> 49

SPECIAL TOOLS 4

SPECIFICATIONS 2

- General Specifications 2
- Lubricants 3
- Sealants 3
- Service Specifications 2

TROUBLESHOOTING 4

- Brake Drag
- Groaning, Clicking or Rattling Noise When Brakes Are Not Applied
- Increased Pedal Stroke (Reduced Pedal to Floorboard Clearance)
- Insufficient Braking Power
- Scraping or Grinding Noise When Brakes Are Applied
- Squealing, Groaning or Chattering Noise When Brakes Are Applied
- Squealing Noise When Brakes Are Not Applied
- Vehicle Pulls to One Side When Brakes Are Applied

WHEEL SPEED SENSOR <ABS> 75

SPECIFICATIONS

GENERAL SPECIFICATIONS

M35CA--

Items	Specifications
Master cylinder	
Type	Tandem Type (with level sensor)
I.D. mm (in.)	23.8 (15/16)
Brake booster	
Type	Vacuum Type, tandem
Effective dia. of power cylinder mm (in.)	205 + 230 (8 + 9)
Boosting ratio	6.0
Proporting valve type	Load sensing proporting type
Front brakes	
Type	Floating caliper, dual pistons, ventilated disc (M-R57W)
Disc effective dia. × thickness mm (in.)	228 × 24 (8.98 × .94)
Wheel cylinder I.D. mm (in.)	42.8 (1 11/16) × 2
Lining thickness mm (in.)	10 (.39)
Clearance adjustment	Automatic
Rear brakes	
Type	Floating caliper, single piston, solid disc (M-R59S)
Disc effective dia. × thickness mm (in.)	272 × 18 (10.71 × .71)
Wheel cylinder I.D. mm (in.)	42.8 (1 11/16)
Lining thickness mm (in.)	9 (.354)
Clearance adjustment	Automatic
ABS	
Rotor teeth front	110
rear	110
Speed sensor type	Magnet coil type

SERVICE SPECIFICATIONS

M35CB--

Items	Specifications
Standard value	
Brake pedal height mm (in.)	186–191 (7.3–7.5)
Brake pedal to toeboard clearance mm (in.)	100 (3.94) or more
Brake pedal free play mm (in.)	3–8 (.12–.32)
Load sensing spring length mm (in.)	224–228 (8.8–9.0)
Load sensing proportioning valve output pressure	
When load sensing spring length is 226.7 mm (8.9 in.)	
Input pressure MPa (psi)	
at 10 (1,422)	6.14–7.04 (873.3–1,001.3)
at 18 (2,560)	7.94–9.24 (1,129.3–1,314.2)

Items		Specifications
When load sensing spring length is 257.7 mm (10.1 in.)		
Input pressure	MPa (psi)	
	at 18 (2,560)	13.1–15.1 (1,863.3–2,147.7)
Booster push rod to master cylinder piston clearance	mm (in.)	0.65–0.90 (.026–.035)
Brake dragging force	N (lbs.)	57 (13) or less
[Brake dragging torque]	Nm (ft.lbs.)	[4 (3)] or less
Pad thickness	mm (in.)	
Front		10.0 (.39)
Rear		9.0 (.35)
Disc thickness	mm (in.)	
Front		24 (.94)
Rear		18 (.71)
Lining thickness	mm (in.)	6.5 (.256)
Brake drum inside diameter	mm (in.)	197 (7.756)
Limit		
Pad thickness	mm (in.)	2.0 (.079)
Disc thickness	mm (in.)	
Front		22.4 (.882)
Rear		16.4 (.646)
Brake disc runout	mm (in.)	
Front		0.1 (.0039)
Rear		0.08 (.0031)
Hub axial play	mm (in.)	0.25 (.0098)
Lining thickness	mm (in.)	4.5 (.177)
Brake drum inside diameter	mm (in.)	198 (7.795)

LUBRICANTS

M35CD--

Items	Specified lubricant
Brake fluid	DOT3 or DOT4
Brake piston boot inner surfaces Lock pin boot inner surfaces Guide pin boot inner surfaces	Repair kit grease

SEALANTS

M35CE--

Items	Specified sealants
Thread part of fitting	3M ATD Part No. 8663, 8661 or equivalent

SPECIAL TOOLS

M35DA--

Tool	Number	Name	Use
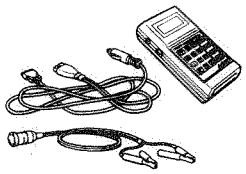	MB991341	Multi-use tester assembly	For checking of A.B.S.
	MB991423	ROM pack	

TROUBLESHOOTING

M35EAAM

Symptom	Probable cause	Remedy
Vehicle pulls to one side when brakes are applied	Grease or oil on pad	Replace
	Inadequate contact of pad	Correct
Insufficient braking power	Low or deteriorated brake fluid	Refill or change
	Air in brake system	Bleed air
	Vapor lock caused by dragging of the pad	Correct
	Grease or oil on pad	Replace
	Inadequate contact of pad	Correct
	Brake booster malfunction	Correct
	Colgged brake line	Correct
	Proportioning valve malfunction	Replace
Increased pedal stroke (Reduced pedal to floorboard clearance)	Air in brake system	Bleed air
	Worn pad	Replace
	Excessive push rod to master cylinder clearance	Adjust
	Faulty master cylinder	Replace
Brake drag	Incomplete release of parking brake	Correct
	Incorrect parking brake adjustment	Adjust
	Worn brake pedal return spring	Replace
	Lack of lubrication in sliding parts	Lubricate
	Improper push rod to master cylinder clearance	Adjust
	Faulty master cylinder piston return spring	Replace
	Clogged master cylinder return port	Correct

Symptom	Probable cause	Remedy
Scraping or grinding noise when brakes are applied	Worn brake pad	Replace
	Caliper to wheel interference	Correct or replace
	Dust cover to disc interference	Correct or replace
	Bent brake backing plate	Correct or replace
	Cracked brake disc	Correct or replace
Squealing, groaning or chattering noise when brakes are applied	Missing or damaged brake pad anti-squeak shim	Replace
	Brake discs and pads worn or scored	Correct or replace
	Burred or rusted calipers	Clean or deburr
	Incorrect brake pedal or booster push rod	Adjust
Squealing noise when brakes are not applied	Bent or loose backing plate	Replace
	Dust cover or brake disc contact	Correct
	Rusted, stuck	Lubricate or replace
	Worn, damaged or insufficiently lubricated wheel bearings	Lubricate or replace
	Improper positioning of pads in caliper	Correct
	Improper installation of support mounting to caliper body	Correct
	Poor return of brake booster or master cylinder or wheel cylinder	Replace
Groaning, clicking or rattling noise when brakes are not applied	Stones or foreign material trapped inside wheel covers	Remove stones, etc.
	Loose wheel nuts	Retighten
	Failure of pad shim	Replace
	Worn, damaged or dry wheel bearings	Lubricate or replace

ANTI-LOCK BRAKING SYSTEM TROUBLESHOOTING

M35EBAG

PARTICULAR PHENOMENA OF THE ANTI-LOCK BRAKING SYSTEM

Models equipped with the anti-lock braking system (A.B.S.) may exhibit one or more of the following phenomena from time to time, but none of these are abnormal.

(1) A pulsing feeling in the brake pedal, or vibration of the body or the steering wheel, when the anti-lock braking system is activated by sudden braking or by braking on a slippery road surface. Actually, this phenomenon is an indication that the A.B.S. is functioning normally.

(2) When the vehicle speed reaches approximately 8 km/h (5 mph) after the engine is started and the vehicle starts off (for the first time), a whining motor noise may be heard from the engine compartment if the vehicle is traveling in a quiet place, but this noise is simply the result of a self-check being made of the A.B.S. operation.

TROUBLESHOOTING METHODS

Problems related to the A.B.S. can be classified into two general categories: problems in the electrical system and those in the hydraulic system.

For problems in the electrical system the selfdiagnosis function is built into the electronic control unit (E.C.U.), causing the A.B.S. warning light to illuminate as a warning to the driver. In this instance, checks can be made by using the multi-use tester and oscilloscope.

Problems in the hydraulic system (poor braking, etc.) can be located in the same way as for ordinary brakes. There is, however, the necessity to check to determine whether the problem is related to ordinary brake components or to the components related to the A.B.S. To make this check, use the multi-use tester.

HOW TO USE THE TROUBLESHOOTING FLOW CHART

(1) Following the flow chart, first refer to the illumination pattern of the ABS warning light, and next note the diagnosis code and inspect the brake operation.

(2) Follow the inspection charts listed in the "Remedy" column to carry out an inspection. In each inspection chart, [Comment] and (Hint) are listed for troubleshooting reference.

NOTE
ECU: Electronic control unit

Check the trouble symptoms by the following procedure, and inspect according to the instructions.

Before the engine starts, does the ABS warning light illuminate?

(1) With the ignition key in the "ON" position, the ABS-ECU causes the ABS warning light to illuminate for approximately 1 second (during this time, the initial check is carried out), and then the light switches off.

(2) With the ignition key in the "START" position, power to the ABS-ECU is cut, and because the valve relay turns OFF, the ABS warning light remains illuminated.

(3) When the ignition key is turned from the "START" position back to the "ON" position, the ABS warning light illuminates for approximately 1 second (during this time, the initial check is carried out once more), and then the light switches off.

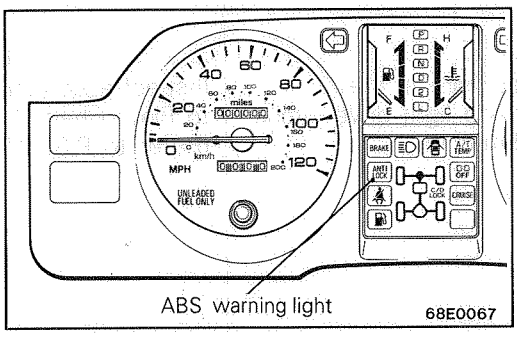

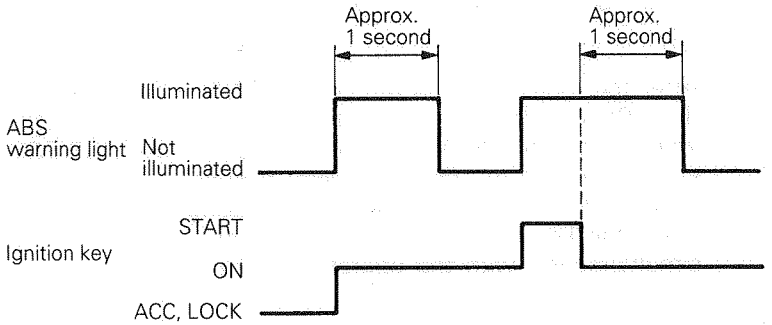

Yes → To next page

No ↓

No.	Trouble symptom	Main cause	Remedy
1	The ABS warning light does not illuminate at all. 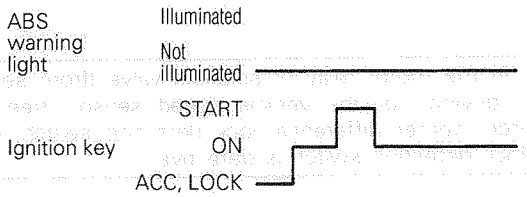	• ABS warning light bulb failure. • Broken wire in the ABS warning light power circuit (including blown fuse).	Inspect according to Flow Chart A (Refer to P.35-14).
2	When the ignition key is turned to "ON", the ABS warning light remains illuminated. 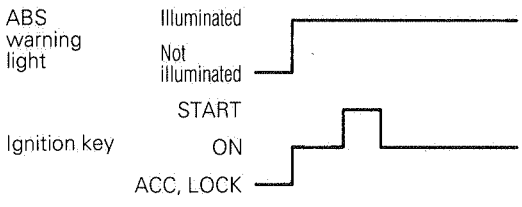	• Fail safe function is operated by the ABS-ECU self-diagnosis. • Short in the ABS-ECU warning light drive circuit • ABS-ECU is defective	Inspect according to Flow Chart B (Refer to P.35-17).

No.	Trouble symptom	Main cause	Remedy
3	When the ignition key is turned to "START", the ABS warning light does not illuminate. 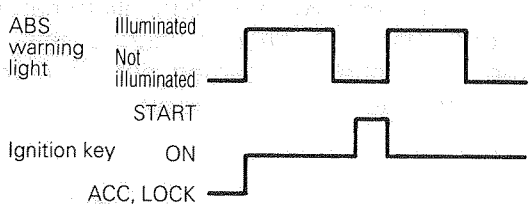	• Valve relay is defective • Broken harness wire between the ABS warning light and the hydraulic unit • Broken harness wire between the hydraulic unit and the ground	Inspect according to Flow Chart C (Refer to P.35-19).
4	After the ignition key is turned to "ON", the ABS warning light blinks twice, and when turned to "START", it illuminates. When returned to "ON", the light flashes once, and then switches off. (The blinking when the key is turned to "ON" occurs simultaneously with the operation noise from the valve relay) 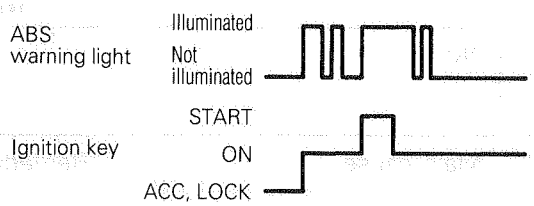	• Broken harness wire in the ABS-ECU warning light drive circuit • ABS-ECU is defective	Inspect according to Flow Chart D (Refer to P.35-20).

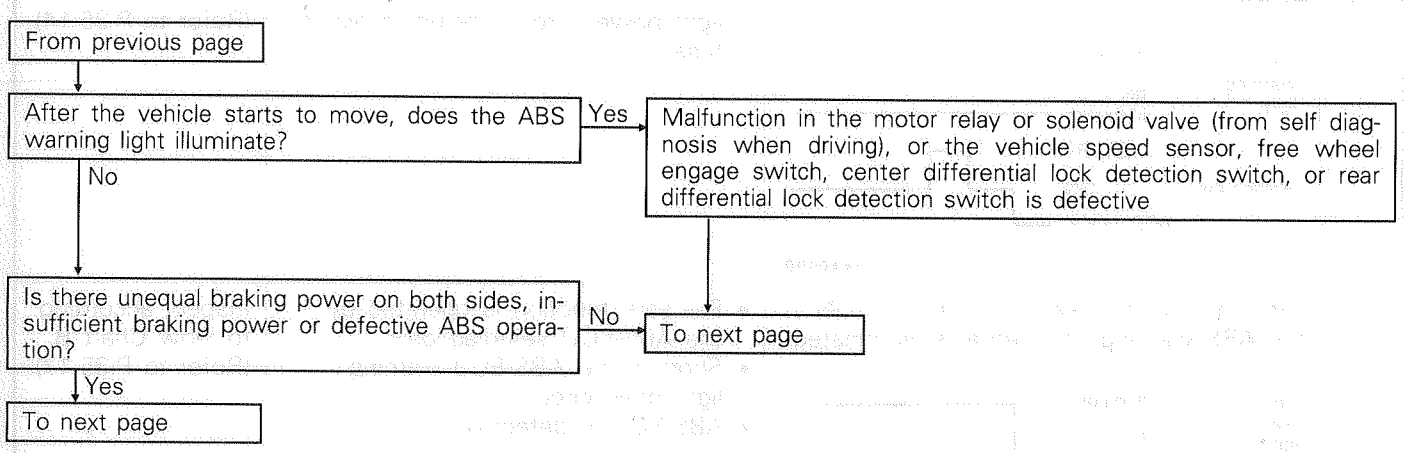

From previous page

Trouble symptom	Main cause	Remedy
Unequal braking power Insufficient braking power	• Blocked pressure circuit inside the hydraulic unit. • Mechanical lock in the hydraulic unit solenoid valve.	Follow the hydraulic unit operation inspection (refer to P.35-50) and replace the hydraulic unit if necessary. If the hydraulic unit is normal, inspect the components of the normal brake.
Decline in ABS function	• Blocked pressure circuit inside the hydraulic unit. • Operation of the hydraulic unit solenoid valve is defective.	
ABS operates even when not carrying out sudden braking (ABS operating vibration starts to be felt).	• Insufficient wheel speed sensor output voltage (sensor is defective, excessive clearance between the sensor and rotor, or rotor is chipped). • ABS-ECU is defective	Inspect the wheel speed sensor (refer to P.35-48), and replace the sensor or adjust the sensor clearance if necessary. If the problem occurs frequently even though the sensor is normal, then replace the ABS-ECU.

From previous page

After conducting the driving test, carry out an inspection by self-diagnosis (P.35-10.).

Is a normal code output instead of a malfunction code?

No No diagnosis output → Inspect and repair the harness between the ABS-ECU serial/diagnosis output terminal and the diagnosis check connector.

No Malfunction code is output → A malfunction has occurred previously.
NOTE
Be sure to make a note of the malfunction code reading.
→ Refer to the malfunction code inspection charts (E1–E13) and establish whether the malfunction recurs or if it was only transient.
→ If the malfunction doesn't recur, erase the malfunction code memory, and watch for the malfunction to reappear (Refer to P.35-11).

Yes → ABS functions are all normal (Memory does not show a malfunction occurring previously also.)

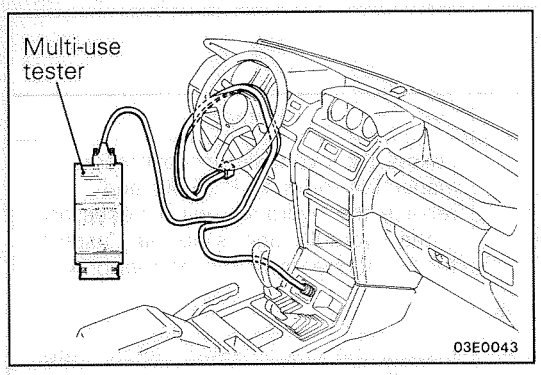

INSPECTION BY SELF-DIAGNOSIS

WHEN USING THE MULTI-USE TESTER

1. Turn the ignition key to ACC and connect the multi-use tester as shown in the illustration.

   Caution
   Make certain that the ignition switch is OFF when the multi-use tester is connected or disconnected.

2. Start the engine, and select the ABS system.
3. Read and make a note of the diagnosis output codes.
   If the ABS-ECU and multi-use tester cannot communicate, inspect the harness between diagnosis connector and the ABS-ECU power circuit or the ABS-ECU.
4. Momentarily erase the diagnosis code memory. (Refer to P.35-11.)
   If the memory cannot be erased, the function is being stopped by a malfunction that is currently displaying a malfunction code. If the memory can be erased, then the malfunction was only temporary, or it is a malfunction that can only be detected while driving.
5. If the malfunction code is not erased, or if the ABS function is stopped by a repeated driving test and a malfunction code is output, inspect according to the malfunction code inspection charts (E-1–E-13).

   NOTE
   The codes below are output as diagnosis codes according to the vehicle's condition, even when the ABS system is normal. These codes are output only for a current malfunction, and if the vehicle's condition returns to normal, malfunction code will be erased automatically.

WHEN USING A VOLTMETER

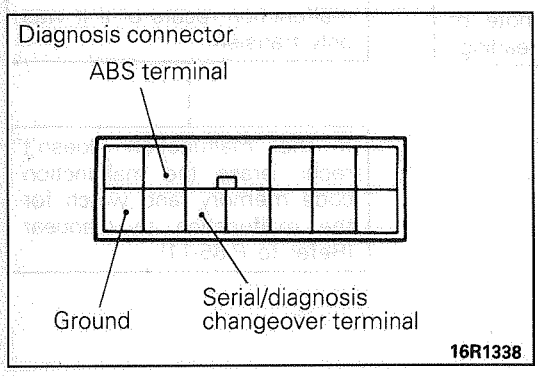

1. With the engine idling, take a reading of the voltage output pattern between the ABS terminal of the diagnosis connector and the ground, as shown in the illustration at left.

   NOTE
   - When the serial/diagnosis terminal is open, output can be read by the voltmeter.

2. Momentarily erase the diagnosis code memory. (Refer to P.35-11.)
   If the memory cannot be erased, the function is being stopped by a problem that is currently displaying a malfunction code. If the memory can be erased, then the problem was only temporary, or it is a problem that can only be detected while driving.
3. If the malfunction code is not erased, or if the ABS function is stopped by a repeated driving test and a malfunction code is output, inspect according to the malfunction code inspection chart.

   NOTE
   Malfunction code 16 (abnormal battery voltage) is output as a diagnosis code according to the vehicle's condition, even when the ABS system is normal. This code is output only for a current problem, and if the vehicle's condition returns to normal, then the malfunction code will be automatically erased.

METHOD OF ERASING THE DIAGNOSIS CODE MEMORY

Caution
When repairs are completed, the diagnosis code memory should be erased. When the ABS-ECU function is stopped, the malfunction code memory cannot be erased, so the function should be continuing while inspection and repair is being carried out.

WHEN USING THE MULTI-USE TESTER

1. Erase the memory with the multi-use tester.
   NOTE
   After erasing the memory, a command cannot be received from the multi-use tester. When checking diagnosis codes, momentarily stop and restart the engine, and then reactivate the multi-use tester.
2. Check the diagnosis codes to check that the memory has been erased.

WHEN NOT USING THE MULTI-USE TESTER

1. Remove the battery (–) terminal for 10 seconds or more.
2. Check the diagnosis code and check to be sure that the memory has been erased.

DIAGNOSIS CODE REFERENCE TABLE

DIAGNOSIS RESULT DISPLAY ITEMS WHEN USING THE MULTI-USE TESTER

Diagnosis code no.	Name of inspection chart or remedy	Reference page	Diagnosis code no.	Name of inspection chart or remedy	Reference page
11	E–1	P.35-21	27	E–7	P.35-29
12			31	E–8	P.35–31
13			32	E–9	P.35–32
14			33	E–10	P.35–35
15	E–2	P.35-22	41	E–11	P.35–36
16	E–4	P.35-25	43		
21	E–3	P.35-23	45		
22			51	E–12	P.35–37
23			52	E–13	P.35–38
24			63	Replace the ABS-ECU	—
25	E–5	P.35-26	64		
26	E–6	P.35-27			

DIAGNOSIS RESULT DISPLAY METHOD WHEN USING A VOLTMETER

Example of diagnosis code voltage pattern	Normal voltage pattern
For diagnosis code no. 24 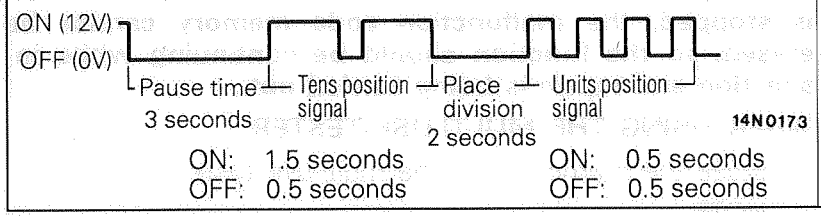 ON: 1.5 seconds OFF: 0.5 seconds ON: 0.5 seconds OFF: 0.5 seconds	 Continuous ON, OFF signals at intervals of 0.5 seconds

NOTE
Other diagnosis codes also are output as voltage patterns corresponding to the same code numbers as when using a multi-use tester.

DIAGNOSIS CODE DISPLAY METHOD

All problem codes that are in memory are displayed.

NOTE
(1) Diagnosis code no. 16 (abnormally low or abnormally high voltage) is only displayed when there is a current problem. (Past occurrences are not recorded in memory.)
(2) Even if identical codes are output continuously, the code is only displayed one time.

SERVICE DATA INSPECTION TABLE

The following items can be read by the multi-use tester from the ABS-ECU input data.

Service data item		Display units
No.	Item	
11	Front right wheel speed	km/H
12	Front left wheel speed	km/H
13	Rear right wheel speed	km/H
14	Rear left wheel speed	km/H
16	ABS-ECU power voltage	V
25	ON/OFF condition of free wheel engage switch	ON/OFF
26	ON/OFF condition of centre differential lock detection switch	ON/OFF
27	ON/OFF condition of rear differential lock detection switch	ON/OFF
32	G sensor output voltage	V
33	ON/OFF condition of stop light switch	ON/OFF

ACTUATOR TEST FUNCTION

By using the multi-use tester, the following force-activation of the actuator can be performed.
By using this function, function checking of the hydraulic unit can be done without the need for special devices such as a hydraulic unit checker (MB991131).

NOTE
(1) When the ABS-ECU function is stopped, actuator testing cannot be carried out.
(2) Actuator testing can be carried out only when the vehicle is stopped.
(3) During actuator testing, if the maximum vehicle wheel speed reaches 10 km/h (6 mph), the test will be cancelled.
(4) During actuator testing, the ABS warning light illuminates, and ABS control is interrupted.

ACTUATOR TEST SPECIFICATIONS

No.	Driving objective		Driving pattern
01	Solenoid valves and pump motors for each corresponding channel in the hydraulic unit	Solenoid valve for front left wheel	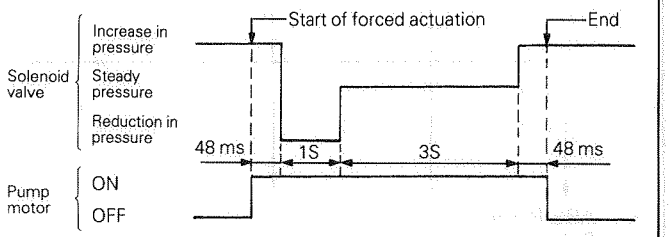
02		Solenoid valve for front right wheel	
03		Solenoid valve for rear wheels	

A ABS warning light does not illuminate at all

[Comment] When the light does not illuminate at all, there is a strong possibility that there is a malfunction of the ABS warning light or the power supply.

(Hint) If other warning light also do not illuminate, it is probably a blown fuse.

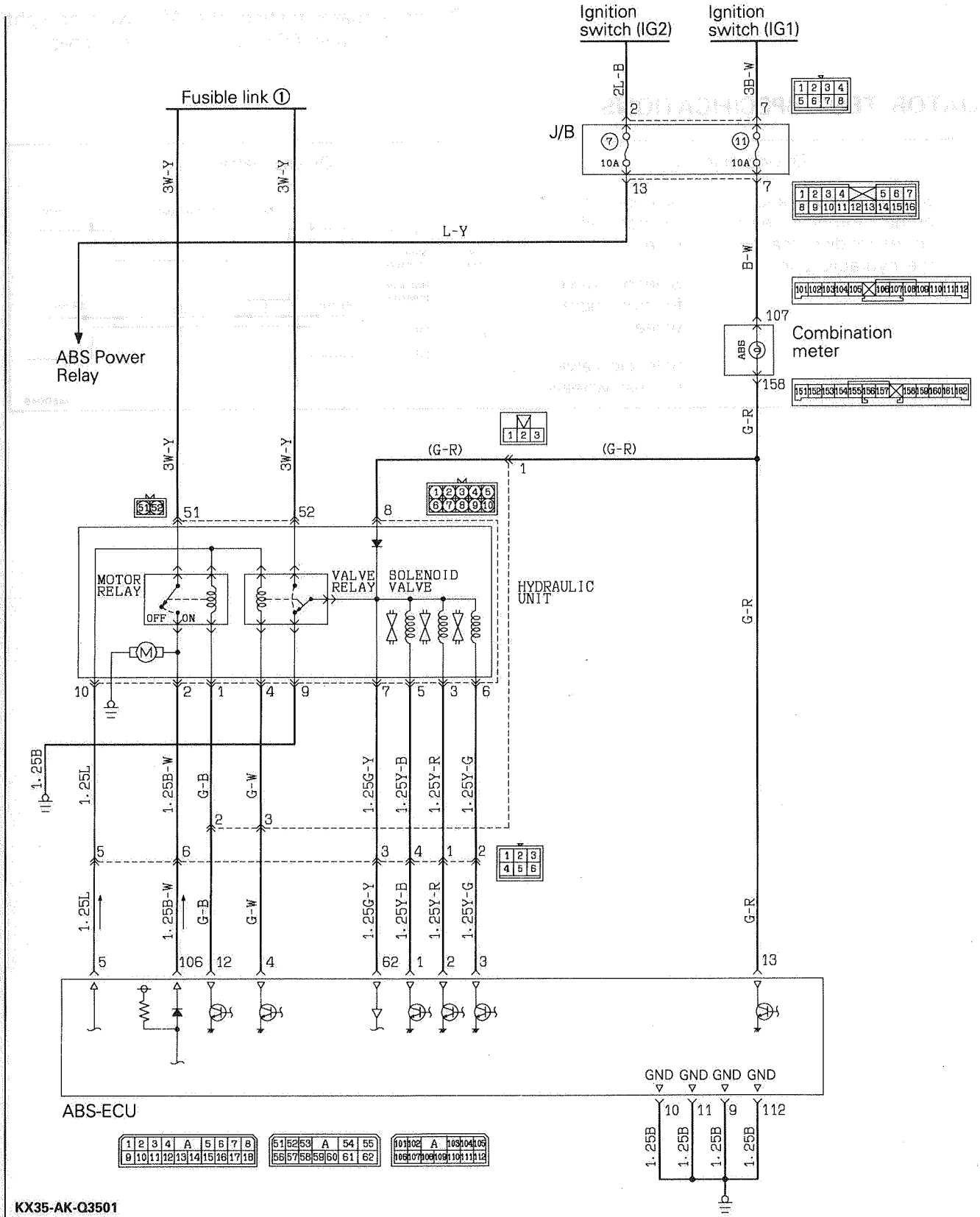

KX35-AK-Q3501

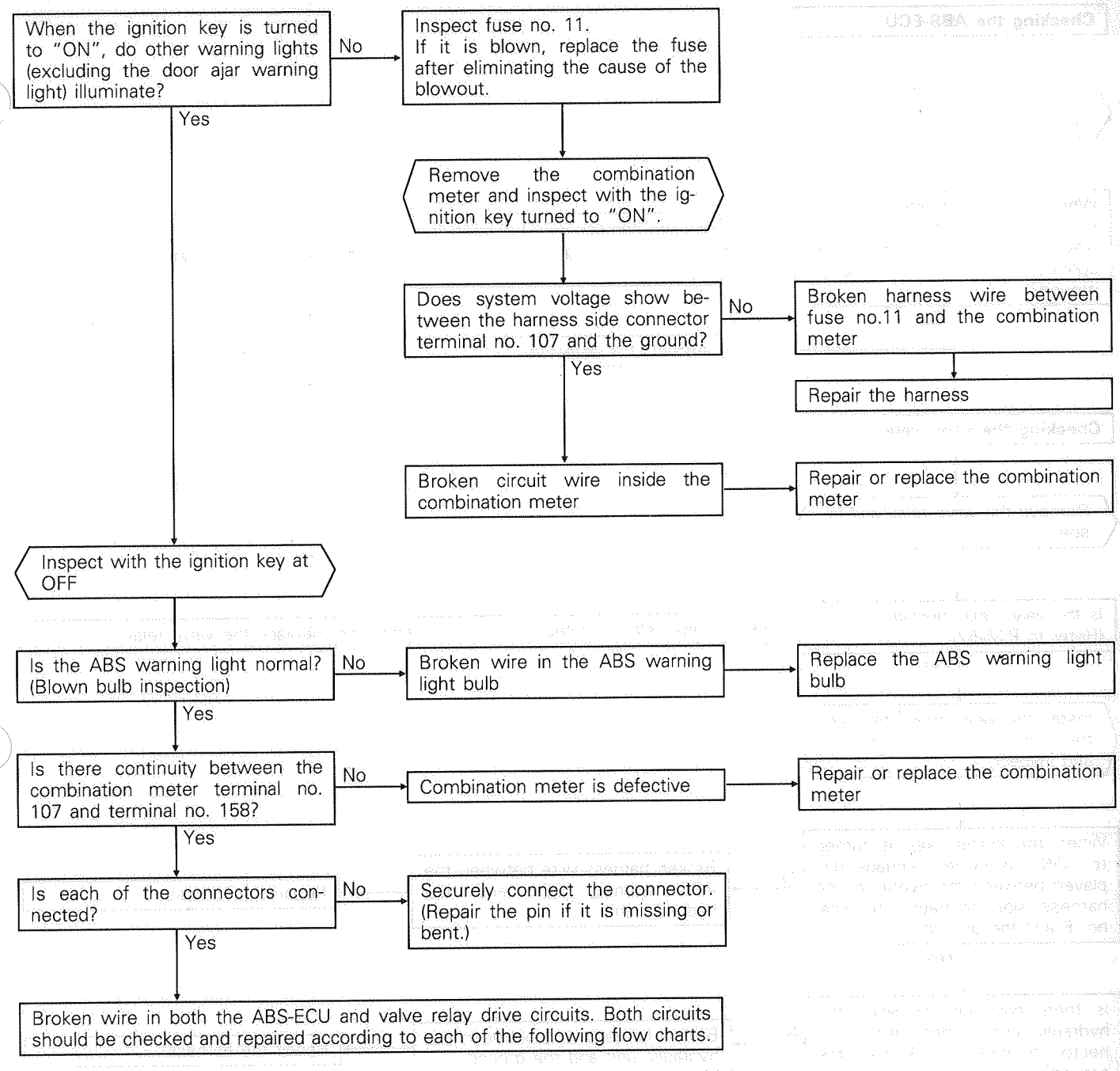
When the ignition key is turned to "ON", do other warning lights (excluding the door ajar warning light) illuminate?
No
Inspect fuse no. 11.
If it is blown, replace the fuse after eliminating the cause of the blowout.
Yes
Remove the combination meter and inspect with the ignition key turned to "ON".
Does system voltage show between the harness side connector terminal no. 107 and the ground?
No
Broken harness wire between fuse no.11 and the combination meter
Repair the harness
Yes
Broken circuit wire inside the combination meter
Repair or replace the combination meter
Inspect with the ignition key at OFF
Is the ABS warning light normal? (Blown bulb inspection)
No
Broken wire in the ABS warning light bulb
Replace the ABS warning light bulb
Yes
Is there continuity between the combination meter terminal no. 107 and terminal no. 158?
No
Combination meter is defective
Repair or replace the combination meter
Yes
Is each of the connectors connected?
No
Securely connect the connector. (Repair the pin if it is missing or bent.)
Yes
Broken wire in both the ABS-ECU and valve relay drive circuits. Both circuits should be checked and repaired according to each of the following flow charts.

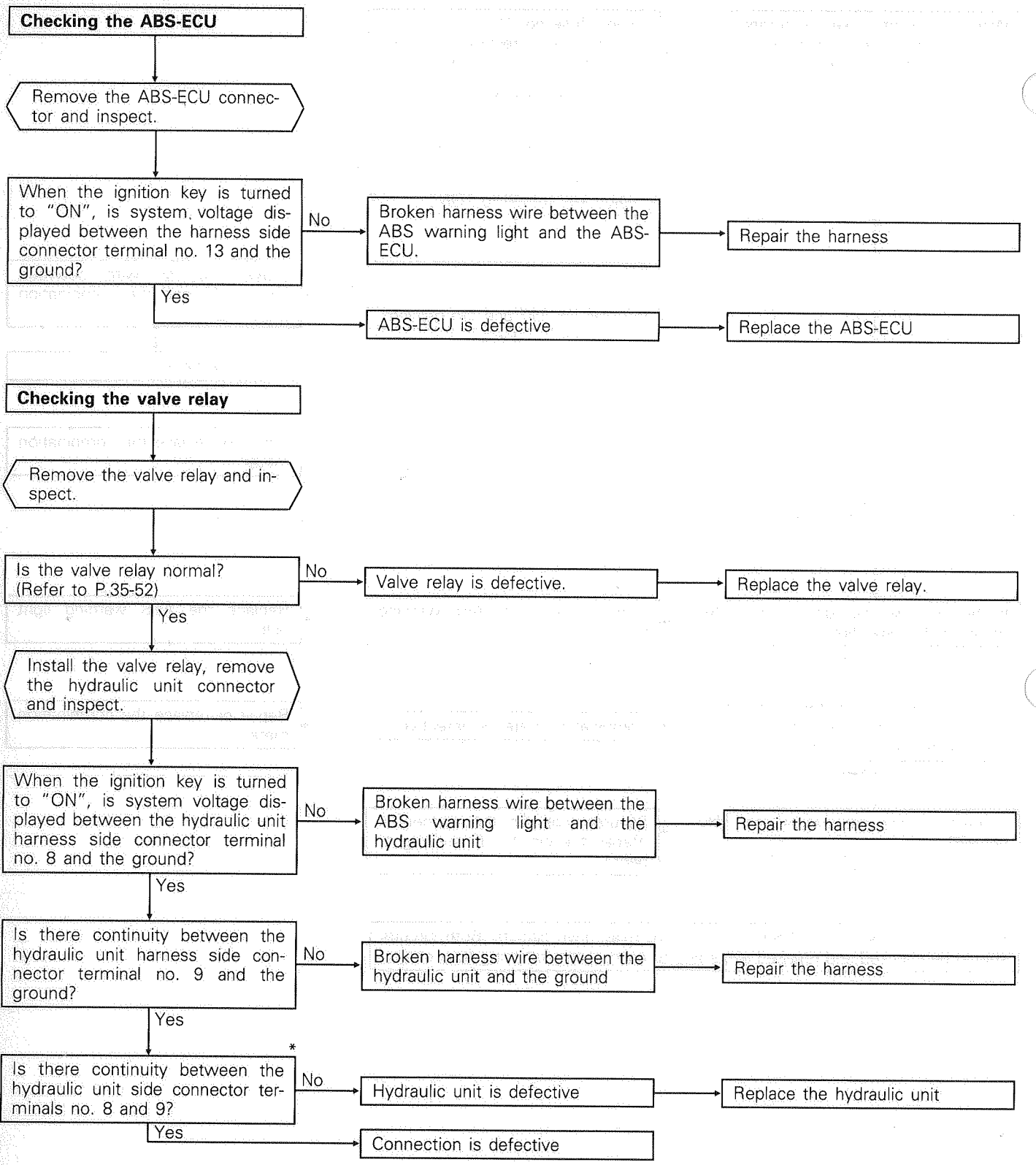

NOTE
For inspection sections marked by *, pay attention to the polarity of the diodes. (Refer to the circuit diagram on P.35-14.)

B When the ignition switch is turned to "ON", the ABS warning light remains illuminated

[Comment] This symptom occurs when the ABS-ECU is not functioning due to a broken wire, etc., in the ABS-ECU power circuit, when the fail-safe function is operating to isolate the system, or when there is a short in the warning light drive circuit.

(Hint) Check the diagnosis output, and if there is no output voltage, or the multi-use tester and the ABS-ECU cannot communicate, then there is a high possibility that power is not being supplied to the ABS-ECU.

Caution

- **If no malfunction code is output, there is a high possibility that the fail-safe function is operating. In this case, to check if there is a current problem, the memory should be temporarily erased, and a test run should be carried out.**

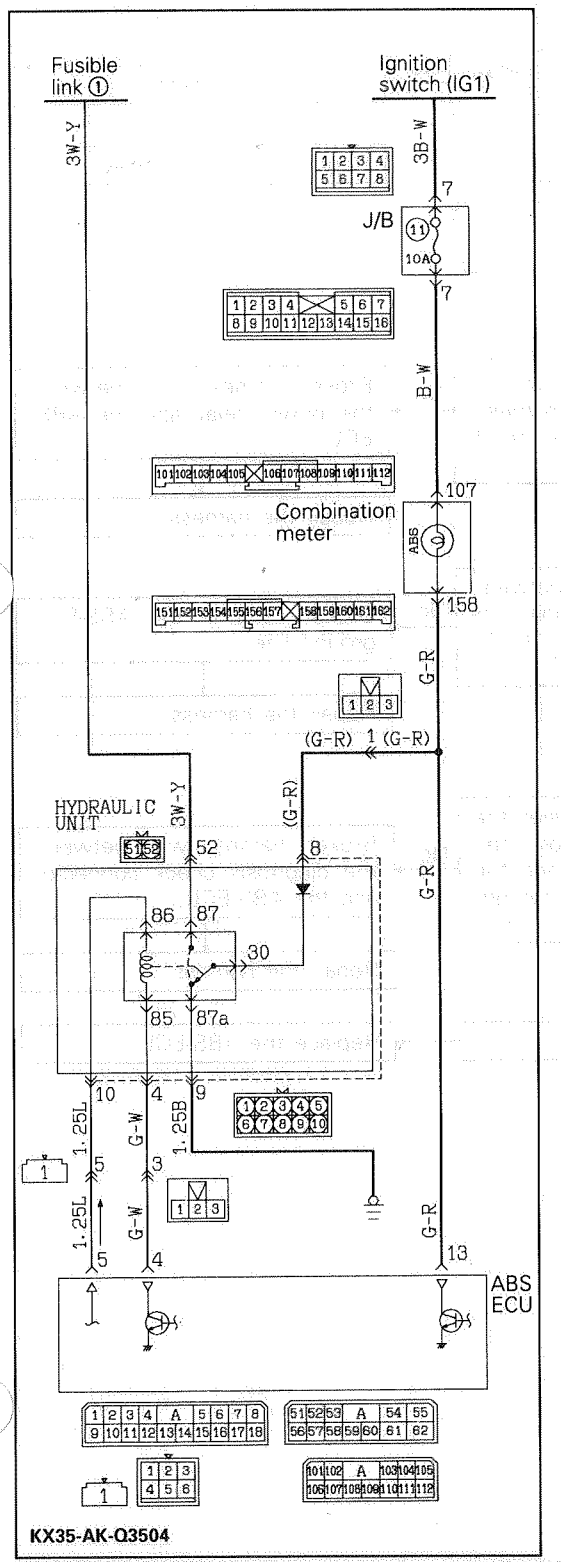

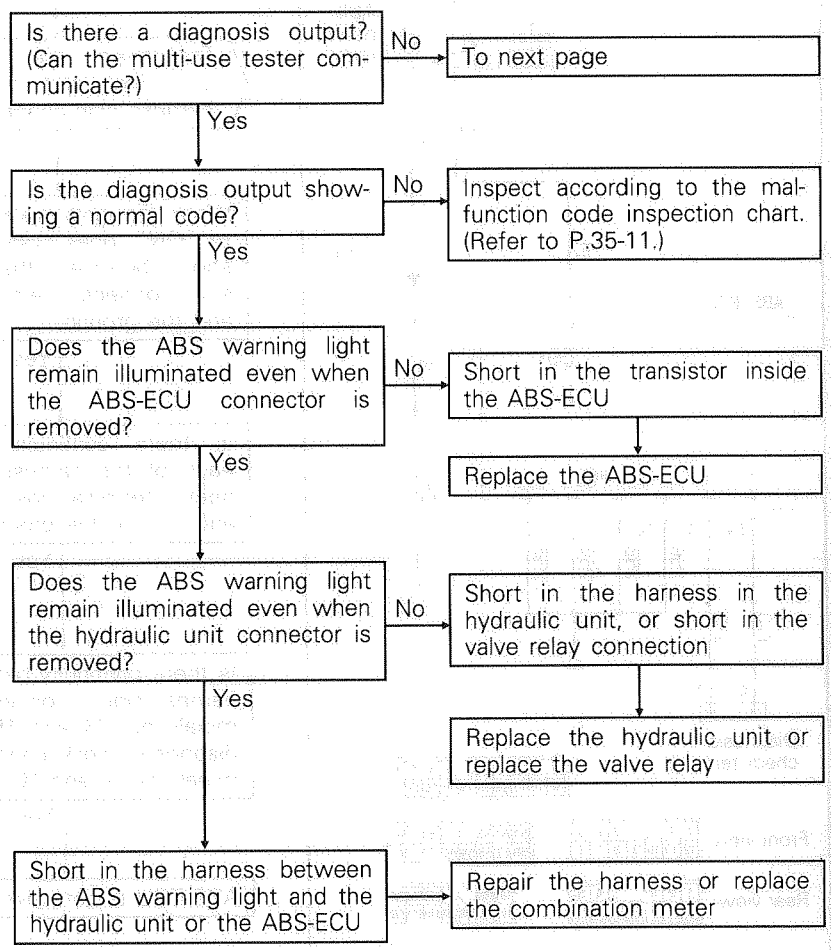

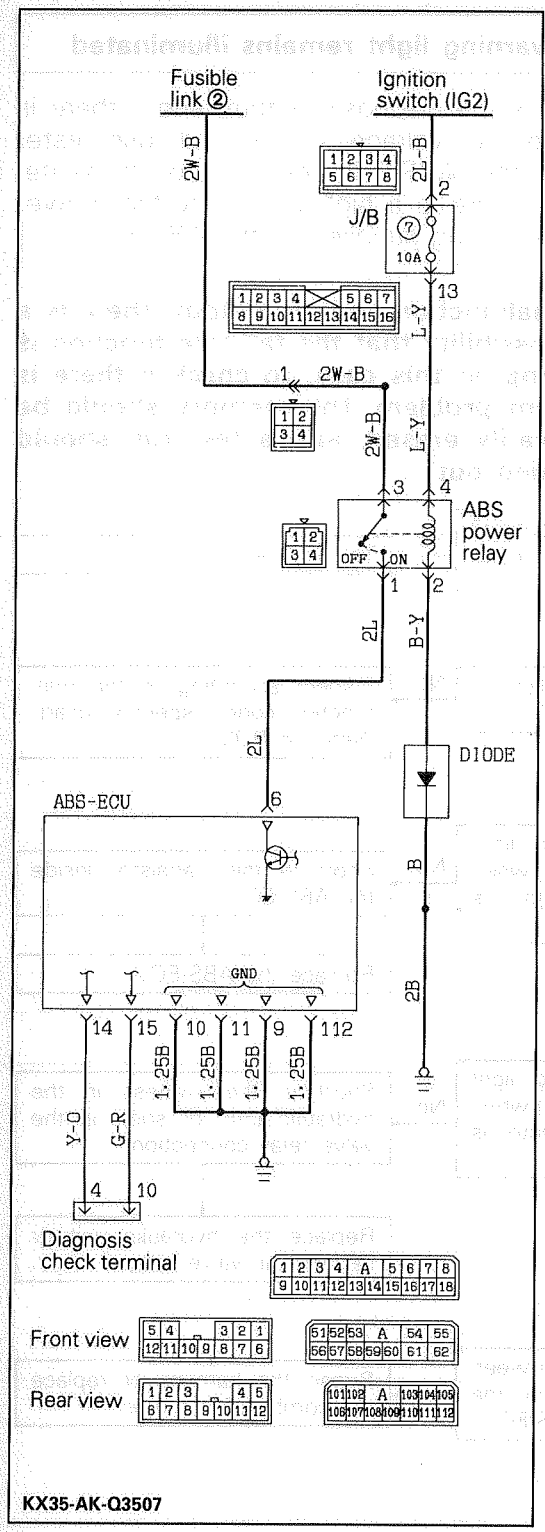

From previous page

Can other electronic control systems communicate with the multi-use tester?
- No → Malfunction in the multi-use tester. Repair or reinspect.
- Yes ↓

Is fuse no. 7 normal?
- No → Replace the fuse after eliminating the cause of the blowout.
- Yes ↓

Does the power relay operate normally? (Refer to P.35-52)
- No → Power relay is defective → Replace the power relay
- Yes ↓

Disconnect the ABS-ECU connector, and inspect the harness side connector.

When the ignition key is turned to "ON", does system voltage show between the harness-side connector terminal no. 6 and the ground?
- No → Broken harness wire between the power relay and the ABS-ECU. → Repair the harness
- Yes ↓

Is there continuity between each of the harness-side connector terminal nos. 9, 10, 11 and 12 and the ground?
- No → Broken wire in the ABS-ECU ground line → Repair the harness
- Yes ↓

Is there continuity between the harness-side connector terminals no. 14 and 15 and the diagnosis check connector terminals no. 4 and 10?
- No → Broken harness wire between the diagnosis check connector and the ABS-ECU. → Repair the harness
- Yes ↓

ABS-ECU is defective → Replace the ABS-ECU

C When ignition key is turned to "START", ABS warning light switches off

[Comment] The ABS-ECU uses the power to the IG2 which is cut when the ignition switch is turned to "START". The ABS warning light uses IG1 power which is not cut even when the ignition switch is turned to "START". Accordingly, because the power to the ABS-ECU is stopped in "START" position, the valve relay turns OFF. At this time, if the warning light does not illuminate, the cause is a problem in the light illumination circuit in the valve relay.

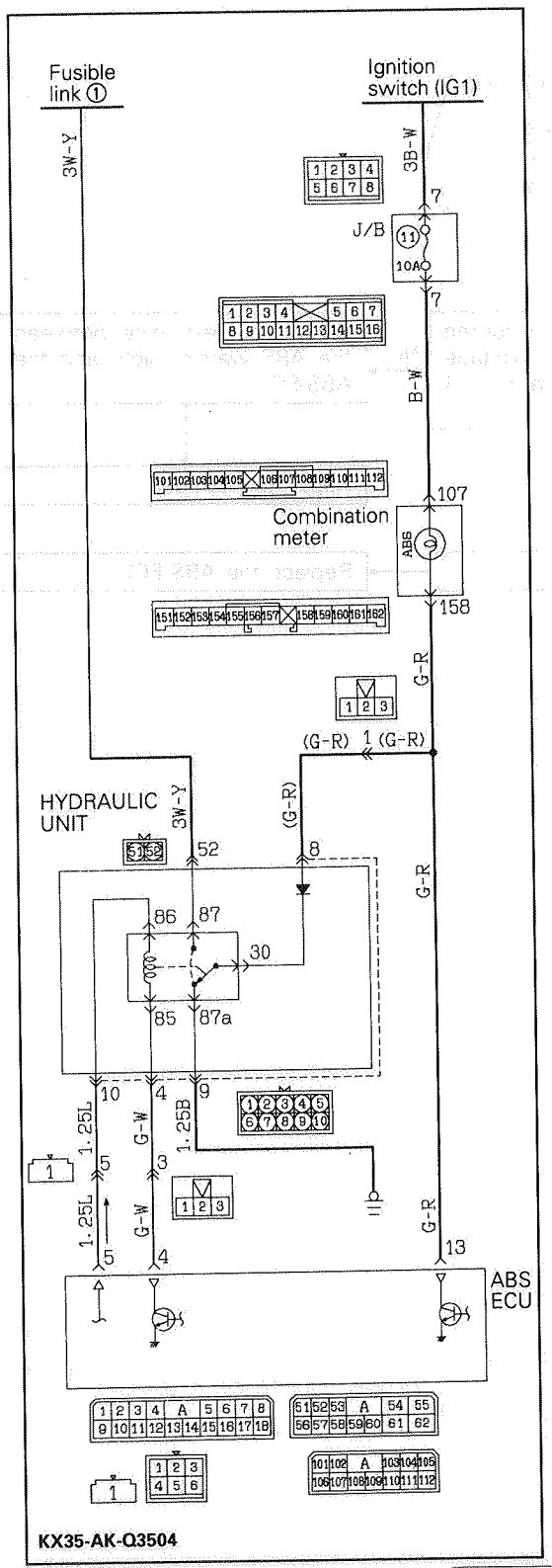

(1) Remove the fuse no. 7 of the junction block.
(2) Remove the hydraulic unit connector and inspect.

When the ignition key is turned to "ON", does system voltage show between the harness side connector terminal no. 8 and the ground?
- No → Broken harness wire between the hydraulic unit and the ABS warning light
- Yes ↓

Is there continuity between the harness side connector terminal no. 9 and the ground?
- No → Broken wire between the hydraulic unit and the ground
- Yes ↓

* Is there continuity between the hydraulic unit side connector terminal no. 8 and terminal no. 9?
- No → Valve relay is defective, or broken harness wire inside the hydraulic unit
- Yes ↓

When the valve relay is removed, is there continuity between terminal no. 87a and terminal no. 30?
- No → Valve relay is defective → Replace the valve relay
- Yes ↓

Hydraulic unit harness is defective ↓

Replace the harness

NOTE
For inspection sections marked by *, pay attention to the polarity of the diodes. (Refer to the circuit diagram)

TSB Revision

D	**The ABS warning light flashes twice after the ignition key is turned to "ON". The light illuminates when the ignition key is turned to "START", and when the key is returned to "ON", it flashes once.**

[Comment] The ABS-ECU causes the ABS warning light to illuminate during the initial check (approx. 1 second). During the initial check, the valve relay changes from OFF to ON→OFF→ON, and if there is a broken harness wire between the ABS-ECU and the ABS warning light, the light will illuminate only when the valve relay is OFF because of a valve relay test, etc.

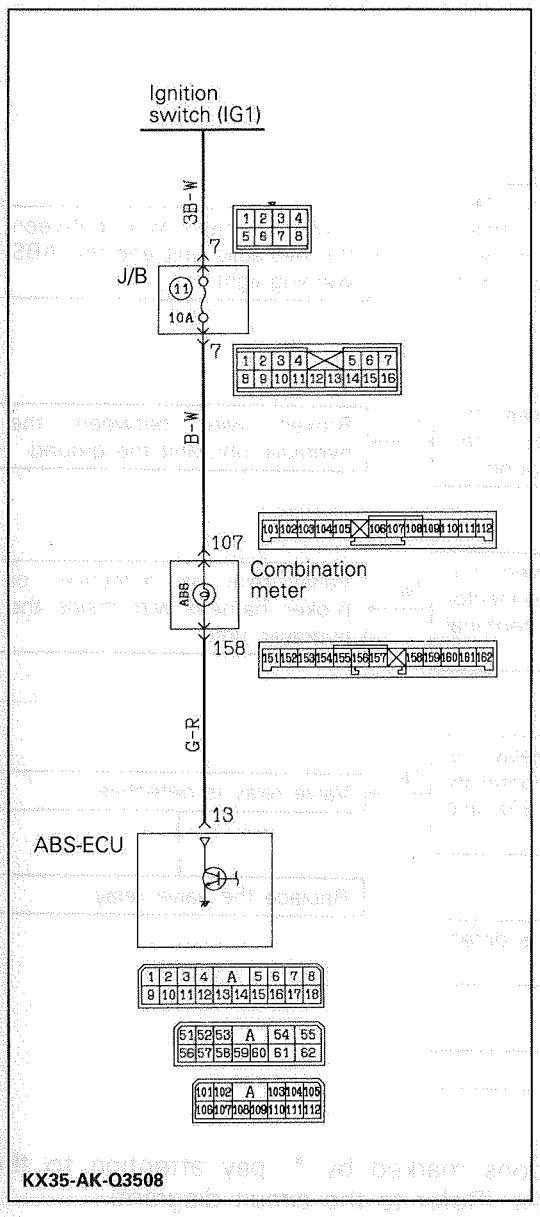

(1) Disconnect the hydraulic unit connectors.
(2) Remove the ABS-ECU connector and inspect the connector at the harness side.

When the ignition key is turned to "ON", does system voltage show between terminal no. 13 and the ground?

No → Broken harness wire between the ABS warning light and the ABS-ECU. → Repair the harness

Yes → ABS-ECU is defective → Replace the ABS-ECU

E-1	When diagnosis code nos. 11, 12, 13, or 14 are displayed

[Comment] These codes are displayed when there is a broken (+) wire or (–) wire in one of the vehicle speed sensors detected by the ABS-ECU hardware circuit.

(Hint) Apart from a broken wire in a vehicle speed sensor, the cause could also be an intermittent break in a sensor harness or a defective harness connection, so check these also.

NOTE

1. When there is a defective contact, inspect the sensor cable by lightly flexing and stretching it.
2. If there is no current problem, a normal value will result even if a problem is detected, so when the malfunction in the sensor circuit indicated cannot be discovered, momentarily turn the ignition switch to OFF, and carry out another driving test. At this time, replace the ABS-ECU only if the same problem code is output. After this, if the code does not reappear, there is a problem with the ABS-ECU interface. (For a problem that is difficult to reproduce, there is a possibility that the code will recur even when the ABS-ECU is replaced.)

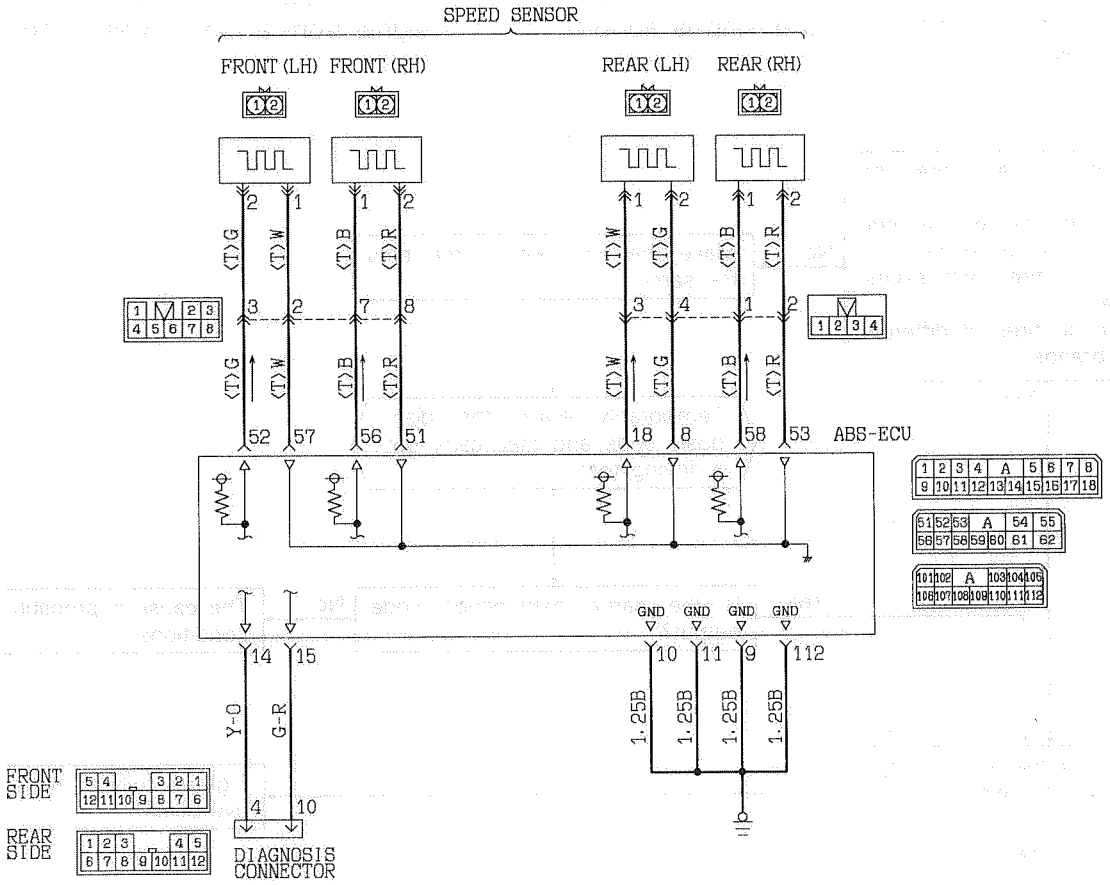

KX35-AK-Q3509

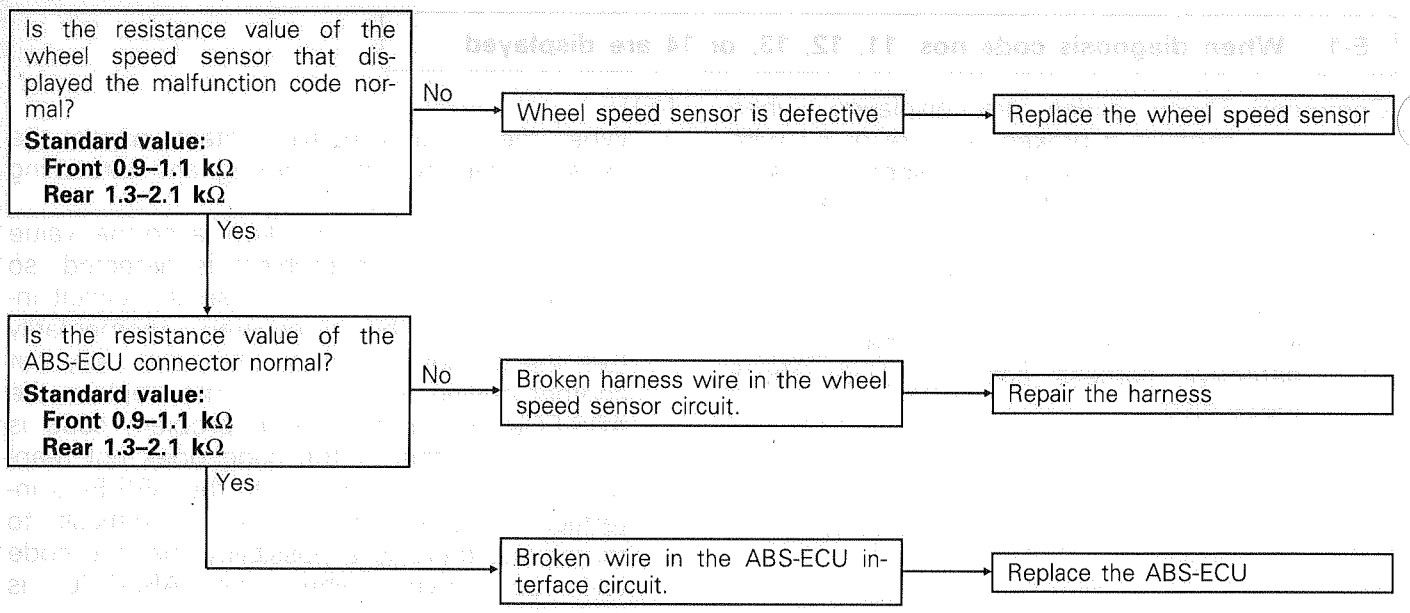

E-2 When diagnosis code no. 15 is displayed

[Comment] This malfunction code is output when any one of the wheel speed sensor output signals during driving is abnormal.

(Hint) The cause of the abnormal wheel speed sensor output could be noise in the sensor signal from a loose wheel speed sensor.

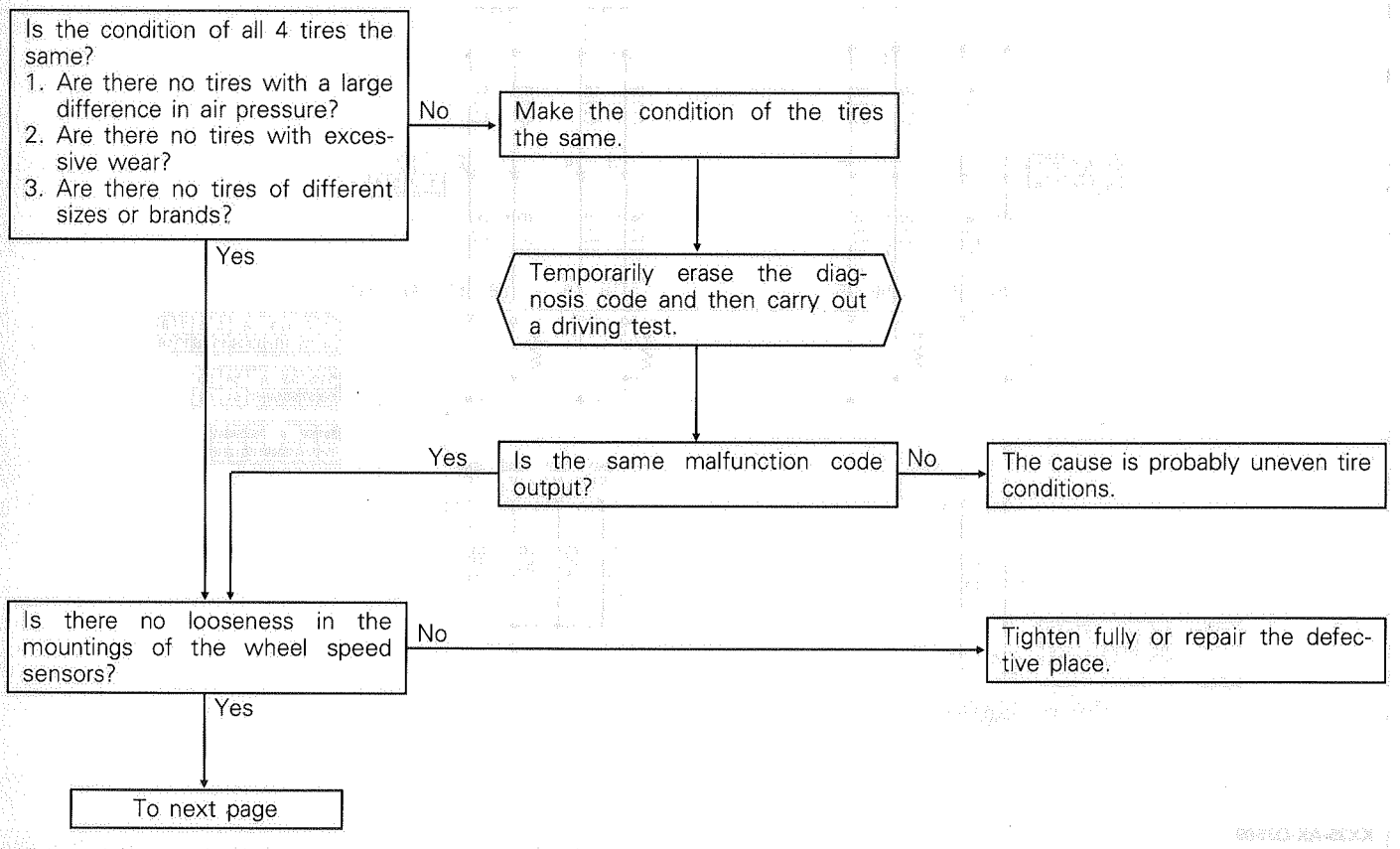

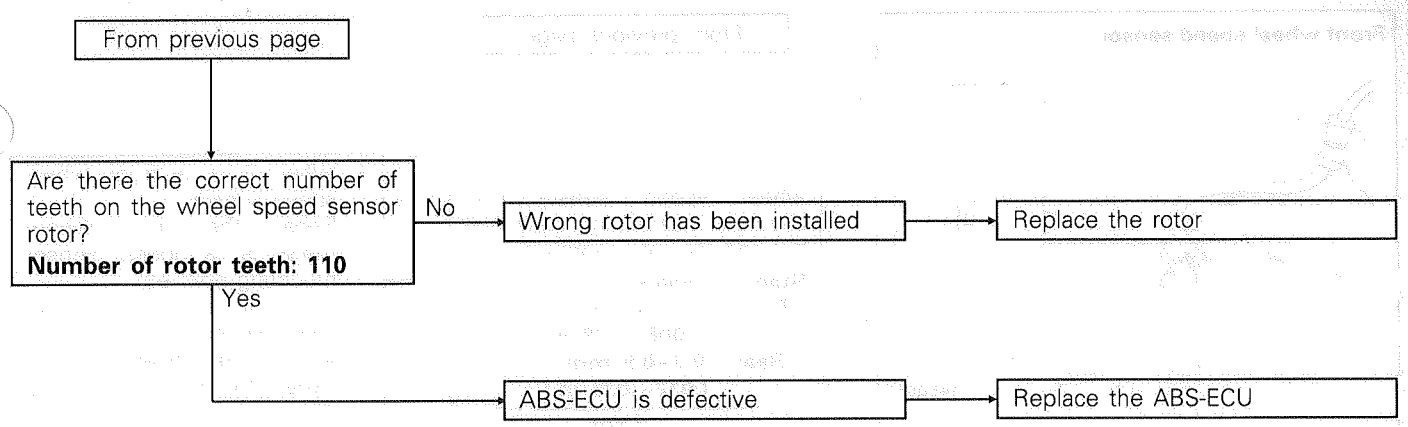

E-3 When diagnosis code no. 21, 22, 23 or 24 is displayed

[Comment] These malfunction codes are displayed when a broken wire cannot be verified, and when the vehicle speed reaches 8 km/h (5 mph) or more, no pulses are input.

(Hint) The cause is likely to be either a short between the sensor harnesses, a short between the sensor (+) wire and the body, or an excessive sensor gap.

NOTE

(1) When there is a defective contact, inspect the sensor cable by lightly flexing and stretching it.

(2) If there is no current problem, a normal value will result even if a problem is detected, so when the malfunction in the sensor circuit indicated cannot be discovered, momentarily erase the diagnosis code and turn the ignition switch to OFF, and carry out another driving test. At this time, replace the ABS-ECU only if the same malfunction code is output. After this, if the code does not reappear, there is a problem with the ABS-ECU interface. (For a problem that is difficult to reproduce, there is a possibility that the code will recur even when the ABS-ECU is replaced.)

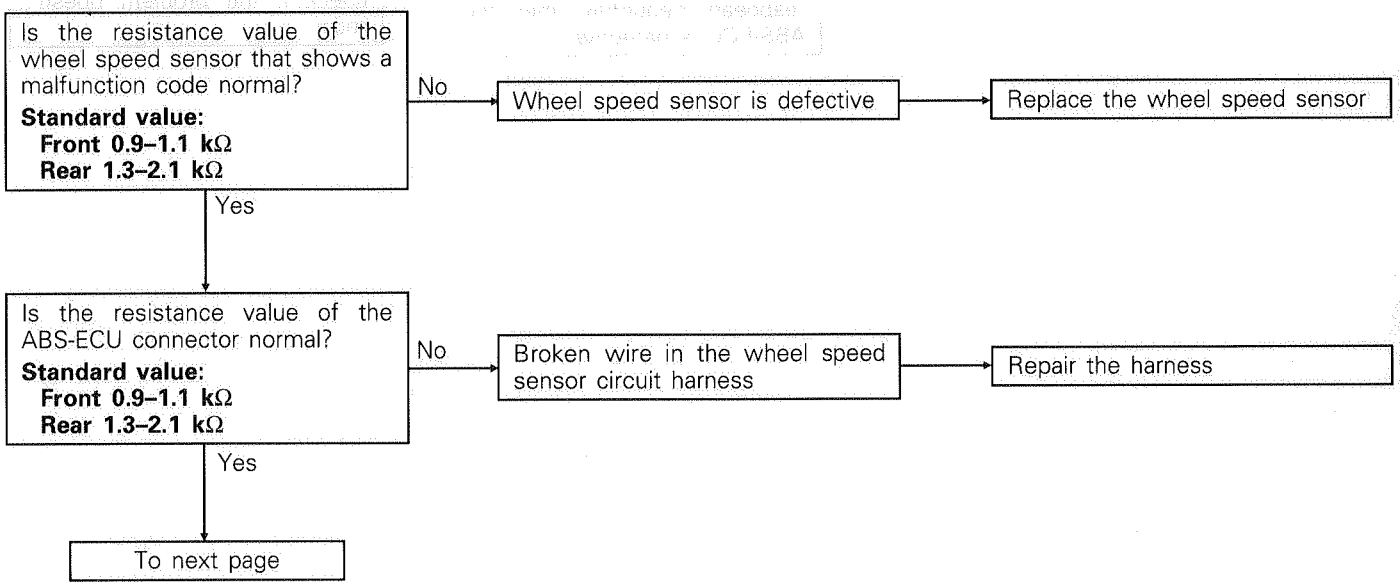

Front wheel speed sensor

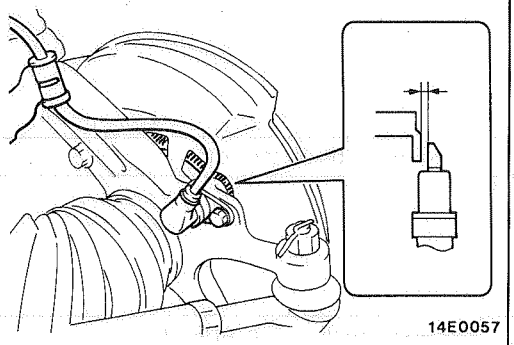

Rear wheel speed sensor

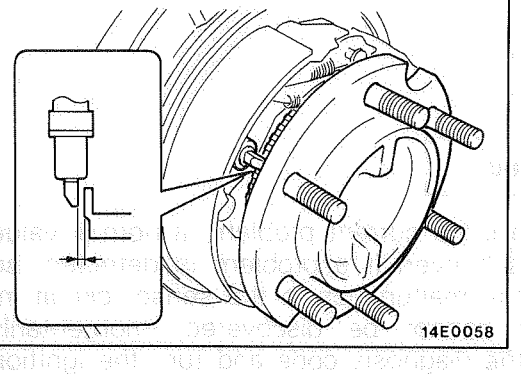

From previous page

Is the clearance between the wheel speed sensor that shows a malfunction code output and the rotor normal?
Standard value:
Front: 0.2–1.0 mm (.008–.039 in.)
Rear: 0.3–0.9 mm (.012–.035 in.)

No →
1. When it is a front wheel speed sensor
   Repair the place where there is a loose sensor mounting bolt, etc.
2. When it is a rear wheel speed sensor
   Adjust the clearance between the sensor and the rotor.

Yes ↓

Is the rotor of the wheel speed sensor that shows a malfunction code output normal, with no parts deformed or chipped?

No → Replace the rotor with deformed or chipped teeth.

Yes ↓

Inspect the output of each wheel speed sensor, including wave patterns from an oscilloscope. (Refer to P.35-48.)
Is the output voltage from each wheel speed sensor at the standard value or above, and are all wave patterns normal also?

No → If voltage is below the standard value, or if there is an abnormal wave pattern, re-inspect, and replace any sensor or rotor that is defective.

Yes ↓

If all of the above checks are normal and this problem code reappears frequently, then the ABS-ECU is defective.

→ Replace the ABS-ECU and check if the problem doesn't recur.

E-4 When diagnosis code no. 16 is displayed

[Comment] This indicates that the ABS-ECU power voltage or the solenoid valve power voltage is lower than the standard value.
If the voltage returns to standard voltage or above, this malfunction code will not be output.

Caution
If the system voltage drops during inspection, this code will be output as a current problem, and correct diagnosis of the problem cannot be made. Before carrying out the following inspection, check the battery, and charge it if necessary.

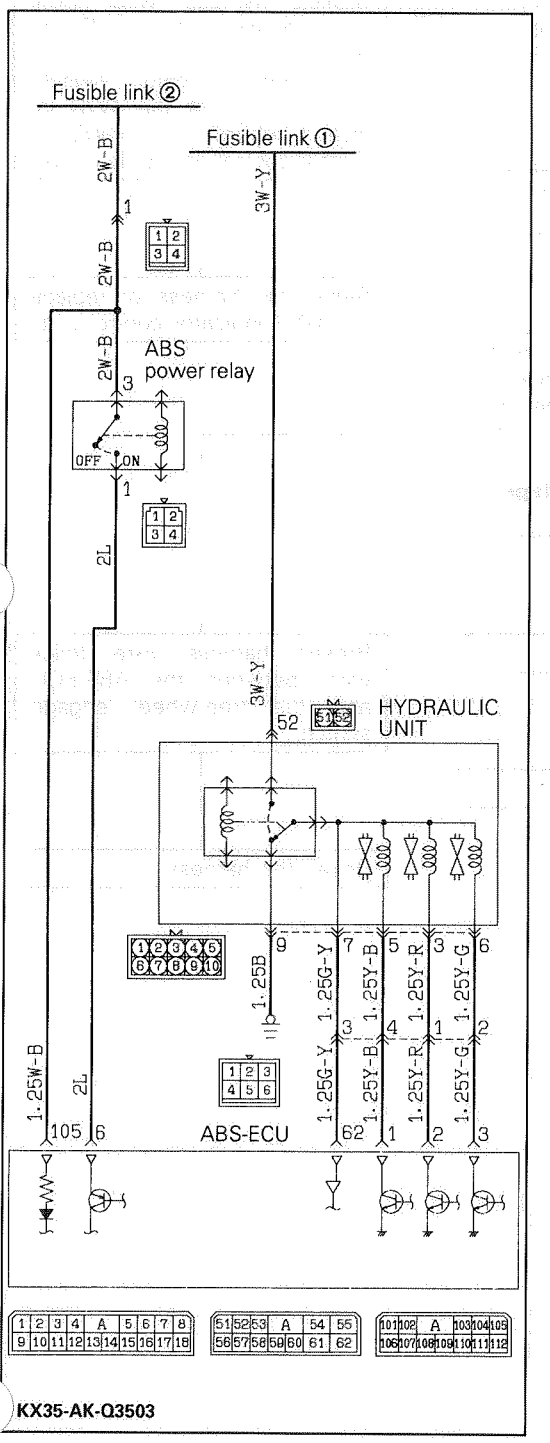

When the engine is running, does a voltage of 10V or more show between the ABS-ECU power terminal no. 6 and the ground?
- No → Check that there are no defective contacts in the fusible link or in each connector.
- Yes ↓

When the engine is running, does a voltage of 10V or more show between the ABS-ECU solenoid valve voltage monitor terminal no. 62 and the ground?
- No → Check that there are no defective contacts in the fusible link or in each connector.
- Yes ↓

Is the ABS-ECU connection normal? (When the connector is disconnected, check if there are no bends in the pins, or that contact pressure is sufficient.)
- No → Repair the ABS-ECU connector
- Yes ↓

ABS-ECU is defective → Replace the ABS-ECU

E-5 When diagnosis code no. 25 is displayed

[Comment] This malfunction code is output by the ABS-ECU when there is a broken harness wire or defective 4WD indicator circuit in the free-wheel engage switch (thick wire in center of circuit diagram).

(Hint) When this malfunction code is output, and also none of the 4WD indicator lights (excluding the rear differential light) are illuminated, the cause is likely to be the power circuit in the 4WD indicator control unit.

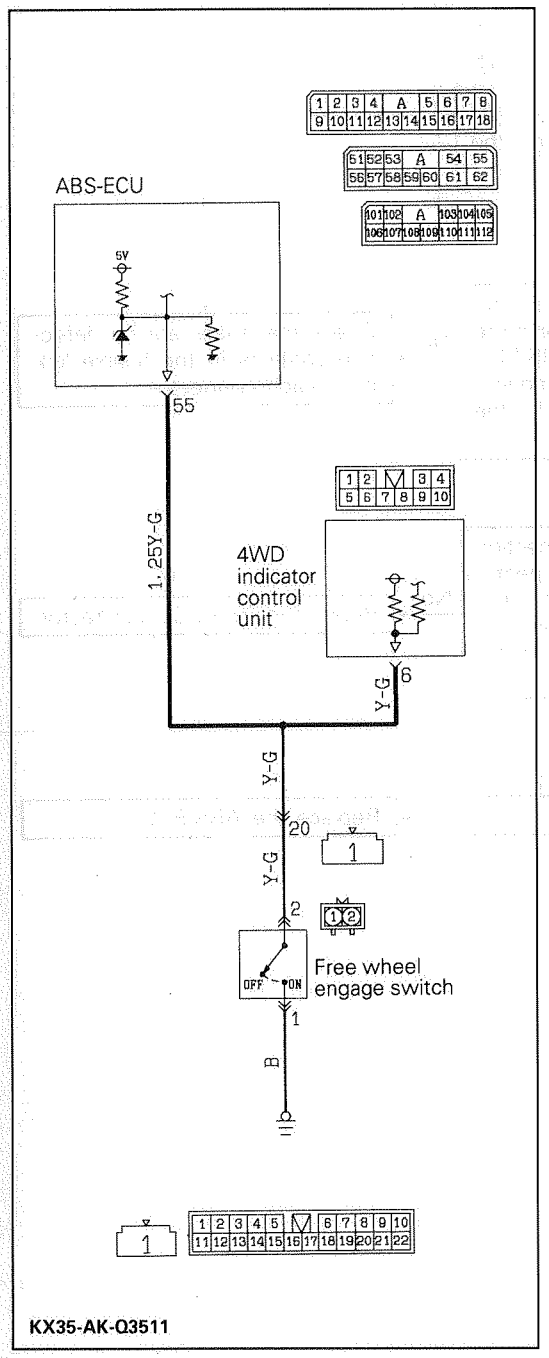

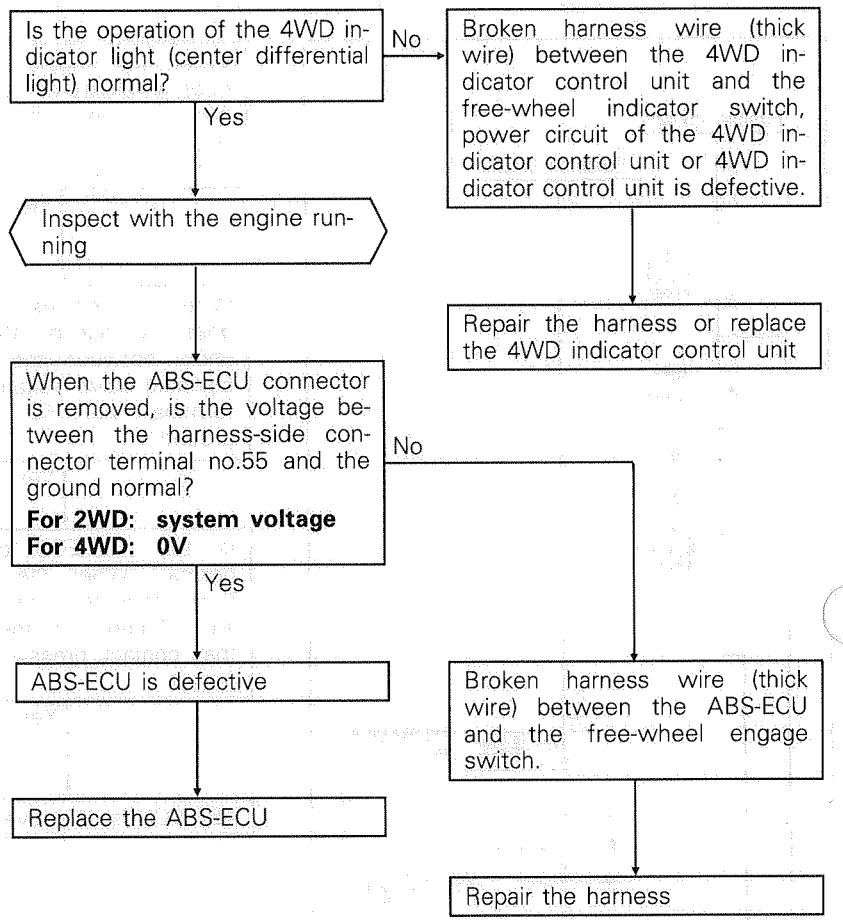

E-6	When diagnosis code no. 26 is displayed

[Comment] This malfunction code is output by the ABS-ECU in the following cases:
- Broken harness wire (thick wire) in the center differential lock detection switch system
- At a vehicle speed of 15 km (9 mph) or higher, the free-wheel engage switch is OFF and the center differential lock switch is ON for a continuous period of 5 seconds or more (Combination switch signal abnormality)
- When the 4WD indicator circuit is defective

(Hint) 1. A combination switch signal abnormality occurs at the following times:
- Broken harness wire (thick wire) in the free-wheel engage switch system or defective switch (stays OFF)
- Short in harness wire (thick wire) in the center differential lock switch system or defective switch (stays ON)

The above malfunctions are also affected by the 4WD indicator, so it might be the case that the malfunction is caused by a trouble symptom in the 4WD indicator.

2. When this malfunction code is output, and also none of the 4WD indicator lights (excluding the rear differential light) are illuminated, the cause is likely to be the power circuit in the 4WD indicator control unit.

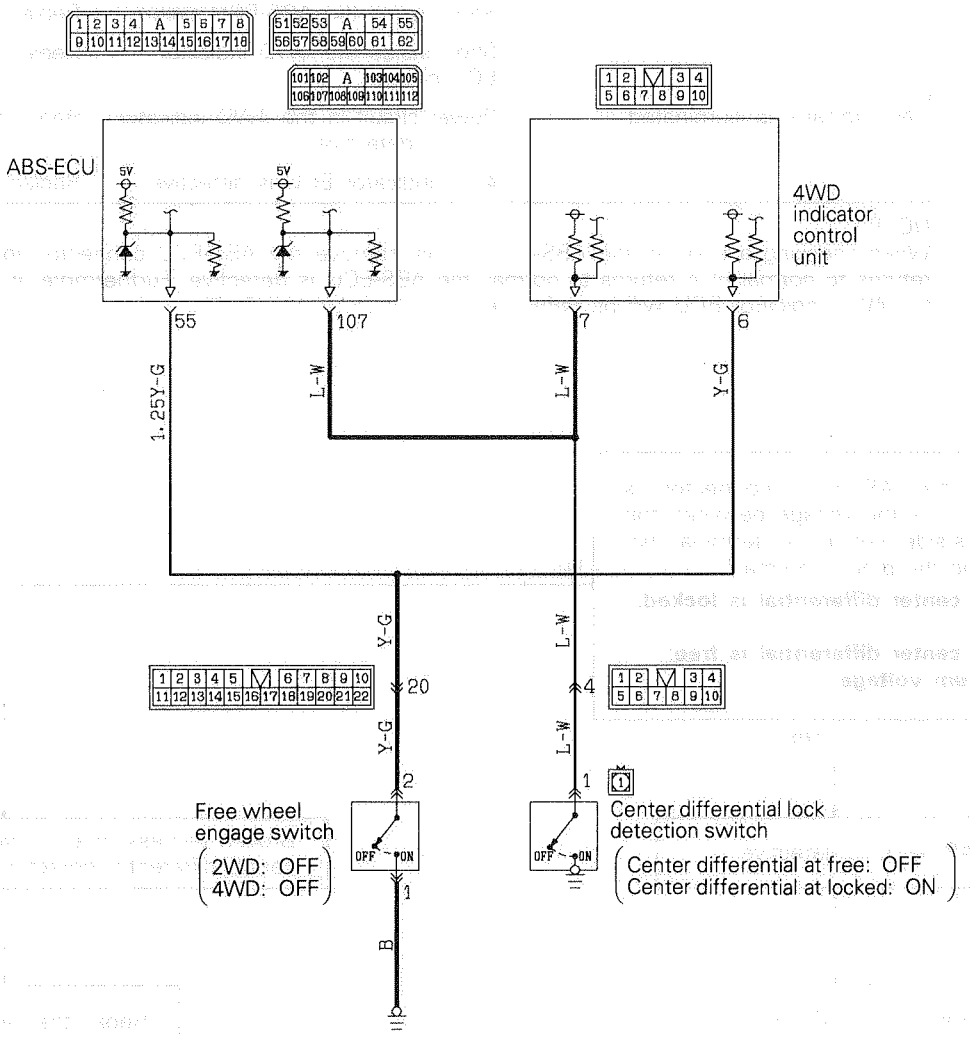

KX35-AK-Q3512

Does the 4WD indicator operate normally?

No

Yes

Trouble symptom	Main cause	Remedy
Even when the transfer shift lever is in the "4H" position, the 4WD front wheel indicator light does not illuminate.	Broken harness wire between the 4WD indicator ECU and the free-wheel engage switch, or broken ground wire from the free-wheel engage switch.	Repair the harness
	Free wheel engage switch is defective	Replace the switch
Even when the transfer shift lever is in the "4H" position, the 4WD center differential light does not illuminate.	Broken harness wire between the 4WD indicator ECU and the center differential lock switch	Repair the harness
	Broken wire in the 4WD indicator ECU circuit	Replace the ECU
4WD indicator center differential light illuminates regardless of the position of the transfer shift lever	Short in the harness wire in the center differential lock detection switch circuit	Repair the harness
	Center differential lock detection switch is defective	Replace the switch
	Short inside the ABS-ECU circuit	Replace the ABS-ECU
	Short inside the 4WD indicator ECU circuit	Replace the 4WD indicator ECU
No indicator is illuminated	Power circuit in the 4WD indicator ECU is defective	Repair the harness
	4WD indicator ECU is defective	Replace the 4WD indicator ECU

NOTE
When checking a short in the ABS-ECU circuit, remove the ABS-ECU connector and check if the 4WD indicator returns to normal. If it returns to normal, the ABS-ECU is defective. Furthermore, if the ABS-ECU is normal, then the 4WD indicator ECU will be defective.

When the ABS-ECU connector is removed, is the voltage between the harness-side connector terminal no. 107 and the ground normal?
When center differential is locked: 0V
When center differential is free: system voltage

No

Yes

ABS-ECU is defective

Replace the ABS-ECU

Broken harness wire between the ABS-ECU and the center differential detection lock switch

Repair the harness

TSB Revision

E-7 When diagnosis code no. 27 is displayed <Vehicles equipped with rear differential lock>

[Comment] This malfunction code is output by the ABS-ECU when there is a broken harness wire or a defective rear differential lock circuit (thick wire in circuit diagram) in the rear differential lock detection switch system.

[Hint] When this malfunction code is output, and also none of the 4WD indicator lights (rear differential light) are illuminated, the cause is likely to be the power circuit in the 4WD indicator control unit.

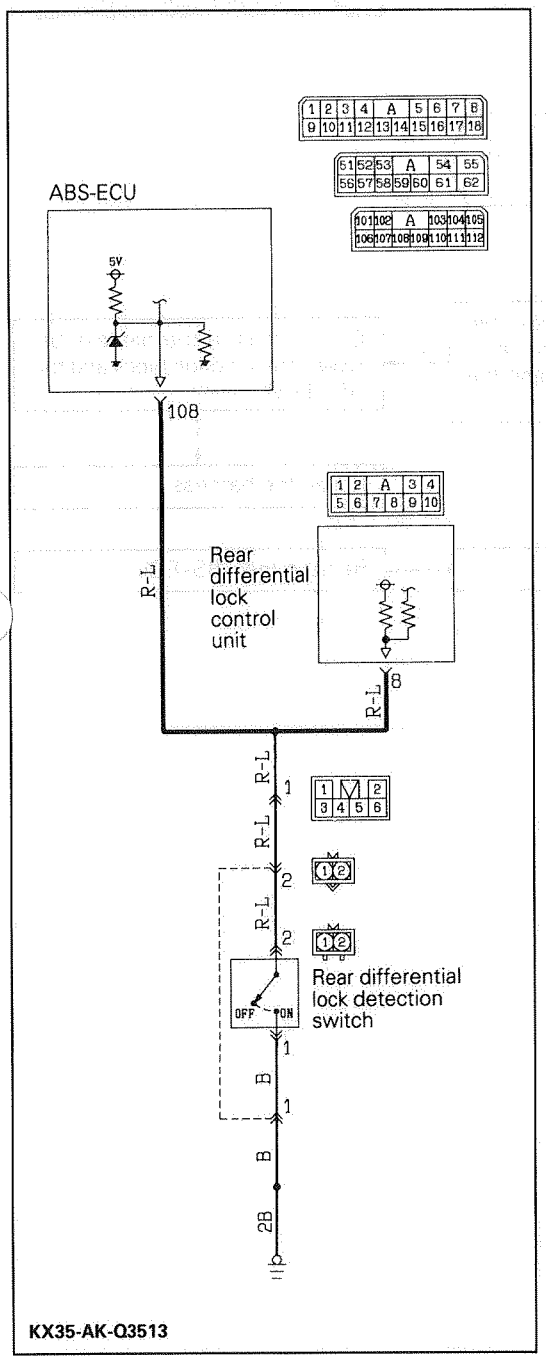

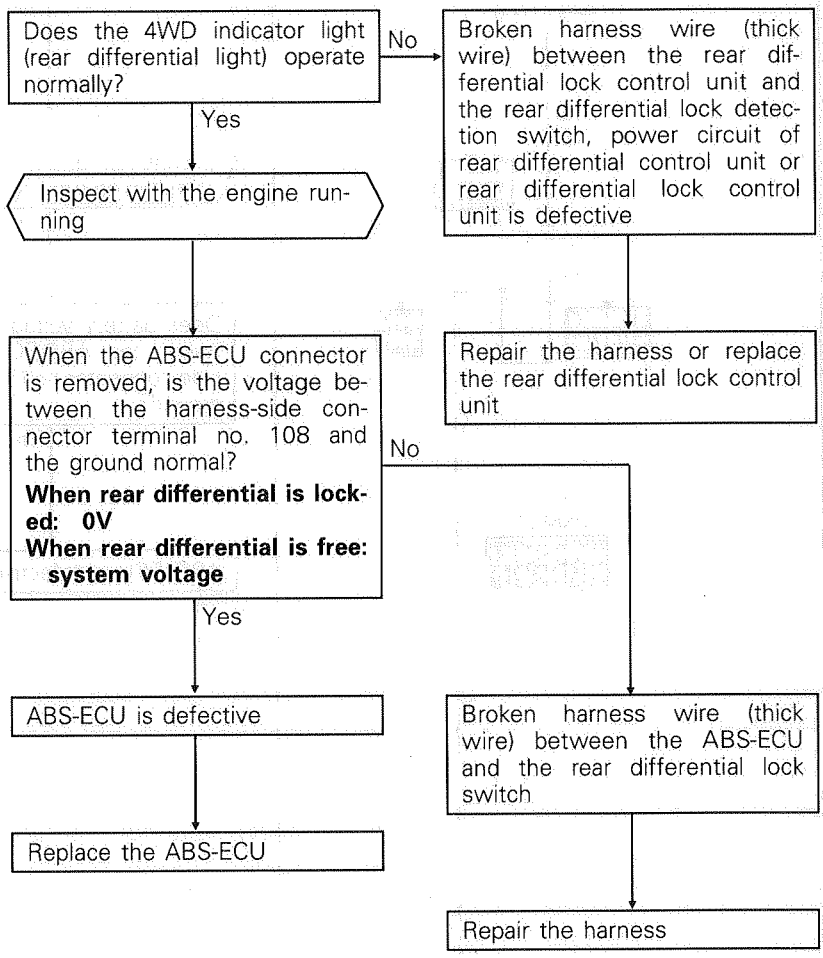

E-7 When diagnosis no. 27 is displayed <Vehicles without rear differential lock>

[Comment] For vehicles without rear differential lock, battery voltage is applied to the ABS-ECU terminal no. (108). This malfunction code is output when this line is interrupted.

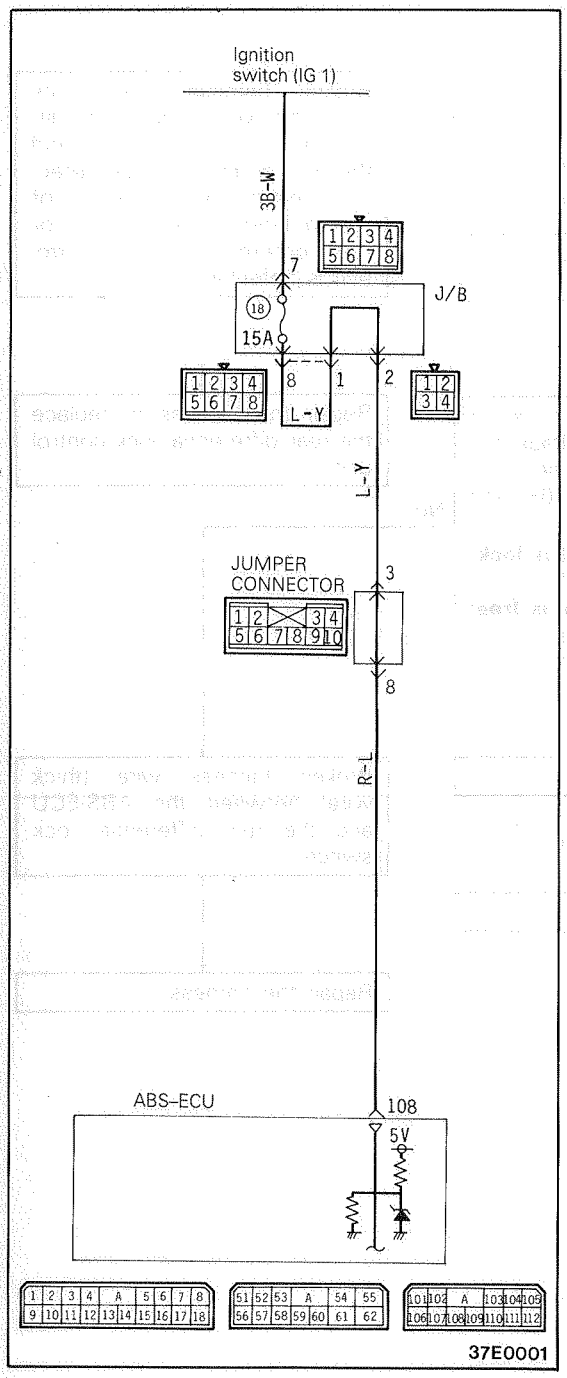

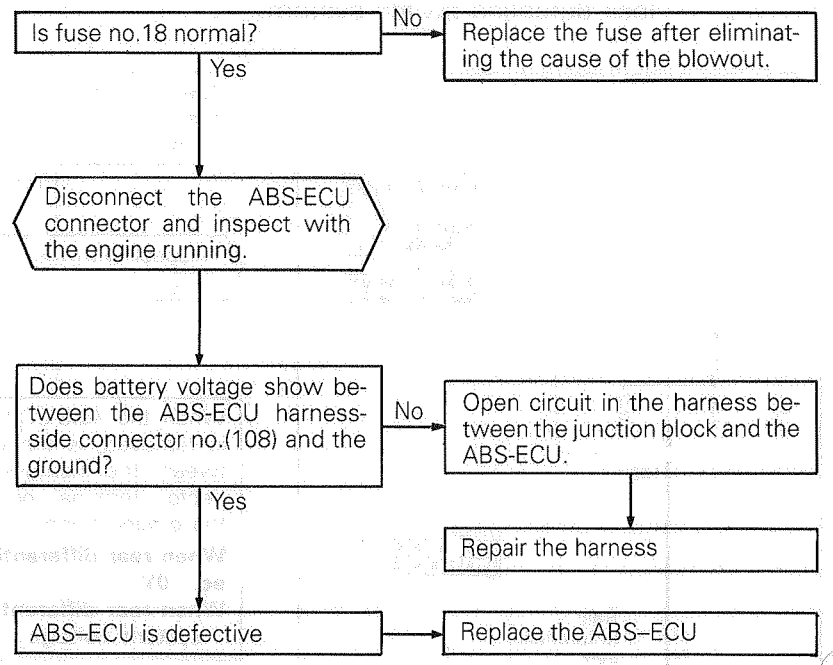

E-8 When diagnosis code no. 31 is displayed

[Comment] This code is displayed when there is an abnormality in the G sensor power voltage (including a short in the G sensor power harness).

(Hint) If there is a short in the G sensor power harness, code no. 32 will be output at the same time as this code.

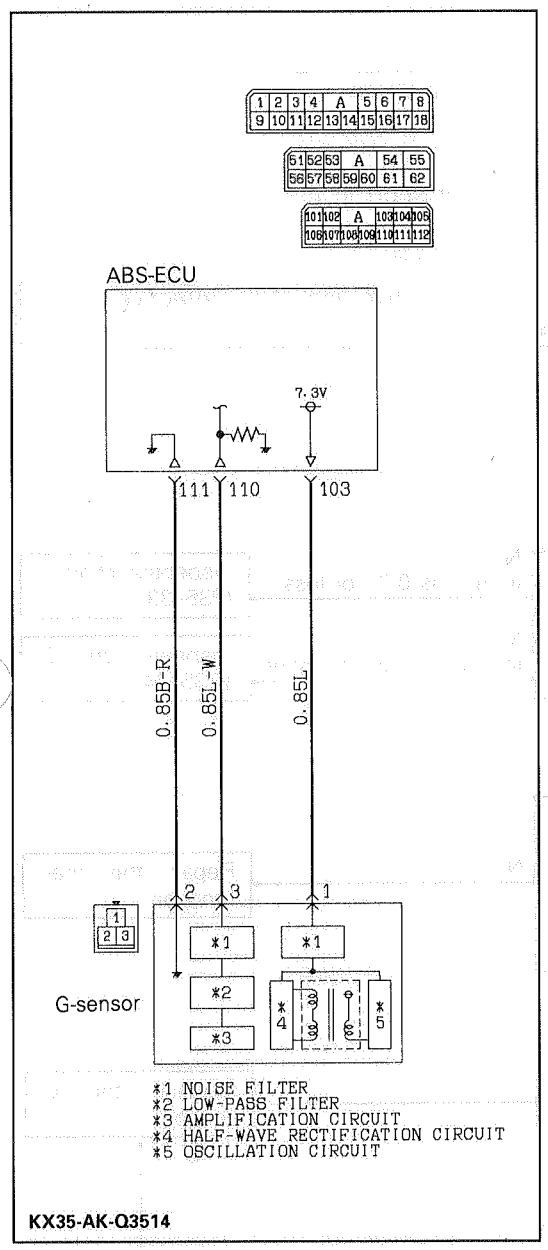

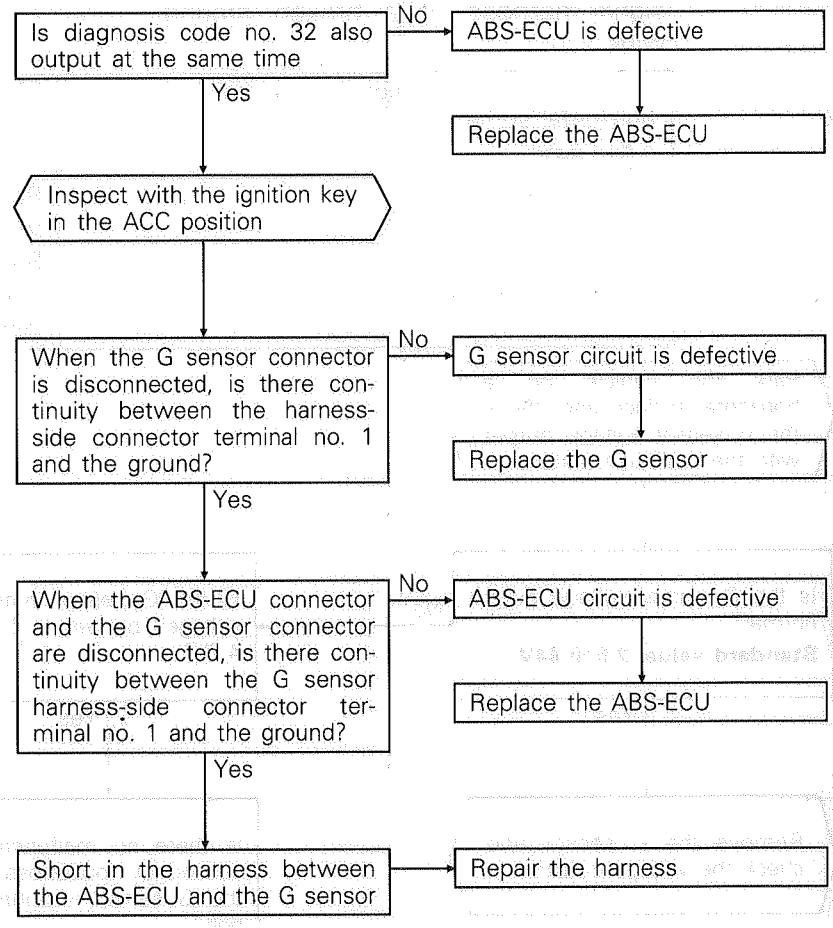

E-9 When diagnosis code no. 32 is displayed

[Comment] This malfunction code is output when there is an abnormality in the G sensor voltage output. This code is also output when there is a broken wire or short in the G sensor power or signal harness or a broken ground wire.

(Hint) Malfunctions can be distinguished by the G sensor output voltage read by the multi-use tester service data.

G sensor output voltage (when vehicle is on a horizontal surface)	Main problem location
2.5±0.44V	Normal
0.2V or less	Broken wire or short in the power harness or signal harness
4.8V or more	Broken ground wire
Other than the above	G sensor is defective (including defective installation)

Park the vehicle on a horizontal surface and check the G sensor voltage output with the multi-use tester.

Is the G sensor voltage output normal?
Standard value: 2.5±0.44V

No → Is the G sensor output voltage between 0.3–4.7V?

No (output is 0.2V or less) → Inspection chart 1 (P35–33)

No (output is 4.8V or more) → Inspection chart 2 (P.35–34)

Yes → Remove the G sensor and check the voltage output.

Yes → Is there no malfunction caused by looseness in the G sensor mounting bolt?

No → Repair the malfunction

Yes → G sensor is defective → Replace the G sensor

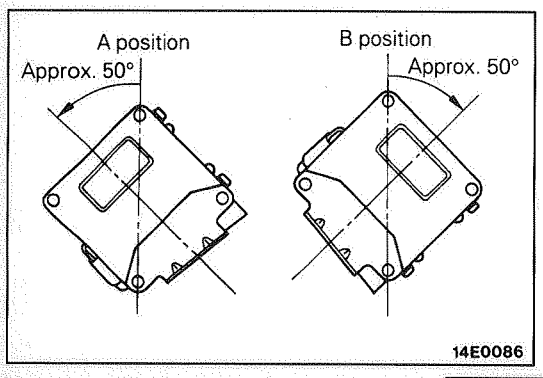

When the G sensor is tilted as shown in the illustration, is the output voltage the following?
A position: 0.3–0.7V
B position: 4.3–4.7V

No → G sensor is defective

Yes → ABS-ECU is defective → Replace the ABS-ECU

TSB Revision

Inspection Chart 1

Inspect with the engine running

Is the voltage of 7.0–7.5V at the ABS-ECU connector terminal no. 103?

No → When the ABS-ECU connector and the G sensor connector are disconnected, is there continuity between the G sensor harness-side connector terminal no. 103 and the ground?

No → ABS-ECU is defective → Replace the ABS-ECU

Yes → Short in the harness between the ABS-ECU and the G sensor → Repair the harness

Yes

When the G sensor connector is disconnected, is there voltage of 7.0–7.5V between the harness-side connector terminal no. 1 and the ground?

No → Broken harness wire between the ABS-ECU and the G sensor → Repair the harness

Yes

When the G sensor connector is connected, is the voltage between the connector terminal no. 3 and the ground (G sensor output voltage) normal?

Standard value: 2.5±0.44V (When vehicle is on a horizontal surface)

No → Inspect with the ignition key in the "ACC" position

When the G sensor connector is disconnected, is there resistance of 500 Ω or more between the harness-side connector terminal no. 3 and the ground?

Yes → G sensor is defective → Replace the G sensor

No (0 Ω)

When the ABS-ECU connector and the G sensor connector are disconnected, is there continuity between the G sensor harness-side connector terminal no. 3 and the ground?

No → ABS-ECU is defective → Replace the ABS-ECU

Yes → Short in the harness between the ABS-ECU and the G sensor → Repair the harness

Yes

To next page

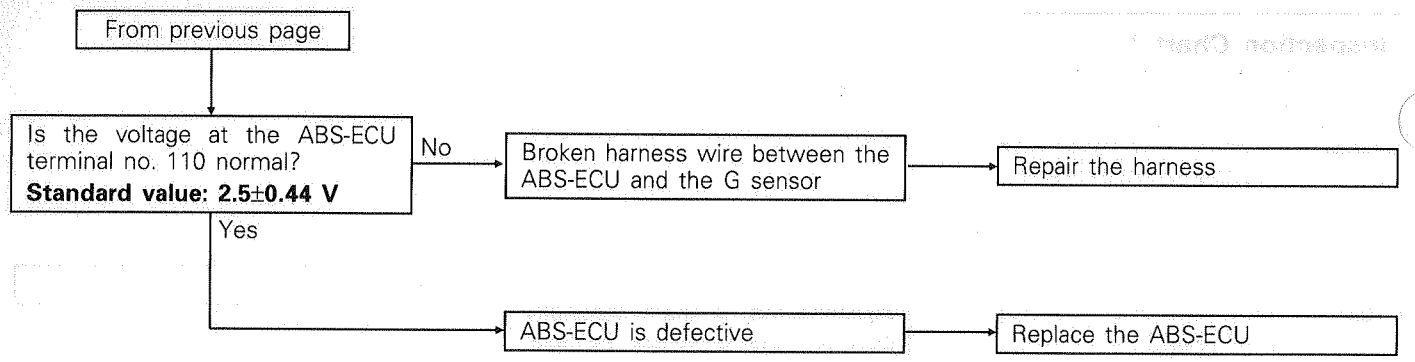

Inspection Chart 2

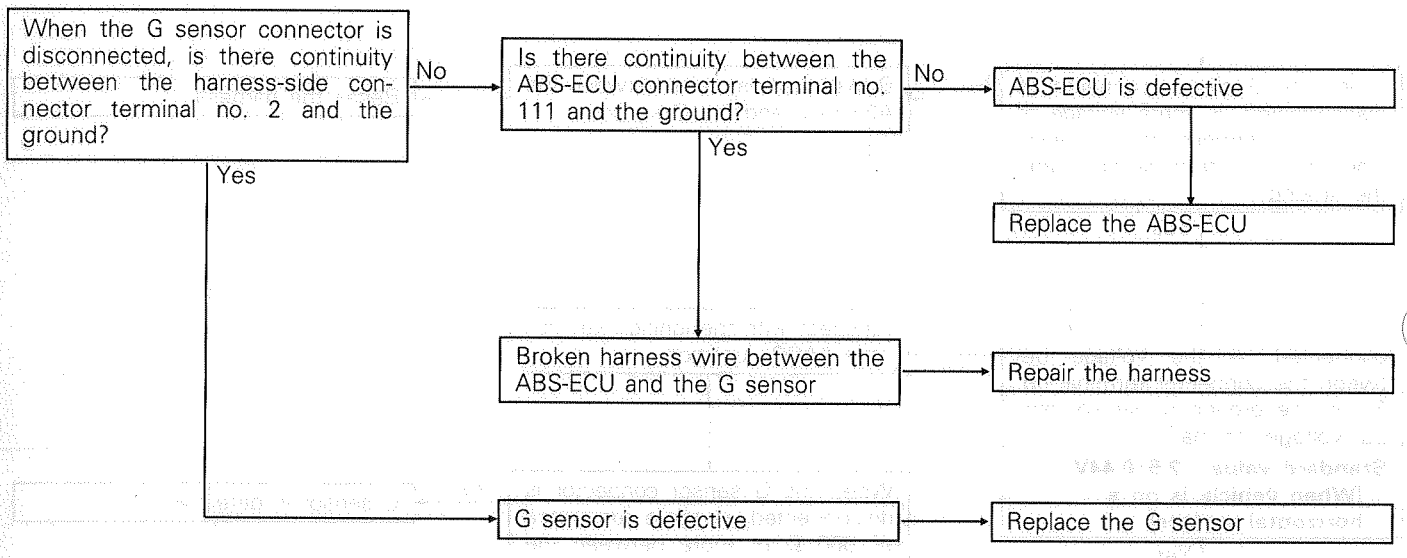

E-10 When diagnosis code no. 33 is displayed

[Comment] This malfunction code is output by the ABS-ECU in the following cases:

- Problem with the stop light switch being ON (even though the ABS is not operating, the stop light is continuously diagnosed as being ON for a continuous period of 15 minutes or more.)
- Broken harness wire in the stop light switch system.

(Hint) If the stop light illuminates and switches off normally, then there is a broken harness wire in the stop light switch input circuit, or the ABS-ECU circuit is defective.

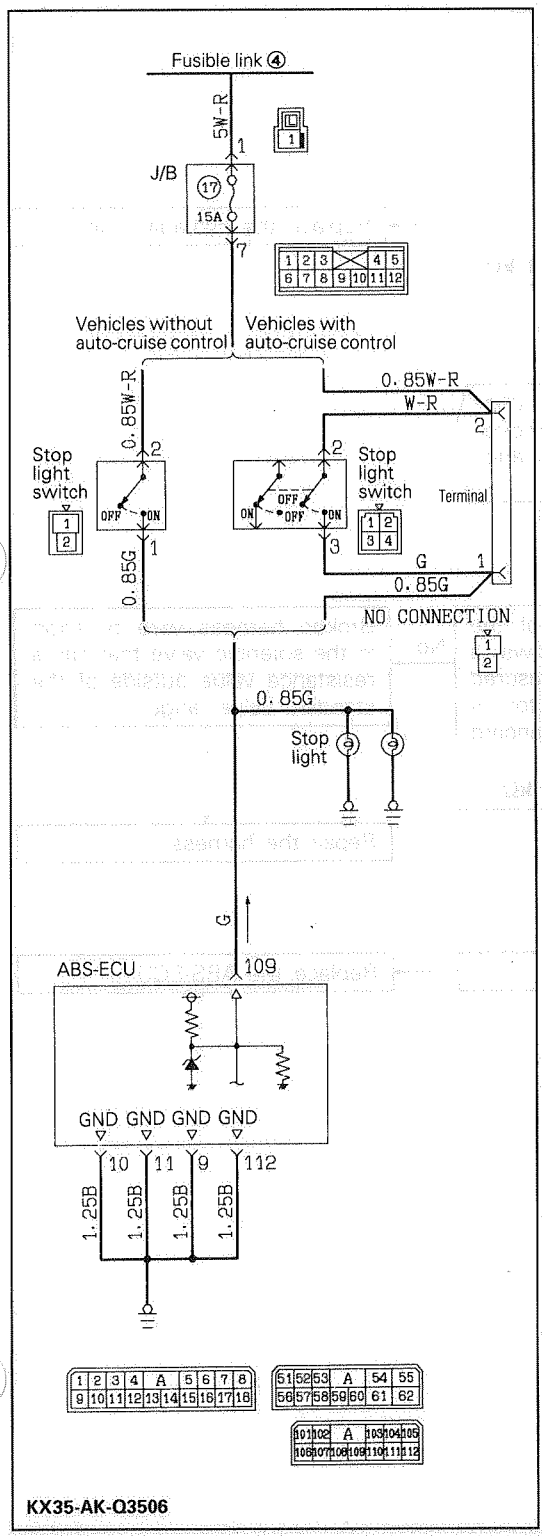

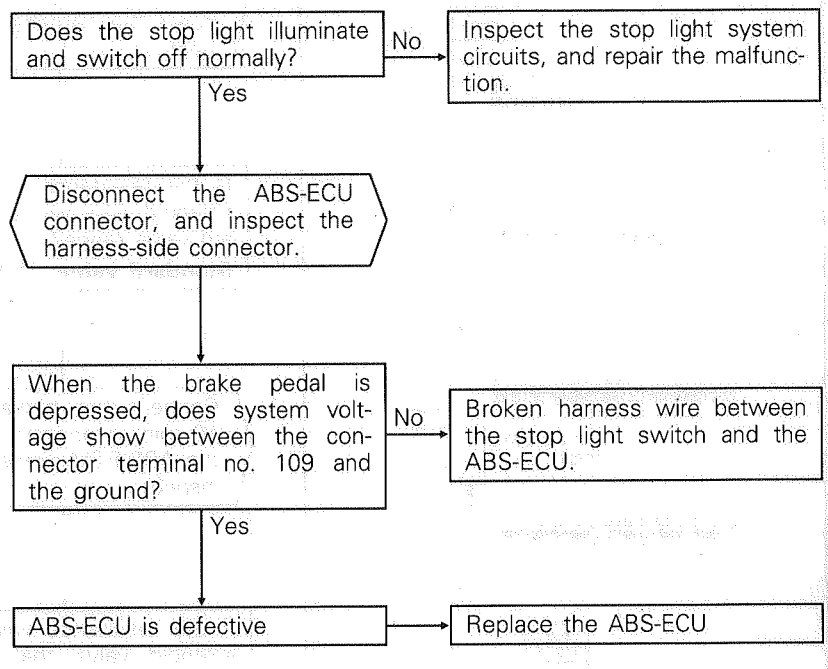

E-11 When diagnosis code nos. 41, 43 or 45 are displayed

[Comment] The ABS-ECU normally monitors the solenoid valve drive circuit. If there is no current flowing to the solenoid even when the solenoid is ON, or the current continues to flow to the solenoid even when the solenoid is OFF, the ABS-ECU diagnoses a broken wire or short in the solenoid coil or a broken wire or short in the harness, and this malfunction code is output.

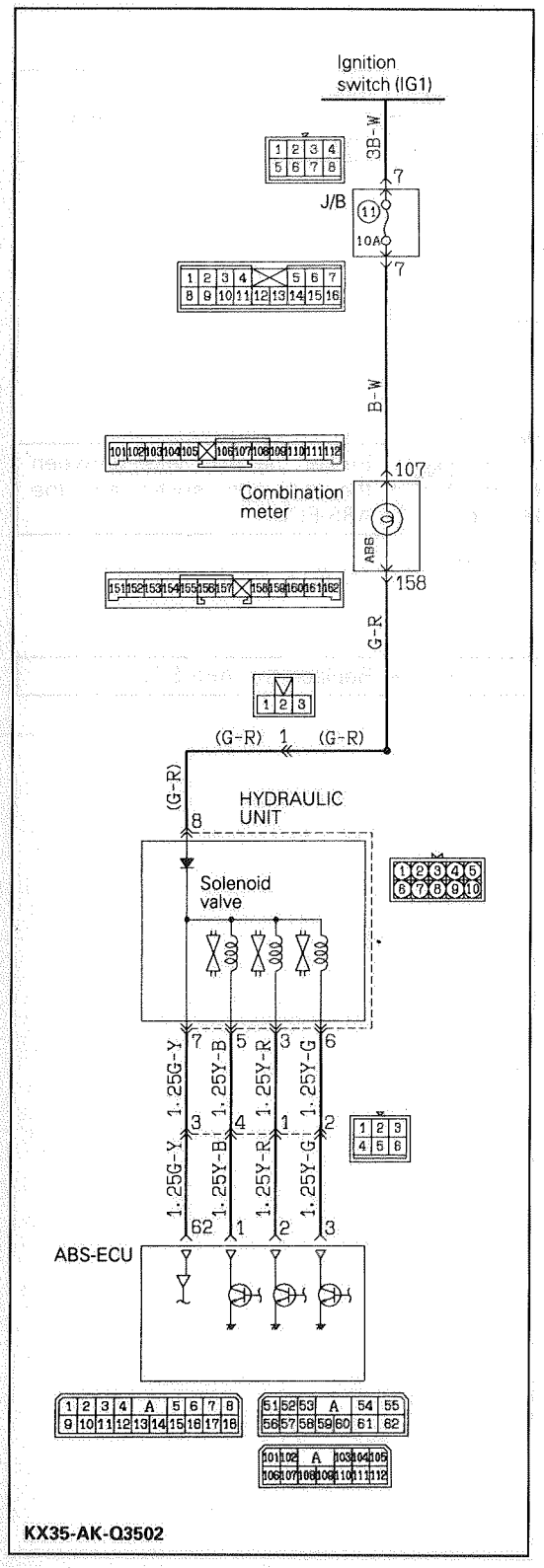

Remove the hydraulic unit 10 pin connector and inspect the harness-side connector.

↓

Is the resistance value of the solenoid valve within the standard value range?
Standard value: 1.1–1.3 kΩ

No → Replace the hydraulic unit

Yes ↓

Connect the hydraulic unit 10 pin connector, remove the ABS-ECU connector and inspect.

↓

If the resistance value of the solenoid valve that shows a malfunction code is measured at the ABS-ECU connector, is the value within the standard range?
Standard value: 1.1–1.3 kΩ

No → Broken harness wire or short in the solenoid valve that has a resistance value outside of the standard value range.

↓

Repair the harness

Yes ↓

ABS-ECU is defective → Replace the ABS-ECU

E-12 When diagnosis code no. 51 is displayed

[Comment] When the ignition switch is turned to ON, the valve relay is switched ON and OFF during the initial check, and the ABS-ECU compares the signal to the valve relay and the voltage in the valve power monitor line to check if the valve relay is operating normally. Normally, the valve relay is ON, so if power is not being supplied to the valve power monitor line, this malfunction code is output.

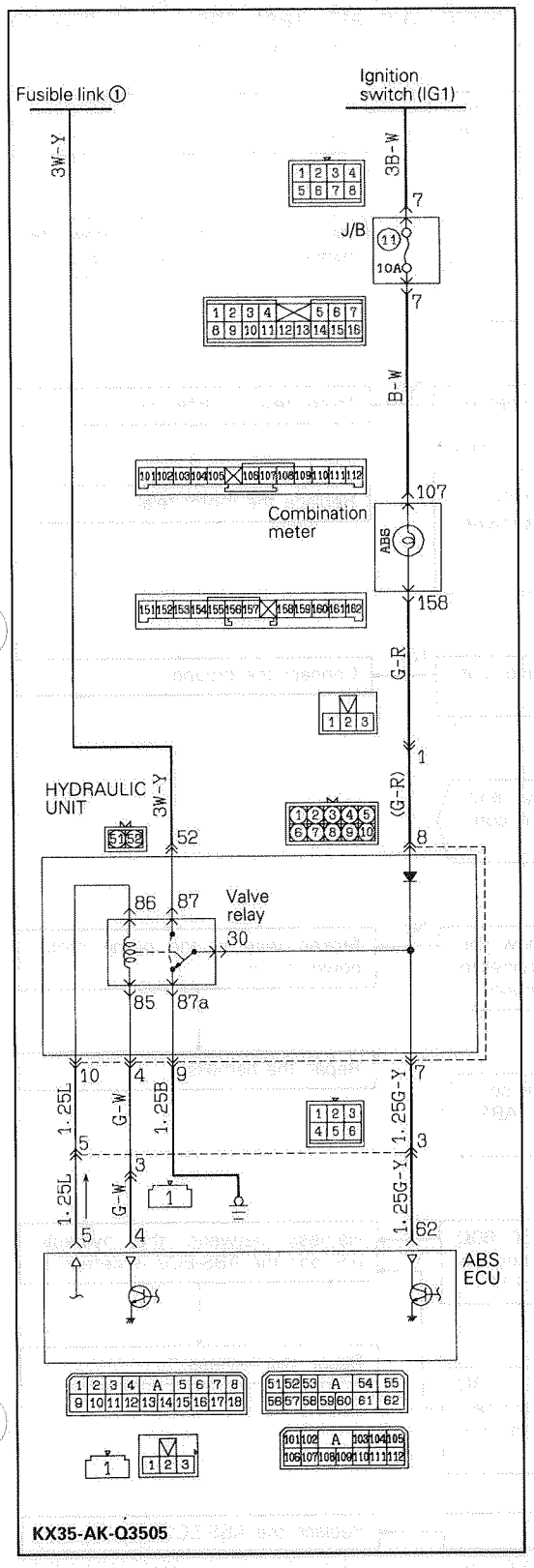

Remove the valve relay and inspect.

When the valve relay unit is inspected, are the results as follows?
- No.85–No.86: resistance value 60–120Ω
- No.30–No.87a: continuity
- No.30–No.87: no continuity

Battery voltage applied between terminals No.85–No.85
- No.30–No.87: continuity
- No.30–No.87a: no continuity

No → Valve relay is defective → Replace the valve relay

Yes

Replace the valve relay and remove the hydraulic unit connector

When the ignition switch is turned to "ON", does system voltage show between the hydraulic unit harness-side connector terminal no. 52 and the ground?

No → Broken wire in the hydraulic unit power harness → Repair the harness

Yes

Is there continuity between the hydraulic unit connector terminals no. 8 and no. 7?

No → Harness in the hydraulic unit is defective → Repair the harness or replace the hydraulic unit

Yes

Connect the hydraulic unit connector and remove the ABS-ECU connector

Does a resistance value of 60–120Ω show between the harness-side connector terminals no. 5 and no. 4?

No → Harness between the ABS-ECU and the hydraulic unit is defective → Repair the harness

Yes

When the ignition switch is turned to "ON", does system voltage show between the hydraulic unit harness-side connector terminal no. 62 and the ground?

No → Harness between the ABS-ECU and the hydraulic unit is defective → Repair the harness

Yes

ABS-ECU is defective → Replace the ABS-ECU

E-13 When diagnosis code no. 52 is displayed

[Comment] This code is output by the ABS-ECU when the motor relay or motor is as follows:

- Motor relay does not operate
- Motor will not work due to some problem
- Motor will not work because the ground is insufficient
- Motor will not stop

(Hint) Temporarily turn the ignition switch to OFF and after releasing the fail-safe mechanism, carry out an actuator test with the multi-use tester. If the sound of the motor working is heard during the multi-use tester actuator test, there is a broken wire or short in the motor monitor line.

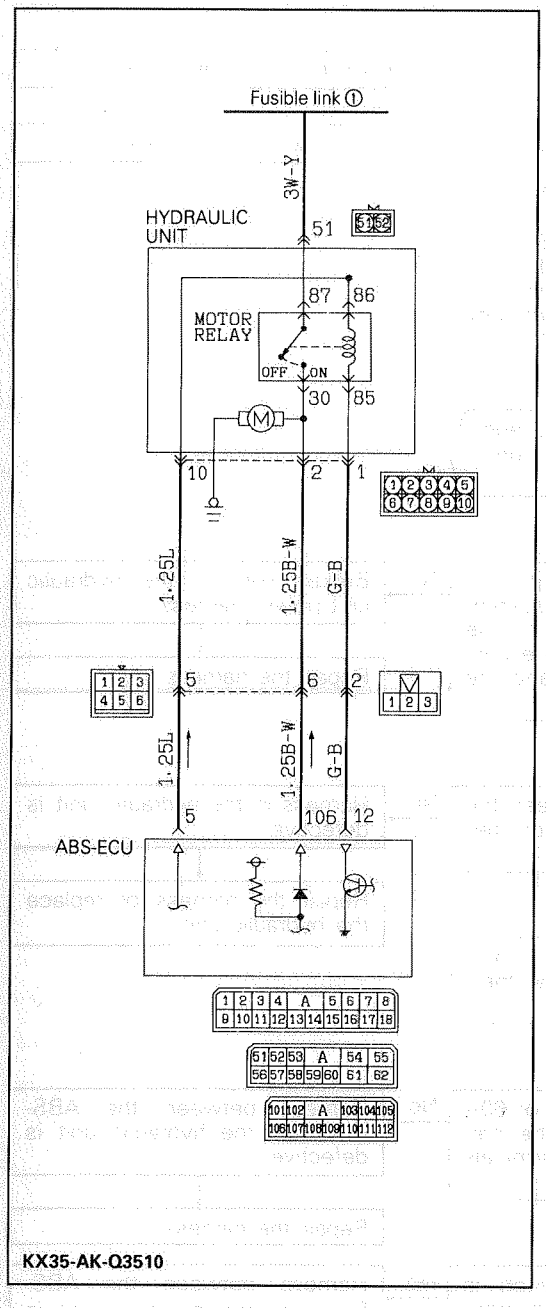

When carrying out a forced actuation test with the multi-use tester, can the sound of the motor working be heard?
- Yes → Broken wire or short in the motor monitor line. → Repair the harness between the hydraulic unit and the ABS-ECU.
- No → Remove the motor relay

When the motor relay is inspected, are the results as follows?
- No.85–No.86: resistance value 30–60Ω
- No.30–No.87: no continuity

Battery voltage applied between terminals No.85–No.86
- No.30–No.87: continuity

- No → Motor relay is defective → Replace the motor relay
- Yes

Is the pump motor ground connected properly?
- No → Connect the ground
- Yes

Install the motor relay and remove the hydraulic unit connector

Does system voltage show between the harness-side connector terminal no. 51 and the ground?
- No → Broken wire in the pump motor power circuit → Repair the harness
- Yes

Connect the hydraulic unit connector and remove the ABS-ECU connector

Is there a resistance of 30–60Ω between the harness-side connector terminals no. 5 and no. 12?
- No → Harness between the hydraulic unit and the ABS-ECU is defective → Repair the harness
- Yes

Is there a resistance of 0.1–0.3Ω between the harness-side connector terminal no. 106 and the ground?
- No
- Yes

ABS-ECU is defective → Replace the ABS-ECU

TSB Revision

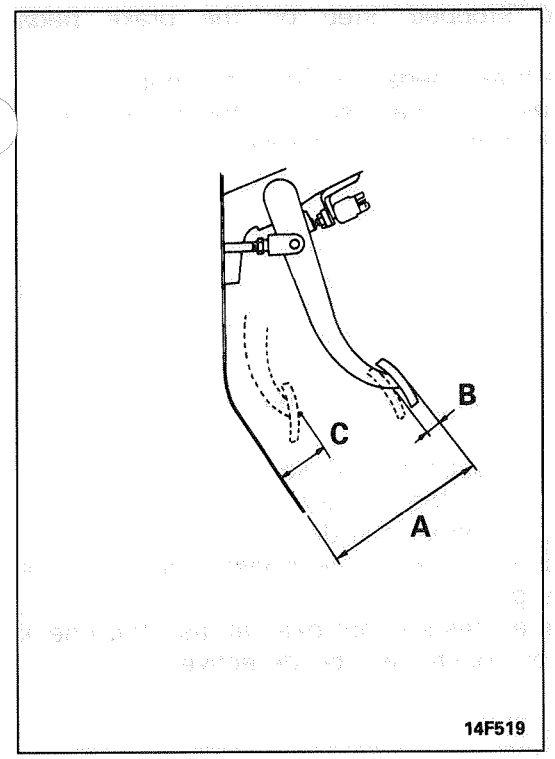

SERVICE ADJUSTMENT PROCEDURES

M35FAAK

BRAKE PEDAL INSPECTION AND ADJUSTMENT

1. Measure the brake pedal height (A) as illustrated.
   Standard value (A): 186–191 mm (7.3–7.5 in.)
2. Start the engine, depress the brake pedal with approximately 500N (110 lbs.) of force, and measure the clearance between the brake pedal and the floorboard.
   Standard value (C): 100 mm (3.94 in.) or more
3. While the engine is stopped, depress the brake pedal two or three times. After thus eliminating the vacuum in the brake booster, press the pedal down by hand, and confirm that the free play (B) is within the standard value range.
   Standard value (B): 3–8 mm (.12–.31 in.)

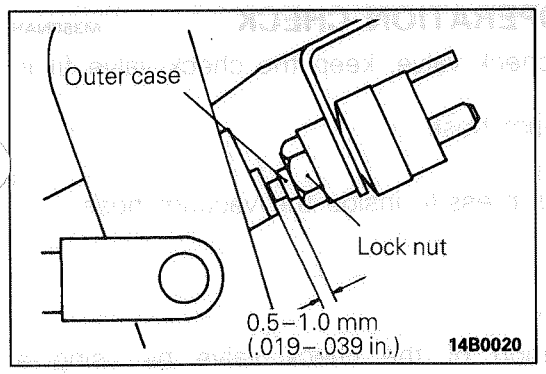

4. Adjust the brake pedal height.
   (1) Sufficiently loosen the stop light switch by loosening lock nut.
   (2) Adjust the brake pedal height by turning the operating rod with pliers (with lock nut loosened).
   (3) After turning the stop light switch until it contacts the pedal stop (until immediately before the brake pedal begins to move), turn the stop light switch back 1/2 to 1 revolution and secure with a lock nut.

   Caution
   Check that the stop light is not illuminated when the brake pedal is not depressed.
5. On vehicles with automatic transmission check the shift-lock mechanism. (Refer to GROUP 23 – Transmission Control.)

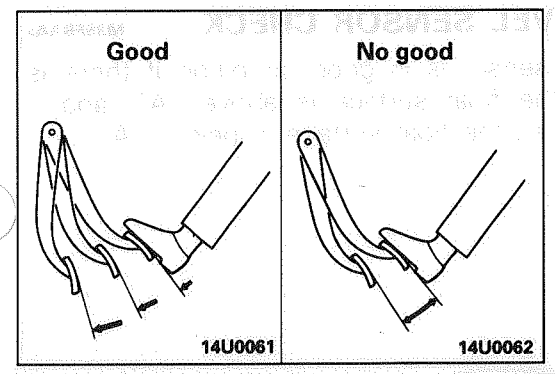

BRAKE BOOSTER OPERATING TEST

M35FCAM

For simple checking of the brake booster operation, carry out the following tests:

1. Run the engine for one or two minutes, and then stop it. If the pedal depresses fully the first time but gradually becomes higher when depressed succeeding times, the booster is operating properly. If the pedal height remains unchanged, the booster is defective.

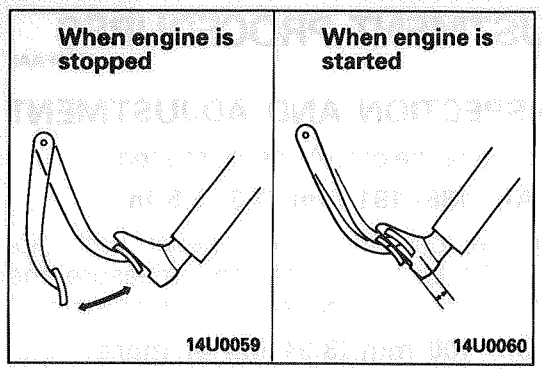

2. With the engine stopped, step on the brake pedal several times.
   Then step on the brake pedal and start the engine.
   If the pedal moves downward slightly, the booster is in good condition. If there is no change, the booster is defective.

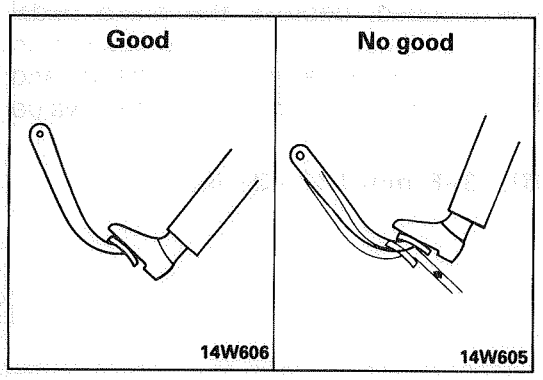

3. With the engine running, step on the brake pedal and then stop the engine.
   Hold the pedal depressed for 30 seconds. If the pedal height does not change, the booster is in good condition, if the pedal rises, the booster is defective.

If the above three tests are okay, the booster performance can be determined as good.
If one of the above three tests is not okay at last, the check valve, vacuum hose, or booster will be defective.

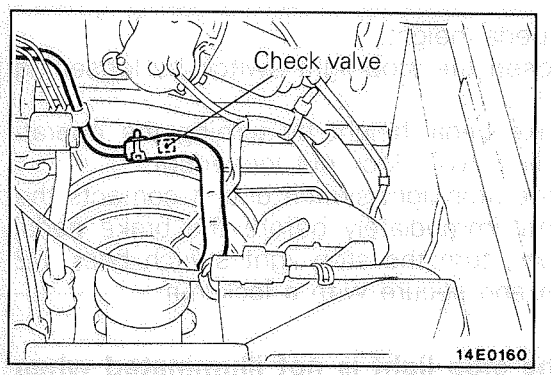

CHECK VALVE OPERATION CHECK M35FNAH

When checking the check valve, keep the check valve fit in the vacuum hose.

1. Remove the vacuum hose.

   NOTE
   The check valve is press-fit inside the vacuum hose.

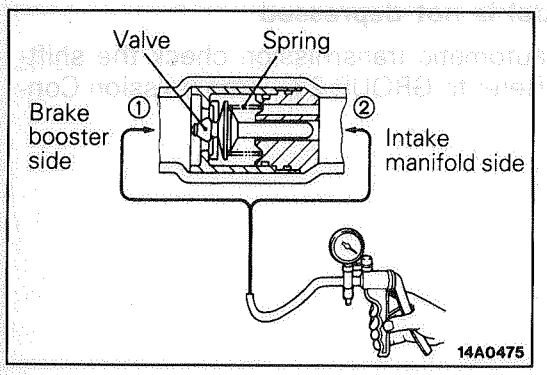

2. Check the operation of the check valve by using a vacuum pump.

Vacuum pump connection	Accept/reject criteria
Connection at the brake booster side ①	A negative pressure (vacuum) is created and held.
Connection at the engine side ②	A negative pressure (vacuum) is not created.

Caution
If the check valve is defective, replace it as an assembly unit together with the vacuum hose.

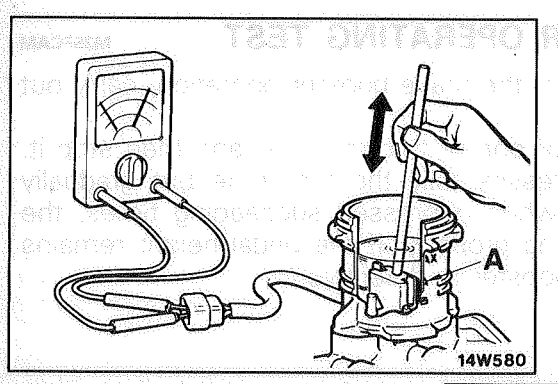

BRAKE FLUID LEVEL SENSOR CHECK M35FBAAa

The brake fluid level sensor is in good condition if there is no continuity when the float surface is above "A", and if there is continuity when the float surface is below "A".

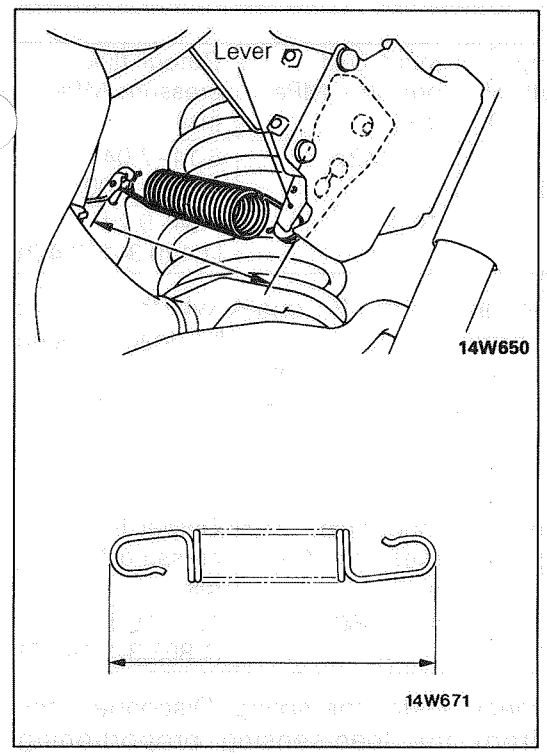

LOAD SENSING SPRING LENGTH CHECK AND ADJUSTMENT M35FLAF

1. Park the vehicle on a level ground. The vehicle should be unloaded and supported only by wheels.

   Caution
   Never support the vehicle with jacks or other similar means.

2. With the lever pressed all the way to the load-sensing proportioning valve side, check whether or not the length (shown in the figure) of the spring (the length between its ends) is the standard value.

   Standard value: 224–228 mm (8.8–9.0 in.)

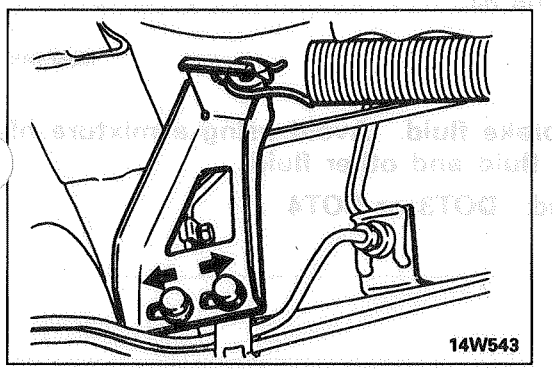

3. If the spring length is not within the standard value, loosen the bolt attaching the support and adjust the distance by moving the support.

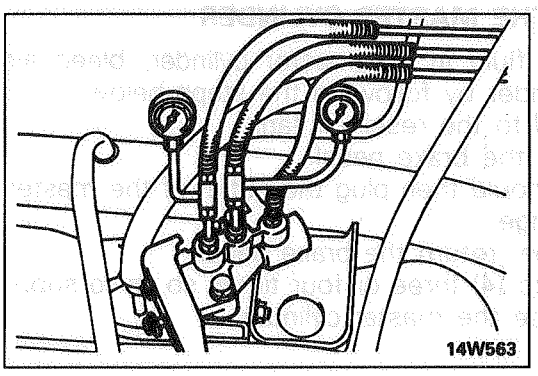

LOAD SENSING PROPORTIONING VALVE FUNCTION TEST M35FMAE

1. Connect pressure gages to the input and output ports of the load sensing proportioning valve. Bleed the system.

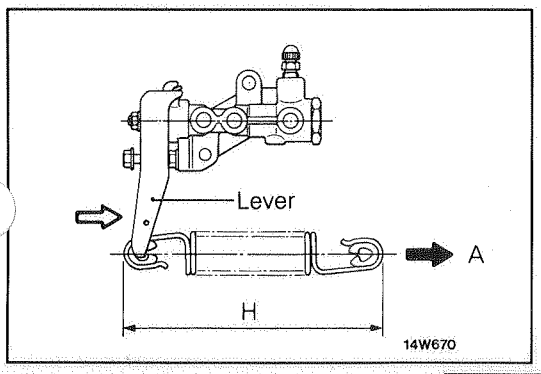

2. Disconnect the spring at the support side.
3. Place the spring so that it is in parallel with the load-sensing proportioning valve, and then pull in the direction indicated by arrow A so that its length H shown in the figure (the length between its ends) is as noted below.

   NOTE
   At this time the lever is pressed all the way to the load-sensing proportioning valve side.

   Check at this time whether or not the output fluid's pressure, relative to the load-sensing proportioning valve's input fluid pressure, is within the standard value.

Standard value:

Items	Spring length H mm (in.)	Input fluid pressure MPa (psi)	Output fluid pressure MPa (psi)
Specifications	226.7 (8.9)	10 (1,422)	6.14–7.04 (873.3–1,001.3)
		18 (2,560)	7.94–9.24 (1,129.3–1,314.2)

4. In the same manner as in step 3., check whether or not the output fluid's pressure, relative to the load-sensing proportioning valve's input fluid pressure, is within the standard valve when the spring's length H is the dimension noted below.

Standard value:

Items	Spring length H mm (in.)	Input fluid pressure MPa (psi)	Output fluid pressure MPa (psi)
Specifications	257.7 (10.1)	18 (2,560)	13.1–15.1 (1,863.3–2,147.7)

5. After making the check, install the spring. Disconnect the pressure gages from the load-sensing proportioning valve and bleed the air.

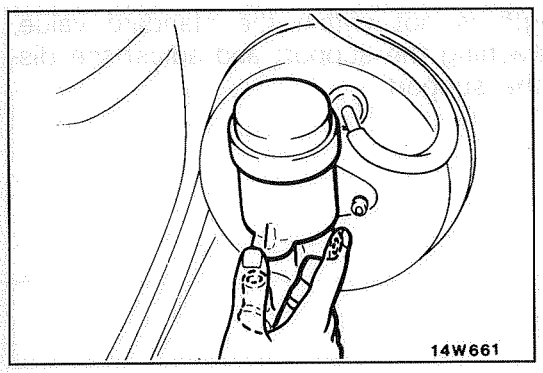

BLEEDING M35FYAK

Caution
Use the specified brake fluid. Avoid using a mixture of the specified brake fluid and other fluid.

Specified brake fluid: DOT3 or DOT4

AIR BLEEDING OF THE MASTER CYLINDER

If there is no brake fluid in the master cylinder, bleed air from the master cylinder by following the steps below.

(1) Supply brake fluid to the reservoir tank.
(2) Depress and hold the brake pedal.
(3) Another person should then plug the outlet of the master cylinder with a finger.
(4) In the (3) condition, return the brake pedal.
(5) Repeat steps (2) to (4) three or four times so as to supply brake fluid inside the master cylinder.

Vehicles without ABS

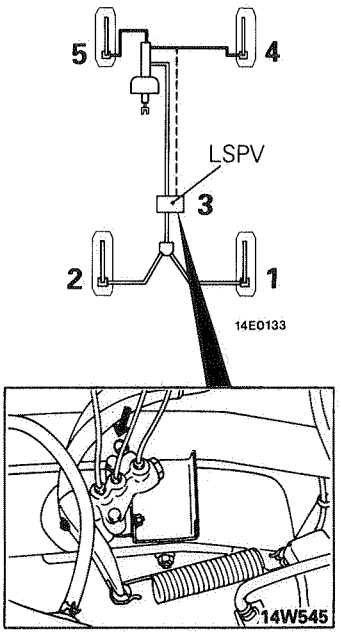

Vehicles with ABS

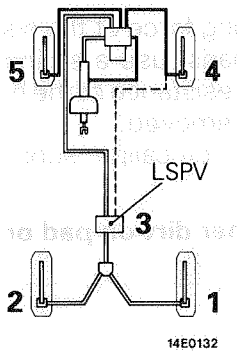

AIR BLEEDING OF THE BRAKE PIPE LINE

Bleed the brake system in the sequence shown in the illustration.
Furthermore, for vehicles with ABS, start the engine before bleeding the air.

Caution
When supplying brake fluid for vehicles with ABS, the filter should be installed to the master cylinder reserve tank.

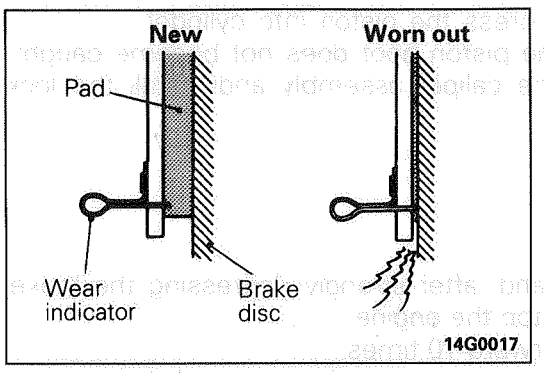

DISC BRAKE PAD CHECK M35FZAO

Check brake pad thickness through caliper body check port.

Standard valve:	**10.0 mm (.39 in.)**
Limit:	**2.0 mm (.079 in.)**

Replace brake pads on both sides when wear exceeds limit value. Replace both left and right brake pads at a time.

NOTE
The brake pads have been equipped with wear indicator, so that when the brake pad thickness reaches 2 mm (.08 in.), the wear indicator touches the brake disc and produces a warning squeaking sound.

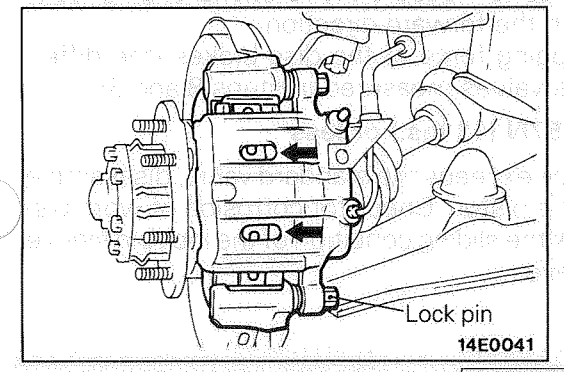

FRONT DISC BRAKE PAD REPLACEMENT AND BRAKE DRAG CHECK M35FQAJ

1. Remove lock pin. Lift caliper assembly and retain with wires.

Caution
Do not wipe off the special grease that is on the lock pin or allow it to contaminate the lock pin.

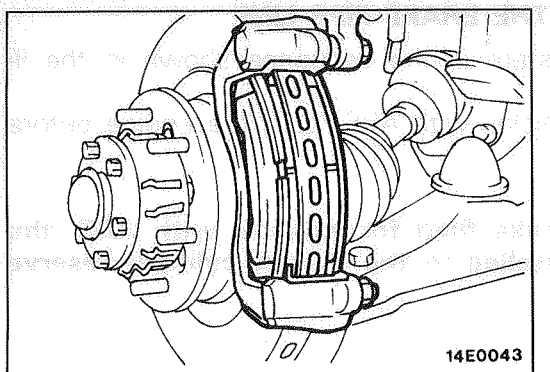
14E0043

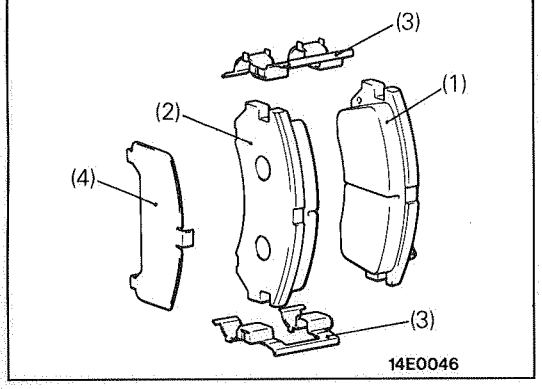

14E0046

2. Remove the following parts from caliper support.
   (1) Pad and wear indicator assembly
   (2) Pad assembly
   (3) Clip
   (4) Outer shim

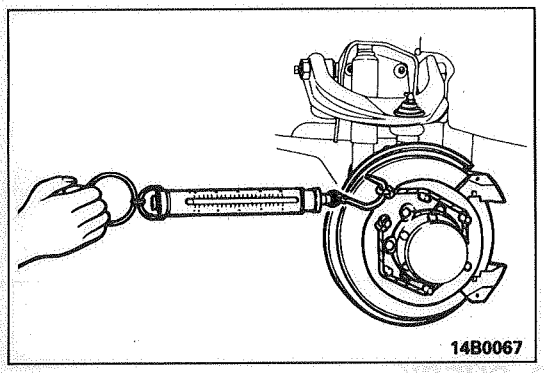
14B0067

3. In order to measure the dragging force of the disc brakes after installation of the brake pads, use a spring balance to measure the rotational sliding resistance of the hub in the forward direction with the pads removed.
4. Securely attach the pad clip to the caliper support.

Caution
Do not deposit grease or other dirt on pad or brake disc friction surfaces.

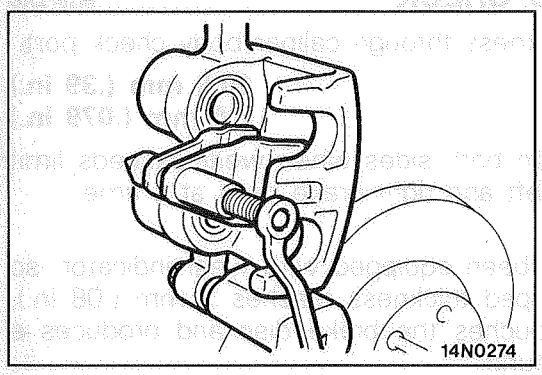
14N0274

5. Clean piston and press the piston into cylinder.
   Be careful that the piston boot does not become caught, when lowering the caliper assembly and install the lock pin.

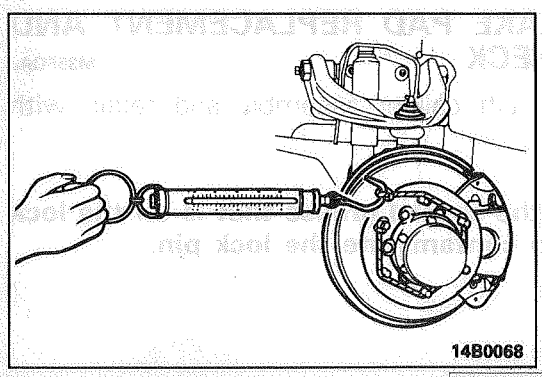
14B0068

6. Start the engine and, after strongly depressing the brake pedal 2-3 times, stop the engine.
7. Turn brake disc forward 10 times.
8. Use a spring balance to measure the rotational sliding resistance of the hub in the forward direction.
9. Calculate the dragging force of the disc brakes (the difference between the values measured in steps 8 and 3).

   Standard value: 57N (13 lbs.) or less

10. If the dragging force exceeds the standard value, disassmble piston and clean the piston. Check for corrosion of worn piston seal, and check the sliding condition of the lock pin sleeve and guide pin sleeve.

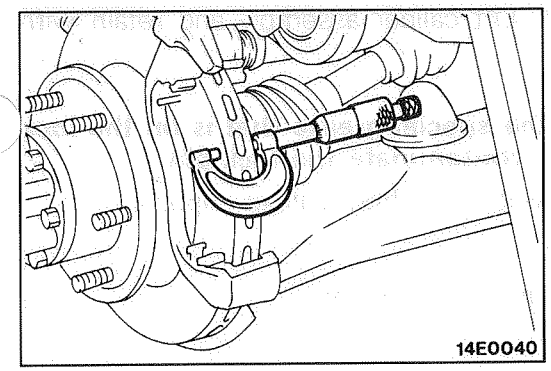

FRONT BRAKE DISC THICKNESS CHECK M35FRAB

Remove dirt and rust from brake disc surface. Measure disc thickness at 4 locations or more.

Standard value: **24 mm (.94 in.)**
Limit: **22.4 mm (.882 in.)**

Replace the discs and pad assembly for both sides left and right of the vehicle if they are worn beyond the specified limit.

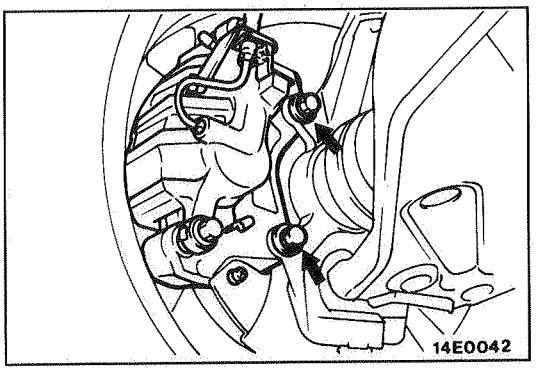

FRONT BRAKE DISC RUN-OUT CHECK M35FSAB

1. Remove the caliper support; then raise the caliper assembly upward and secure by using wire.

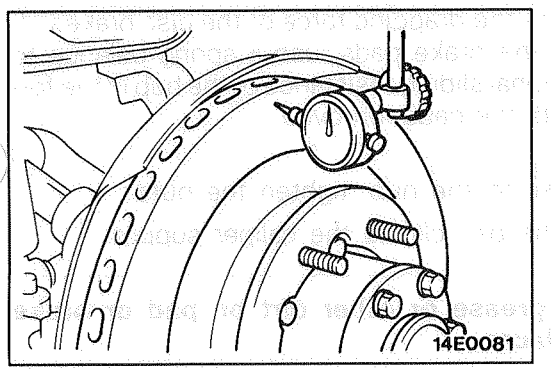

2. Place a dial gage approximately 5 mm (.2 in.) from the outer circumference of the brake disc, and measure the run-out of the disc.

   Limit: 0.1 mm (.0039 in.)

   If the measurement exceeds the limit, change the relative position of the hub and brake disc, and measure the run-out again. If the result still does not fall within the limit, check the run-out of the hub, and replace either the hub or disc, whichever is appropriate.

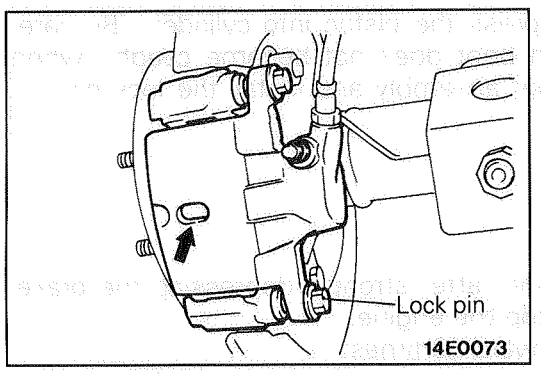

REAR DISC BRAKE PAD CHECK AND REPLACEMENT M35FUAG

1. Check brake pad thickness through caliper body check port.

   Standard value: **9.0 mm (.35 in.)**
   Limit: **2.0 mm (.079 in.)**

   Caution
   1. **When the limit is exceeded, replace the pads at both sides, and also the brake pads for the wheels on the opposite side at the same time.**
   2. **If there is a significant difference in the thicknesses of the pads on the left and right sides, check the sliding condition of the piston, lock pin sleeve and guide pin sleeve.**

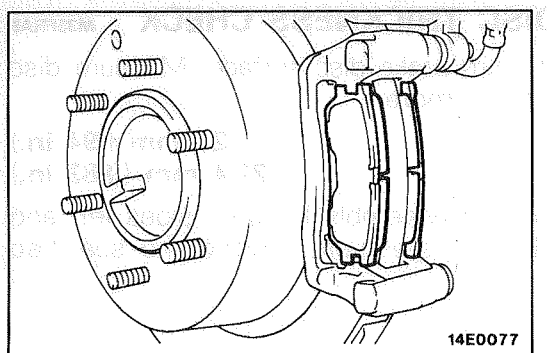

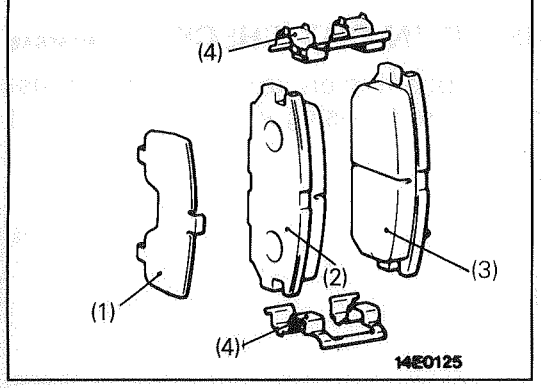

2. Remove lock pin. Lift caliper assembly and retain with wires.

Caution
Do not wipe off the special grease that is on the lock pin or allow it to contaminate the lock pin.

3. Remove the following parts from caliper support.
   (1) Outer shim
   (2) Pad assembly
   (3) Pad and wear indicator assembly
   (4) Clip

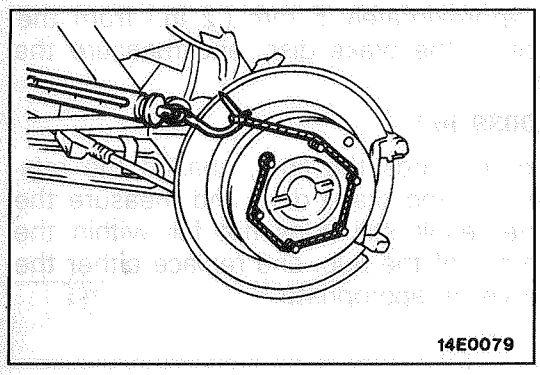

4. In order to measure the dragging force of the disc brakes after installation of the brake pads, use a spring balance to measure the rotational sliding resistance of the hub in the forward direction with the pads removed.

   NOTE
   To secure the disc to the hub, tighten the nuts.

5. Securely attach the pad clip to the caliper support.

Caution
Do not deposit grease or other dirt on pad or brake disc friction surfaces.

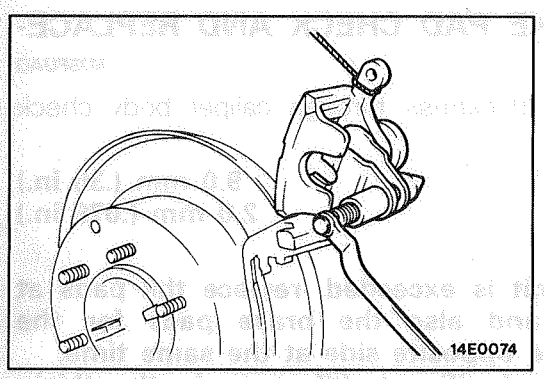

6. Clean piston and press the piston into cylinder. Be careful that the piston boot does not become caught, when lowering the caliper assembly and install the lock pin.

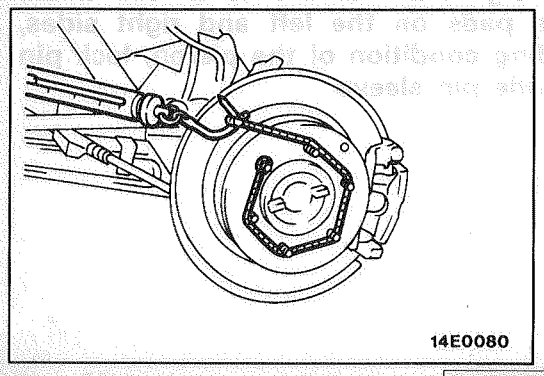

7. Start the engine and, after strongly depressing the brake pedal 2-3 times, stop the engine.
8. Turn brake disc forward 10 times.
9. Use a spring balance to measure the rotational sliding resistance of the hub in the forward direction.
10. Calculate the dragging force of the disc brakes (the difference between the values measured in steps 9 and 4).

Standard value: 57N (13 lbs.) or less

11. If the dragging force exceeds the standard value, disassemble piston and clean the piston. Check for corrosion or worn piston seal, and check the sliding condition of the lock pin sleeve and guide pin sleeve.

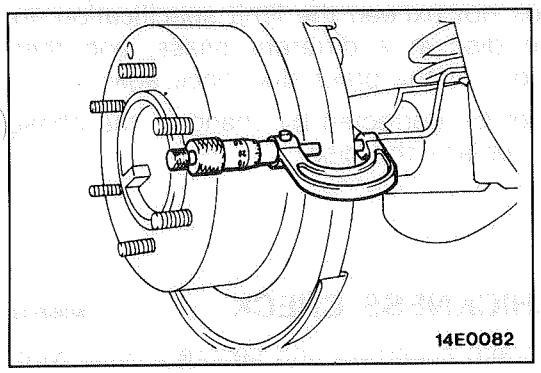

REAR BRAKE DISC THICKNESS CHECK M35FVAB

1. Remove dirt and rust from brake disc surface.
2. Measure disc thickness at 4 locations or more.

Standard value: **18.0 mm (.71 in.)**
Limit: **16.4 mm (.646 in.)**

Replace the discs and pad assembly for both sides left and right of the vehicle if they are worn beyond the specified limit.

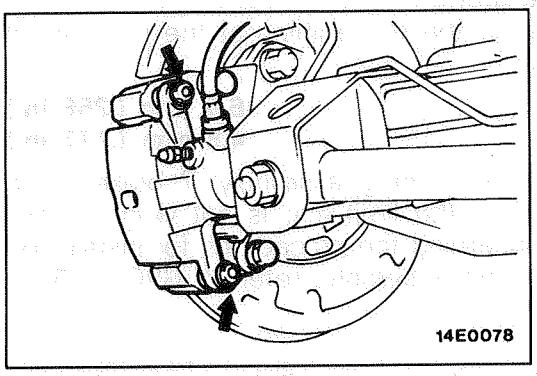

REAR BRAKE DISC RUN-OUT CHECK M35PWAB

1. Remove the caliper support, raise the caliper assembly, and secure it by using a wire, etc.

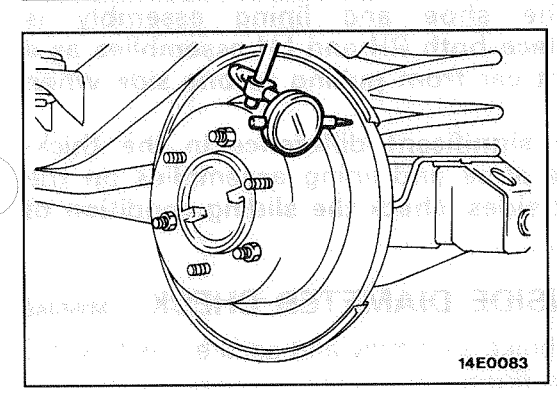

2. Place a dial gage approximately 5 mm (.2 in.) from the outer circumference of the brake disc, and measure the run-out of the disc.

Limit: 0.08 mm (.0031 in.)

NOTE
To secure the disc to the hub, tighten the nuts.

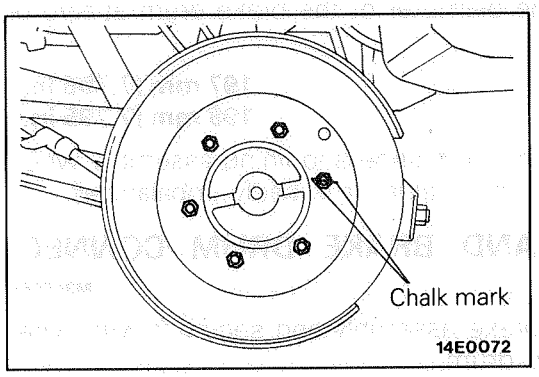

REAR BRAKE DISC RUN-OUT CORRECTION M35FXAC

1. If the run-out of the brake disc is equivalent to or exceeds the limit specification, change the phase of the disc and axle shaft and then measure the run-out again.
   (1) Before removing the brake disc, chalk both sides of the wheel stud on the side at which run-out is greatest.

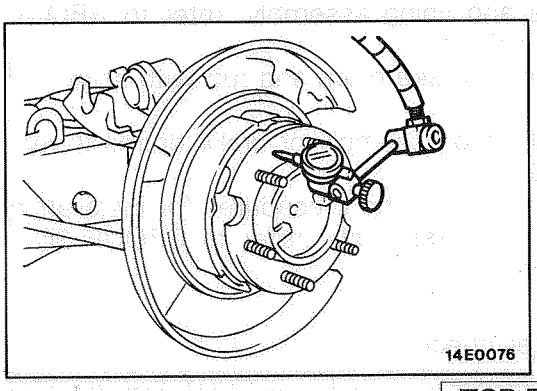

   (2) Remove the brake disc, and then place a dial gage, then move the hub in the axial direction and measure the play.

Limit: 0.25 mm (.0098 in.) or less

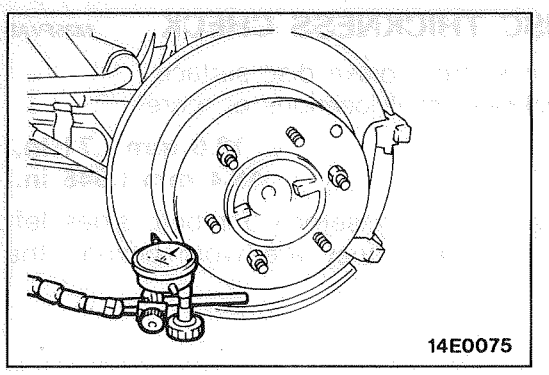
14E0075

(3) If the play does not exceed the limit specification, install the brake disc at a different phase, and then check the run-out of the brake disc once again.

2. If the runout cannot be corrected by changing the phase of the brake disc, replace the disc.

BRAKE LINING THICKNESS CHECK M35FIAE

1. Remove the rear brake assembly and secure it with wire.
2. Remove the brake drum.
3. Measure the wear of the brake lining at the place worn the most.

Standard value: 6.5 mm (.256 in.)
Limit: 4.5 mm (.177 in.)

Replace the shoe and lining assembly if brake lining thickness is less than the limit if it is not worn evenly. For information concerning the procedures for installation of the shoe and lining assembly, refer to GROUP 36 – Parking Brake Drum.

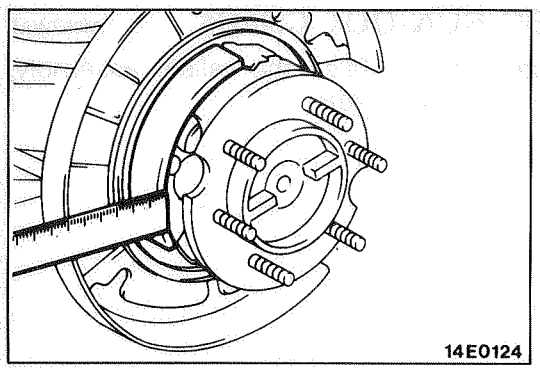
14E0124

Caution

1. Whenever the shoe and lining assembly is replaced, replace both RH and LH assemblies as a set to prevent car from pulling to one side when braking.
2. If there is a significant difference in the thicknesses of the shoe and lining assemblies on the left and right sides, check the sliding condition of the piston.

BRAKE DRUM INSIDE DIAMETER CHECK M35FJAE

1. Remove the rear brake assembly and secure it with wire.
2. Remove the brake drum.
3. Measure the inside diameter of the brake drum at two or more locations.

Standard value: 197 mm (7.756 in.)
Limit: 198 mm (7.795 in.)

4. Replace brake drums and shoe and lining assembly when wear exceeds the limit value or is badly imbalanced.

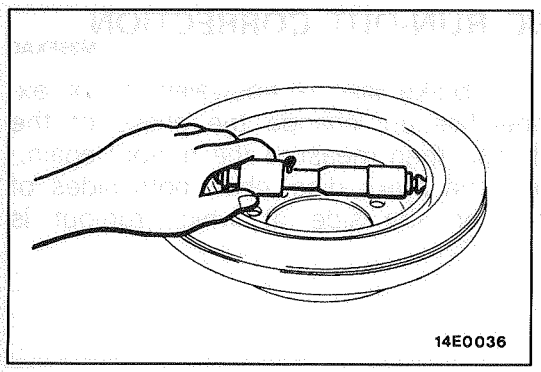
14E0036

BRAKE LINING AND BRAKE DRUM CONNECTION CHECK M35FPAE

1. Remove the rear brake assembly and secure it with wire.
2. Remove the brake drum.
3. Remove the shoe and lining assembly, refer to GROUP 36 – Parking Brake Drum.
4. Chalk inner surface of brake drum and rub with shoe and lining assembly.
5. Replace shoe and lining assembly or brake drums if very irregular contact area.
6. For information concerning the procedures for installation of the shoe and lining assembly, refer to GROUP 36 – Parking Brake Drum.

NOTE
Wipe off chalk after check.

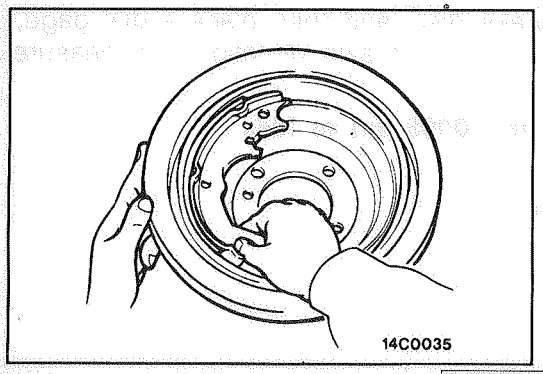
14C0035

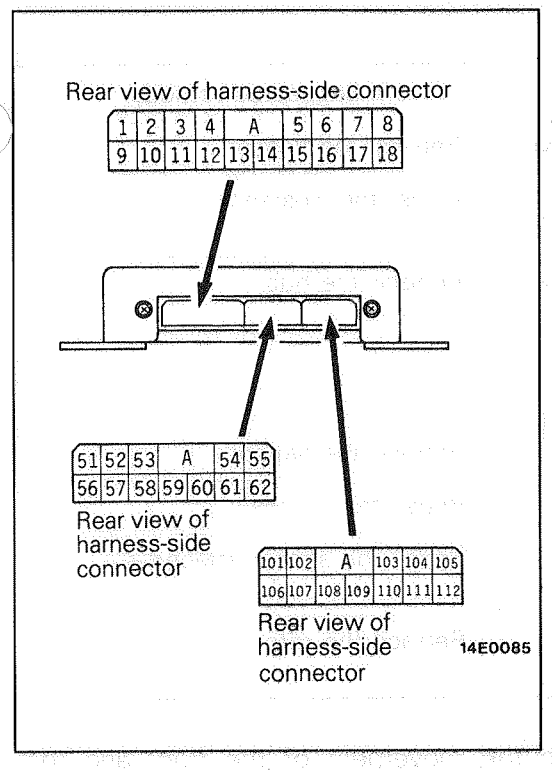

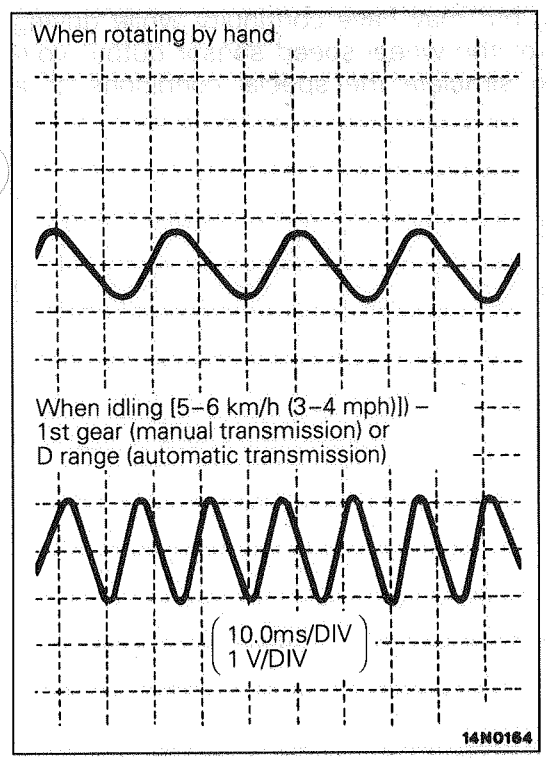

WHEEL SPEED SENSOR OUTPUT VOLTAGE MEASUREMENT <A.B.S.>

M35FOAS

1. Check that the clearance between the wheel speed sensor and the rotor are within the standard values.
2. Raise up the wheels and release the parking brake.
3. Remove the ABS-ECU harness connector and measure from the harness-side connector.

Caution
Be sure to remove the connector double lock and insert the probe into the harness side. Inserting it into the terminal side will result in a bad connection.

4. Rotate the wheel by hand to be measured at approximately 1/2 – 1 rotations per second and check the output voltage using a voltmeter (AC mV range) or an oscilloscope.

<Terminal no.>

Polarity	Front LH	Front RH	Rear LH	Rear RH
+	52	51	8	53
–	57	56	18	58

Output voltage:
When measuring with a voltmeter:
70mV or more
When measuring with an oscilloscope:
200mVp-p or more

5. If the output voltage is lower than the above values, the reason could be as follows:
   - Excessive clearance between the wheel speed sensor pole piece and the rotor
   - Wheel speed sensor is defective

   If necessary, adjust the wheel speed sensor or replace it.
6. Next, to observe the output of the wheel speed sensors, move the transfer shift lever to "4H", and the transmission control lever to "1" (M/T vehicles) or "D" range (A/T vehicles), and rotate the wheels.

NOTE
1. Check the connection of the sensor harness and connector before using the oscilloscope
2. The wave form measurements can also be taken while the vehicle is actually moving.
3. The output voltage will be small when the wheel speed is low, and similarly it will be large when the wheel speed is high.

WAVE OBSERVATION POINTS

Symptom	Cause	Suggested remedy
Wave amplitude is too small, or doesn't appear at all	Wheel speed sensor is defective	Replace the sensor
	Wrong clearance between the pole piece and rotor	Adjust the clearance
Excessive variation in the wave amplitude (However, if the lowest amplitude occurs at 200mV-p-p, there is no problem)	Excessive runout or eccentricity in the axle hub	Replace the hub
Noise or interference in the wave pattern	Broken sensor wire	Replace the sensor
	Broken harness wire	Repair the harness
	Defective wheel speed sensor attachment	Repair the sensor attachment
	Eccentric rotor or broken rotor teeth	Replace the rotor

NOTE
As the wheel speed sensor harness move in conjunction with the movement of the front and rear suspension, the wires might break while driving on rough roads, but may have continuity while driving on normal roads. Accordingly, when measuring the wave pattern of the wheel speed sensor output voltage, take a measurement while shaking the sensor harness to simulate the special conditions of a rough road.

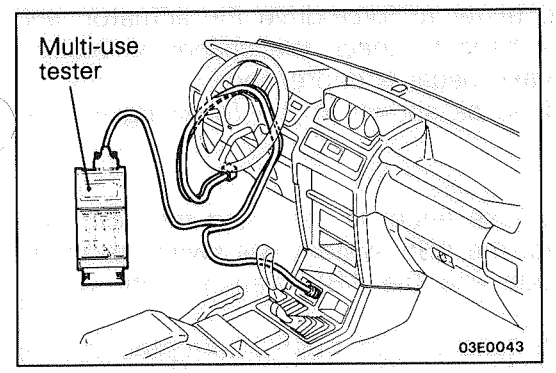

HYDRAULIC UNIT CHECK <ABS>

1. Jack up the vehicle and support it on axle stands.
2. Release the parking brake and feel the drag force (drag torque) on each wheel brake.
3. Turn the ignition key to the ACC position and set the multi-use tester as shown in the illustration.
4. After checking that the selector lever is in neutral, start the engine.

   Caution
   At this time, check that the ABS warning light illuminates for a brief period before turning off. If it doesn't turn off, refer to the "ANTI-LOCK BRAKING SYSTEM TROUBLESHOOTING" section (P.35-6).
5. Depress the brake pedal to lock the wheels.
6. Select the item number on the multi-use tester actuator test for the wheel to be inspected.

Item no.	Drive object	
01	Front left wheel	Solenoid valve and pump monitor in the hydraulic unit corresponding to each wheel at left
02	Front right wheel	
03	Rear wheels	

7. Use the multi-use tester to force-drive the actuator, and turn the wheel by hand to check the change in braking force when the brake pedal is depressed.
The result should be as shown in the following illustration.

NOTE
1. When the multi-use tester is used and the ABS system is selected, the ABS system will switch to multi-use tester mode and the ABS warning light will illuminate.
2. When the ABS function has been interrupted by the fail-safe, the multi-use tester actuator testing cannot be used.

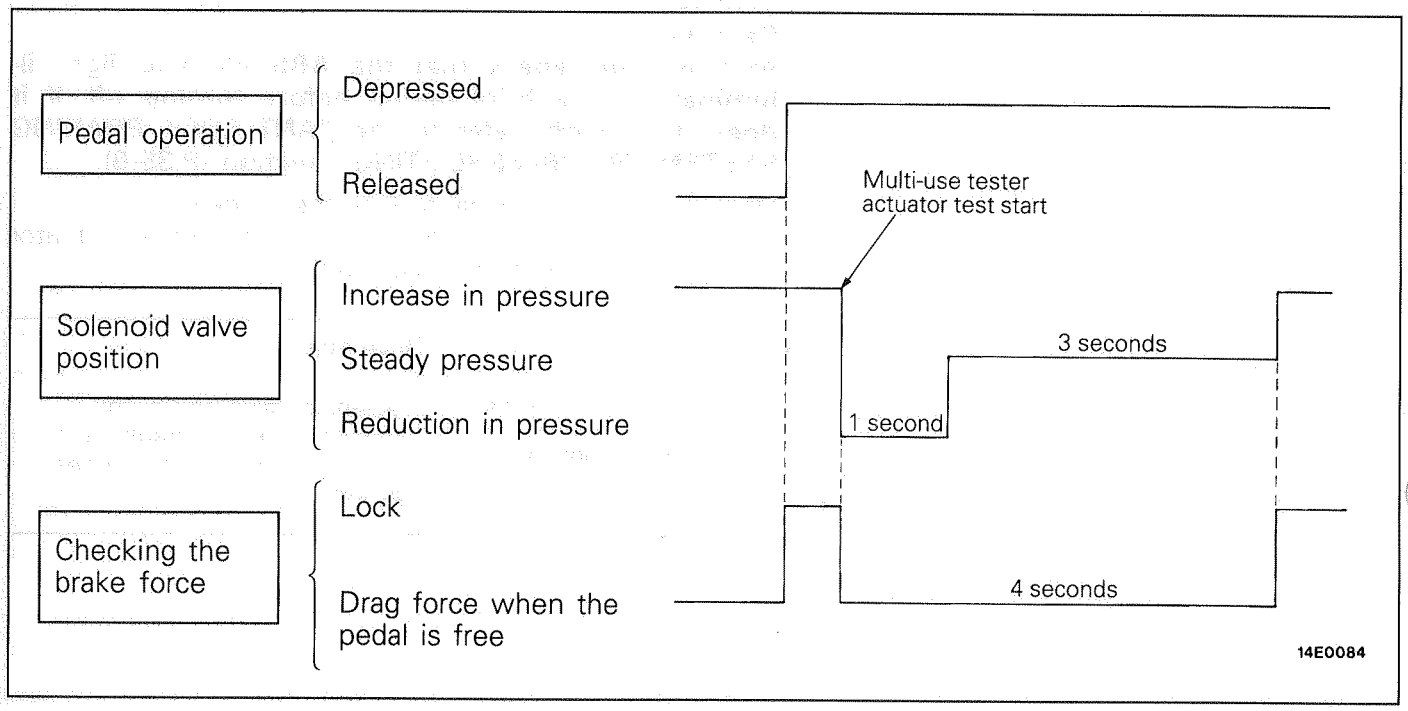

8. If a different result is obtained when checking, correct it by following the procedure in the "Diagnosis Table for Simple Inspection" below.

Diagnosis Table for Simple Inspection

Diagnosis		Cause	Suggested remedy
Normal	Problem		
After locking for a 4 second period, the braking force will release.	The wheel will not lock even when the pedal is depressed.	Blockage in the brake line outside the hydraulic unit	Inspect the brake line and clean
		Blockage in the oil pressure circuit in the hydraulic unit	Replace the hydraulic unit
	Braking force does not release.	Hydraulic unit brake pipes are incorrectly connected	Connect correctly
		Hydraulic unit solenoid valve is defective	Replace the hydraulic unit

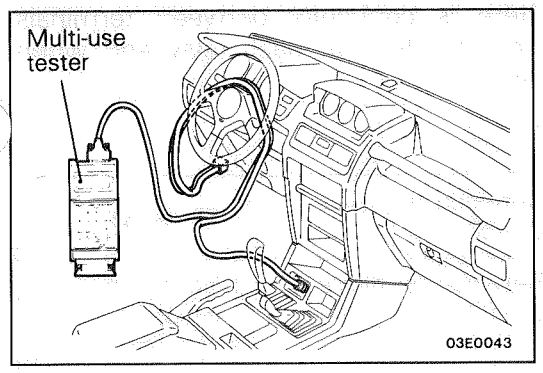

G-SENSOR OUTPUT VOLTAGE CHECK <A.B.S.>

M35FOAT

1. Unload the vehicle and move it to a horizontal surface.
2. Turn the ignition key to the ACC position and connect the multi-use tester as shown in the illustration.

   Caution
   Make certain that the ignition switch is OFF when the multi-use tester is connected or disconnected.
3. Start the engine.

   Caution
   At this time, check that the ABS warning light momentarily illuminates before turning off.
   If it does not turn off, refer to "ANTI-LOCK BRAKING SYSTEM TROUBLESHOOTING" (P.35-6).
4. Check whether the G-sensor output voltage is within the standard value range.

   Standard value: 2.5±0.44 V
5. If the G-sensor output voltage is not within the standard value range, check the installation condition of the G sensor; if there is bolt loose, deformation of the G-sensor bracket, etc., repair it. If the problem is not repairable, replace the G sensor.

A.B.S. POWER RELAY CHECK <A.B.S.>

M35FOAU

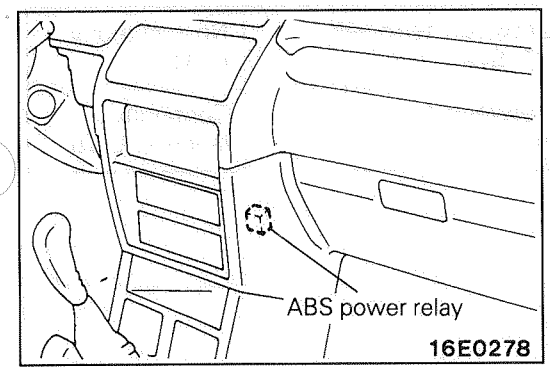

1. Remove the A.B.S. power relay.

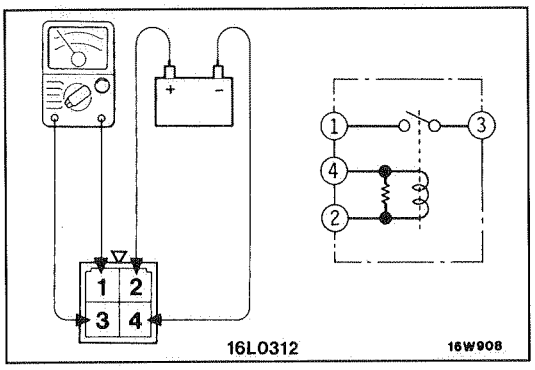

2. Connect battery to terminal 2 and check continuity between terminals with terminal 4 earthed.

Power is supplied	1–3 terminals	Continuity
Power is not supplied	1–3 terminals	No continuity
	2–4 terminals	Continuity

VALVE RELAY AND MOTOR RELAY CHECK <A.B.S.>

M35FOAV

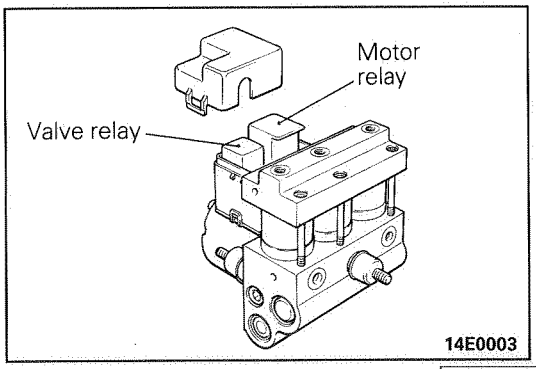

1. Remove the motor relay and valve relay from the hydraulic unit.

Motor relay

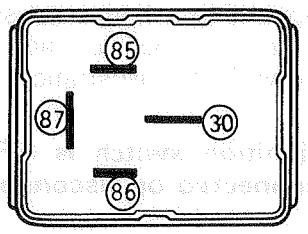

16R0670

Valve relay

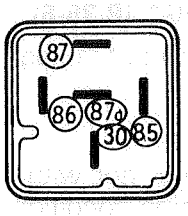

16R0670

2. Check whether there is continuity between terminals when there is no current flow at each relay and when there is current flow.

MOTOR RELAY

When no current flows	Between terminals 85–86	30–60 Ω
	Between terminals 30–87	No continuity (∞ Ω)
When current flows between terminal 85–86	Between terminals 30–87	Continuity (approx. 0 Ω)

VALVE RELAY

When no current flows	Between terminals 85–86	60–120 Ω
	Between terminals 30–87a	Continuity (approx. 0 Ω)
	Between terminals 30–87	No continuity (∞ Ω)
When current flows between terminal 85–86	Between terminals 30–87a	No continuity (∞ Ω)
	Between terminals 30–87	Continuity (approx. 0 Ω)

BRAKE PEDAL

REMOVAL AND INSTALLATION

Post-installation Operation
- Adjustment of Brake Pedal (Refer to P.35–39.)
- Shift Lock Cable Adjustment (Refer to GROUP 23–Transmission Control)

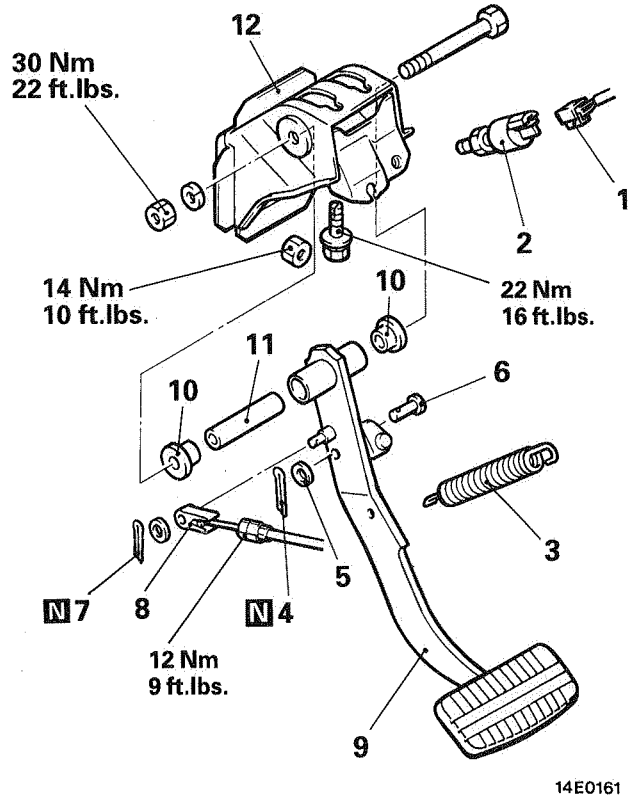

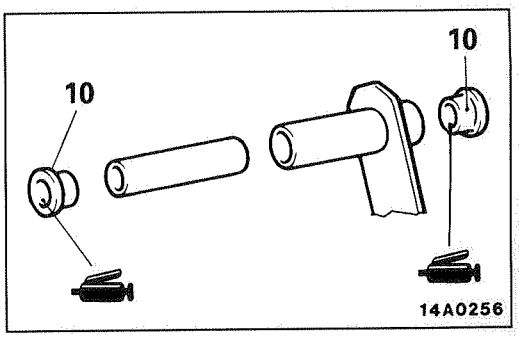

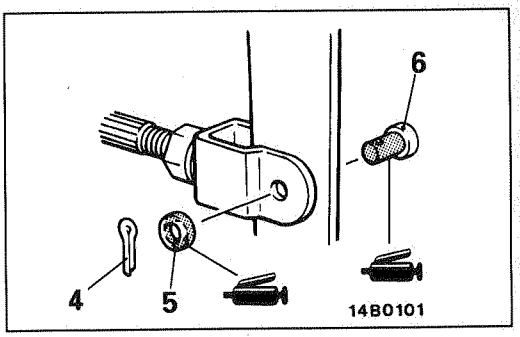

Removal steps of stop light switch

1. Stop light switch connector
2. Stop light switch

Removal steps of brake pedal

3. Return spring
4. Cotter pin
5. Washer
6. Clevis pin
7. Cotter pin
8. Shift lock cable connection
9. Brake pedal
10. Bushing
11. Spacer
12. Pedal support member

Removal steps of pedal support member

2. Stop light switch
9. Brake pedal
12. Pedal support member

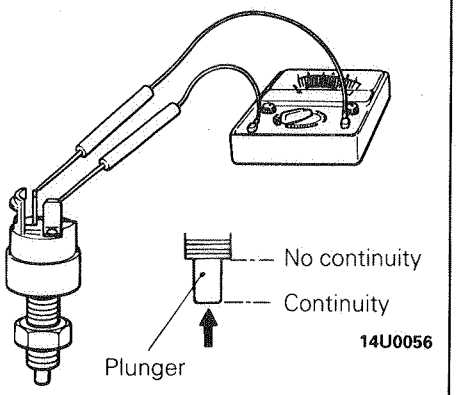

<Vehicles with auto-cruise control system>

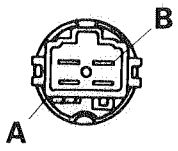

INSPECTION

M35GCAK

- Check the bushing for wear.
- Check the brake pedal for bend or twisting.
- Check the brake pedal return spring for damage.

STOP LIGHT SWITCH

The stop light switch is in good condition if there is no continuity when the plunger is pressed in, and if there is continuity when the plunger is released outward.
For models equipped with auto-cruise control system, check for continuity at stop light switch connectors A and B.

MASTER CYLINDER AND BRAKE BOOSTER

REMOVAL AND INSTALLATION

M35JA--

Pre-removal Operation
- Draining of Brake Fluid

Post-installation Operation
- Supplying of Brake Fluid and Bleeding of Air (Refer to P.35–42.)
- Adjustment of Brake Pedal (Refer to P.35–39.)

Brake pipe flare nut

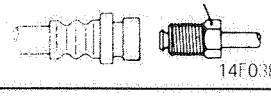

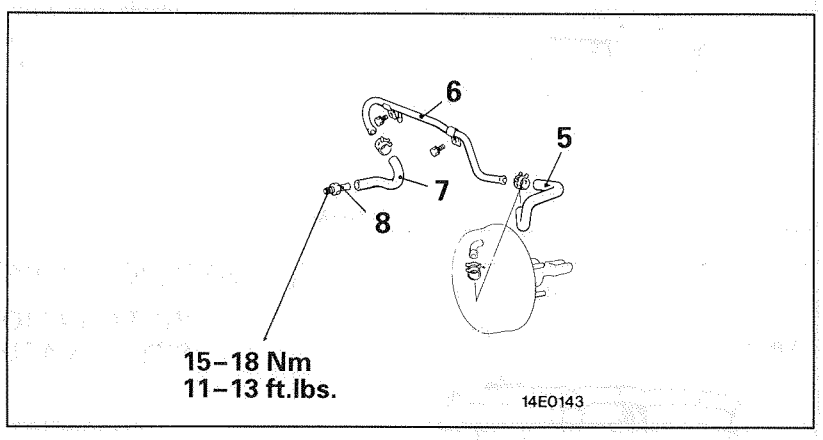

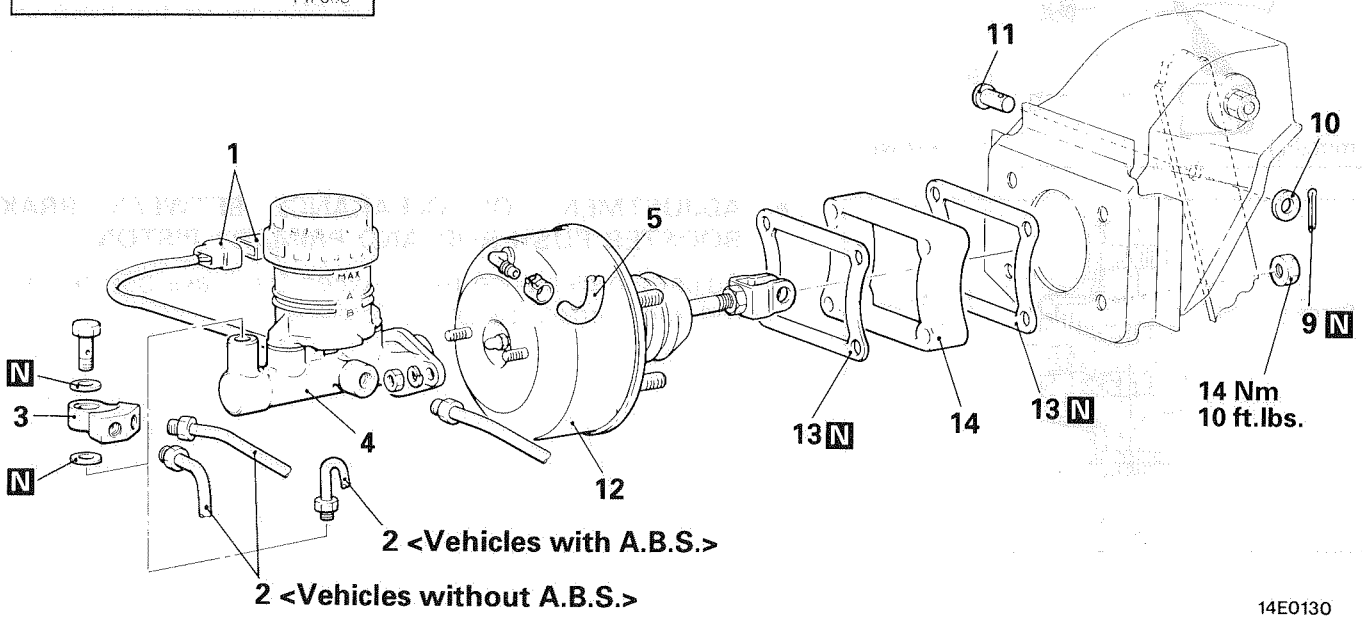

Removal steps of master cylinder

1. Brake fluid level sensor connector
2. Brake pipe
3. Connector <Vehicles without ABS>
4. Master cylinder

◆◆ • Clearance check and adjustment between primary piston and push rod

Removal steps of brake booster

4. Master cylinder

◆◆ ◆◆ 5. Vacuum hose (with built-in check valve)

◆◆ 6. Vacuum pipe

◆◆ 7. Vacuum hose

8. Fitting
9. Cotter pin
10. Washer
11. Clevis pin
12. Brake booster
13. Spacer
14. Sealant

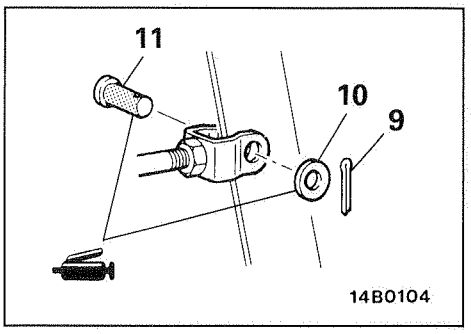

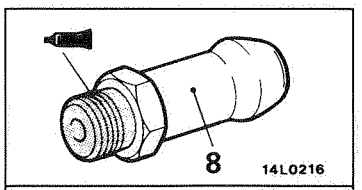

Sealant: 3M ATD Part No. 8663, 8661 or equivalent

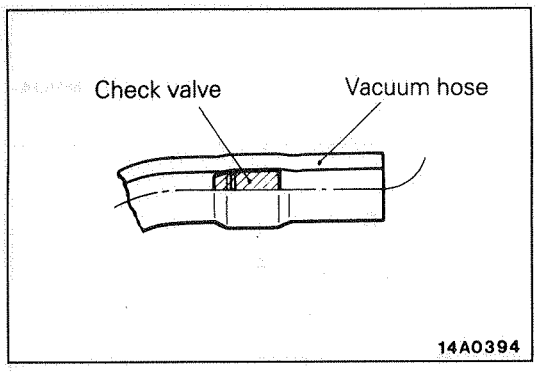

SERVICE POINTS OF REMOVAL M35JBAM

5. REMOVAL OF VACUUM HOSES WITH CHECK VALVE

NOTE
Since the check valve is fit to the vacuum hose, replace the check valve as an assembly unit together with the vacuum hose if the check valve is defective.

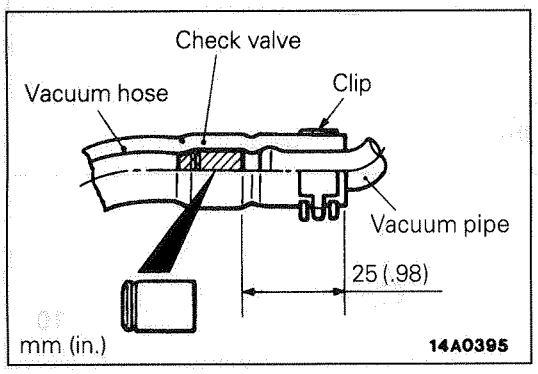

SERVICE POINTS OF INSTALLATION M35JDAU

7. INSTALLATION OF VACUUM HOSE/6. VACUUM PIPE/5. VACUUM HOSE WITH CHECK VALVE

(1) The vacuum hose at the engine should be securely connected until it contacts the hexagonal edge of the fitting, and then should be secured by the hose clip.
(2) Attach the vacuum hose so that it may be inserted to a dimension illustrated.

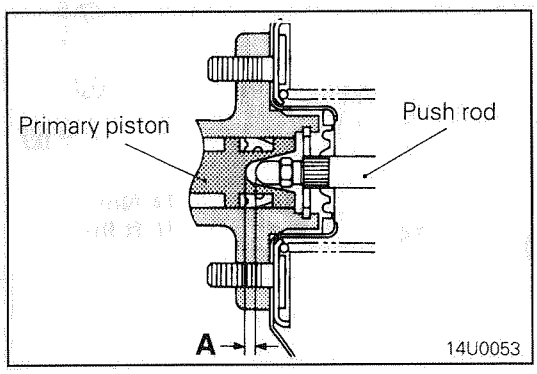

- **ADJUSTMENT OF CLEARANCE BETWEEN BRAKE BOOSTER PUSH ROD AND PRIMARY PISTON**

Adjust the clearance (A) between the brake booster push rod and primary piston as follows:

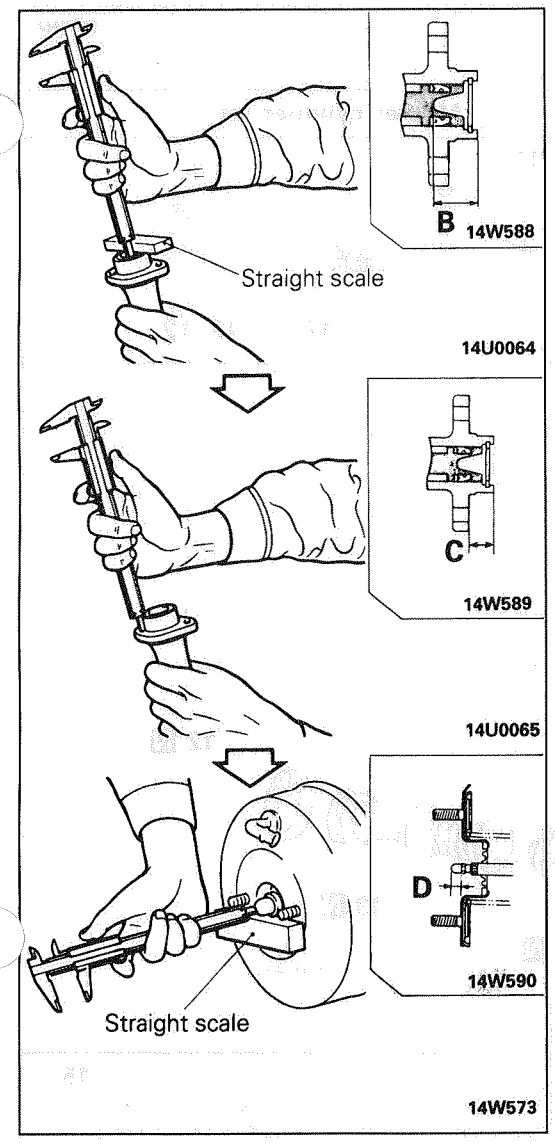

Calculate clearance A from the B, C and D measurements.

A = B–C–D

Standard value: 0.65–0.90 mm (.026–.035 in.)

NOTE
When brake booster negative pressure (–93.3 kPa [700 mmHg, 27.6 in.Hg] is applied, clearance value will become 0.05–0.30 mm (.0020–.012 in.).

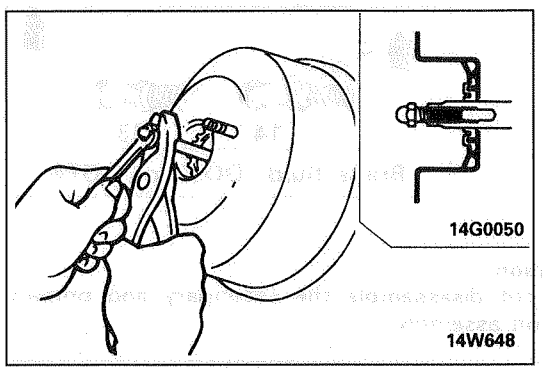

If the clearance is not within the standard value range, adjust by changing the push rod length by turning the screw of the push rod.

DISASSEMBLY AND REASSEMBLY

M35HA--

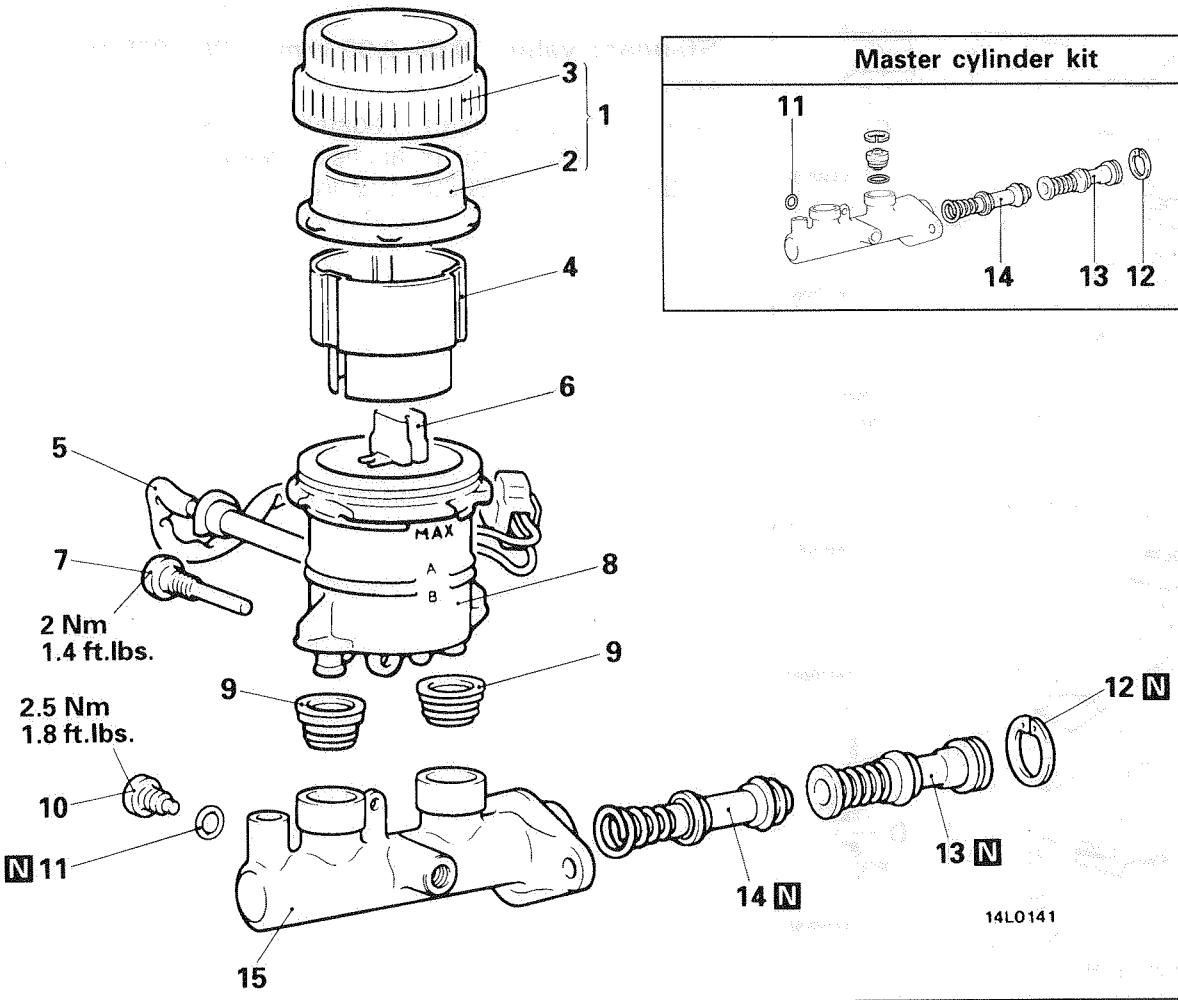

Disassembly steps

1. Reservoir cap assembly
2. Diaphragm
3. Reservoir cap
4. Filter <Vehicles with ABS>
5. Brake fluid level sensor
6. Float
7. Reservoir stopper bolt
8. Reservoir tank
9. Reservoir seal
10. ⇔ Piston stopper bolt
11. Gasket
12. ⇔ Stopper ring
13. Primary piston assembly
14. Secondary piston assembly
15. Master cylinder body

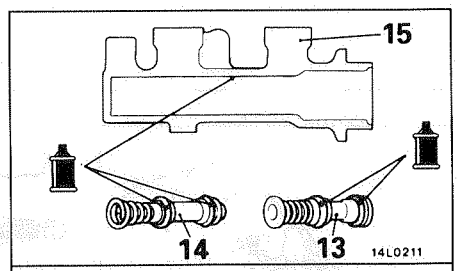

Caution
Do not disassemble the secondary and primary piston assembly.

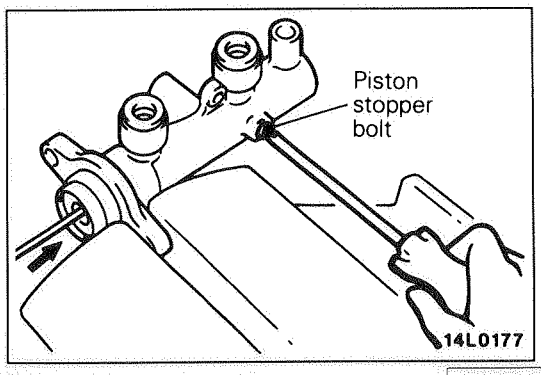

SERVICE POINTS OF DISASSEMBLY

M35HBAG

10. REMOVAL OF PISTON STOPPER BOLT

Remove the piston stopper bolt, while depressing the piston.

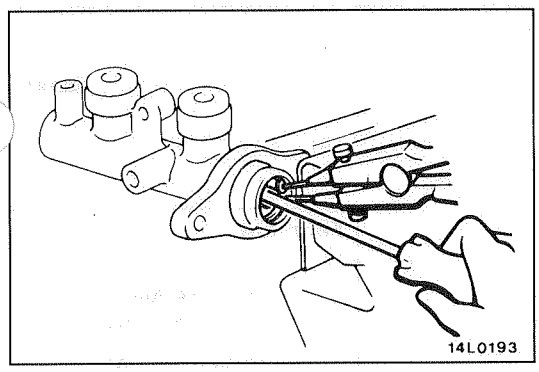

12. REMOVAL OF STOPPER RING

Remove the piston stopper ring, while depressing the piston.

BRAKE LINE

REMOVAL AND INSTALLATION

M35KA--

<Vehicles without ABS>

Pre-removal Operation
- Draining of Brake Fluid

Post-installation Operation
- Supplying of Brake Fluid
- Bleeding (Refer to P.35–42.)

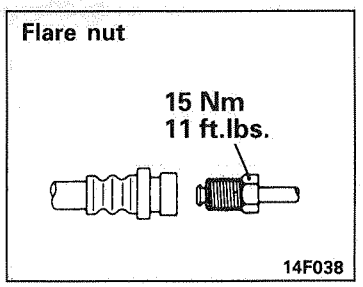

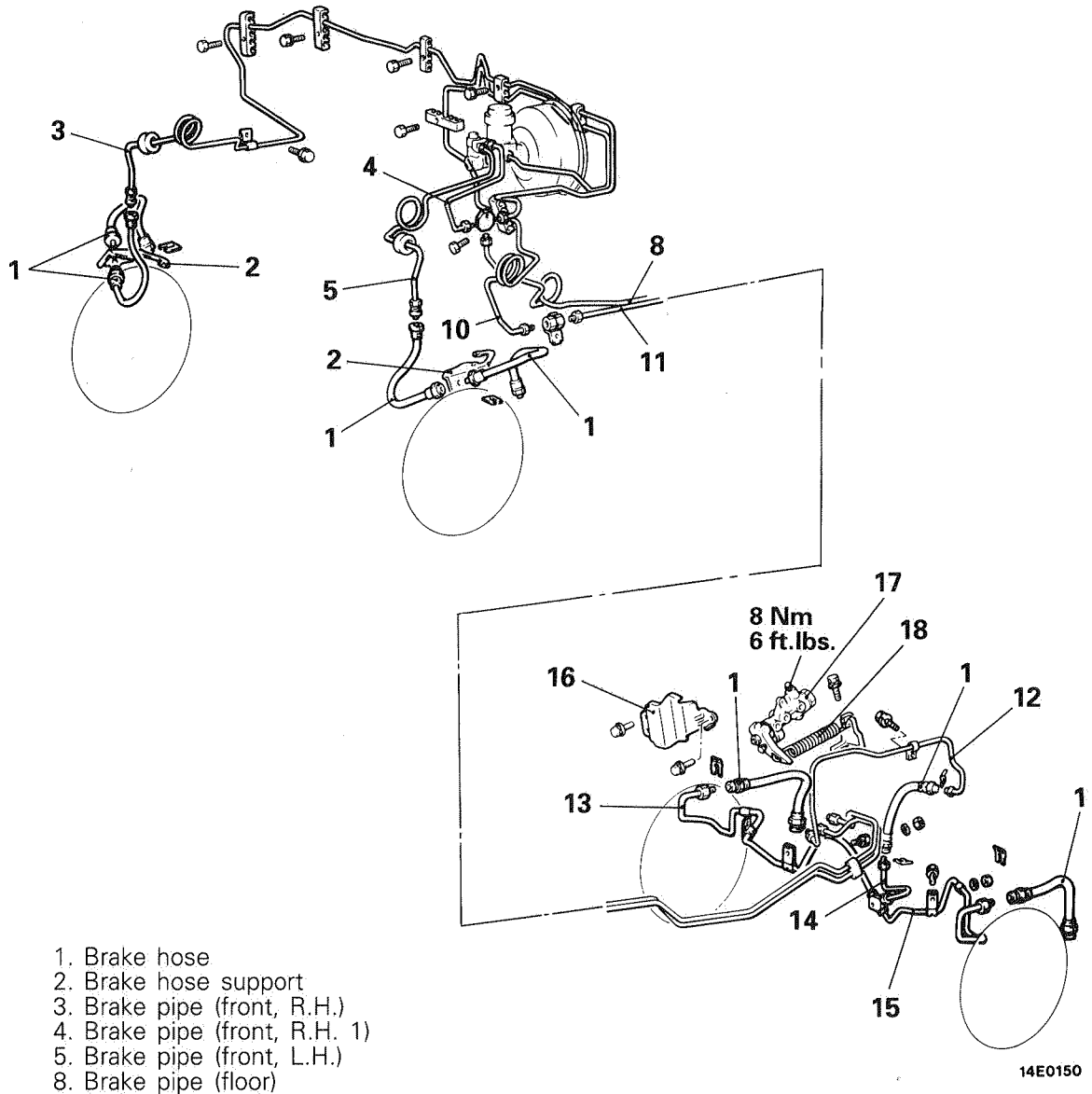

1. Brake hose
2. Brake hose support
3. Brake pipe (front, R.H.)
4. Brake pipe (front, R.H. 1)
5. Brake pipe (front, L.H.)
8. Brake pipe (floor)
10. Brake pipe (main 1)
11. Brake pipe (main 2)
12. Brake pipe (main 3)
13. Brake pipe (rear, R.H.)
14. Brake pipe (rear, center)
15. Brake pipe (rear, L.H.)
16. Protector
17. Load sensing proportioning valve
18. Load sensing spring

Caution
Do not disassemble the load sensing proportioning valve because its performance depends on the load of the spring.

<Vehicles with ABS>

Pre-removal Operation
- Draining of Brake Fluid

Post-installation Operation
- Supplying of Brake Fluid
- Bleeding (Refer to P.35–42.)

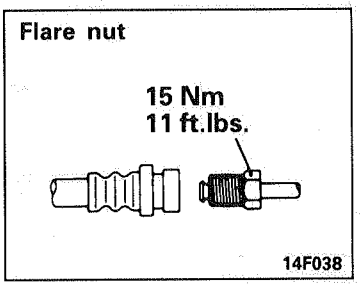

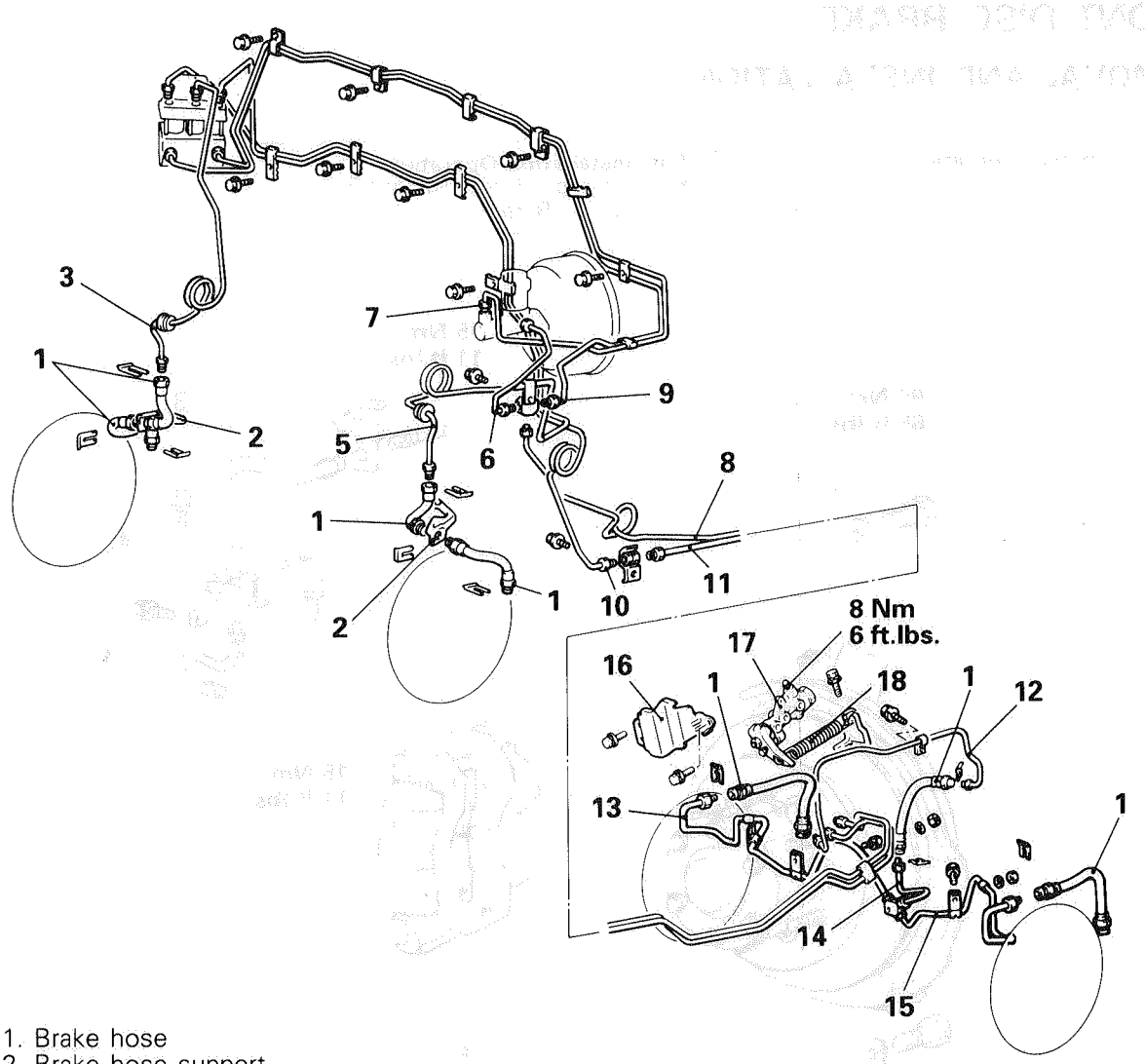

1. Brake hose
2. Brake hose support
3. Brake pipe (front, R.H.)
5. Brake pipe (front, L.H.)
6. Brake pipe (A)
7. Brake pipe (B)
8. Brake pipe (floor)
9. Brake pipe (floor 1)
10. Brake pipe (main 1)
11. Brake pipe (main 2)
12. Brake pipe (main 3)
13. Brake pipe (rear, R.H.)
14. Brake pipe (rear, center)
15. Brake pipe (rear, L.H.)
16. Protector
17. Load sensing proportioning valve
18. Load sensing spring

Caution
Do not disassemble the load sensing proportioning valve because its performance depends on the set load of the spring.

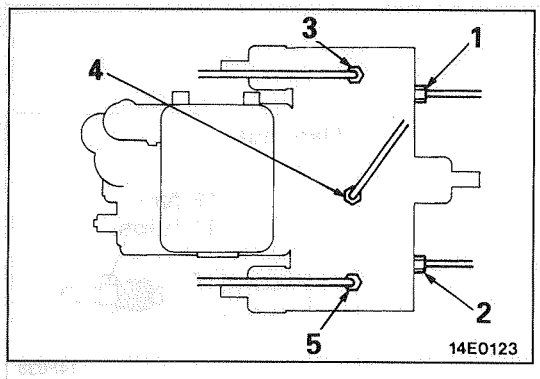

SERVICE POINTS OF INSTALLATION M35KDAL

INSTALLATION OF BRAKE PIPES TO HYDRAULIC UNIT

Install the brake pipes as shown in the illustration.
1. From master cylinder (front) to hydraulic unit
2. From master cylinder (rear) to hydraulic unit
3. From hydraulic unit to front brake (LH)
4. From hydraulic unit to front brake (RH)
5. From hydraulic unit to rear brake

FRONT DISC BRAKE

REMOVAL AND INSTALLATION M35LA--

Pre-Removal Operation
- Draining of Brake Fluid

Post-installation Operation
- Supplying of Brake Fluid and Bleeding of Air (Refer to P.35–42.)

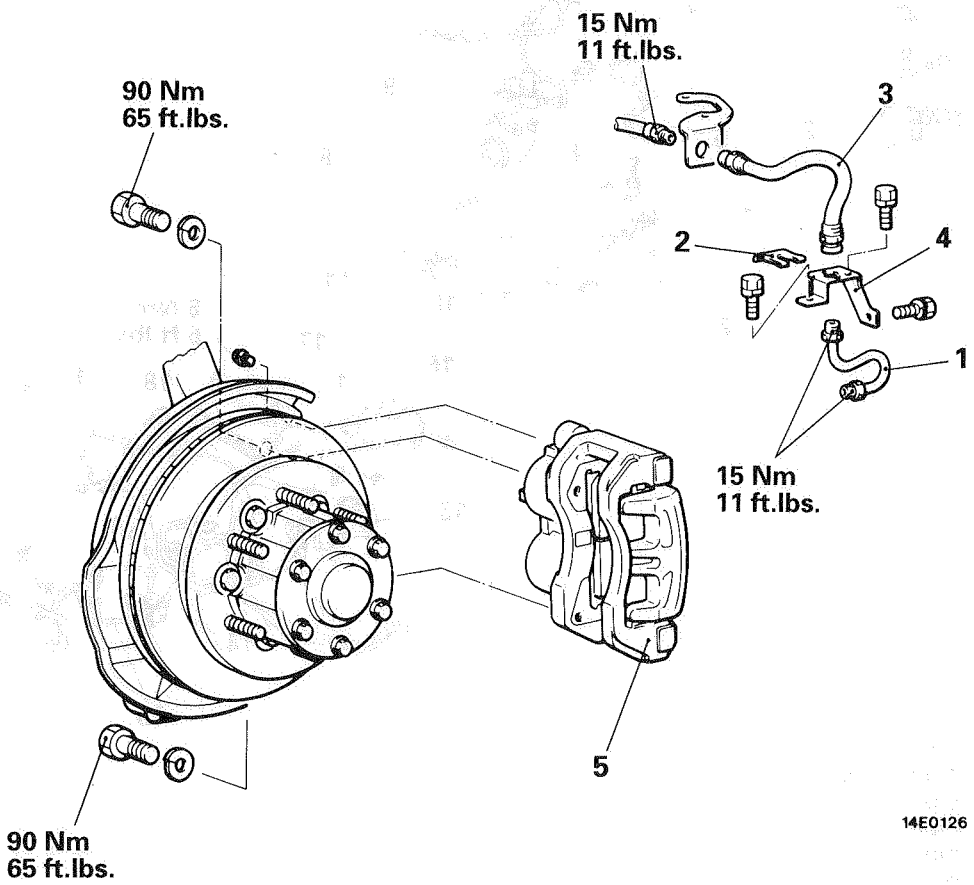

Removal steps
1. Brake pipe
2. Clip
3. Brake hose
4. Brake hose bracket
- ◆◆ 5. Front brake assembly

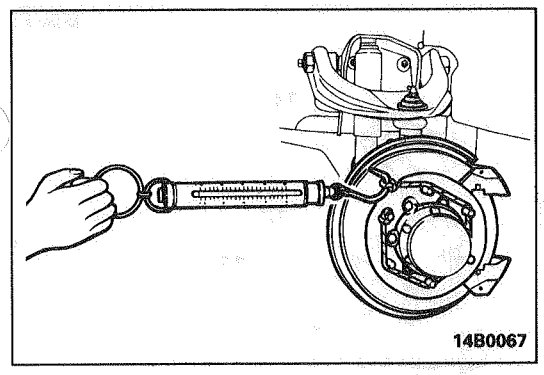

SERVICE POINTS OF INSTALLATION M35LDAK

5. INSTALLATION OF FRONT BRAKE ASSEMBLY

After installation of the brake assembly, measure the dragging force of the disc brakes by the following procedure.

(1) With the brake assembly removed, use a spring balance to measure the rotational sliding resistance of the hub in the forward direction.

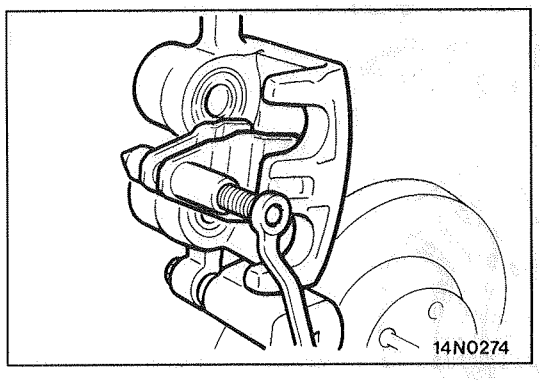

(2) After installing the caliper support to the knuckle, use a piston expander to expand the piston, and then install the caliper body.

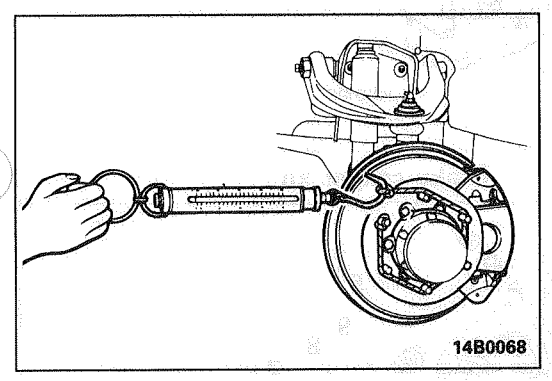

(3) Start the engine and, after strongly depressing the brake pedal 2-3 times, stop the engine.

(4) Turn brake disc forward 10 times.

(5) Use a spring balance to measure the rotational sliding resistance of the hub in the forward direction.

(6) Calculate the dragging force of the disc brakes [the difference between the values measured in steps (5) and (1)].

Standard value: 57N (13 lbs.) or less

(7) If the dragging force exceeds the standard value, disassemble piston and clean the piston. Check for corrosion or worn piston seal.

DISASSEMBLY AND REASSEMBLY

M35LE--

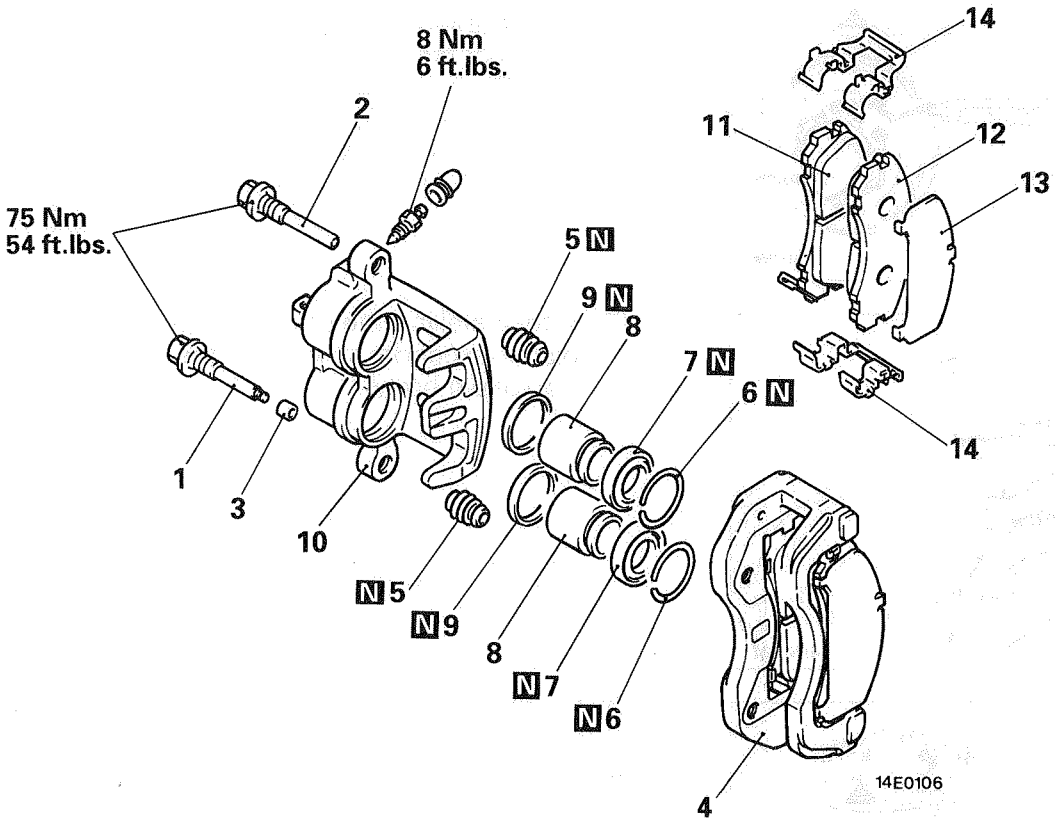

Disassembly steps of caliper assembly

- ◆◆ 1. Lock pin
- ◆◆ 2. Guide pin
- 3. Bushing
- 4. Caliper support (Pad, clip and shim)
- 5. Pin boot
- 6. Boot ring
- ◆◆ 7. Piston boot
- ◆◆ 8. Piston
- ◆◆ 9. Piston seal
- 10. Caliper body

Disassembly steps of pad assembly

- ◆◆ 1. Lock pin
- ◆◆ 2. Guide pin
- 3. Bushing
- 4. Caliper support (Pad, clip and shim)
- 11. Pad and wear indicator assembly
- 12. Pad assembly
- 13. Outer shim
- 14. Clip

Brake caliper kit

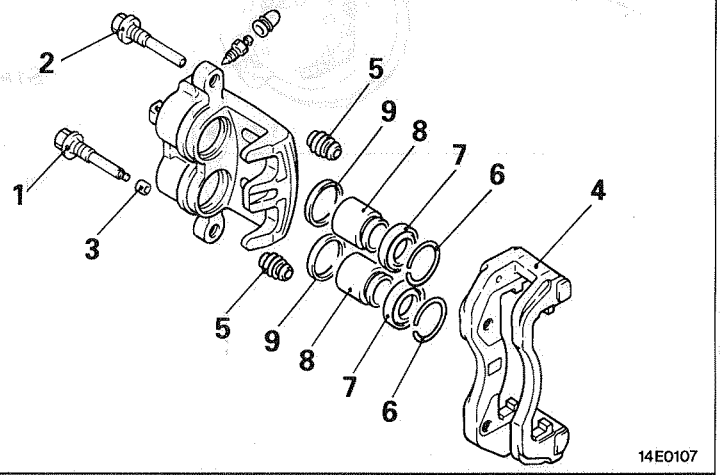

Pad kit

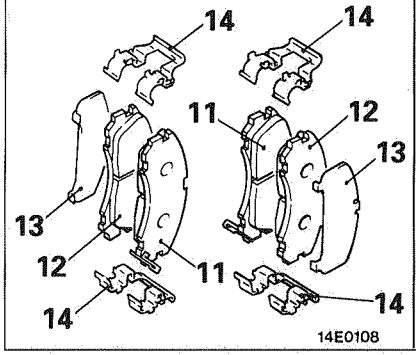

Seal and boot kit

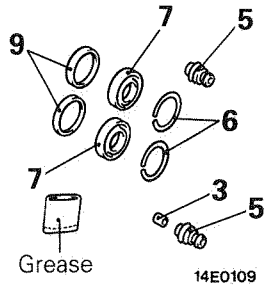

LUBRICATION POINTS

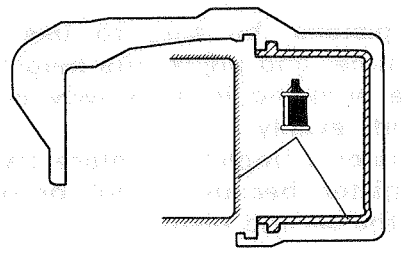

14E0131

Caution
Special grease has been applied to the inside of the seal and boot kit, so this grease should not be wiped off.

Brake fluid: DOT3 or DOT4

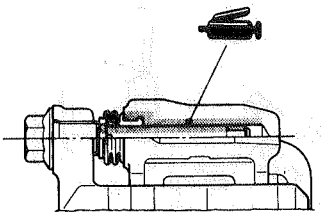

14A0541

Grease: Repair kit grease (orange)

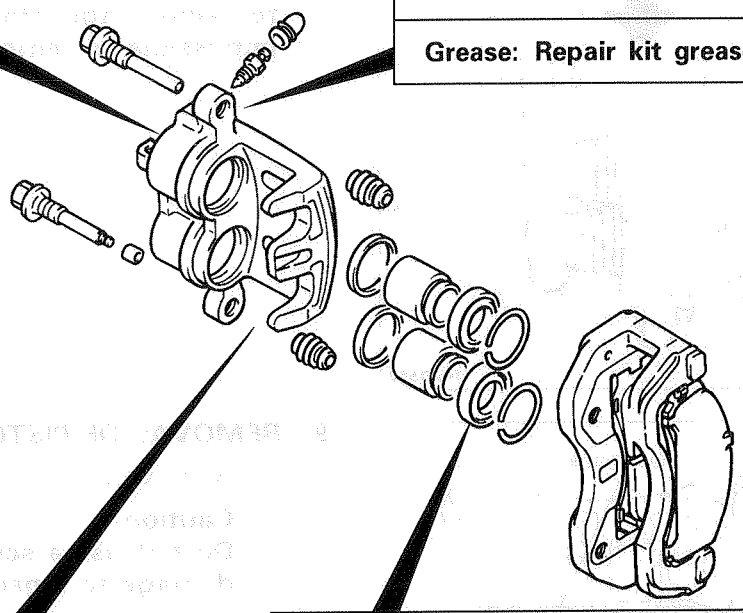

14E0106

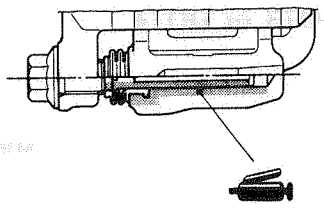

14A0541

Grease: Repair kit grease (orange)

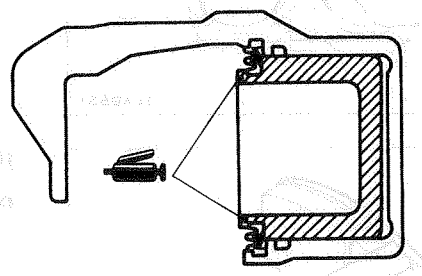

14L0128

Grease: Repair kit grease (orange)

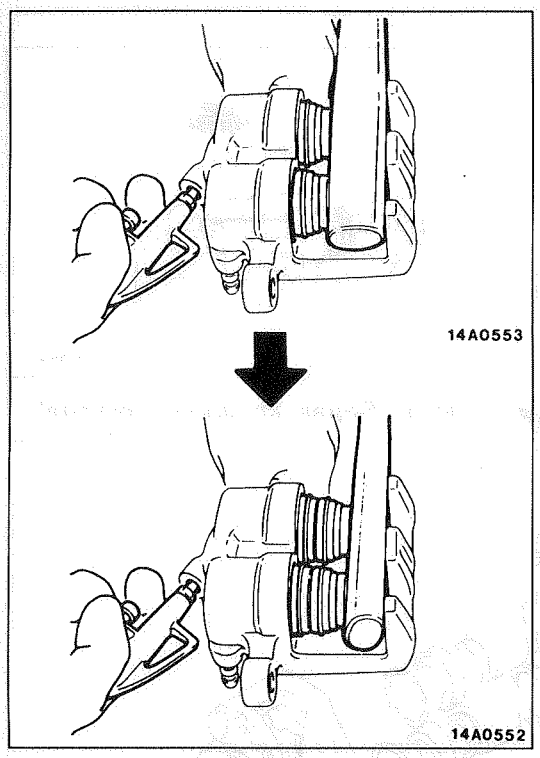

SERVICE POINTS OF DISASSEMBLY M35LFAN

7. REMOVAL OF PISTON BOOT/8. PISTON

Pump in compressed air through the brake hose installation hole and remove the pistons and piston boot.

Caution
When removing the pistons, be sure to use the handle of a plastic hammer and adjust the height of the two pistons while pumping in air slowly in so that the pistons protrude evenly.
Do not remove one piston completely before trying to remove the other piston because it will become impossible to remove the second piston.

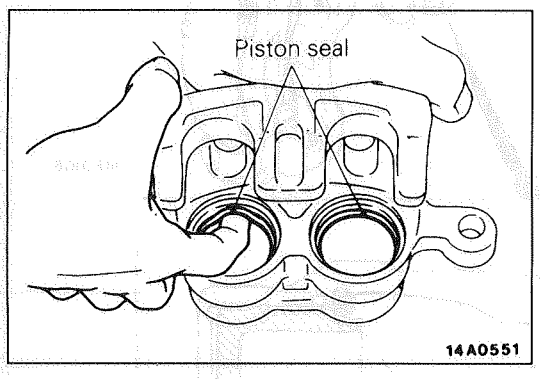

9. REMOVAL OF PISTON SEAL

(1) Remove piston seal with finger tip.

Caution
Do not use a screwdriver or other tool to prevent damage to inner cylinder.

(2) Clean piston surface and inner cylinder with trichloroethylene alcohol or specified brake fluid.

Specified brake fluid: DOT3 or DOT4

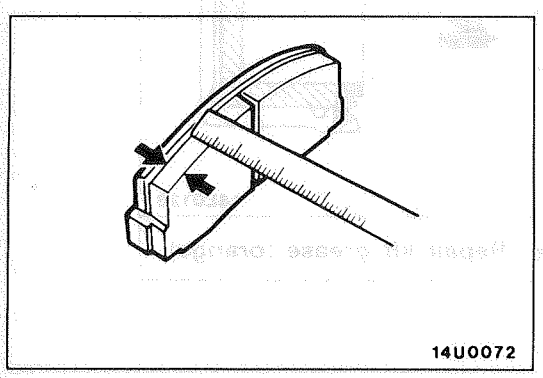

INSPECTION M35LGAJ

PAD WEAR

Measure thickness at the thinnest and worn area of the pad. Replace pad assembly when pad thickness is less than the limit value.

Standard value:	**10.0 mm (.39 in.)**
Limit:	**2.0 mm (.079 in.)**

Caution
1. **When the limit it exceeded, replace the pads at both sides, and also the brake pads for the wheels on the opposite side at the same time.**
2. **If there is a significant difference in the thicknesses of the pads on the left and right sides, check the sliding parts.**

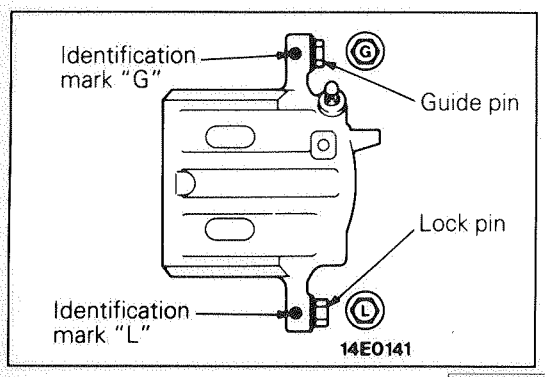

SERVICE POINTS OF INSTALLATION M35LHAT

2. INSTALLATION OF GUIDE PIN/1. LOCK PIN

Install the guide pin and lock pin as illustrated so that each head mark of the guide pin and the lock pin matches the indication mark ("G" or "L") located on the caliper body.

REAR DISC BRAKE

REMOVAL AND INSTALLATION

M35MA--

Pre-removal Operation
- Draining of Brake Fluid

Post-installation Operation
- Supplying of Brake Fluid
- Bleeding
(Refer to P.35–42.)

Flare nut

15 Nm
11 ft.lbs.

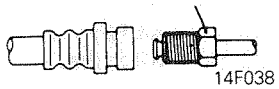

14F038

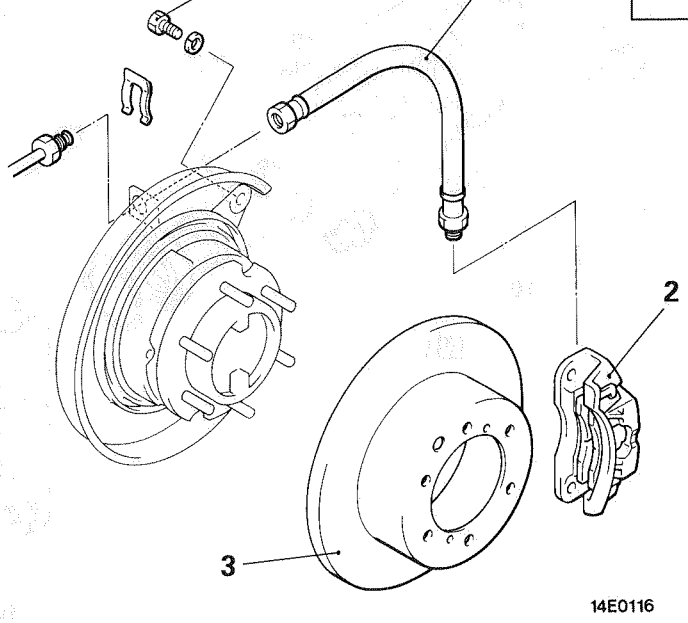

14E0116

Removal steps

1. Brake hose connection
2. Rear brake assembly
3. Brake disc

INSPECTION

M35MDAD

BRAKE DISC

- Check disc for wear. (Refer to P.35–47.)
- Check disc for runout. (Refer to P.35–47.)
- Check disc for damage.

SERVICE POINTS OF INSTALLATION

M35MCAH

2. INSTALLATION OF THE REAR BRAKE ASSEMBLY

Install the rear brake assembly using the same procedure at that for the front brake assembly. (Refer to P.35–65.)

DISASSEMBLY AND REASSEMBLY

M35NA--

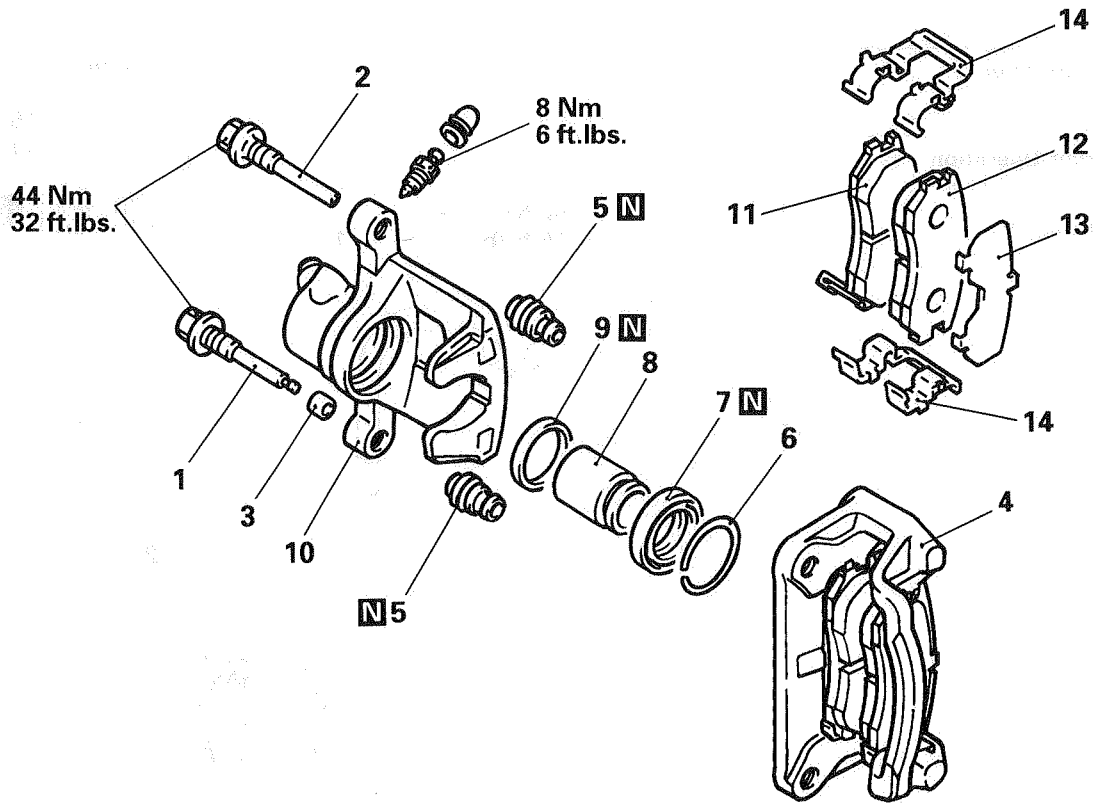

14E0110

Brake caliper kit

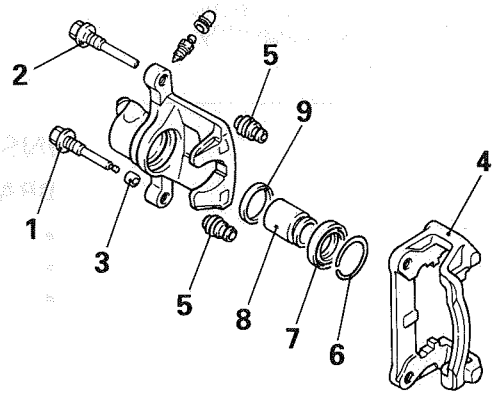

14E0111

Pad kit

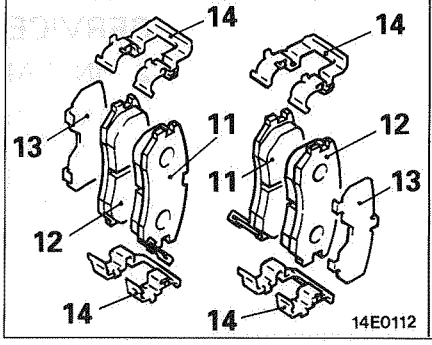

14E0112

Seal and boot repair kit

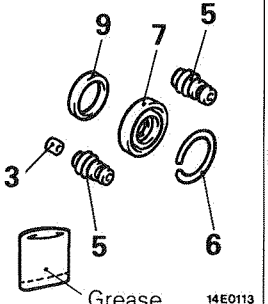

14E0113

Disassembly steps of caliper assembly

- ◆◆ 1. Lock pin
- ◆◆ 2. Guide pin
- 3. Bushing
- 4. Caliper support (Pad, clip and shim)
- 5. Pin boot
- 6. Boot ring
- ◆◆ 7. Piston boot
- ◆◆ 8. Piston
- ◆◆ 9. Piston seal
- 10. Caliper body

Disassembly steps of pad assembly

- ◆◆ 1. Lock pin
- ◆◆ 2. Guide pin
- 3. Bushing
- 4. Caliper support (Pad, clip and shim)
- 11. Pad and wear indicator assembly
- 12. Pad assembly
- 13. Outer shim
- 14. Clip

LUBRICATION POINTS

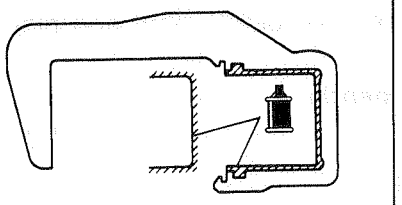

14E0121

Caution
Special grease has been applied to the inside of the seal and boot kit, so this grease should not be wiped off.

Brake fluid: DOT3 or DOT4

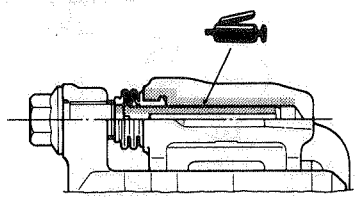

14N0121

Grease: Repair kit grease (orange)

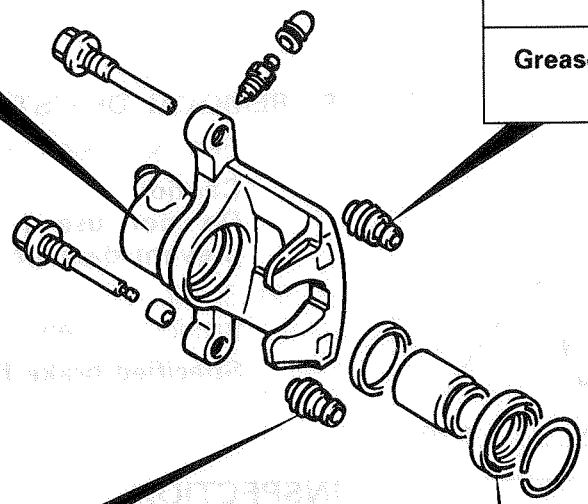

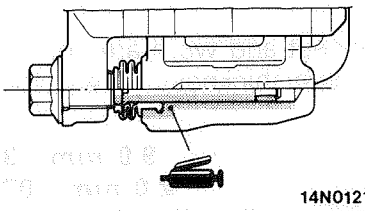

14N0121

Grease: Repair kit grease (orange)

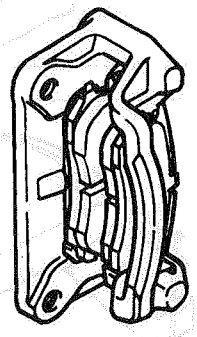

14E0110

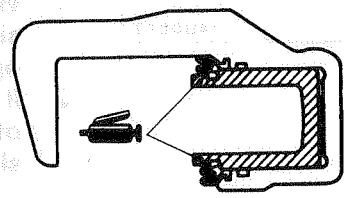

14L0126

Grease: Repair kit grease (orange)

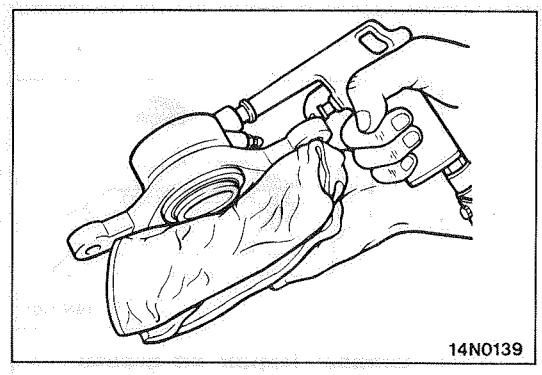

SERVICE POINTS OF DISASSEMBLY M35NBAG

7. REMOVAL OF PISTON BOOT/8. PISTON

Protect caliper body with cloth. Blow compressed air through brake hose to remove piston boot and piston.

Caution
Blow compressed air gently.

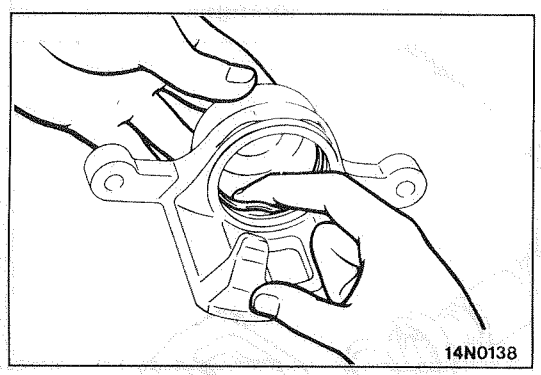

9. REMOVAL OF PISTON SEAL

(1) Remove piston seal with finger tip.

Caution
Do not use (–) screwdriver or other tool to prevent damage to inner cylinder.

(2) Clean piston surface and inner cylinder with trichloroethylene, alcohol or specified brake fluid.

Specified brake fluid: DOT3 or DOT4

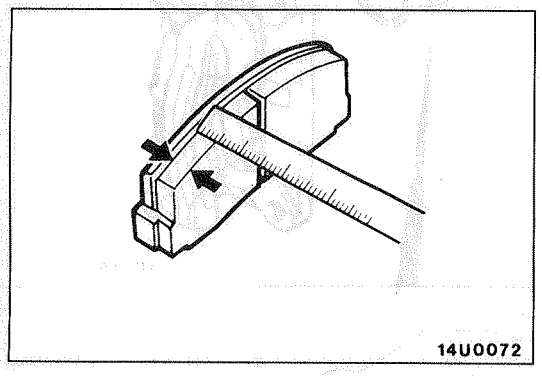

INSPECTION M35NCAC

PAD WEAR

Measure thickness at the thinnest and worn area of the pad. Replace pad assembly when pad thickness is less than the limit value.

Standard value:	**9.0 mm (.35 in.)**
Limit:	**2.0 mm (.079 in.)**

Caution

1. **When the limit is exceeded, replace the pads at both sides, and also the brake pads for the wheels on the opposite side at the same time.**
2. **If there is a significant difference in the thicknesses of the pads on the left and right sides, check the sliding parts.**

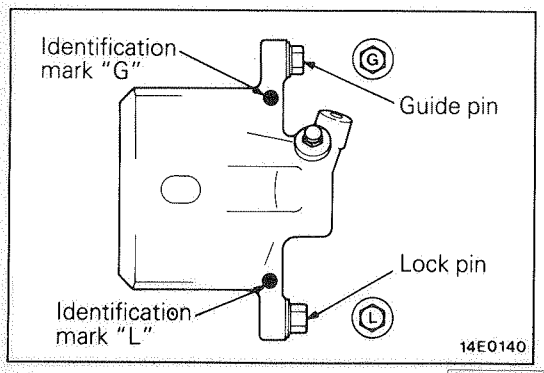

SERVICE POINTS OF REASSEMBLY M35NDAJ

2. INSTALLATION OF GUIDE PIN/1. LOCK PIN

Install the guide pin and lock pin as illustrated so that each head mark of the guide pin and the lock pin matches the indication mark ("G" or "L") located on the caliper body.

HYDRAULIC UNIT <A.B.S.>

M35OXAG

REMOVAL AND INSTALLATION

Flare nut

15 Nm
11 ft.lbs.

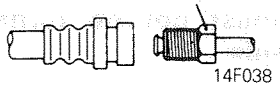

14F038

Pre-removal Operation
- Draining of Brake Fluid

Post-installation Operation
- Supplying of Brake Fluid
- Bleeding Brake Lines (Refer to P.35–42.)
- Checking by Using the Multi–use Tester (Refer to P.35–51.)

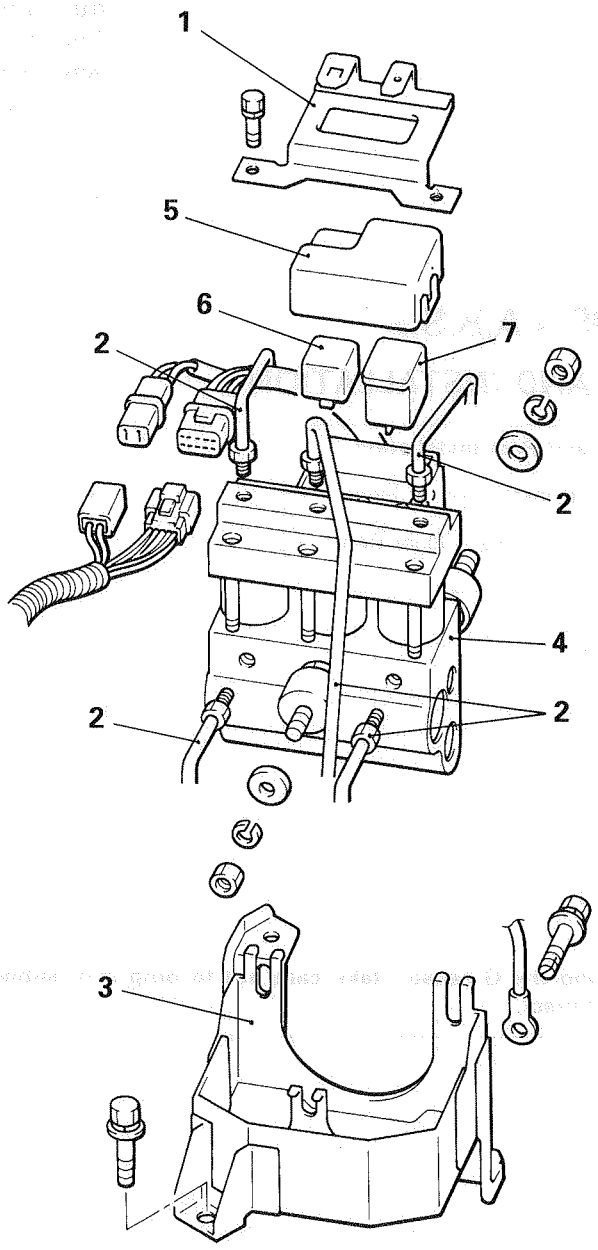

14E0068

Removal steps of relay

1. Connector bracket
5. Relay box cover
6. Valve relay
7. Motor relay

Removal steps of hydraulic unit

1. Connector bracket
2. Brake pipe
3. Hydraulic unit bracket
4. Hydraulic unit
5. Relay box cover
6. Valve relay
7. Motor relay

SERVICE POINTS OF REMOVAL

4. REMOVAL OF THE HYDRAULIC UNIT

Caution

1. **The hydraulic unit is heavy, and so care should be taken when removing it.**
2. **The hydraulic unit is not to be disassembled; its nuts and bolts should absolutely not be loosened.**
3. **The hydraulic unit must not be dropped or otherwise subjected to impact shocks.**
4. **The hydraulic unit must not be turned upside down or laid on its side.**

G-SENSOR <A.B.S.>

M35OVAC

REMOVAL AND INSTALLATION

Pre-removal and Post-installation Operation
- Removal and Installation of Floor Console
  (Refer to GROUP 52 – Floor Console.)

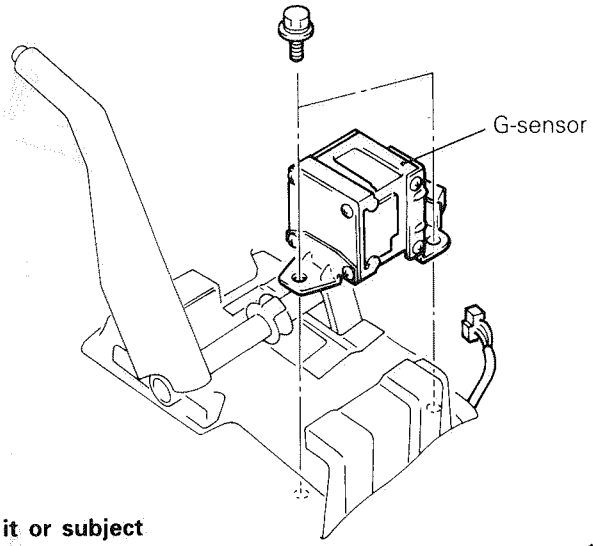

14E0062

Caution
When removing the G sensor, take care not to drop it or subject it to severe impact.

WHEEL SPEED SENSOR <A.B.S.>

M35OYAJ

REMOVAL AND INSTALLATION

Post-installation Operation
- Checking of the Anti-lock Braking System (Refer to P.35–49.)

Front-RH

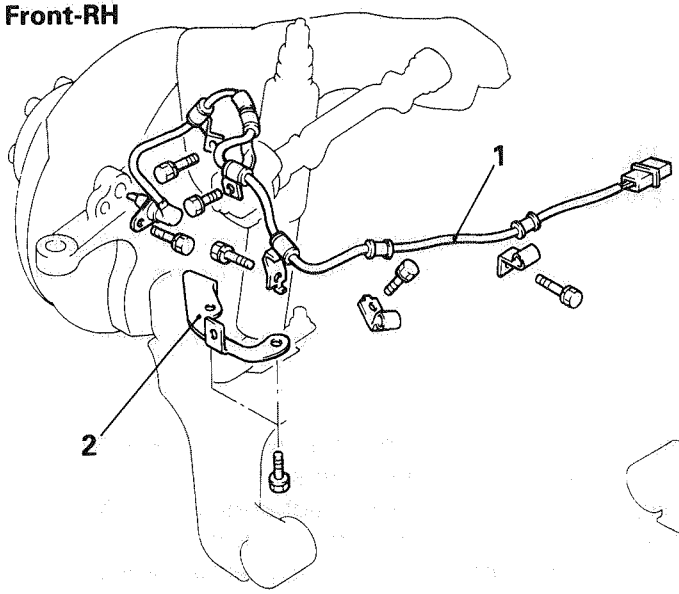

Front-LH

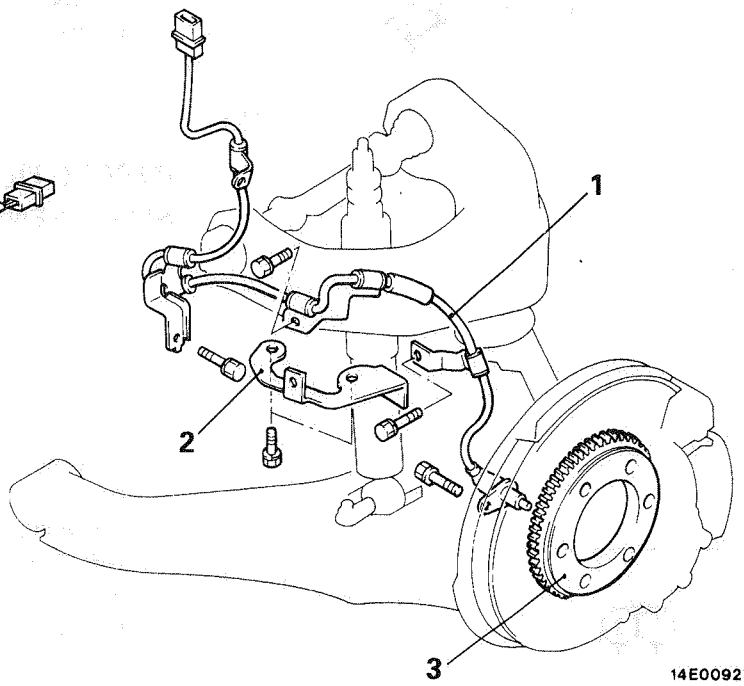

14E0092

Front speed sensor removal steps

◀▶ ▶◀ 1. Front speed sensor
2. Harness bracket
3. Front rotor
(Refer to GROUP 26 – Axle Hub.)

Rear

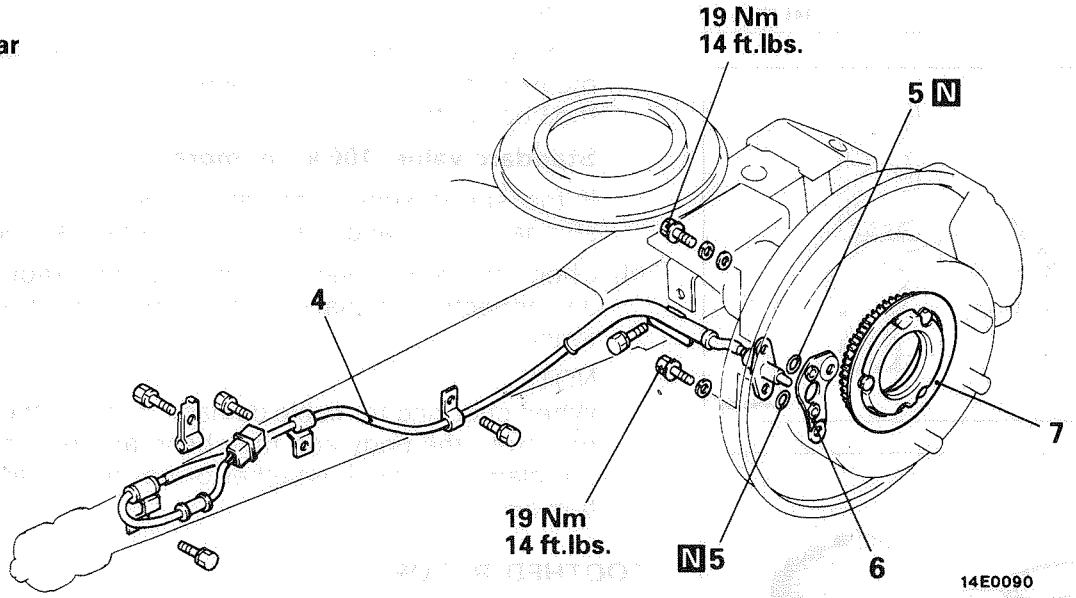

14E0090

Rear speed sensor removal steps

◀▶ ▶◀ 4. Rear speed sensor
5. Sealant
6. Sensor bracket } (Refer to
7. Rear rotor } GROUP 27 – Axle shaft.)

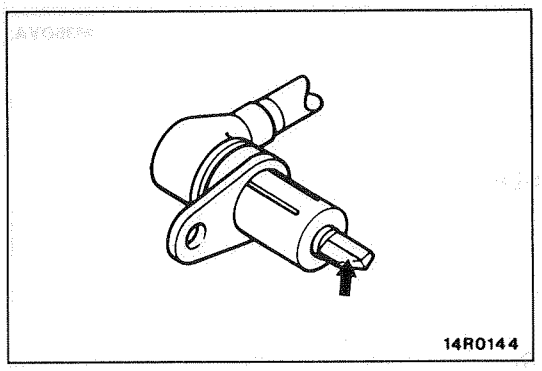
14R0144

SERVICE POINTS OF REMOVAL

1. REMOVAL OF THE FRONT SPEED SENSOR/4. REAR SPEED SENSOR

Caution
Be careful when handling the pole piece at the tip of the speed sensor and the toothed edge of the rotor so as not to damage them by striking against other parts.

INSPECTION

SPEED SENSOR

(1) Check whether any metallic foreign material has adhered to the pole piece at the speed sensor tip, and, is so, remove it.
Also check whether the pole piece is damaged, and, if so, replace it with a new one.

NOTE
The pole piece can become magnetized because of the magnet built into the speed sensor, with the result that metallic foreign material easily adheres to it. Moreover, the pole piece may not be able to function to correctly sense the wheel rotation speed if it is damaged.

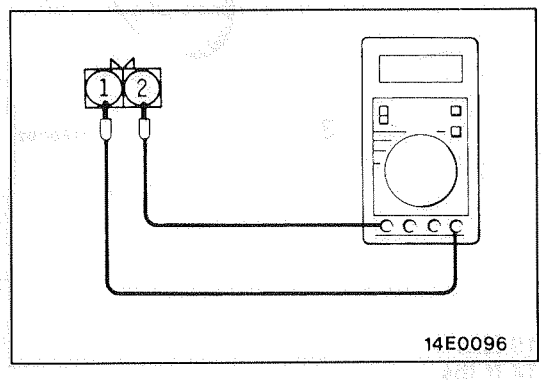

14E0096

(2) Measure the resistance between the speed sensor terminals.

Standard value:

Front:	**0.9–1.1 kΩ**
Rear:	**1.3–2.1 kΩ**

If the internal resistance of the speed sensor is not within the standard value, replace it with a new speed sensor.

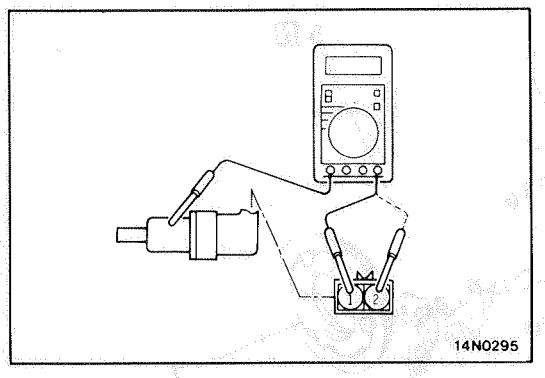

14N0295

(3) Remove all connections from the speed sensor, and then measure the resistance between terminals (1) and (2) and the body of the speed sensor.

Standard value: 100 kΩ or more

If the speed sensor insulation resistance is outside the standard value range, replace with a new speed sensor.

(4) Check the speed sensor cable for breakage, damage or disconnection; replace with a new one if a problem is found.

NOTE
When checking for cable damage, remove the cable clamp part from the body and then bend and pull the cable near the clamp to check whether or not temporary disconnection occurs.

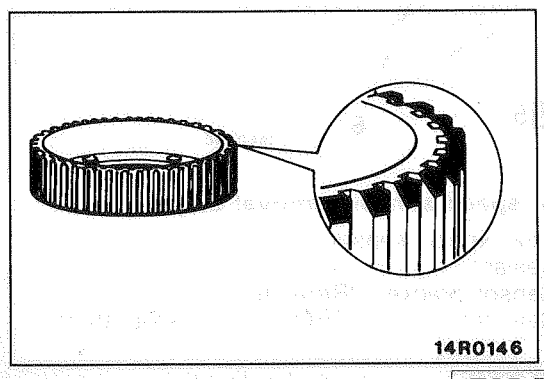
14R0146

TOOTHED ROTOR

Check whether rotor teeth are broken or deformed, and, if so, replace the rotor.

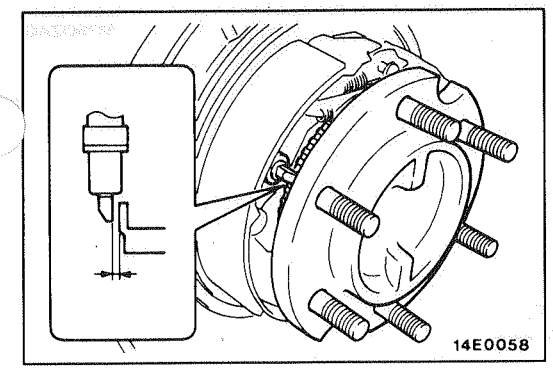

SERVICE POINTS OF INSTALLATION

4. INSTALLATION OF REAR SPEED SENSOR

Insert a feeler gage into the space between the speed sensor's pole piece and the rotor's toothed surface and then tighten the speed sensors at the position where the clearance is the standard value.

Standard value: 0.3–0.9 mm (.012–.035 in.)

NOTE
Check to be sure that there is no contact of the speed sensor's pole piece and the rotor's toothed surface when the rear hub assembly is slowly rotated one time.
If there is contact, it is probable that the rotor or the rear hub is installed incorrectly, recheck installation.

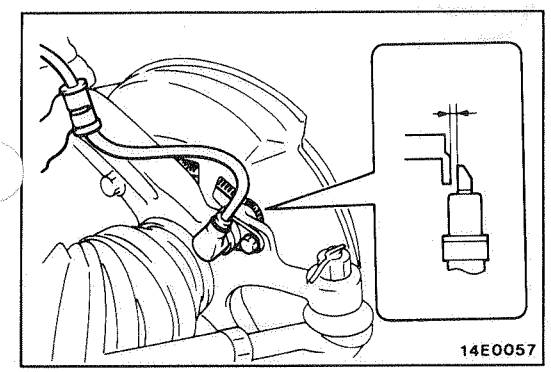

1. INSTALLATION OF FRONT SPEED SENSOR

Insert a feeler gage into the space between the speed sensor's pole piece and the rotor's toothed surface, and check that the clearance at all points is at the standard value.

Standard value: 0.2–1.0 mm (.008–.039 in.)

NOTE
If the clearance between the speed sensor's pole piece and the rotor's toothed surface is not within the standard value range, it is probable that the rotor is incorrectly installed, recheck installation.

ELECTRONIC CONTROL UNIT <A.B.S.>

M35OZAG

REMOVAL AND INSTALLATION

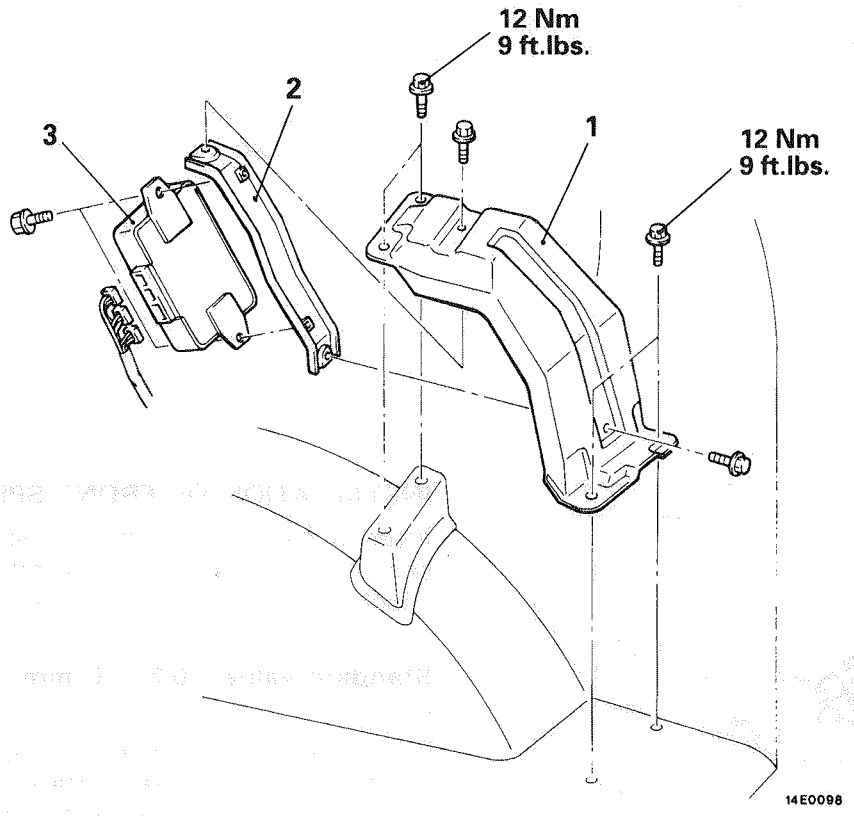

Removal steps

- Quarter trim, lower
  (Refer to GROUP 52 – Trim.)

1. Bracket (A)
2. Bracket
3. Electronic control unit

PARKING BRAKES

CONTENTS

M36AA--

PARKING BRAKE CABLE 5

PARKING BRAKE DRUM 7

PARKING BRAKE LEVER 4

SERVICE ADJUSTMENT PROCEDURES 3

- Parking Brake Lever Stroke Inspection and Adjustment 3
- Parking Brake Switch Check 3

SPECIFICATIONS 2

- Lubricants 2
- Sealant 2
- Service Specification 2

TROUBLESHOOTING 2

- Brake Drag
- Insufficient Parking Brake Function

SPECIFICATIONS

SERVICE SPECIFICATION

M36CB--

Items	Specifications
Standard value Parking brake lever stroke	4–6 notches

LUBRICANTS

M36CD--

Items	Specified lubricant
Backing plate Shoe and lining assembly Adjuster	Brake grease SAE J310, NLGI No.1

SEALANT

M36CE--

Items	Specifications
Both sides of sealer	3M ATD Part No. 8661, 8663 or equivalent
Shoe holddown pin Backing plate	3M ATD Part No. 8513 or equivalent

TROUBLESHOOTING

M36EAAL

Symptom	Probable cause	Remedy
Brake drag	Incomplete release of parking brake	Correct
	Incorrect parking brake adjustment	Adjust
Insufficient parking brake function	Worn brake lining	Replace
	Excessive parking brake lever stroke	Adjust the parking brake lever stroke or check the parking brake cable routing
	Grease or oil on lining surface	Replace
	Parking brake cable sticking	Replace

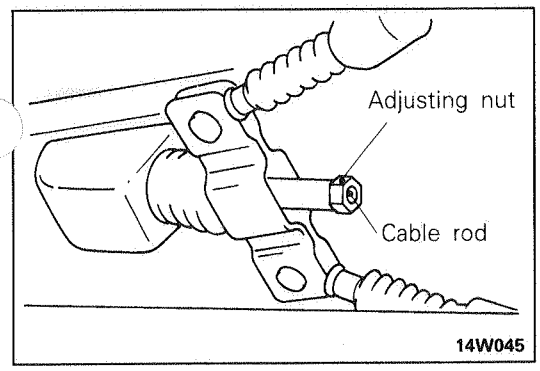

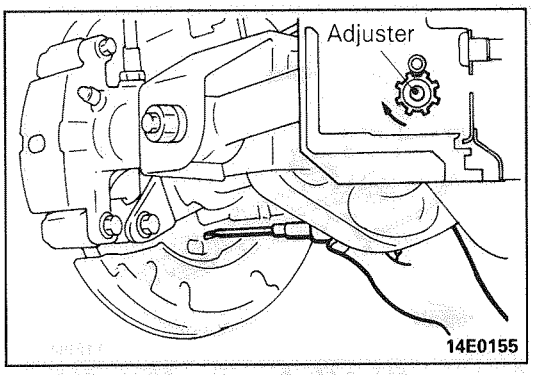

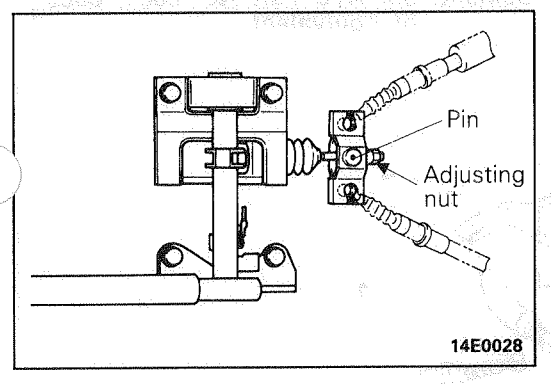

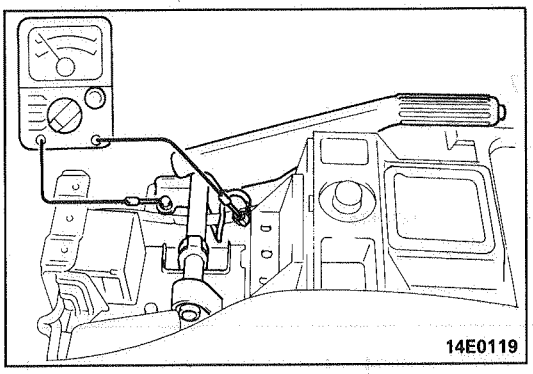

SERVICE ADJUSTMENT PROCEDURES

PARKING BRAKE LEVER STROKE INSPECTION AND ADJUSTMENT M36FEAB

Standard value: 4–6 notches

If the parking brake lever stroke is not within the standard value range, make adjustment by the following procedures.

(1) Loosen the adjuster to slacken the parking brake cable.
(2) Remove the adjustment hole plug, and then use a flat-tip (–) screwdriver to turn the adjuster in the direction of the arrow (the direction which expands the shoe) so that the disc will not rotate.
(3) Return the adjuster 3–4 notches in the direction opposite to the direction of the arrow.
(4) Turn the adjusting nut to adjust the parking brake lever stroke to within the standard value range.

Caution
If the number of brake lever notches engaged is less than the standard value, the cable has been pulled excessively. Be sure to adjust it to within the standard value.

(5) After making the adjustment, check to be sure that there is no play between the adjusting nut and the pin. Also check that the adjusting nut is securely held at the nut holder.
(6) After adjusting the lever stroke, jack up the rear of the vehicle.
(7) With the parking brake lever in the released position, turn the rear wheel to confirm that the rear brakes are not dragging.

PARKING BRAKE SWITCH CHECK M36FDAB

(1) Disconnect the connector of the parking brake switch, and connect an ohmmeter to the parking brake switch and the switch installation bolt.
(2) The parking brake switch is good if there is continuity when the parking brake lever is pulled and there is no continuity when it is returned.

PARKING BRAKE LEVER

REMOVAL AND INSTALLATION

M36WA--

Pre-removal Operation
- Removal of Floor Console Assembly (Refer to GROUP 52 – Floor Console.)

Post-installation Operation
- Adjustment of Parking Brake Lever Stroke (Refer to P.36-3.)
- Installation of Floor Console Assembly (Refer to GROUP 52 – Floor Console.)

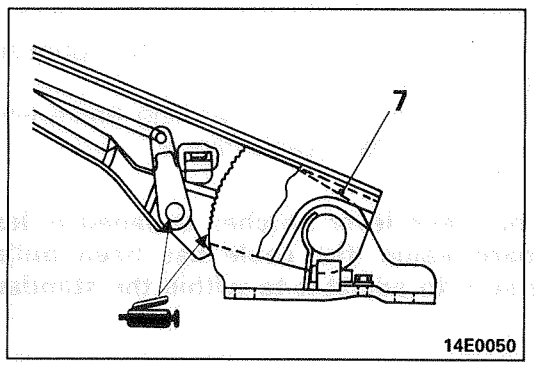

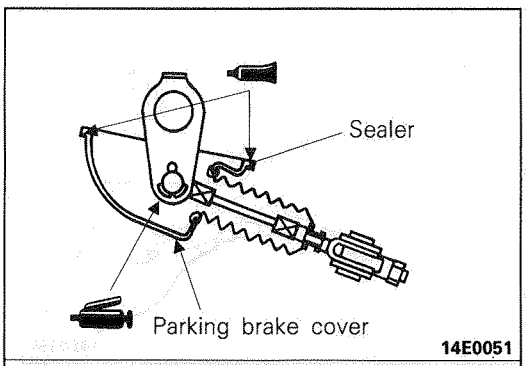

Sealant: 3M ATD Part No. 8661, 8663 or equivalent

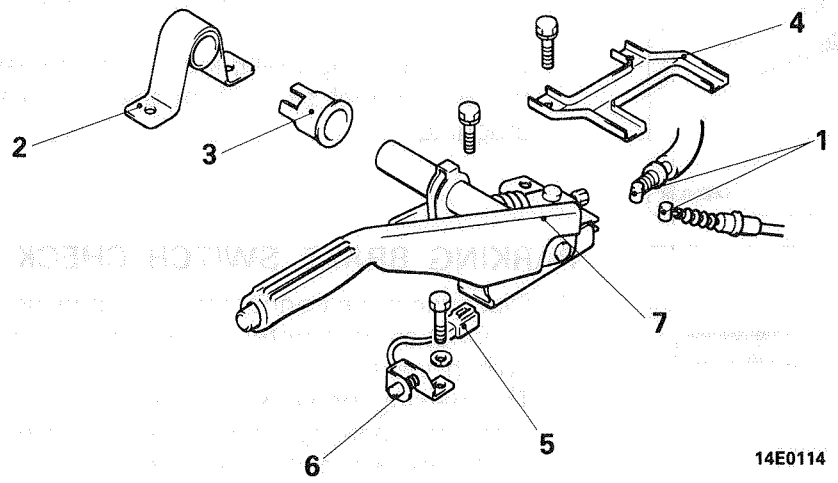

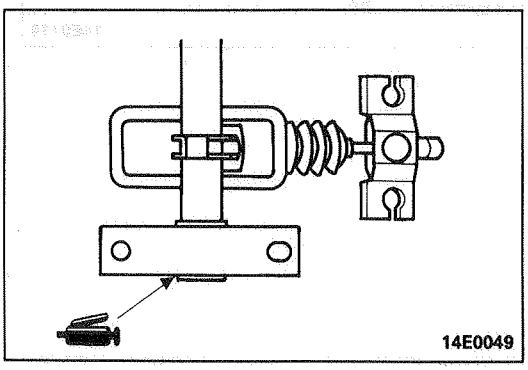

Removal steps
1. Connection for parking brake cable
2. Parking brake stay
3. Bushing
4. Parking brake shaft cover
5. Parking brake switch connector
6. Parking brake switch
7. Parking brake lever

TSB Revision

PARKING BRAKE CABLE

REMOVAL AND INSTALLATION

M36XA--

Post-installation Operation
- Adjustment of Parking Brake Lever Stroke (Refer to P.36-3.)

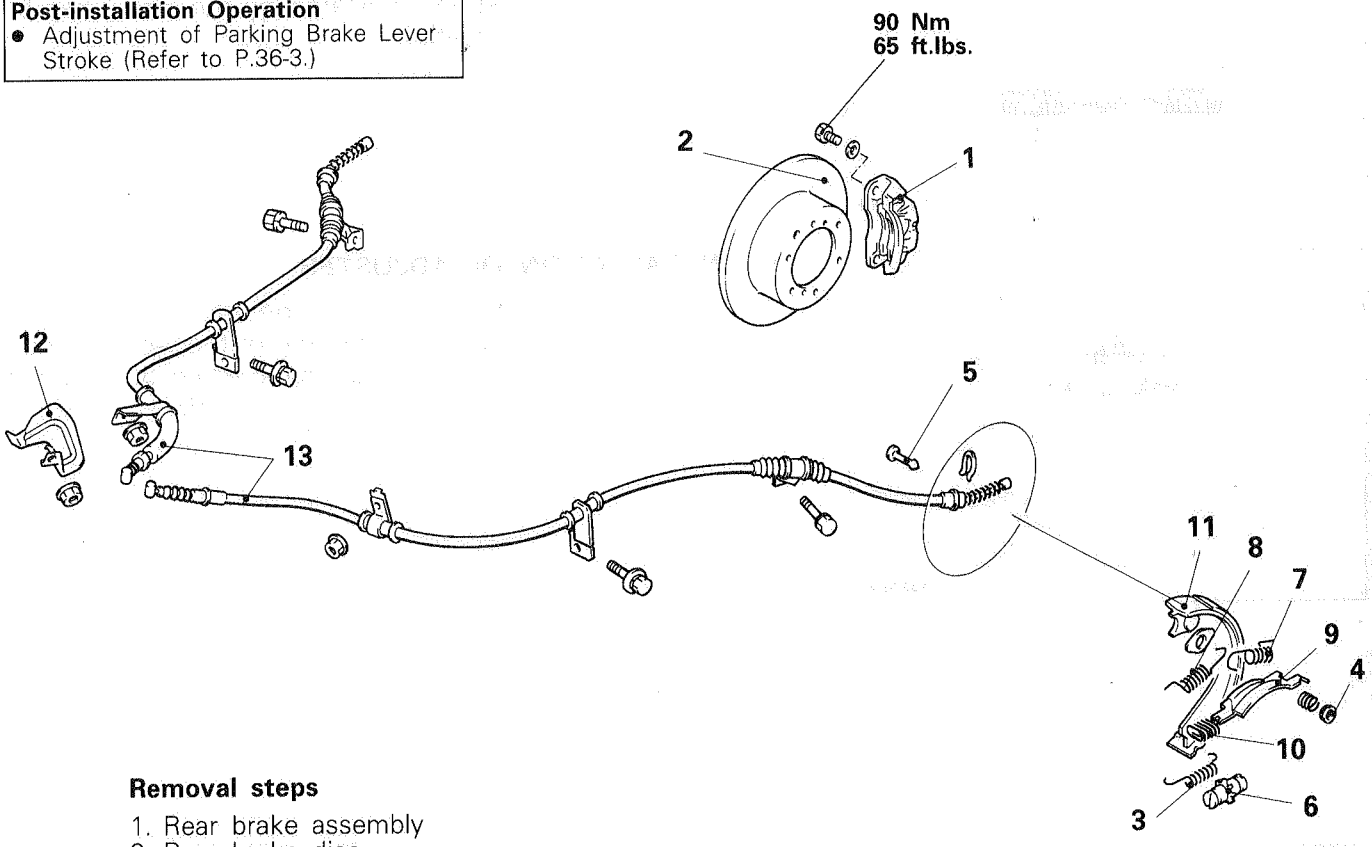

Removal steps

1. Rear brake assembly
2. Rear brake disc
3. Adjusting wheel spring
4. Shoe hold-down cup
5. Shoe hold-down pin
- ◆◆ 6. Adjuster
- ◆◆ 7. Anchor to shoe spring
- ◆◆ 8. Anchor to shoe spring
9. Strut
10. Strut to shoe spring
11. Shoe and lining assembly

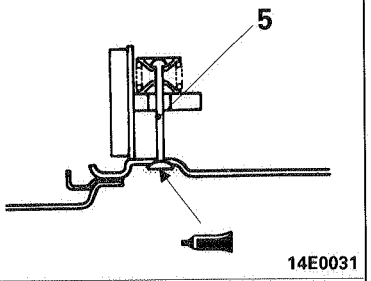

Sealant: 3M ATD Part No. 8513 or equivalent

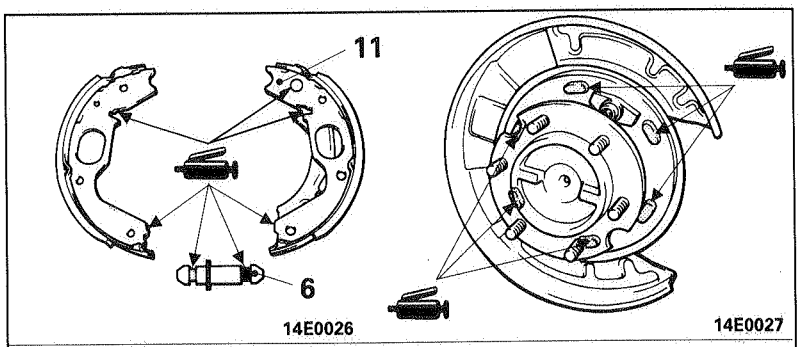

Brake grease: Brake grease SAE J310, NLGI No.1

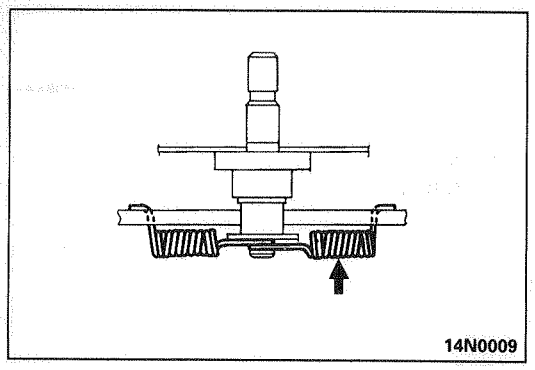
14N0009

SERVICE POINTS OF INSTALLATION M36XCAC

8./7. INSTALLATION OF ANCHOR TO SHOE SPRING

The load on the respective anchor-to-shoe springs is different, so the spring indicated by the arrow has been painted for identification.

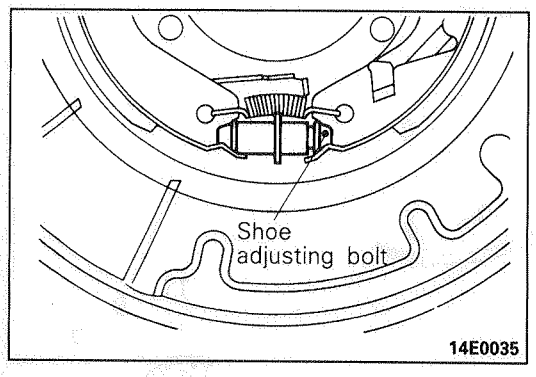

14E0035

6. INSTALLATION OF ADJUSTER

Install the adjuster so that the shoe adjusting bolt for the left-hand wheel is towards the rear of the vehicle, and the shoe adjusting bolt for the right hand wheel is towards the front of the vehicle. Shoe adjusting bolt

PARKING BRAKE DRUM

REMOVAL AND INSTALLATION

M36YA--

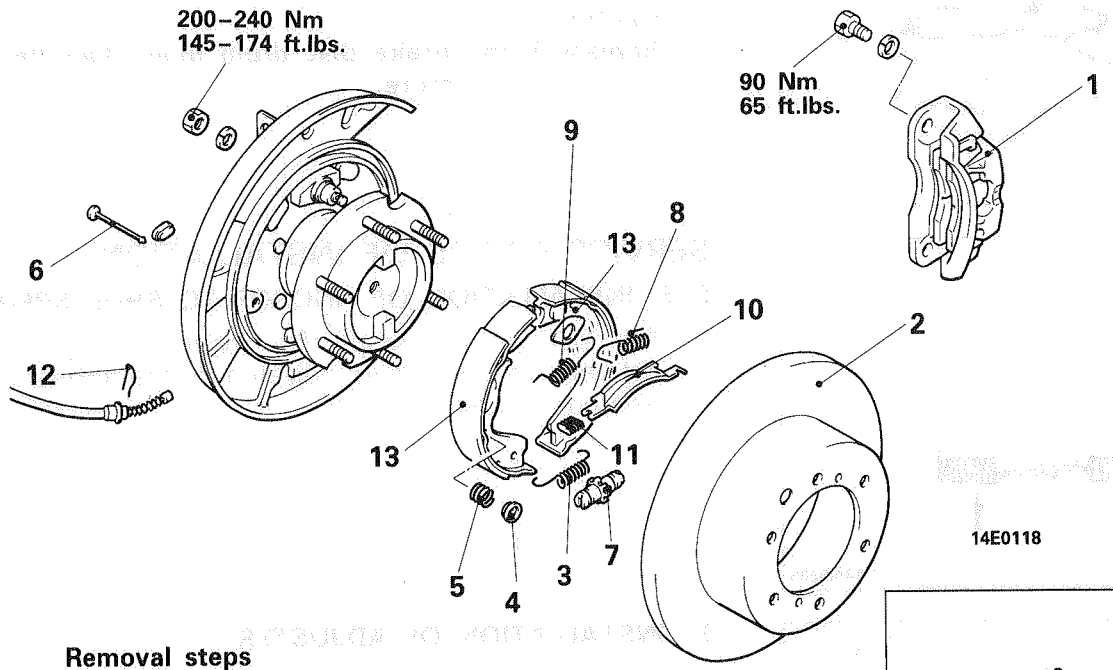

Removal steps

1. Rear brake assembly
2. Rear brake disc
3. Adjusting wheel spring
4. Shoe hold-down cup
5. Shoe hold-down spring
6. Shoe hold-down pin
- ◆◆ 7. Adjuster
- ◆◆ 8. Anchor to shoe spring
- ◆◆ 9. Anchor to shoe spring
10. Strut
11. Strut to shoe spring
12. Clip
13. Shoe and lining assembly

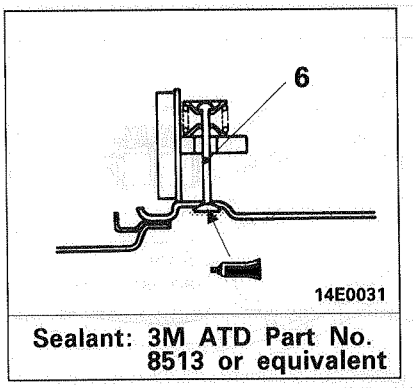

Sealant: 3M ATD Part No. 8513 or equivalent

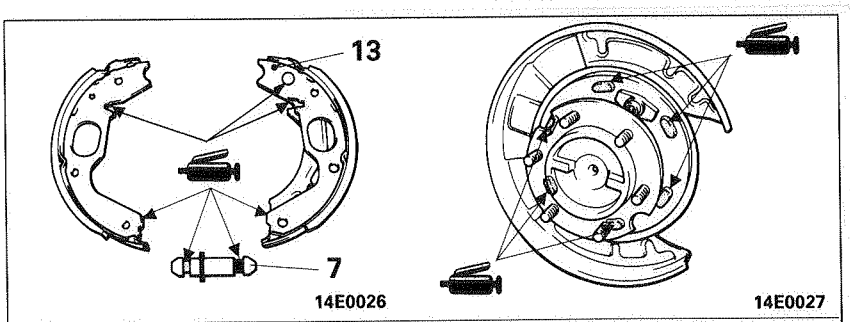

Brake grease: Brake grease SAE J310, NLGI No.1

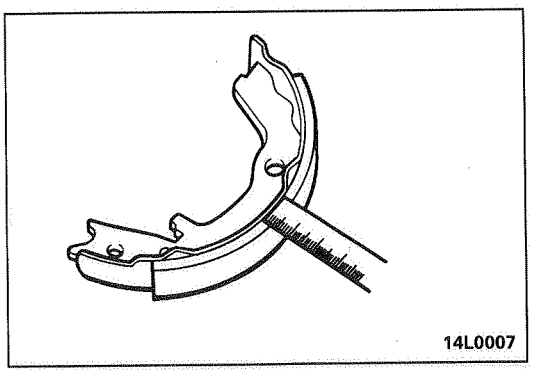

INSPECTION

M36YCAK

UNUSUAL WEAR OF THE BRAKE LINING AND BRAKE DRUM

(1) Measure the thickness of the brake lining at several places.

Standard value: 6.5 mm (.256 in.)
Limit: 4.5 mm (.177 in.)

Caution
Replace the brake shoes if the thickness of the brake lining is the limit value or less.

TSB Revision

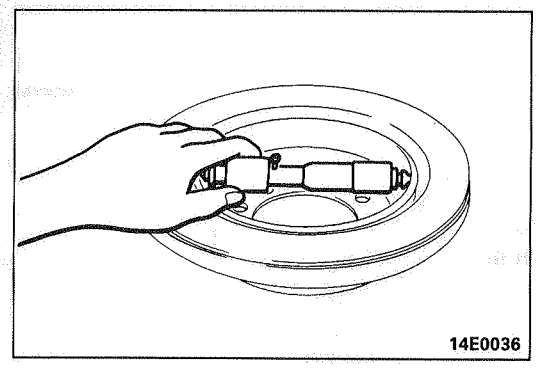
14E0036

(2) Measure the brake disc drum inner diameter at two or more places.

Standard value: 197 mm (7.756 in.)
Limit: 198 mm (7.795 in.)

Caution
Replace if the brake disc drum inner diameter is the limit value or more.

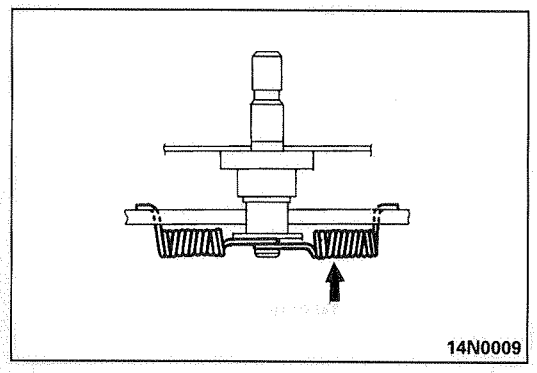
14N0009

SERVICE POINTS OF INSTALLATION M36DAE

9./8. INSTALLATION OF ANCHOR TO SHOE SPRING

The load on the respective anchor-to-shoe springs is different, so the spring indicated by the arrow has been painted for identification.

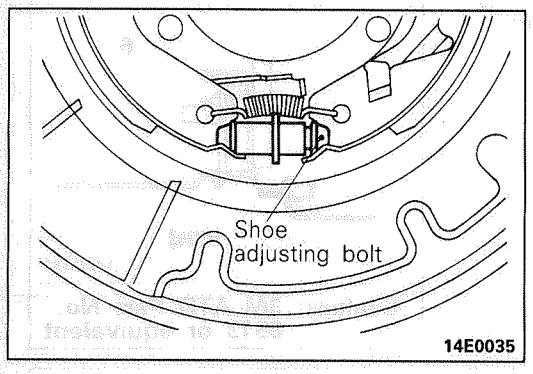

14E0035

7. INSTALLATION OF ADJUSTER

Install the adjuster so that the shoe adjusting bolt for the left-hand wheel is towards the rear of the vehicle, and the shoe adjusting bolt for the right hand wheel is towards the front of the vehicle.

Items	Specifications
Limit	
Steering wheel free play mm (in.)	50 (1.97)
Steering gear backlash mm (in.)	0.5 (.020)
Ball joint end play mm (in.)	1.5 (.059)
Backlash between ball groove of rack piston and balls mm (in.)	0.05 (.0020)
Gap between vane and rotor groove mm (in.)	0.06 (.0024)
Clearance between oil pump drive shaft and pump body mm (in.)	0.1 (.004)

LUBRICANTS

M37CD--

Items	Specified lubricant	Quantity
Power steering fluid	MITSUBISHI PLUS ATF/Automatic transmission fluid "DEXRON" or "DEXRON II"	1.06 dm^3 (1.12 qts.)
Power steering gear box Bearing, O-ring and oil seal	MITSUBISHI PLUS ATF/Automatic transmission fluid "DEXRON" or "DEXRON II"	As required
Oil pump Flow control valve and O-ring Friction surface of rotor, vane, cam ring and pump cover	MITSUBISHI PLUS ATF/Automatic transmission fluid "DEXRON" or "DEXRON II"	As required

SEALANTS AND ADHESIVES

M37CE--

Items	Specifications
Steering column cover assembly installation hole Dash panel cover installed surface Tie-rod end dust cover installed surface	3M ATD Part No. 8663 or equivalent
Inside of steering column lower pipe bearing Connection of steering column upper and steering column lower (Nut side)	3M Stud Locking Part No. 4170 or equivalent
Steering column upper bearing	3M ATD Part No. 8001 or equivalent

SPECIAL TOOLS

M37DA--

Tool	Number	Name	Use
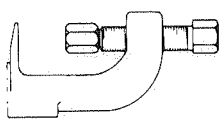	MB990635-01	Steering linkage puller	Disconnection of the tie rod and knuckle

Tool	Number	Name	Use
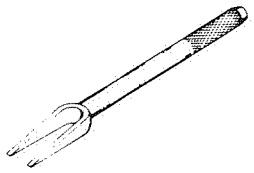	MB990778-01	Ball joint remover	Disconnection of the pitman arm and relay rod Disconnectin of the idler arm and relay rod
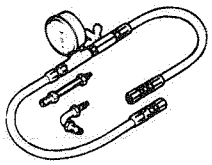	MB990662-01	Oil pressure gage	Measurement of the oil pump pressure
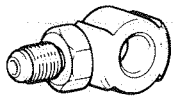	MB990993-01	Oil pressure gage adapter (pump side)	
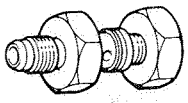	MB990994-01	Oil pressure gage adapter (hose side)	
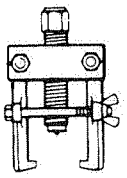	MB990809-01	Pitman arm puller	Removal of the pitman arm
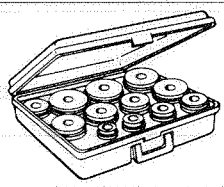	MB990925-01	Bearing and oil seal installer set	Installation of the oil seal and the ball bearing (Refer to GROUP 26) MB990928-01, MB990926-01
	MB990938-01	Handle	
	MB991203	Oil seal and bearing installer	
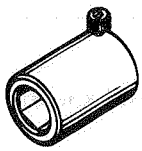	MB990228-01	Preload socket	Measurement of the mainshaft total sharting torque

Tool	Number	Name	Use
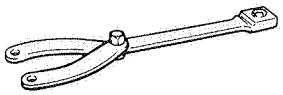	MB991367	Special spanner	Removal and installation of the lock nut
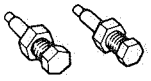	MB991394	Pin set	

TROUBLESHOOTING

M37EABBb

Symptom	Probable cause	Remedy
Excessive play of steering wheel	Excessive play in steering gear box	Repair
	Loose steering gear mounting bolts	Retighten
	Loose or worn stud of tie rod end	Retighten or replace as necessary
Steering wheel operation is hard (insufficient power assist)	Loose belt	Adjust the belt tension
	Damaged belt	Replace the belt
	Low fluid level	Refill with fluid
	Air in fluid line	Bleed the system
	Twisted or damage hoses	Correct the hose routing or replace the hoses
	Fluid leakage	Check the fluid leakage
	Malfunction of gear box	Check and replace the gear box if necessary
	Malfunction of oil pump	Check the oil pump pressure and repair oil pump
Rattling noise	Loose installation of oil pump or gear box	Retighten the oil pump or gear box
	Interference around column or between pressure hose and other parts	Correct or replace the pressure hose and the parts around the column
	Abnormal noise inside of gear box and oil pump	Replace the gear box or oil pump
Shrill noise	Air sucked into oil pump	Check the oil level and hose clips, bleed the system or replace the oil pump
	Oil pump seizure	Replace the oil pump
Squealing noise	Loose belt	Adjust the belt tension
	Oil pump seizure	Replace the oil pump

Symptom	Probable cause	Remedy
Hissing noise	Air sucked into oil pump	Check the oil level and hose clips; bleed the system
	Damage to the olive of the gear box port section	Replace the gear box
	Malfunction of return hose	Replace the hose
Whistling noise	Malfunction of gear box port section	Replace the gear box
Droning noise	Loose mounting bolt on oil pump or oil pump bracket	Retighten the pump bracket or pump mounting bolt
	Poor condition of oil pump body*	Replace the oil pump
Squeaking noise	Malfunction of steering stopper contact	Check and adjust the steering stopper
	Interference of wheel with vehicle body	Adjust the steering angle
	Malfunction of gear box	Replace the gear box
Vibration**	Air suction	Bleed the system
	Malfunction of gear box	Replace the gear box
Oil leakage from hose connection	Improperly tightened flare nut Incorrectly inserted hose Improperly clamped hose	Repair or replace
Oil leakage from hose assembly	Damaged or clogged hose Hose connector malfunction	Replace
Oil leakage from oil reservoir	Improperly welded pipe	Weld the pipes or replace
	Overflow	Bleed the system or adjust the oil level
Oil leakage from oil pump	Malfunction oil pump housing	Replace the oil pump
	Malfunction of O-ring and/or oil seal	Replace the O-ring and oil seal
Oil leakage from gear box	Malfunction of gear box housing (including leakage from air hole)	Replace the gear box
	Malfunction of O-ring and/or oil seal	Replace the O-ring and oil seal

NOTE
* A slight "beat noise" is produced by the oil pump; this is not a malfunction. (This noise occurs particularly when a stationary steering effort is made.)
** A slight vibration may be felt when the stationary steering effort is made due to the condition of the road surface. To check whether the vibration actually exists or not, test-drive the vehicle on a dry concrete or asphalt surface. Moreover, a very slight amount of vibration is not a malfunction.

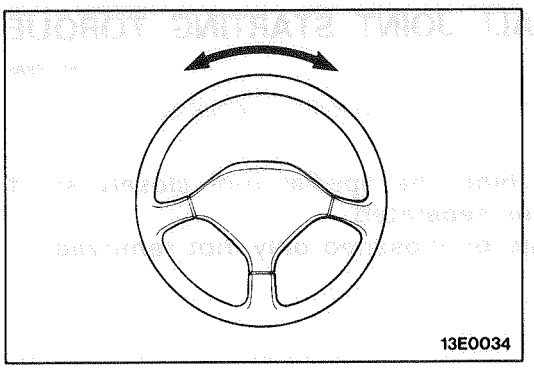

SERVICE ADJUSTMENT PROCEDURES

STEERING WHEEL FREE PLAY CHECK M37FABDa

1. With the engine stationary and the steering wheel in the straight-ahead position, apply a force of 5N (1.1 lbs.) to the steering wheel in the peripheral direction. Measure the play on the circumference of the steering wheel.

   Standard value: 26.6 mm (1.05 in.) or less
   Limit: 50 mm (1.97 in.)

2. If the measured value exceeds the repair limit, check the steering gear backlash and linkage ball joint end play.

STEERING GEAR BACKLASH CHECK M37FOAE

1. Jack up the vehicle front and hold the steering wheel in the straight ahead position.
2. Disconnect the pitman arm and the relay rod by using special tool.

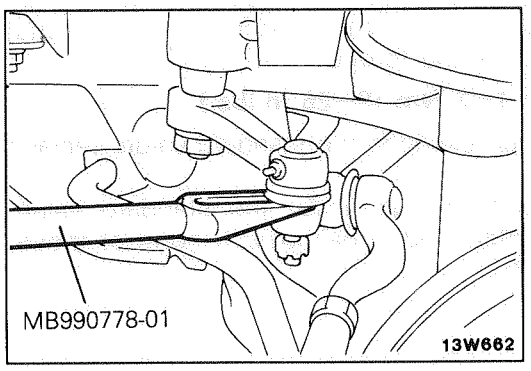

3. Measure the steering gear backlash at the pitman arm top end with a dial indicator.

   Limit : 0.5 mm (.020 in.)

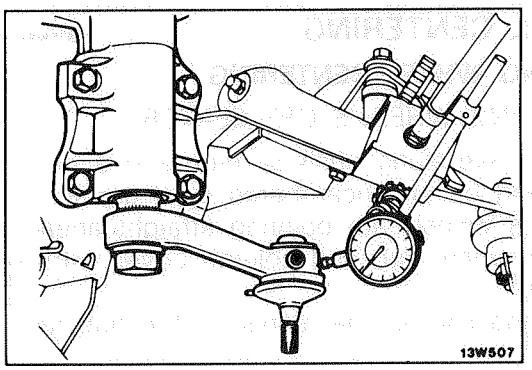

4. If the measured value exceeds the limit, screw in the steering gear box adjusting bolt until steering wheel free play is within the range of standard value.

   Caution
   1. Be sure to make the adjustment with the steering wheel in the straight-ahead position.
   2. If the adjusting bolt is overtightened, more steering effort will be required, and return of the wheel will be adversely affected.

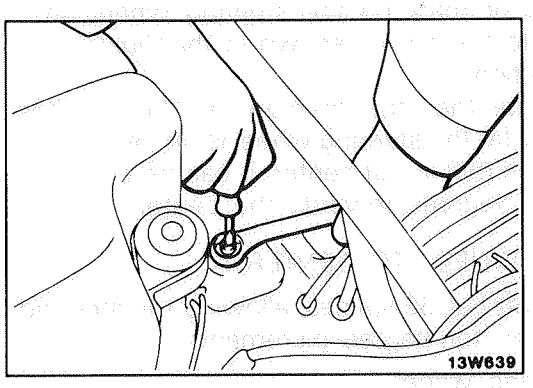

BALL JOINT END PLAY CHECK M37FPAD

1. Hold the ball joint with pliers.
2. Set a caliper gage as shown in left figure and measure the displacement with the ball stud compressed.

   Limit : 1.5 mm (.059 in.)

3. If the measured displacement is over the limit, replace the ball joint.

   NOTE
   Even if the measured displacement is within the limit, check ball joint starting torque.

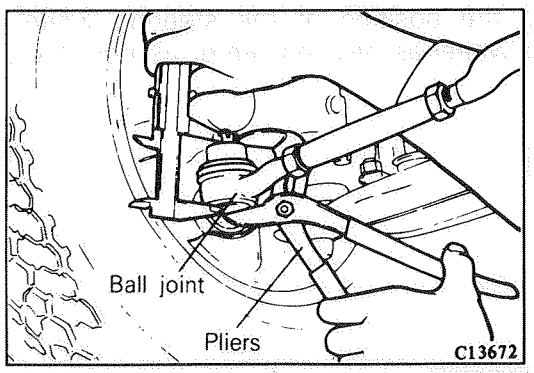

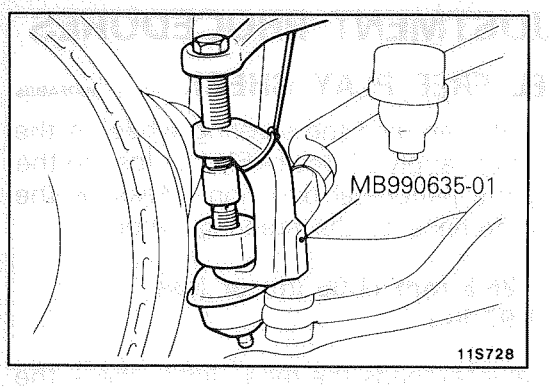

TIE ROD END BALL JOINT STARTING TORQUE CHECK

M37FEBE

1. Disconnect tie rod and knuckle with special tool.

Caution
1. Use cord to bind the special tool closely so it won't becomes separated.
2. The nut should be loosened only, not removed.

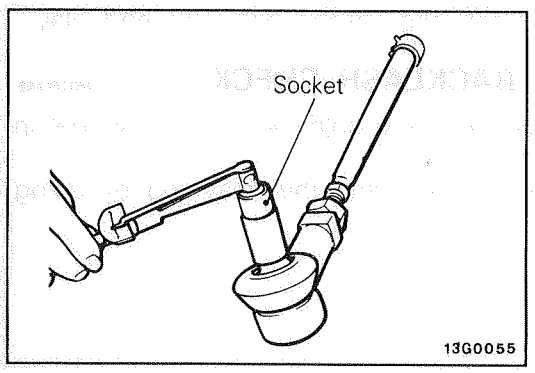

2. Move ball joint stud several times and install nut on stud. Measure ball joint starting torque.

Standard value: 1–3 Nm (9–26 in.lbs.)

3. When starting torque exceeds the standard value, replace tie rod end.
4. When the starting torque is under the standard value, check for play or ratcheting in ball joint. If none of these, it is still serviceable.

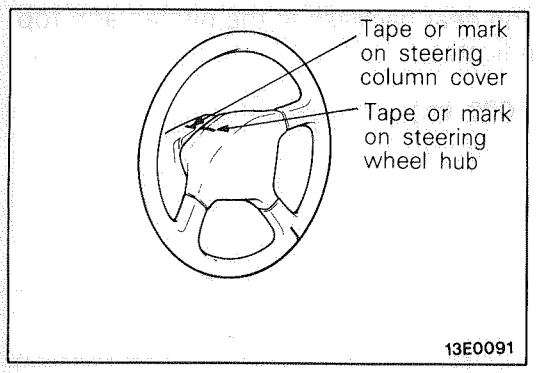

STEERING WHEEL CENTERING

M37FNAB

SIMPLIFIED STEERING WHEEL CENTERING

DETERMINING STEERING WHEEL'S OFF CENTER

1. For the road test, take along chalk or tape and a ruler.
2. Drive straight ahead on an uncambered level surface.
3. When the vehicle's wheels are pointing straight ahead, mark the steering wheel hub and column cover with a chalk or tape line.
4. Stop the vehicle and line up the marks on the hub and column cover.
5. Place a tape strip or mark on the steering wheel rim.
6. Hold a ruler next to the rim as shown in the illustration, and centered position.
7. Record the distance the strip or mark on the rim has moved. This is how far the steering wheel is off center. If it is more than 16 mm (5/8 in.) of center, it can be centered by indexing it ten degrees towards the center.

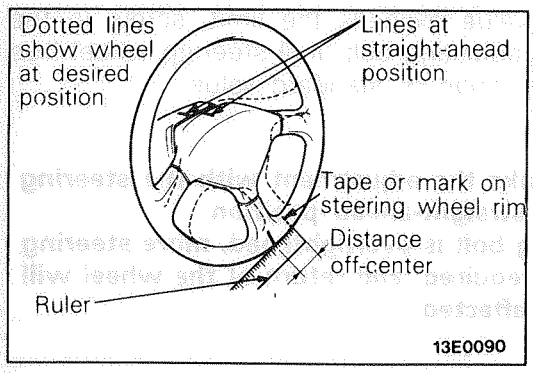

INDEXING STEERING WHEEL TO CENTER IT

The steering wheel shaft has 36 splines, allowing the steering wheel to be indexed in ten-degree increments.

1. Remove the steering wheel.
2. Without disturbing the position of the steering wheel shaft, re-install the wheel as near on-center as possible.

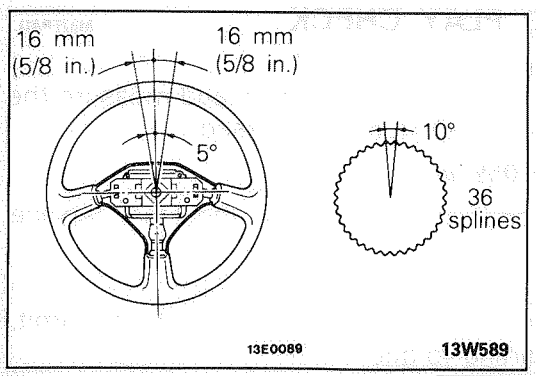

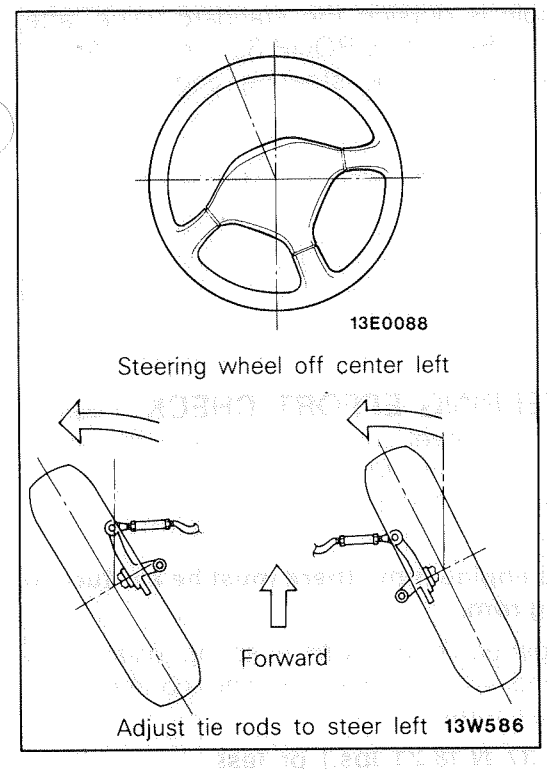

PRECISION STEERING WHEEL CENTERING

In general, the tie rods are adjusted to steer the front wheels in the same direction that the steering wheel is off center. If the steering wheel is off center to the left, center it by adjusting the tie rods to make the front wheels steer toward the left, and vice versa.

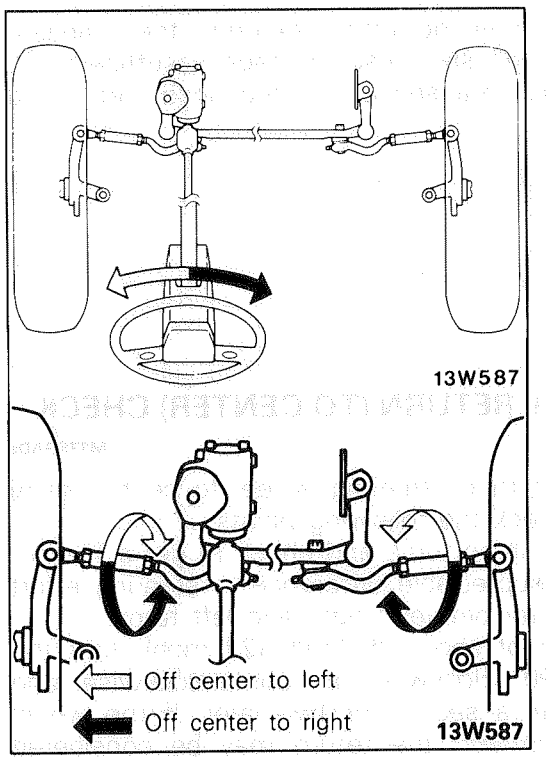

1. Hold the tie rods with a wrench while loosening the locking nuts at least 1/4 turn.
2. Hold the tie rod end with a wrench and turn the tie rod the desired number of turns. Adjust both tie rods equally in the same direction to center the steering wheel.

NOTE
By turning the tie rods 1/6 of a turn, an adjustment of 2° (at the steering wheel center) or 6 mm (.25 in.) (at the steering wheel rim) can be made.

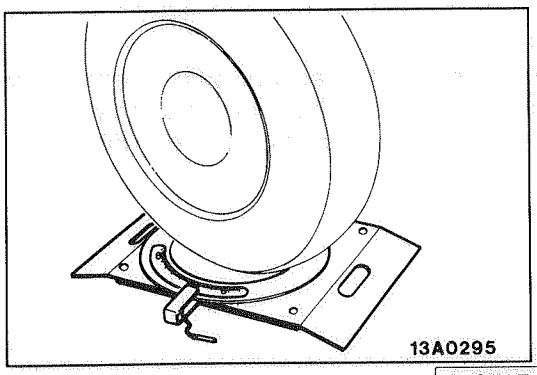

STEERING ANGLE CHECK M37FDBL

1. Place the front wheel on a turning radius gage and measure the steering angle.

Standard value: **Inner wheel 32°40′ $^{0}_{-3}$′**
Outer wheel 29°45′

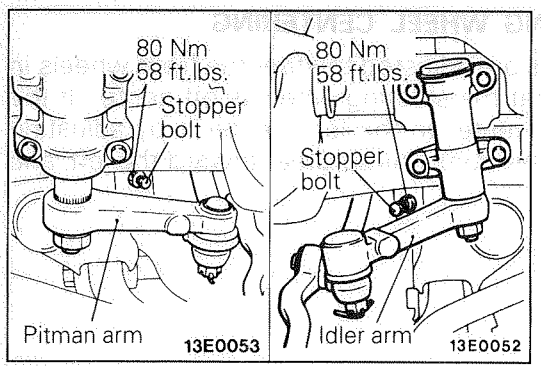

2. If the steering angle is outside the standard value, after checking the toe-in, (Refer to GROUP 33–Service Adjustment Procedures), adjust the steering angle with the stopper bolt.

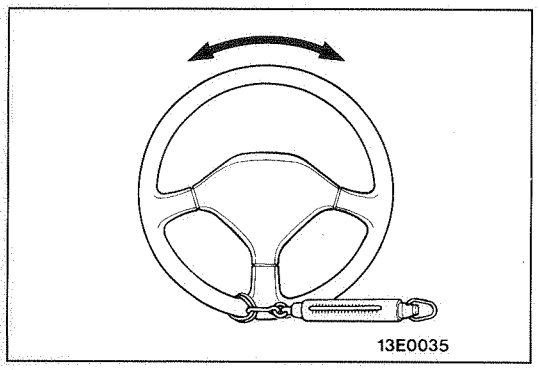

STATIONARY STEERING EFFORT CHECK M37FFAN

1. Place the vehicle on a level surface and place the steering wheel in the straight-ahead position.
2. Set the engine speed to 1,000 rpm.

   Caution
   After checking the engine rpm., there must be a return to the standard idling rpm.

3. Measure the tangential force with a spring balance by turning the steering wheel clockwise and counterclockwise one and a half turns.

   Standard value: 37 N (8.21 lbs.) or less

4. If the stationary steering effort exceeds the standard value, check for belt slackness, damage, insufficient oil, air mixed into oil, collapsed or twisted hoses, etc., and repair if found.

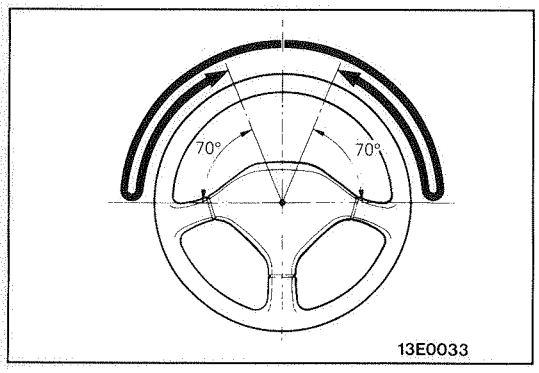

STEERING WHEEL RETURN (TO CENTER) CHECK

M37FGADa

To check for the return of steering wheel to center, carry out drive test and check the following points.

1. Make gentle and sharp turns and check to get a feel for that there is no appreciable difference in steering effort and return to center between right and left turns.
2. Drive at a speed of about 35 km/h (22 mph), turn the steering wheel 90° clockwise or counterclockwise, and release the wheel a second or two later. If the wheel returns more than 70°, the return may be considered good.

   NOTE
   When the steering wheel is turned abruptly, momentary hard steering might result, but this does not mean any problem. It is caused by low oil pump delivery during idling.

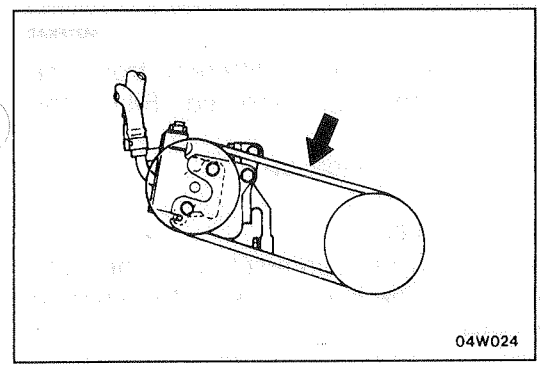

DRIVE-BELT TENSION CHECK M37FHAL

1. Measure the flexion of the V belt when it is subjected to a force of 100 N (22 lbs.) in the place shown.

Standard value:

mm (in.)

When checked	9.0–14.5 (.354–.571)
When a new belt is installed	8.0 (.315)
When an old belt is installed	10.0 (.394)

2. If the flexion value is outside the standard value, adjust by the following procedure.
   (1) Loosen oil pump fixing bolts A, B and C.
   (2) Adjust the amount of flexion in the belt by setting a bar against the body of the oil pump and tightening the belt by hand to the appropriate amount.
   (3) Tighten the fixing bolts A, B and C in that order.

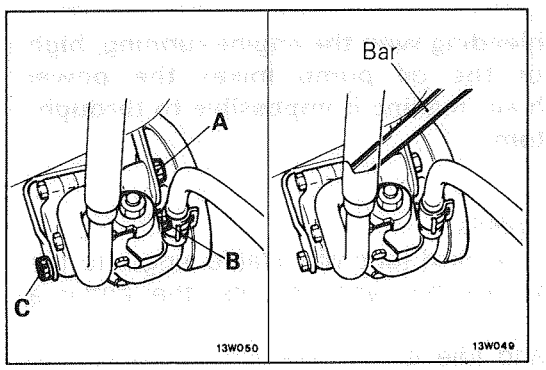

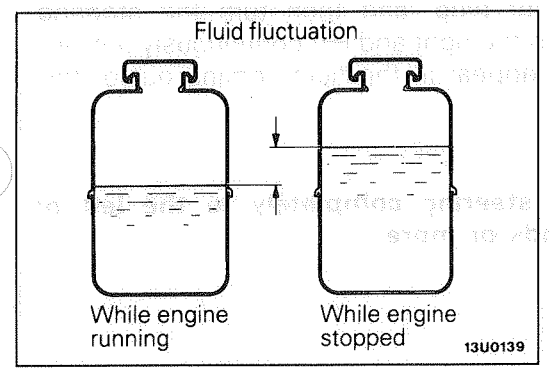

FLUID LEVEL CHECK M37FIAK

1. Park the vehicle on a flat, level surface, start the engine, and then turn the steering wheel several times to raise the temperature of the fluid to approximately 50–60°C (122–140°F).
2. With the engine running, turn the wheel all the way to the left and right several times.
3. Check the fluid in the oil reservoir for foaming or milkiness.
4. Check the difference of the fluid level when the engine is stopped, and while it is running. If the fluid level changes considerably, air bleeding should be done.

FLUID REPLACEMENT M37FJAFb

Check for contamination in the fluid reservoir. Foamy or cloudy fluid should be replaced.

1. Remove the reservoir cap.
2. Disconnect the return hose from the reservoir tank and remove the fluid.
3. Disconnect the high tension cable.
4. Run the engine intermittently several times with the starting motor, and remove the fluid from the gear box.
5. Attach the return hose and supply the specified fluid.

   Specified fluid : MITSUBISHI PLUS ATF/Automatic transmission fluid "DEXRON" or "DEXRON II"

6. Bleed the system and check the fluid pressure.

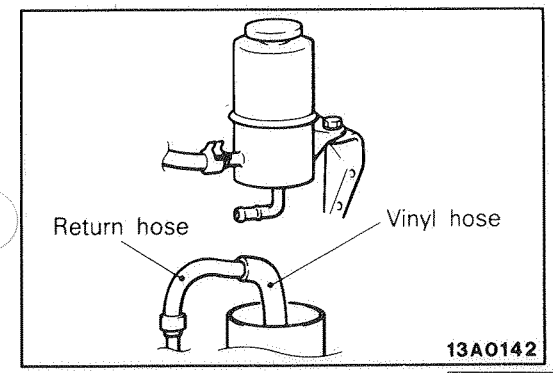

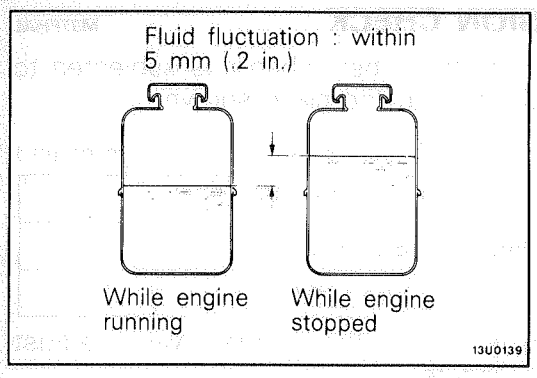

AIR BLEEDING

M37FKAD

Check stationary steering effort. If it is different from the standard value, air in the system is suspected. Bleed the system.

1. Make certain the reservoir is filled up.
2. Jack up the front wheels.
3. Remove the high tension cable.
4. While turning the steering wheel completely to the right and to the left, turn the engine over by using the starting motor. Repeat this several times.

Caution
Do not carry out bleeding with the engine running, high speed rotation of the oil pump mixes the power steering fluid with air, making it impossible to throughly bleed the system.

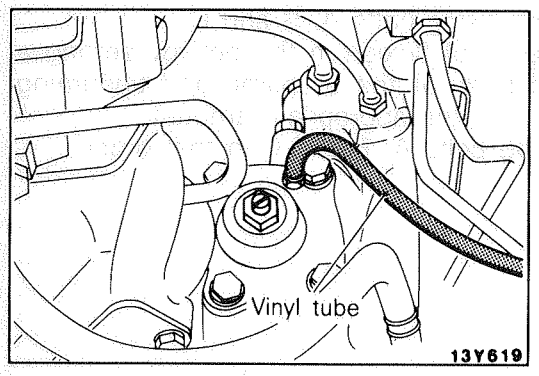

5. Lower the front wheels.
6. Connect one end of a vinyl tube of suitable length to the breather plug of the gear box, and place its other end in a container.
7. Start the engine and idle it.
8. Loosen the breather plug, and then turn the steering wheel completely to the right and left continuously until air bubbles no longer appear in the fluid coming out of the tube.

Caution
Do not hold the steering completely to the left or right for 10 seconds or more.

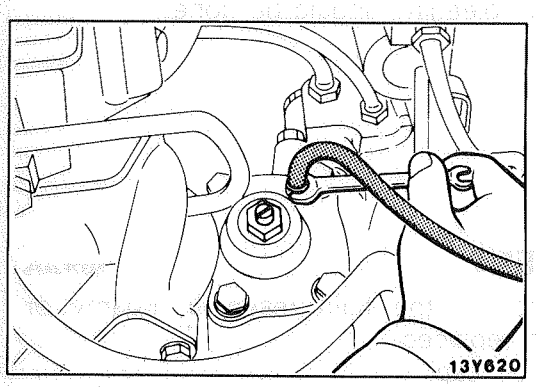

9. After completion of the bleeding, tighten the breather plug. Check the fluid level, and refill if necessary.
10. When turning the steering wheel right and left fully, check that the fluid level variation is less than 5 mm (.2 in.)

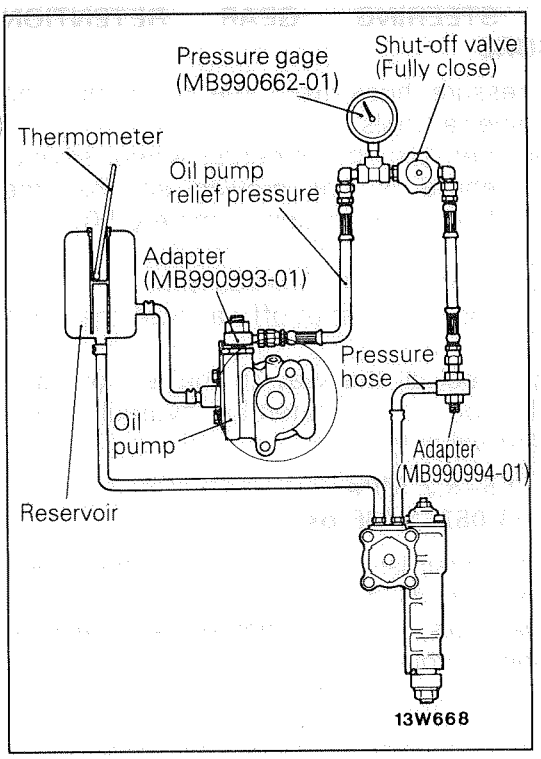

OIL PUMP PRESSURE TEST M37FLAH

CHECKING THE OIL PUMP RELIEF PRESSURE

1. Disconnect the pressure hose from the oil pump, and then connect the special tools.
2. Bleed the air, and then turn the steering wheel several times while the vehicle is not moving so that the temperature of the fluid rises to approximately 50–60°C (122–140°F).
3. Start the engine and idle it at 1,000 ± 100 rpm.
4. Full close the shut-off valve of the pressure gage and measure the oil pump relief pressure to confirm that it is within the standard value range.

   Standard value: 7.5–8.2 MPa (1,067–1,166 psi.)

   Caution
   Pressure gage shut off valve must not remain closed for more than 10 seconds.
5. If it is not within the standard value, overhaul the oil pump.
6. Remove the special tools, and then tighten the pressure hose to the specified torque.
7. Bleed the system.

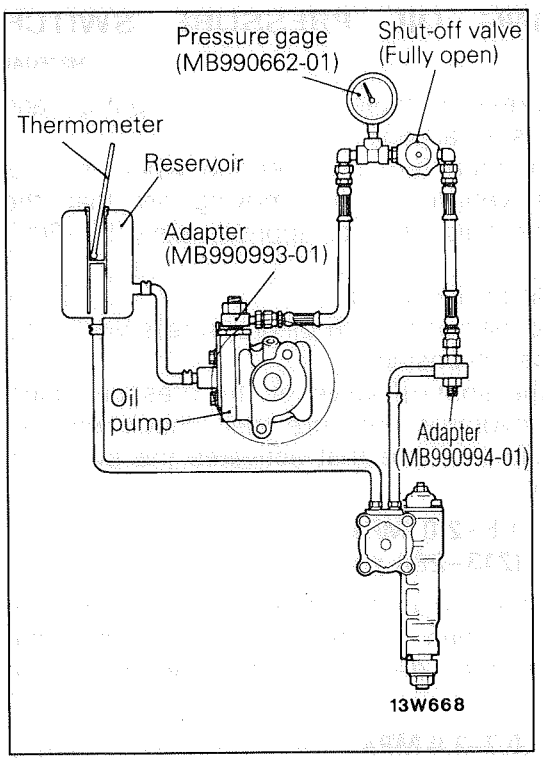

CHECKING THE PRESSURE UNDER NO-LOAD CONDITIONS

1. Disconnect the pressure hose from the oil pump, and then connect the special tools.
2. Bleed the air, and then turn the steering wheel several times while the vehicle is not moving so that the temperature of the fluid raises to approximately 50–60°C (122–140°F).
3. Start the engine and idle it at 1,000 ± 100 rpm.
4. Check whether or not the hydraulic pressure is the standard value when no-load conditions are created by fully opening the shut-off valve of the pressure gage.

   Standard value: 0.8–1.0 MPa (114–142 psi.)
5. If it is not within the standard value, the probable cause is a malfunction of the oil line or steering gear box, so check these parts and repair as necessary.
6. Remove the sycial tools, and then tighten the pressure hose to the specified torque.
7. Bleed the system.

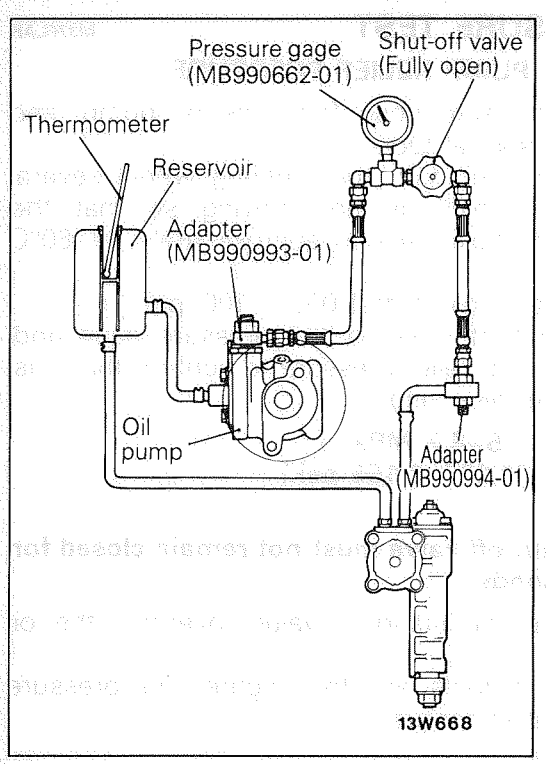

CHECKING THE STEERING GEAR RETENTION HYDRAULIC PRESSURE

1. Disconnect the pressure hose from the oil pump, and then connect the special tools.
2. Bleed the air, and then turn the steering wheel several times while the vehicle is not moving so that the temperature of the fluid rises to approximately 50–60°C (122–140°F).
3. Start the engine and idle it at 1,000±100 rpm.
4. Fully close and fully open the shut-off valve of the pressure gage.
5. Turn the steering wheel all the way to the left or right; then check whether or not the retention hydraulic pressure is the standard value.

   Standard value: 7.5–8.2 MPa (1,067–1,166 psi.)

6. When not within the standard value, overhaul the steering gear box. Remeasure fluid pressure.
7. Remove the special tools, and then tighten the pressure hose to the specified torque.
8. Bleed the system.

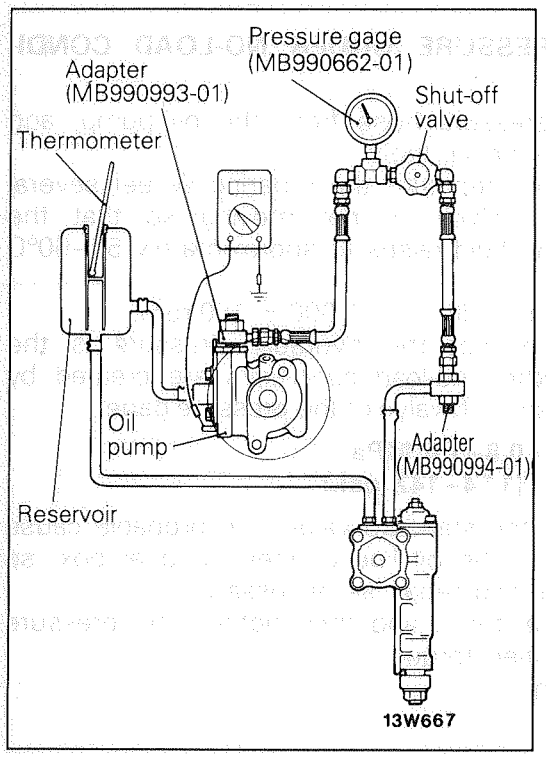

POWER STEERING OIL PRESSURE SWITCH CHECK <A/T>

M37FUAC

1. Disconnect the pressure hose from the oil pump, and then connect the special tools.
2. Bleed the air, and then turn the steering wheel several times while the vehicle is not moving so that the temperature of the fluid rises to approximately 50–60°C (122–140°F).
3. The engine should be idling.
4. Disconnect the connector for the oil-pressure switch, and place an ohmmeter in position.
5. Gradually close the shut-off valve of the pressure gage and increase the hydraulic pressure then check whether or not the hydraulic pressure that activates the switch is the standard value.

   Standard value: 1.5–2.0 MPa (213–284 psi.)

6. Gradually open the shut-off valve and reduce the hydraulic pressure; then check whether or not the hydraulic pressure that deactivates the switch is the standard value.

   Standard value: 0.7–2.0 MPa (100–284 psi.)

7. Remove the special tools, and then tighten the pressure hose to the specified torque.
8. Bleed the system.

STEERING COLUMN AND SHAFT

REMOVAL AND INSTALLATION

M37GA-

Post-installation Operation
- Checking of Steering Wheel Position with Wheels Straight Ahead

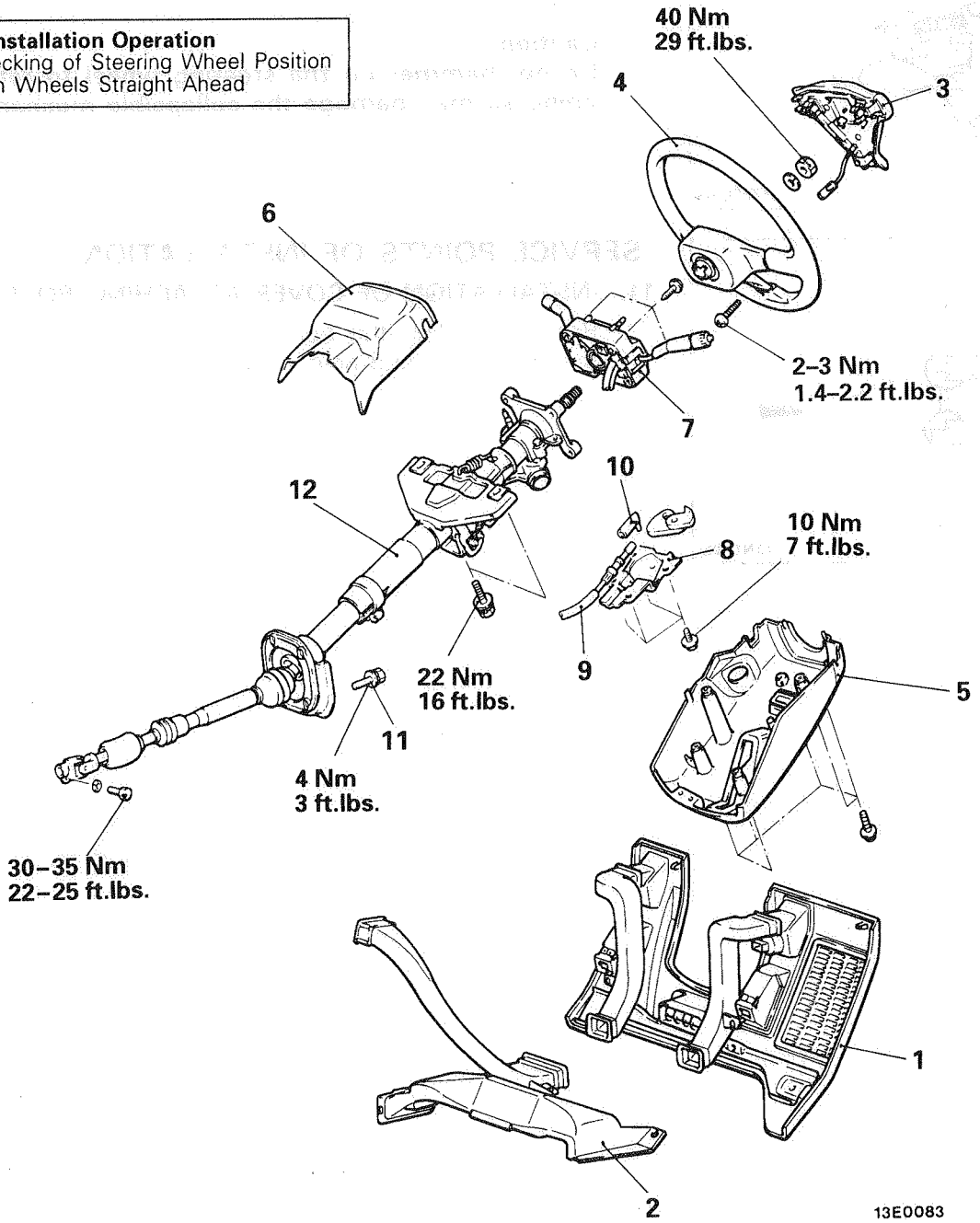

13E0083

Removal steps

1. Instrument under cover (Refer to GROUP 52–Instrument Panel.)
2. Lap cooler duct and foot shower duct (Refer to GROUP 55–Ventilators.)
3. Horn pad
◀▶ 4. Steering wheel
5. Lower column cover
6. Upper column cover
7. Column switch
8. Cover
9. Key interlock cable
10. Slide lever

<A/T> (Refer to GROUP 23–Transmission Control.)

◀▶◀ 11. Cover attaching bolt
12. Steering column and shaft assembly

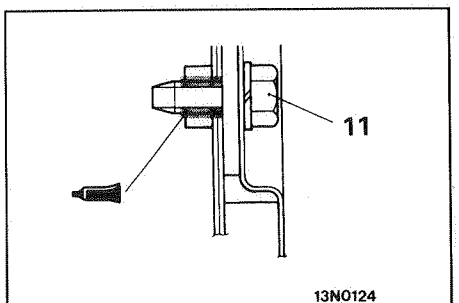

13N0124

Sealant: 3M ATD Part No. 8663 or equivalent

TSB Revision

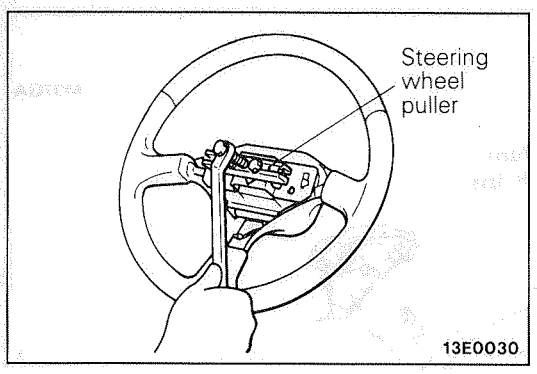

SERVICE POINTS OF REMOVAL M37GBAW

4. REMOVAL OF STEERING WHEEL

Remove the steering wheel by using a steering wheel puller.

Caution
Do not hammer on the steering wheel to remove it; doing so may damage the collapsible mechanism.

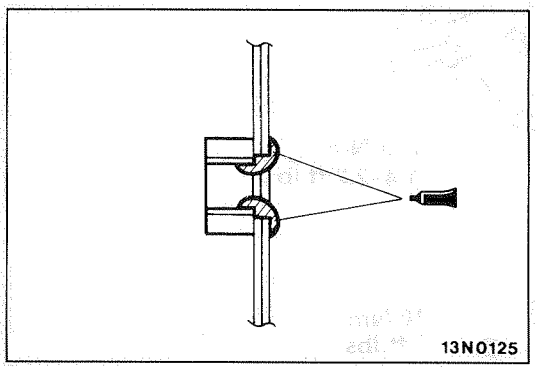

SERVICE POINTS OF INSTALLATION M37GDAS

11. INSTALLATION OF COVER ATTACHING BOLT

Before installing the bolt, apply specified sealant to the toeboard mounting hole.

DISASSEMBLY AND REASSEMBLY

M37GE--

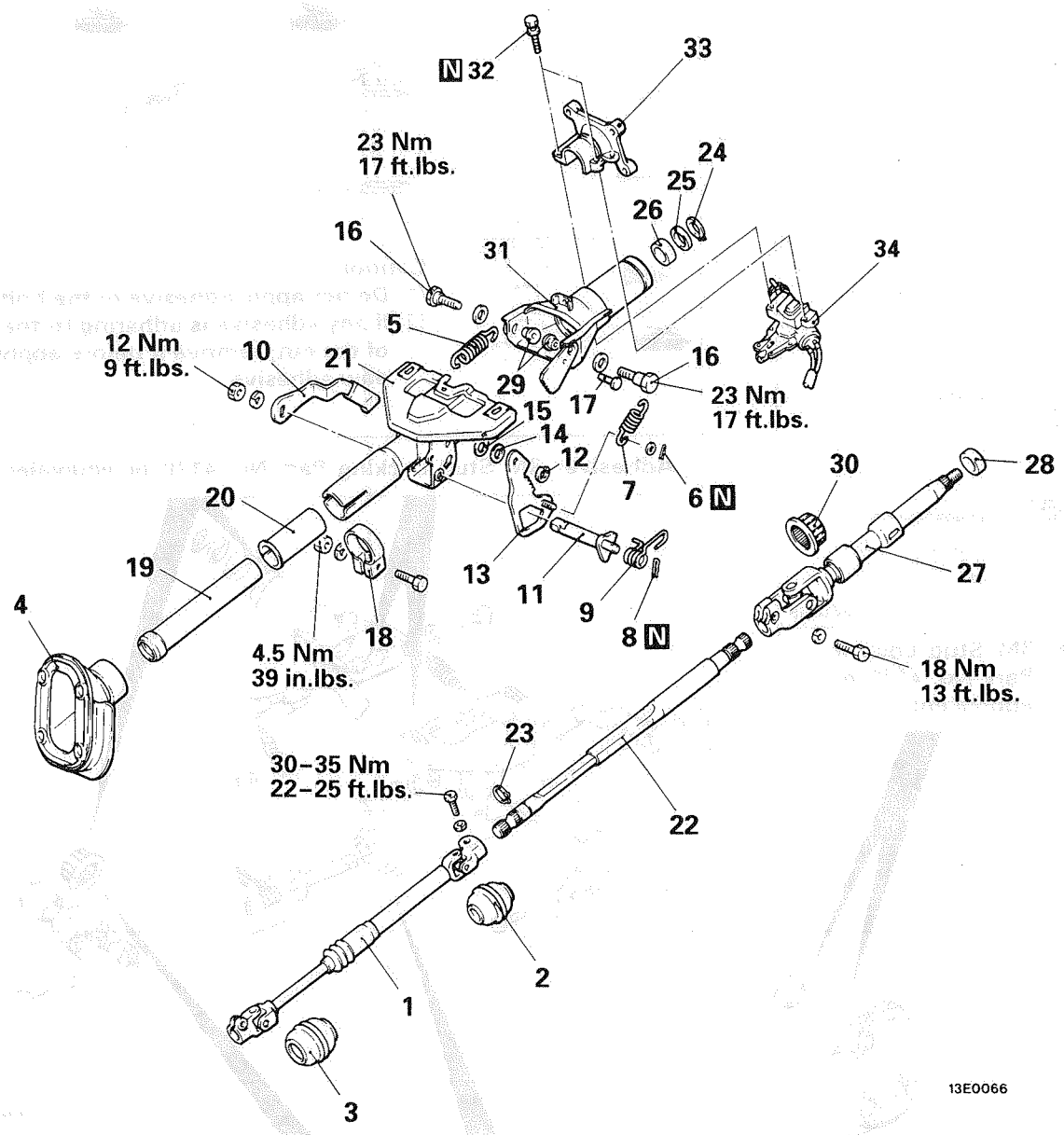

Disassembly steps

- ◆◆ 1. Joint assembly
- 2. Upper boot
- 3. Lower boot
- 4. Cover assembly
- 5. Return spring
- 6. Split pin
- 7. Return spring
- 8. Split pin
- 9. Return spring
- 10. Tilt lever
- 11. Shaft
- 12. Snap ring
- 13. Lock plate
- 14. Washer
- 15. Wave washer
- 16. Bolt
- ◆◆ ◆◆ 17. Clevis pin
- ◆◆ 18. Clamp
- ◆◆ 19. Lower pipe
- 20. Steering column bushing
- 21. Steering column, lower
- ◆◆ 22. Steering shaft, lower
- 23. Snap ring
- ◆◆ 24. Snap ring
- 25. Stopper
- 26. Bearing spacer
- 27. Steering shaft, upper
- 28. Bearing spacer
- 29. Bushing
- 30. Bearing
- 31. Steering column, upper
- ◆◆ 32. Special bolt
- ◆◆ ◆◆ 33. Steering lock bracket
- ◆◆ ◆◆ 34. Steering lock cylinder

LUBRICATION, SEALING AND ADHESION POINTS

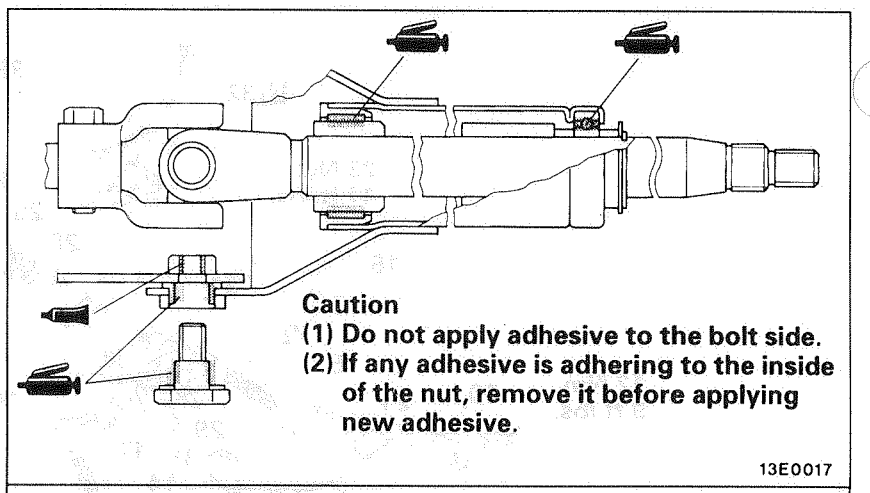

Caution
(1) Do not apply adhesive to the bolt side.
(2) If any adhesive is adhering to the inside of the nut, remove it before applying new adhesive.

13E0017

Adhesive: 3M Stud Locking Part No. 4170 or equivalent

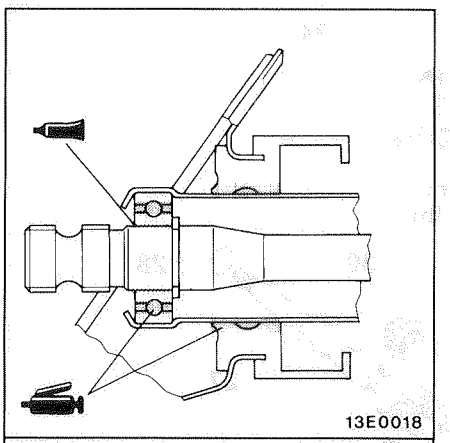

13E0018

Adhesive: 3M Stud Locking Part No. 4170 or equivalent

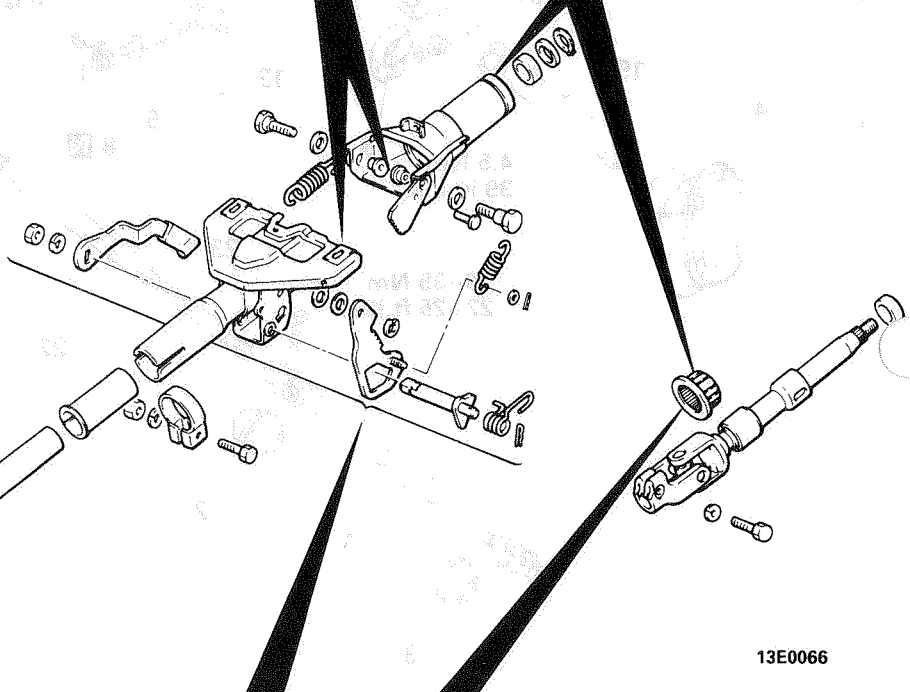

13E0066

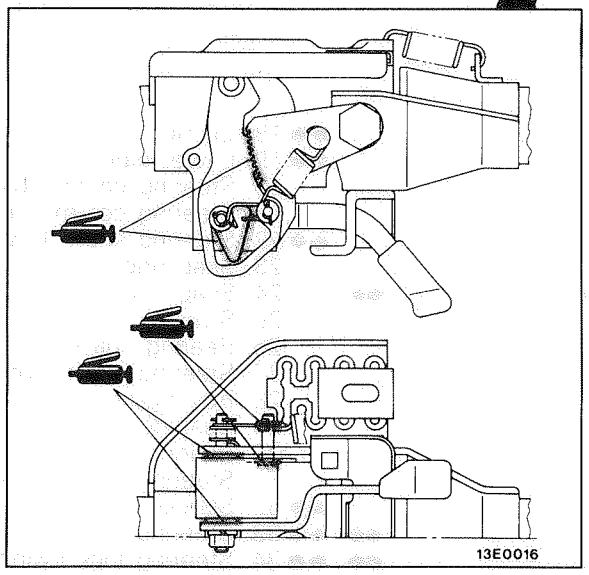

13E0016

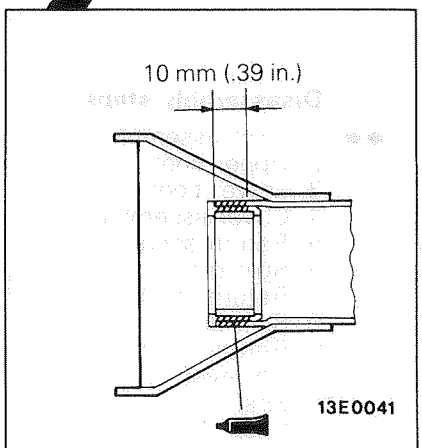

13E0041

Adhesive: 3M ATD Part No. 8001 or equivalent

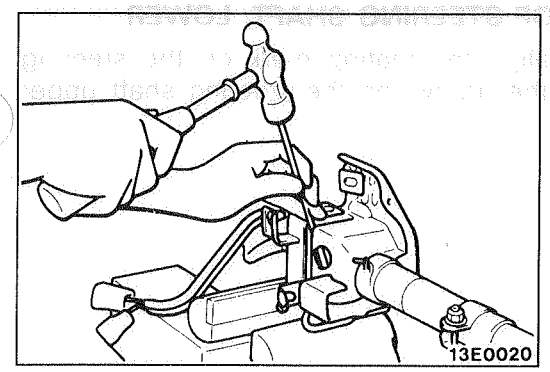

SERVICE POINTS OF DISASSEMBLY M37GFAU

17. REMOVAL OF CLEVIS PIN

Knock the clevis pin out from the inside of the steering column.

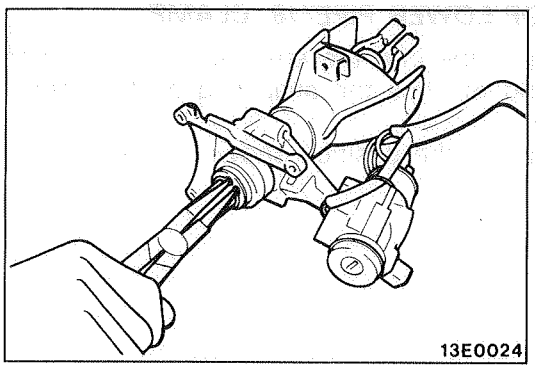

24. REMOVAL OF SNAP RING

Using the snap ring pliers, remove the snap ring from steering shaft upper and extract steering shaft upper from the bottom of steering column upper.

NOTE
Release the steering lock to extract steering shaft upper.

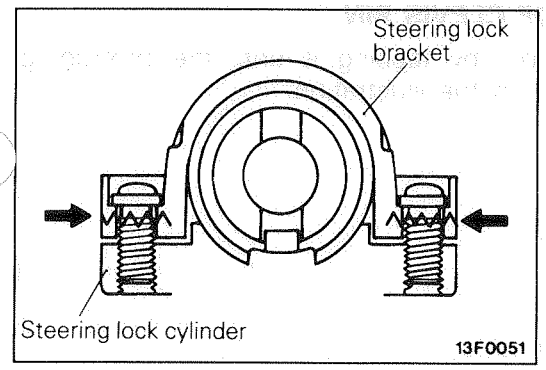

33. REMOVAL OF STEERING LOCK BRACKET/34. STEERING LOCK CYLINDER

If it is necessary to remove the steering lock cylinder, use a hacksaw to cut the special bolts at the steering lock bracket side.

INSPECTION M37GGAL

- Check the steering shaft for play and round movement.
- Check the joints for play, damage, or rough movement.
- Check the boots and cover assembly for damage.

SERVICE POINTS OF REASSEMBLY M37GHBG

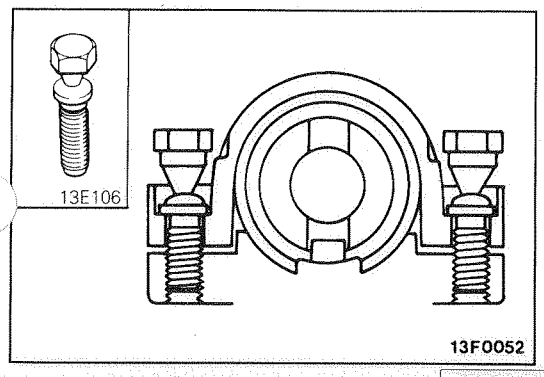

34. INSTALLATION OF STEERING LOCK CYLINDER/33. STEERING LOCK BRACKET/32. SPECIAL BOLT

(1) When installing the steering lock and steering lock bracket to the column tube, temporarily install the steering lock in alignment with the column boss.
(2) After checking that the lock works properly, tighten the special bolts until the head twists off.

Caution
The steering lock bracket and bolts must be replaced with new ones when the steering lock is installed.

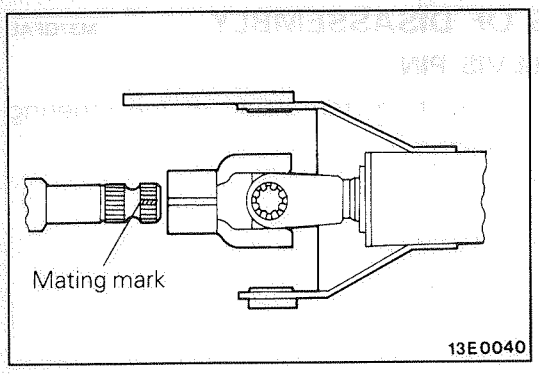

22. INSTALLATION OF STEERING SHAFT, LOWER

When installing, align the mating mark on the steering shaft lower with the groove on the steering shaft upper yoke.

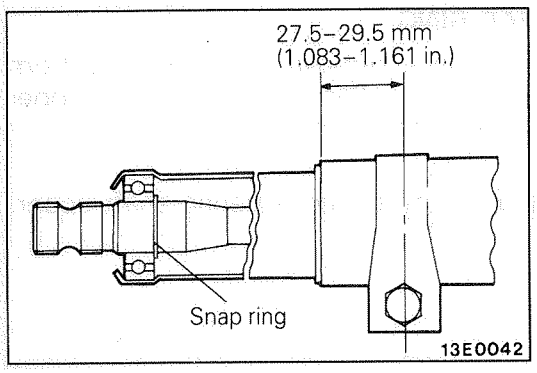

19. INSTALLATION OF LOWER PIPE/18. CLAMP

(1) Insert the lower pipe into the steering column lower until the bearing touches the snap ring on the steering shaft lower.
(2) Install the clamp in the position shown in the illustration.

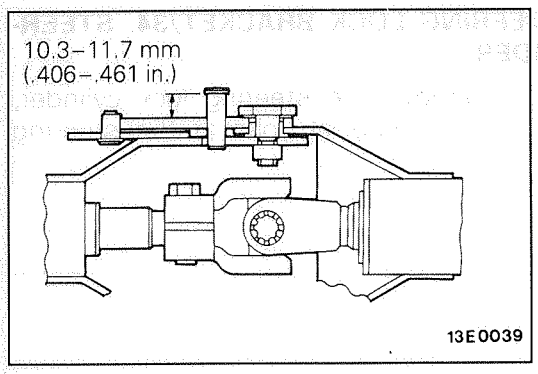

17. INSTALLATION OF CLEVIS PIN

Insert the clevis pin by tapping it until the protruding length is as shown in the illustration.

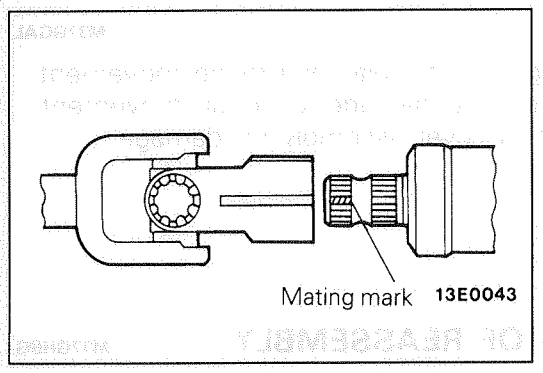

1. INSTALLATION OF JOINT ASSEMBLY

When installing, aling the groove on the joint yoke with the mating mark on the steering shaft lower.

POWER STEERING GEAR BOX

M37NA--

REMOVAL AND INSTALLATION

Pre-removal Operation
- Draining of the Power Steering Fluid (Refer to P.37-11.)

Pre-installation Operation
- Supplying of Power Steering Fluid (Refer to P.37-11.)
- Bleeding of the Power Steering Fluid Line (Refer to P.37-12.)

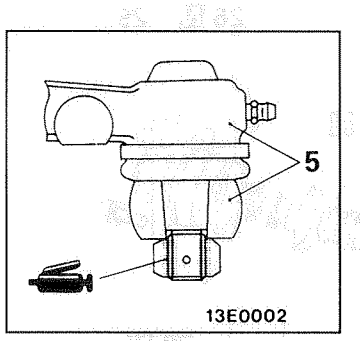

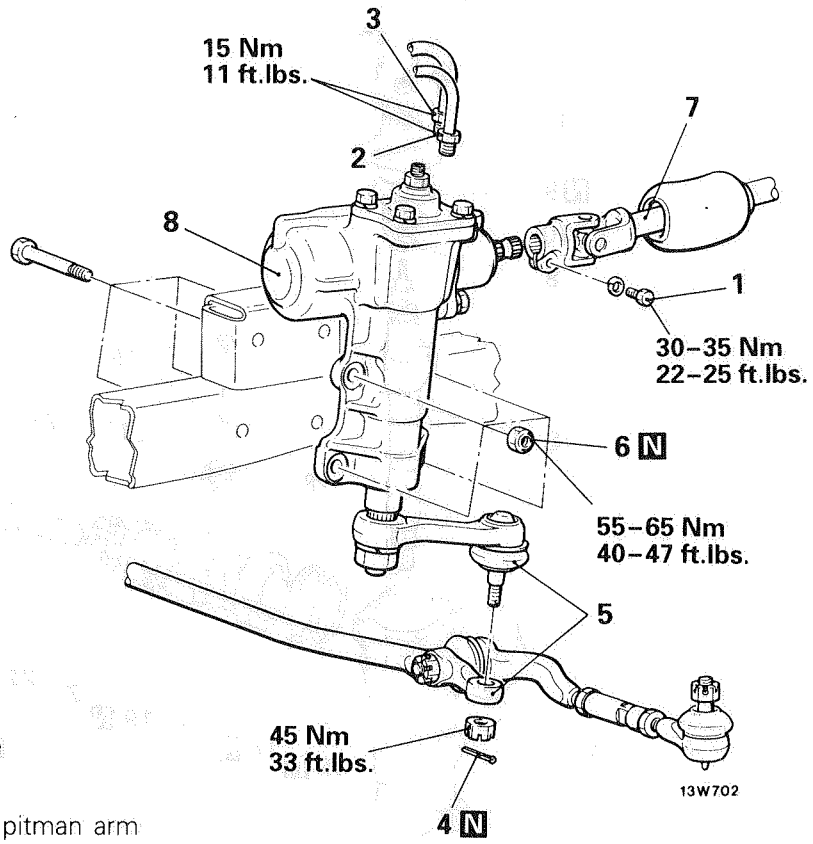

Removal steps

1. Bolt
2. Connection for pressure hose
3. Connection for return hose
4. Split pin
5. Connection for relay rod and pitman arm
6. Self-locking nuts
7. Connection for joint assembly
8. Power steering gear box

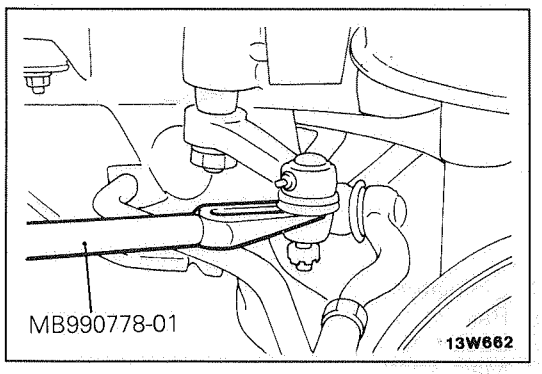

SERVICE POINTS OF REMOVAL

M37NBAH

5. DISCONNECTION OF RELAY ROD AND PITMAN ARM

Disconnect the pitman arm from the relay rod by using the special tool.

SERVICE POINTS OF INSTALLATION

M37NDAC

8. INSTALLATION OF POWER STEERING GEAR BOX

Install the power steering gear box to the frame after inserting the power steering gear box mainshaft into the joint assembly.

DISASSEMBLY

M37NE-A

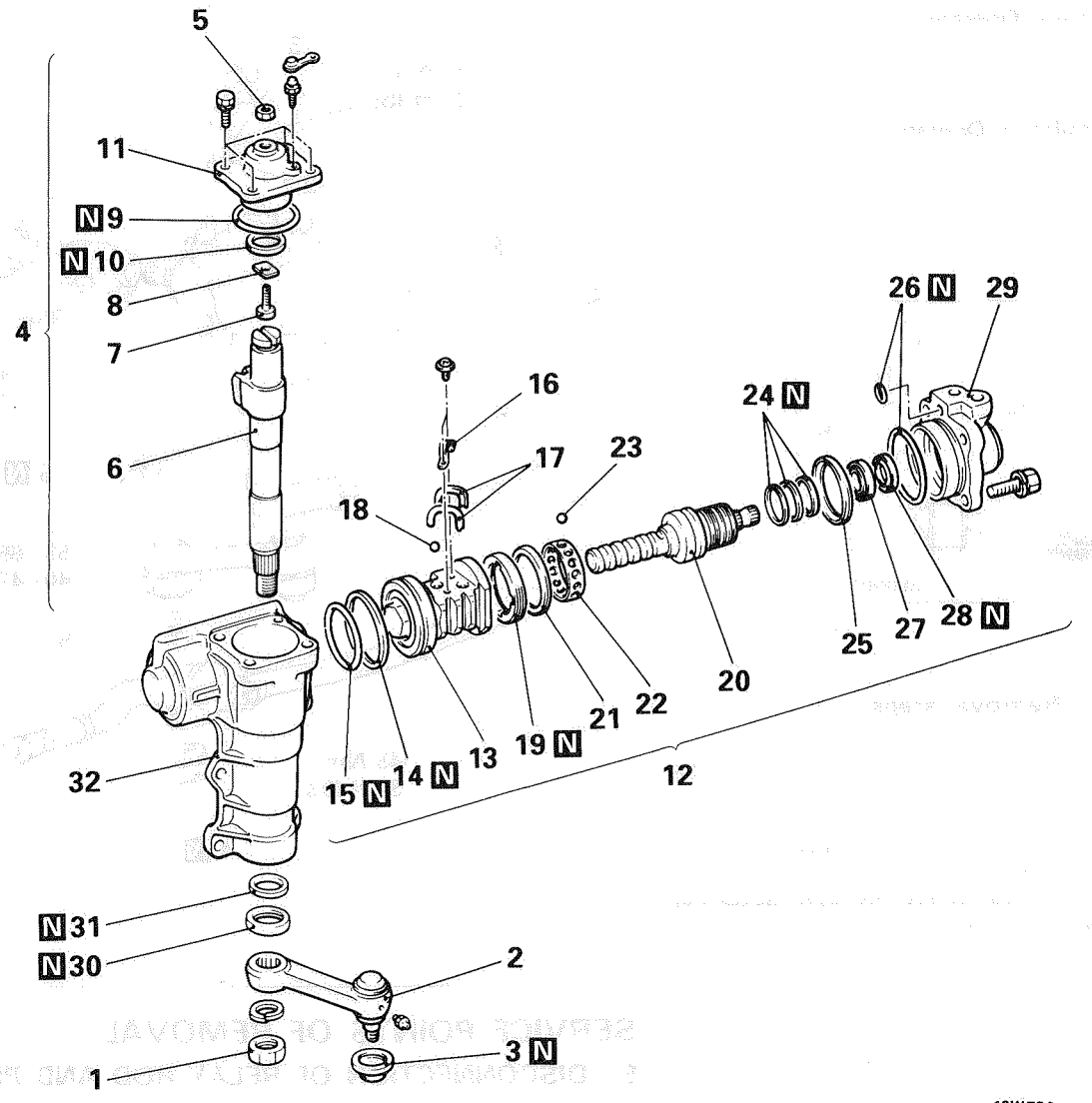

13W703

Disassembly steps

1. Jam nut
2. Pitman arm
3. Dust cover
4. Side cover and cross-shaft assembly
5. Adjusting bolt lock nut
6. Cross-shaft
7. Adjusting bolt
8. Adjusting plate
9. O-ring
10. Y-packing
11. Side cover
12. Main shaft and valve assembly
13. Rack piston
14. Seal ring
15. O-ring
16. Circulator holder
17. Circulator
18. Ball
19. Lock nut
20. Main shaft
21. Bearing race
22. Cage
23. Ball
24. Seal ring
25. Bearing race
26. O-ring
27. Bearing
28. Oil seal
29. Valve housing
30. Oil seal
31. Y-packing
32. Gear box housing

SERVICE POINTS OF DISASSEMBLY M37NFAH

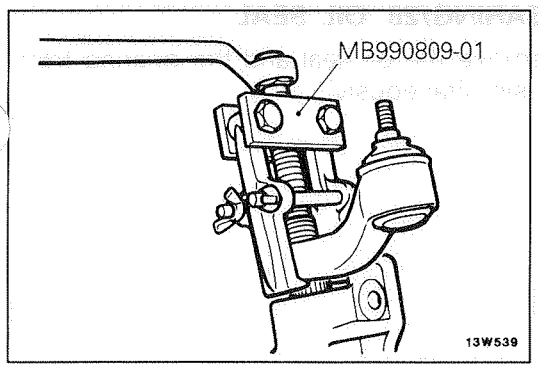

2. REMOVAL OF PITMAN ARM

Remove the pitman arm from the gear box assembly by using the special tool.

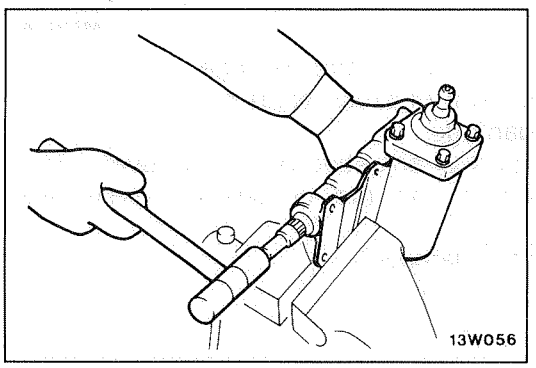

4. REMOVAL OF SIDE COVER AND CROSS-SHAFT ASSEMBLY

With the mainshaft and cross-shaft placed in the straight ahead position, tap the bottom of the cross-shaft with a plastic hammer to take out the cross-shaft together with the side cover.

10. REMOVAL OF Y-PACKING

Do not remove the Y-packing at the rear of the needle bearing unless there is fluid leakage from the threads of the adjusting bolt. If there is leakage, replace the Y-packing with a new one.

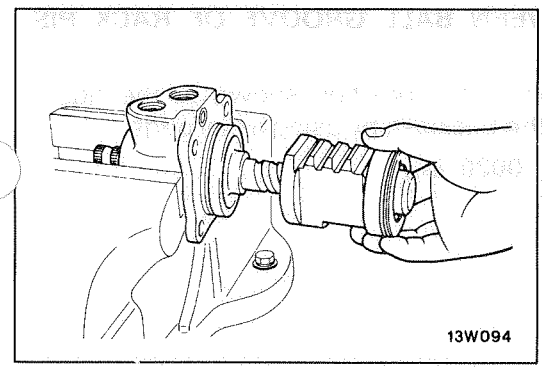

13. REMOVAL OF RACK PISTON

Remove the rack piston from the mainshaft by turning it counterclockwise.

Caution
Be careful not to lose the 26 balls inside the rack piston.

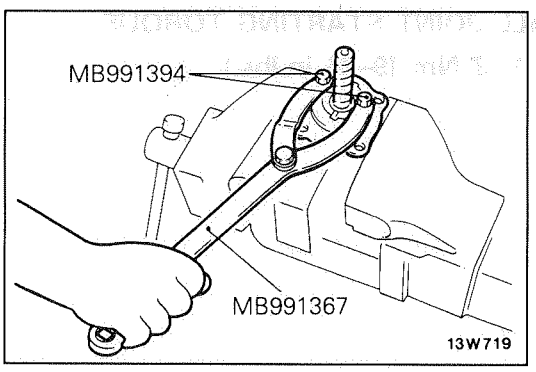

19. REMOVAL OF LOCK NUT

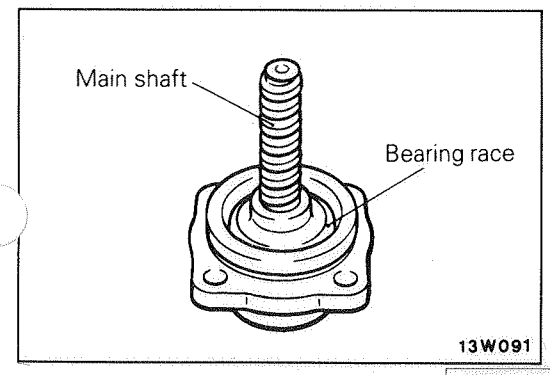

20. REMOVAL OF MAIN SHAFT/21. BEARING RACE/22. CAGE/23. BALL

When removing the main shaft, remove it while pressing the bearing race so that the balls do not come out.

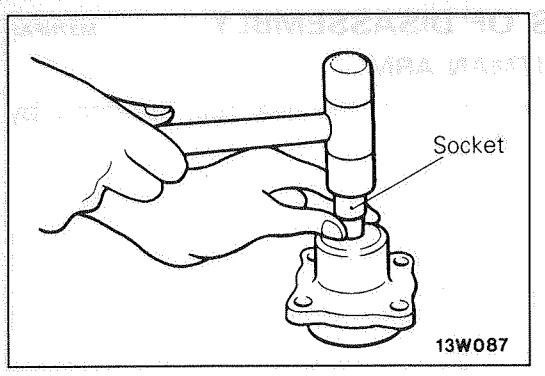

27. REMOVAL OF BEARING/28. OIL SEAL

Using a socket, remove the oil seal and the bearing from the valve housing simultaneously.

INSPECTION

M37NGAE

- Check the mainshaft for wear and damage.
- Check the tooth surface of cross shaft and the rack piston for wear and damage.
- Check the contact part of adjusting bolt for uneven wear.
- Check the dust cover and the oil seal for wear and damage.
- Check the O-rings for damage.

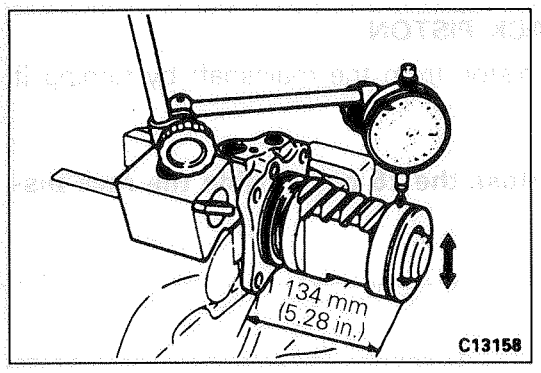

1. BACKLASH BETWEEN BALL GROOVE OF RACK PISTON AND BALLS

Set the rack piston to the position shown in the figure, and then measure the backlash by using a dial gage.

Limit: 0.05 mm (.0020 in.)

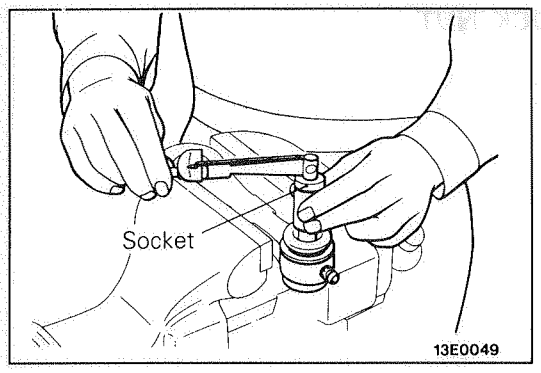

2. PITMAN ARM BALL JOINT STARTING TORQUE

Standard value: 1–3 Nm (9–26 in.lbs.)

REASSEMBLY

M37NE-B

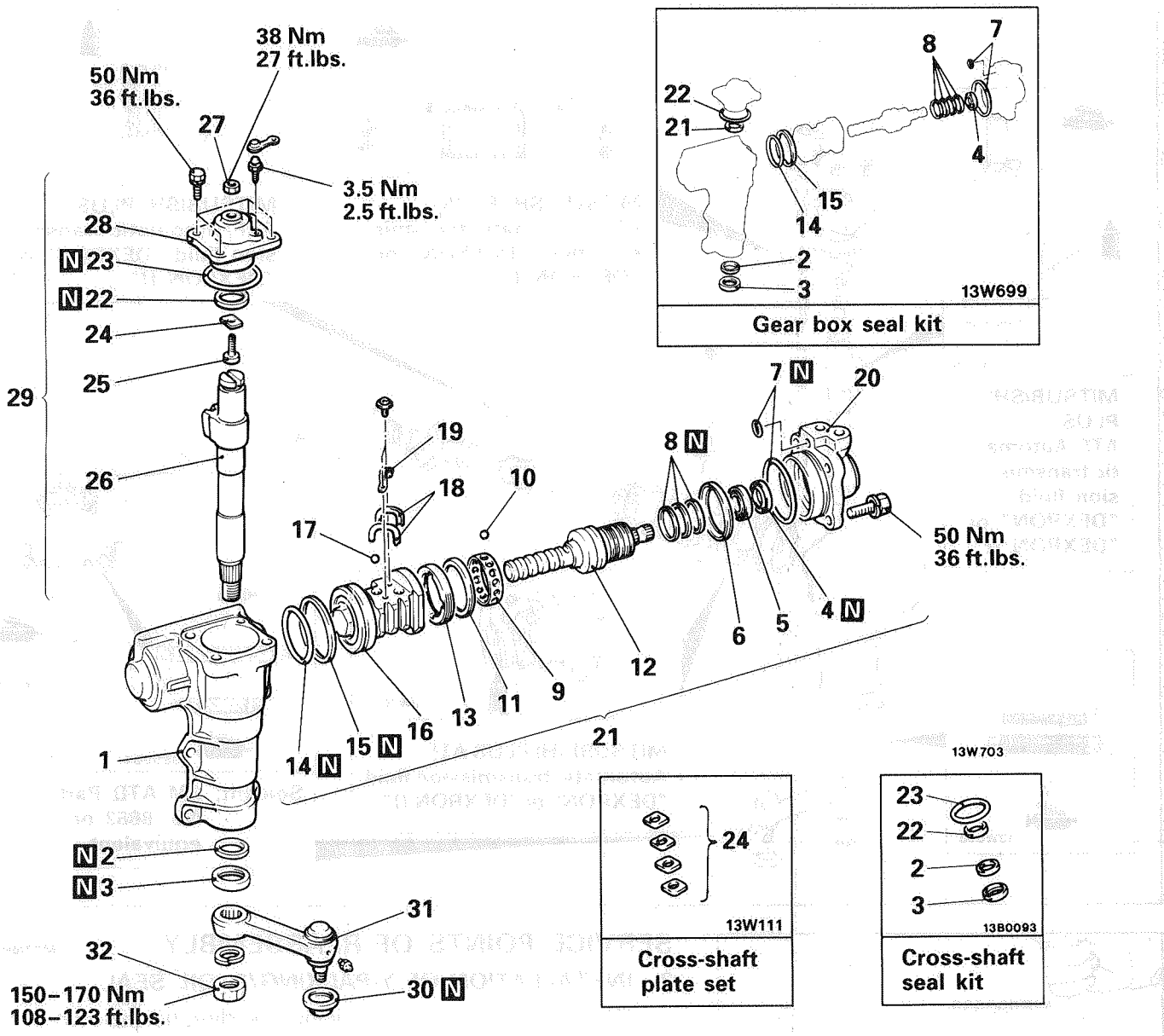

Reassembly steps

1. Gear box housing
2. Y-packing
3. Oil seal
4. Oil seal
5. Bearing
6. Bearing race
7. O-ring
8. Seal ring
9. Cage
10. Ball
11. Bearing race
12. Main shaft
13. Lock nut
    - Adjustment of main shaft end play
14. O-ring
15. Seal ring
16. Rack piston
17. Ball
18. Circulator
19. Circulator holder
20. Valve housing
21. Main shaft and valve assembly
22. Y-packing
23. O-ring
24. Adjusting plate
25. Adjusting bolt
26. Cross-shaft
27. Adjusting bolt lock nut
28. Side cover
29. Side cover and cross-shaft assembly
    - Adjustment of main shaft total starting torque
30. Dust cover
31. Pitman arm
32. Jam nut

LUBRICATION AND SEALING POINTS

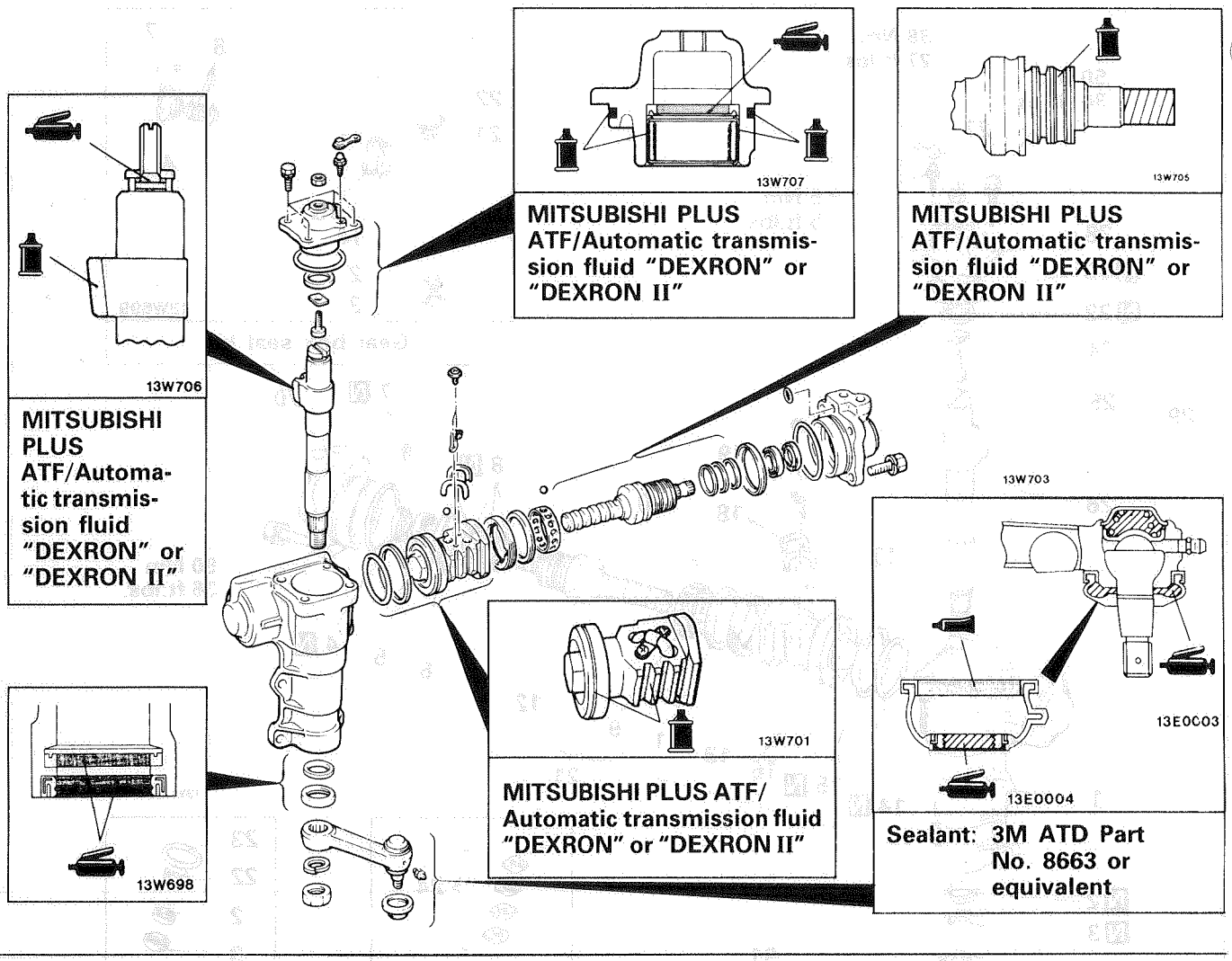

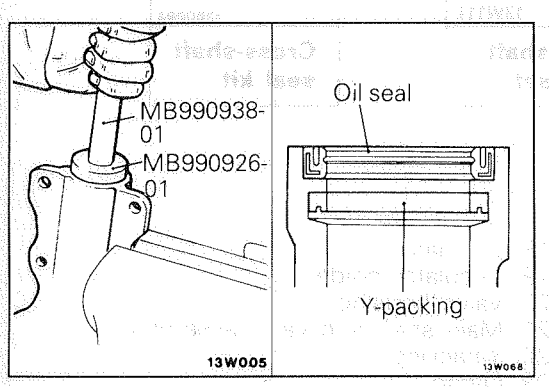

SERVICE POINTS OF REASSEMBLY M37NHAK

2. INSTALLATION OF Y-PACKING/3. OIL SEAL

(1) Install the Y-packing facing the direction shown in the illustration.

(2) Use the special tool to press-fit the oil seal to the gearbox housing so that it faces in the direction shown in the illustration.

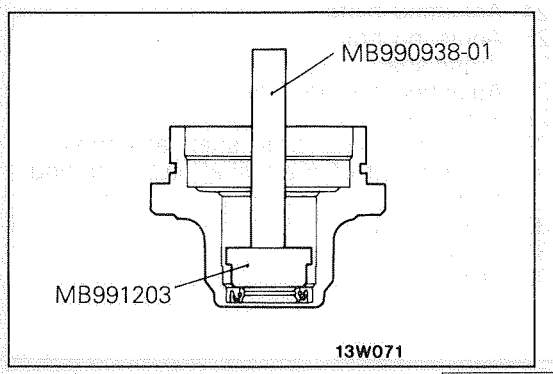

4. INSTALLATION OF OIL SEAL

Apply a coating of the specified fluid to the outside of the oil seal. Using the special tools, press the oil seal into the valve housing.

Specified fluid: MITSUBISHI PLUS ATF/Automatic transmission fluid "DEXRON" or "DEXRON II"

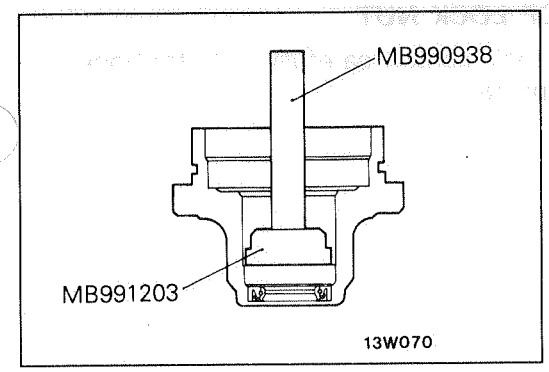

5. INSTALLATION OF BEARING

Apply a coating of the specified fluid to the outside of the bearing. Using the special tools, press the oil seal into the valve housing.

Specified fluid: MITSUBISHI PLUS ATF/Automatic transmission fluid "DEXRON" or "DEXRON II"

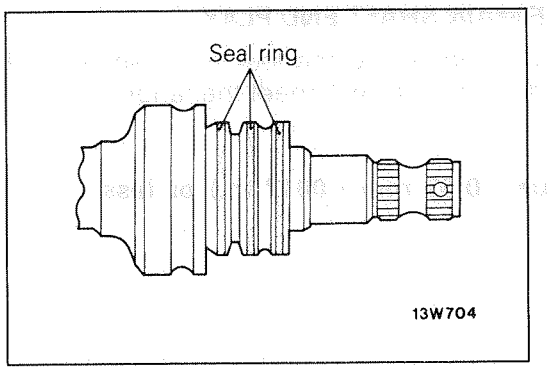

8. INSTALLATION OF SEAL RING

When installing seal ring, press firmly into valve groove.

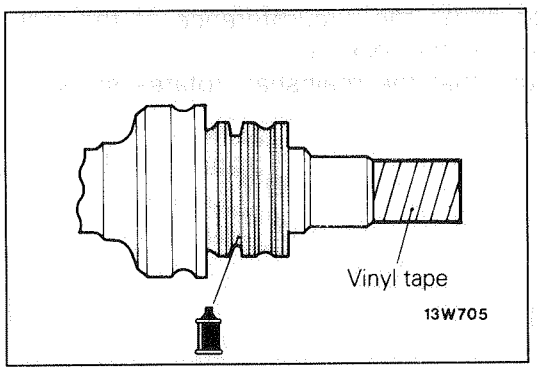

9. INSTALLATION OF CAGE/10. BALL/11. BEARING RACE/12. MAIN SHAFT

(1) Apply specified fluid to valve body.

Specified fluid: MITSUBISHI PLUS ATF/Automatic transmission fluid "DEXRON" or "DEXRON II"

(2) Wrap vinyl tape around the serrated part so that the oil seal won't be damaged when the valve body is installed to the valve housing.

(3) Mount the valve body to the valve housing.

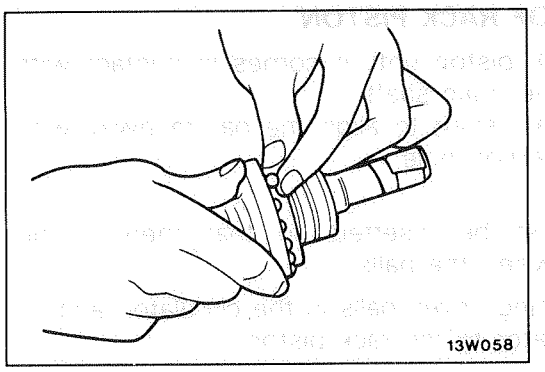

(4) Align the cage's hole and the channel in the main shaft, and insert two or three balls.

(5) Insert the remainder of the balls into the cage's hole while pressing the ball with the bearing race.

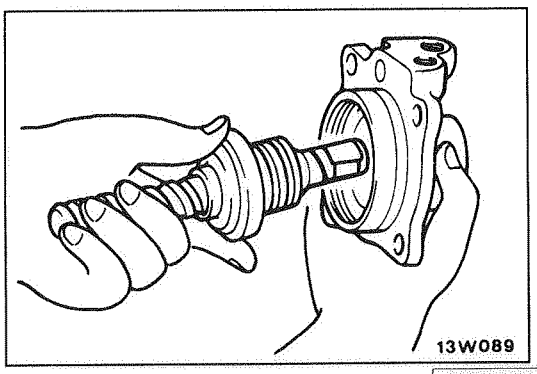

(6) When installing the main shaft, connect it to the valve housing while pressing the bearing race so that the balls do not come out.

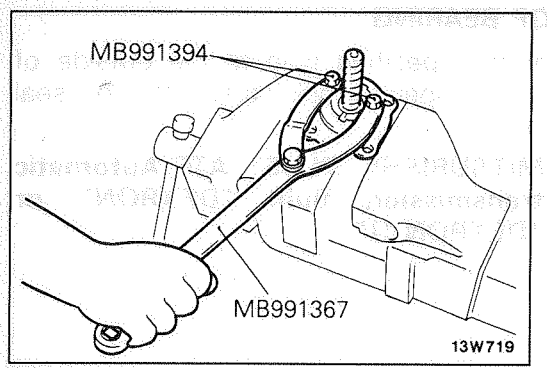

13. INSTALLATION OF LOCK NUT

Using the special tool, tighten carefully until the lock nut contacts the bearing race.

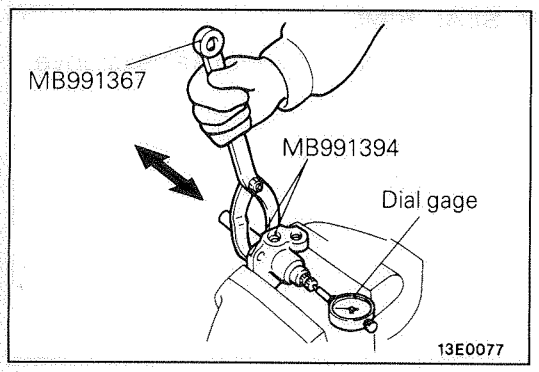

- **ADJUSTMENT OF MAIN SHAFT END PLAY**

(1) Adjust the play by tightening the lock nut gradually so that the mainshaft end play will meet the range of standard value.

Standard value: 0.03 mm (.0012 in.) or less

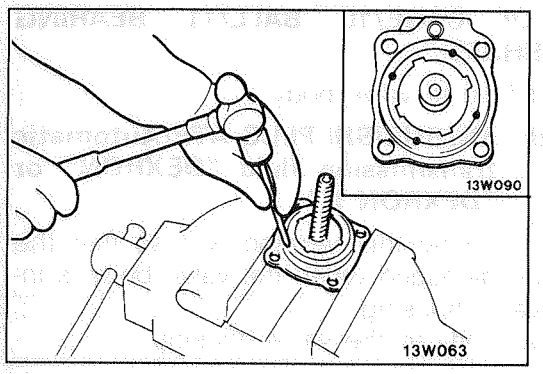

(2) Use a punch to crimp the circumference of the lock nut so as to secure the lock nut.
(3) Check to be sure that the mainshaft rotates smoothly.

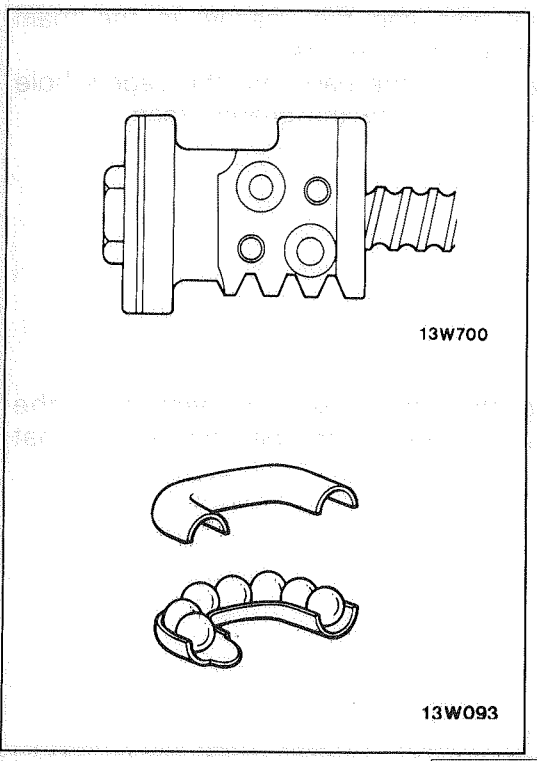

16. INSTALLATION OF RACK PISTON

(1) Install the rack piston until it comes in contact with the edge of the main shaft.
(2) Rotate the main shaft to align the ball raceway with the 19-ball insertion hole.

NOTE
The balls must be inserted so that there is no clearance between the balls.

(3) Set the remaining seven balls in the circulator, and install the circulator to the rack piston.

20. INSTALLATION OF VALVE HOUSING

(1) Apply specified automatic transmission fluid to the seal ring of the rack piston.

Specified fluid: MITSUBISHI PLUS ATF/Automatic transmission fluid "DEXRON" or "DEXRON II"

(2) Insert the valve housing.
(3) Rotate the main shaft until the rack piston moves to the neutral position (center).

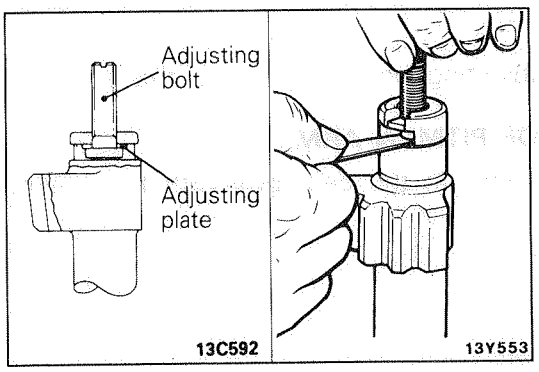

24. INSTALLATION OF ADJUSTING PLATE/25. ADJUSTING BOLT

(1) Install the adjusting plate so that the beveled part is facing downward.
(2) Using a feeler gage, measure the clearance between the adjusting bolt and cross-shaft.

Standard value: 0–0.05 mm (0–.002 in.)

(3) If the clearance is exceeded the standard value, replace with a suitable adjusting plate.

26. INSTALLATION OF CROSS-SHAFT/27. ADJUSTING BOLT LOCK NUT

Install the cross-shaft to the side cover, and then temporarily tighten the adjusting bolt lock nut.

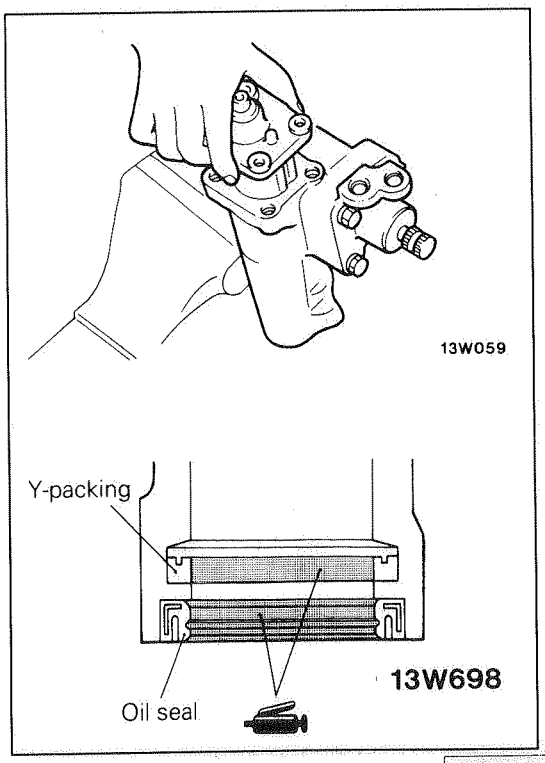

29. INSTALLATION OF SIDE COVER AND CROSS-SHAFT ASSEMBLY

Install the side cover assembly (with the cross-shaft) to the gear box.

NOTE
Apply specified automatic transmission fluid to the teeth and shaft areas of the rack piston, and apply multipurpose grease to the oil seal lip.

Specified fluid: MITSUBISHI PLUS ATF/Automatic transmission fluid "DEXRON" or "DEXRON II"

Caution
Do not rotate the side cover during installation. Take care not to damage the cross-shaft oil seal.

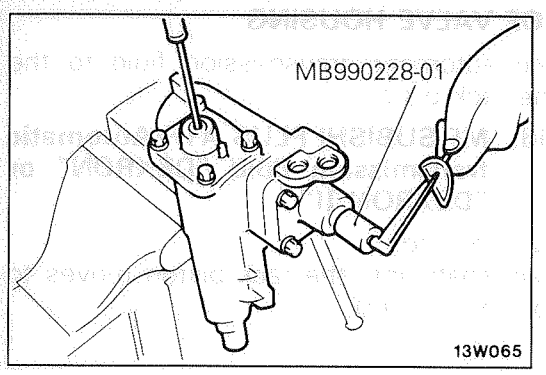

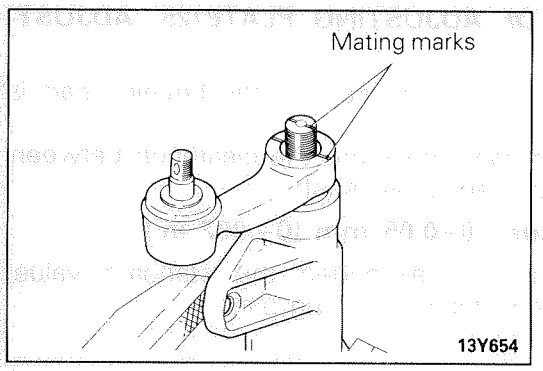

- **ADJUSTMENT OF MAIN SHAFT TOTAL STARTING TORQUE**

(1) While turning the adjusting bolt, measure the main shaft total starting torque by using the special tool.

Standard value: 0.45–1.25 Nm (4–11 in.lbs.)

Caution
Adjust by turning the adjusting bolt so that the starting torque at the center position of the rack piston is approximately 0.2 Nm (2 in.lbs.) higher than the values at the both ends of the rack piston.

(2) Tighten the adjusting bolt lock nut to the specified torque.

31. INSTALLATION OF PITMAN ARM

Install the pitman arm to the gear box with the mating marks aligned.

POWER STEERING OIL PUMP

M37RA--

REMOVAL AND INSTALLATION

Pre-removal Operation
- Draining of the Power Steering Fluid (Refer to P.37-11.)

Post-installation Operation
- Supplying of the Power Steering Fluid (Refer to P.37-11.)
- Adjusting V-belt Tension (Refer to P.37-11.)
- Bleeding of the Power Steering Fluid Line (Refer to P.37-12.)
- Check the Oil Pump Pressure (Refer to P.37-13.)

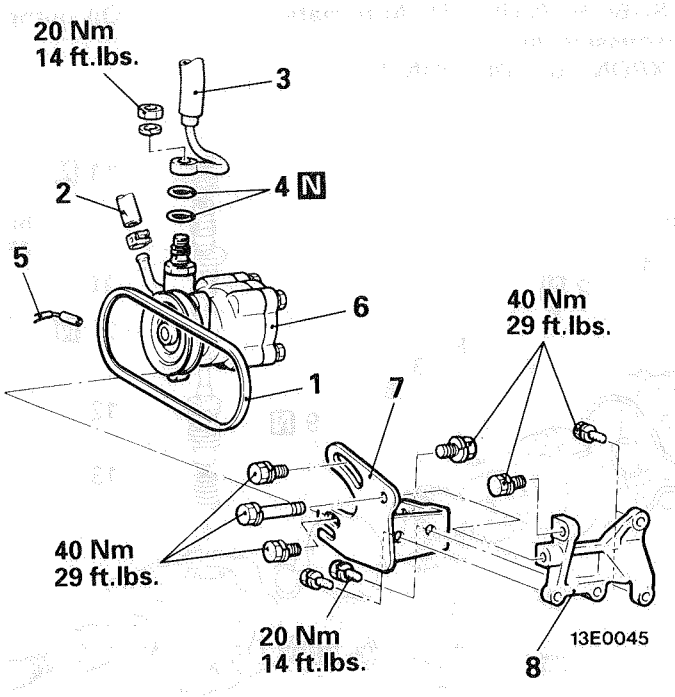

Removal steps

1. V-belt
2. Suction hose
3. Pressure hose
4. O-ring
5. Pressure switch connector <A/T>
6. Oil pump
7. Oil pump bracket
8. Oil pump mounting bracket

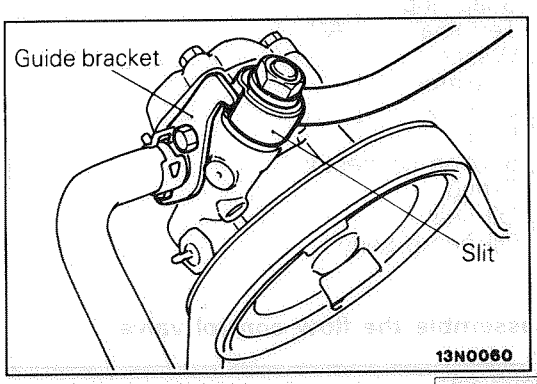

SERVICE POINTS OF INSTALLATION

M37RDAM

3. INSTALLATION OF PRESSURE HOSE

Connect the pressure hose so that its slit part contacts the oil pump's guide bracket.

TSB Revision

DISASSEMBLY AND REASSEMBLY

M37RE--

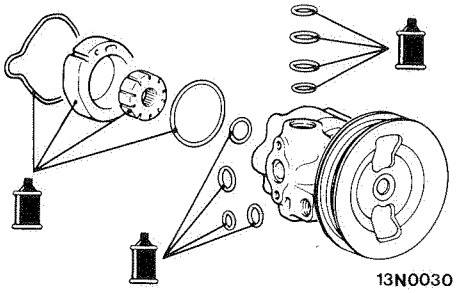

Fluid: MITSUBISHI PLUS ATF/Automatic transmission fluid "DEXRON" or "DEXRON II"

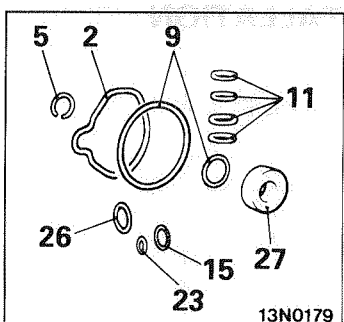

Oil pump seal kit

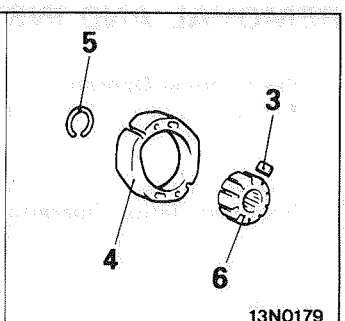

Oil pump cartridge kit

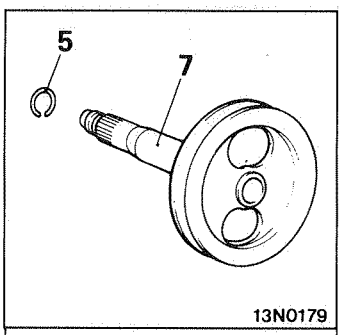

Pulley and shaft kit

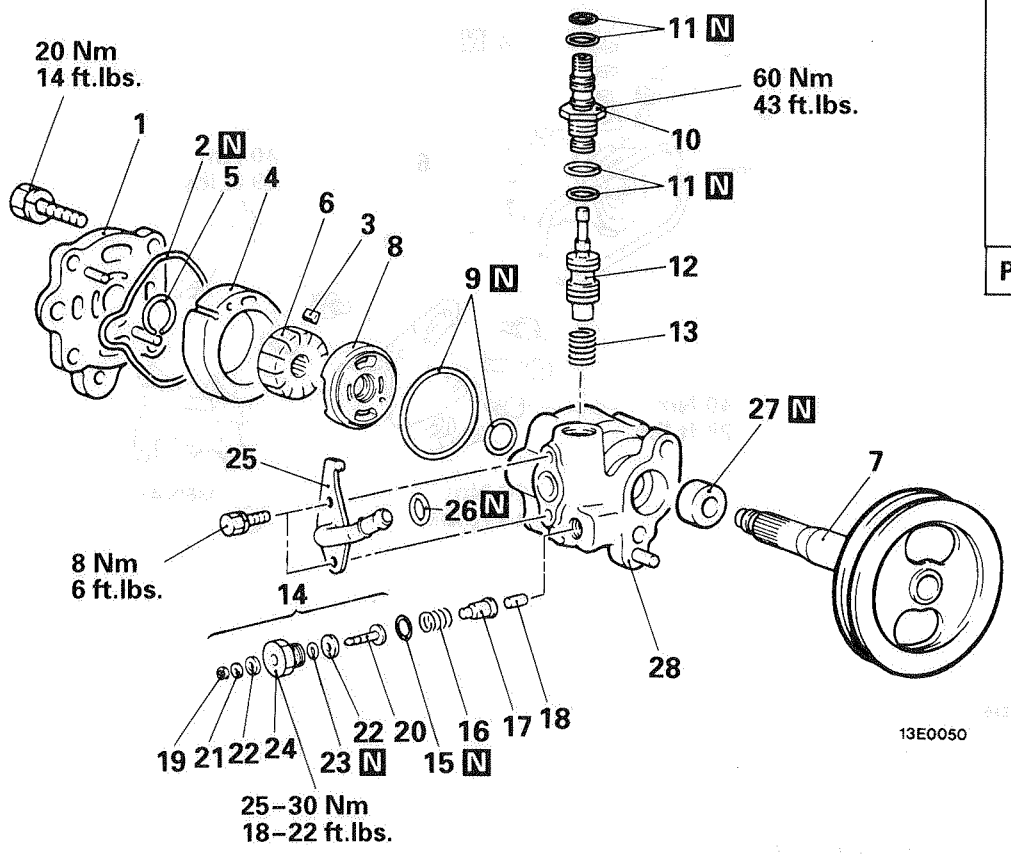

Disassembly steps

1. Pump cover
2. O-ring
3. Vanes
4. Cam ring
5. Snap ring
6. Rotor
7. Pulley assembly
8. Side plate
9. O-ring
10. Connector
11. O-ring
12. Flow control valve
13. Flow control spring
14. Terminal assembly
15. O-ring

(A/T)

16. Spring
17. Plunger
18. Piston rod
19. Snap ring
20. Terminal
21. Washer
22. Insulator
23. O-ring
24. Plug

(A/T)

25. Suction connector
26. O-ring
27. Oil seal
28. Oil pump body

Caution
Do not disassemble the flow control valve.

TSB Revision

INSPECTION

M37RGAL

- Check the flow control valve for clogging.
- Check the pulley assembly for wear or damage.
- Check the groove of rotor and vane for "Stepped" wear.
- Check the contact surface of cam ring and vanes for "Stepped" wear.
- Check the vanes for damage.

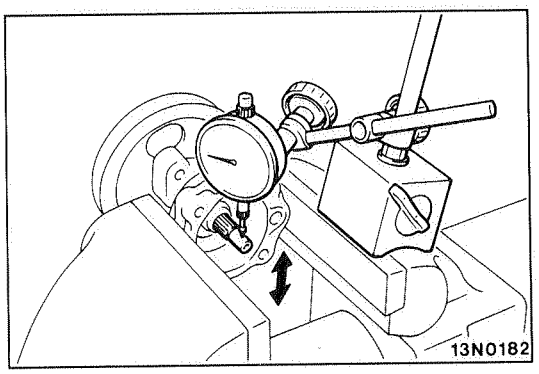

CLEARANCE BETWEEN SHAFT AND PUMP BODY

(1) Place the dial gage against the end of the pulley assembly's shaft.
(2) Move the pulley assembly up and down and measure the play.

Limit: 0.1 mm (.004 in.)

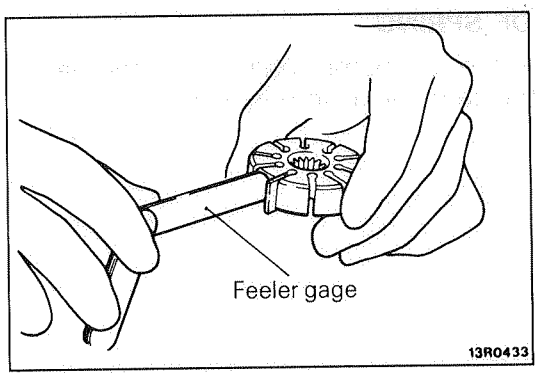

GAP BETWEEN VANE AND ROTOR GROOVE

Limit: 0.06 mm (.0024 in.)

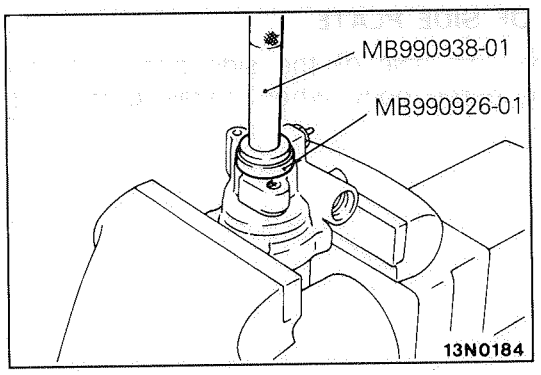

SERVICE POINTS OF REASSEMBLY

M37RHBJ

27. INSTALLATION OF OIL SEAL

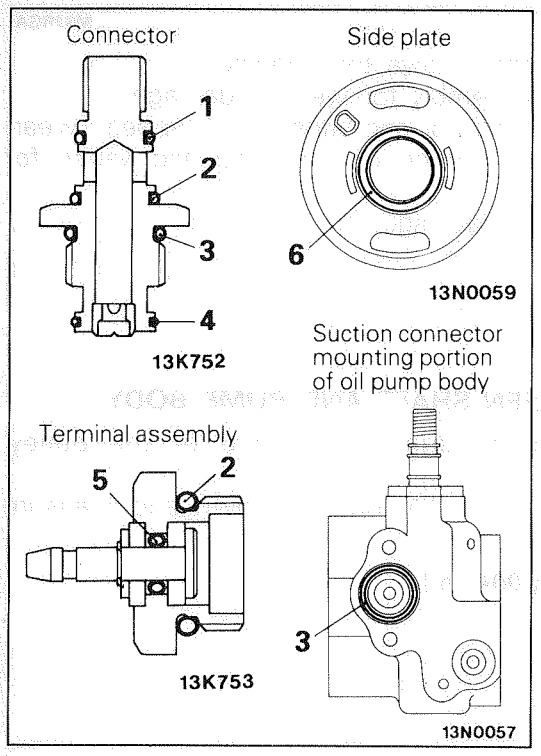

26./23./15./11./9. INSTALLATION OF O-RINGS

Apply specified fluid on O-rings to install.

No.	I.DxWidth mm (in.)
1	11x1.9 (.433x.075)
2	13x1.9 (.512x.075)
3	17.8x2.4 (.701x.094)
4	13.5x1.5 (.531x.059)
5	3.8x1.9 (.150x.075)
6	16.8x2.4 (.661x.094)

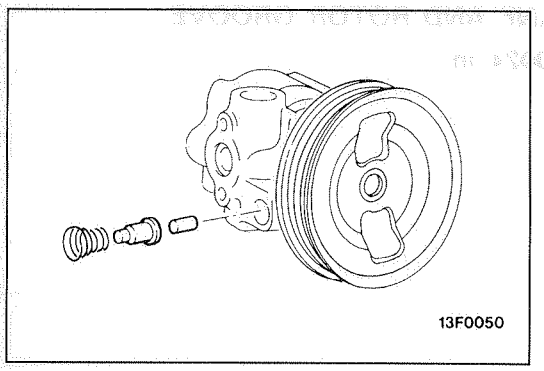

16. INSTALLATION OF SPRING

Fit the spring to the oil pump body with the larger-diameter end at the terminal assembly side.

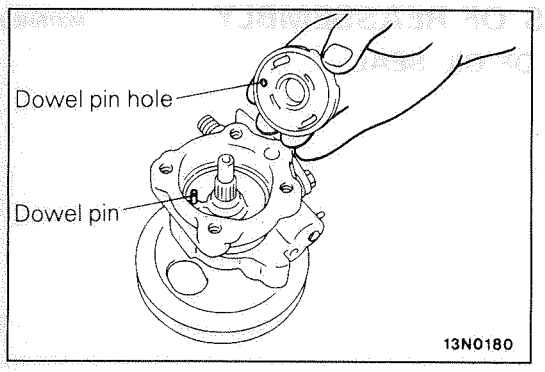

8. INSTALLATION OF SIDE PLATE

Line up the dowel pin hole of the side plate with the dowel pin of the pump body when installing the side plate.

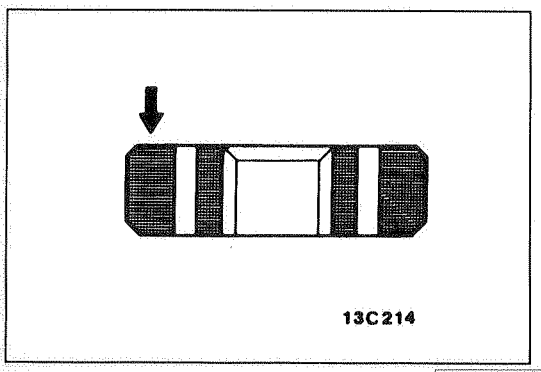

6. INSTALLATION OF ROTOR

Install the rotor to the pulley assembly so that the rotor's punch mark is at the pump cover side.

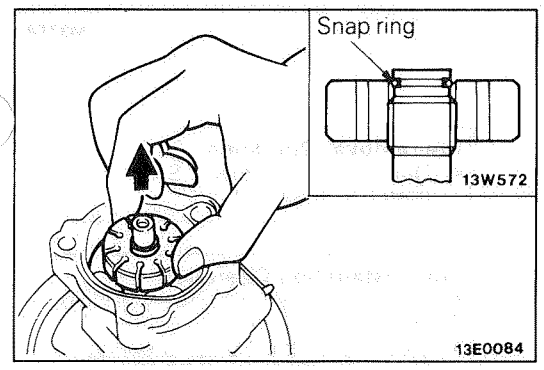

5. INSTALLATION OF SNAP RING

After installation of the snap ring, lift the rotor and check that the snap ring has entered the countersunk part.

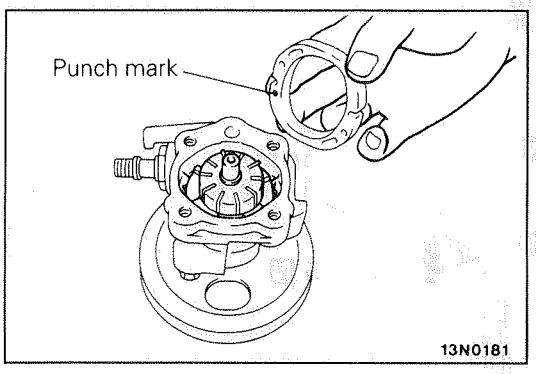

4. INSTALLATION OF CAM RING

Install the cam ring with the punch mark facing the side plate.

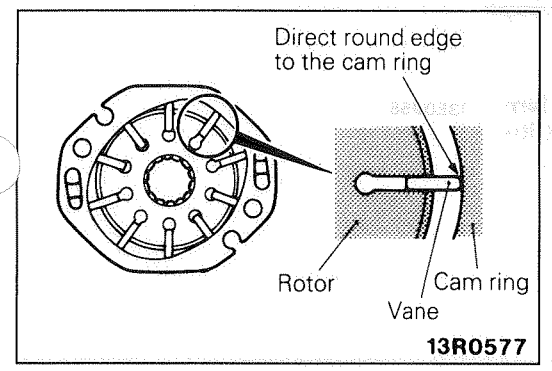

3. INSTALLATION OF VANES

Install the vanes on the rotor, paying close attention to the installation direction.

STEERING HOSES

M37TA--

REMOVAL AND INSTALLATION

Pre-removal Operation
- Draining of the Power Steering Fluid (Refer to P.37-11.)

Post-installation Operation
- Supplying of Power Steering Fluid (Refer to P.37-11.)
- Bleeding of the Power Steering Fluid Line (Refer to P.37-12.)

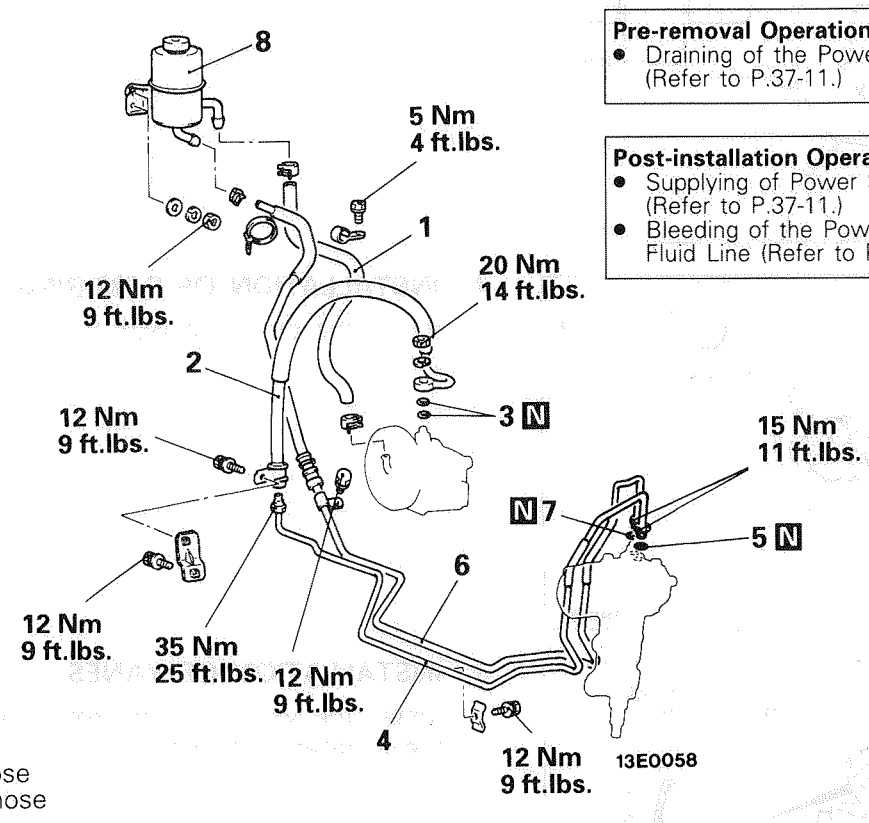

1. Suction hose
2. Pressure hose
3. O-ring
4. Pressure pipe
5. O-ring
6. Return pipe
7. O-ring
8. Oil reservoir

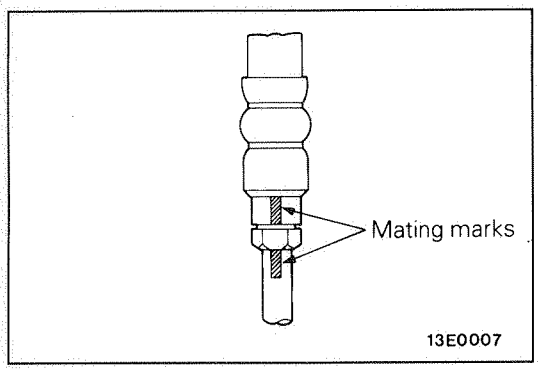

SERVICE POINT OF INSTALLATION

M37TDAH

4. INSTALLATION OF PRESSURE PIPE/2. PRESSURE HOSE

(1) Install so that the pressure pipe and pressure hose mating marks are aligned.

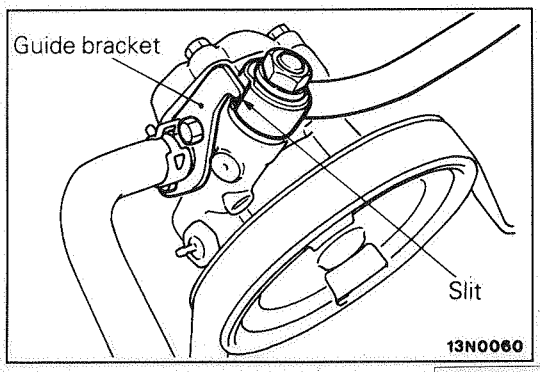

(2) Connect the pressure hose so that its slit part contacts the oil pump's guide bracket.

TSB Revision

STEERING LINKAGE

M37VA--

REMOVAL AND INSTALLATION

Post-installation Operation
- Adjustment of the Front Wheel Alignment (Toe-in)
  (Refer to GROUP 33–Service Adjustment Procedures.)

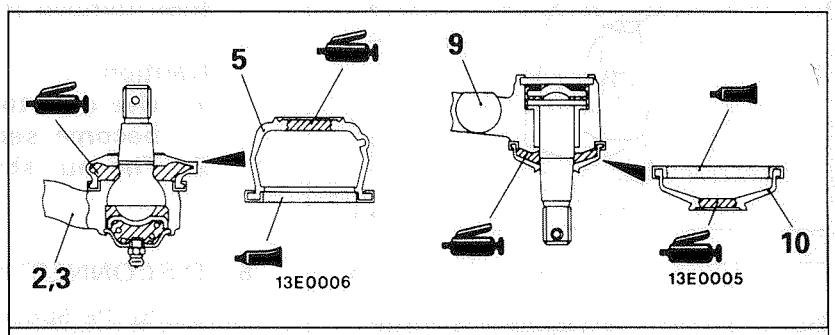

Sealant: 3M ATD Part No. 8663 or equivalent

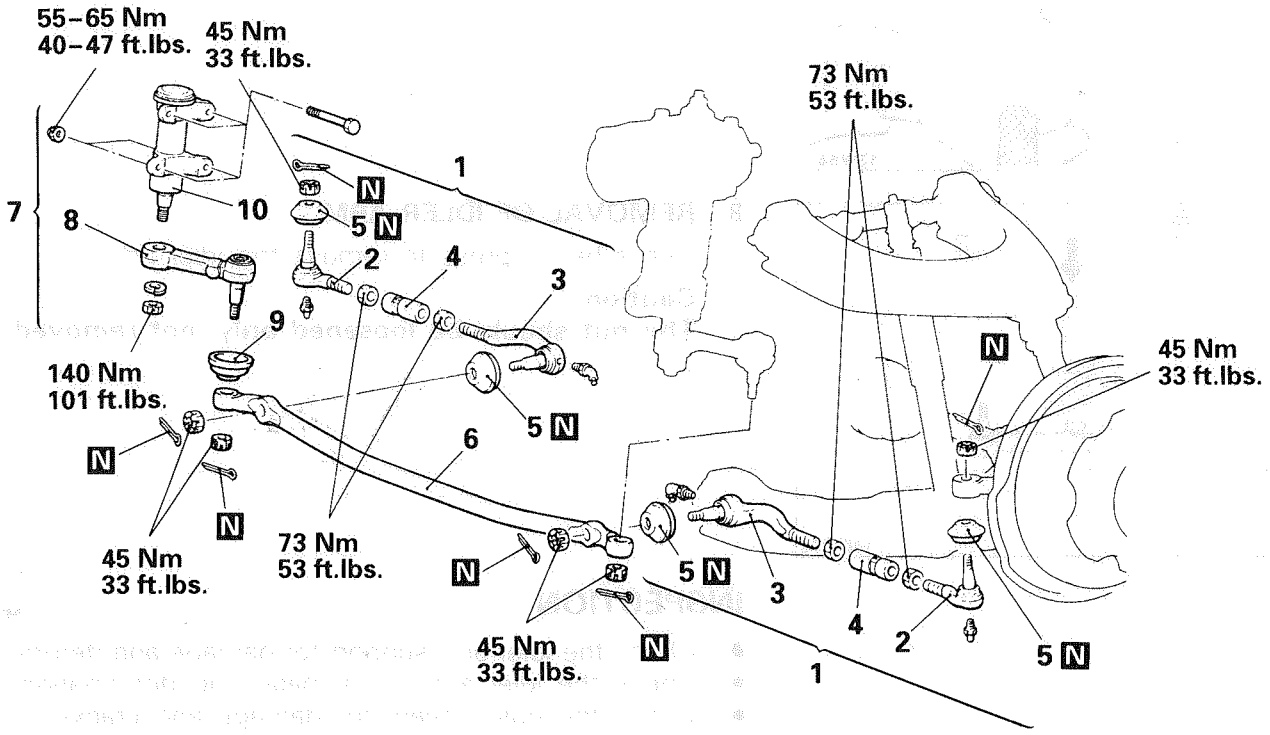

13E0073

Removal steps

- ◆◆ 1. Tie rod assembly
- ◆◆ 2. Tie rod end, outer
- ◆◆ 3. Tie rod end, inner
- ◆◆ 4. Pipe
- 5. Dust cover
- ◆◆ 6. Relay rod
- 7. Idler arm (complete)
- ◆◆ 8. Idler arm
- 9. Dust cover
- 10. Idler arm support

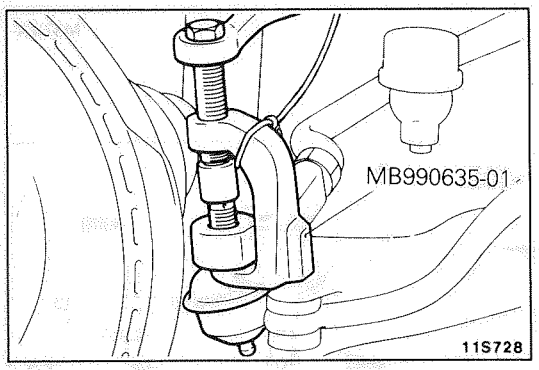

SERVICE POINTS OF REMOVAL M37VBAH

1. DISCONNECTION OF TIE ROD ASSEMBLY

Using the special tool, disconnect the tie rod ends, and then remove the tie rod assembly.

Caution
1. **Use cord to bind the special tool closely so it won't become separated.**
2. **The nut should be loosened only, not removed.**

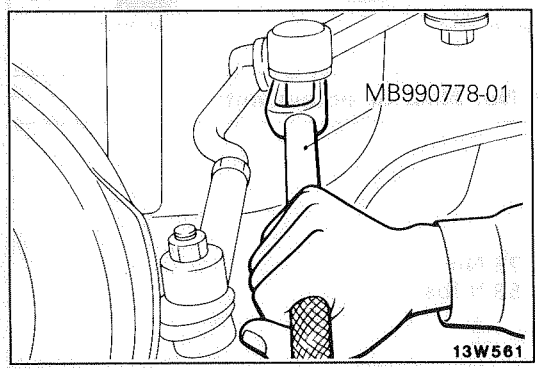

6. DISCONNECTION OF RELAY ROD

Using the special tool, disconnect the connecting portions of the idler arm and the steering gear box, and then remove the relay rod.

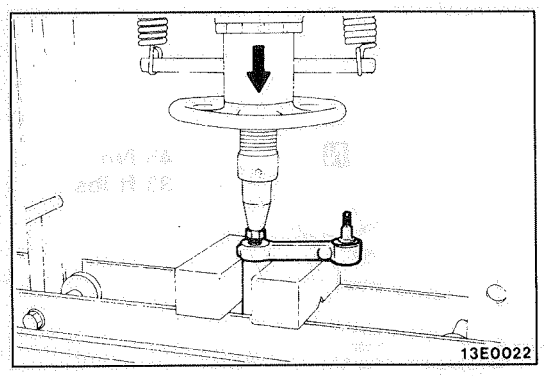

8. REMOVAL OF IDLER ARM

Use a bench press to remove the idler arm.

Caution
The nut should be loosened only, not removed.

INSPECTION M37VCAB

- Check the idler arm support for damage and deformation.
- Check the idler arm for damage and deformation.
- Check the dust covers for damage and cracks.
- Check the tie rods for damage and deformation.
- Check the relay rod for bends and damage.
- Check the grease nipples for clogging and looseness.

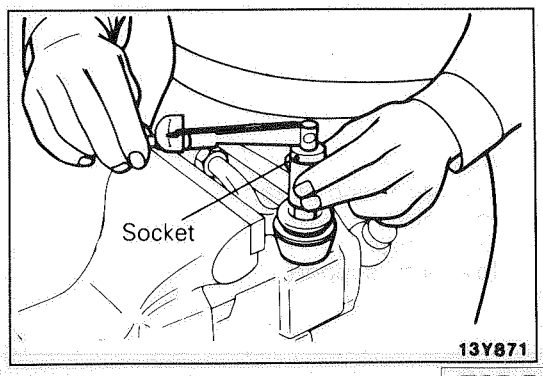

CHECKING BALL JOINT STARTING TORQUE

Standard value:
Tie rod end 1–3 Nm (9–26 in.lbs.)
Idler arm 0.5–2.0 Nm (4–17 in.lbs.)

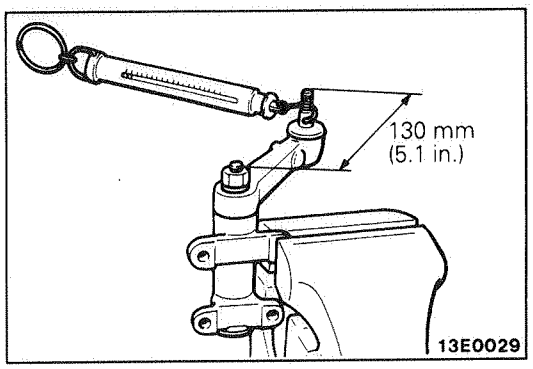

CHECKING IDLER ARM STARTING TORQUE

Standard value: 0.3–2.0 Nm (3–17 in.lbs.)
[2.3–15.4 N (.5–33.9 lbs.)]

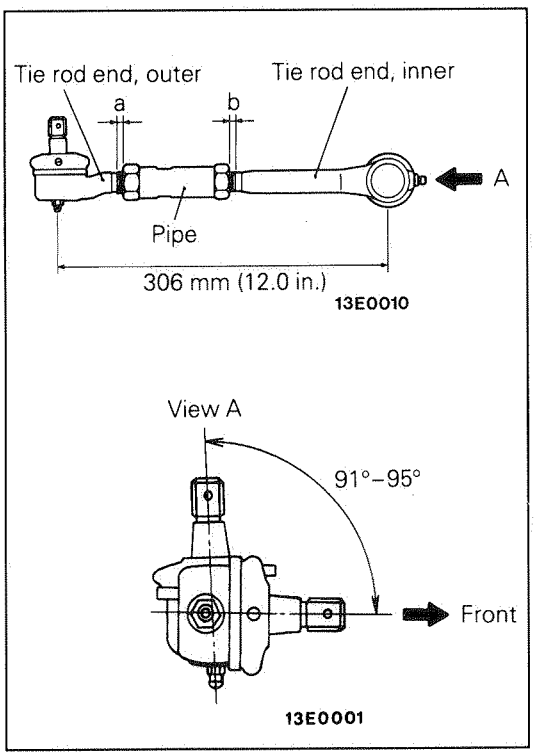

SERVICE POINTS OF INSTALLATION M37VDAB

4. INSTALLATION OF PIPE/3. TIE ROD END, INNER/2. TIE ROD END, OUTER

(1) Install the tie rod assembly so that the dimension is as shown in the diagram.

NOTE
The illustration at left shows the left-side tie rod assembly. The right-side tie rod assembly is symmetrical to the left-side assembly.

(2) Adjust the pipe so that the difference in dimensions a and b is 1.5 mm (.059 in.) or less, and then provisionally tighten the lock nut.

NOTE
Fully tighten the lock nut after the tie rod assembly is installed to the body and the toe-in has been adjusted.

NOTES

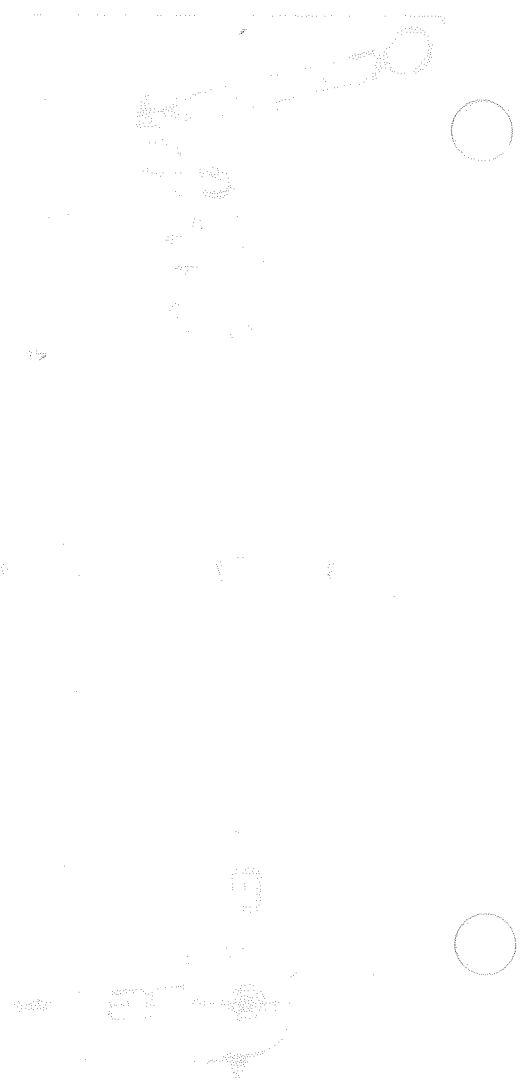

BODY

CONTENTS

M42AA--

BACK DOOR ASSEMBLY 43

BACK DOOR HANDLE AND LATCH 45

BACK DOOR TRIM AND WATERPROOF FILM 44

BACK DOOR WINDOW GLASS 29

BODY MOUNTING 19

DOOR ASSEMBLY 32

DOOR GLASS AND REGULATOR 36

DOOR HANDLE AND LATCH 39

DOOR TRIM AND WATERPROOF FILM 34

FENDER 22

FUEL FILLER DOOR 21

HOOD 20

QUARTER WINDOW GLASS 28

SERVICE ADJUSTMENT PROCEDURES 16
- Back Door Adjustment 17
- Door Inside Handle Play Adjustment 17
- Door Outside Handle Play Check 17
- Door Window Glass Adjustment 17
- Front and Rear Door Adjustment 16
- Fuel Filler Door Adjustment 16
- Hood Adjustment 16
- Water Test 18

SPECIAL TOOLS 4

SPECIFICATIONS 2
- General Specifications 2
- Sealants and Adhesives 3
- Service Specifications 3

SUNROOF 46

TROUBLESHOOTING 5
- Central Door Locking 11
- Hood, Glass, Doors and Sunroof 5
- How to Locate Wind Noises 7
- Power Window 8
- Sunroof 14

WINDOW GLASS 23

WINDOW GLASS RUNCHANNEL AND DOOR OPENING WEATHERSTRIP 42

WINDSHIELD 25

SPECIFICATIONS

GENERAL SPECIFICATIONS

M42CA--

Items		Specifications
Hood		
Type		Rear hinged, front opening type
Front door		
Construction		Front hinged, sash construction
Regulator system		Wire type
Locking system		Pin-fork type
Rear door		
Construction		Front hinged, sash construction
Regulator system		Wire type
Locking system		Pin-fork type
Back door		
Construction		Right hinged, sash construction
Locking system		Pin-fork type
Glass installation method		
Windshield glass		Adhesive type
Back door window glass		Adhesive type
Glass thickness		
Windshield glass	mm (in.)	5.3 (.21)
Quarter window glass	mm (in.)	4.0 (.16)
Front door glass	mm (in.)	3.5 (.14)
Rear door glass	mm (in.)	3.5 (.14)
Back door window glass	mm (in.)	3.5 (.14)
Sunroof glass	mm (in.)	5.0 (.20)
Frame type		Ladder type
Power window motor		
Type		Permanent magnet type (built-in circuit breaker)
Revolutions under no load	rpm	75 or more
Revolutions under load	rpm	
At 1 Nm (.72 ft.lbs.)		65–95
At 2 Nm (1.45 ft.lbs.)		50–80
Bound current	A	34 or less
Direction of rotation		Clockwise and anti-clockwise
Sunroof motor		
Type		DC ferrite (with built-in circuit breaker)
Speed at no load	rpm	155–195
Speed at load	rpm	
At 2 Nm (1.45 ft.lbs.)		110–150
Bound current	A	35 or less
Turning direction		Both clockwise and anti-clockwise

Items		Specifications
Power window relay		
Maximum contact current	A	20
Rated coil current	A	0.2 or less
Voltage drop between terminals (At 12 V and the rated load current)	V	0.3 or less
Door lock power relay		
Range of voltage used	V	8–16
Rated load current (at 13.5 V)	A	10
Rated coil current	A	0.2 or less
Voltage drop between terminals	V	0.2 or less
Front door lock actuator		
Bound current (at 12 V)	A	2.5–4.5
Operating voltage range	V	9–15
*Tripping time (at 12 V)	Second	5–30
Rear door lock actuator		
Bound current (at 12 V)	A	2.5–4.5
Operating voltage range	V	9–15
*Tripping time (at 12 V)	Second	5–30

NOTE
* Tripping time is the time consumed until current reaches 0.5 A after power connection.

SERVICE SPECIFICATIONS

M42CB--

Items		Standard value
Door inside handle play mm (in.)		4–10 (.16–.39)
Door outside handle play mm (in.)	Front and rear door	3–12 (.12–.47)
	Back door	2–8 (.08–.31)
Slipping force of motor clutch N (lbs.)		40–50 (9–11)
Sunroof sliding resistance N (lbs.)		200 (44)

SEALANTS AND ADHESIVES

M42CE--

Items	Specified sealant and adhesive
Screen drip Sunroof glass weatherstrip	3M ATD Part No. 8001 or 3M ATD Part No. 8011, or equivalent
Fender panel Splush shield Waterproof film	3M ATD Part No. 8625 or equivalent
Windshield glass Rear window glass	3M Super Fast Urethan Auto Glass sealant Part No. 8609 or equivalent
	3M Super Fast Urethan Primer Part No. 8608 or equivalent

Items	Specified sealant and adhesive
Sunroof glass weatherstrip	3M ATD Part No. 8513 or equivalent
	3M ATD Part No. 8509 or equivalent
Rail end cover	3M ATD Part No. 8531 or 3M ATD Part No. 8646, or equivalent

SPECIAL TOOLS

M42DA--

Tool	Number	Name	Use
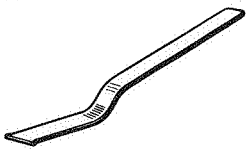	MB990449	Window moulding remover	Removal of the window moulding
	MB990900-01	Door adjusting wrench	Adjustment of door fit

TROUBLESHOOTING

M42EABD

HOOD, GLASS, DOORS AND SUNROOF

Symptom		Probable cause	Remedy
Hood	Improper closure	Striker and latch not properly aligned	Adjust the alignment
	Difficult locking and unlocking	Striker and latch not properly aligned	Adjust the alignment
	Uneven body clearance	Incorrectly installed hood or trunk lid	Adjust the installation of hood or the trunk lid
	Uneven height	Incorrect hood bumper or trunk lid bumper height	Adjust the hood bumper or the trunk lid bumper height
Window glass	Water leak through windshield	Defective seal	Fill sealant
		Defective body flange	Correct
	Water leak through door window glass	Incorrect window glass installation	Adjust position
		Gap at upper window glass	Adjust position
	Water leak through quarter window	Defective seal	Fill sealant
		Defective body flange	Correct
	Water leak through rear window	Defective seal	Fill sealant
		Defective body flange	Correct
Front/ rear/back doors	Door window malfunction	Incorrect window glass installation	Adjust position
		Damaged or faulty regulator	Correct or replace
	Water leak through door edge	Cracked or faulty weatherstrip	Replace
	Water leak from door center	Drain hole clogged	Remove foreign objects
		Inadequate waterproof film contact or damage	Correct or replace
	Door hand to open	Incorrect latch or striker adjustment	Adjust
	Door does not open or close completely	Incorrect door installation	Adjust position
		Defective door check strap	Correct or replace
		Door check strap and hinge required grease	Apply grease
	Uneven gap between body	Incorrect door installation	Adjust position
	Wind noise around door	Weatherstrip hot holding firmly	Adjust fit of door
		Improperly installed weatherstrip or setting of weatherstrip	Repair or replace
		Improperly closed door	Adjust
		Improperly fit door	Adjust

Symptom		Probable cause	Remedy
Front/ rear/back doors	Wind noise around door	Improper clearance between door glass and door weatherstrip holder	Adjust
		Deformed door	Repair or replace
Sunroof	Water leaks	Dust accumulated in drainage of housing assembly	Keep off dust from inside of drain hose
		Clogged drain hose	Blow air into drain hose to remove dust
		Broken or dislocated drain hose, failed or cracked clip	Check hose installation and flange contact
		Worm roof lid weatherstrip	Replace
		Excessive roof lid-to-body clearance and improperly fitted weatherstrip	Adjust
	Wind noise	Loose or deformed deflector	Retighten or replace
	Roof lid makes noise when moved	Foreign matter lodged in guide rail	Check drive cable and guide rails for foreign matter
		Loose guide rails and lid	Retighten
	Motor runs but lid does not move or moves only halfway	Foreign matter lodged in guide rail	Check drive cable and guide rails for foreign matter
		Incorrect engagement of motor pinion with drive cable	Check for loose motor installation and damaged pinion
		Decrease in clutch slipping force of motor	Adjust or replace
		Increased lid sliding resistance or interference of lid with drive cables, weatherstrip, etc. due to maladjustment of lid	Adjust or replace
	Noise in motor (Clutch slipping noise made in motor when lid is fully opened or closed is not unusual noise.)	Incorrect engagement of motor pinion with drive cable	Check pinion installation and retighten motor
		Worn or damaged motor pinion bearing	Replace motor assembly
		Worn or deformed drive cable	Replace

HOW TO LOCATE WIND NOISES

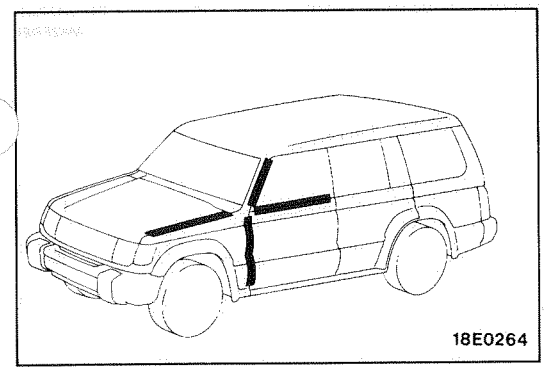

(1) Attach cloth tape to every place which might conceivably be the source of wind noise, such as panel seams, projections, moulding seams, glass and body seams, etc.
(2) Then make a road test in order to determine that the places not covered by tape are not sources of wind noise.

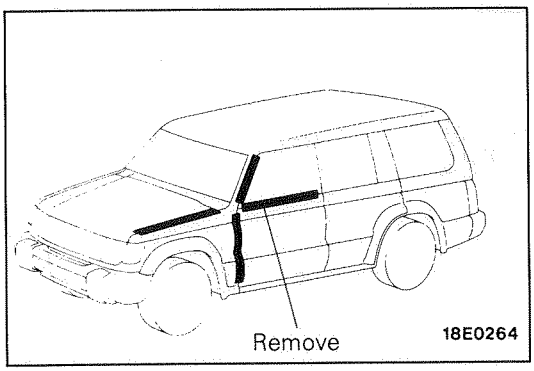

(3) Then remove the strips of tape one by one, making a road test after each is removed, until a wind noise source is discovered.

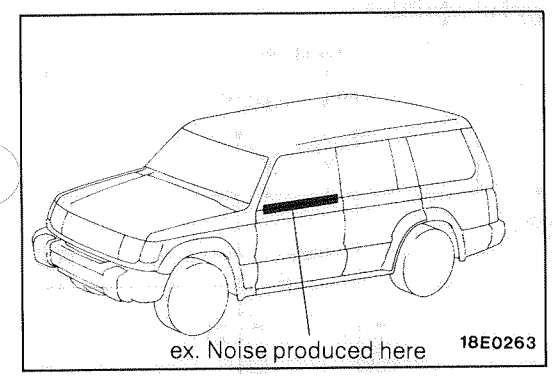

(4) When such a place is found, cover it again and continue with the procedure so as to determine if there are any other noise sources.
(5) If no others are found, the last remaining tape is the only source.

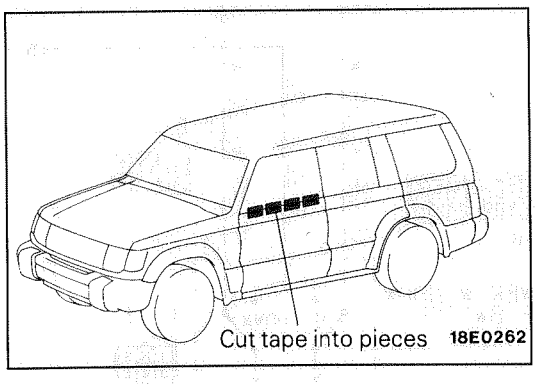

(6) Cut the remaining piece of tape into smaller pieces, attach it again as it was before, and then remove the pieces one by one in the same way so as to narrow down the source.

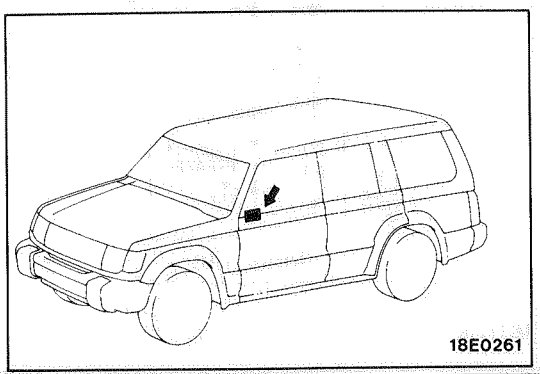

(7) Check to confirm that wind noise occurs when the last remaining tape is removed, and that noise does not occur when it is re-attached.
(8) When the source(s) of the wind noise is finally located, attach butyl tape, body sealer or similar material to obstruct this source as much as possible.

POWER WINDOW

M42EBEI

CIRCUIT DIAGRAM

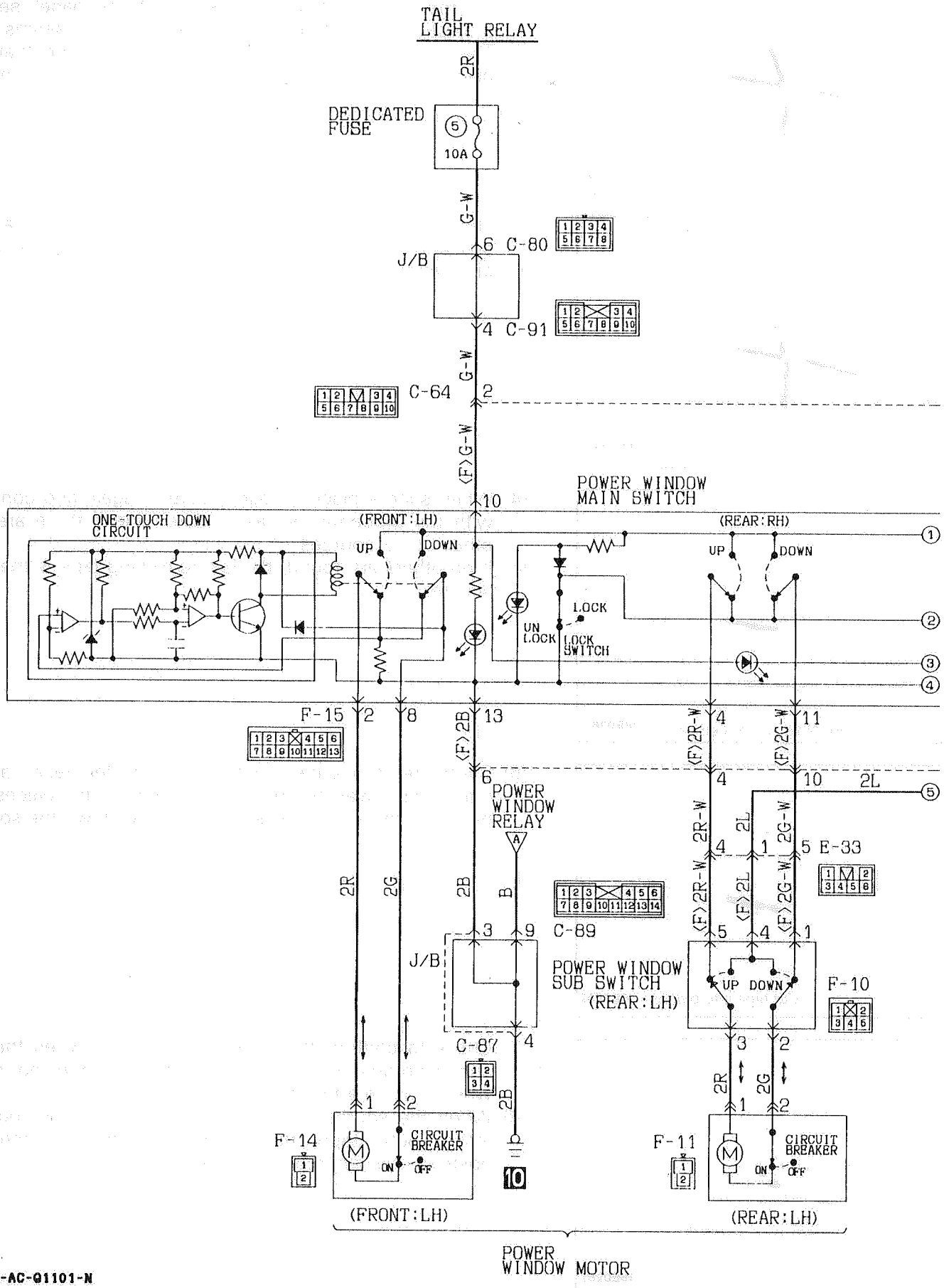

KK35-AC-Q1101-N

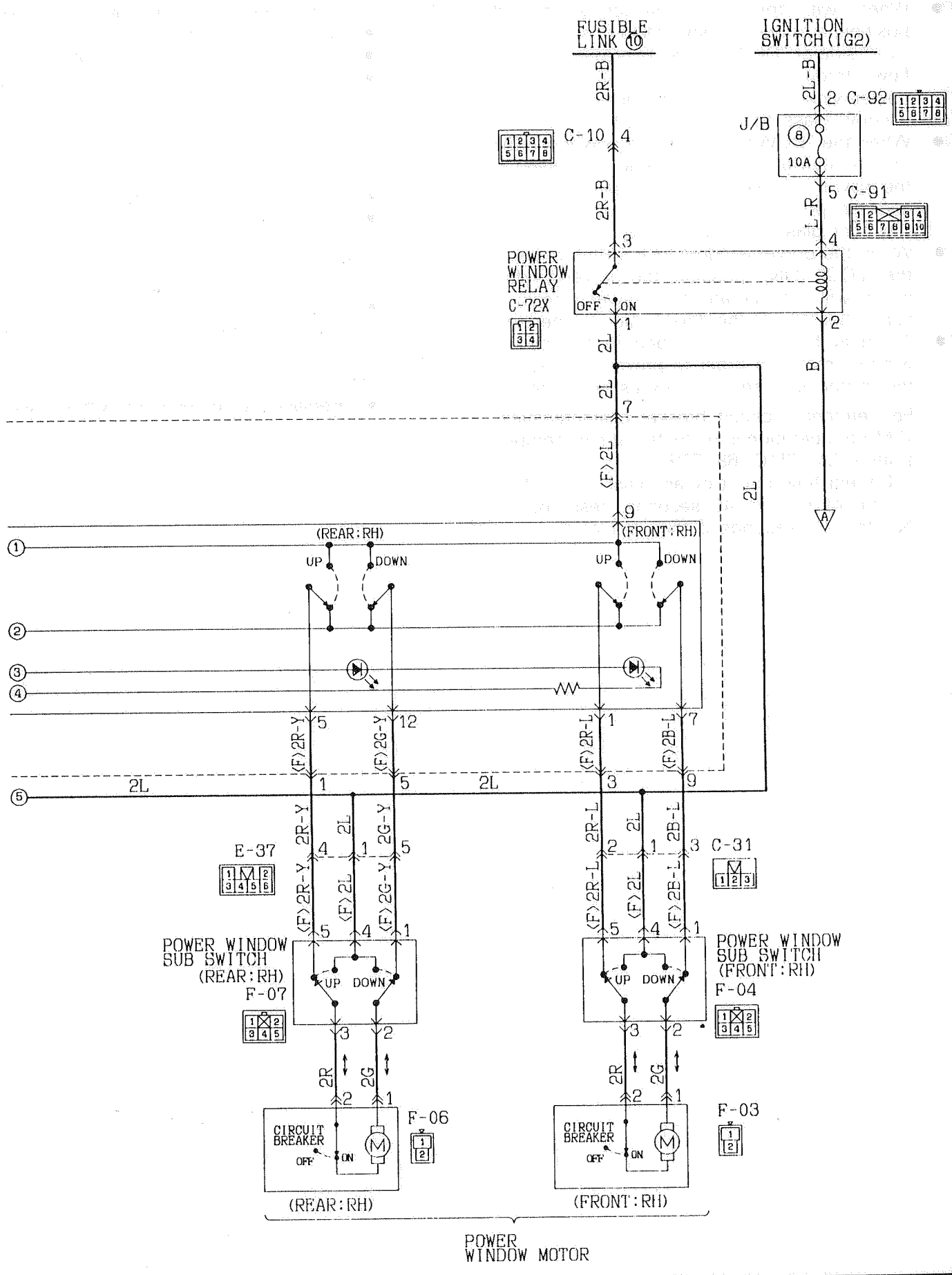
FUSIBLE LINK (10)
IGNITION SWITCH (IG2)
2R-B
2L-B
C-10
C-92
J/B
8
10A
5
C-91
L-R
POWER WINDOW RELAY
C-72X
OFF
ON
2L
B
(F)2L
(REAR:RH)
(FRONT:RH)
UP
DOWN
(F)2R-Y
(F)2G-Y
(F)2R-L
(F)2B-L
E-37
C-31
2R-Y
2G-Y
2R-L
2B-L
POWER WINDOW SUB SWITCH (REAR:RH)
F-07
POWER WINDOW SUB SWITCH (FRONT:RH)
F-04
2R
2G
CIRCUIT BREAKER
F-06
F-03
POWER WINDOW MOTOR

OPERATION

- When, with the ignition switch at the ON position, a power-window (main or sub) switch ("UP" side or "DOWN" side) is pressed, current flows through fusible link No. 10 and to the power-window motor, thus causing the door window glass to close or open.
- When the "DOWN" side of the power-window main switch at the driver's side is pressed all the way, it is locked at the pressed-in position, and the power-window motor operates until the door glass is fully opened.
- When the power-window lock switch is set to the "LOCK (ON)" position, the power-window motor will not operate if any switch (main or sub) other than at the driver's side is operated.
- A circuit breaker is provided in the power-window motor in order to prevent damage to the motor as a result of excessive current.

For reference: circuit breaker characteristics

(Motor operation is restricted at high temperature [20–25°C (68–77°F)].
Current flow is cut by an initial current flow time of four to 40 seconds; reset occurs within 60 seconds if then left as is.)

TROUBLESHOOTING HINTS

1. All door windows cannot be opened or closed.
   - Check fusible link No. 10.
   - Check the power-window relay.
   - Check the power-window main switch.
2. One of the door windows cannot be opened or cloed.
   (1) Neither of the power-window switches (main or sub) operates.
   - Check the power-window main switch.
   - Check the power-window motor for the power window that does not operate.

   (2) Either the power-window main switch or sub switch does not operate.
   - Check the power-window switch for the power window that does not operate.
3. The one-touch switch function only does not operate.
   - Replace the power-window main switch.

CENTRAL DOOR LOCKING SYSTEM

M42EBFJ

CIRCUIT DIAGRAM

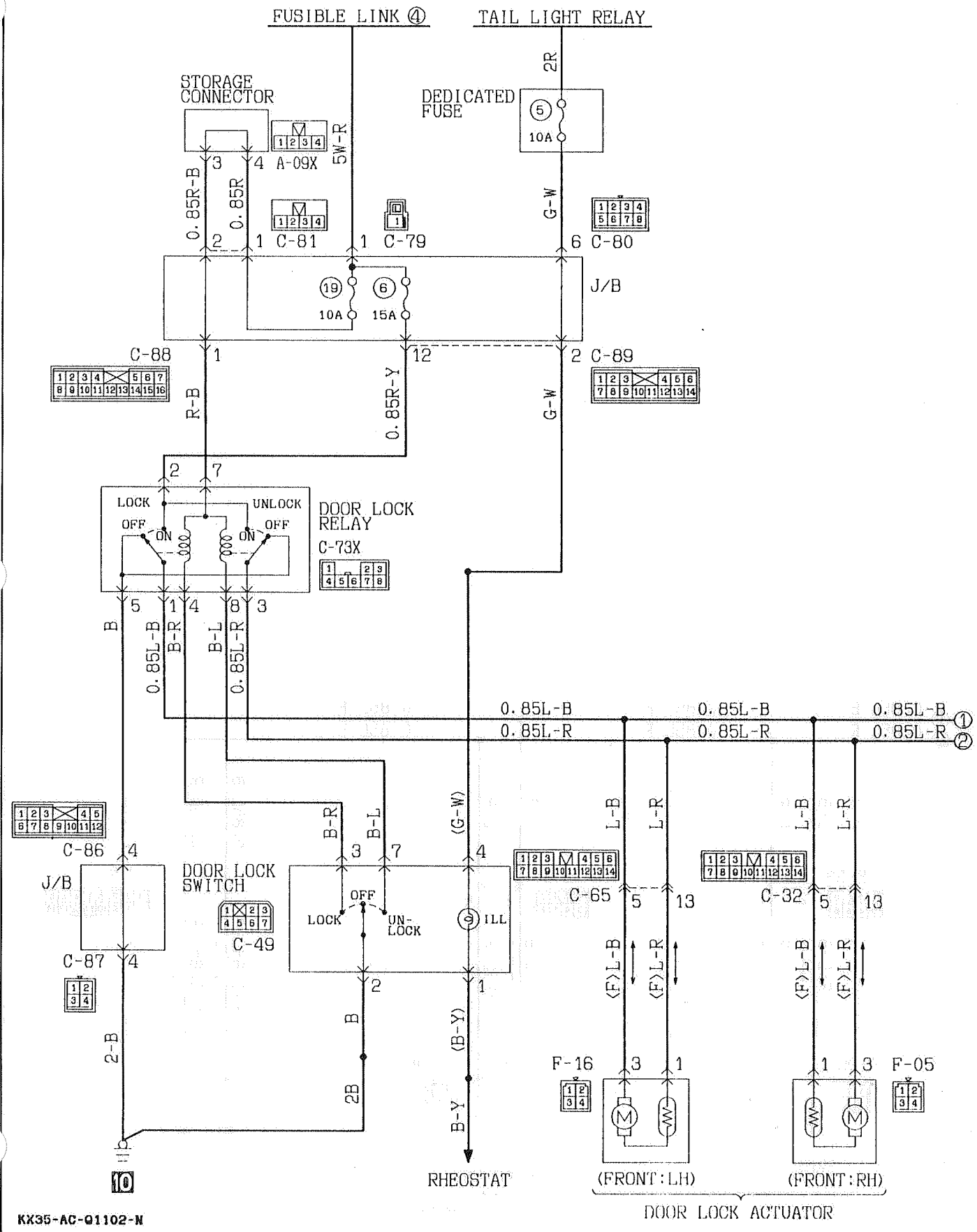

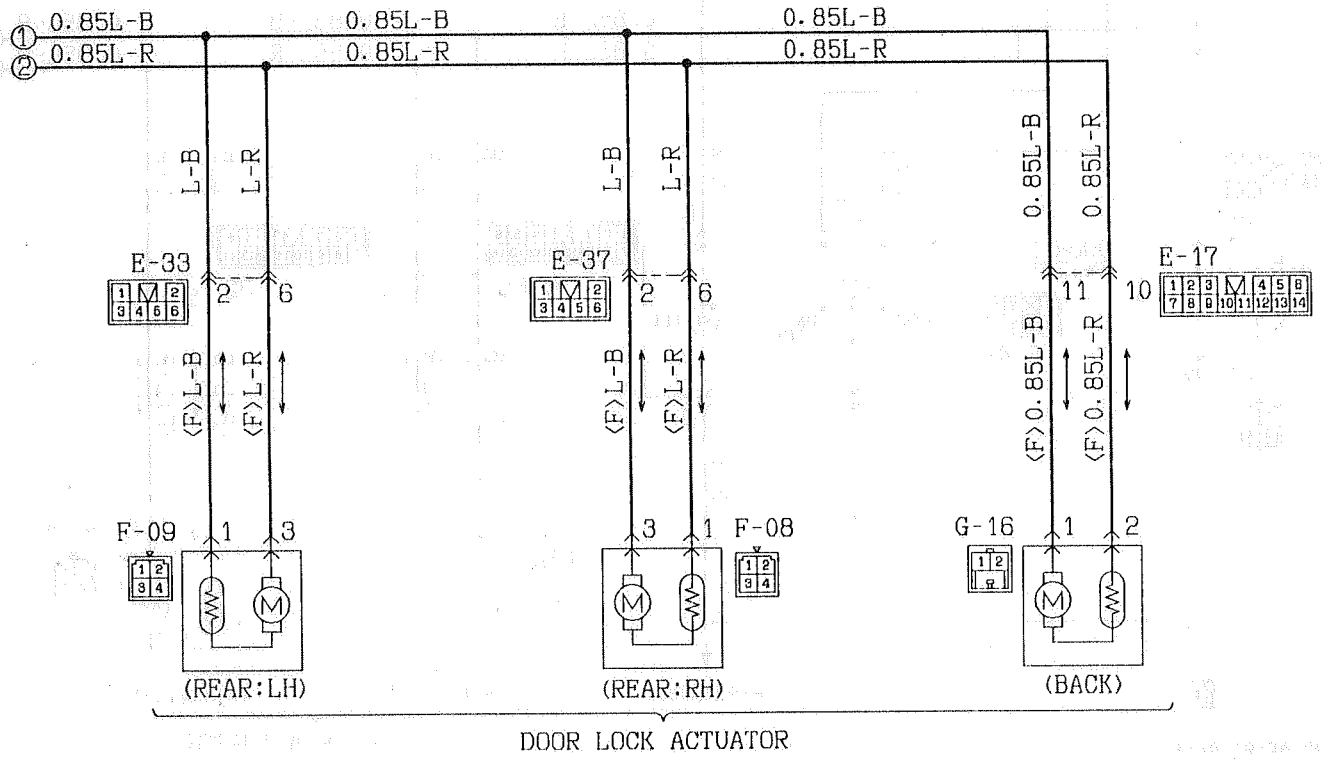
①
②
0.85L-B
0.85L-R
L-B
L-R
E-33
E-37
E-17
2
6
11
10
(F)L-B
(F)L-R
(F)0.85L-B
(F)0.85L-R
F-09
F-08
G-16
1
3
(REAR:LH)
(REAR:RH)
(BACK)
DOOR LOCK ACTUATOR

OPERATION

- When the door lock switch is set to the LOCK side (or UNLOCK side), the LOCK side (or UNLOCK side) of the door lock relay is turned ON and the door actuators of all doors operate.

  NOTE
  The door lock actuator contains a PTC thermister to prevent damage caused by overheating of the motor. If the central door lock is frequently used, the actuator may temporarily fail to operate. If it returns to normal in a few minutes, it is not defective.

TROUBLESHOOTING HINTS

1. Every door lock actuators do not operate.
   - Check fusible link No. 4
   - Check multi-purpose fuses No. 19 and 6
   - Check door lock switch
   - Check door lock relay
2. One of the door lock actuators fails to operate.
   - Check the door actuator which fails to operate.

SUNROOF

M42EBDE

CIRCUIT DIAGRAM

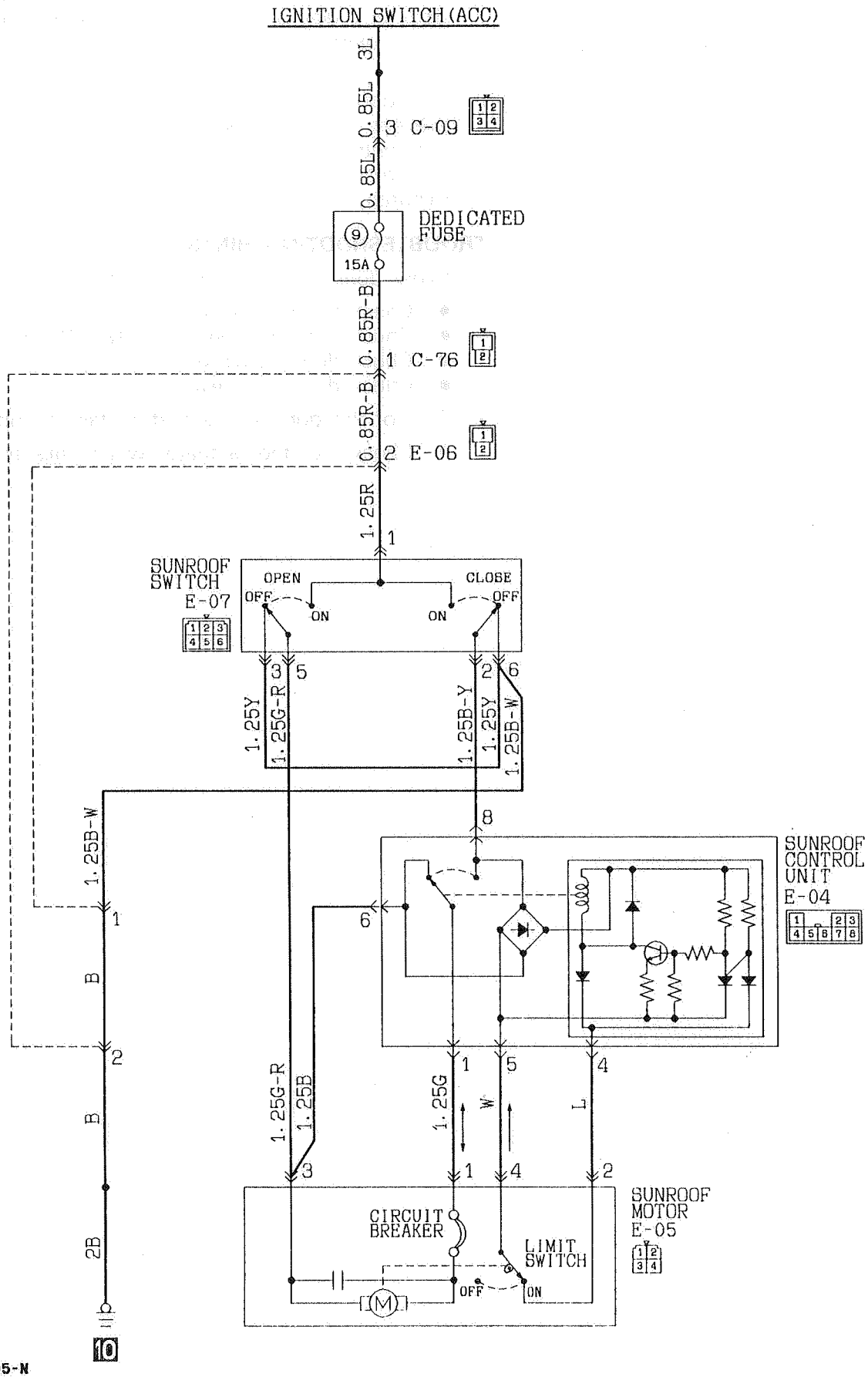

KX35-AC-Q1405-N

OPERATION

- If the ignition switch is in the "ACC" or "ON" position and the sunroof switch is pressed to the "OPEN" side, current flows to the dedicated fuse, sunroof switch, sunroof motor, control unit, sunroof switch and earth, and the sunroof opens.
- When the sunroof switch is pressed to the "CLOSE" side, current flows to the dedicated fuse, sunroof switch, control unit, sunroof motor, sunroof switch and ground, and the sunroof closes.
- The limit switch inside the sunroof motor causes the sunroof to temporarily stop approximately 135 mm (5.3 in.) before the fully open position when opening and approximately 200 mm (7.9 in.) before the fully closed position when closing.

TROUBLESHOOTING HINTS

Sunroof does not operate.

- Check dedicated fuse No. 10
- Check sunroof switch
- Check sunroof motor
- Check control unit

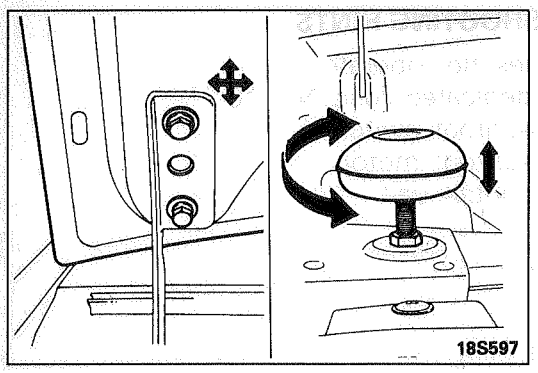

SERVICE ADJUSTMENT PROCEDURES

HOOD ADJUSTMENT M42FAAK

1. Loosen the hood mounting bolts, and then adjust the hood by moving it so that the clearance is equal on all sides.
2. Turn the hood bumpers, adjust the height of the hood.

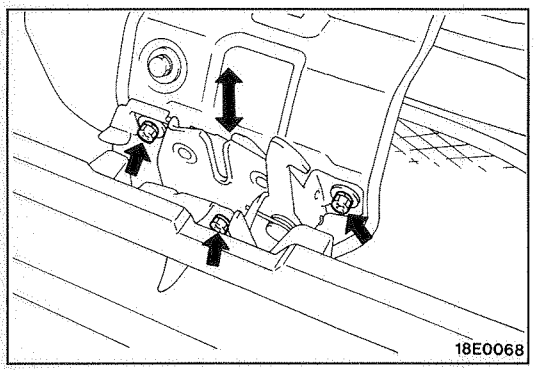

3. Loosen the hood latch mounting bolts, and move the hood, latch to adjust the attachment between the hood latch and hood striker.

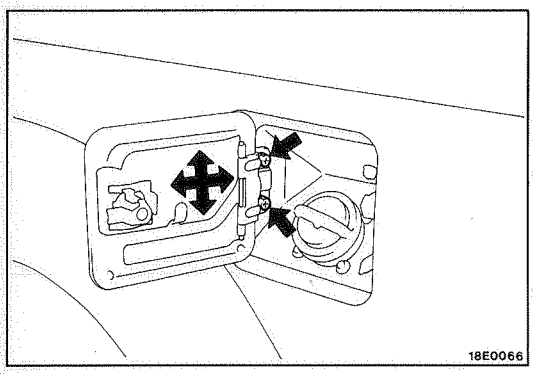

FUEL FILLER DOOR ADJUSTMENT M42FDAF

Loosen the fuel filler door mounting screw and adjust the fuel filler door so that the clearance around the fuel filler door is even without any height differences.



FRONT AND REAR DOOR ADJUSTMENT M42FEAH

1. Use the special tool to loosen the hinge mounting bolts on the body side, and then adjust the clearance around the door so that it is uniform on all sides.

   Caution
   Attach protection tape to the fender edges where the hinge is installed.

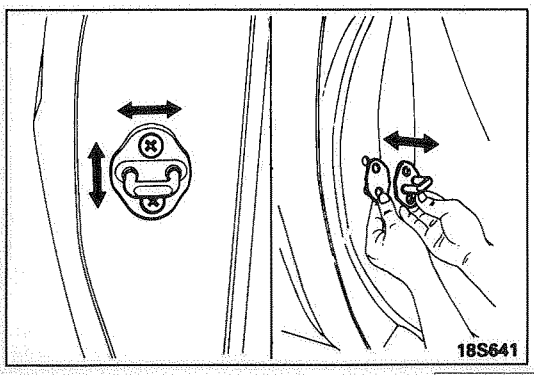

2. When the door is replaced, loosen hinge mounting bolts on door side and adjust alignment of fender panel with front door panel.
3. Loosen door striker mounting screws to adjust alignment of door panel.
4. Increase or decrease the number of shims and move striker to adjust engagement of striker with door latch.

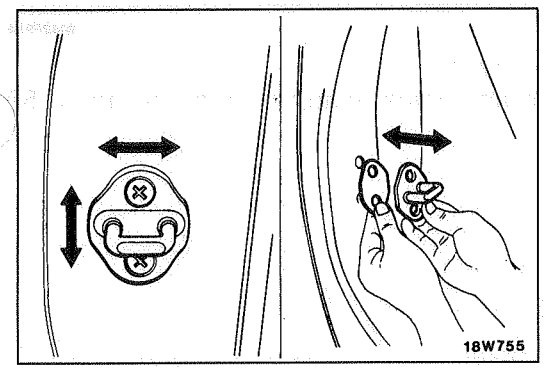

BACK DOOR ADJUSTMENT M42FCAF

1. Adjust the fit of the door panel to the body by loosening the striker mounting screws and moving the striker.
2. Adjust the linking of the striker and the door latch by increasing or decreasing the thickness of the striker shim.

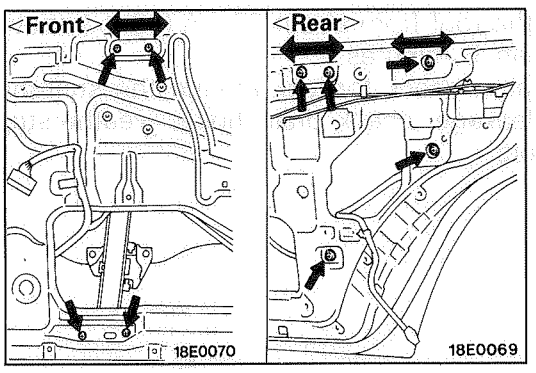

DOOR WINDOW GLASS ADJUSTMENT M42FFAN

Check that the door window glass runs smoothly in the door glass channel when the glass is fully raised and lowered. If it does not, adjust by the following procedure.

1. Remove the door trim and waterproof film. (Refer to P.42-34.)
2. Loosen the window regulator assembly mounting bolts and move the upper attachment back and forward to adjust the tilt of the glass.
3. Loosen the rear door center sash mounting bolt, and adjust the front-to-back position of the glass.

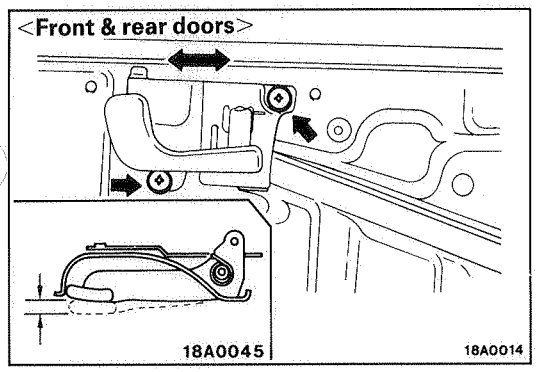

DOOR INSIDE HANDLE PLAY ADJUSTMENT M42FGAC

1. Remove the door trim and waterproof film. (Refer to P.42-34.)
2. Move the door inside handle installation position back and forth to adjust so that the inside handle play allowance agress with the standard value.

Standard value: 4–10 mm (.16–.39 in.)

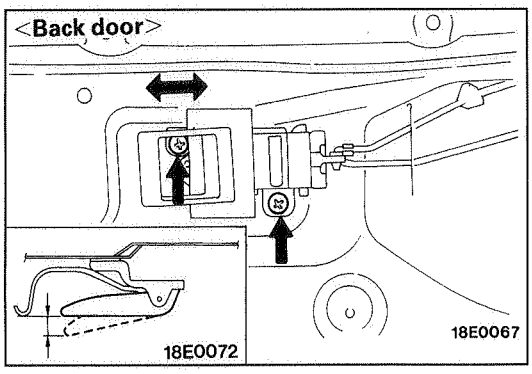

DOOR OUTSIDE HANDLE PLAY CHECK M42FHAH

If the door outside handle play does not conform to the standard value, check the door outside handle or door latch assembly, and replace if necessary.

Standard value: (A) 3–12 mm (.12–.47 in.)
(B) 2–8 mm (.08–.31 in.)

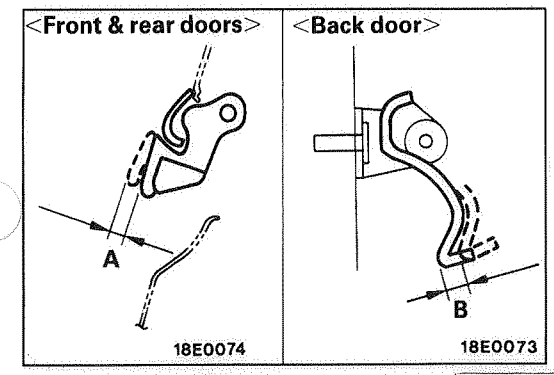

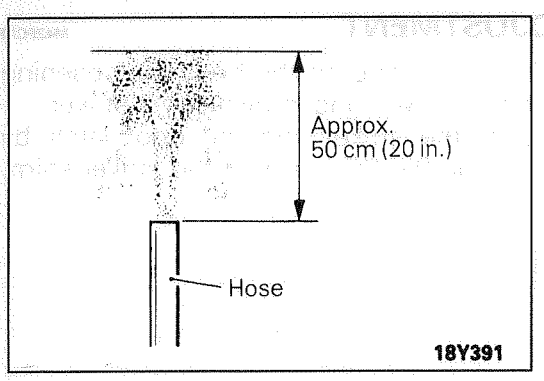

WATER TEST

M42FPAB

1. Fully close the sunroof.
2. Hold hose upward and adjust water fountain to about 50 cm (20 in.) high.

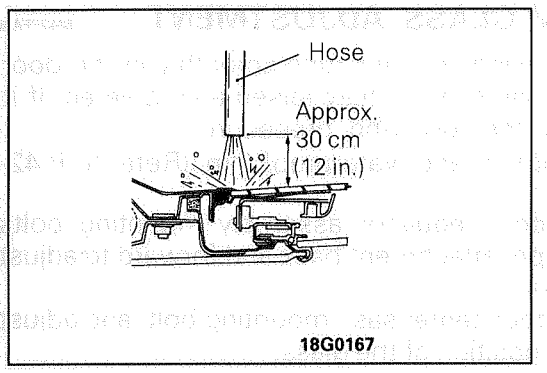

3. Pour water over the roof from about 30 cm (12 in.) above roof for more than 5 minutes.
4. While pouring water, check for leak around the sunroof.
5. In the event of leakage, check drain hose, weatherstrip contact and others.

BODY MOUNTING

M42GAAA

REMOVAL AND INSTALLATION

1. Special bolt
2. Mounting bolt
3. Plain washer
4. Body mounting rubber
5. Body mounting rubber A
6. Spacer
7. Body mounting rubber B
8. Plate
9. Washer
10. Body mount stopper
11. Self locking nut
12. Body shim

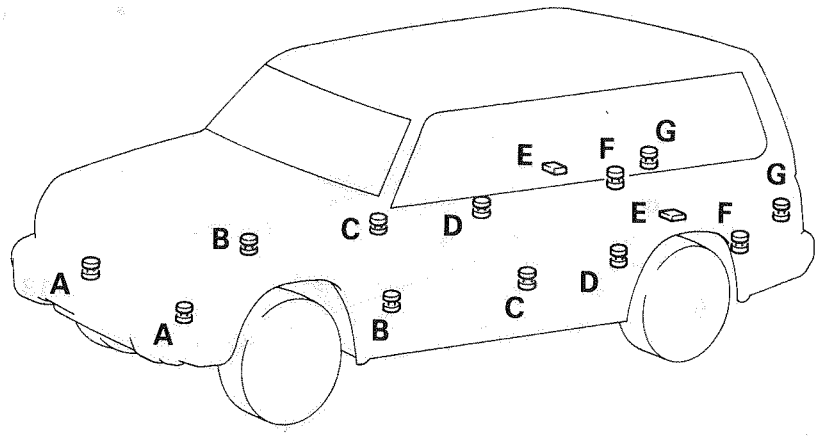

18E0077

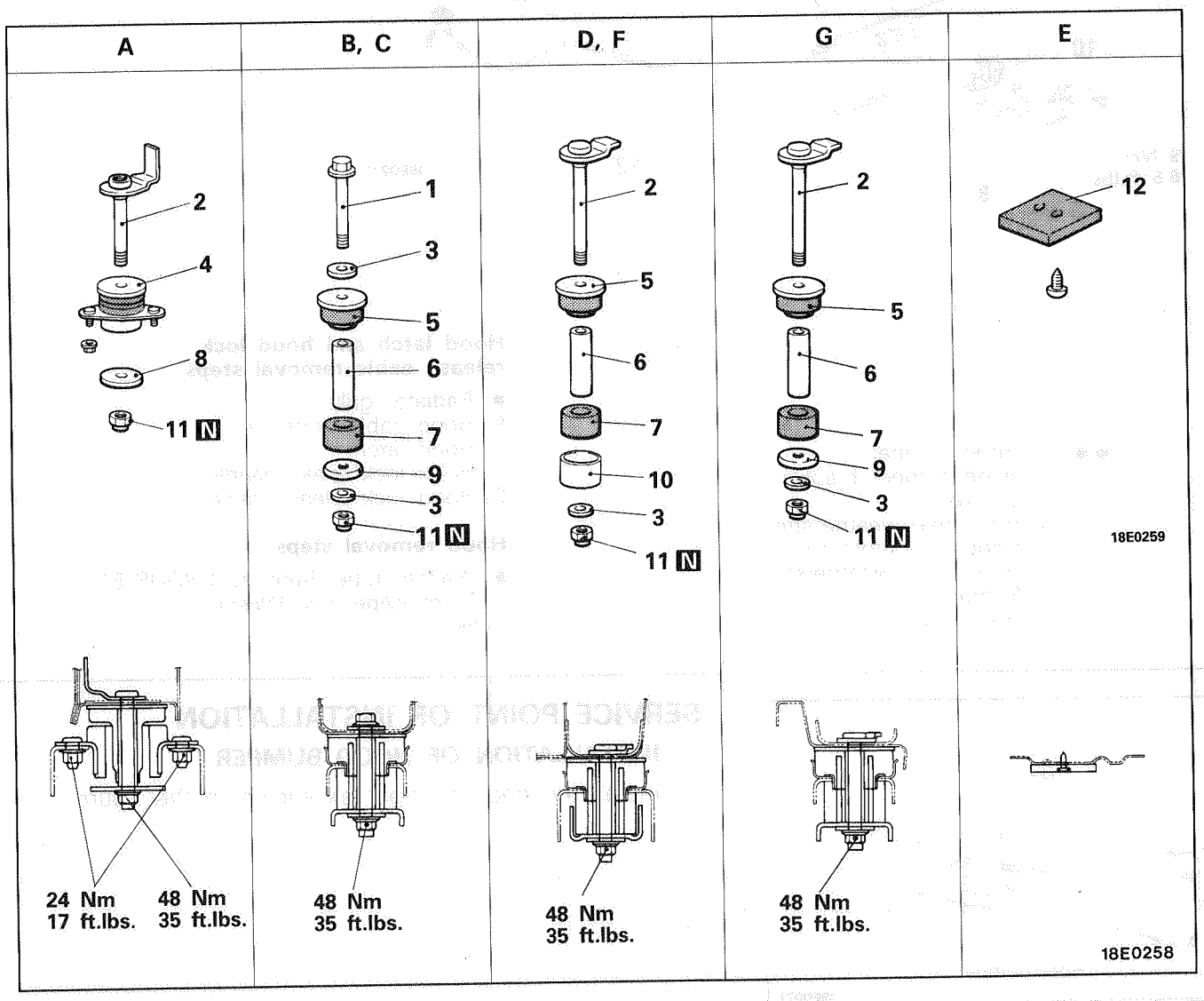

HOOD

M42HAAX

REMOVAL AND INSTALLATION

Hood Post-installation Operation
- Hood Adjustment (Refer to P.42-16.)

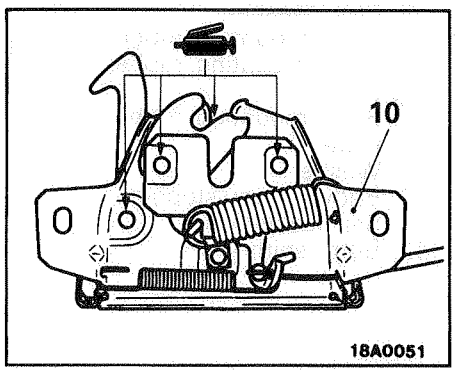

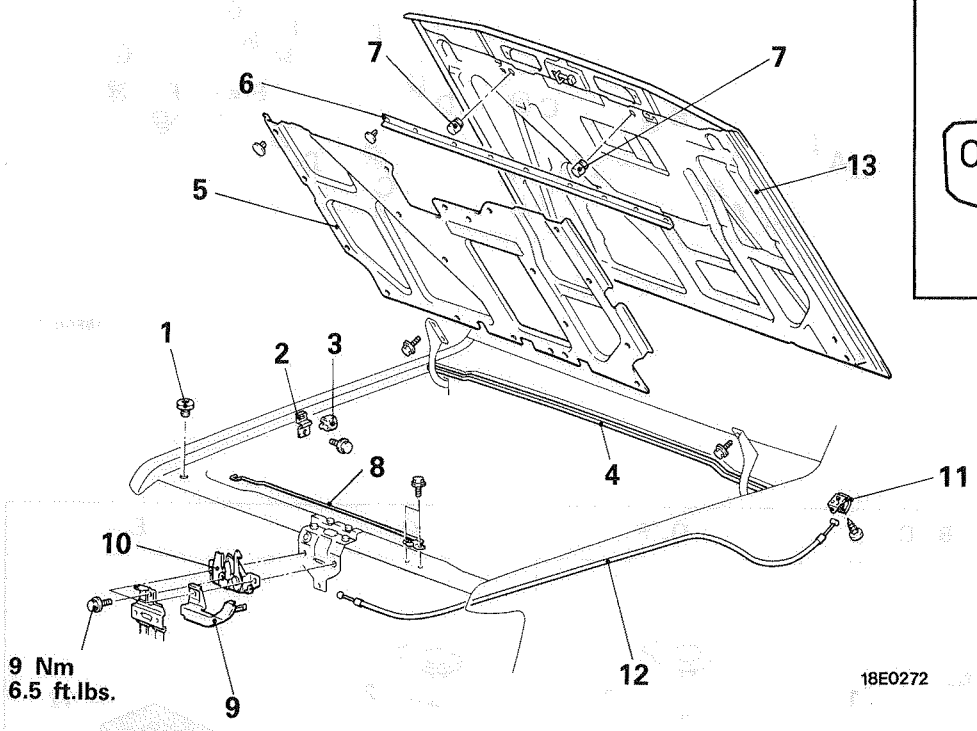

◆◆ 1. Hood bumper
2. Hood bumper bracket
3. Damper
4. Hood rear weatherstrip
5. Hood heat protector
6. Hood front weatherstrip
7. Bumper
8. Hood support rod

Hood latch and hood lock release cable removal steps
- Radiator grille

9. Hood cable protector
10. Hood latch
11. Hood lock relase handle
12. Hood lock release cable

Hood removal steps
- Washer tube (Refer to GROUP 51 – Front Wiper and Washer)

13. Hood

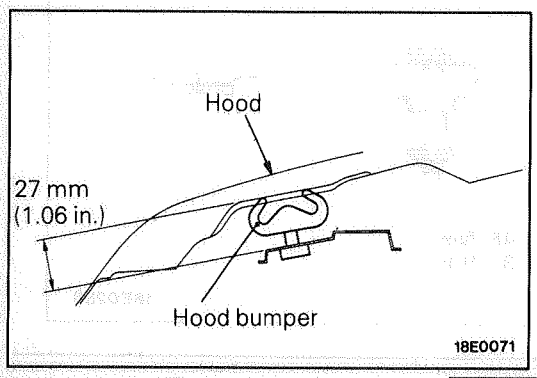

SERVICE POINT OF INSTALLATION

1. INSTALLATION OF HOOD BUMPER

Install the hood bumper as shown in the figure.

TSB Revision

FUEL FILLER DOOR

M42JAAU

REMOVAL AND INSTALLATION

Fuel Filler Door Post-installation Operation
- Fuel Filler Door Adjustment (Refer to P.42-16.)

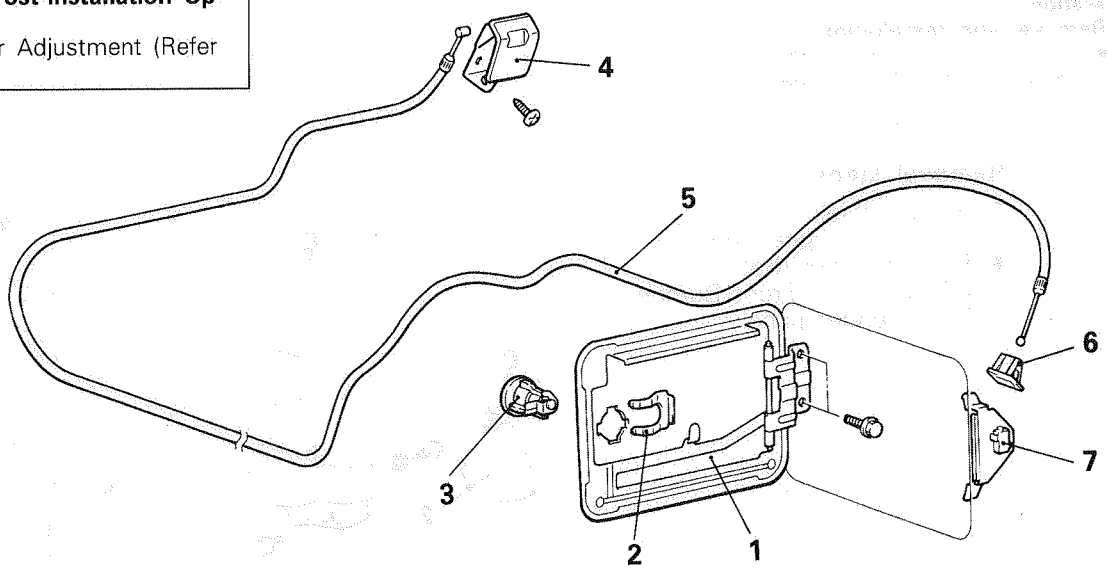

18E0059

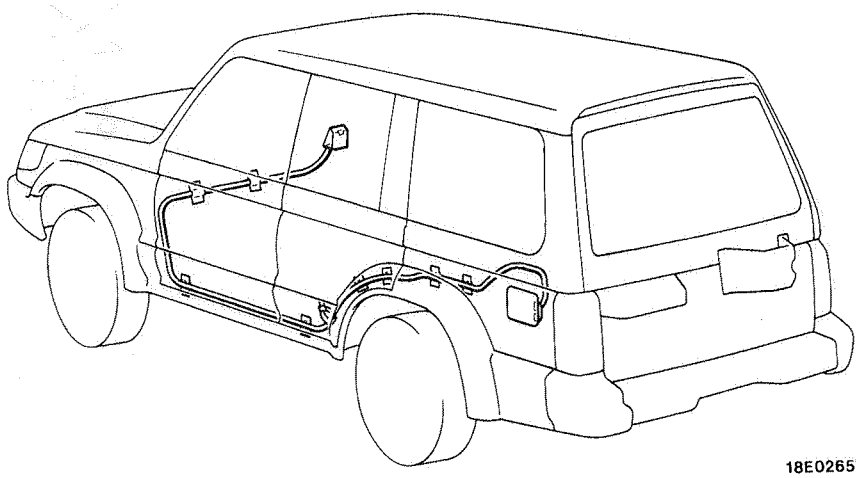

18E0265

1. Fuel filler door

Lock cylinder assembly removal steps

2. Retainer
3. Lock cylinder assembly

Fuel filler door lock release cable removal steps

- Center piller trim (LH)
- Front rail cover (LH)
- Rear rail cover (LH)
- Quarter trim (LH)

(Refer to GROUP 52–Trims.)

4. Fuel filler door lock release handle
5. Fuel filler door lock release cable
6. Cable holder

Fuel filler door hook removal steps

5. Connection for fuel filler door lock release cable
7. Fuel filler door hook

FENDER

M42KAAZ

REMOVAL AND INSTALLATION

Pre-removal and Post-installation Operation
Removal and Installation
- Front Mud Gard and Wide Fender (Refer to GROUP 51 – Garnish and Moulding.)

Removal steps
1. Splush shield
2. Front turn signal light
- Front bumper (Refer to GROUP 51 – Front Bumper.)
3. Front fender panel

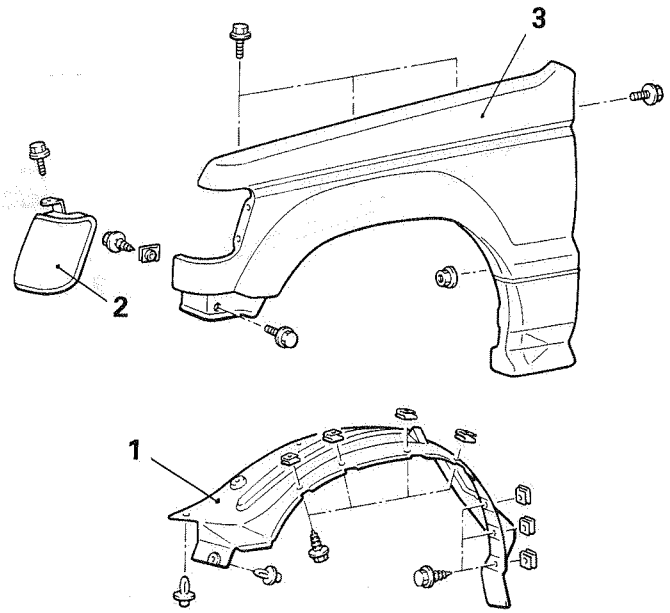

18E0062

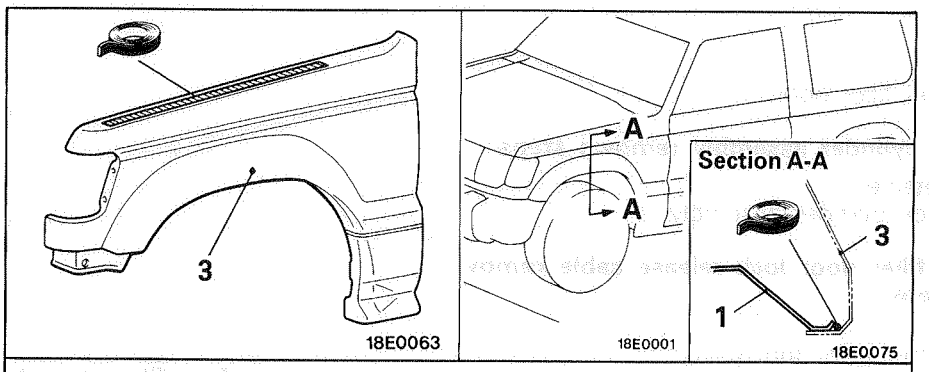

Sealant:
3M ATD Part No. 8625 or equivalent

WINDOW GLASS

M42LAAM

GENERAL

For bonding of the windshield and rear window glass, a single-liquid urethane adhesive is used.

ADHESIVE AND RESERVE ITEMS

Adhesive and Reserve Items	Applications	Quantity
Adhesive		
3M SUPER FAST URETHAN 8609		One cartridge
3M SUPER FAST URETHAN PRIMER 8608		As required
Reserve items		
Wire (dia. × length)	for cutting adhesive	Five pieces of wire 0.6 mm×1 m (.02 in.×3.3 ft.)
Adhesive gun	for adhesive application	One
3M ATD Part No. 8906	for cleaning jointing surfaces	As required
Wiping rags		As required
Sealer	for prevention of water leaks and gathering after adhesive application	As required
Glass holder		Two
Windshield moulding (Service Part)		One
Window dam (Service Part)		As required

WORKING PROCESS

Windshield installation procedure

Body side

Cleaning of adhesion surface
Cut off the residual adhesive until the thickness is less than 2 mm (.08 in.). Clean the adhesion surface, and let dry for 3 minutes or more.

Application of primer
Apply to the adhesion surface of the body, and let dry for 3 minutes or more.

Attaching of clips
Install the windshield clips.

Windshield side

Reusing the windshield

Cleaning of adhesion surface
Completely cut off all of the residual adhesive. Clean the adhesion surface, and let dry for 3 minutes or more.

Replacing the windshield

Cleaning of adhesion surface
Clean off any dirt adhering to the adhesion surface, and let dry for 3 minutes or more.

Gluing of window spacer
Glue the window spacer to the glass, following the standard position all the way around the inside edge of the glass.

Application of primer
Apply sufficient primer evenly to the adhesion surface (specified position) so that there is no patchiness.
After application, let dry for 3 to 30 minutes.

Application of adhesive
Within 30 minutes after applying the primer, apply the adhesive evenly all the way around the inside edge of the glass.

Installation of windshield
After applying the adhesive, lightly press the windshield glass evenly so that it adheres completely.

Installation of moulding
Fix the moulding with clips without scratching the body.

Cleaning
After removing any adhesive that is sticking out or adhering to the body or glass with a spatula, etc., clean off with 3M ATD Part No. 8906 or equivalent.

Checking for water leaks
Carry out a shower test to check that no water will leak through.

TSB Revision

WINDSHIELD

REMOVAL AND INSTALLATION

M42LBAZ

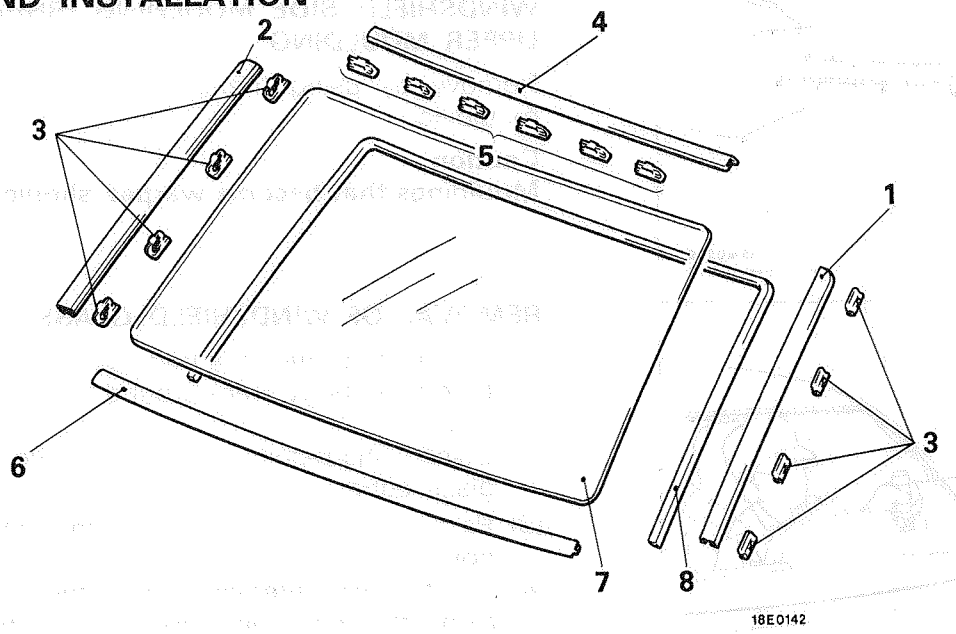

Pre-removal and Post-installation Operation
Removal and Installation

- Instrument Panel (Refer to GROUP 52 – Instrument Panel.)
- Front Pillar Trim (Refer to GROUP 52 – Trims.)
- Front Deck Garnish (Refer to GROUP 51 – Garnish and Moulding.)

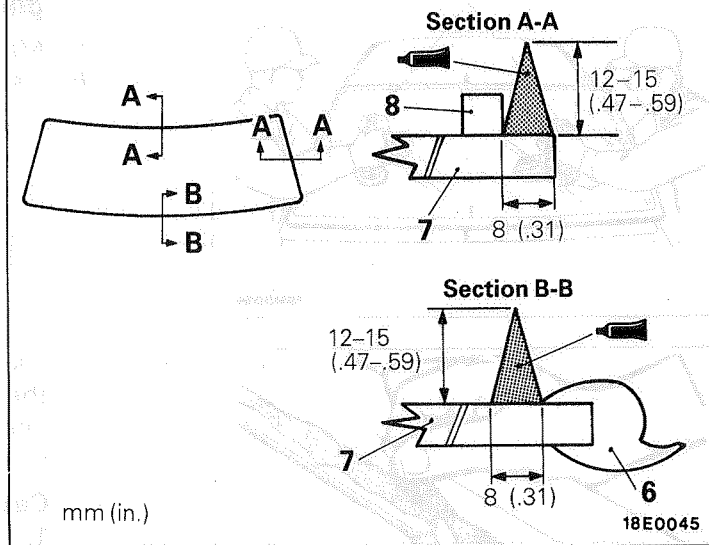

Adhesive:
3M Super Fast Urethan Auto Glass Sealant Part No. 8609 or equivalent

Removal steps

1. Windshield side moulding (LH)
2. Windshield side moulding (RH)
3. Windshield clip
4. Windshield upper moulding
5. Windshield clip
6. Windshield lower moulding
7. Windshield glass
8. Window spacer

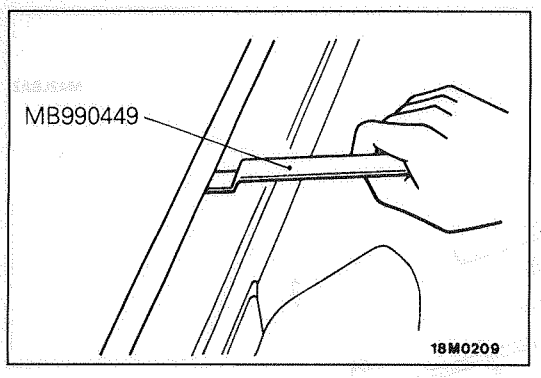

SERVICE POINTS OF REMOVAL

1. REMOVAL OF WINDSHIELD SIDE MOULDING (LH)/2. WINDSHIELD SIDE MOULDING (RH)/4. WINDSHIELD UPPER MOULDING

Remove by using the special tool to lever out each moulding.

Caution
Mouldings that become warped should not be re-used.

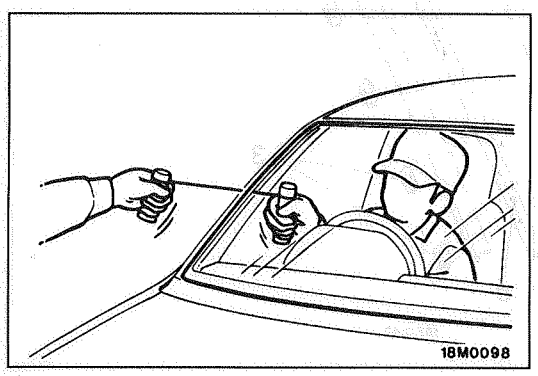

7. REMOVAL OF WINDSHIELD GLASS

(1) In order to protect the body (paint surface), apply cloth tape to all body areas around the installed windshield glass.
(2) Using a sharp-point drill, make a hole in the windshield glass edhesive.
(3) Pass wire from the inside of the vehicle through the hole.
(4) Pull the wire alternately from the inside and outside along the windshield glass to cut the adhesive.

Caution
Do not let the wire touch the edge of the windshield glass.

(5) Make mating marks on the windshield glass and body.
(6) Use the glass holders to remove the windshield glass.

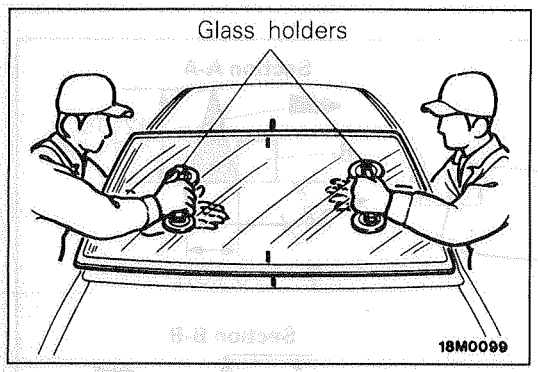

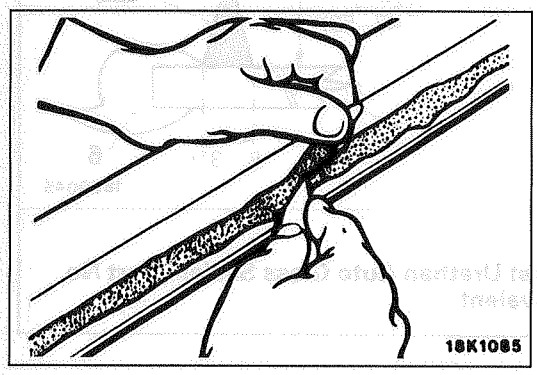

(7) Use a knife to cut away the remaining adhesive so that the thickness is within 2 mm (.08 in.) around the entire circumference of the body flange.
(8) Finish the flange surfaces so that they are smooth.

Caution
1. **Be careful not to remove more adhesive than is necessary.**
2. **Be careful also not to damage the paintwork on the body surface with the knife. If the paintwork is damaged, repair the damaged area with repair paint or anti-rust agent.**

(9) When reusing the glass, remove the adhesive and window spacer chips still adhering to the window glass, and clean with 3M ATD Part No. 8906 or equivalent.
(10) Clean the body side in the same way.

Caution
Let the cleaned places stand for 3 minutes or more, and carry out the next procedures after they have dried. Also, do not touch any surface that has been cleaned.

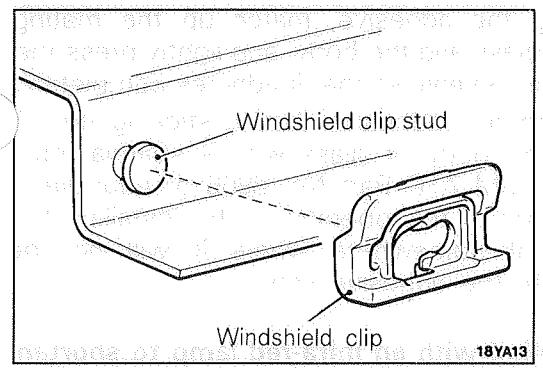

WINDSHIELD CLIP STUD REPAIR

If the T-studs are broken, use a drill to make holes in the T-studs 3 mm (.12 in.) in diameter, fill the holes with adhesive, and then use screws to mount the window moulding clips.

Caution
After installing the clip, apply antirust solvent to the screw head to protect them from rust.

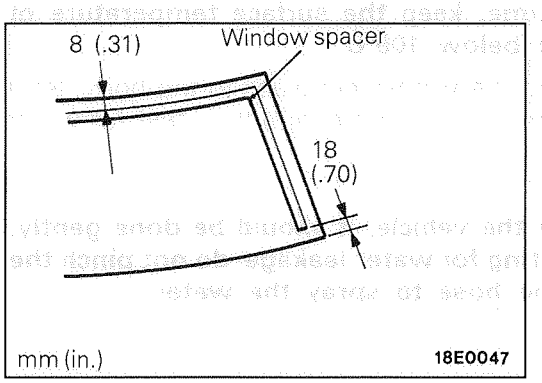

SERVICE POINTS OF INSTALLATION

8. INSTALLATION OF WINDOW SPACER

After cleaning the window spacer adhesion surface of the windshield glass with 3M ATD Part No. 8906 or equivalent to remove all grease, etc., attach the window spacer as shown in the figure.

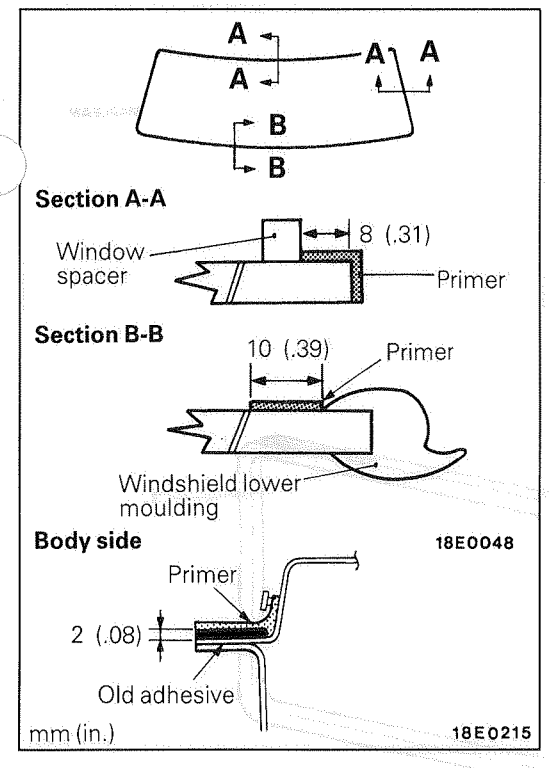

7. INSTALLATION OF WINDSHIELD GLASS/6. WINDSHIELD LOWER MOULDING

(1) When replacing the glass, temporarily set the glass against the body, and put mating marks on the glass and body where they match.
(2) Install the windshield lower moulding onto the windshield glass.
(3) Soak a sponge in the primer, and apply evenly to the glass and the body in the places shown in the figure.

Specified primer: 3M Super Fast Urethan Primer Part No. 8608 or equivalent

Caution
1. **The primer strengthens the adhesive strength, so be sure to apply it evenly around the entire circumference. Also, a too thick application will cause lowering of the adhesive strength.**
2. **Do not touch the coated surface.**

(4) After applying the primer, let it dry for 3 to 30 minutes.

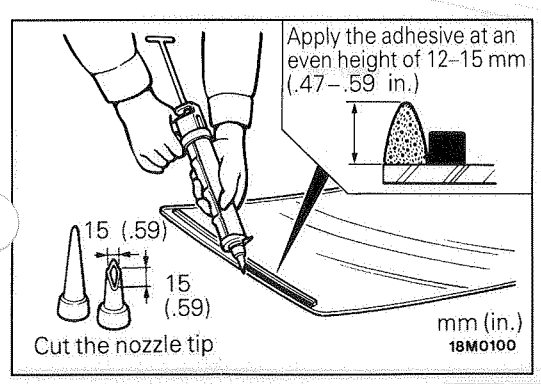

(5) Within 30 minutes after applying the primer, fill the sealant gun with adhesive and apply the adhesive evenly around the entire circumference of the windshield.

Specified adhesive: 3M Super Fast Urethan Auto Glass Sealant Part No. 8609 or equivalent

NOTE
Cut the nozzle tip of the sealant gun into a V shape to facilitate adhesive application.

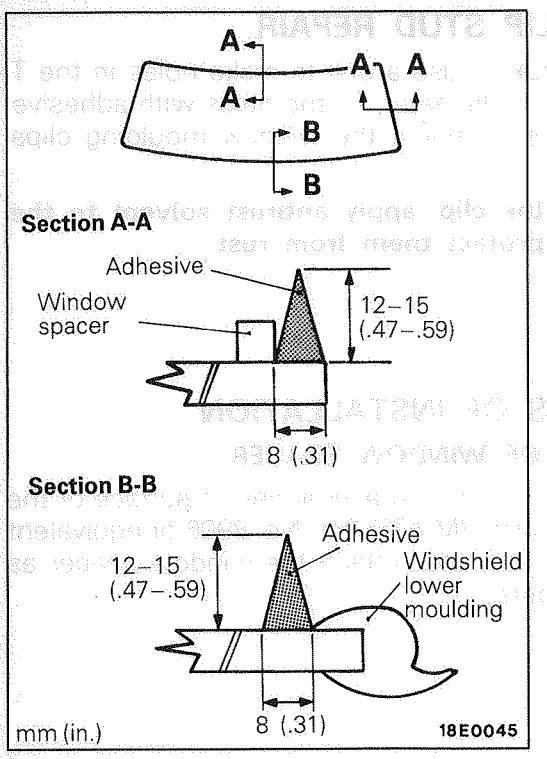

(6) After applying the adhesive, match up the mating marks on the glass and the body, and lightly press the windshield glass evenly so that it adheres completely.

(7) After removing any adhesive that is sticking out o adhering to the body or glass with a spatula, etc., clean off with 3M ATD Part No. 8906 or equivalent. After completion of this operation (after installing the glass), place it somewhere where it will not be disturbed, until the adhesive sets.

Caution
If heat is applied with an infra-red lamp to shorten the setting time, keep the surface temperature of the adhesive below 100°C.

(8) After attaching the windshield glass to the body, let it stand for 30 minutes or more, and then test for water leakage.

Caution
1. **If moving the vehicle, it should be done gently.**
2. **When testing for water leakage, do not pinch the end of the hose to spray the water.**

QUARTER WINDOW GLASS

REMOVAL AND INSTALLATION

M42LEAM

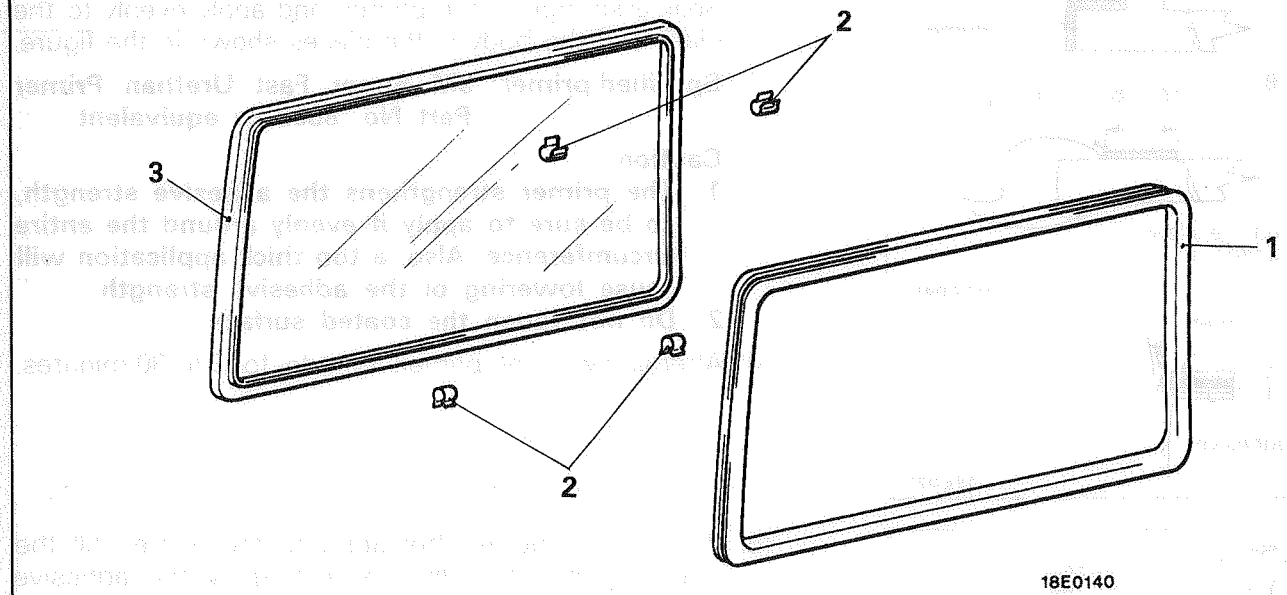

Quarter window glass removal steps
- Quarter upper trim (Refer to GROUP 52 – Trims.)

1. Opening trim
2. Clip
3. Quarter window glass assembly

BACK DOOR WINDOW GLASS

M42LCAL

REMOVAL AND INSTALLATION

Pre-removal and Post-installation Operation
- Removal and Installation of Back Door Upper Trim (Refer to P.42-44.)

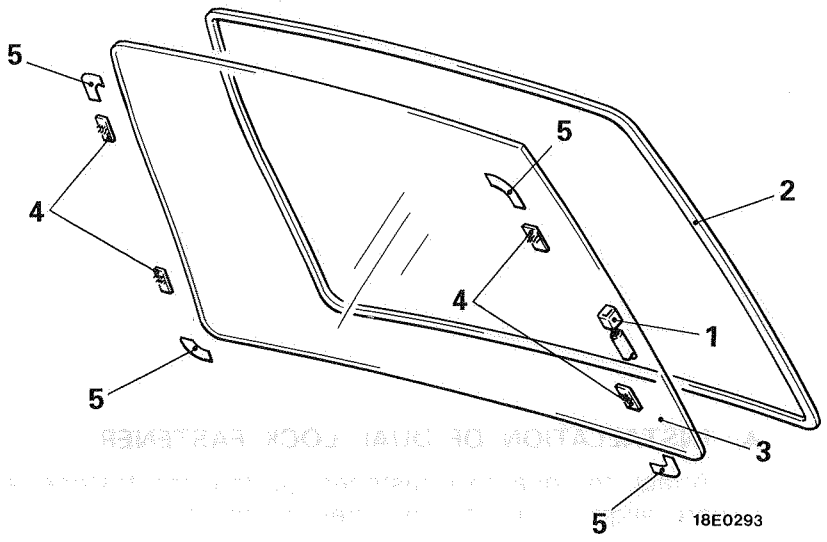

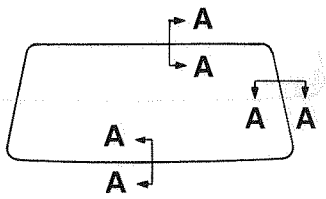

Section A-A

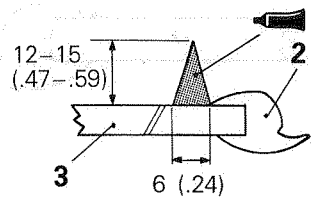

mm (in.) 18E0049

Adhesive:
3M Super Fast Urethan Auto Glass Sealant Part No. 8609 or equivalent

Removal steps
1. Defogger terminal
2. Back door window glass moulding
3. Back door window glass
4. Dual lock fastener
5. Tape

SERVICE POINT OF REMOVAL

3. REMOVAL OF BACK DOOR WINDOW GLASS

Remove in the same way as for the windshield glass. (Refer to P.42-26.)

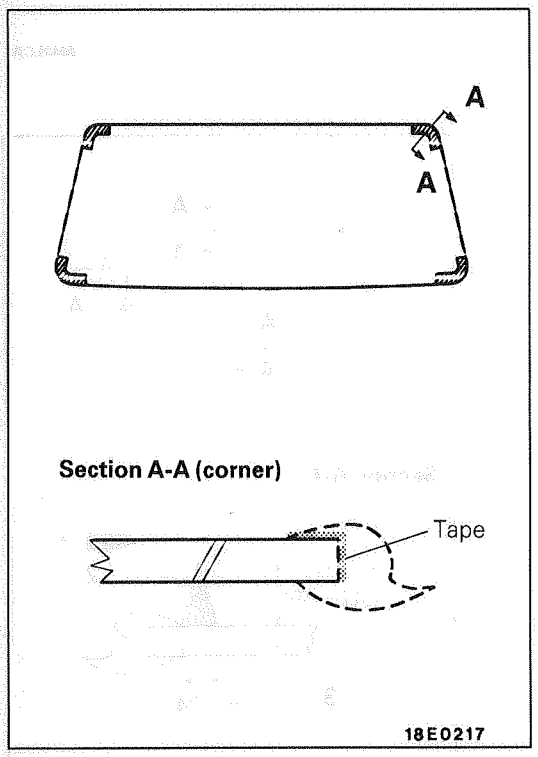

SERVICE POINTS OF INSTALLATION

5. INSTALLATION OF TAPE

Apply tape to the corner of the back door window glass as shown in the illustration.

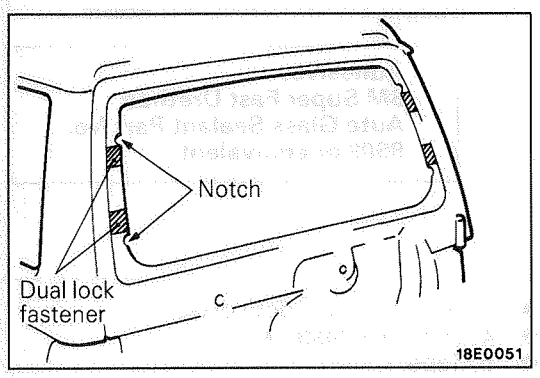

4. INSTALLATION OF DUAL LOCK FASTENER

Attach the dual lock fasteners so that the fastener ends are aligned with the notches on the body.

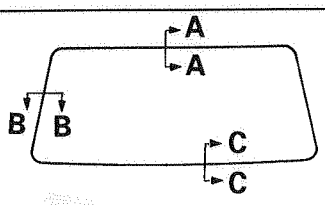

<Application of primer>
Section A–A, B-B, C-C

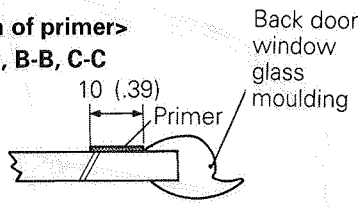

18E0044

Body side
Section A-A

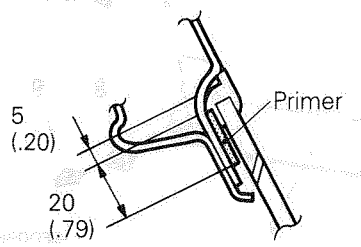

18E0295

Section B-B

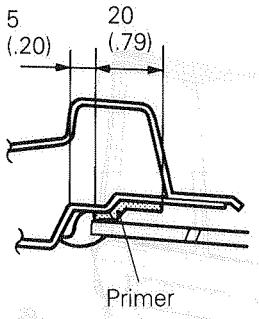

18E0296

Section C-C

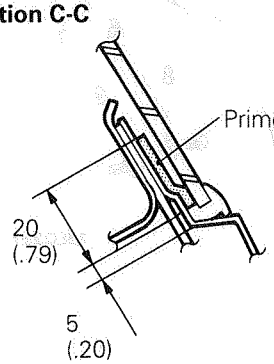

18E0294

<Application of adhesive>
Section A–A, B-B, C-C

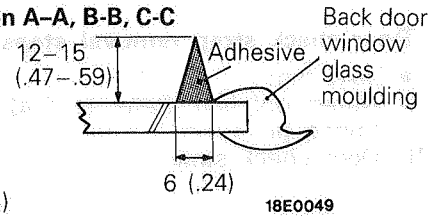

mm (in.)

18E0049

3. INSTALLATION OF BACK DOOR WINDOW GLASS/2. BACK DOOR WINDOW GLASS MOULDING

Install in the same way as for the windshield glass. (Refer to P.42-27.)

DOOR ASSEMBLY

M42MABE

REMOVAL AND INSTALLATION

Door Post-installation Operation
- Door Adjustment (Refer to P.42-16.)

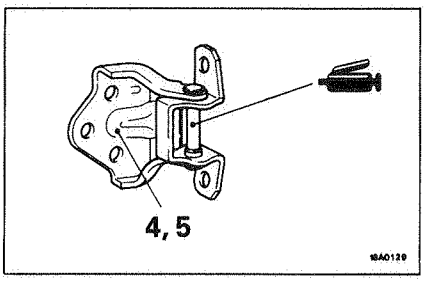

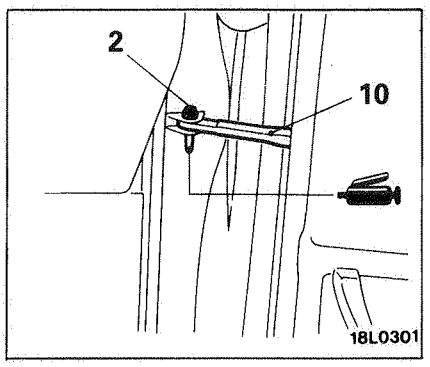

<Front door>

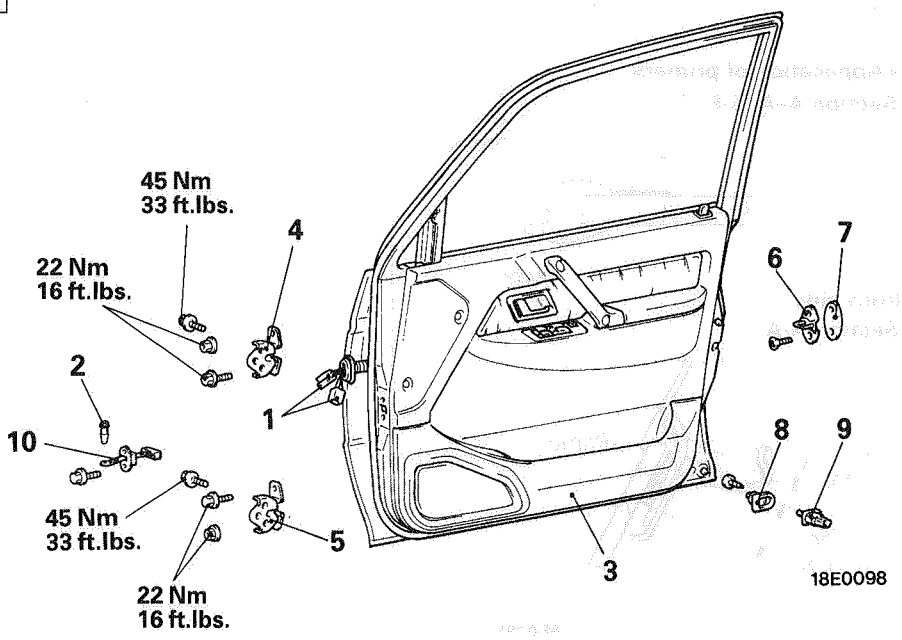

<Rear door>

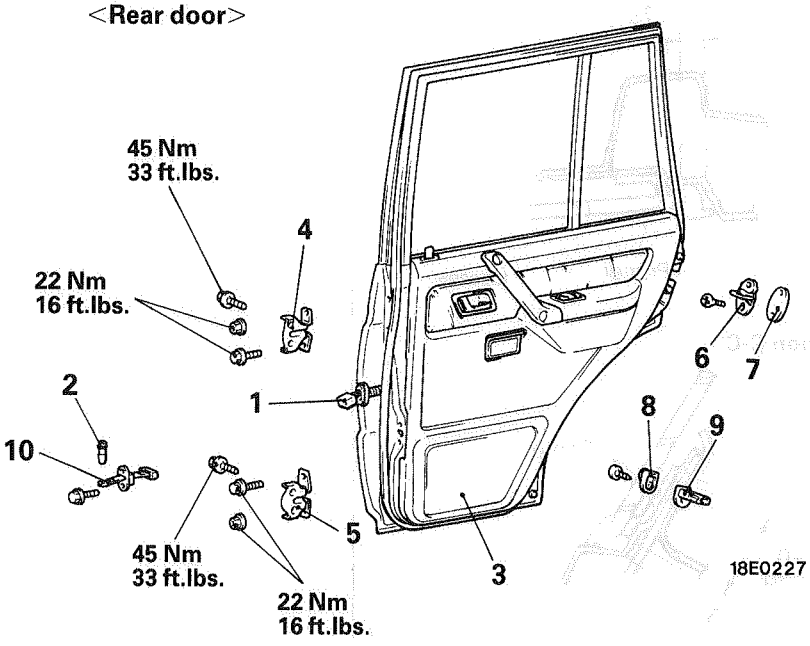

Door removal steps
1. Door harness connector
2. Spring pin
3. Door assembly
4. Door upper hinge
5. Door lower hinge

Striker removal steps
6. Striker
7. Striker shim

Door switch removal steps
8. Door switch cap
9. Door switch

Door check strap removal steps
- Door trim
- Waterproof film (Refer to P.42-34.)

2. Spring pin
10. Door check strap

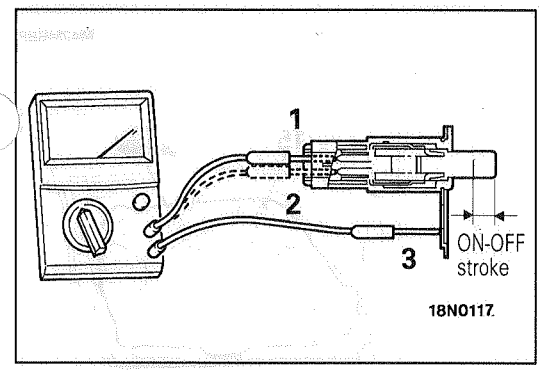

INSPECTION

DOOR SWITCH

Operate the switch, and check the continuity between the terminals.

<Type 1>

Switch position \ Terminal	1	2	3
Open (ON)	○	○	○
Depressed (OFF)			

<Type 2>

Switch position \ Terminal	1	2
Open (ON)	○	○
Depressed (OFF)		

NOTE
○–○ indicates that there is continuity between the terminals.

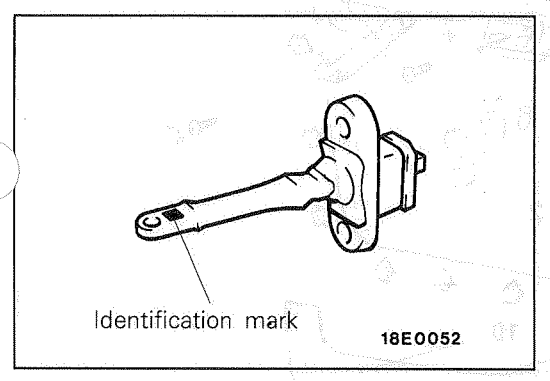

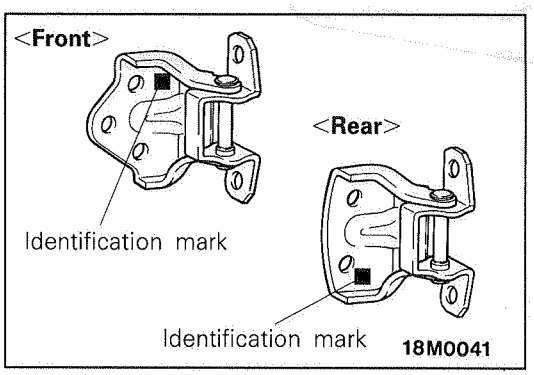

SERVICE POINTS OF INSTALLATION

10. INSTALLATION OF DOOR CHECK STRAP

Install the door check so that the identification marks shown below are facing upwards.

Place of application		Identification mark
RH	Front door	PR
	Rear door	QR
LH	Front door	PL
	Rear door	QL

5. INSTALLATION OF DOOR LOWER HINGE/4. DOOR UPPER HINGE

The door hinges differ according to where they are used, so check the identification marks before installation.

Place of application			Identification mark
Front door		Upper hinge	F
		Lower hinge	E
Rear door	RH	Upper hinge	X
		Lower hinge	Z
	LH	Upper hinge	W
		Lower hinge	Y

DOOR TRIM AND WATERPROOF FILM

M42MBBF

REMOVAL AND INSTALLATION

<Front door>

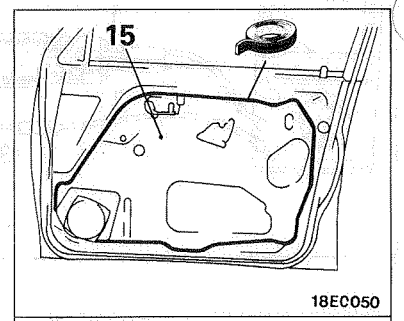

Sealant:
3M ATD Part No. 8625 or equivalent

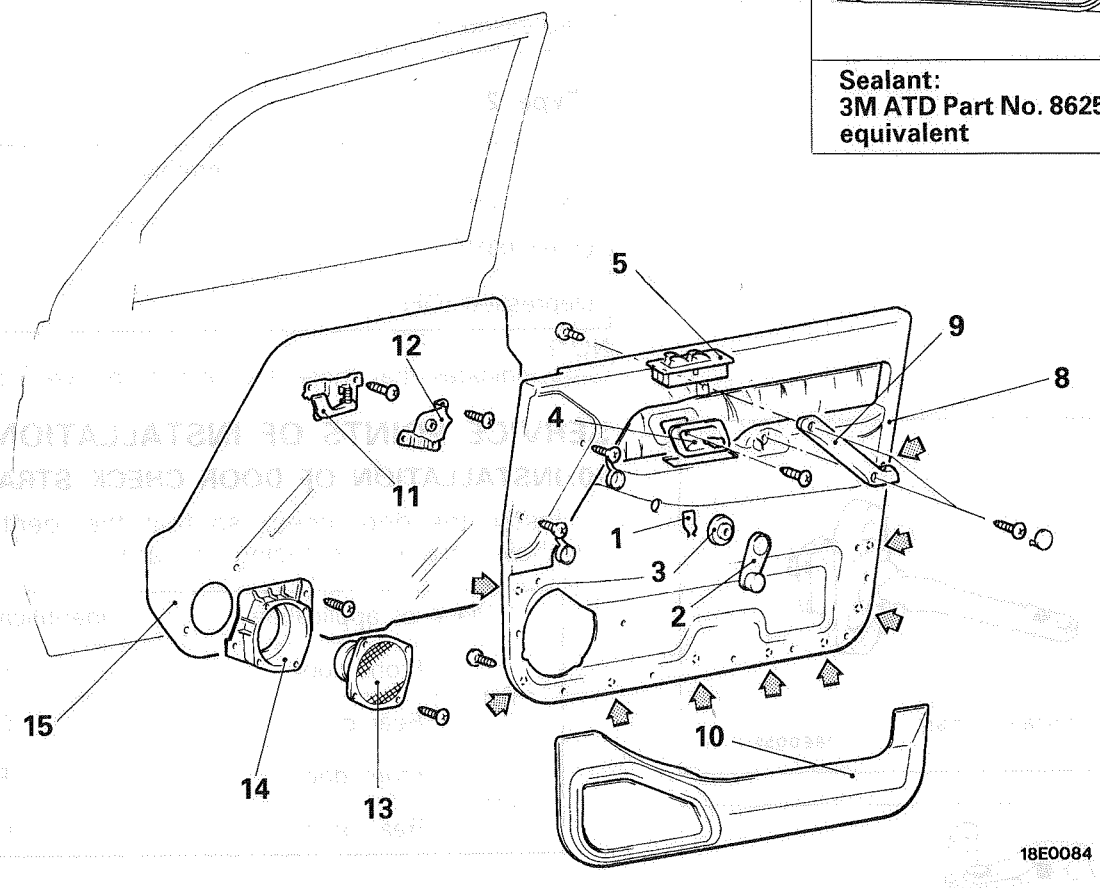

Removal steps

◀■▶ 1. Clip
2. Regulator handle
3. Escutcheon
4. Inside handle cover
5. Power window switch
8. Door trim
9. Door grip
10. Door pocket
11. Inside handle
12. Armrest bracket
13. Speaker
14. Speaker cover
15. Waterproof film

NOTE
◀ : Indicates the clip positions

<Rear door>

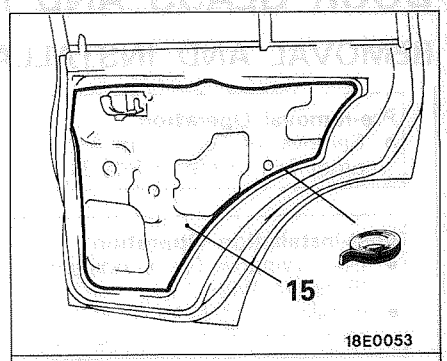

Sealant:
3M ATD Part No. 8625 or equivalent

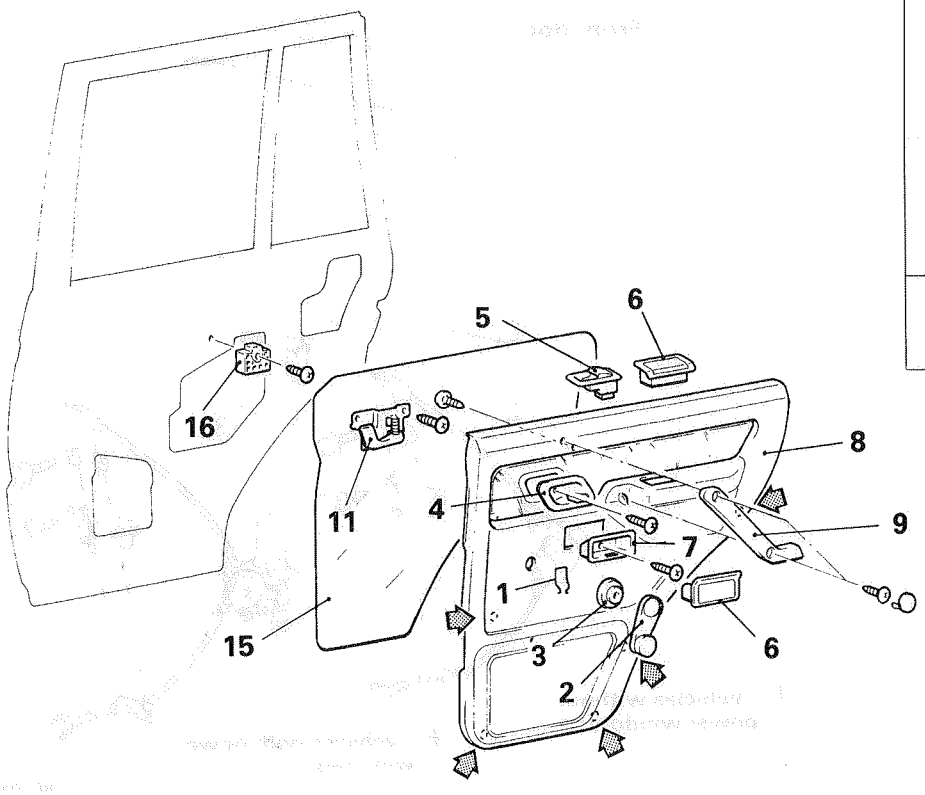

Removal steps

1. Clip
2. Regulator handle
3. Escutcheon
4. Inside handle cover
5. Power window switch
6. Ashtray
7. Ashtray bracket
8. Door trim
9. Door grip
11. Inside handle
15. Waterproof film
16. Screw grommet

NOTE
◀ : Indicates the clip positions

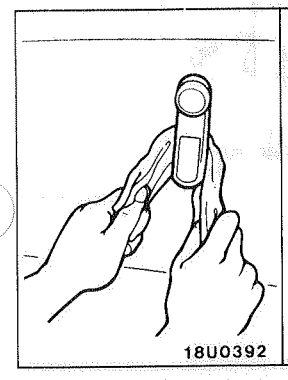

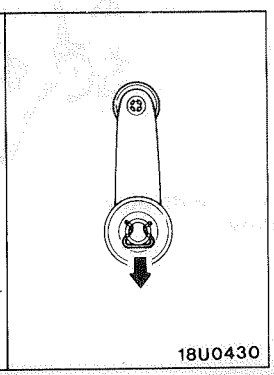

SERVICE POINT OF REMOVAL

1. REMOVAL OF CLIP

Remove the clip by using a rag, and then remove the regulator handle.

DOOR GLASS AND REGULATOR

M42MCBM

REMOVAL AND INSTALLATION

Pre-removal Operation
- Removal of Door Trim and Waterproof Film (Refer to P42-34.)

Post-installation Operation
- Door Window Glass Adjustment (Refer to P42-17.)
- Installation of Door Trim and Waterproof Film (Refer to P.42-34.)

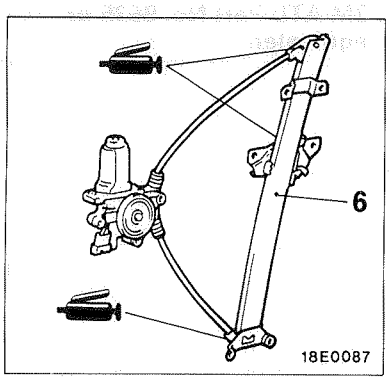

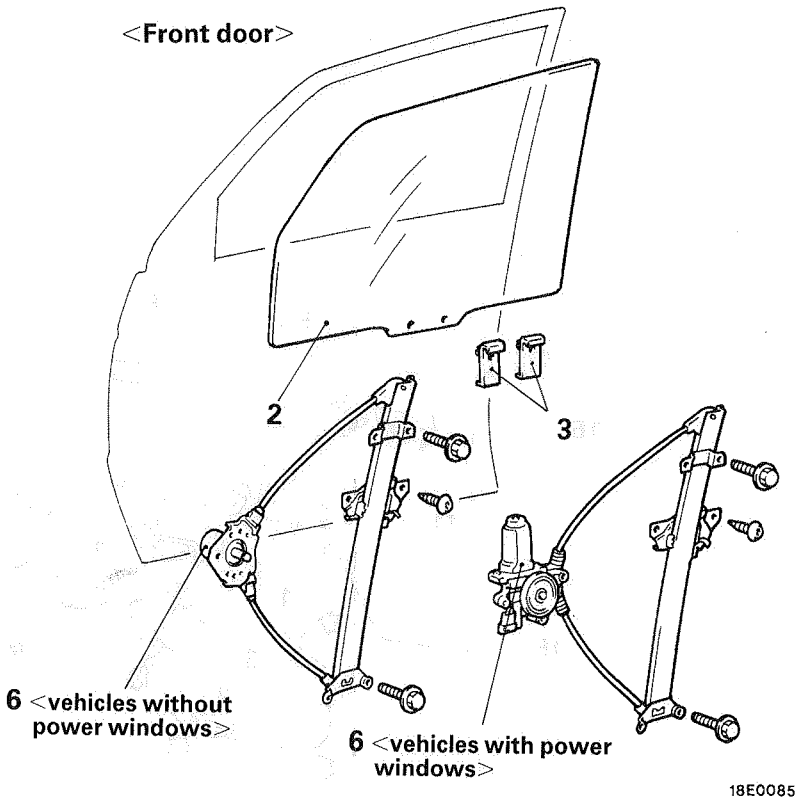

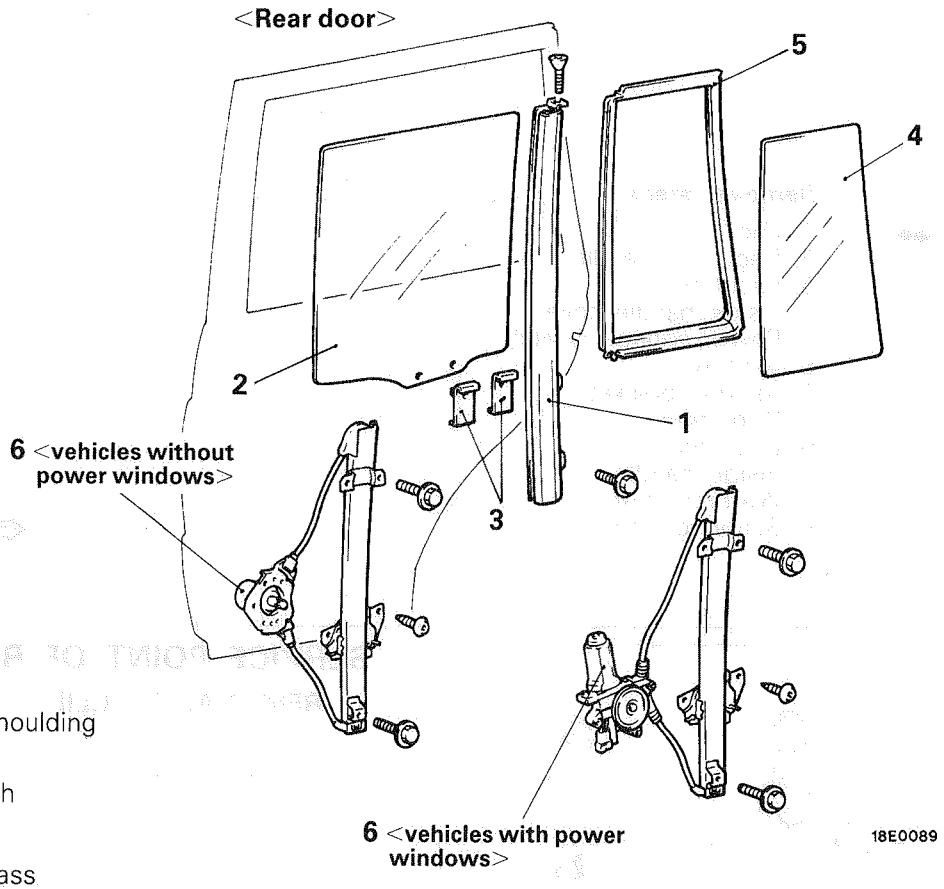

Removal steps
- Rear door belt line moulding (Refer to P.42-42.)

1. Rear door center sash
2. Door window glass
3. Door glass holder
4. Stationary window glass
5. Stationary window weatherstrip
6. Window regulator assembly

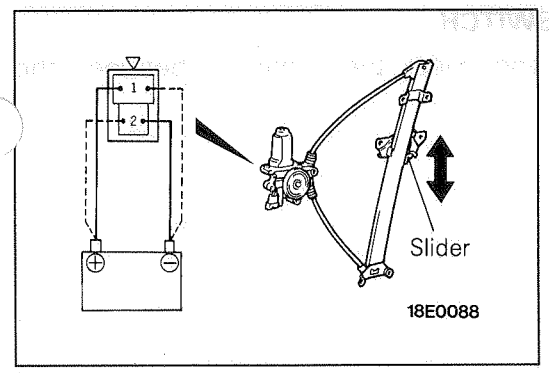

INSPECTION

POWER WINDOW MOTOR

(1) Check if the slider moves smoothly when the battery is directly connected to the motor terminals.
(2) Check if the slider moves in the opposite direction when the battery is connected with the polarities reversed.

CIRCUIT BREAKER (INCORPORATED IN THE POWER WINDOW MOTOR)

(1) Press the UP switch to fully close the window glass, and continue to press the switch for 10 seconds.
(2) At the moment that the UP switch is released, press the DOWN switch. The circuit breaker can be considered good if at this time the door window glass begins to open within 60 seconds.

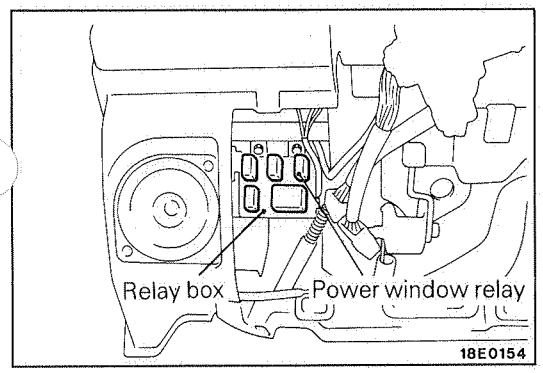

POWER WINDOW RELAY

(1) Remove the power window relay from the relay box.

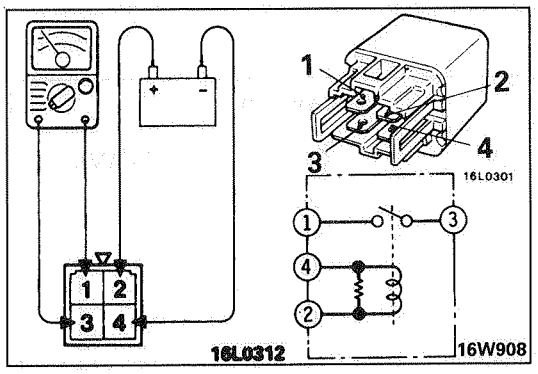

(2) Check for continuity between the terminals.

When there is no current	Between terminals ②-④	Continuity
	Between terminals ①-③	No continuity
When there is current (Between terminals ②–④)	Between terminals ①-③	Continuity

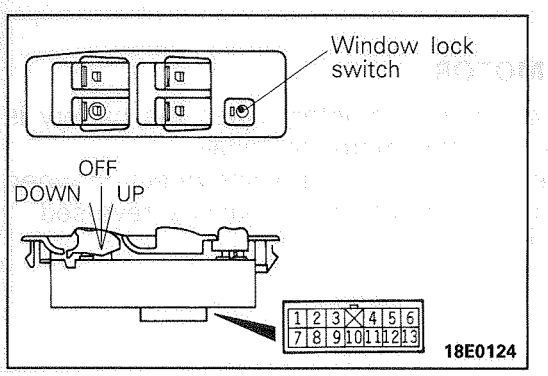

POWER WINDOW SWITCH

Operate the switch and check the continuity between the terminals.

Main switch

Terminal		Switch position: Power window switch (normal) UP	OFF	DOWN	Power window switch (lock) UP	OFF	DOWN
Front (Driver's side)	9	○		○	○		○
	2	○	○	○–○	○	○	○–○
	8	○	○	○–○	○	○	○–○
	13	○	○	○	○	○	○
Front (Passenger's side)	9	○		○	○		○
	1	○	○	○–○	○	○	○–○
	7	○	○	○–○		○	○–○
	13	○	○	○			
Rear (RH)	9	○		○	○		○
	5	○	○	○–○	○	○	○–○
	12	○	○	○–○		○	○–○
	13	○	○	○			
Rear (LH)	9	○		○	○		○
	4	○	○	○–○	○	○	○–○
	11	○	○	○–○		○	○–○
	13	○	○	○			

NOTE
○–○ indicates that there is continuity between the terminals.

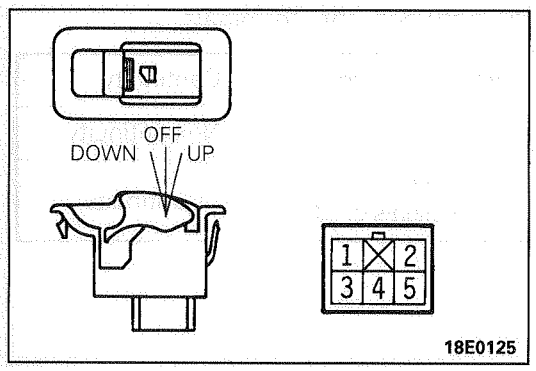

Sub switch

Terminal		Switch position: Sub-switch UP	OFF	DOWN
Sub-switch	1	○	○	
	2	○	○	○–○
	3	○	○	○–○
	4	○		○–○
	5		○	○

NOTE
○–○ indicates that there is continuity between the terminals.

DOOR HANDLE AND LATCH

REMOVAL AND INSTALLATION

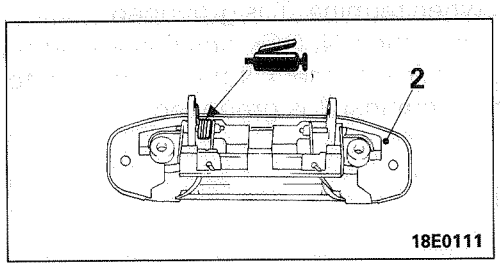

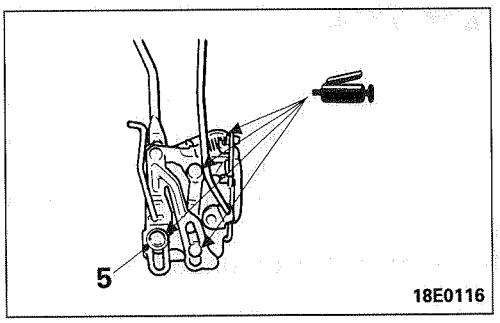

<Front door>

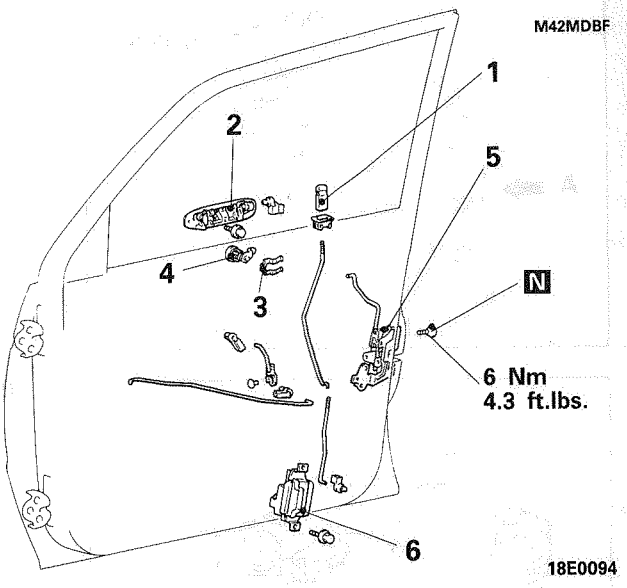

<Rear door>

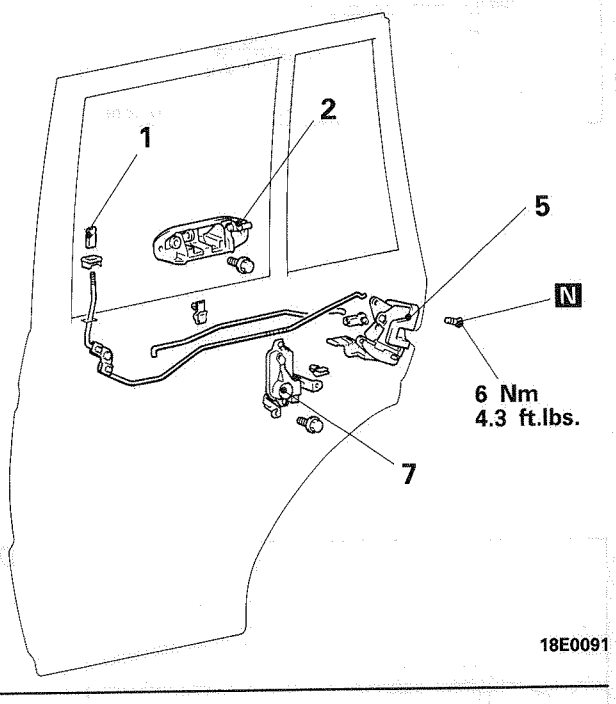

Removal steps

- Door trim
- Waterproof film } (Refer to P.42-34.)
- Door outside handle play inspection (Refer to P.42-17.)

1. Inside lock knob
2. Door outside handle
3. Retainer
4. Door lock key cylinder
5. Door latch assembly
6. Front door lock actuator
7. Rear door lock actuator

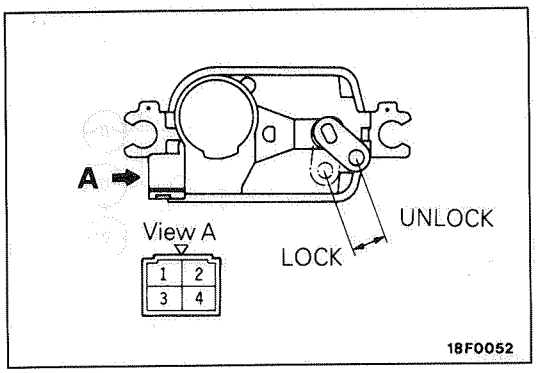

INSPECTION

FRONT DOOR LOCK ACTUATOR

<LH>

(1) After setting the rod to the LOCK position, apply battery voltage to terminal ① and check if the rod moves to the UNLOCK position when terminal ③ is grounded.

(2) After getting the rod to the UNLOCK position and applying battery voltage to terminal ③, check if the rod moves to the LOCK position when terminal ① is grounded.

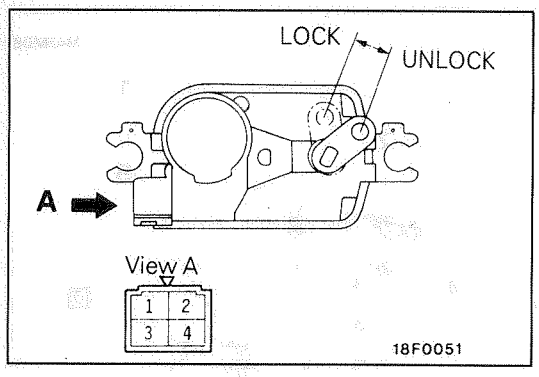

<RH>
(1) After setting the rod to the LOCK position and applying battery voltage to terminal ③, check if the rod moves to the UNLOCK position when terminal ① is grounded.
(2) After setting the rod to the UNLOCK position and applying battery voltage to terminal ①, check if the rod moves to the LOCK position when terminal ③ is grounded.

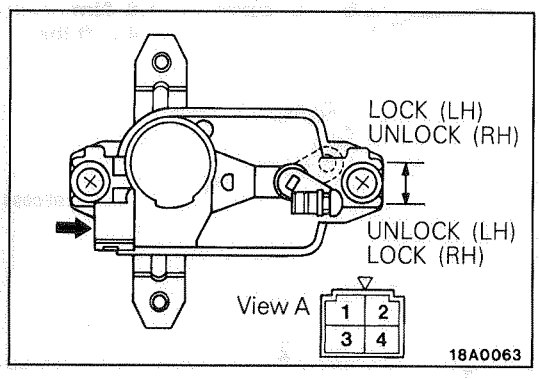

REAR DOOR LOCK ACTUATOR

<LH>
(1) After setting the rod to the LOCK position and applying battery voltage to terminal ③, check if the rod moves to the UNLOCK position when terminal ① is grounded.
(2) After setting the rod to the UNLOCK position and applying battery voltage to terminal ①, check if the rod moves to the LOCK position when terminal ③ is grounded.

<RH>
(1) After setting the rod to the LOCK position, apply battery voltage to terminal ① and check if the rod moves to the UNLOCK position when terminal ① is grounded.
(2) After setting the rod to the UNLOCK position and applying battery voltage to terminal ③, check if the rod moves to the LOCK position when terminal ③ is grounded.

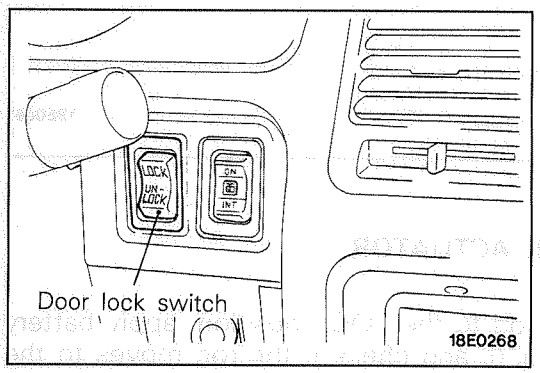

DOOR LOCK SWITCH

(1) Remove the door lock switch from the instrument panel.

(2) Operate the switch and check the continuity between the terminals.

Switch position \ Terminal	2	3	7	1	*	4
LOCK	○—○			○	—○—	○
OFF				○	—○—	○
UNLOCK	○	——	○	○	—○—	○

NOTE
(1) ○—○ indicates that there is continuity between terminals.
(2) *: Illumination light

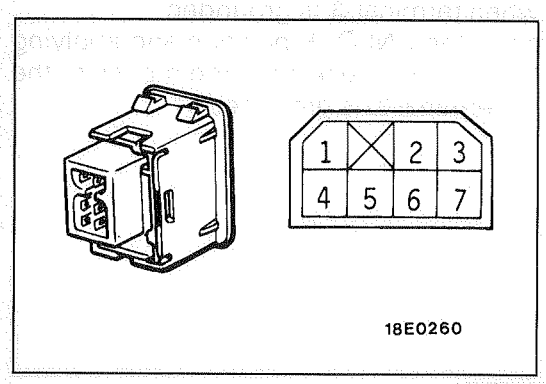

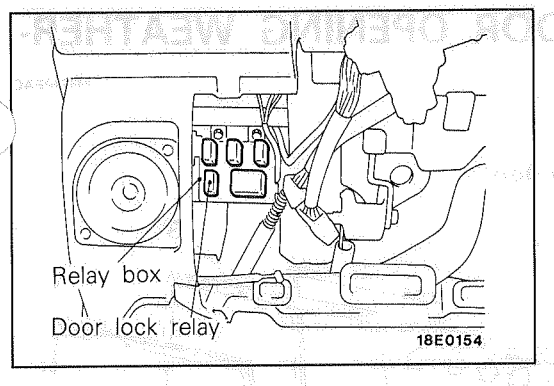

DOOR LOCK RELAY

(1) Remove the door lock relay from the relay box.

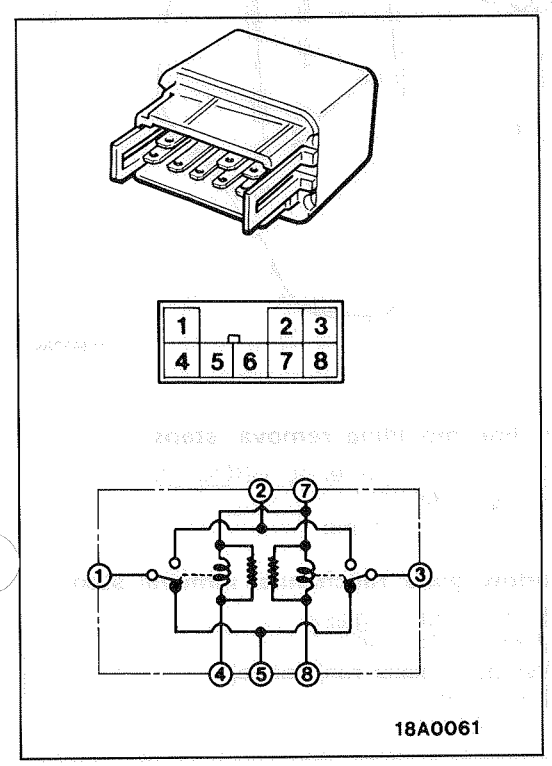

(2) Check for continuity between terminals under the conditions described below.

Terminal / Battery voltage	1	2	3	4	5	7	8
Continuity no voltage	○		○	○	○	○	○
Continuity with voltage	○	○		⊖		⊕	
		○	○			⊕	⊖

(1) ○—○ indicates that there is continuity between the terminals.
(2) ⊕···⊖ indicates terminals to which battery voltage is applied.

WINDOW GLASS RUNCHANNEL AND DOOR OPENING WEATHERSTRIP

M42MEAQ

REMOVAL AND INSTALLATION

<Front door>

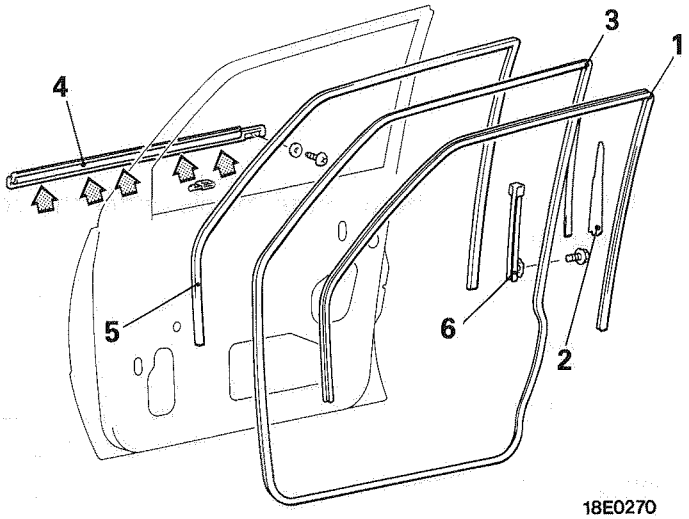

18E0270

<Rear door>

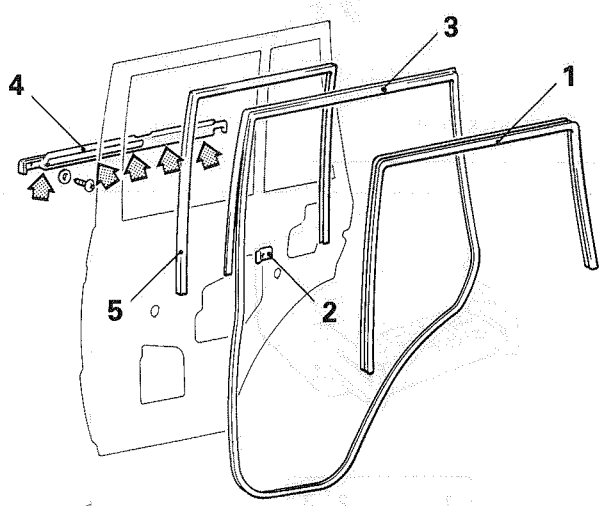

18E0269

NOTE

◀ : Indicates the clip positions

1. Door inner opening weatherstrip

Door outer opening weatherstrip removal steps

2. Weatherstrip protector
3. Door outer opening weatherstrip

Belt line moulding removal steps

- Door mirror (Refer to GROUP 51 – Outside Mirror.)

4. Belt line moulding

Window glass runchannel removal steps

- Door window glass (Refer to P.42-36.)

5. Window glass runchannel
6. Lower rear sash

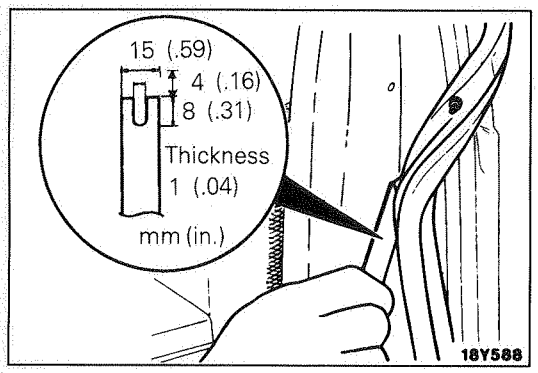

18Y588

SERVICE POINT OF REMOVAL

3. REMOVAL OF DOOR OUTER OPENING WEATHERSTRIP

Make a tool as shown in the illustration to remove the door opening weatherstrip.

SERVICE POINT OF INSTALLATION

3. INSTALLATION OF DOOR OUTER OPENING WEATHERSTRIP

The clip color identifies the left and right weatherstrips, so be sure to use the colors so as to install correctly.

Identification color	Applicable side
White	Left door
Brown	Right door

TSB Revision

BACK DOOR ASSEMBLY

M42OAAT

REMOVAL AND INSTALLATION

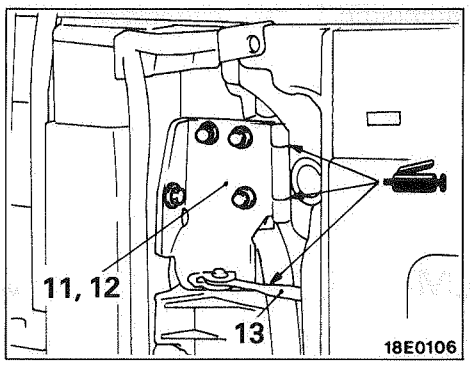

Back Door Post-installation Operation
- Back Door Adjustment (Refer to P.42-17.)

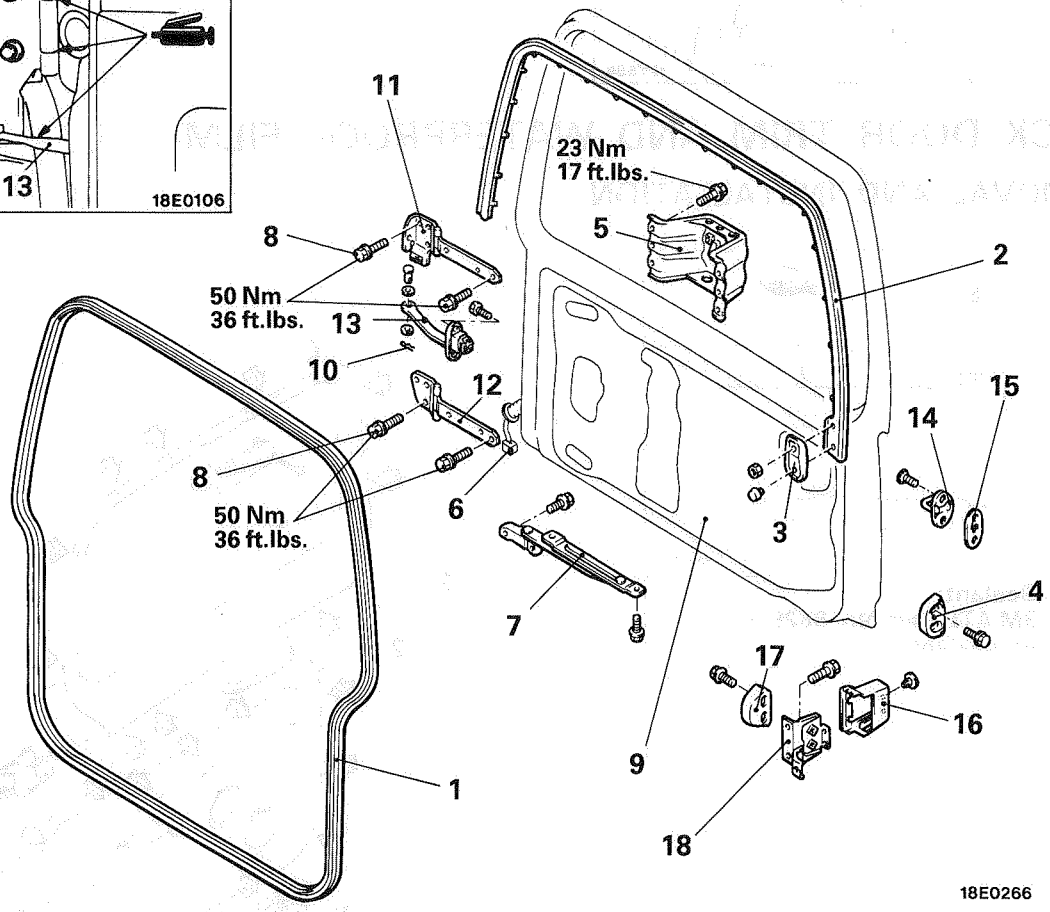

1. Inner opening weatherstrip
2. Outer opening weatherstrip
3. Weatherstrip plate
4. Bumper rubber
5. Spare tyre carrier

Back door removal steps

6. Harness connector
7. Back door stopper
8. Hinge attaching bolt
9. Back door

Hinge removal steps

- Back door trim
- Waterproof film

(Refer to P.42-44.)

9. Back door
10. Split pin
11. Upper hinge
12. Lower hinge

Door check strap removal steps

- Back door trim
- Waterproof film

(Refer to P.42-44.)

10. Split pin
13. Door check strap

Striker removal steps

14. Striker
15. Shim

Back door bumper bracket removal steps

16. Back door bumper cover
17. Back door bumper female
    - Rear combination light
18. Back door bumper bracket

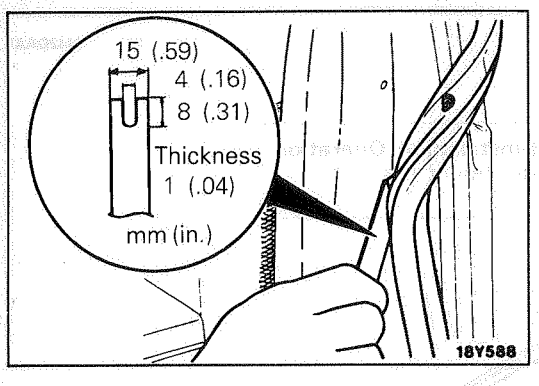

SERVICE POINT OF REMOVAL

2. REMOVAL OF OUTER OPENING WEATHERSTRIP

Make a tool as shown in the illustration to remove the outer opening weatherstrip.

BACK DOOR TRIM AND WATERPROOF FILM

M42OBAJ

REMOVAL AND INSTALLATION

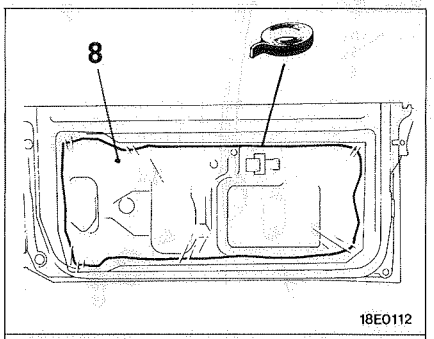

Sealant:
3M ATD Part No. 8625 or equivalent

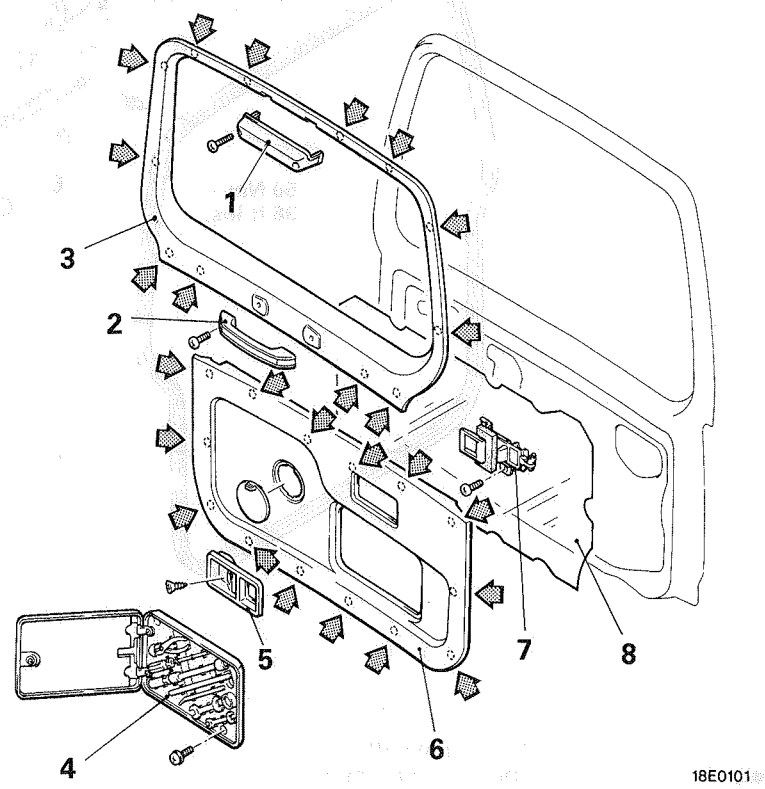

Removal steps

1. Cover
2. Door pull handle
3. Back door upper trim
4. Tool box lid assembly
5. Inside handle cover
6. Back door trim
7. Inside handle
8. Waterproof film

NOTE
◀ : Indicates the clip positions

BACK DOOR HANDLE AND LATCH

M42OCAJ

REMOVAL AND INSTALLATION

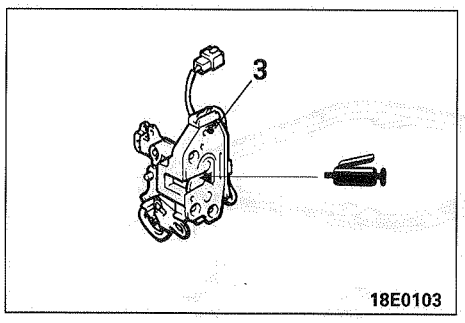

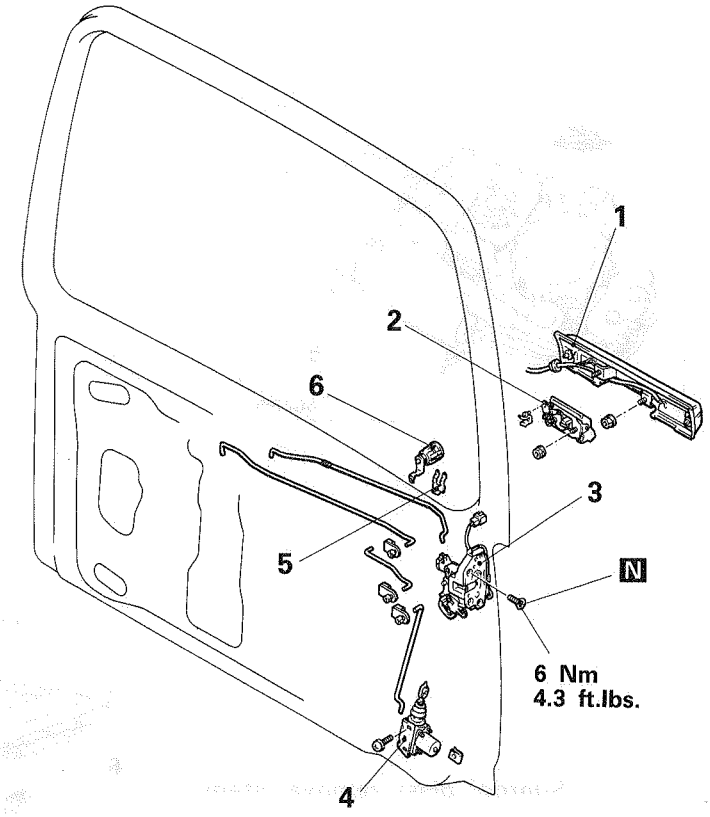

Removal steps

- Back door trim } (Refer to P.42-44.)
- Waterproof film }
- Door outside handle play inspection (Refer to P.42-17.)

1. License plate light garnish
2. Door outside handle
3. Back door latch assembly
4. Back door lock actuator
5. Retainer
6. Back door key cylinder

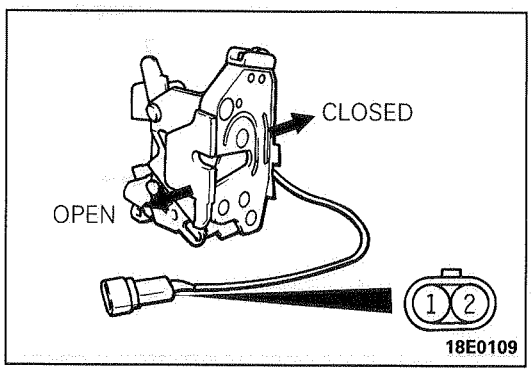

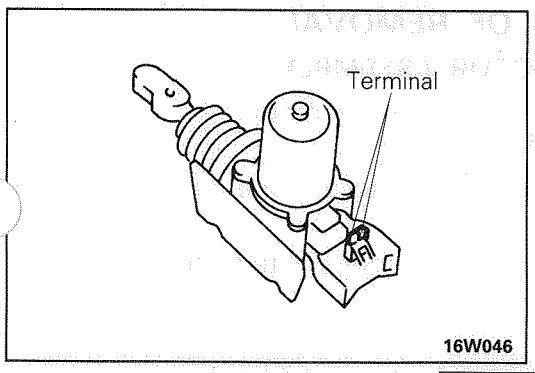

INSPECTION

LATCH SWITCH

Check the continuity between the terminals when the latch is moved.

Terminal / Latch position	1	2
OPEN	○	○
CLOSED		

NOTE
○—○ indicates that there is continuity between the terminals.

BACK DOOR LOCK ACTUATOR

Connect the battery source to the actuator terminal, and check the shaft for operation. If the shaft moves in opposite direction when the connection polarity is changed, the actuator should be considered to be in normal condition.

SUNROOF

M42TAAO

REMOVAL AND INSTALLATION

Post-installation Operation
- Water Test (Refer to P.42-18.)

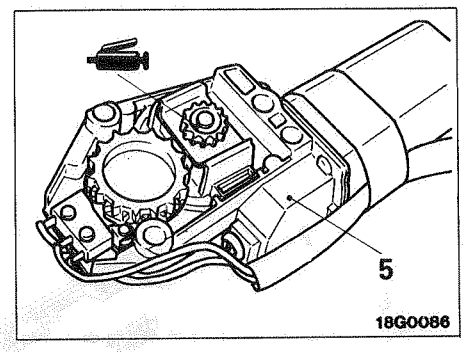

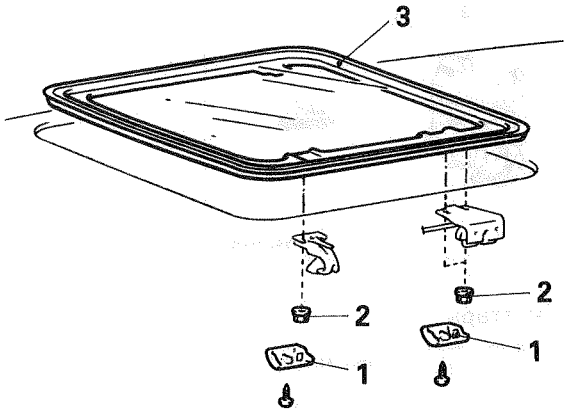

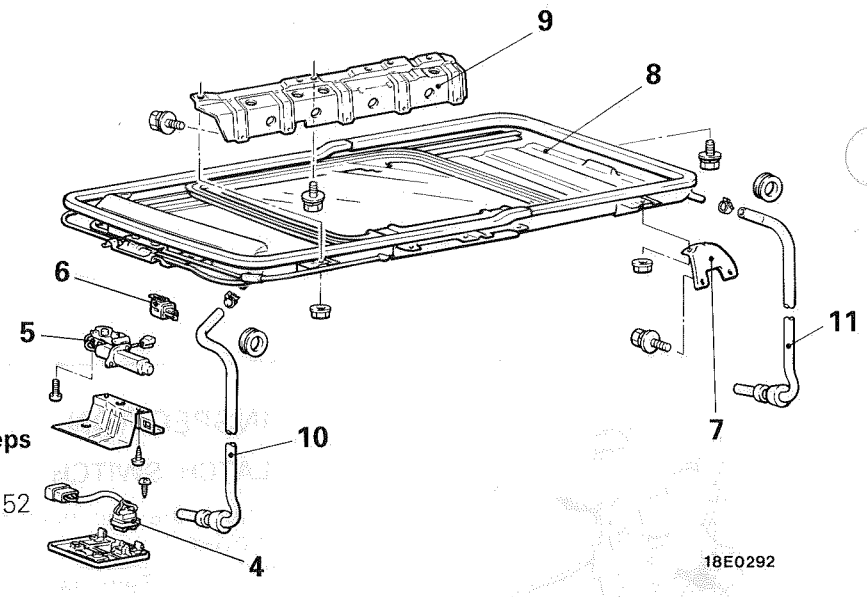

Sunroof glass removal steps
1. Decoration cover
2. Nuts
3. Sunroof glass assembly

Sunroof assembly removal steps
4. Sunroof switch
- Headlining (Refer to GROUP 52 Headlining.)

◀◆ ◆▶ 5. Motor assembly
6. Control unit
7. Rear set bracket
8. Sunroof assembly
9. Front set bracket
◀◆ ◆▶ 10. Front drain hose
◀◆ ◆▶ 11. Rear drain hose

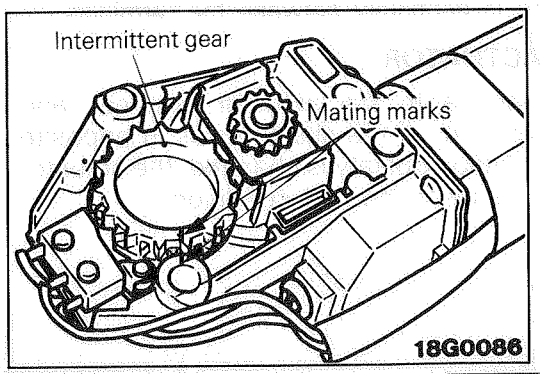

SERVICE POINTS OF REMOVAL

5. REMOVAL OF MOTOR ASSEMBLY

(1) Close sunroof fully. Remove motor.

NOTE
When sunroof does not move, place match marks on roof lid and guide rail.

(2) Place match marks on motor intermittent gear and bracket.

TSB Revision

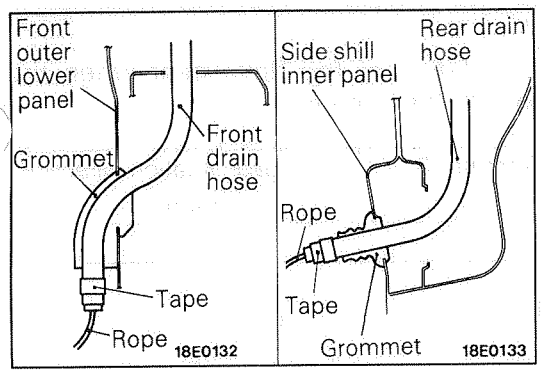

10. REMOVAL OF FRONT DRAIN HOSE/11. REAR DRAIN HOSE

Tie a rope to the end of the drain hose, wind a tape around it so that there is no unevenness, and pull the drain hose into the inside of the passenger compartment.

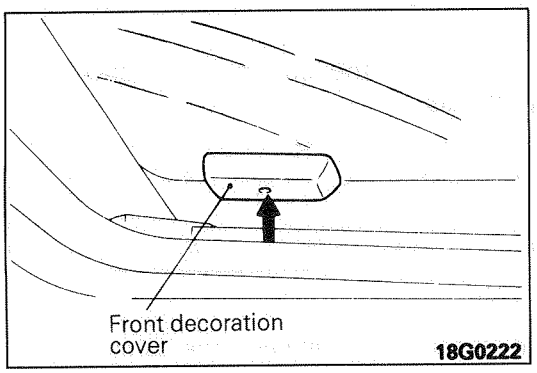

INSPECTION

SUNROOF SLIDING RESISTANCE

(1) Remove front decoration covers.
(2) Remove front guide front nut.
(3) Remove motor assembly.
(4) Fasten string.

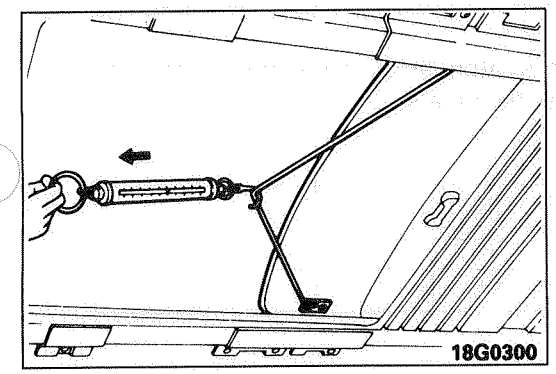

(5) Measure sunroof drive resistance with spring scale.

Standard value: 200 N (44 lbs.) or less

(6) When the resistance exceeds the standard value, check the following.
① Guide rail installation
② Defective or worn guide bracket
③ Seized drive cable
④ Defective drive tube

CLUTCH SLIP FORCE

Inspect the sliding force of the clutch by the following procedure.

(1) Place the hexagonal wrench from the special tools into the hexagonal socket of the motor drive shaft, and use a spring balance to measure the force when the motor clutch starts to slip.

Standard value: 40–50 N (9–11 lbs.)

Caution

1. **The spring balance should be kept a right angle to the wrench.**
2. **If a wrench other than that in the special tools is used, the value for the clutch sliding force will be different, so only the special tool should be used.**

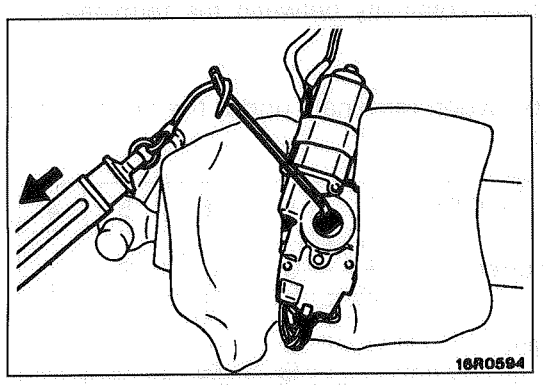

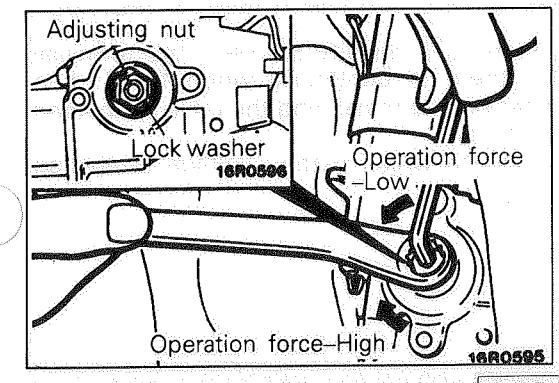

(2) If the clutch sliding force is not within the standard value, turn the motor adjusting nut to the left or right to adjust.
(3) After adjusting, tighten the adjusting nut securely with the lock washer.

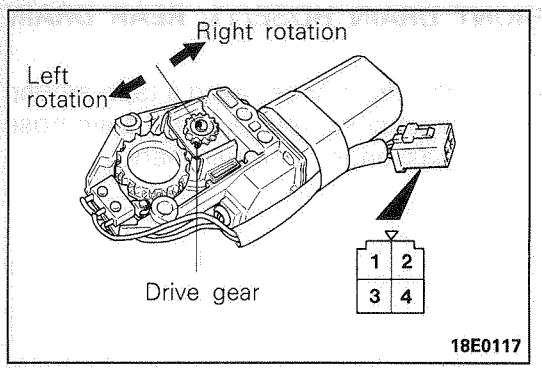

MOTOR

Check the direction of rotation of the drive gear when the connector is connected to the battery.

Terminal 1	Terminal 3	Drive gear rotation direction
+	–	Right
–	+	Left

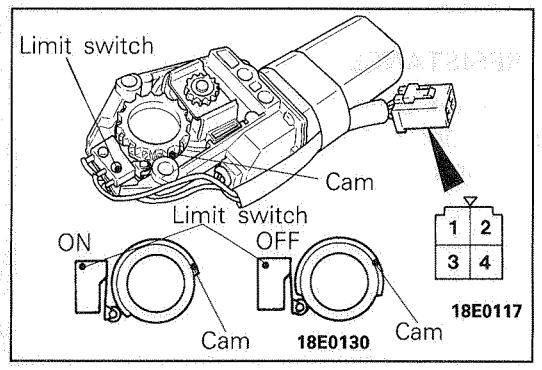

LIMIT SWITCH

Turn over the motor and check the continuity at each of the limit switch terminals.

Switch \ Terminal	2	4
ON		
OFF	○———	———○

NOTE

○–○ Indicates that there is continuity between the terminals.

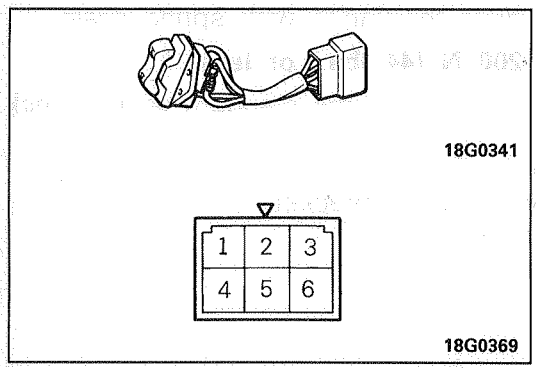

SUNROOF SWITCH

Operate the sunroof switch and check the continuity between each of the terminals.

Switch \ Terminal	1	2	3	5	6
OPEN	○	○		○	○
OFF		○	○	○	○
CLOSED	○	○	○	○	

NOTE

○–○ Indicates that there is continuity between the terminals.

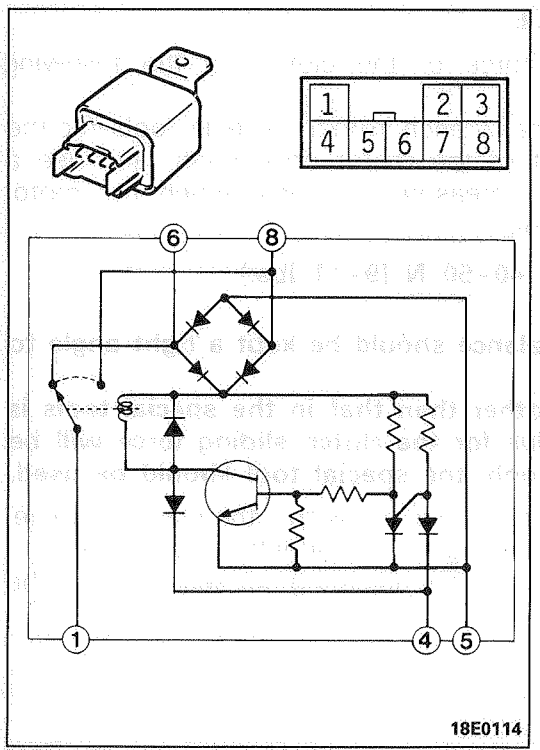

CONTROL UNIT

Check for continuity between terminals under the conditions described below.

Battery voltage \ Terminal	1	8	6	5	4
When there is no current	○ ⊕ ⊖ ○	⊕ ⊖	○ ⊕ ⊖	⊖	⊕
When there is current		⊕ ⊖	⊖ ⊕		

NOTE

(1) ○–○ indicates that there is continuity between the terminals.
(2) ⊕–⊖ indicates that there is continuity when the (+) is connected to the tester plus terminal, and the (–) is connected to the tester minus terminal.
(3) ⊕ ⊖ indicates terminals to which battery voltage is applied.

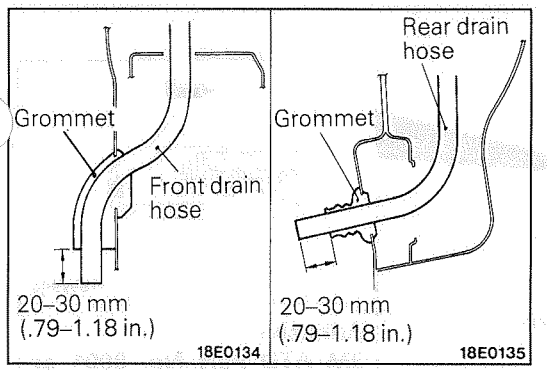

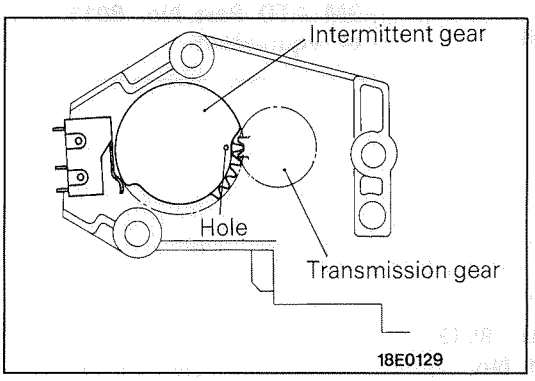

SERVICE POINTS OF INSTALLATION

11. INSTALLATION OF REAR DRAIN HOSE/10. FRONT DRAIN HOSE

(1) Tie the rope that was used during removal to the end of the drain hose, and wind tape around it so that there is no unevenness.
(2) Pull the rope to pull the drain hose through.
(3) Pull the drain hose until the protruding length from the grommet is as shown in the figure.

5. INSTALLATION OF MOTOR ASSEMBLY

When replacing the motor assembly, open the sunroof glass approximately 200 mm (7.9 in.), set the hole of the intermittent gear so that it is aligned between the teeth of the motor assembly transmission gear, and then install the motor assembly.

DISASSEMBLY AND REASSEMBLY

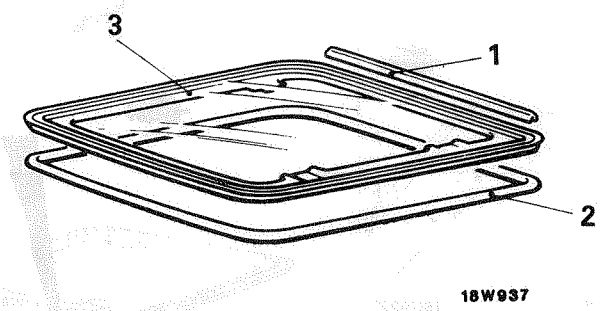

Sunroof glass disassembly steps

1. Screen drip
2. Weatherstrip
3. Sunroof glass

Sunroof assembly disassembly steps

4. Decoration cover
5. Sunroof glass assembly
6. Front guide bracket
7. Deflector assembly
8. Rail end cover
9. Set plate
10. Guide rail assembly
11. Sun shade
12. Drive tube
13. Lifter assembly
14. Slider assembly
15. Sealing tape
16. Housing assembly

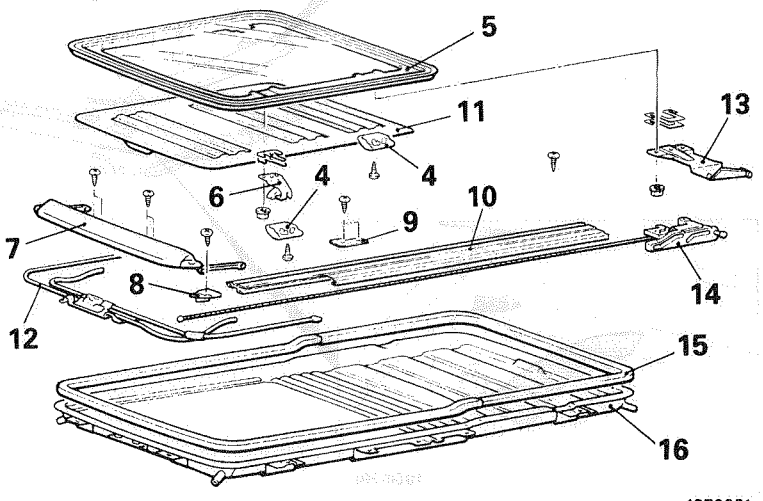

LUBRICATION AND SEALING POINTS

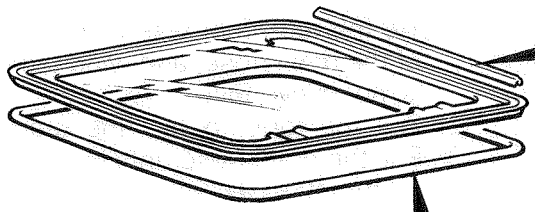

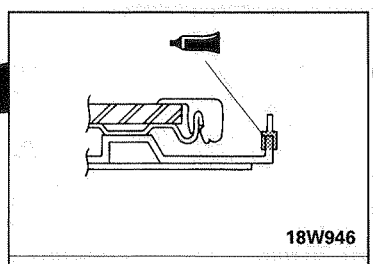

Adhesive:
3M ATD Part No. 8001 or 3M ATD Part No. 8011, or equivalent

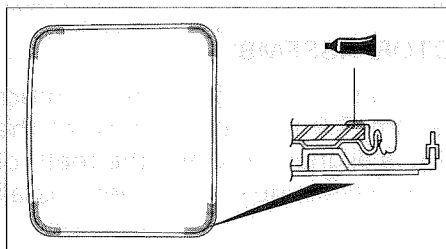

▒ : Adhesive application locations

Adhesive:
3M ATD Part No. 8001 or 3M ATD Part No. 8011, or equivalent

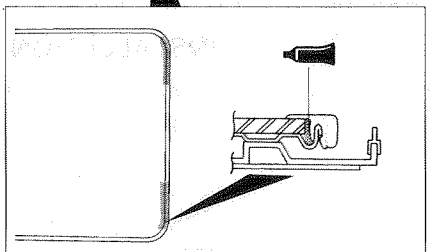

▒ :Sealant application locations

Sealant: 3M ATD Part No. 8513 or 3M ATD Part No. 8509, or equivalent

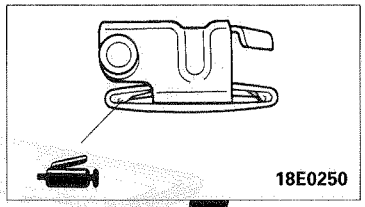

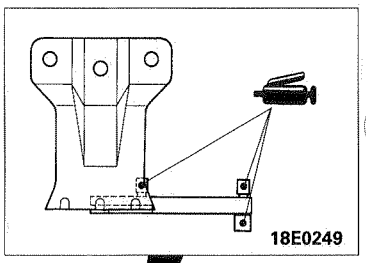

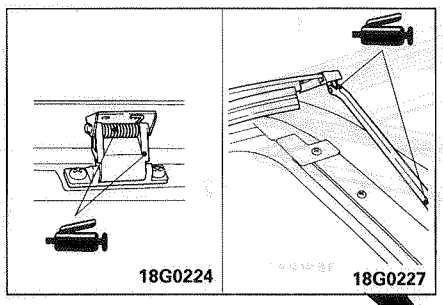

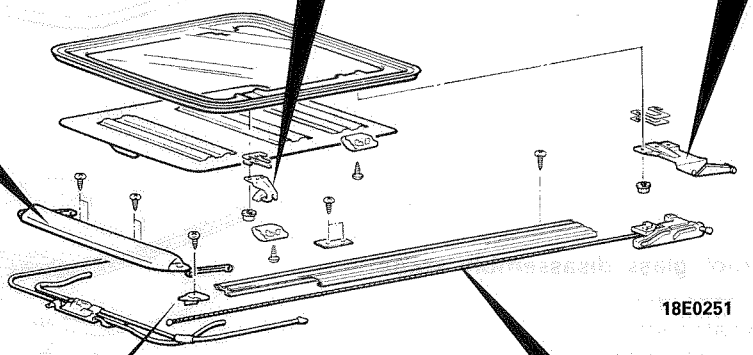

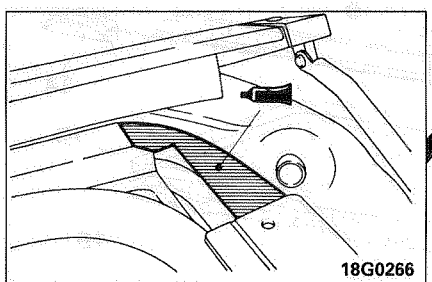

Sealant: 3M ATD Part No. 8531 or 3M ATD Part No. 8646, or equivalent

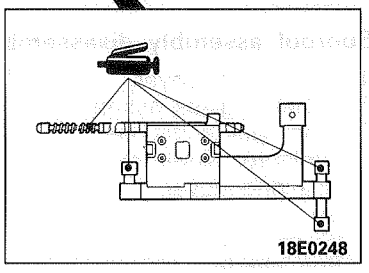

EXTERIOR

CONTENTS

M51AA--

DOOR MIRROR 27

FRONT BUMPER 11

GARNISHES AND MOULDINGS 13

HEADLIGHT WASHER 25

REAR BUMPER 12

REAR WIPER AND WASHER 22

SPECIFICATIONS 2

General Specifications 2

Sealants and Adhesives 3

Service Specifications 3

TROUBLESHOOTING 4

Headlight Washer 8

Rear Wiper and Washer 6

Windshield Wiper and Washer 4

WINDSHIELD WIPER AND WASHER 19

SPECIFICATIONS

GENERAL SPECIFICATIONS

M51CA--

Items		Specifications
Windshield wiper motor		
Revolution speed at load of 1 Nm (0.72 ft.lbs.)	rpm	
Low speed		48 ± 4
High speed		70 ± 7
Nominal torque	Nm (ft.lbs.)	21 (15)
No-load current	A	3.7 or less
Windshield wiper blade		
Wiping angle		
Driver's side		85°
Passenger's side		109°
Wiper blade length	mm (in.)	
Driver's side		475 (18.7)
Passenger's side		475 (18.7)
Windshield washer motor and pump		
Motor type		Direct current ferrite magnet type
Pump type		Centrifugal type
Power consumption	A	4 or less
Time of continuous use	sec.	
With washer fluid		Max. 60
Empty operation		Max. 20
Nozzle jet pressure	kPa (psi)	110 (15.6) or more
Tank capacity	dm^3 (qts.)	3.0 (3.1) or more
Rear wiper motor		
Revolution speed at load of 0.6 Nm (0.43 ft.lbs.)	rpm	38 ± 5
Nominal torque	Nm (ft.lbs.)	10 (7)
Rear wiper blade		
Wiping angle		102°
Wiper blade length	mm (in.)	375 (14.8)
Rear window washer motor and pump		
Motor type		Direct current ferrite magnet type
Pump type		Centrifugal type
Power consumption	A	3.8 or less
Time of continuous use	sec.	
With washer fluid		Max. 60
Empty operation		Max. 20
Nozzle jet pressure	kPa (psi)	120 (17) or more
Tank capacity	dm^3 (qts.)	1.4 (1.5) or more
Intermittent wiper relay		
Intermittent interval	sec.	8 ± 2

Items		Specifications
Headlight washer motor and pump		
Motor type		Direct current ferrite magnet type
Pump type		Centrifugal type
Rated current	A	21 or less
Nozzle injection pressure	kPa (psi)	180 (25.6) or more
Tank capacity	dm^3 (qts.)	3.7 (3.9) or more
Check valve		
Valve opening and closing pressure	kPa (psi)	50–110 (7.1–15.6)
Headlight washer relay		
Timer operation time	sec.	0.33

SERVICE SPECIFICATIONS

M51CB--

Items		Specifications
Standard value		
Windshield wiper blade installation position	mm (in.)	
Driver's side		25–35 (.98–1.38)
Passenger's side		35–45 (1.38–1.77)
Rear wiper blade installation position	mm (in.)	65–75 (2.56–2.95)

SEALANTS AND ADHESIVES

M51CE--

Items	Specifications
Back door lower garnish Back door corner garnish License plate garnish Side garnish Wide fender	3M ATD Part No. 6382 or equivalent

TROUBLESHOOTING

M51KHBO

WINDSHIELD WIPER AND WASHER

CIRCUIT DIAGRAM

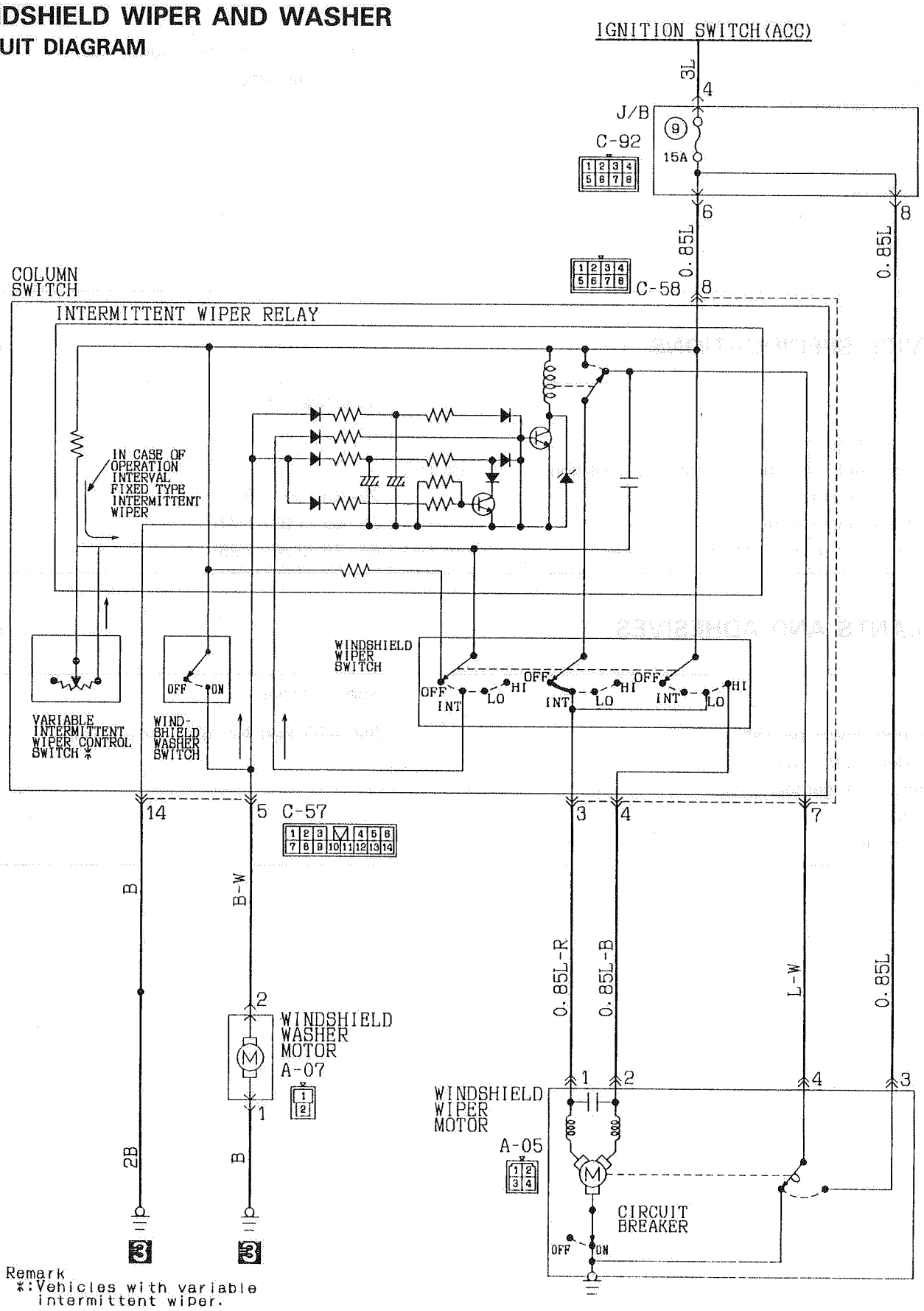

KX35-AC-Q1301-N

TSB Revision

OPERATION

Low-speed (and high-speed) wiper operation

- When the wiper switch is placed in the LO position with the ignition switch in the ACC or ON position, wipers operate continuously at low speed.
- Placing the wiper switch in the HI position causes the wipers to operate at high speed.

Auto wiper stop operation

- When the wiper switch is placed in the OFF position, the cam contacts of wiper motor causes current to flow through the auto wiper stop circuit, allowing the wiper blades to cycle before they reach to the stop positions.

Intermittent wiper operation

- When the wiper switch is placed in the INT position with the ignition switch in ACC or ON position, the intermittent wiper relay is energized causing the intermittent wiper relay contacts to close and open repeatedly.
- When the contacts are closed, the wiper motor is energized.
- When the wiper motor is energized, the relay contacts open; however, the cam contacts keep the wiper motor energized until the wiper blades return to their stop position.

Washer-wiper operation

- When the washer switch is turned ON, the intermittent wiper relay contacts close causing wipers to cycle two to three times.

TROUBLESHOOTING HINTS

1. Wipers do not operate.
   Washer is not operative, either.
   - Check multi-purpose fuse No. ⑨.
   - Check ground
2. Low-speed (or high speed) wiper operation only is inoperative.
   - Check wiper switch.
3. Wipers do not stop.
   - Check wiper motor.
   - Check intermittent wiper relay.
   - Check wiper switch.
4. Intermittent wiper operation is inoperative.
   - Check terminal voltage of steering-column switch (with a built-in intermittent wiper relay) with the intermittent wiper relay energized.

Terminal No.	Voltage	Check
3	0 V	Intermittent wiper relay or wiper switch
	System voltage	Intermittent wiper relay
	0 V ⟷ System voltage (alternating)	— (Normal)

5. The length of pause for intermittent operation cannot be varied.
   - Check variable intermittent wiper control switch.
   - Check intermittent wiper relay.
6. Washer is inoperative.
   (1) Wiper is operative on washer-wiper operation.
   - Check washer motor.
   (2) Washer-wiper operation is inoperative also.
   - Check washer switch.
7. Washer-wiper operation is inoperative.
   - Check intermittent wiper relay.

REAR WIPER AND WASHER

M51KHBP

CIRCUIT DIAGRAM

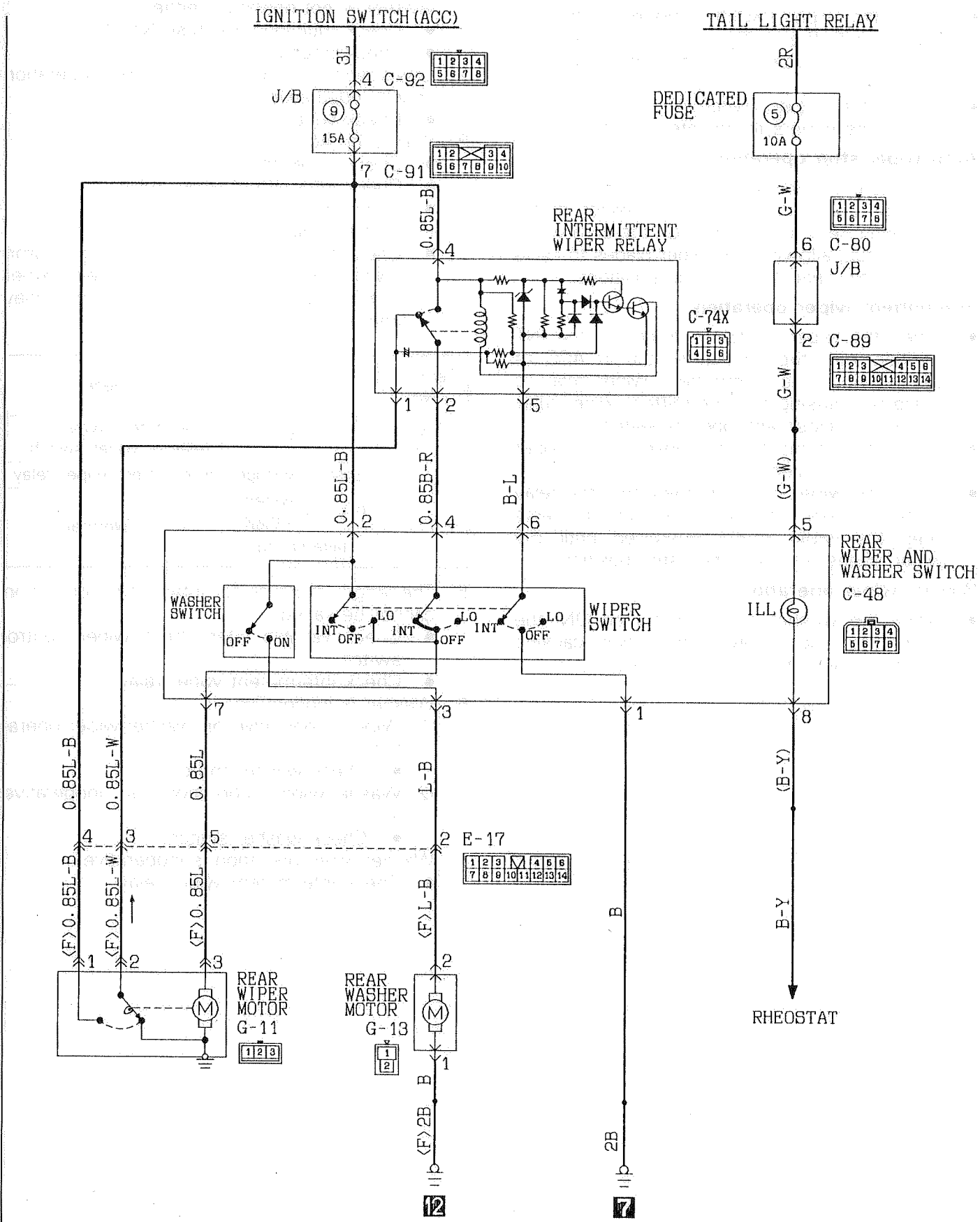

KK35-AC-01302-N

TSB Revision

OPERATION

Low-speed wiper operation

- When the wiper switch is placed in the ON position with the ignition switch in the ACC or ON position, wipers operate continuously at low speed.

Auto wiper stop operation

- When the wiper switch is placed in the OFF position, the cam contacts of wiper motor causes current to flow through the auto wiper stop circuit, allowing the wiper blades to cycle before they reach to the stop positions.

Intermittent wiper operation

- When the wiper switch is placed in the INT position with the ignition switch in ACC or ON position, the intermittent wiper relay is energized causing the intermittent wiper relay contacts to close and open repeatedly.
- When the contacts are closed, the wiper motor is energized.
- When the wiper motor is energized, the relay contacts open; however, the cam contacts keep the wiper motor energized until the wiper blades return to their stop position.

TROUBLESHOOTING HINTS

1. Wipers do not operate.
   - Washer is not operative, either.
   - Check multi-purpose fuse No. ⑨.
   - Check ground
   - Check wiper switch.
2. Wipers do not stop.
   - Check wiper motor.
   - Check intermittent wiper relay.
   - Check wiper switch.
3. Intermittent wiper operation is inoperative.
   - Check terminal voltage of the intermittent wiper relay energized.

Terminal No.	Voltage	Check
7	0 V	Intermittent wiper relay or wiper switch
	System voltage	Intermittent wiper relay
	0 V ⟷ System voltage (alternating)	— (Normal)

4. Washer is inoperative.
   - Check washer motor.
   - Check washer switch

HEADLIGHT WASHER

M51KHBQ

CIRCUIT DIAGRAM

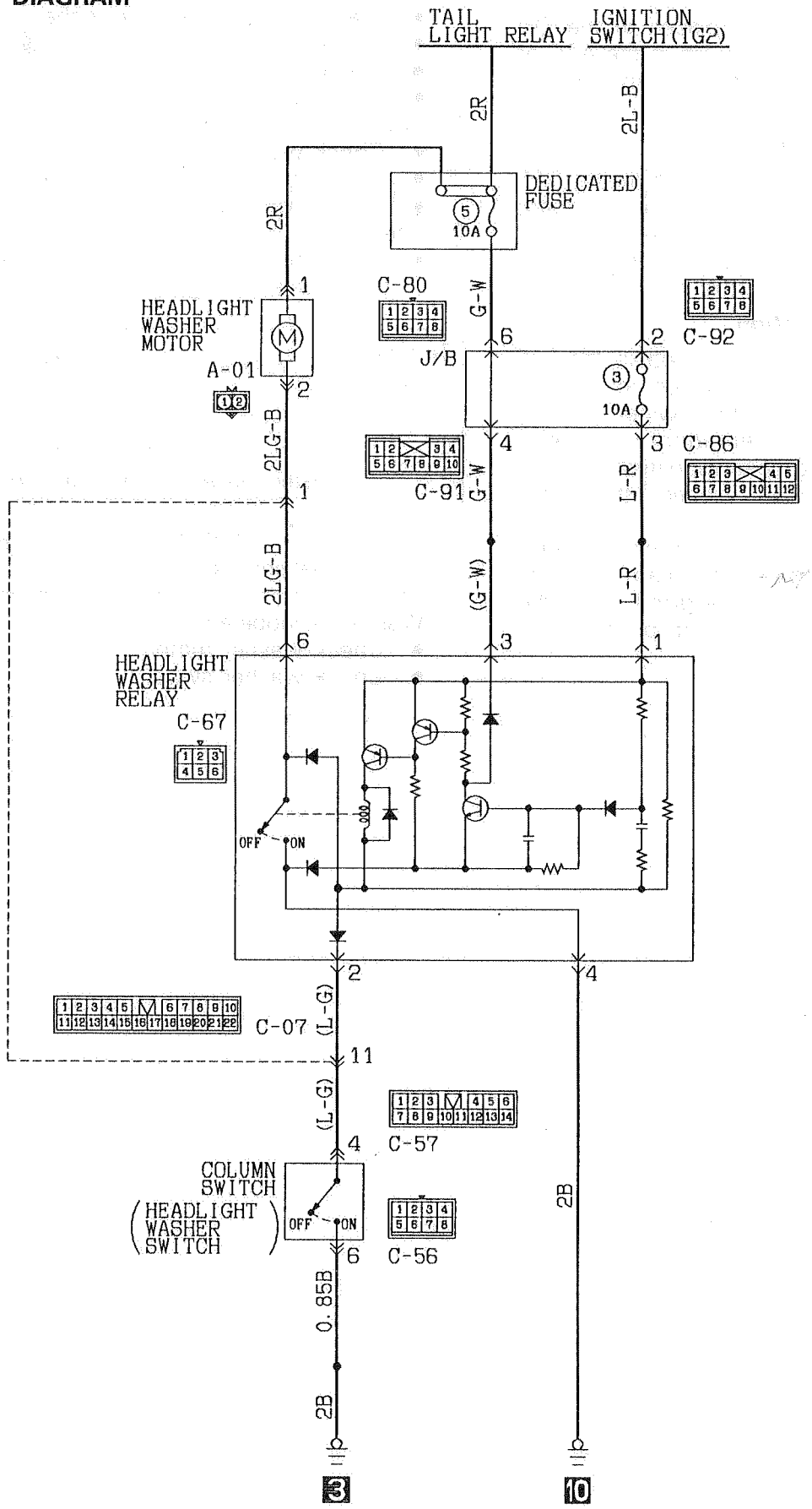

KX35-AC-01303-N

TSB Revision

OPERATION

- When the headlight washer switch is pushed ON with ignition switch in ON and lighting switch in TAIL or HEAD position, the headlight washer relay is energized causing the headlight washer motor to start.

TROUBLESHOOTING HINTS

1. Headlight washer motor does not start.
   (1) Blower motor does not start,either.
      - Check multi-purpose fuse NO. ③.
   (2) Blower motor does not start.
      - Check headlight washer motor.
      - Check headlight washer relay.
      - Check headlight washer switch.

REMOTE CONTROLLED MIRROR

M51EBBG

OPERATION

- When the remote controlled mirror switch is operated while the ignition key is in ACC or ON position, current flows through fuse No. ⑤ remote controlled mirror switch,remote controlled mirror, remote controlled mirror switch, and ground, causing the mirror to move.

TROUBLESHOOTING HINTS

Neither right nor left mirror operates
(1) Also cigarette lighter does not operate
   - Check multi-purpose fuse No. ⑤.
(2) Cigarette lighter operates
   - Check remote controlled mirror switch.

CIRCUIT DIAGRAM

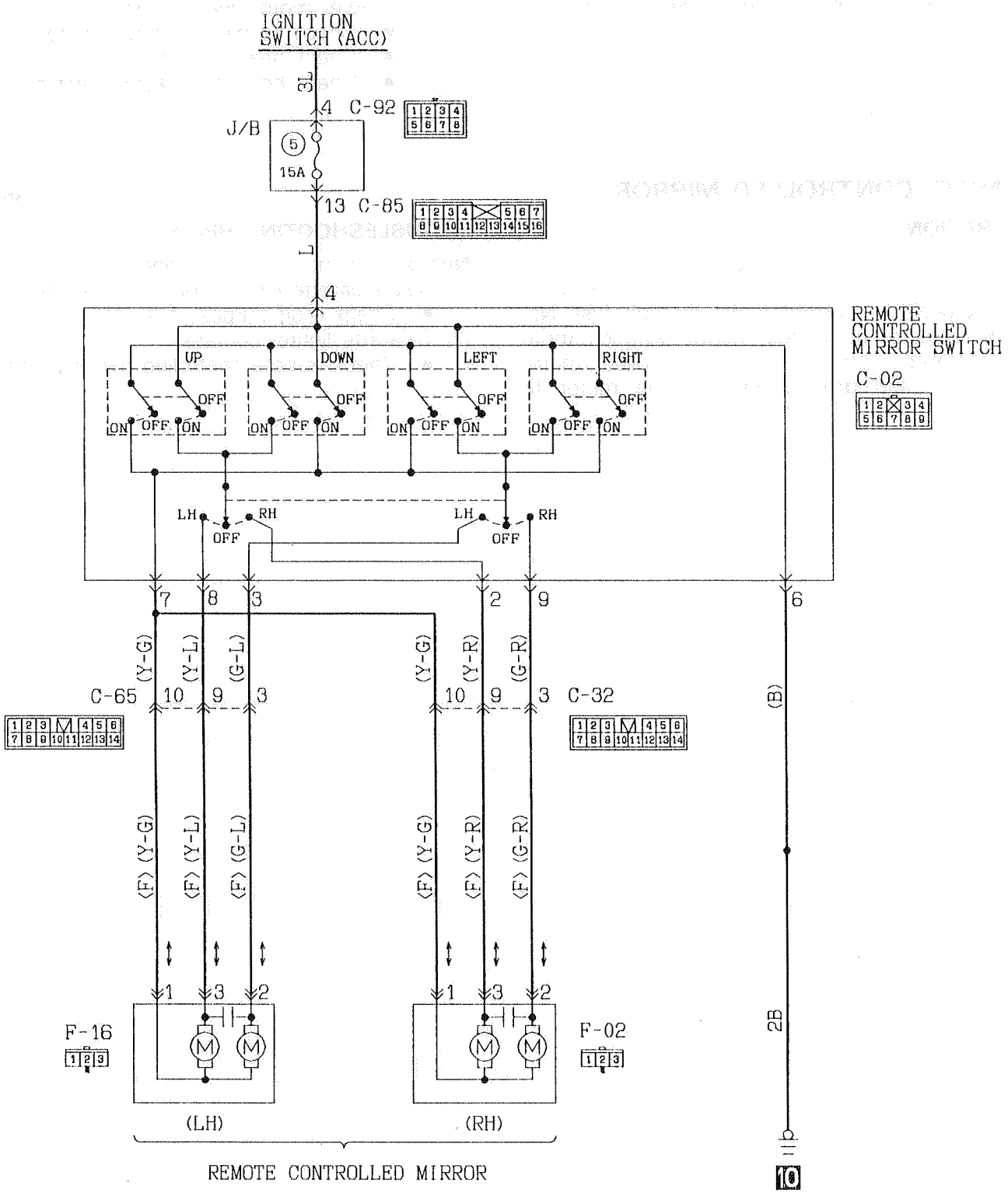

KX35-AC-Q1305-N

TSB Revision

FRONT BUMPER

M51ZABC

REMOVAL AND INSTALLATION

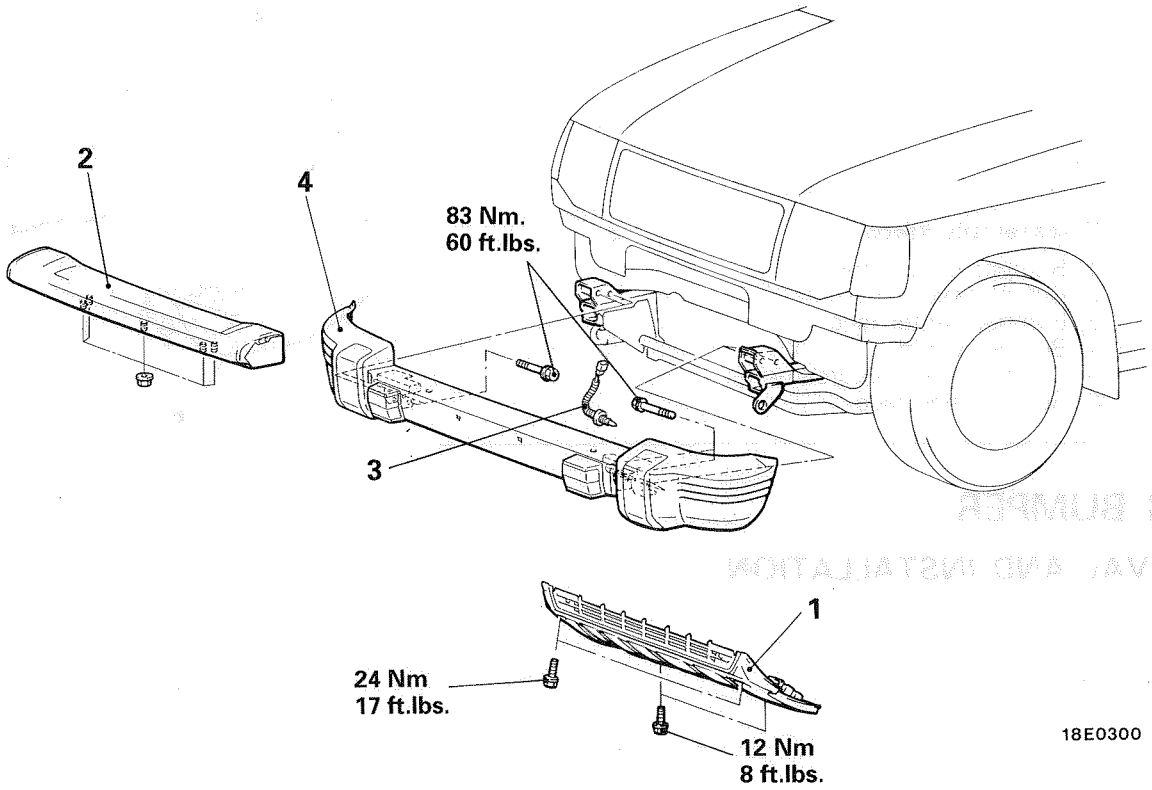

Removal steps

1 . Skid plate
2. Bumper garnish
3. Outside temperature sensor
   <Vehicles with Multi–meter>
➡◀ 4 . Bumper assembly

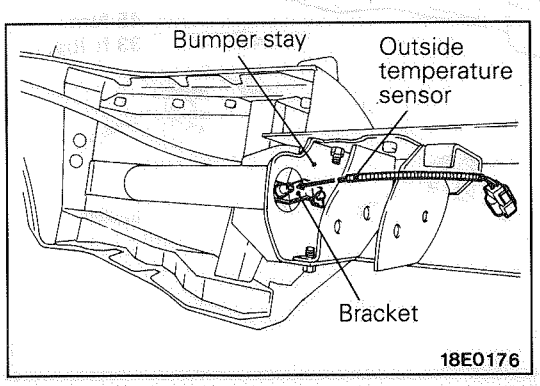

SERVICE POINT OF INSTALLATION

4. INSTALLATION OF BUMPER ASSEMBLY <Vehicles with Multi-meter>

When installing the bumper assembly, insert the sensor section of the outside temperature sensor into the bracket hole installed in the bumper stay.

DISASSEMBLY AND REASSEMBLY

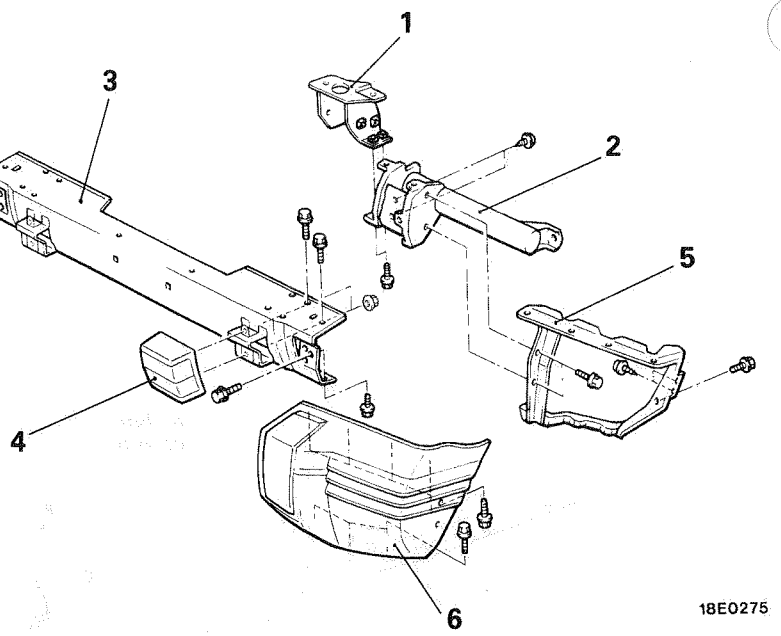

18E0275

Disassembly steps

1. Bumper mount bracket
2. Bumper stay
3. Bumper center face
4. Bumper guard
5. Bumper side reinforcement
6. Bumper side face

REAR BUMPER

M51ZABD

REMOVAL AND INSTALLATION

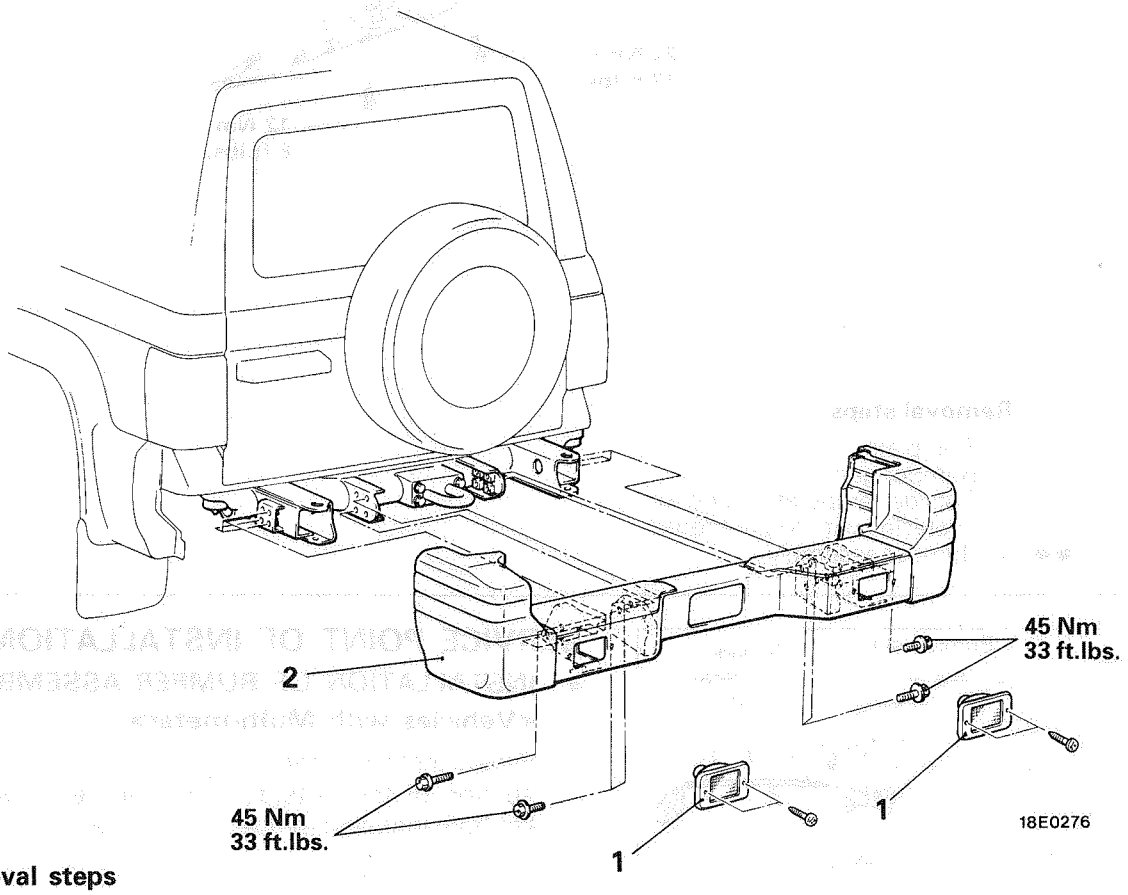

18E0276

Removal steps

1. Back-up lights
2. Bumper assembly

DISASSEMBLY AND REASSEMBLY

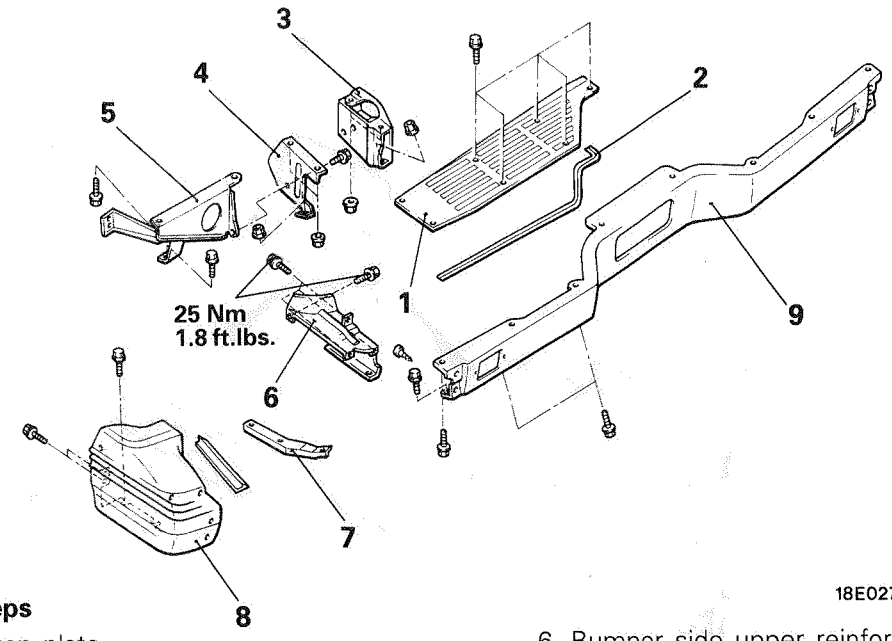

18E0277

Removal steps

1. Bumper step plate
2. Weatherstrip
3. Bumper stay A
4. Bumper stay B
5. Bumper reinforcement
6. Bumper side upper reinforcement
7. Bumper side lower reinforcement
8. Bumper side face
9. Bumper center face

GARNISHES AND MOULDINGS

M51RDAJ

EXCEPT SIDE GARNISH AND WIDE FENDER

REMOVAL AND INSTALLATION

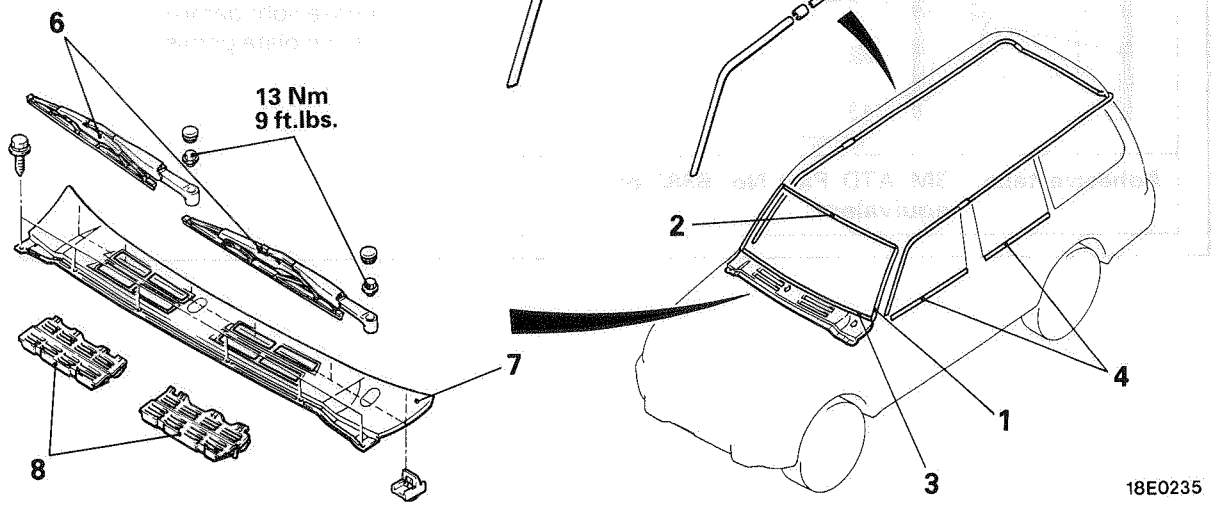

18E0235

1. Windshield side moulding
2. Windshield upper moulding
3. Windshield lower moulding

[Refer to GROUP 42–Windshield.]

4. Belt line moulding [Refer to GROUP 42–Window Glass Runchannel and Door Opening Weatherstrip.]
5. Drip moulding

Removal steps of front deck garnish

- Hood [Refer to GROUP 42–Hood.]

6. Wiper arm assembly
7. Front deck garnish
8. Air intake garnish

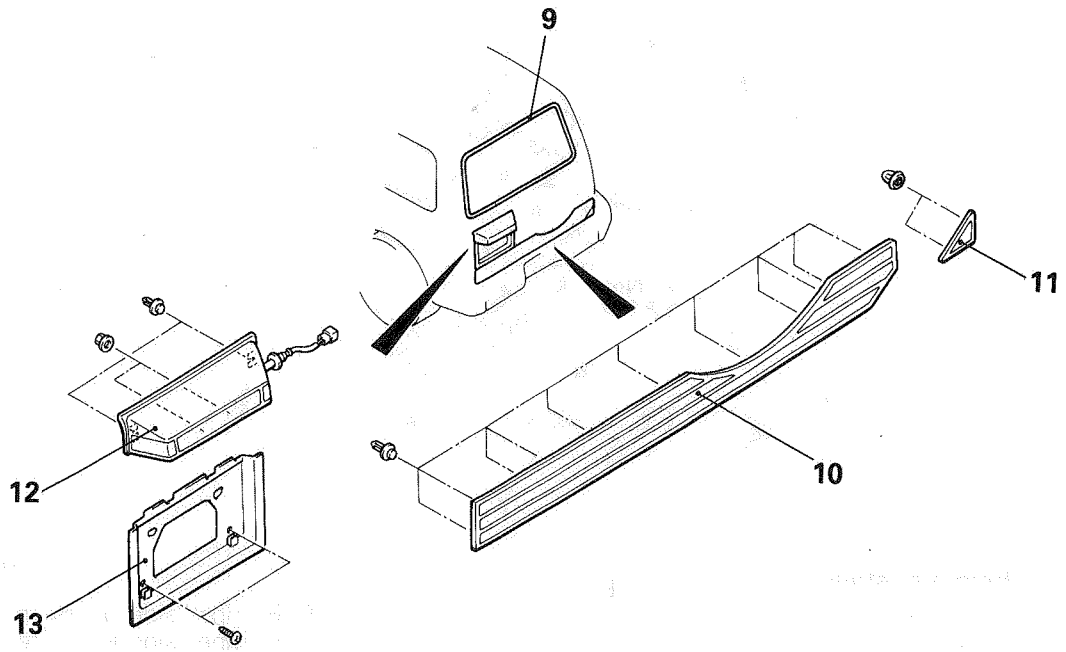

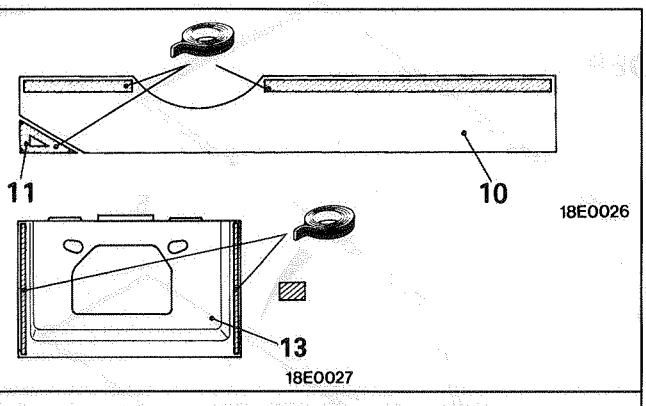

Adhesive tape: 3M ATD Part No. 6382 or equivalent

9. Back door window glass moulding [Refer to GROUP 42–Back Door Window Glass.]
10. Back door lower garnish
11. Back door corner garnish

License light garnish removal steps

- Back door trim [Refer to GROUP 42–Back Door Trim and Waterproof Film.]

12. License light garnish
13. License plate garnish

SIDE GARNISH AND WIDE FENDER REMOVAL AND INSTALLATION

M51RDAK

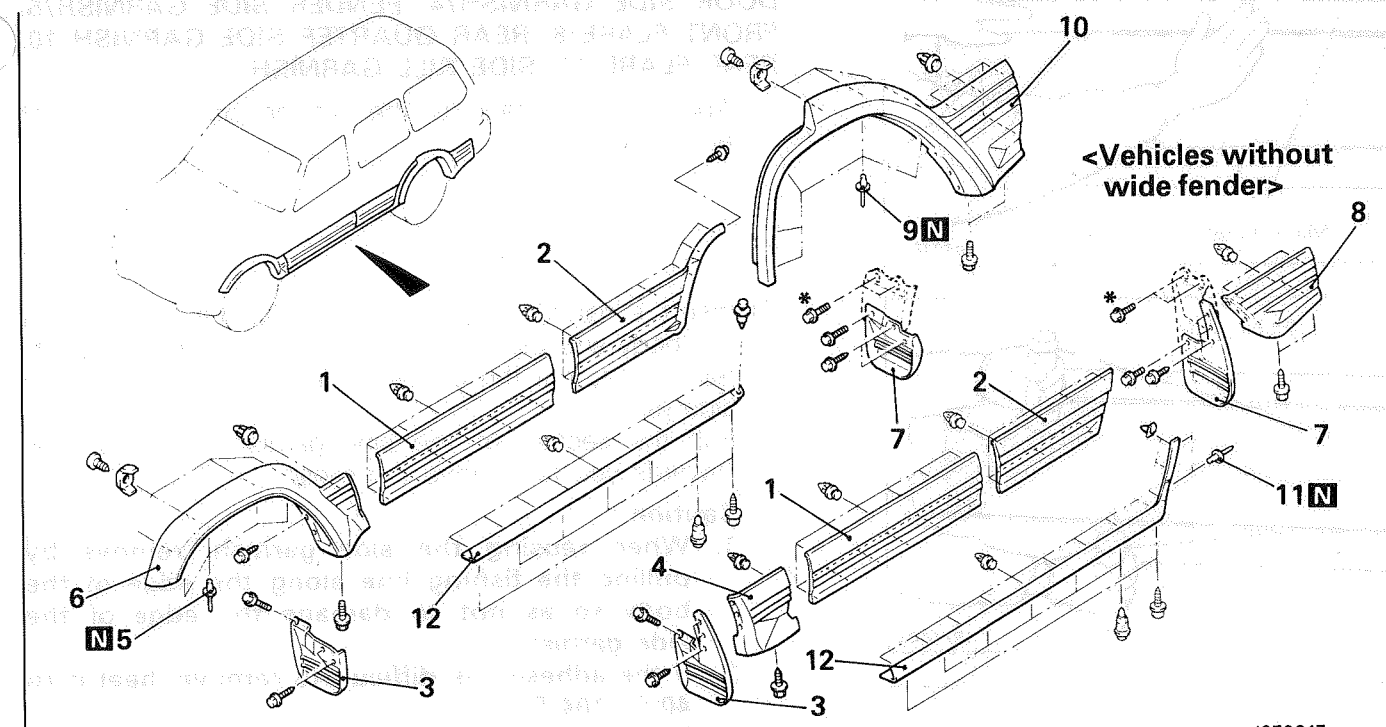

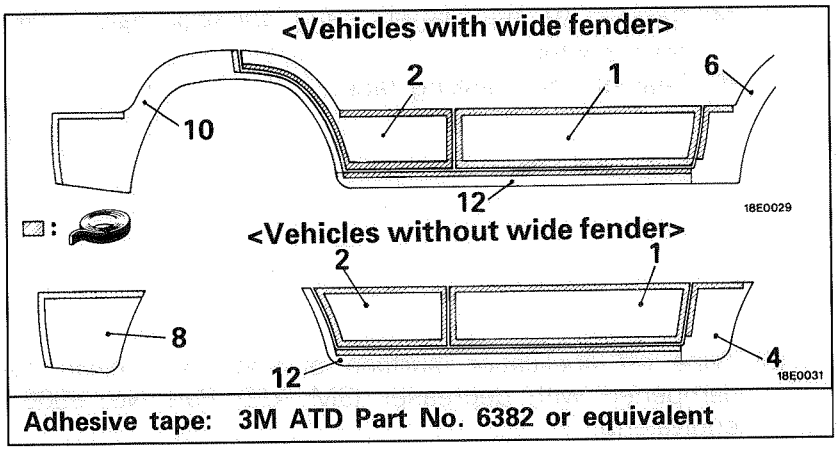

Adhesive tape: 3M ATD Part No. 6382 or equivalent

NOTE
Mounting bolts with * marks indicate R.H. side only.

Removal steps of front door side garnish
1. Front door side garnish

Removal steps of rear door side garnish
2. Rear door side garnish

Removal steps of fender side garnish
3. Front mud guard
4. Fender side garnish

Removal steps of front flare
- Splash shield (Refer to GROUP 42–Fender.)

5. Blind rivet
6. Front flare

Removal steps of rear quarter side garnish
7. Rear mud guard
8. Rear quarter side garnish

Removal steps of rear flare
7. Rear mud guard
9. Blind rivet
10. Rear flare

Removal steps of side sill garnish <Vehicles without wide fender>
4. Fender side garnish
11. Blind rived
12. Side sill garnish

Removal steps of side sill garnish <Vehicles with wide fender>
6. Front flare
12. Side sill garnish

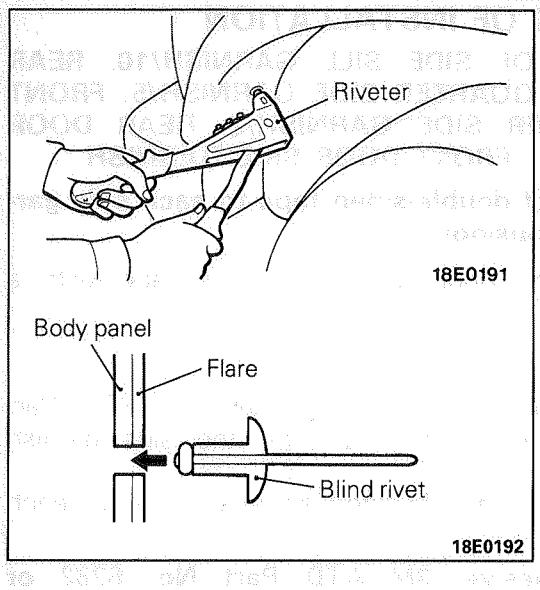

9./5. INSTALLATION OF BLIND RIVETS

Use a riveter to connect the blind rivet.

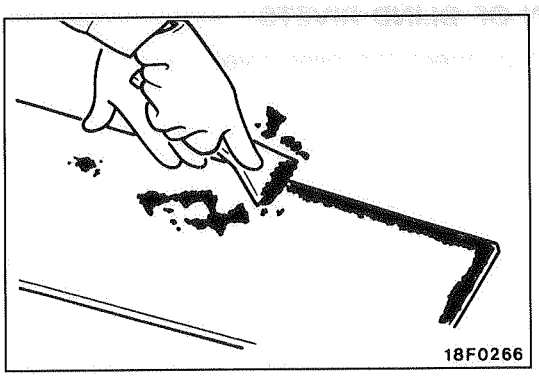

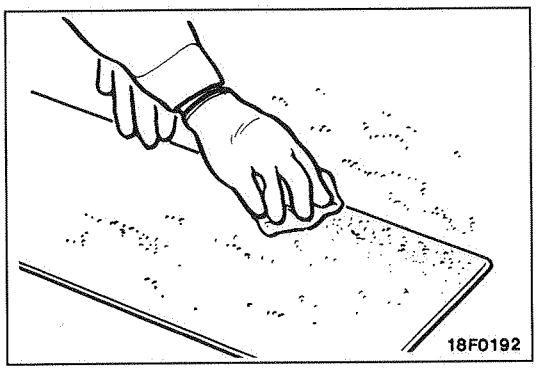

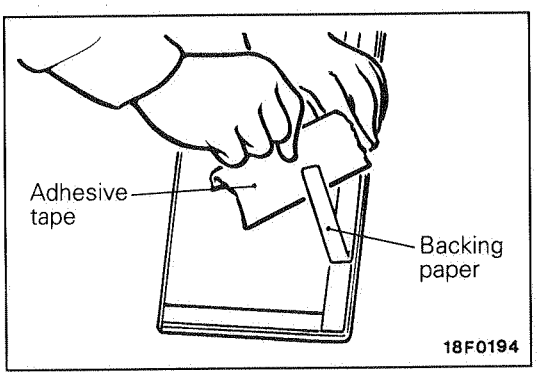

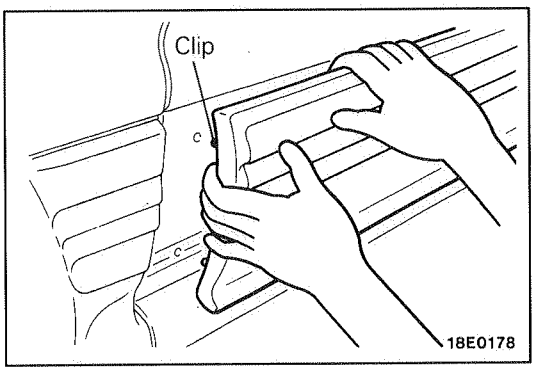

SERVICE POINTS OF INSTALLATION

12. INSTALLATION OF SIDE SILL GARNISH/10. REAR FLARE/8. REAR QUARTER SIDE GARNISH/5. FRONT FLARE/4. FENDER SIDE GARNISH/2. REAR DOOR SIDE GARNISH/1. FRONT DOOR SIDE GARNISH

- **Attachment of double-sided tape to each side garnish (when reusing)**

(1) Scrape off the double-sided adhesive tape with a resin spatula or gasket scraper.

(2) Use cloth moistened with degreaser (3M ATD Part No. 8906 or equivalent) to wipe the side garnish clean.

(3) Attach specified double-sided adhesive tape to each side garnish.

Specified adhesive: 3M ATD Part No. 6382 or equivalent

(4) Heat the adhesive surface of the both-side tape on the side garnish to about 40–60°C (104–140°F).

- **Installation of each side garnish**

(1) Tear off the double-sided tape backing paper.

NOTE
If you attach part of the adhesive tape to the edge of the backing paper, it will be easy to tear off.

(2) Install the side garnish so that the clips match the body holes.

NOTE
If the double-sided adhesive tape is difficult to affix during winter, etc., warm the bonding surfaces of the body and the side garnishes to approx. 40–60°C (104–140°F) before affixing the tape.

(3) Firmly press in the side garnish.

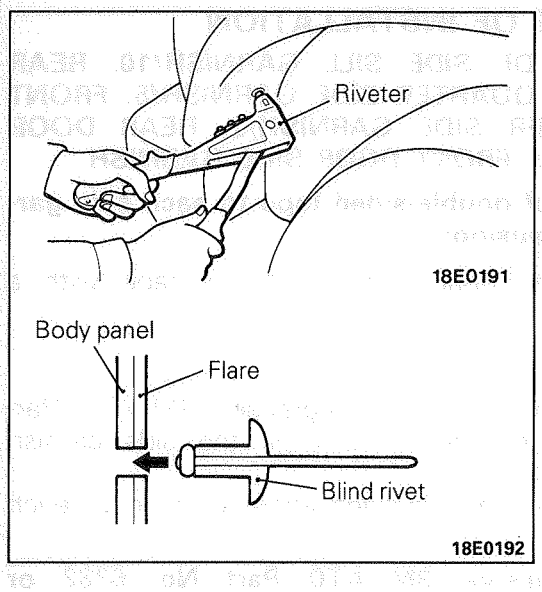

9./5. INSTALLATION OF BLIND RIVETS

Use a riveter to connect the blind rivet.

WINDSHIELD WIPER AND WASHER

M51KJAS

REMOVAL AND INSTALLATION

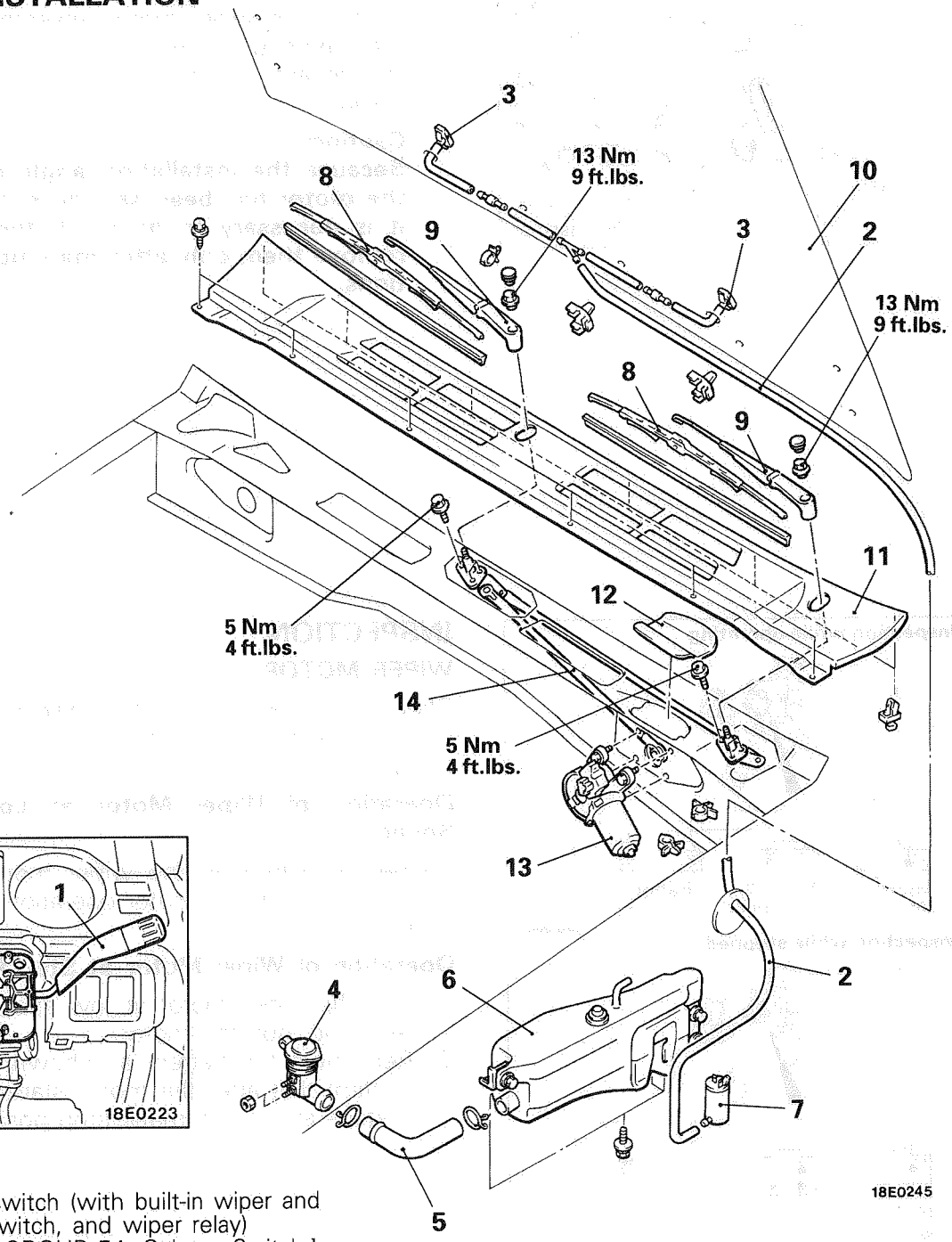

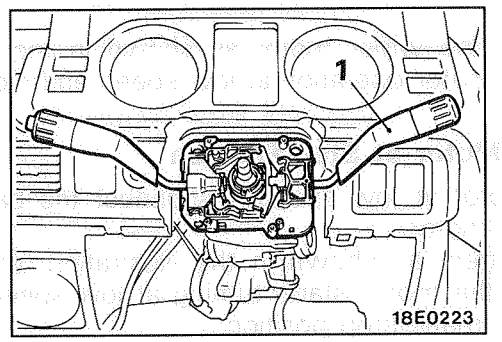

1. Column switch (with built-in wiper and washer switch, and wiper relay) [Refer to GROUP 54–Column Switch.]
2. Washer tube
3. Washer nozzle

◆◆ 8. Wiper blade
◆◆ 9. Wiper arm
◆◆ 13. Wiper motor

Removal of washer tank

- Splash shield (Refer to GROUP 42–Fender.)
- Draining of washer fluid

2. Washer tube
4. Cap
5. Hose
6. Washer tank assembly
7. Washer motor

Removal steps of linkage

◆◆ 9. Wiper arm
10. Hood
11. Front deck garnish
12. Hole cover
◆◆ 13. Wiper motor
14. Linkage

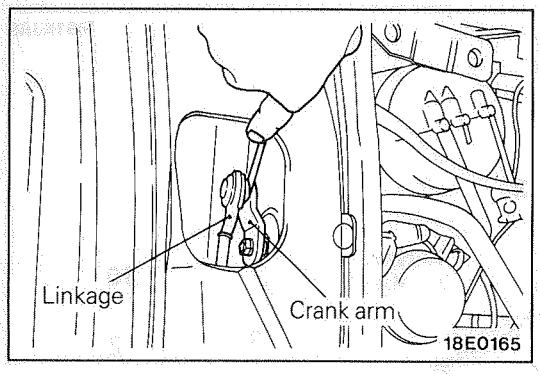

SERVICE POINTS OF REMOVAL

13. REMOVAL OF WIPER MOTOR

Loosen the wiper motor assembly mounting bolts, and then remove the wiper motor assembly. Disconnect the linkage and the motor assembly, and then remove the linkage.

Caution

Because the installation angle of the crank arm and the motor has been set, do not remove them unless it is necessary to do so. If they must be removed, remove them only after marking their mounting positions.

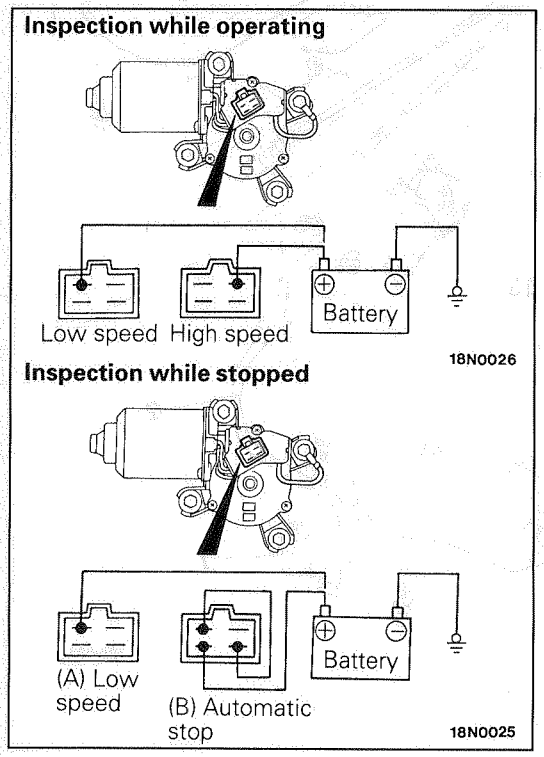

INSPECTION

WIPER MOTOR

Check the wiper motor after disconnecting the wiring harness connector, and with the wiper motor remaining installed to the body.

Operation of Wiper Motor at Low Speed and High Speed

Connect a battery to the wiper motor as shown in the illustration and inspect motor operation at low speed and high speed.

Operation of Wiper Motor at Stop Position

(1) Run the wiper motor at low speed, disconnect the battery, and stop the motor.
(2) Reconnect the battery as shown in the illustration, and confirm that after the motor starts turning at low speed, it stops at the automatic stop position.

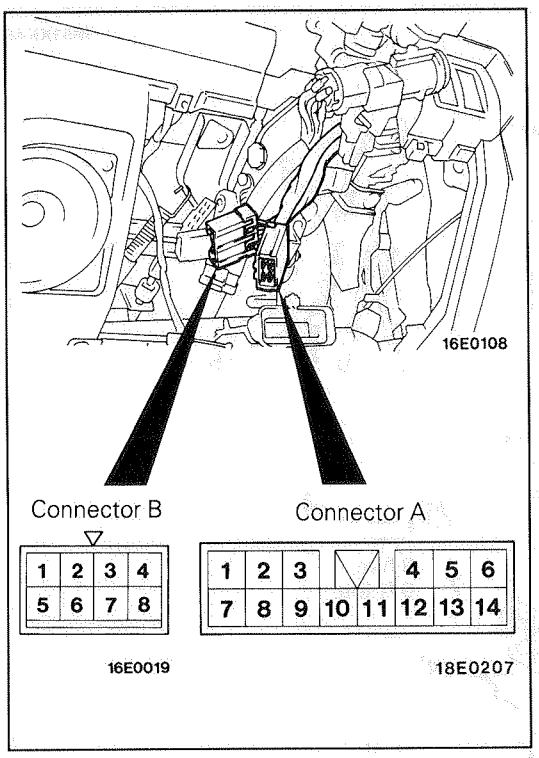

COLUMN SWITCH

Wiper and Washer Switch

Disconnect the column switch connector and check the continuity between the terminals for each switch.

Switch position	Connector / Terminal	A	B			
		5	3	4	7	8
Wiper switch	OFF		○		○	
	1 (LO)		○			○
	2 (HI)			○		○
Washer switch	ON	○				○

NOTE
○—○ indicates that there is continuity between the terminals.

Intermittent Wiper Relay (Intermittent Operation Inspection)

(1) Connect the column switch connector.
(2) Turn the ignition switch to ACC.
(3) Inspect the intermittent operation time when the wiper switch is turned to INT.
Vehicles without variable intermittent control
approx. 3–6 seconds
Vehicles with variable intermittent control
FAST Approx. 3 seconds
SLOW Approx. 12 seconds

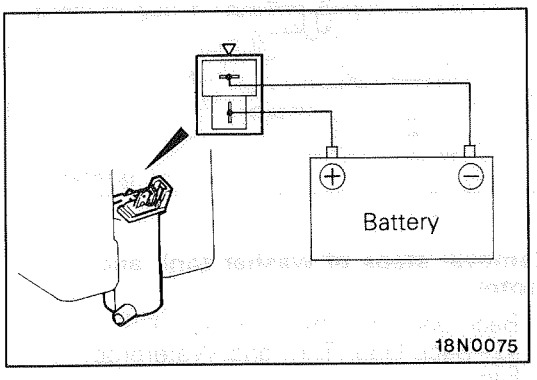

WASHER MOTOR

(1) With the washer motor installed to the washer tank, fill the washer tank with water.
(2) When the battery is connected as shown in the figure, check that the water squirts out strongly.

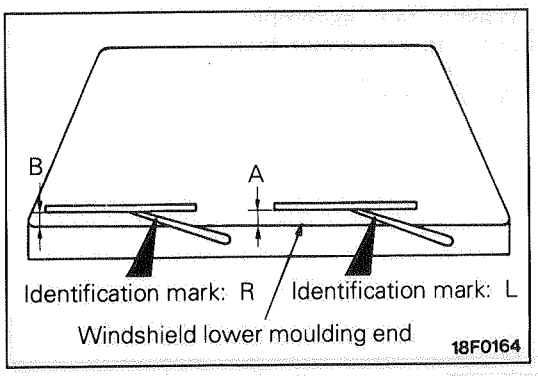

SERVICE POINTS OF INSTALLATION

9. INSTALLATION OF WIPER ARM/8. WIPER BLADE

(1) The movements of the left and right wiper arms are different, so check the identification marks.
(2) Install the wiper blade in the specified position (standard value) as shown in the illustration.

Standard value (A): 25–35 mm (.98–1.38 in.)
(B): 35–45 mm (1.38–1.77 in.)

REAR WIPER AND WASHER

M51KKAP

REMOVAL AND INSTALLATION

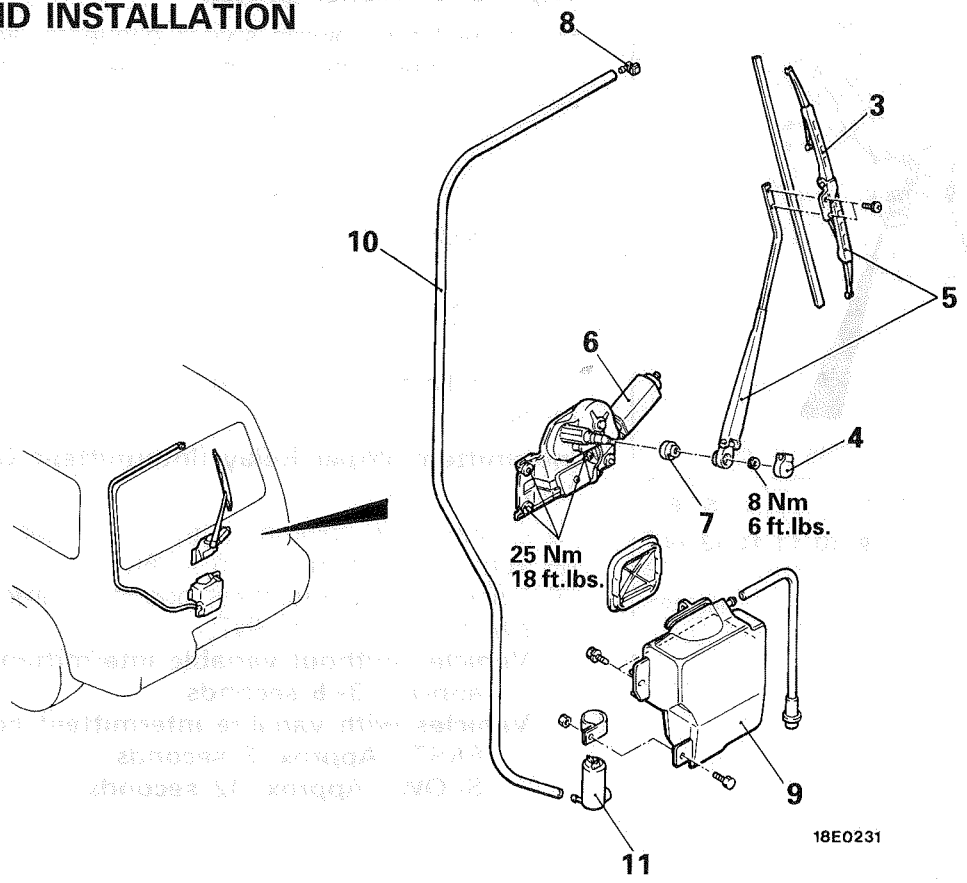

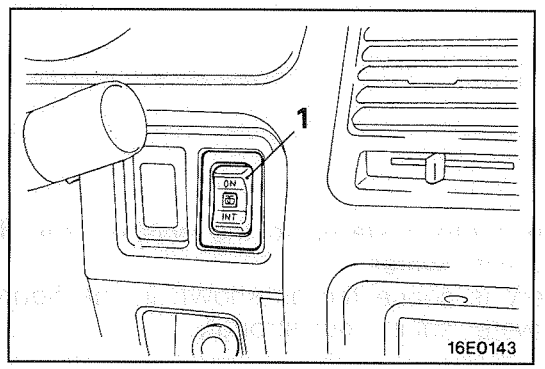

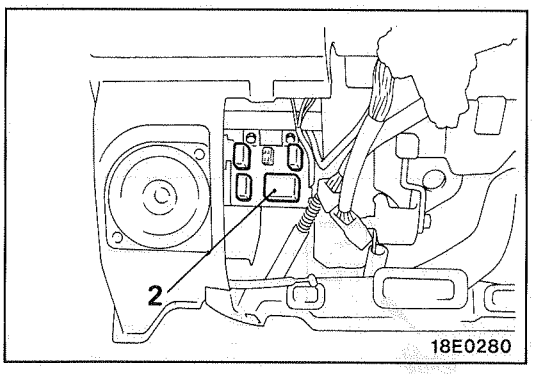

1. Rear wiper and washer switch
3. Wiper blade
8. Washer nozzle

Removal steps of rear intermittent wiper relay

- Instrument under cover (Refer to GROUP 52–Instrument Panel.)

2. Rear intermittent wiper relay

Removal steps of wiper motor

4. Cover
5. Wiper arm and blade assembly
   - Back door trim (Refer to GROUP 42–Back Door Trim and Waterproof Film.)
6. Wiper motor and bracket assembly
7. Grommet

Removal steps of washer tank and motor

- Back door trim (Refer to GROUP 42–Back Door Trim and Waterproof Film.)

9. Washer tank assembly
   - Draining of washer fluid
10. Washer tube
11. Washer motor

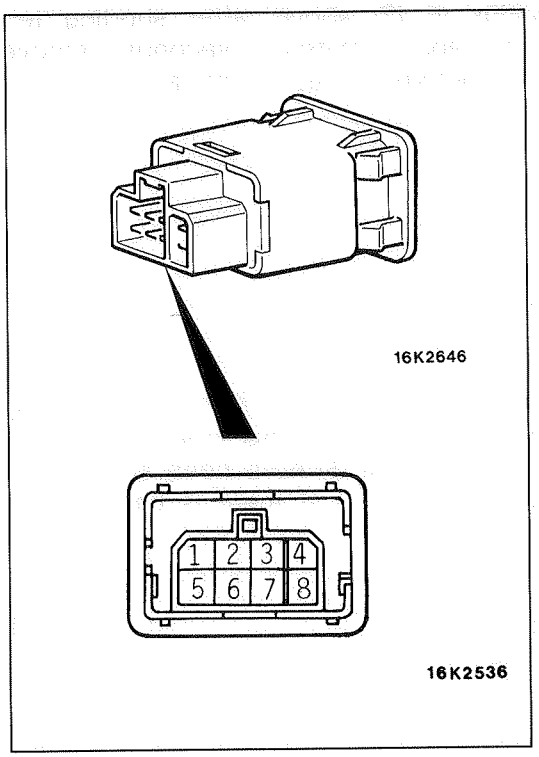

INSPECTION

REAR WIPER AND WASHER SWITCH

Operate the switch, and check the continuity between the terminals.

Switch position		Terminal 1	2	3	4	5	6	7	8
Wiper switch	ON		○					○	
	OFF				○			○	
	INT	○			○		○		
Washer switch	ON		○	○					
	OFF								
Illumination light						○	○		○

16A0252

NOTE
○—○ indicates that there is continuity between the terminals.

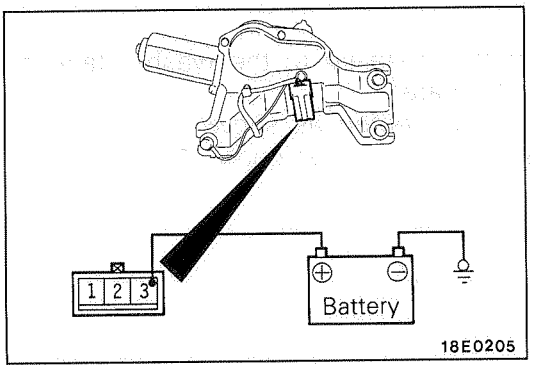

WIPER MOTOR

Check the wiper motor after first disconnecting the wiring harness connector, and with the wiper motor remaining installed to the body.

Operation of Wiper Motor

Connect a battery to the wiper motor as shown in the illustration and inspect the motor operation.

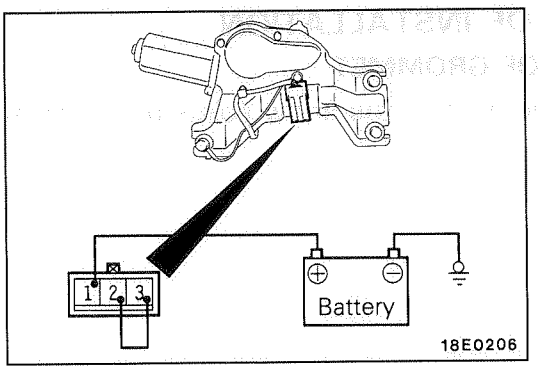

Operation of Wiper Motor at Stop Position

(1) Run the wiper motor, disconnect the battery, and stop the motor.
(2) Reconnect the battery as shown in the illustration, and confirm that after the motor starts turning, it stops at the automatic stop position.

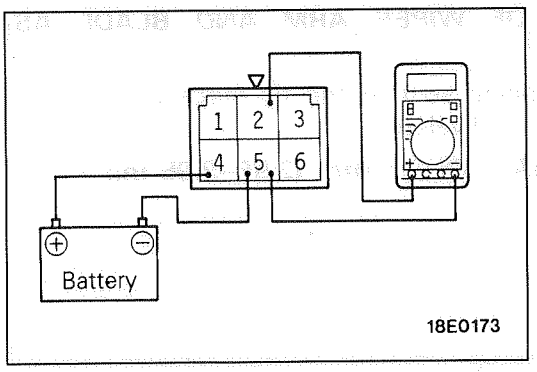

REAR INTERMITTENT WIPER RELAY

(1) Connect the ⊕ terminal of the voltmeter to terminal ②, and the ⊖ terminal to terminal ⑤.
(2) Check that battery voltage shows when the battery ⊕ terminal is connected to terminal ④ and the battery ⊖ terminal is connected to terminal ⑤.

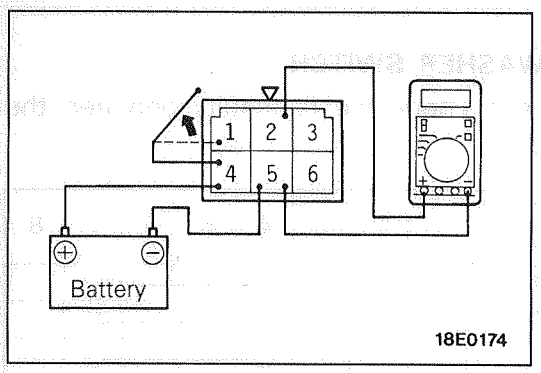

(3) Under the conditions in (2) above, after shorting terminals ① and ④ for approximately 2 seconds, remove the short connection between these terminals.

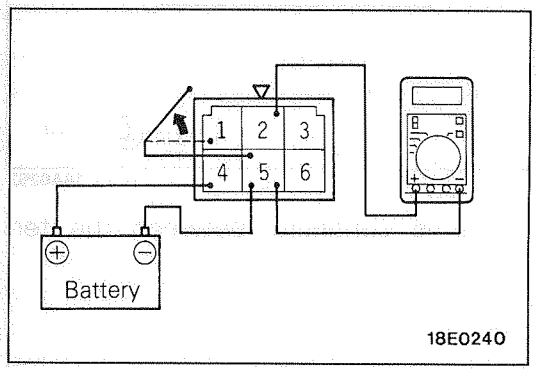

(4) Next, short terminal ① and terminal ⑤. Check that the voltage shown on the voltmeter at this time is 0 V.
(5) After terminal ① and terminal ⑤ have been shorted for approximately 8 seconds, check if there is battery voltage at terminal ②.

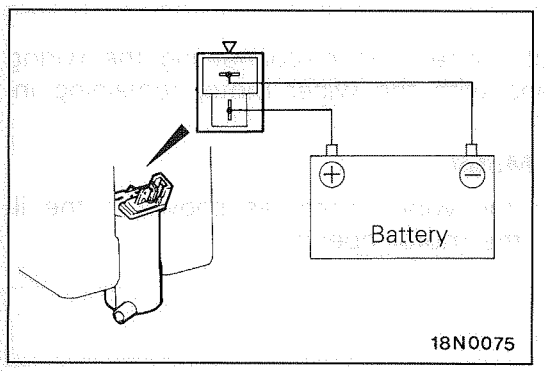

WASHER MOTOR

(1) With the washer motor installed to the washer tank, fill the washer tank with water.
(2) When the battery is connected as shown in the figure, check that the water squirts out strongly.

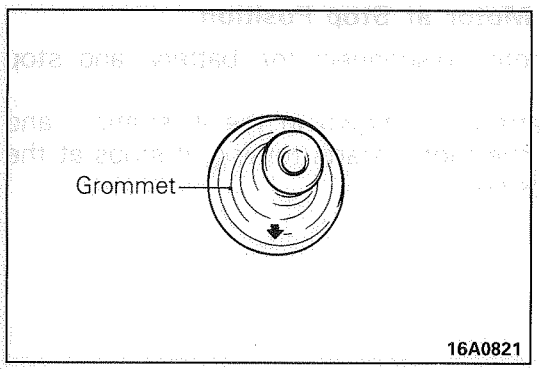

SERVICE POINT OF INSTALLATION

7. INSTALLATION OF GROMMET

Install the grommet so that the arrow points downwards.

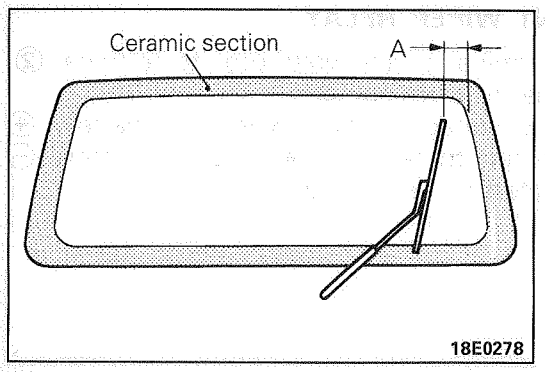

5. INSTALLATION OF WIPER ARM AND BLADE ASSEMBLY

Install the wiper blade so that the tip stops at the standard position (standard value).

Standard value (A): 65–75 mm (2.56–2.95 in.)

HEADLIGHT WASHER

M51KPAC

REMOVAL AND INSTALLATION

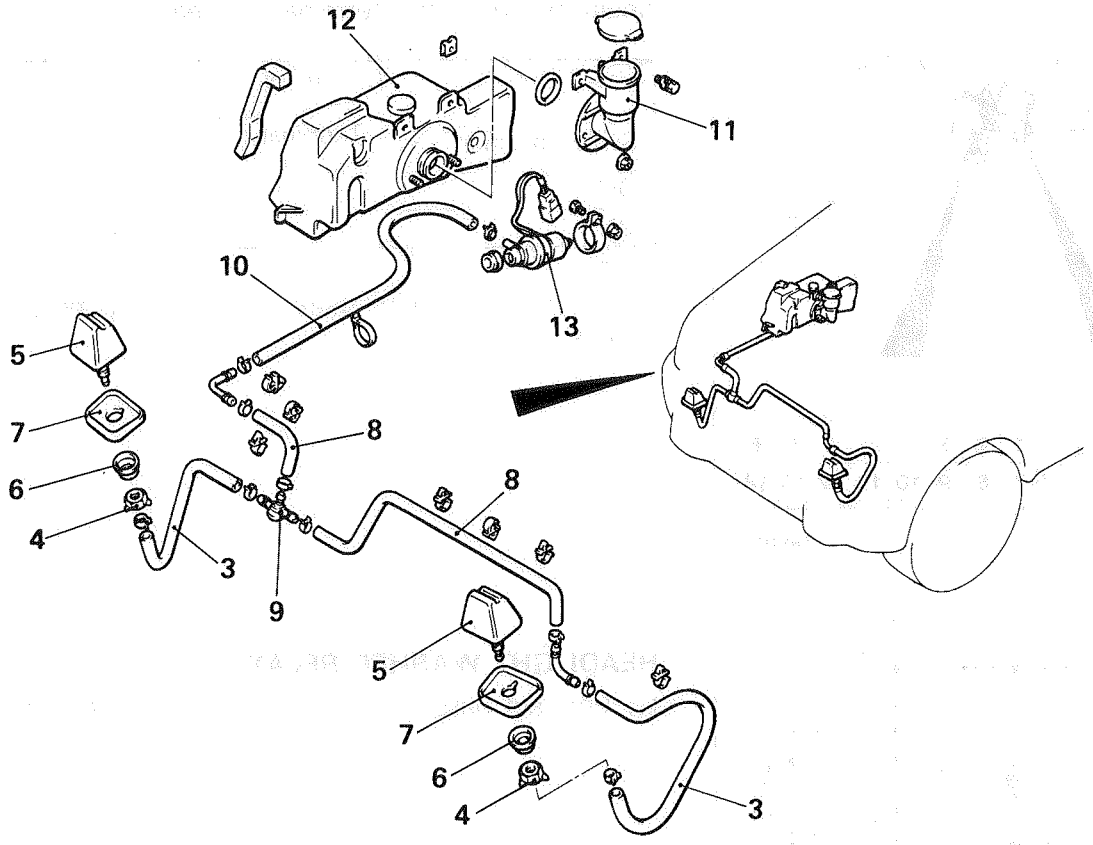

18E0279

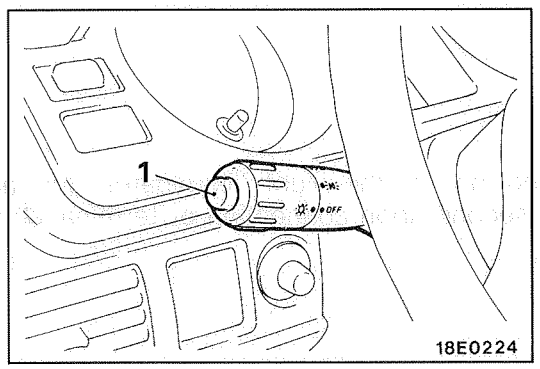

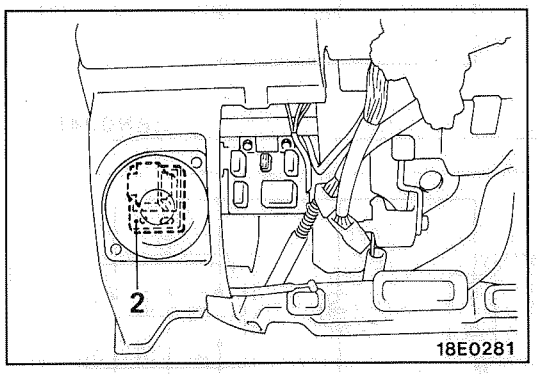

Removal steps of headlight washer switch

1. Headlight washer switch
   (Refer to GROUP 54–Column Switch.)

Removal steps of nozzle and check valve

- Front bumper (Refer to P.51–11.)
- Draining of washer fluid

3. Washer hose
4. Nut
5. Nozzle
6. Collar
7. Nozzle base
8. Washer hose
9. Check valve

Removal steps of headlight washer relay

- Instrument under cover
  (Refer to GROUP 52–Instrument Panel.)

2. Headlight washer relay

Removal steps of washer tank

- Splash shield [RH]
  (Refer to GROUP 42–Fender.)
- Front combination light
  (Refer to GROUP 54–Lighting System.)
- Draining of washer fluid

10. Washer hose
11. Cap
12. Washer tank assembly
13. Washer motor

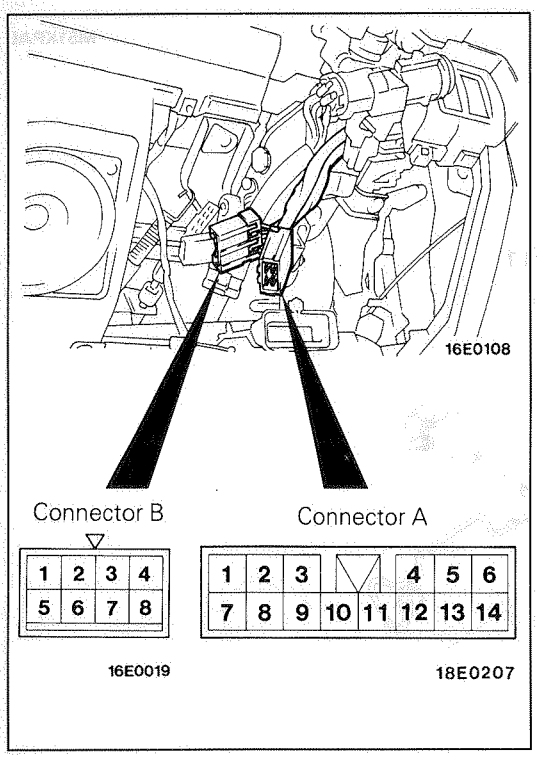

INSPECTION

HEADLIGHT WASHER SWITCH

Disconnect the column switch connector and check the continuity between the terminals for each switch.

Switch position \ Terminal / Connector	A	B
	4	6
OFF		
ON	○——	——○

NOTE
○—○ indicates that there is continuity between the terminals.

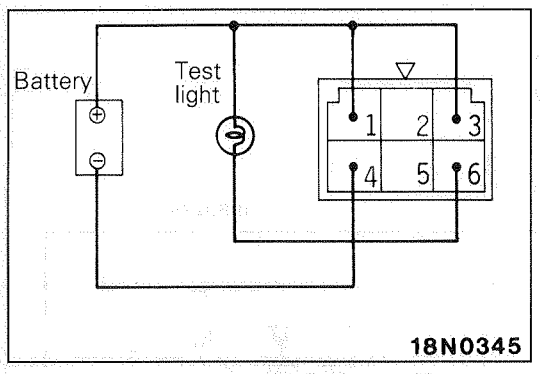

HEADLIGHT WASHER RELAY

(1) Connect battery and test light to the relay as illustrated.

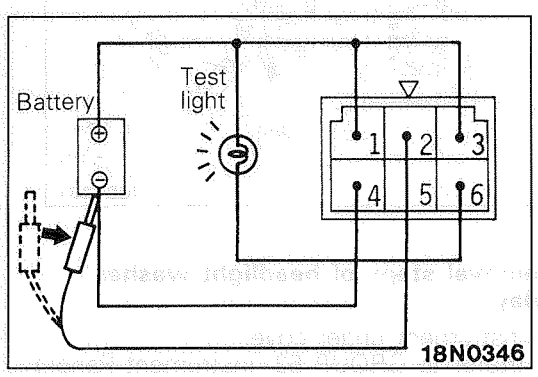

(2) The relay is normal if the light illuminates for approximately 0.3 second upon connection of terminal ② to battery (–).

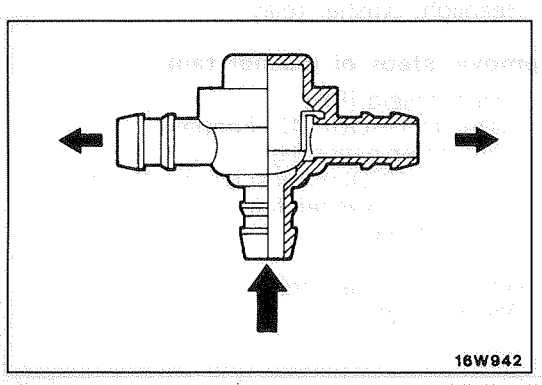

CHECK VALVE

Apply pressure to the inlet of the check valve to check its opening pressure.

Opening pressure: 50–110 kPa (7.1–15.6 psi)

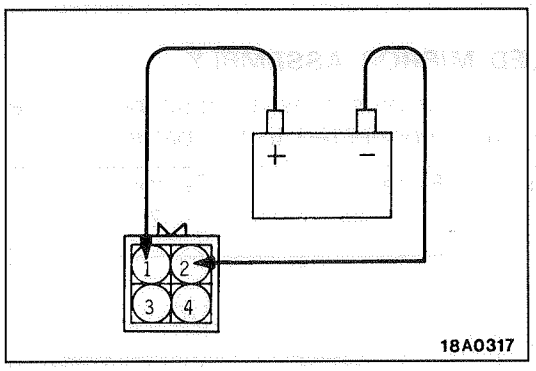

HEADLIGHT WASHER MOTOR

(1) With the washer motor installed to the washer tank, fill the washer tank with water.
(2) Connect battery (+) and (–) cables to terminals ② and ① respectively to see that the washer motor runs and water is injected.

DOOR MIRROR

M51QAAT

REMOVAL AND INSTALLATION

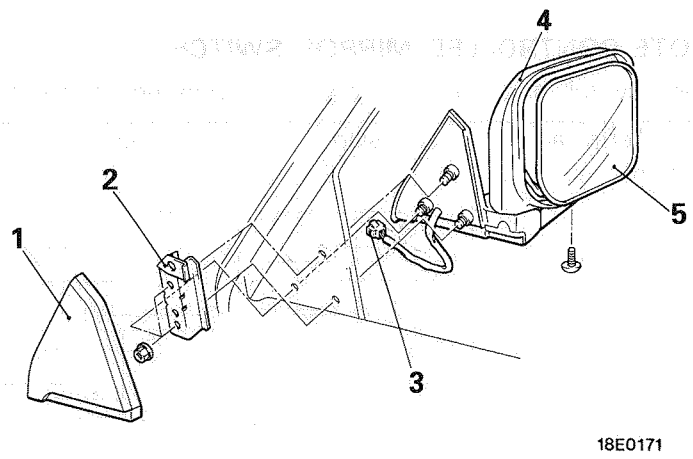

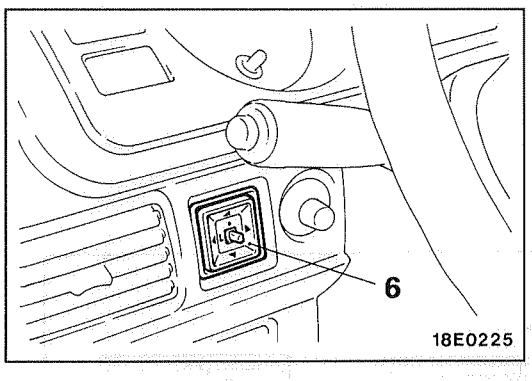

Door mirror removal steps

1. Delta cover inner
2. Inner cover bracket
3. Harness connector
4. Door mirror
5. Mirror

Remote controlled mirror switch removal

6. Remote controlled mirror switch

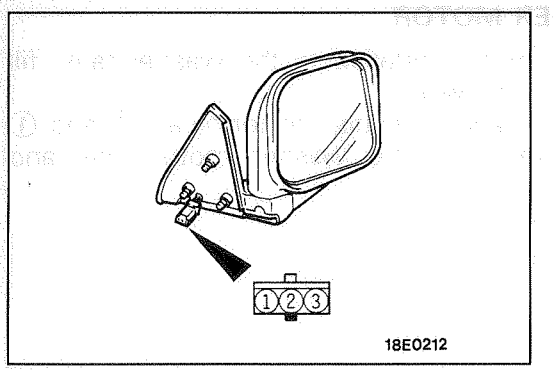

INSPECTION

REMOTE CONTROLLED MIRROR ASSEMBLY

Check to be sure that the mirror moves as described in the table when each terminal is connected to the battery.

Direction of operation \ Connection	Battery ⊕	Battery ⊖	Terminal 1	Terminal 2	Terminal 3
Up	○	○	○		○
Down	○	○	○		○
Left	○	○	○	○	
Right	○	○	○	○	

NOTE
○—○ indicates each terminal is connected to the battery.

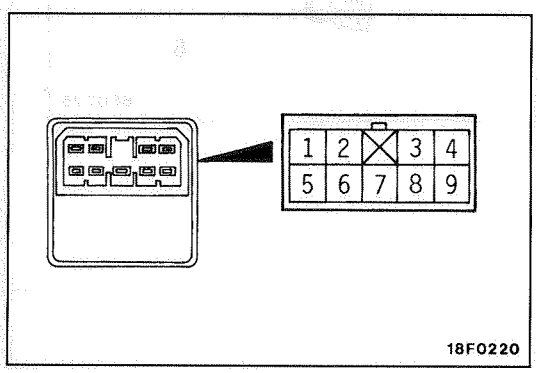

REMOTE CONTROLLED MIRROR SWITCH

Operate switch and check for continuity between terminals.

Direction \ Terminal	Left side 3	4	6	7	8	Right side 2	4	6	7	9
UP		○			○	○	○			
			○	○				○	○	
DOWN		○		○			○		○	
			○		○	○		○		
LEFT		○		○			○		○	
	○		○					○		○
RIGHT	○	○					○			○
			○	○				○	○	

NOTE
○—○ indicates that there is continuity between the terminals.

INTERIOR

CONTENTS

M52AA--

FLOOR CONSOLE 6
FRONT SEAT 12
FRONT SEAT BELT 16
HEADLINING 11
INSTRUMENT PANEL 2
REAR SEAT BELT 18
REAR SEATS 15
SPECIFICATIONS 2
Generel Specifications 2
TRIMS 8

SPECIFICATIONS

GENERAL SPECIFICATIONS

M52CA--

Items		Specifications
Suspension seat		
Suspension mechanism		Coil spring type with shock absorber
Up-and-down movement stroke	mm (in.)	50 (2.0)
Body weight adjustment	kg (lbs.)	60–100 (132–220)
Seat height adjustment		3 steps

INSTRUMENT PANEL

M52VAAV

For installation of the instrument panel, the bolts and screws described below are used. They are indicated by symbols in the illustration.

Name	Symbol	Size mm (in.) (D×L)	Color	Shape
Tapping screw	A	5×12 (.20×.47)	–	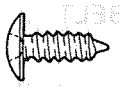
	B	5×16 (.20×.62)	–	
	C	5×16 (.20×.62)	Black	
	D	5×20 (.20×.79)	Black	
	E	5×20 (.20×.79)	Black	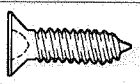
	F	4×10 (.16×.39)	Black	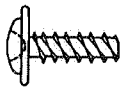
	G	5×12 (.20×.47)	–	
	H	5×16 (.20×.62)	–	
	I	5×20 (.20×.79)	–	
	J	5×25 (.20×.98)	–	
Washer assembled screw	K	5×12 (.20×.47)	–	
	L	5×20 (.20×.79)	Black	
Washer assembled bolt	M	8×20 (.31×.79)	–	
Machine screw	N	4×12 (.16×.47)	Black	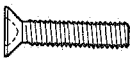
Cap installed screw	O	5×16 (.20×.62)	–	
Nut	P	6 (.24)	–	 19N0001

D = Thread diameter
L = Effective thread length

REMOVAL AND INSTALLATION

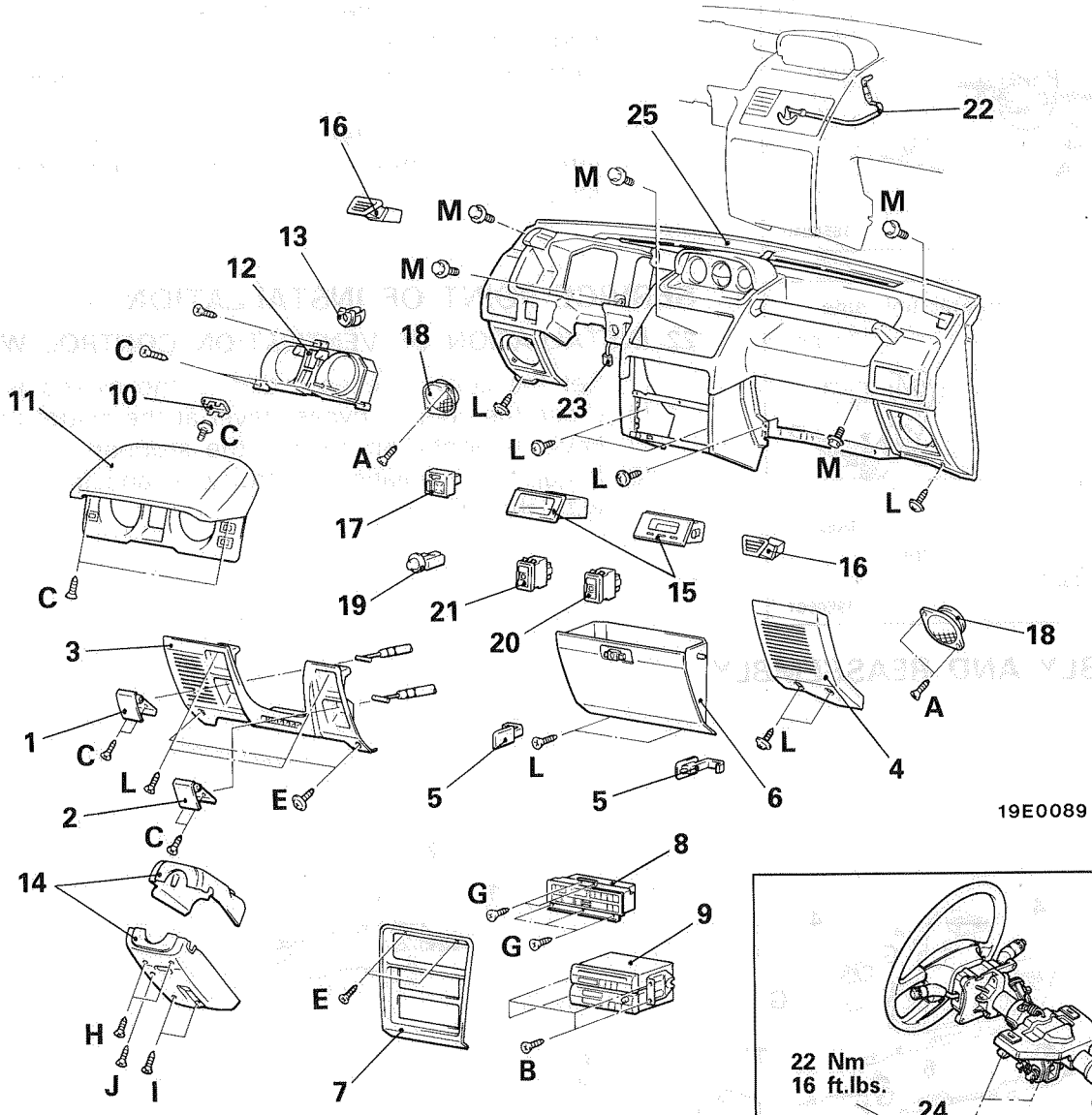

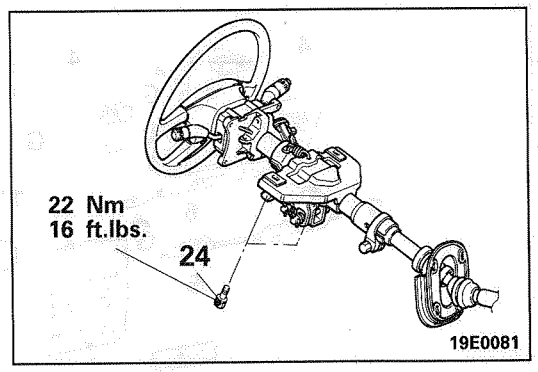

Pre-removal and Post-installation Operation
- Removal and Installation of Floor Console Assembly (Refer to P.52-6.)

Removal steps

1. Hood lock release handle
2. Fuel filler door lock release handle
3. Instrument under cover
4. Instrument corner cover
5. Glove box stopper
6. Glove box assembly
7. Center panel A
8. Heater control assembly
9. Radio and tape player
10. Meter hood plug
11. Meter bezel assembly
12. Combination meter
13. Speedometer cable adapter
14. Column cover
15. Clock or clock plug
16. Side defroster garnish
17. Door mirror control switch
18. Front speaker
19. Rheostat
20. Rear wiper and washer switch
21. Door lock switch
22. Ventilation control wire
23. Harness connector
24. Steering column installation bolts
25. Instrument panel assembly

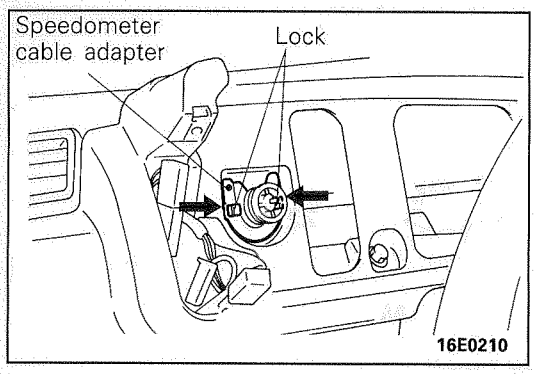

SERVICE POINT OF REMOVAL

13. REMOVAL OF SPEEDOMETER CABLE ADAPTER

(1) Disconnect the speedometer cable at the transmission end of the cable.
(2) Remove the lock of the sppedometer cable adapter from the instrument panel.
(3) Pull the speedometer cable slightly toward the vehicle interior, and then remove the sppedometer cable adapter.

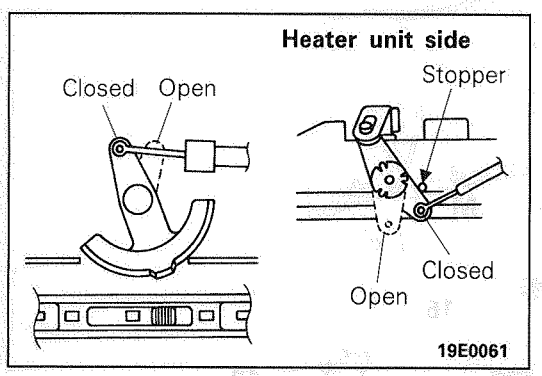

SERVICE POINT OF INSTALLATION

22. INSTALLATION OF VENTILATION CONTROL WIRE

(1) Set the cool air bypass dial to the closed position.
(2) Close the cool air bypass lever at the heater unit side (lever is lightly hit against the stopper).
(3) Install the ventilation control wire and fix it securely with the clip.

DISASSEMBLY AND REASSEMBLY

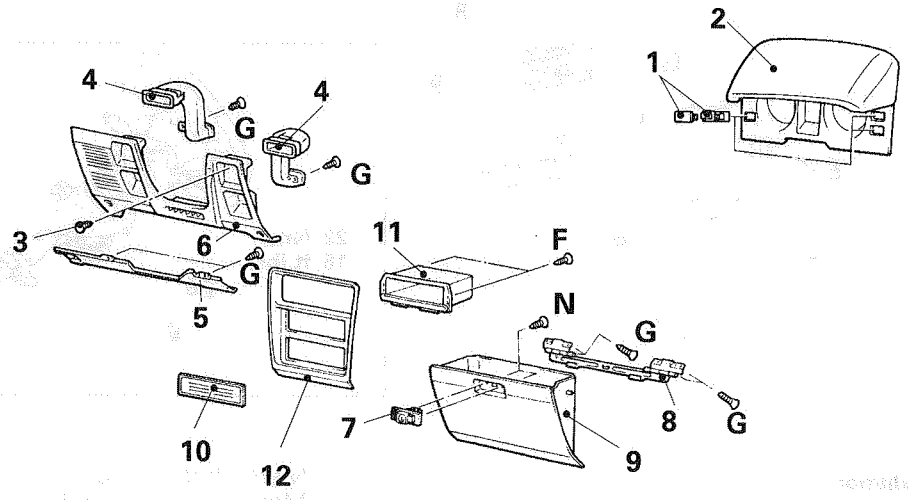

Meter bezel assembly disassembly steps

1. Switch or plug
2. Meter bezel

Instrument under cover disassembly steps

3. Plug
4. Lap heater duct
5. Instrument under cover frame
6. Instrument under cover

Glove box assembly disassembly steps

7. Glove box lock
8. Glove box hinge
9. Glove box

Centre panel A disassembly steps

10. Radio plug
11. Box
12. Centre panel A

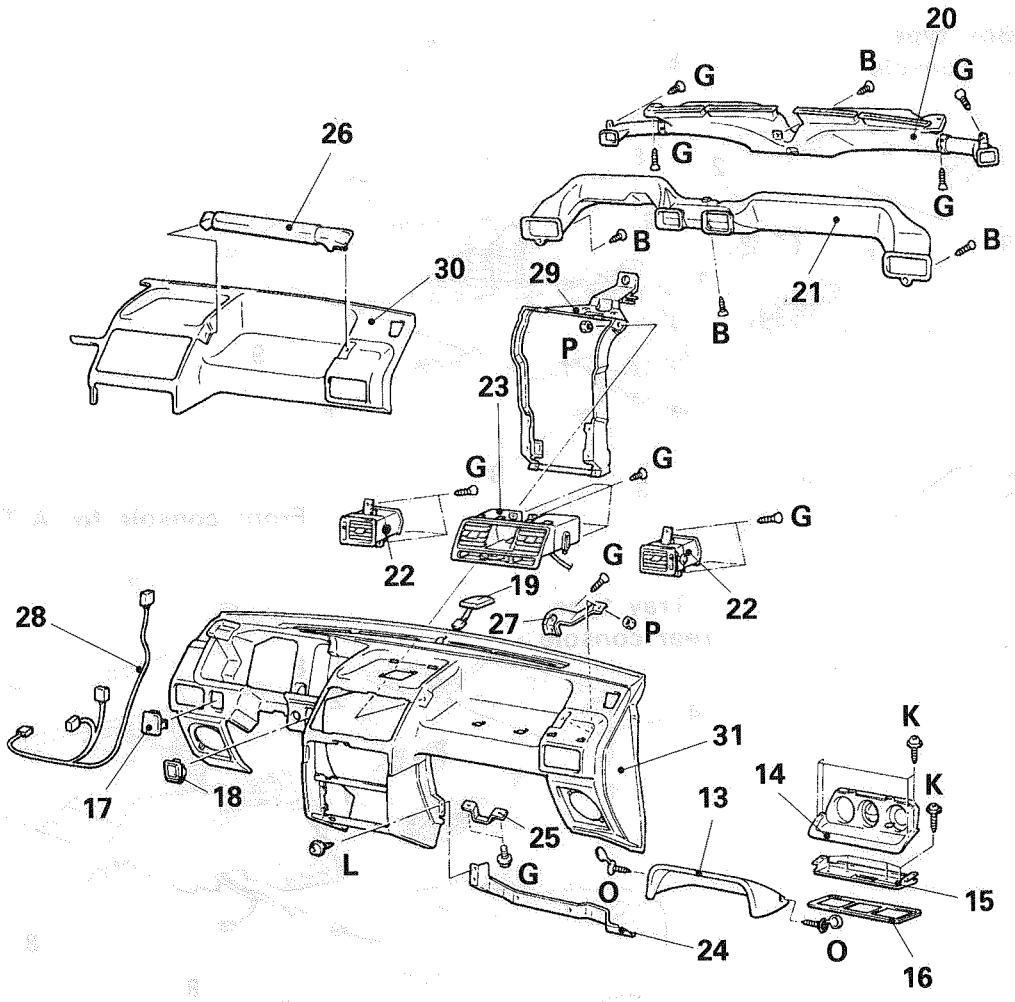

19E0059

Instrument panel assembly disassembly steps

13. Meter hood
14. Multi meter
15. Meter bracket
16. Instrument panel mat <Vehicles without multi meter>
17. Plug
18. Hole cover
19. Geomagnetic sensor
20. Side defroster duct and defroster nozzle assembly
21. Distribution duct
22. Side air outlet
23. Center air outlet
24. Glove box frame
25. Glove box striker
26. Assist grip
27. Assist grip bracket
28. Instrument panel wiring harness
29. Instrument panel reinforcement
30. Instrument panel pad
31. Instrument panel

FLOOR CONSOLE

REMOVAL AND INSTALLATION

M52UBAU

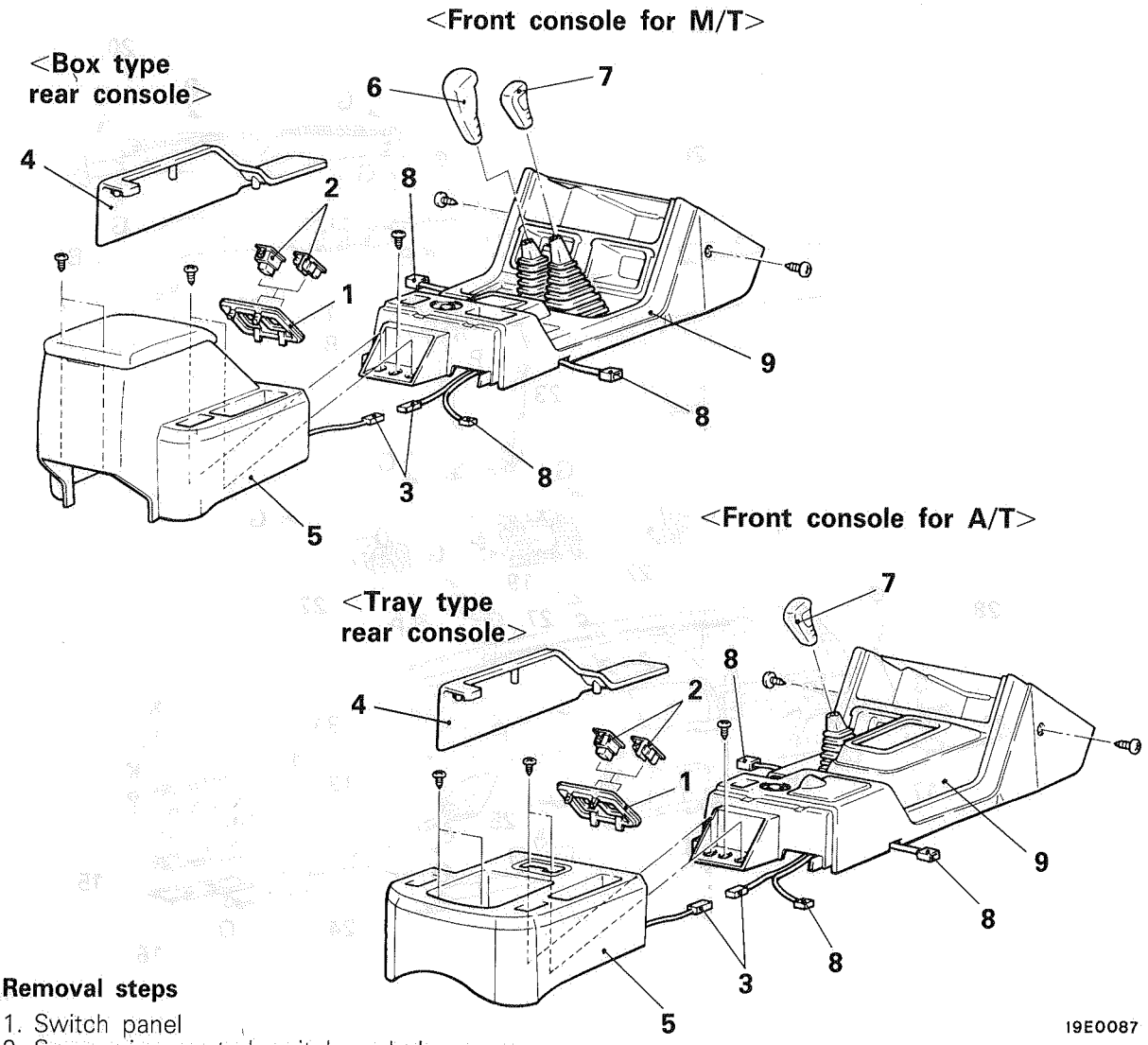

Removal steps

1. Switch panel
2. Suspension control switch or hole cover
3. Rear console harness connector
4. Side panel A
5. Rear console assembly
6. M/T shift lever knob
7. Transfer shift lever knob
8. Floor console harness connector
9. Front console assembly

◀■▶

SERVICE POINT OF REMOVAL

9. REMOVAL OF FRONT CONSOLE ASSEMBLY

When removing the A/T front console assembly, set the A/T selector lever to "L".

DISASSEMBLY AND REASSEMBLY

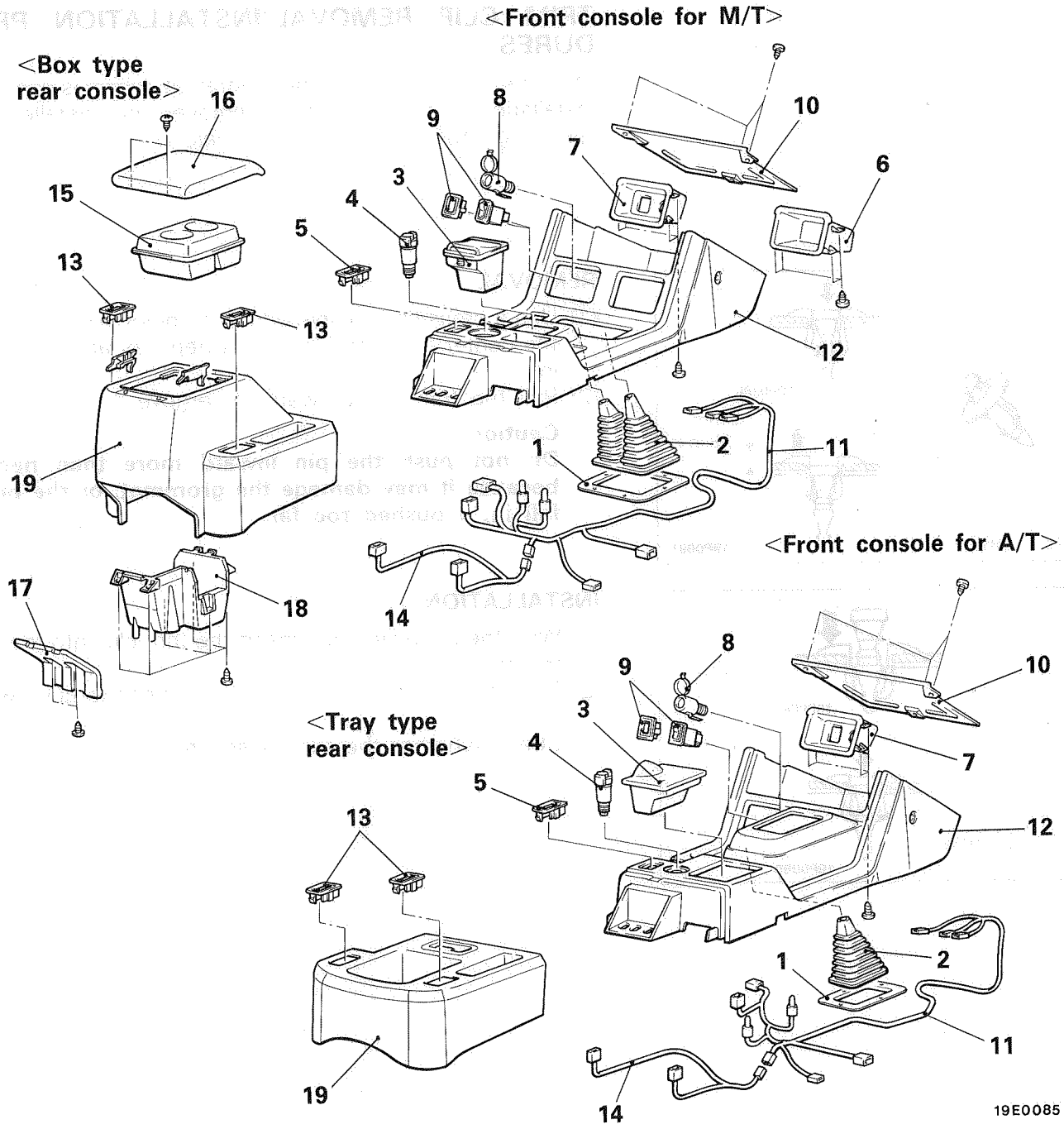

Front console assembly disassembly steps

1. Boot reinforcement
2. Boot
3. Ashtray
4. Cigarette lighter
5. Hole cover
6. Box
7. Plate
8. Accessory socket
9. Rear differential lock switch or hole cover
10. Front console cover
11. Floor console wiring harness
12. Front console

Rear console assembly disassembly steps

13. Hole cover
14. Rear console wiring harness
15. Cup holder
16. Lid assembly
17. Rear console cover
18. Box
19. Rear console

TRIMS

M52UCBL

TRIM CLIP REMOVAL/INSTALLATION PROCEDURES

The type of clip shown in the illustration, which is used for the installation of trim, should be removed and installed by the following procedures described below.

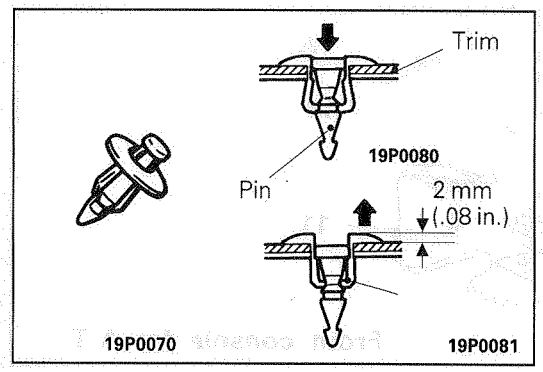

REMOVAL

(1) Use a cross-tip (+) screwdriver to push inward the pin (at the center of the trim clip) to a depth of about 2 mm (.08 in.).
(2) Pull the trim clip outward to remove it.

Caution
Do not push the pin inward more than necessary because it may damage the grommet, or the pin may fall in, if pushed too far.

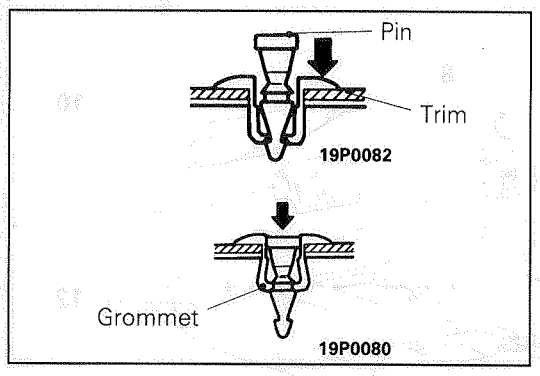

INSTALLATION

(1) With the pin pulled out, insert the trim clip into the hole in the trim.
(2) Push the pin inward until the pin's head is flush with the grommet.
(3) Check whether the trim is secure.

REMOVAL AND INSTALLATION

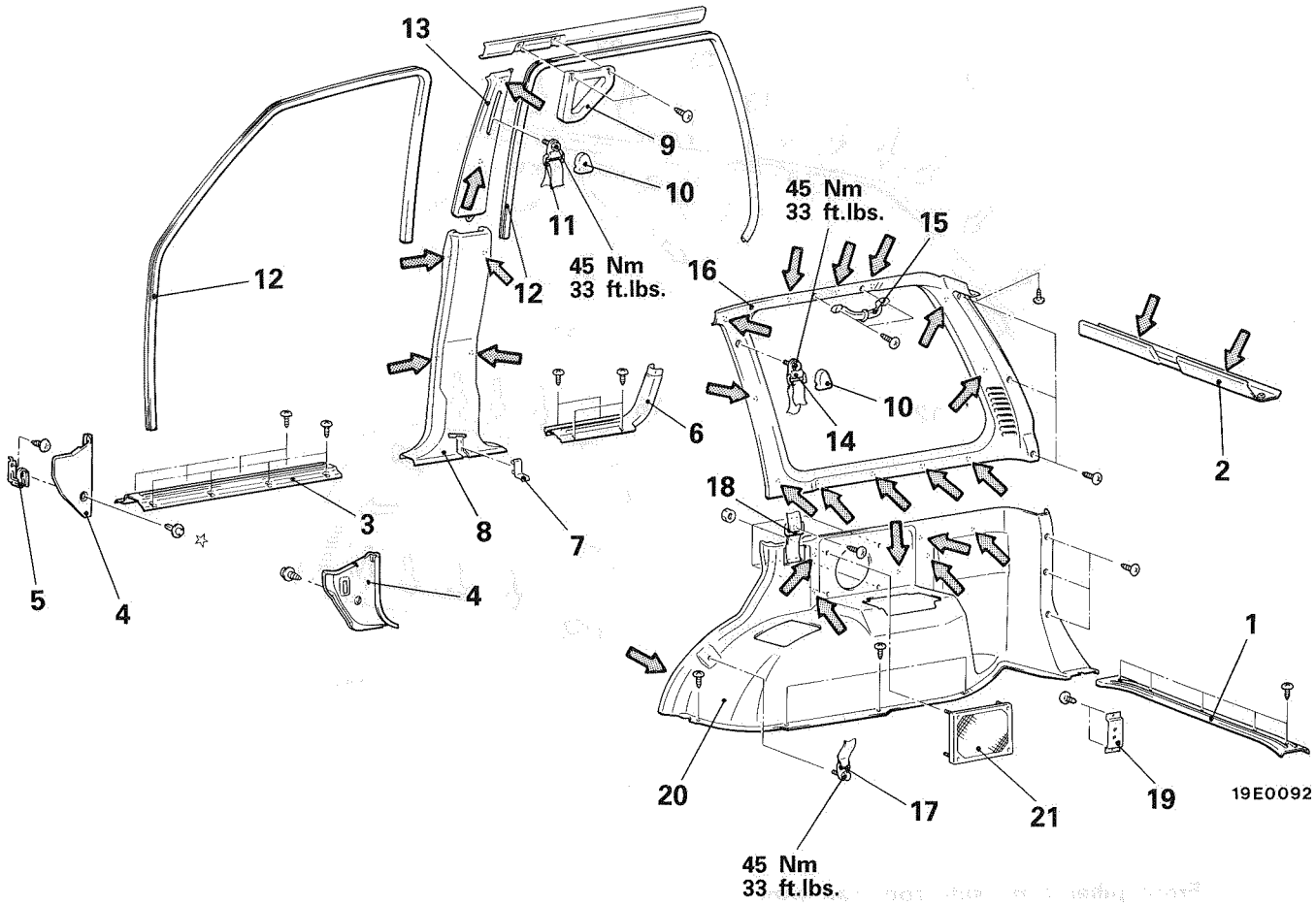

1. Rear trimmming plate
2. Rear roof rail trim

Cowl side trim removal steps

3. Front scuff plate
4. Cowl side trim
5. Cowl side bracket <RH side only>

Center pillar trim removal steps

3. Front scuff plate
6. Rear scuff plate
7. Belt anchor cover
8. Center pillar trim lower
9. Grip
10. Sash guide cover
11. Front seat belt sash guide
12. Door inner opening weatherstrip
13. Center pillar trim upper

Quarter trim removal steps

2. Rear roof rail trim
10. Sash guide cover
14. Rear seat belt sash guide
15. Assist grip
16. Quarter trim upper
1. Rear trimming plate
17. Rear seat belt anchor plate
18. Rear seat belt garnish
19. Cargo lamp bracket <LH side>
20. Quarter trim lower
21. Speaker garnish

NOTE
(1) ⇦ : Clip position
(2) ☆ : Refer to trim clip removal/installation procedures (P.52-8.)

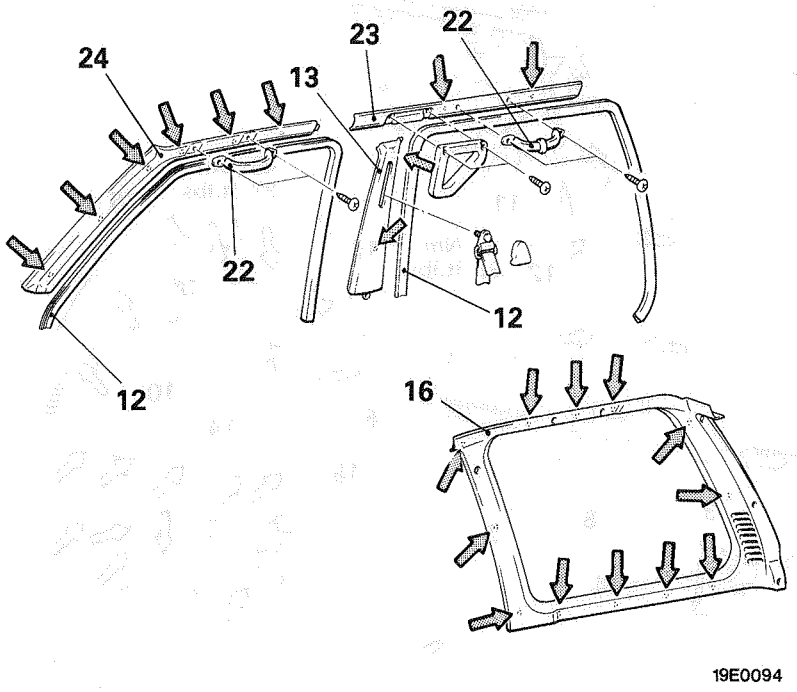

19E0094

Front pillar trim, side roof rail trim removal steps

12. Door inner opening weatherstrip
13. Center pillar trim upper
16. Quarter trim upper
22. Assist grip
23. Side roof rail trim
24. Front pillar trim

NOTE
⇦ : Clip position

HEADLINING

M52UDBD

REMOVAL AND INSTALLATION

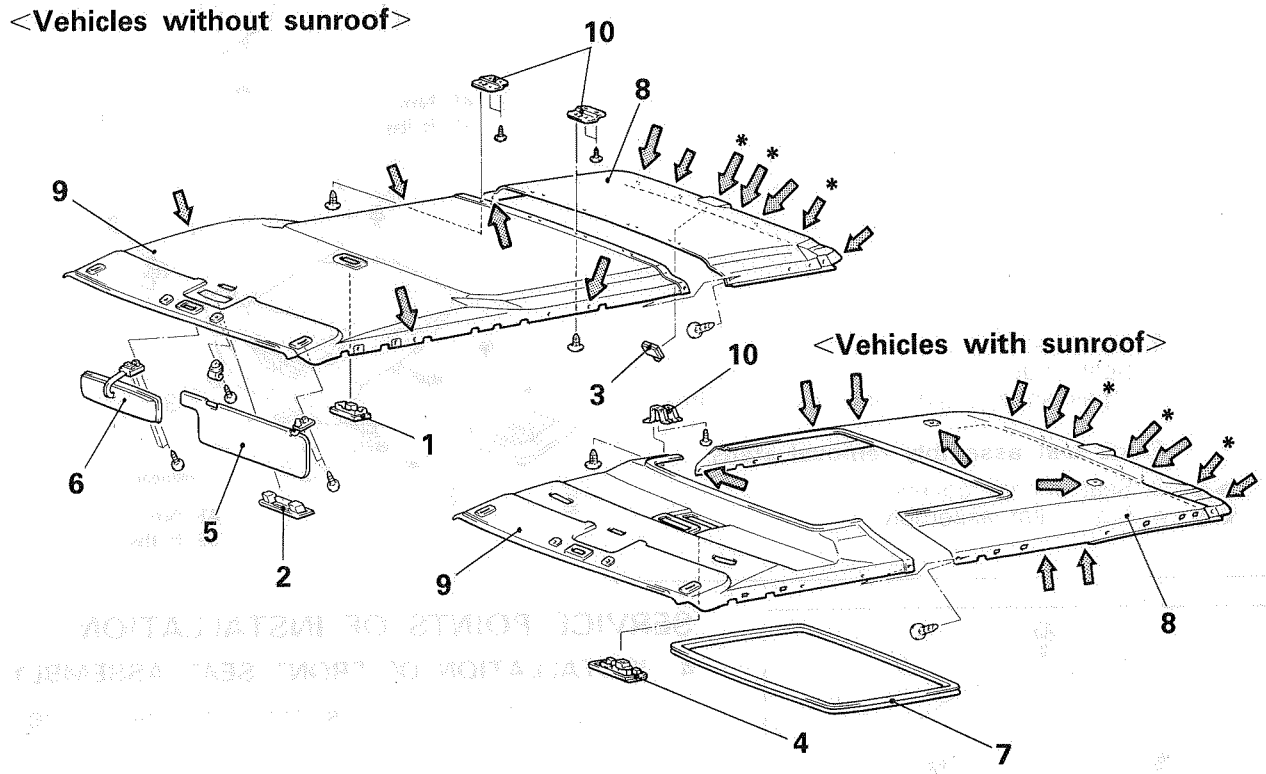

19E0090

Removal steps
<Vehicles without sunroof>

1. Room lamp
2. Map lamp
3. Luggage compartment lamp
5. Sunvisors
6. Inside rear view mirror
   - Rear roof rail trim
   - Quarter trim upper
   - Center pillar trim upper
   - Side roof rail trim
   - Front pillar trim

   (Refer to P.52-9, 10.)
8. Rear headlining
9. Front headlining
10. Joint bracket

Removal steps
<Vehicles with sunroof>

1. Room lamp
2. Map lamp
3. Luggage compartment lamp
4. Sunroof switch
5. Sunvisors
6. Inside rear view mirror
   - Rear roof rail trim
   - Quarter trim upper
   - Center pillar trim upper
   - Side roof rail trim
   - Front pillar trim

   (Refer to P.52-9, 10.)
7. Headlining trim
8. Rear headlining
9. Front headlining
10. Joint bracket

NOTE
(1)⇦ : Clip position
(2) * : Vehicles with partial trim

FRONT SEAT

REMOVAL AND INSTALLATION

M52UEAS

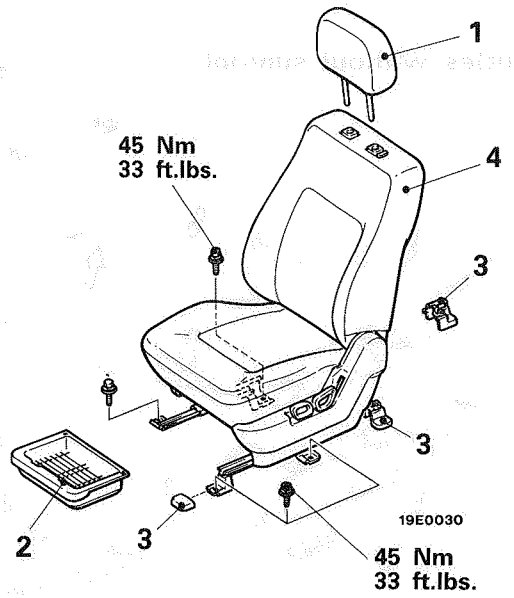

1. Headrestraint
2. Seat under tray
   <passenger's side only, except Van>

Front seat assembly removal steps

◆◆ 3. Seat anchor covers
◆◆ 4. Front seat assembly

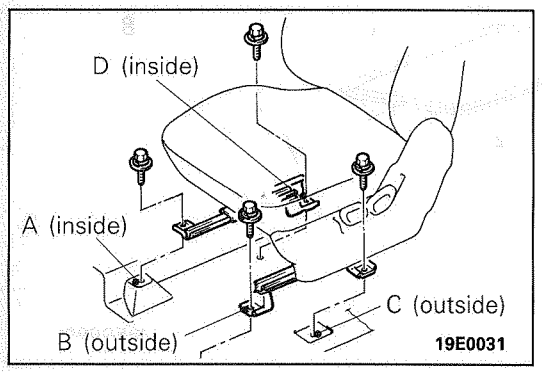

SERVICE POINTS OF INSTALLATION

4. INSTALLATION OF FRONT SEAT ASSEMBLY

(1) Install the lower rail so that it matches the left and right front seat mounting hole positions, and lock both sides of the seat adjustor.
(2) Provisionally tighten the seat mounting bolts in the order A, B, C, and D, and then tighten them to the specified torque.
(3) After installing the front seat assembly, check that the seat moves backward and forwards smoothly, and that the seat adjuster locks on both sides in all lock positions.

NOTE
The illustration shows the driver's side seat.

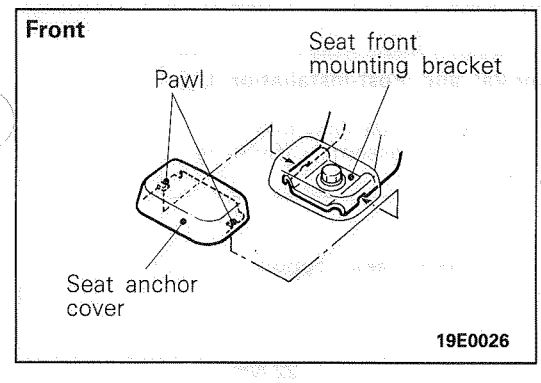

3. INSTALLATION OF SEAT ANCHOR COVER

(1) Press down the front seat anchor cover from the top of the seat front mounting bracket, and hang the anchor cover tab on the bracket.

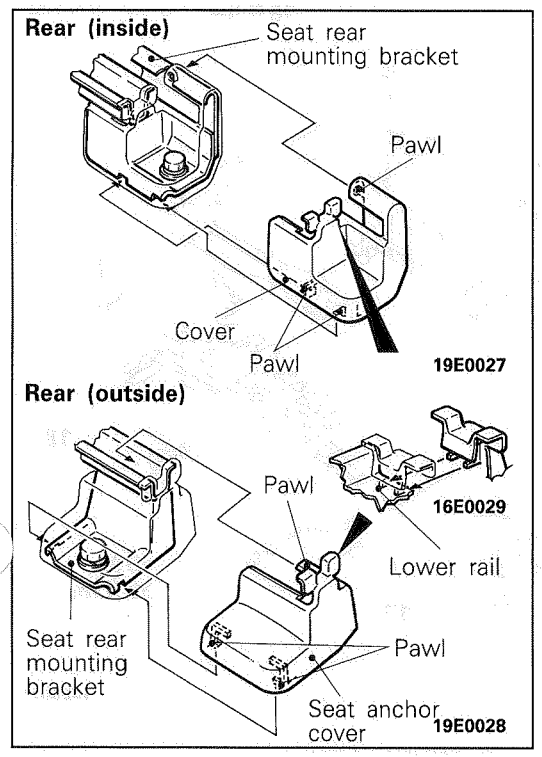

(2) Insert the rear seat anchor cover from the rear of the seat rear mounting bracket, and hang the anchor cover tab on the bracket while inserting into the lower rail.

DISASSEMBLY AND REASSEMBLY

Pre-removal and Post-installation Operation
- Removal and Installation of Front inner seat belt assembly (Refer to P.52-16.)

<Fixed seat type>

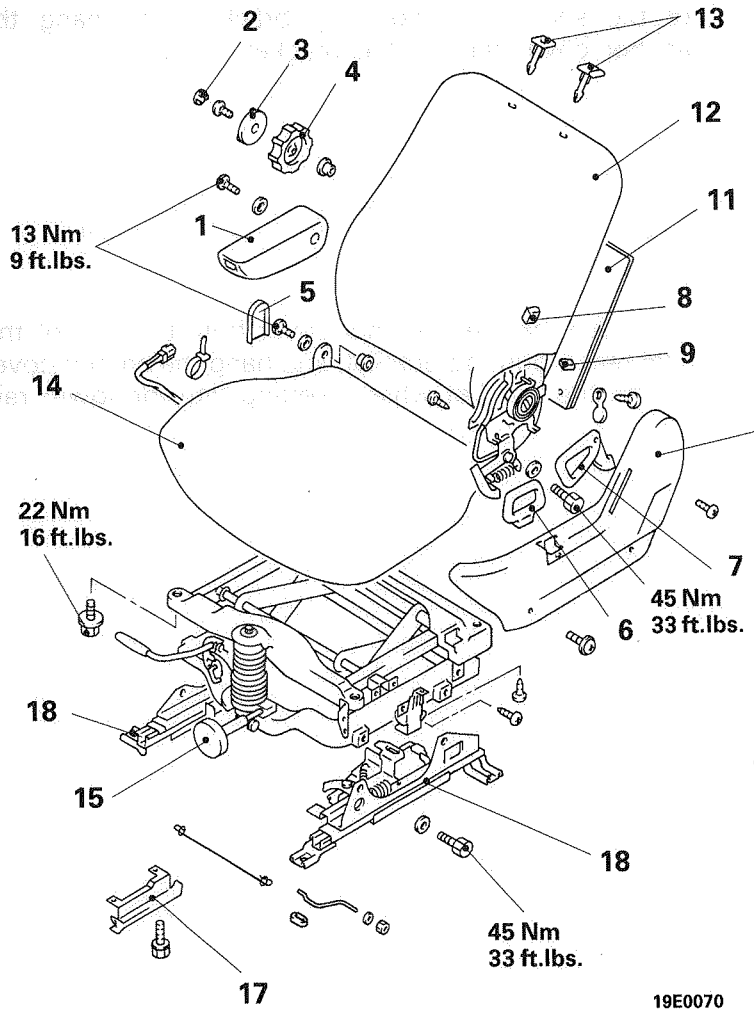

19E0070

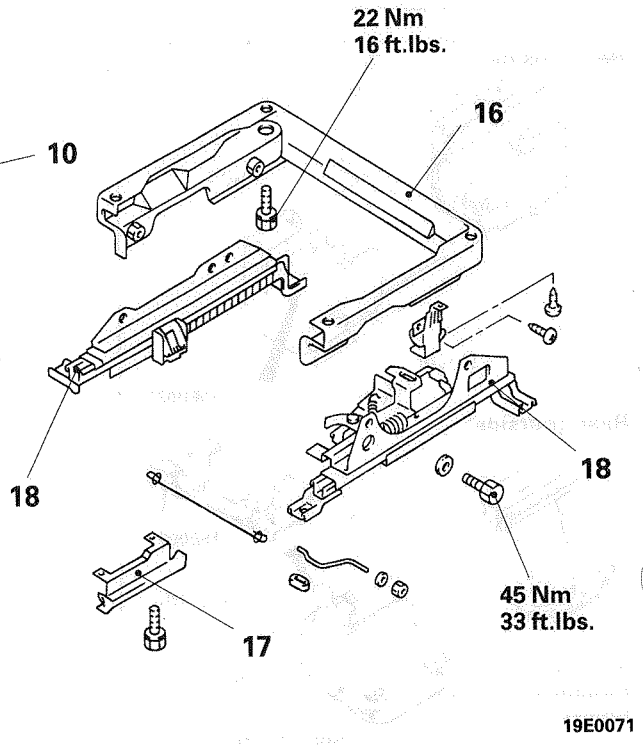

19E0071

Disassembly steps

1. Armrest assmbly
2. Side support lever cap
3. Side support lever
4. Lumbar support lever
5. Free hinge protector
6. ◆◆ Slide knob
7. Reclining knob
8. Reclining memory knob
9. Walk-in knob
10. Shield cover
11. Back pocket assembly
12. Seatback assembly
13. Headrestraint guide
14. Seat cushion assmbly
15. Suspension assembly
16. Leg assembly
17. Under tray bracket
18. Seat adjuster

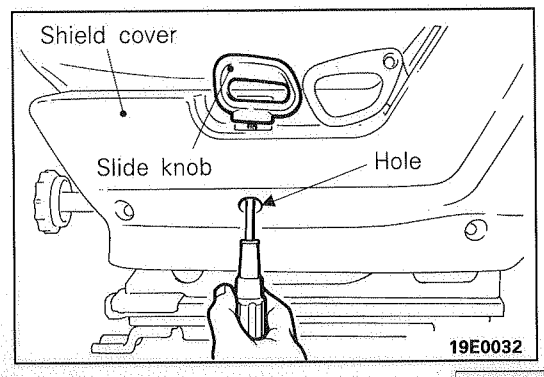

SERVICE POINT OF DISASSEMBLY

6. REMOVAL OF SLIDE KNOB

Pass a screwdriver through the shield cover hole and remove the slide knob mounting screw.

TSB Revision

REAR SEATS

REMOVAL AND INSTALLATION

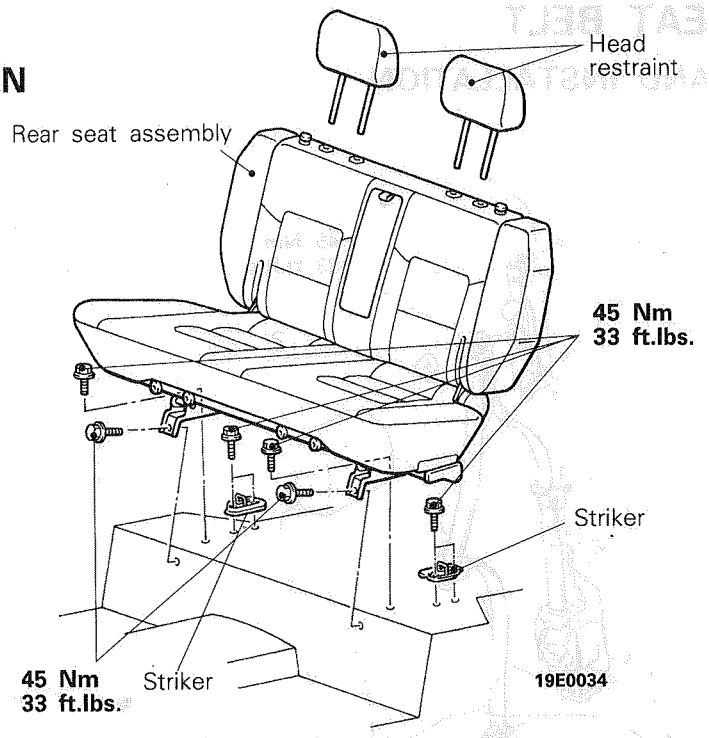

DISASSEMBLY AND REASSEMBLY

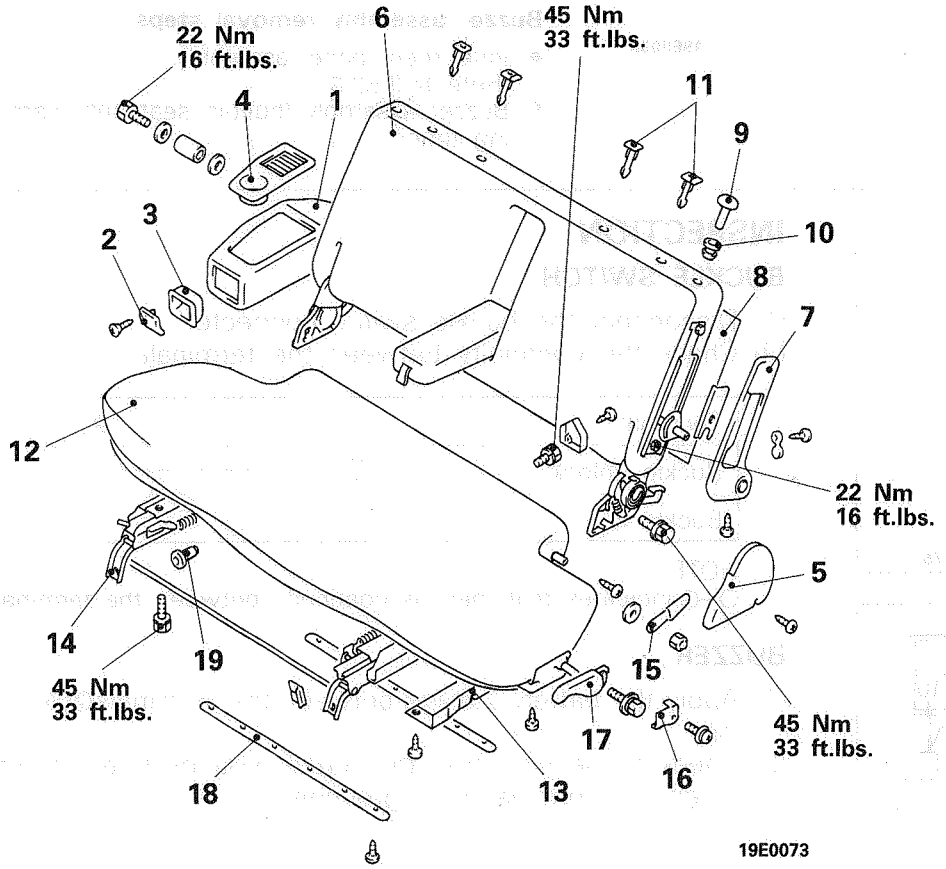

Disassembly steps

1. Side back assembly
2. Seat back knob
3. Seat back garnish
4. Seat back tray
5. Reclining cover
6. Seat back assembly
7. Rail cover
8. Seat back trim
9. Knob
10. Knob guide
11. Head restraint guide
12. Seat cushion assembly
13. Slideleg cover
14. Seat adjuster
15. Full flat knob
16. Cover
17. Knob
18. Cushion trim moulding
19. Head restraint guide

FRONT SEAT BELT

REMOVAL AND INSTALLATION

M52UGBK

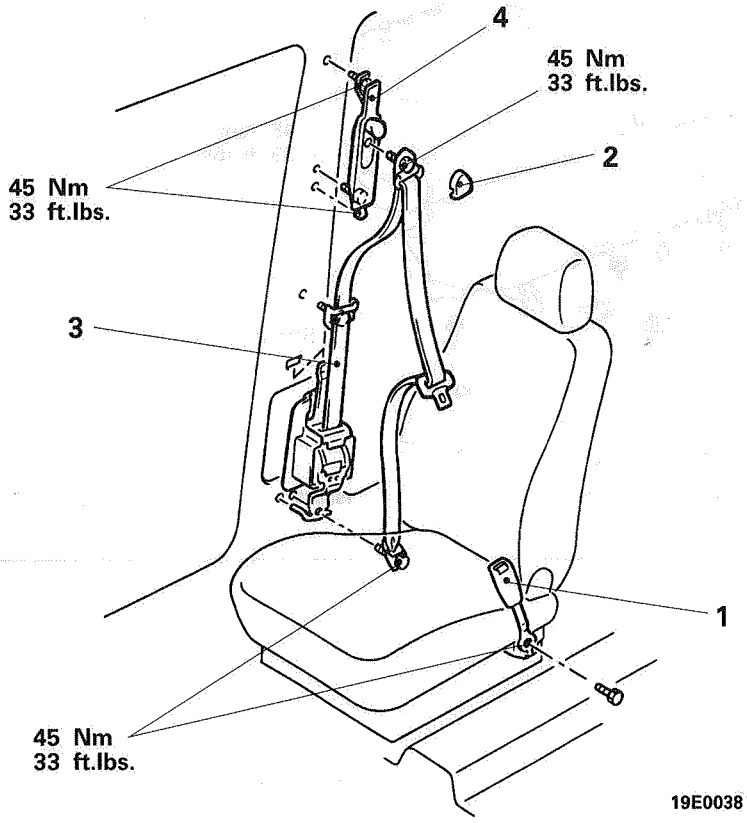

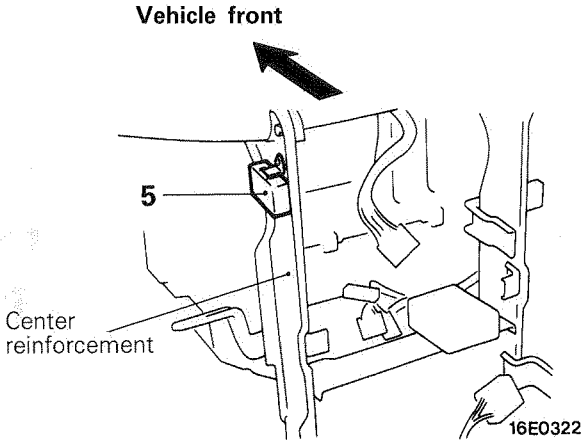

◆◆ 1. Inner seat belt assembly

Removal steps

2. Sash guide cover
   - Center pillar trim, lower } (Refer to
   - Center pillar trim, upper } P.52-9.)
3. ◆◆ Outer seat belt assembly
4. ◆◆ Adjustable seat belt anchor

Buzzer assembly removal steps

- Instrument panel assembly (Refer to P.52-3.)

5. Buzzer assembly (built-in seat belt warning timer

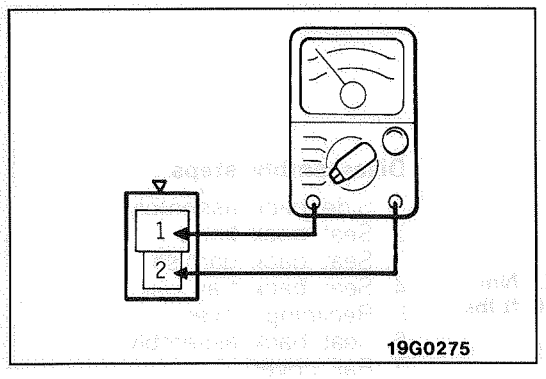

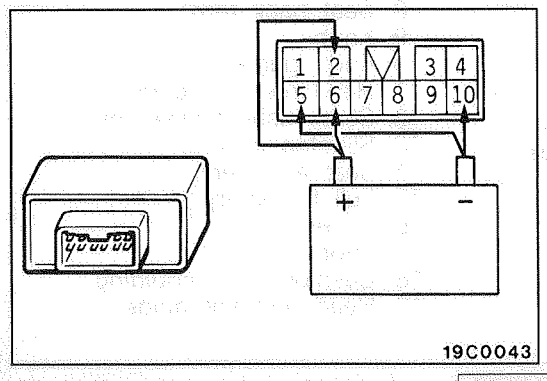

INSPECTION

BUCKLE SWITCH

(1) Disconnect the buckle switch connector.
(2) Check the continuity between the terminals.

Terminal	1	2
Buckle unlock	○	○
Buckle lock		

NOTE
○—○ indicates that there is continuity between the terminals.

BUZZER

(1) Apply the battery voltage between the terminals ②, ⑥ and ⑩.
(2) Check to be sure that the buzzer sounds intermittently when the terminal ⑤ is grounded.

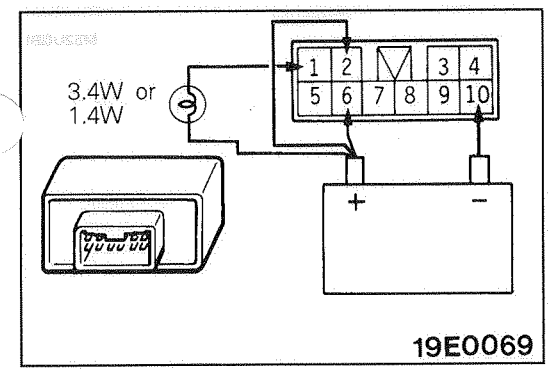

SEAT BELT WARNING TIMER

(1) Apply the battery voltage between the terminal ② and ⑩.
(2) Connect a bulb between the terminal ① and plus terminal of the battery.
(3) Check to be sure that the bulb illuminates for 6 seconds when the terminal ⑥ is connected to plus terminal.

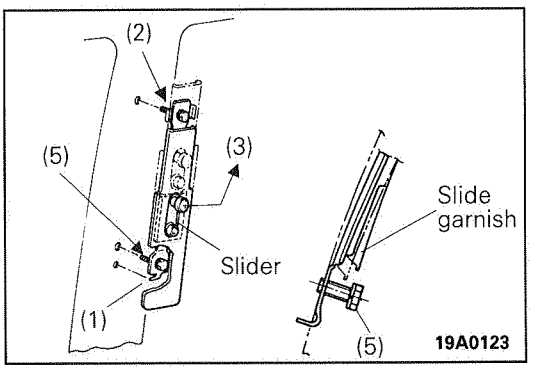

SERVICE POINTS OF INSTALLATION E52MDAP

4. INSTALLATION OF ADJUSTABLE SEAT BELT ANCHOR

(1) Securely fit the tab of the adjustable seat belt anchor into the hole in the center pillar.
(2) Provisionally tighten the installation bolt at the upper side.
(3) Lock the slider at the uppermost position.
(4) Raise the slide garnish to the upper side.
(5) Tighten the lower side mounting bolt to the specified torque.
(6) Lower the slide garnish and slider, and tighten the upper side mounting bolt to the specified torque.

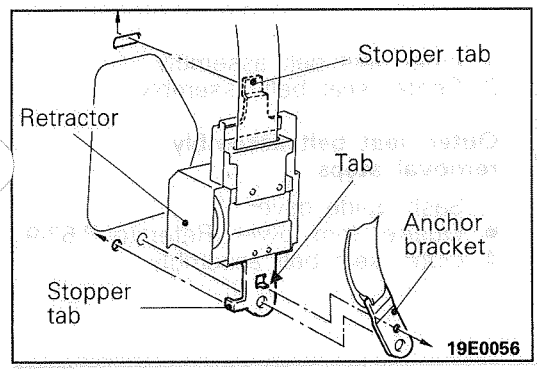

3. INSTALLATION OF OUTER SEAT BELT ASSEMBLY

(1) Securely insert the retractor stopper tab into the body hole.
(2) Securely insert the retractor bracket tab into the anchor bracket hole.

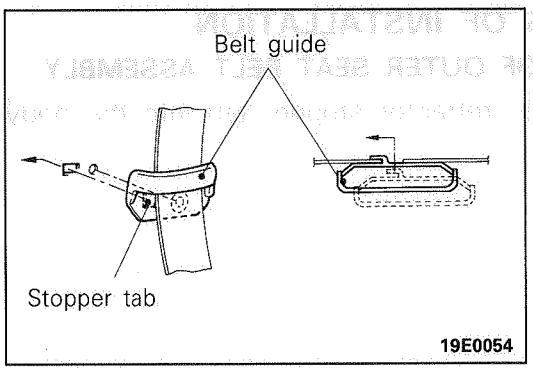

(3) Securely insert the belt guide tab into the body hole.

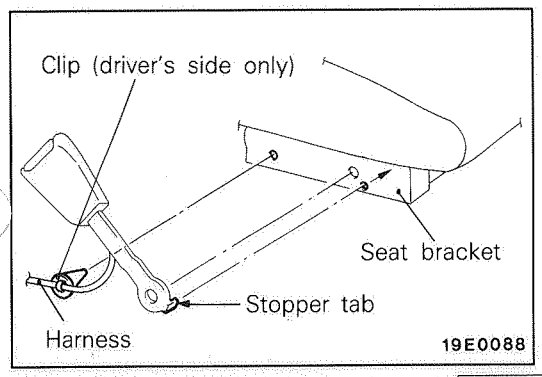

1. INSTALLATION OF INNER SEAT BELT ASSEMBLY

Securely insert the stopper tab into the seat bracket hole.

REAR SEAT BELT

M52UGBL

REMOVAL AND INSTALLATION

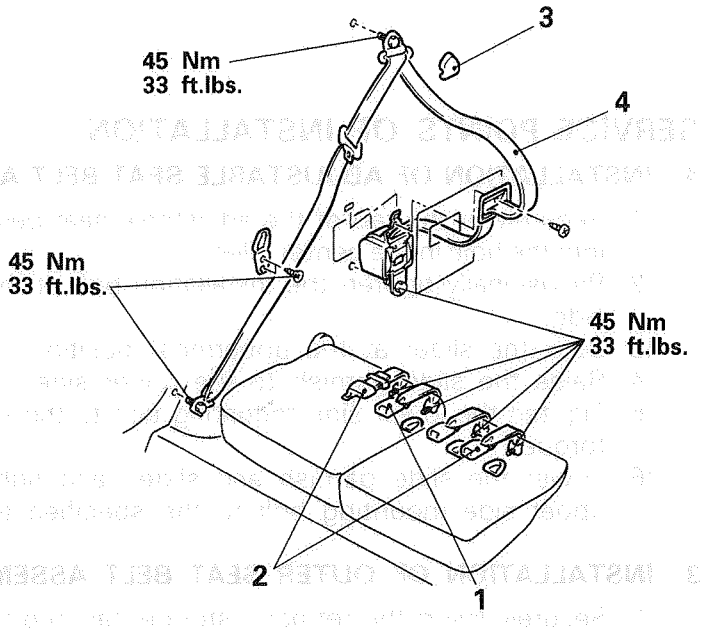

1. Inner seat belt assembly
2. Center seat belt assembly

Outer seat belt assembly removal steps

3. Sash guide cover
   - Quarter trim lower (Refer to P.52-9.)
4. Outer seat belt assembly

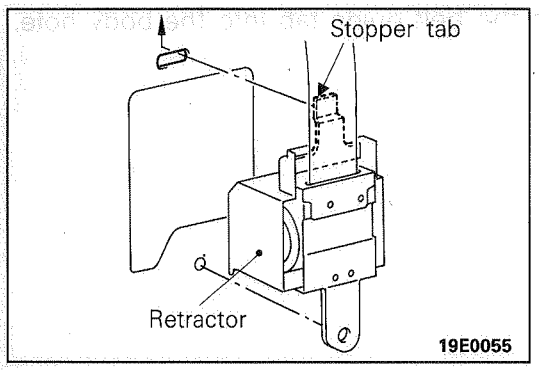

SERVICE POINTS OF INSTALLATION

4. INSTALLATION OF OUTER SEAT BELT ASSEMBLY

Securely insert the retractor stopper tab into the body hole.

HEATER, AIR CONDITIONER AND VENTILATION

CONTENTS

M55AA--

AIR CONDITIONER 12
AIR CONDITIONER CONTROL UNIT 31
AIR CONDITIONER SWITCH 28
COMPRESSOR, TENSION PULLEY 34
CONDENSER AND CONDENSER FAN MOTOR 32
ENGINE COOLANT TEMPERATURE SWITCH 31
EVAPORATOR 29
REFRIGERANT LINE 33
SAFETY PRECAUTIONS 19
SERVICE ADJUSTMENT PROCEDURES 20
- Charging 22
- Compressor Drive Belt Adjustment 22
- Compressor Noise 27
- Handling Tubing and Fittings 26
- Idle-up Operation Check 28
- Performance Test 25
- Power Relay Check 28
- Refrigerant Leak Repair Procedure 26
- Test Procedures 20

SPECIFICATIONS 12
- General Specifications 12
- Sealant 13
- Service Specifications 12
- Lubricants 12

TROUBLESHOOTING 13
HEATER 2
BLOWER ASSEMBLY 8
HEATER CONTROL ASSEMBLY 4
HEATER UNIT 7
SERVICE ADJUSTMENT PROCEDURES 4
- Power Relay Check 4

SPECIFICATIONS 2
- General Specifications 2
- Service Specifications 2

TROUBLESHOOTING 2
VENTILATORS (AIR OUTLET) 11
VENTILATORS (INSTRUMENT PANEL AND FLOOR) 10

HEATER

SPECIFICATIONS

GENERAL SPECIFICATIONS

M55CA--

Items	Specifications
Type	Three-way-flow full-air-mix system
Performance KJ/h (Kcal/h, B.T.U./h)	16,744 (4,000, 15,873)

SERVICE SPECIFICATIONS

M55CB--

Items	Standard value	Remarks
Resistance value of resistor (for blower motor assembly) Ω	1.96 ± 7%	Between terminals 2–4
	0.95 ± 7%	Between terminals 1–2
	0.33 ± 7%	Between terminals 2–3

TROUBLESHOOTING

M55EAAN

Symptom	Probable cause	Remedy
Improper heat	Obstructed floor outlets	Correct
	Changeover dampers improperly adjusted or binding	Correct
	Obstructed heaters hoses	Replace
	Improperly adjusted control cables	Adjust
	Plugged partially plugged heater core	Clearn or replace
No ventilation even when mode selection lever is operated	Incorrect adjustment of changeover dampers	Adjust
	Incorrect installation mode selection control wire	Adjust
	Ducts are incorrectly incompletely connected, crushed, bent or clogged.	Repair or replace

HEATER

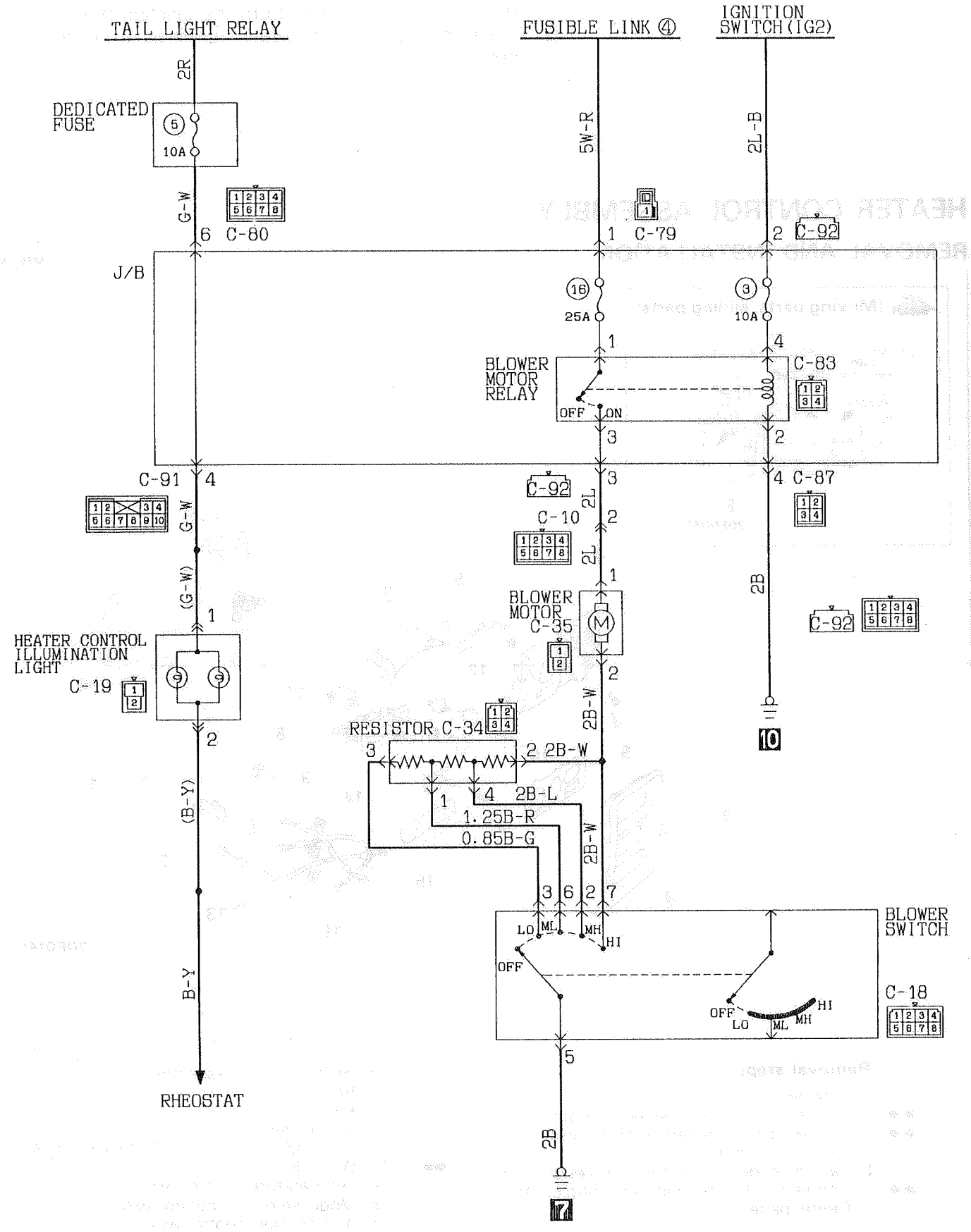

KX35-AC-01201-N

SERVICE ADJUSTMENT PROCEDURES

M55FNAL

POWER RELAY CHECK

(1) Remove the heater relay from the junction box.
(2) Check the continuity between terminals using an ohmmeter.

HEATER CONTROL ASSEMBLY

REMOVAL AND INSTALLATION

M55GA--

(Moving parts, sliding parts)

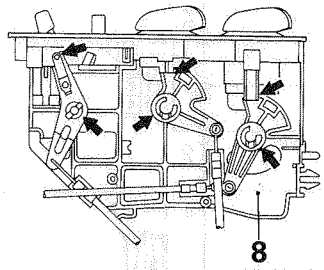

20E0057

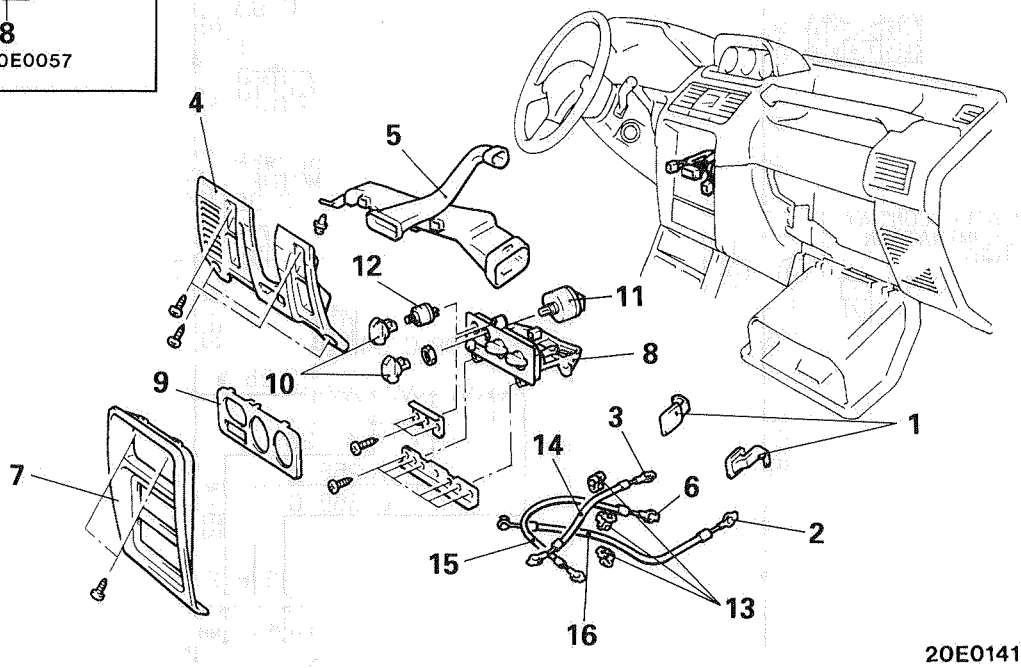

20E0141

Removal steps

1. Stopper
2. Connection for the air-selection control wire
3. Connection for the temperature control wire
4. Instrument under cover
5. Lap cooler duct A and foot shower duct (LH)
6. Connection for the mode selection control wire
7. Center panel
8. Heater control assembly
9. Bezel
10. Knob
11. Blower switch
12. Air conditioner switch<Vehicles with A/C>
13. Wire clip
14. Temperature control wire
15. Mode selection control wire
16. Air-selection control wire

HEATER UNIT

REMOVAL AND INSTALLATION

M55IA--

Per-removal and Post-installation Operation
- Draining and Supplying of the Coolant
- Removal and Installation of the Instrument Panel (Refer to GROUP 52 – Instrument Panel.)

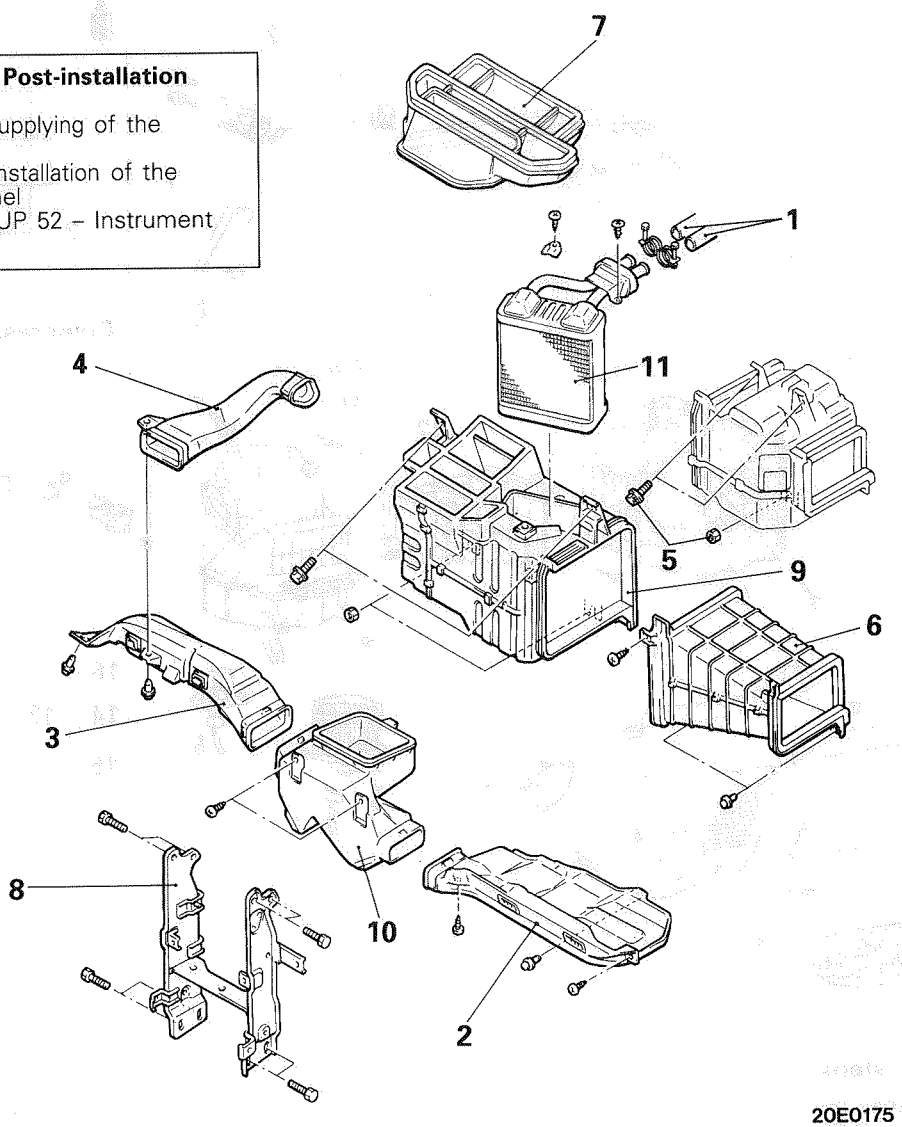

20E0175

Removal steps
1. Connection for water hoses
2. Foot shower duct (RH)
3. Foot shower duct (LH)
4. Lap cooler duct A
5. Evaporator mounting bolt and nut <Vehicles with A/C>
6. Joint duct <Vehicles without A/C>
7. Center duct assembly
8. Center reinforcement
9. Heater unit
10. Foot distribution duct
11. Heater core

INSPECTION

M55ICAK

- Check the operation of dampers and link mechanism.
- Check the heater core for clogging and water leakage.

BLOWER ASSEMBLY

REMOVAL AND INSTALLATION

M55KA--

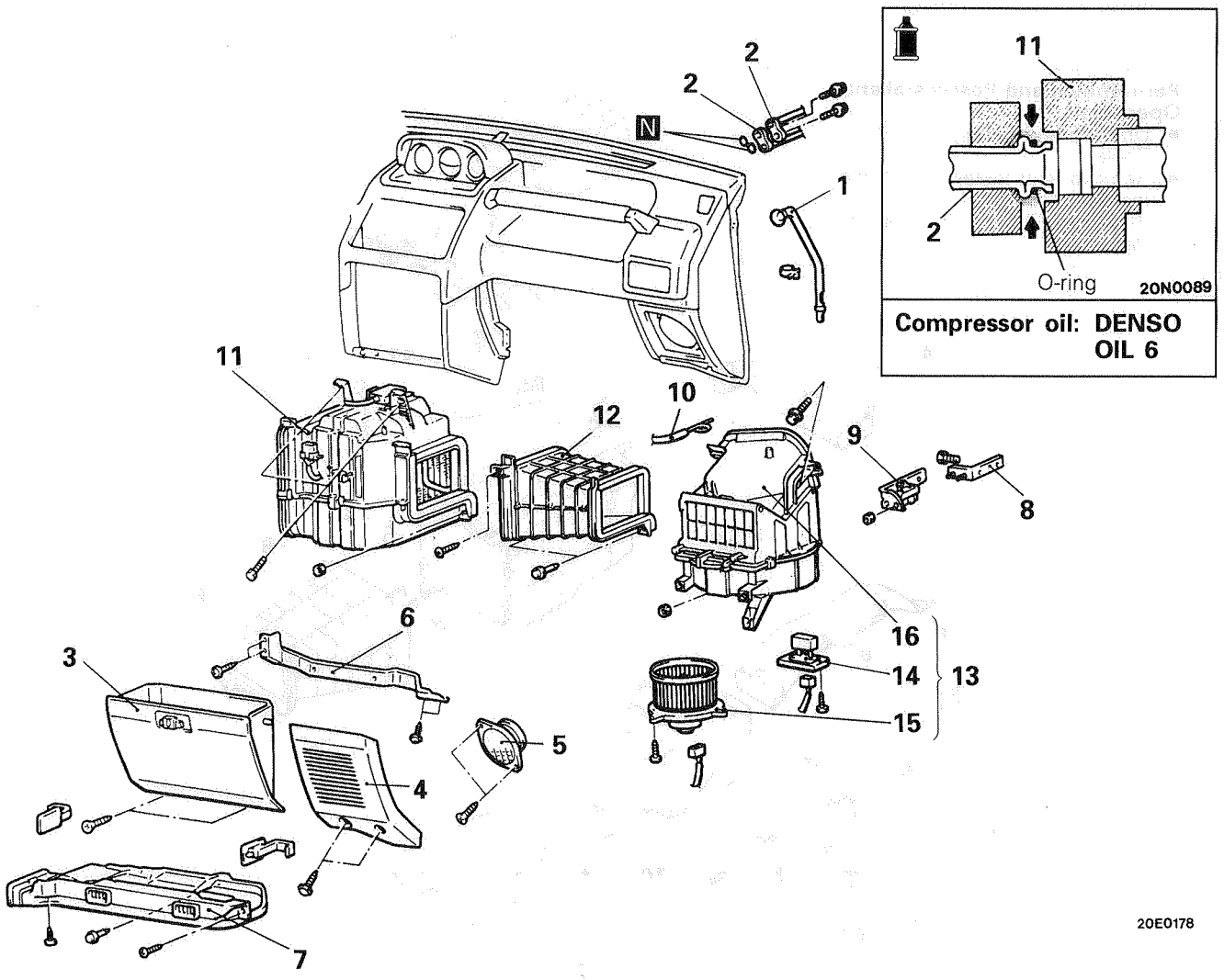

Removal steps

- Discharge and Charging of Refrigerant (Refer to P.55-22, 24) <Vehicles with A/C>

1. Drain hose <Vehicles with A/C>
2. Connection for liquid pipe and suction hose <Vehicles with air conditioner>
3. Glove box
4. Speaker garnish
5. Speaker
6. Lower frame
7. Foot shower duct <RH>
8. Engine control relay assembly
9. Bracket
10. Connection for the air-selection control wire
11. Evaporator <Vehicles with A/C>
12. Joint duct <Vehicles without A/C>
13. Blower assembly
14. Resistor
15. Blower motor assembly
16. Blower case assembly

Removal steps of blower motor assembly

7. Foot shower duct <RH>
13. Blower motor assembly

Removal steps of resistor

7. Foot shower duct <RH>
14. Resistor

INSPECTION M55KCAO

- Check for bending or abnormal deflection of the rotating shaft of the blower motor assembly.
- Check for damage to the fan.
- Check for damage of the blower case.
- Check the operation of the inside/outside air-selection damper, and for damage.

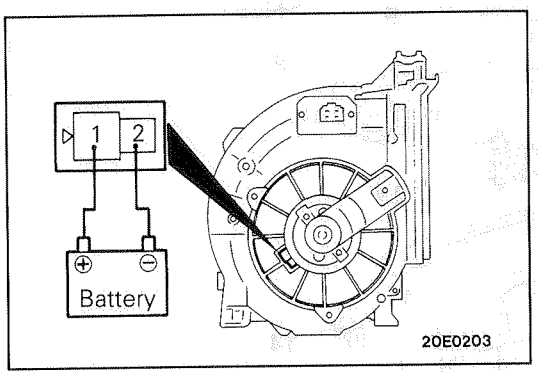

INSPECTION OF BLOWER MOTOR ASSEMBLY

(1) Connect the blower motor terminals directly to the battery and check that the blower motor operates smoothly.
(2) Next, reverse the polarity and check that the blower motor operates smoothly in the reverse direction.

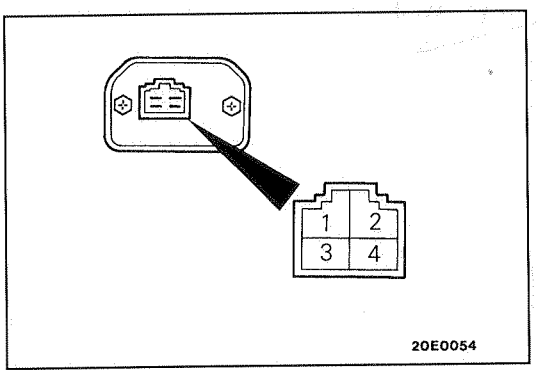

INSPECTION OF RESISTOR

Using an ohmmeter, measure the resistance between the terminals indicated below.
The condition can be considered satisfactory if the value measured at this time is equivalent to the standard value.

Standard value

Terminals measured	Standard value Ω
Between terminals ②–④	Approx. 1.96 ± 7%
Between terminals ①–②	Approx. 0.95 ± 7%
Between terminals ②–③	Approx. 0.33 ± 7%

SERVICE POINT OF INSTALLATION M55KDAI

10. INSTALLATION OF AIR SELECTION CONTROL WIRE

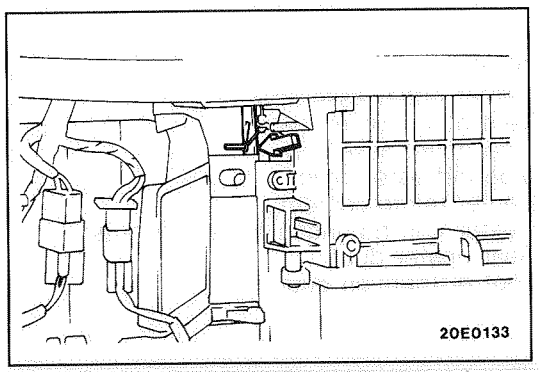

Connect the air selection control wire to the air selection damper lever by following the steps below.
(1) Move the air selection control lever to the position.
(2) With the air selection damper lever pressed inward in the direction indicated by the arrow, connect the inner cable of the air selection control wire to the end of the air selection lever, and then secure outer cable by using a clip.

VENTILATORS (INSTRUMENT PANEL AND FLOOR)

REMOVAL AND INSTALLATION

M55YD--

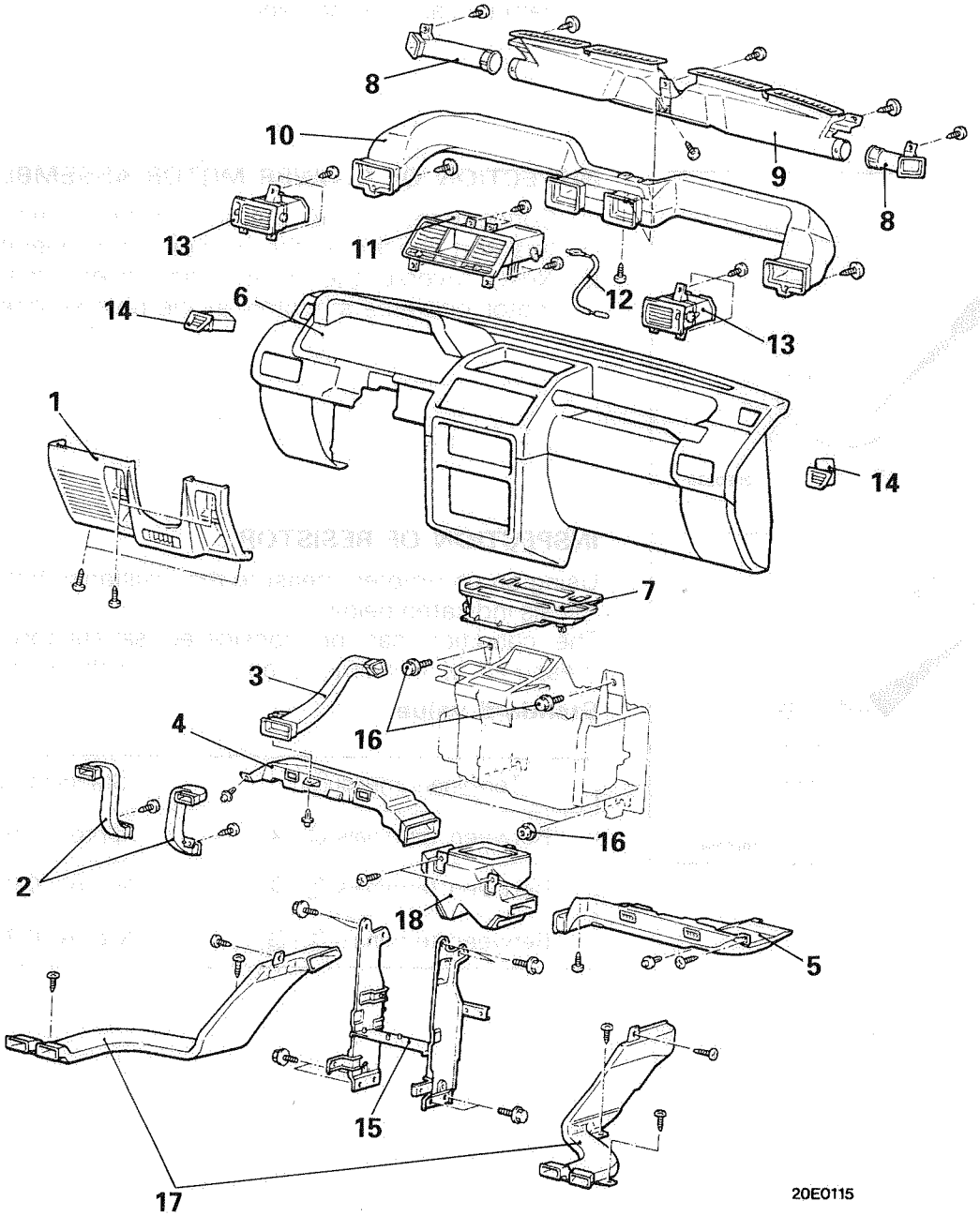

Removal steps

1. Instrument under cover (Refer to GROUP 52 – Instrument Panel)
2. Lap cooler duct B
3. Lap cooler duct A
4. Foot shower duct (LH)
5. Foot shower duct (RH)
6. Instrument panel (Refer to GROUP 52 – Instrument Panel) ◀■▶ ▶■◀
7. Center duct assembly
8. Side defroster duct
9. Defroster nozzle
10. Distribution duct
11. Center outlet assembly
12. Ventilation control wire
13. Side outlet assembly
14. Side defroster grille
15. Center reinforcement
16. Heater unit mounting bolts and nuts
17. Rear heater duct
18. Foot distribution duct

TSB Revision

SERVICE POINT OF REMOVAL M55YEAE

17. REMOVAL OF REAR HEATER DUCT

Remove the front seat, front scuff plate and cowl side trim, and after taking out the floor carpet, remove the rear heater duct.
(Refer to GROUP 52 – Seats and Trims.)

SERVICE POINT OF INSTALLATION M55YGAB

17. INSTALLATION OF REAR HEATER DUCT

After installing the duct, replace the floor carpet and install the front seat, front scuff plate and cowl side trim.
(Refer to GROUP 52 – Seats and Trims.)

VENTILATORS (AIR OUTLET)

REMOVAL AND INSTALLATION M55XA--

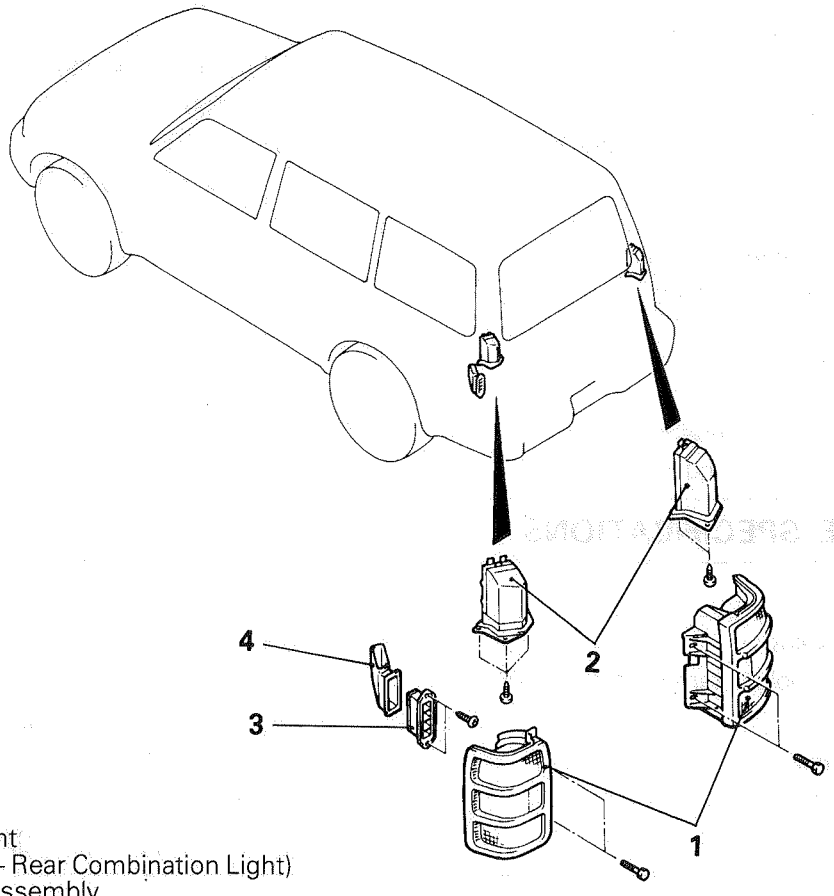

20E0113

Removal steps

1. Rear combination light
   (Refer to GROUP 54 – Rear Combination Light)
2. Rear ventilator duct assembly
3. Air outlet garnish assembly
4. Air outlet duct

AIR CONDITIONER

SPECIFICATIONS

GENERAL SPECIFICATIONS

M55CA-B

Items		Specifications
Compressor		
Model		10PA 15 Inclined-plate type
No. of cylinders and displacement	cm^3	10 cylinders: 155.3
Compressor oil	cm^3	DENSO oil 6 : 80 ± 20
High pressure relief valve	kPa (psi)	
Open		3,160–4,220 (449–600)
Close		2,810 (400)
Protective equipment		
Cycling clutch switch	°C (°F)	
OFF		1.0 (22)
ON		4.5 (39)
Dual pressure switch	kPa (psi)	
Low-pressure side		
OFF		210 ± 20 (30 ± 3)
Differential		25 (3.6) or less
High-pressure side		
OFF		2,700 ± 200 (384 ± 28)
ON		2,100 ± 200 (299 ± 28)
Engine coolant temperature switch	°C (°F)	
OFF		115 ±3 (239 ± 4)
ON		108 (226)
Freezer prevention		
Air thermo sensor	°C (°F)	
OFF		3 (37)
ON		4 (39)
Fusible plug (Burn out temperature)	°C (°F)	Burn out temperature 103 ± 3 (217 ± 5)
Refrigerant and quantity	gr (oz.)	R–12 : 800 (28)

SERVICE SPECIFICATIONS

M55CB--

Items		Specifications
Standard value		
Engine coolant temperature switch	°C (°F)	
		112–118 (234–244) or more
Idle speed	rpm	700 ± 100
Idle-up speed	rpm	900 ± 100
Clutch clearance	mm (in)	0.35–0.65 (.0138–.0256)

LUBRICANTS

M55CD--

Items		Specified lubricants	Quantity
Each connection of refrigerant line		DENSO OIL 6	As required
Compressor refrigerant unit lubricant	cm^3		80

TSB Revision

SEALANT

M55CE--

Items	Specified sealant and adhesive
Engine coolant temperature switch threaded part	3M Nut Locking Part No. 4171 or equivalent

TROUBLESHOOTING

M55EBAU

Before replacing or repairing air conditioning components,first determine if the malfunction is; due to refrigerant charge, air flow, or compressor related.
The following diagnostic charts have been developed as a "quick reference" and in determining the cause of malfunction. If these charts do not satisfactorily describe the problem, refer to appropriate section for detailed explanation.
After correcting the malfunction, check out the complete system to assure satisfactory performance.

MALFUNCTION CAUSES AND REMEDIES (Numbers indicate checking/inspection order.)

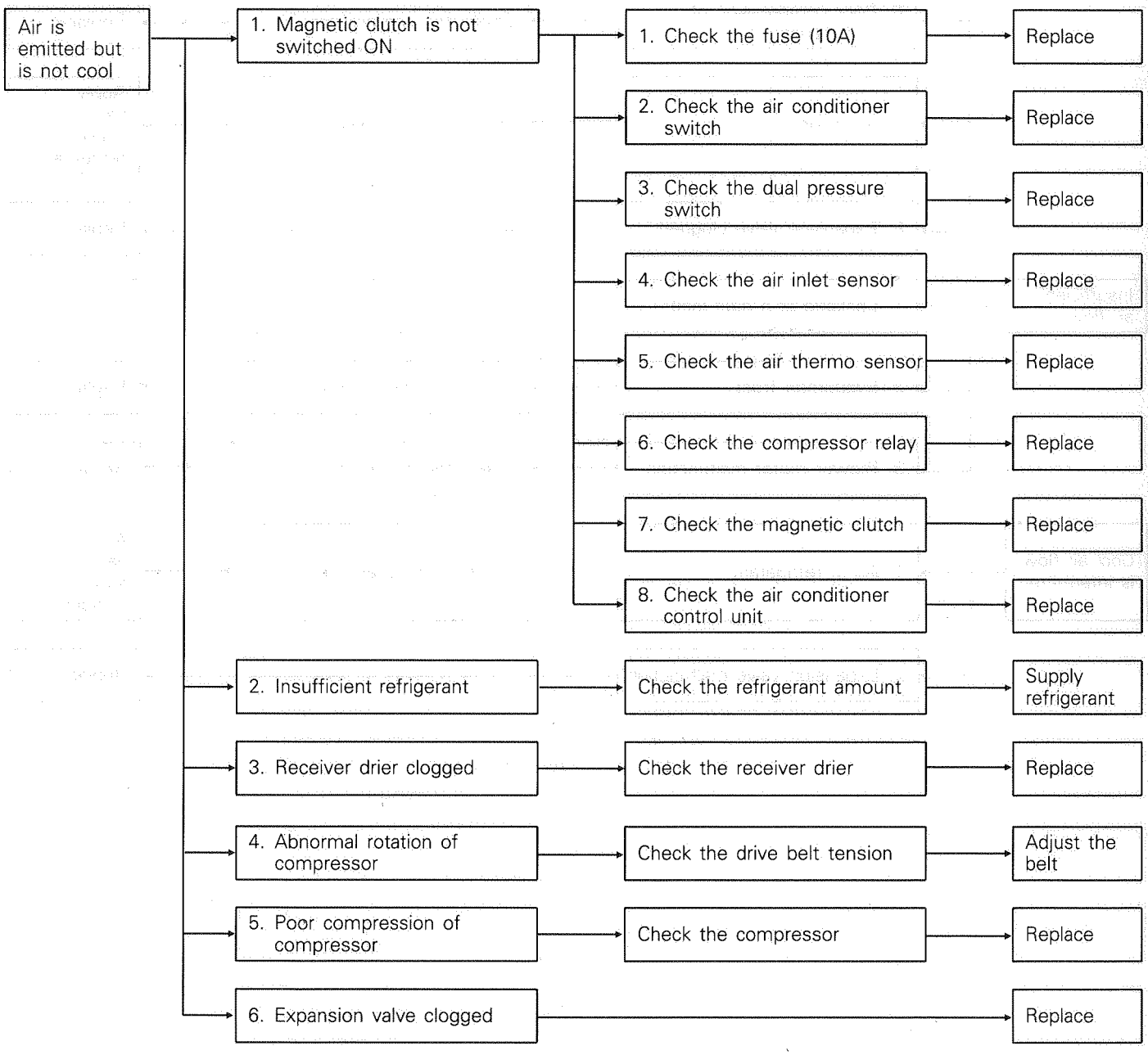

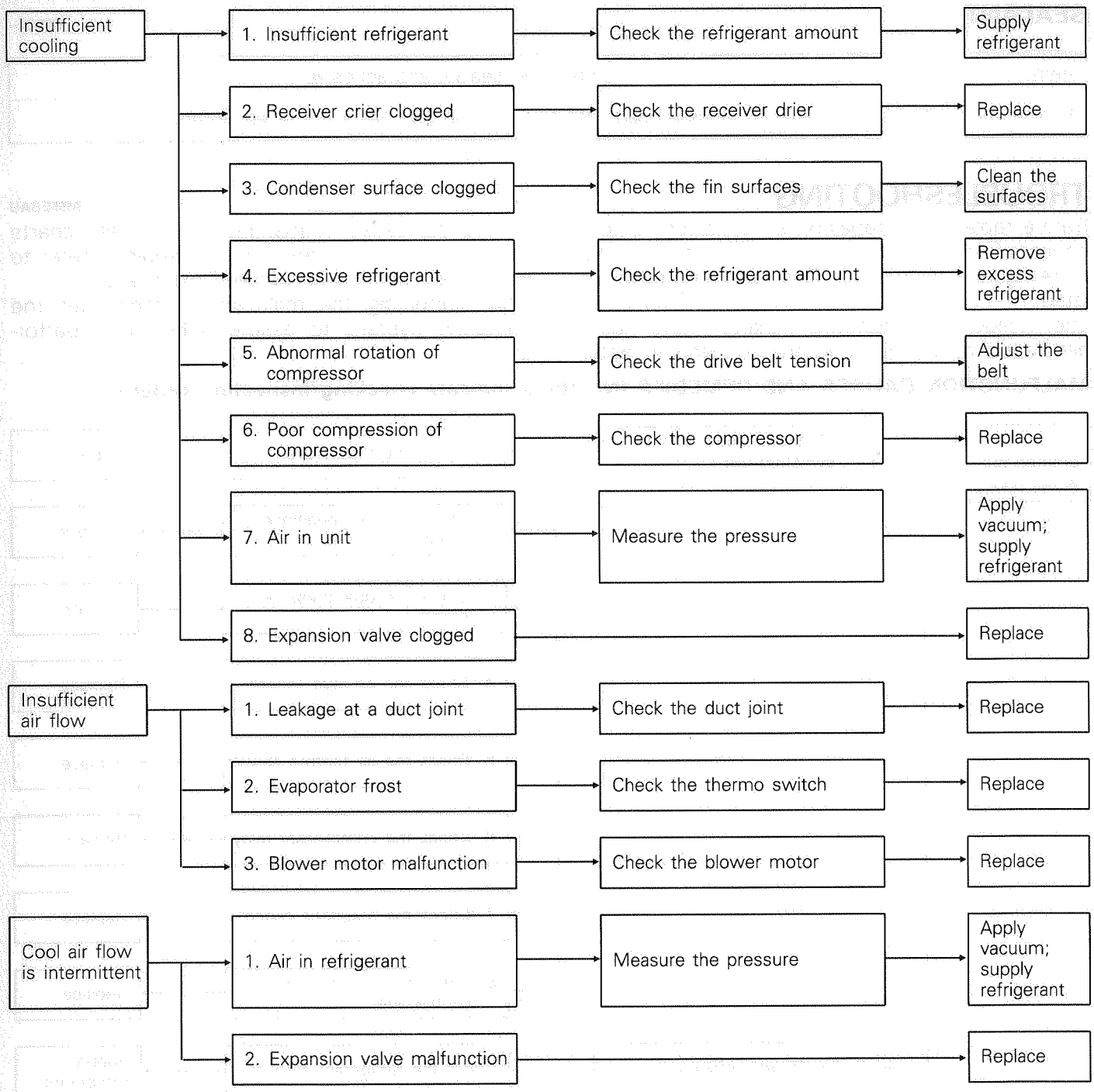

TSB Revision

AIR CONDITIONER

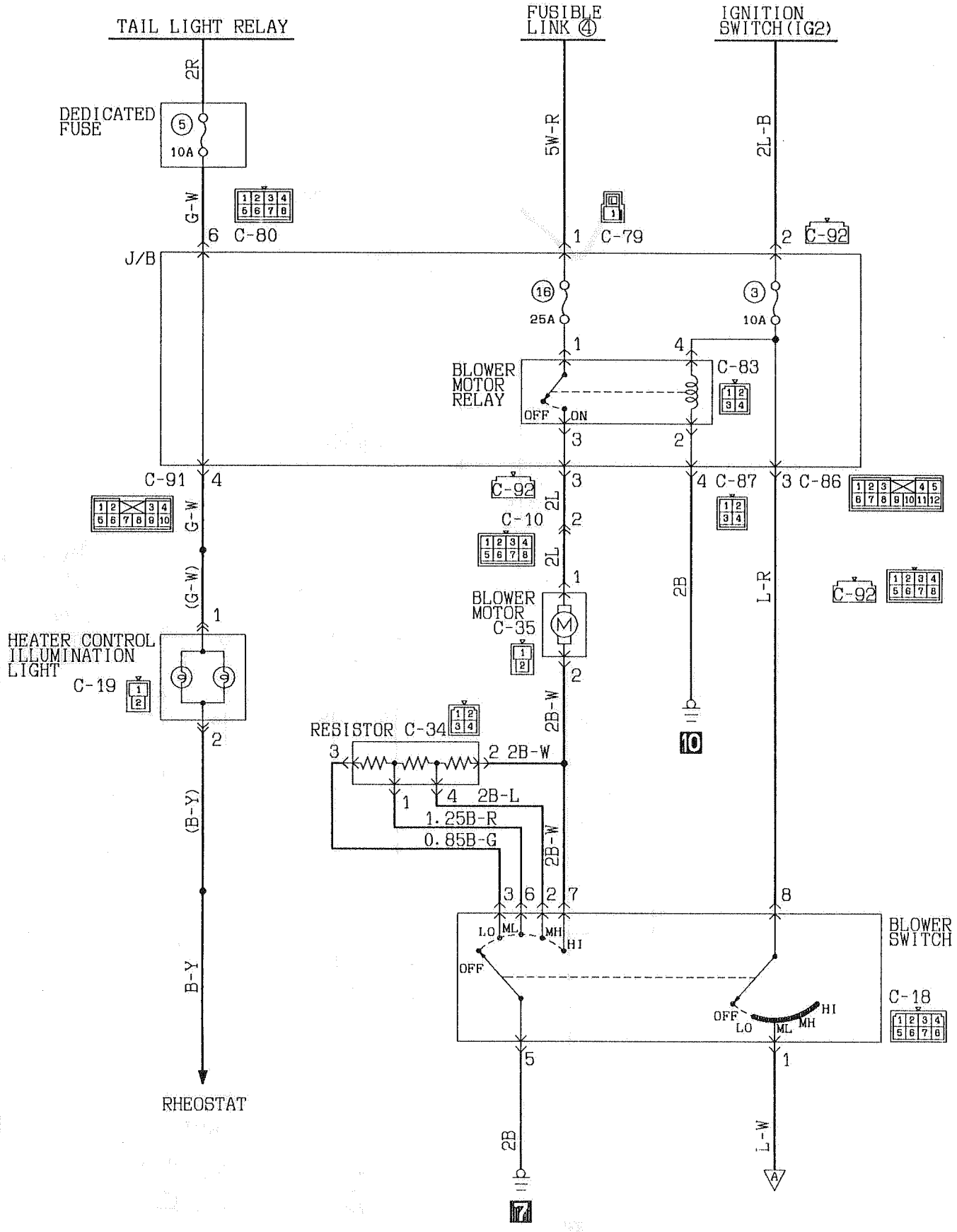

KK35-AC-01202-N

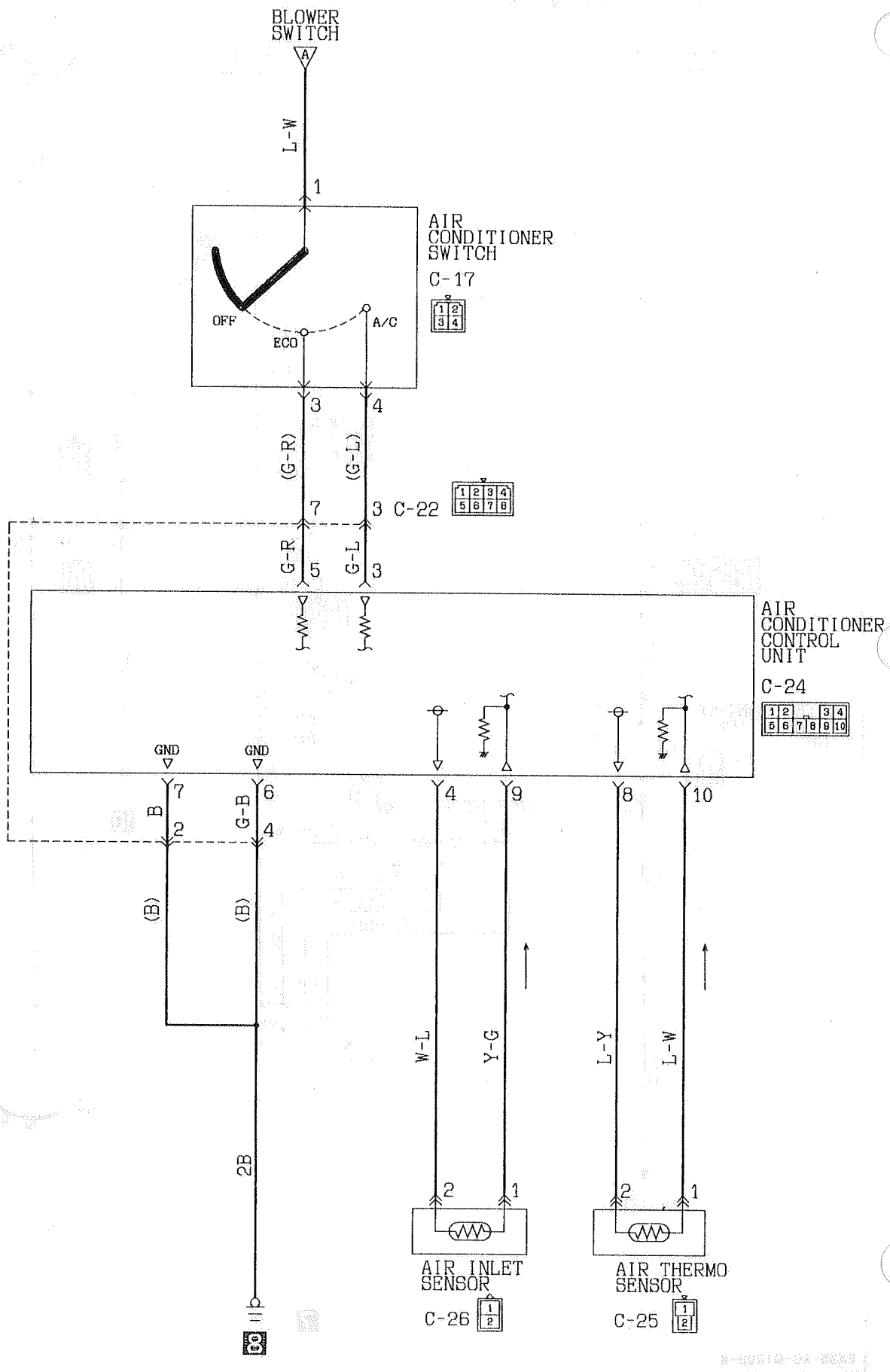

KK35-AC-Q1202A-N

TSB Revision

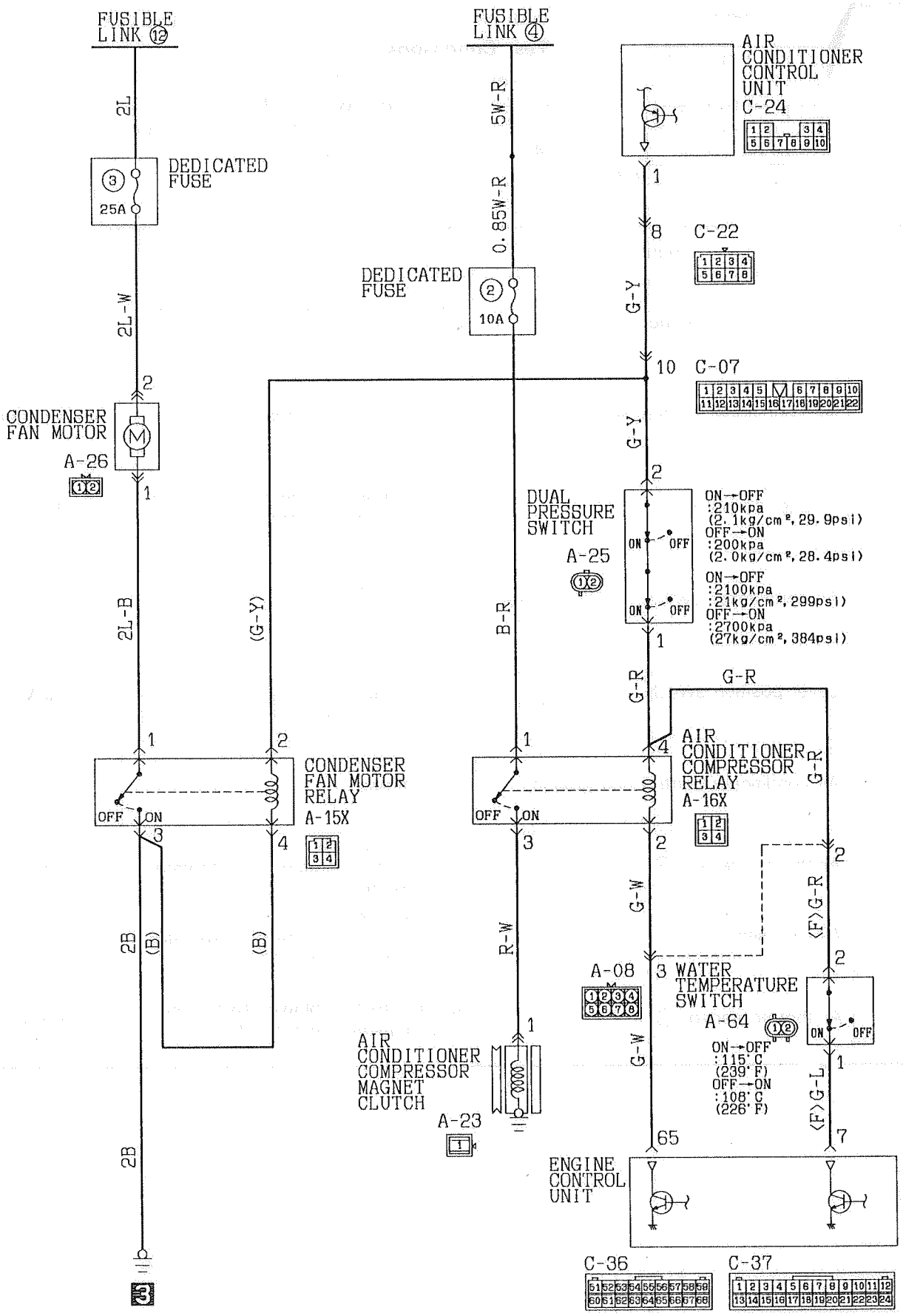
FUSIBLE LINK ⑫
FUSIBLE LINK ④
2L
5W-R
0.85W-R
DEDICATED FUSE
25A
DEDICATED FUSE
10A
AIR CONDITIONER CONTROL UNIT
C-24
C-22
C-07
2L-W
G-Y
CONDENSER FAN MOTOR
A-26
DUAL PRESSURE SWITCH
A-25
ON→OFF :210kpa (2.1kg/cm², 29.9psi)
OFF→ON :200kpa (2.0kg/cm², 28.4psi)
ON→OFF :2100kpa :21kg/cm², 299psi)
OFF→ON :2700kpa (27kg/cm², 384psi)
2L-B
(G-Y)
B-R
G-R
CONDENSER FAN MOTOR RELAY
A-15X
AIR CONDITIONER COMPRESSOR RELAY
A-16X
2B
(B)
R-W
G-W
⟨F⟩G-R
A-08
WATER TEMPERATURE SWITCH
A-64
ON→OFF :115°C (239°F)
OFF→ON :108°C (226°F)
⟨F⟩G-L
AIR CONDITIONER COMPRESSOR MAGNET CLUTCH
A-23
ENGINE CONTROL UNIT
C-36
C-37

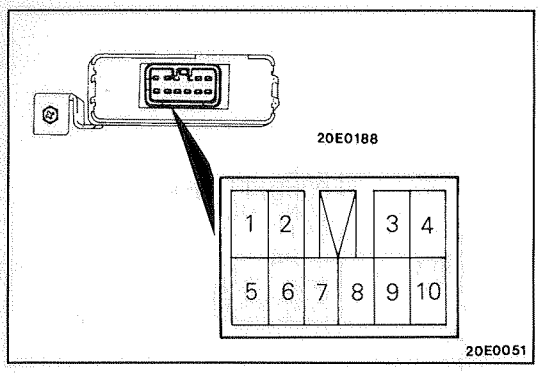

TROUBLESHOOTING HINTS

Inspection of Air Conditioner Control Unit

Disconnect the amplifier and inspect the connector on the wire harness side as shown in the chart below.

Test Conditions:

(1) Ignition switch: ON
(2) Air conditioner switch: ON
(3) Temperature control lever: MAX. COOL
(4) Blower switch: HI

Terminal No.	Signal	Conditions	Terminal voltage
1	Air conditioner output	When all conditions for switch-ON of the compressor are satisfied	System voltage
3	Air conditioner switch: A/C	Air conditioner switch A/C position	System voltage
4	Air-inlet sensor ⊕	Ignition switch, blower switch and air conditioner switch: ON	5.5 V
5	Air conditioner switch: ECONO or A/C	Air conditioner switch : ECONO or A/C	System voltage
6	Lever position switch	At all times	0 V
7	Air conditioner control unit ground	At all times	0 V
8	Air-thermo sensor ⊖	Terminals ⑩–⑧ [when a temperature of evaporator outlet portion is 3°C (37°F)]	3.6 V
9	Air-inlet sensor ⊖	Terminals ④–⑨ [when a temperature of evaporator inlet portion is 25°C (77°F)]	1.5 V
10	Air-thermo sensor ⊕	Ignition switch, blower switch and air conditioner switch: ON	5.5 V

SAFETY PRECAUTIONS

M55PAAF

R-12 refrigerant is a chlorofluoro-carbon (CFC) that can contribute to the depletion of the ozone layer in the upper atmosphere.
Ozone filters out harmful radiation from the sun. To assist in protecting the ozone layer, Mitsubishi Motor Sales of America recommends that a R-12 refrigerant recycling device that meets SAE standard J1991 be used.
Contact an automotive service equipment supplier for refrigerant recycling equipment that is available in your area.
The refrigerant used in all air conditioner is R-12. It is transparent and colourless in both liquid and vapour state. Since it has a boiling point of –29.8°C (–21.7°F), at atmospheric pressure, it will be a vapour at all normal temperatures and pressures. The vapour is heavier than air, nonflammable, and nonexplosive. It is nonpoisonous except when it is in direct contact with open flame. It is noncorrosive except when combined with water. The following precautions must be observed when handling R-12.

Caution
Wear safety goggles when servicing the refrigeration system.

R-12 evaporates so rapidly at normal atmospheric pressures and temperatures that it tends to freeze anything it contacts. For this reason, extreme care must be taken to prevent any liquid refrigerant from contacting the skin and especially the eyes. Always wear safety goggles when servicing the refrigeration part of the air conditioning system. Keep a bottle of sterile mineral oil handy when working on the refrigeration system. Should any liquid refrigerant get into the eyes, use a few drops of mineral oil to wash them out. R-12 is rapidly absorbed by the oil Next, splash the eyes with plenty of cold water. Call your doctor immediately even though irritation has ceased after treatment.

Caution
Do not heat R-12 above 52°C (125.6°F).

In most instances, moderate heat is required to bring the pressure of the refrigerant its container above the pressure of the system when charging or adding refrigerant. A bucket or large pan of hot water not over 52°C (125.6°) is all the heat required for this purpose. Do not heat the refrigerant container with a blow torch or any other means that would raise temperature and pressure above this temperature. Do not weld or steam clean on or near the system components or refrigerant lines.

Caution
Keep R-12 containers upright when charging the system.

When metering R-12 into the refrigeration system, keep the supply tank or cans in an upright position. If the refrigerant container is on its side or upside down, liquid refrigerant will enter the system and damage the compressor.

Caution
Always work in a well-ventilated room.

Good ventilation is vital in the working area.
Although R-12 vapour is normally nonpoisonous, contact with an open flame can cause the vapour to become very poisonous.
A poisonous gas is produced when using the flame-type leak detector. Avoid inhaling the fumes from the leak detector.

Caution
Do not allow liquid refrigerant to touch bright metal.

Refrigerant will tarnish bright metal and chrome surfaces, and in combination with moisture can severely corrode all metal surfaces.

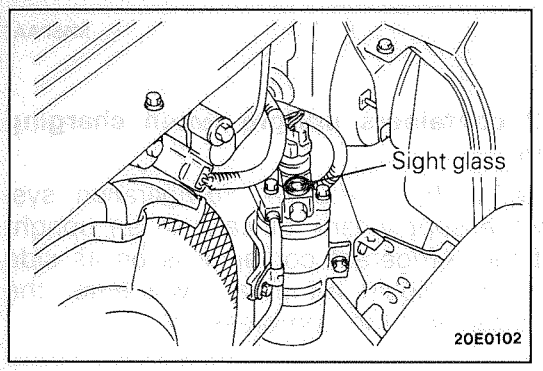

SERVICE ADJUSTMENT PROCEDURES

TEST PROCEDURES

M55FEAV

SIGHT GLASS REFRIGERANT LEVEL TEST

The sight glass is a refrigerant level indicator. To check the refrigerant level, clean the sight glass and start the vehicle engine. Push the air conditioner button to operate the compressor, place the blower switch to high and move the temperature control lever to max cool. After operating for a few minutes in this manner, check the sight glass.

(1) If the sight glass is clear, the magnetic clutch is engaged,the compressor discharge line is warm and the compressor inlet line is cool; the system has a full charge.
(2) If the sight glass is clear, the magnetic clutch is engaged and there is no significant temperature difference between compressor inlet and discharge lines; the system has lost some refrigerant.
(3) If the sight glass shows foam or bubbles, the system could be low on charge. The system has to be charged with some refrigerant.

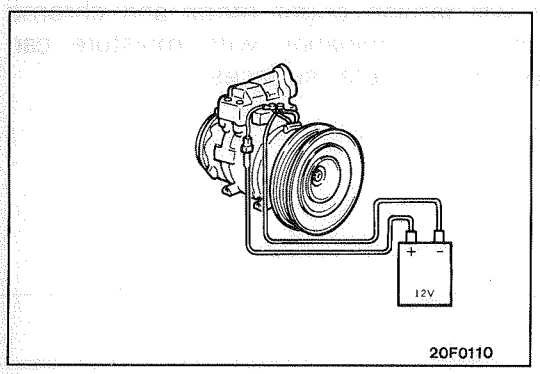

MAGNETIC CLUTCH

(1) Disconnect the wiring to the magnetic clutch.
(2) Connect battery (+) voltage directly to wiring for the magnetic clutch.
(3) If the magnetic clutch is normal, there will be a "click" If the pulley and armature do not make contact ("click"), there is a malfunction.

RECEIVER DRIER

To Test the Receiver Drier

(1) Operate the unit and check the piping temperature by touching the receiver drier outlet and inlet.
(2) If there is a difference in the temperatures, the receiver drier is restricted.
Replace the receiver drier.

DUAL PRESSURE SWITCH (LOW PRESSURE SWITCH)

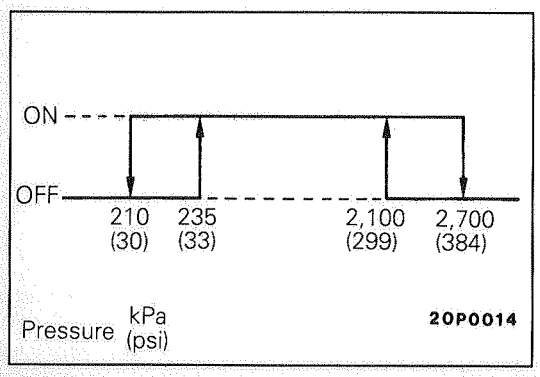

(1) Turn back the adaptor valve handle all the way and install it to the low pressure side service valve.
(2) With the gage manifold low pressure service valves closed, connect the gage manifold high pressure side charging hose to the adaptor valve.
(3) Tighten the adaptor valve handle and open the service valve.
(4) If there in continuity between the dual pressure switch terminals when the low pressure side pressure is at the level of dual pressure switch ON condition shown to the left, the switch is functioning normally. If not, replace the switch.

TSB Revision

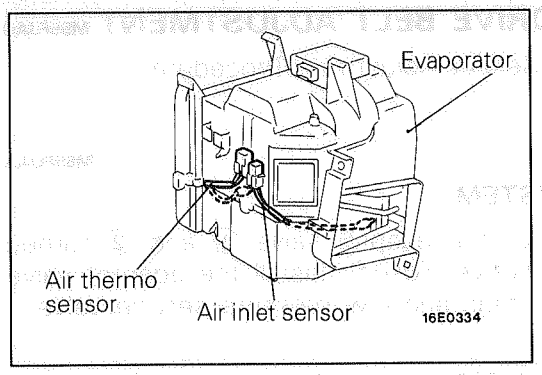

AIR-THERMO SENSOR AND AIR-INLET SENSOR

(1) Disconnect the sensor's connector at the evaporator case and by using an ohmmeter, measure the resistance. If the resistance is within 10% of value of the characteristic curve,the sensor is functioning normally.
(2) If the sensor is normal, there is a malfunction of the air conditioner control unit, and it should by replaced.

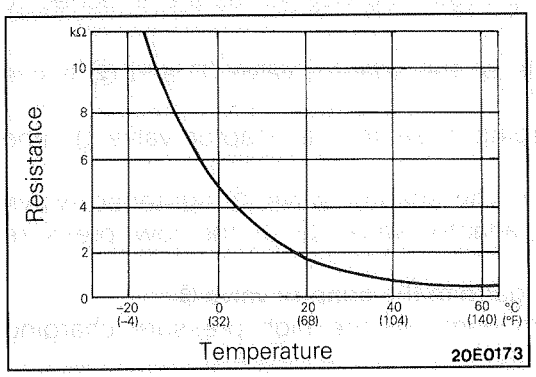

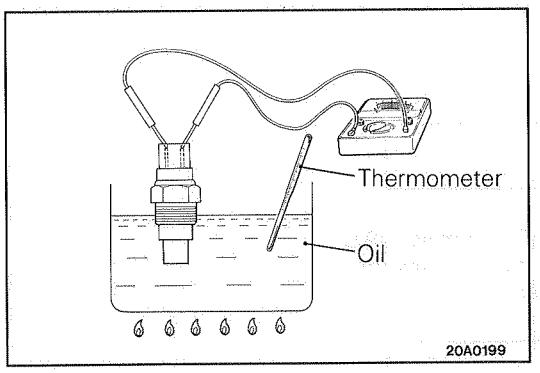

ENGINE COOLANT TEMPERATURE SWITCH

(1) Dip the engine coolant temperature switch in oil and heat the oil with a gas burner or similar item.
(2) When the oil temperature reaches the standard value, check that there is no continuity between the switch terminals.

Standard value: 112–118°C (234–244°F)

COMPRESSOR DRIVE BELT ADJUSTMENT M55FJAG

Refer to GROUP 11 – Service Adjustment Procedures.

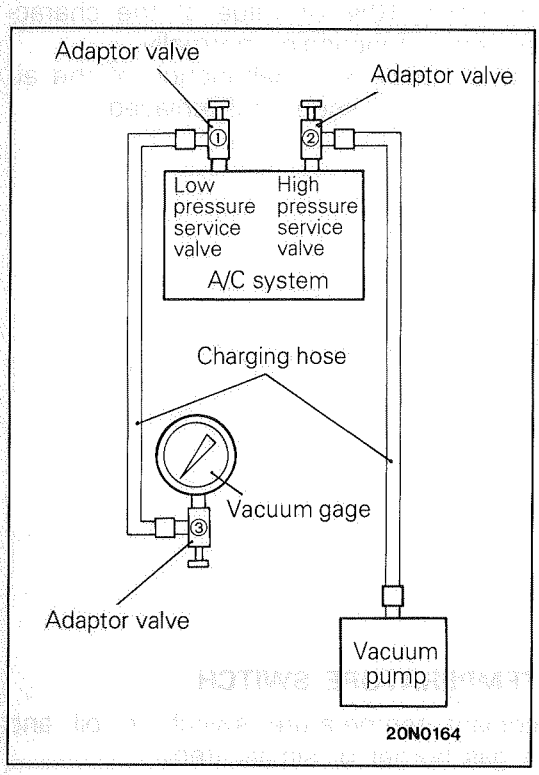

CHARGING M55FUAA

CHARGING THE SYSTEM

(1) With the handle of the adaptor valve ① and ② turned back all the way (valve closed), install the adaptor valve ① and ② to each high and low pressure service valve.

NOTE
The high and low pressure service valves are attached to the compressor.

(2) Tighten the handle of the adaptor valve ① and ② (valve open).
(3) Connect the charging hose to the adaptor valve ① and ②.
(4) With the handle of the adaptor valve ③ tightened (valve open), install the adaptor valve ③ to the low pressure charging hose.
(5) Install the vacuum gage to the adaptor valve ③.
(6) Install the vacuum pump to the high pressure charging hose.

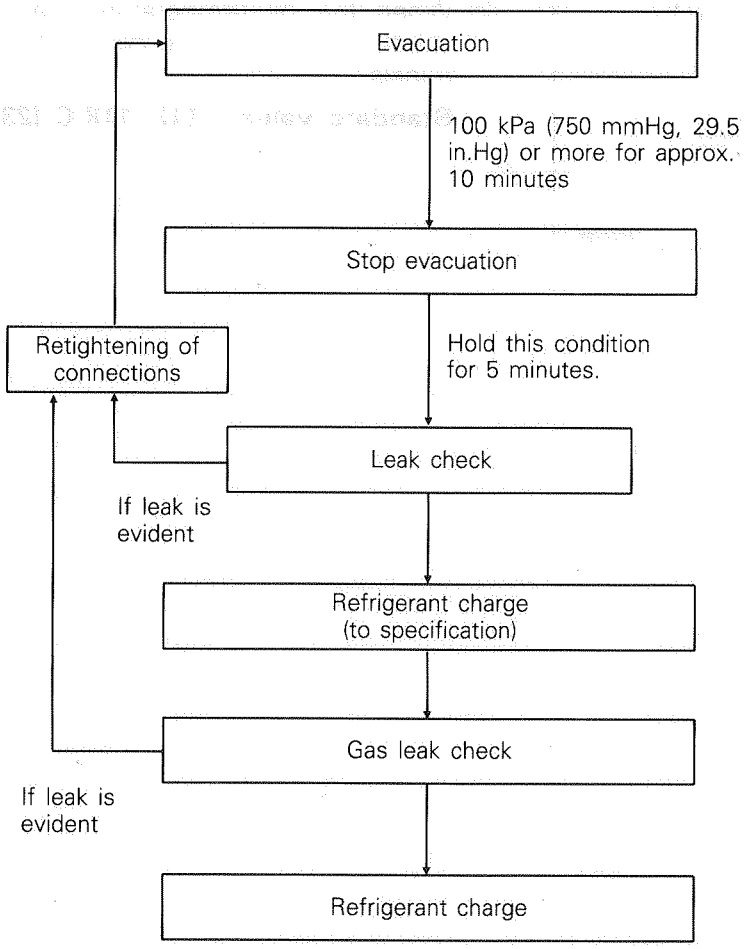

TSB Revision

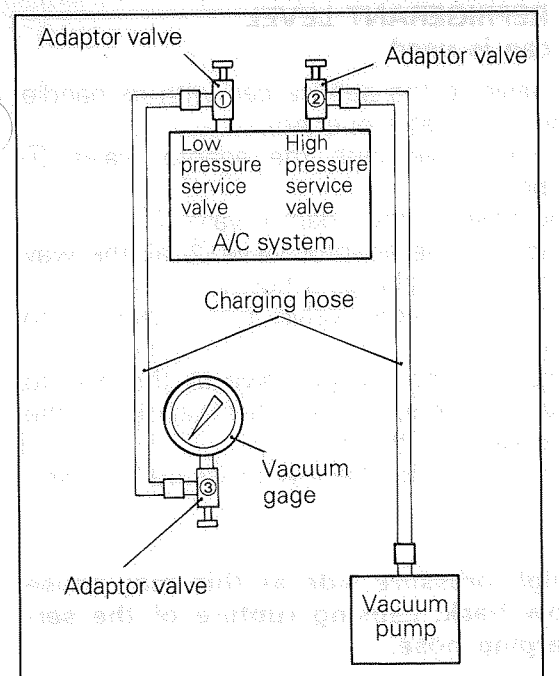

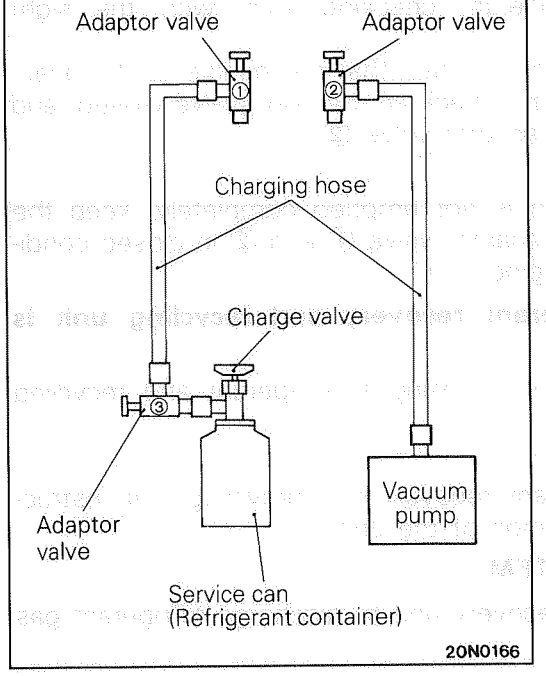

(7) Start up the vacuum pump.
(8) Evacuate to a vacuum reading of 100 kPa (750 mmHg, 29.5 in.Hg) or higher (approx. 10 minutes).

Caution
The vacuum reading should always be made with the vacuum gage in an upright position, otherwise the reading will be erratic.

(9) Turn the handle of the adaptor valve ② back all the way (valve closed).
(10) Stop the vacuum pump and allow to stand for 5 minutes.
(11) Check for leaks. (Good if the vacuum is held.)
(12) With the handle of the charge valve turned back all the way (valve open), install the charge valve.
(13) With the handle of the special tool ③ turned back all the way (valve closed), remove the vacuum gage and install the service can.
(14) Tighten the handle of charge valve (valve closed) to puncture the service can.
(15) Turn the handle of charge valve back (valve open) and tighten the adaptor valve ③ handle (valve open), to charge the system with refrigerant.
(16) If the refrigerant is not drawn in, turn the handle of the adaptor valve ① back all the way (valve closed).
(17) Check for gas leaks using a leak detector.
(18) Start the engine.
(19) Operate the air conditioner and set at the lowest temperature. (MAX. COOL).
(20) Fix the engine speed at 1,500 rpm.
(21) Tighten the handle of the adaptor valve ① fully (valve open) to charge the required volume of refrigerant.

Caution
If the service can is inverted, liquid refrigerant may be drawn into the compressor damaging it by liquid compression. Keep the service can upright to ensure that refrigerant is charged in gas state.

(22) After charging with refrigerant, turn the handle of the adaptor valve ① back all the way (valve closed).
(23) Tighten the charge valve handle (valve closed).
(24) Remove the adaptor valve ① and ② from the high and low pressure service valves.
(25) Remove the service can.

NOTE
If the service can is not emptied completely, keep the charge valve and adaptor valve ① and ③ in closed condition for next charging.

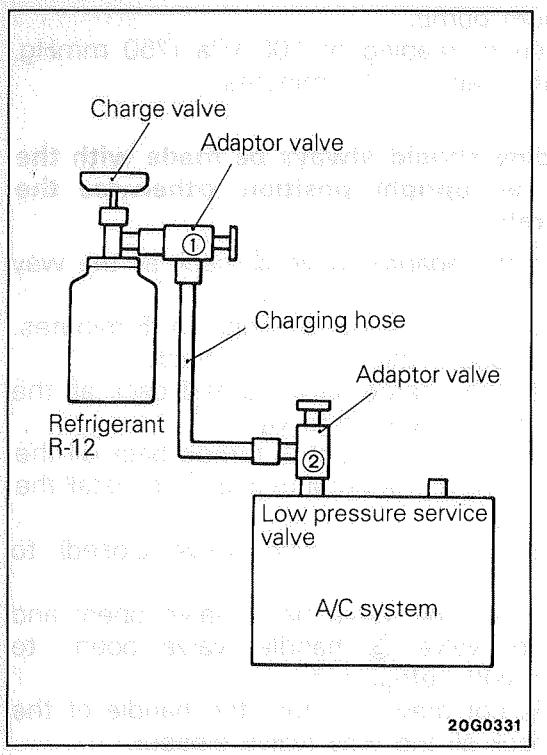

CORRECTING LOW REFRIGERANT LEVEL

In case the service can is used

(1) Install the charge valve to the service can with its handle turned back all the way (valve opened).
(2) Install to the charge valve with the adaptor valve ① tightened (valve open).
(3) Install the charging hose to the adaptor valve ①.
(4) Turn back the handle of the adaptor valve ② all the way (valve closed) to install the charging hose.
(5) Tighten the handle of charge valve (valve closed) to puncture the service can.
(6) Turn back the handle of the charge valve all the way to open the valve (valve open), operate the handle of the adaptor valve ② to vacuum the air.
(7) Install the adaptor valve ② to the low pressure side service valve.

Caution
Never use the high pressure side as this may cause refrigerant to flow back, causing rupture of the service can and charging hose.

(8) Start the engine.
(9) Operate the air conditioner and set it to the lowest temperature (MAX. COOL).
(10) Fix the engine speed at 1,500 rpm.
(11) Tighten the handle of the adaptor valve ② (valve open) and charge refrigerant checking level with the sight glass.
(12) After working, make certain that the handle of the adaptor valve ② is turned back all the way (valve closed) and then remove the adaptor valve ②.

NOTE
If the service can is not emptied completely, keep the charge valve and adaptor valve ① and ② in closed condition for next charging.

In case the refrigerant recovery and recycling unit is used

Charge the refrigerant by using a refrigerant and recycling unit.

NOTE
Refer to the refrigerant recovery and recycling unit instruction manual for operation of the unit.

DISCHARGING SYSTEM

Use the refrigerant recovery unit to discharge refrigerant gas from the system.

NOTE
Refer to the refrigerant recovery and recycling unit instruction manual for operation of the unit.

REFILLING OF OIL IN THE AIR-CONDITIONER SYSTEM

Too little oil will provide inadequate compressor lubrication and cause a compressor failure. Too much oil will increase discharge air temperature.
When a 10PA15 compressor is installed at the factory, it contains 80 cm^3 of refrigerant oil. While the air conditioning system is in operation, the oil is carried through the entire system by the refrigerant.
Some of this oil will be trapped and retained in various parts of the system.
When the following system components are charged, it is necessary to add oil to the system to replace the oil being removed with the component.

Condenser: 30 cm^3
Evaporator: 60 cm^3
Piping: 10 cm^3
Receiver drier: 10 cm^3

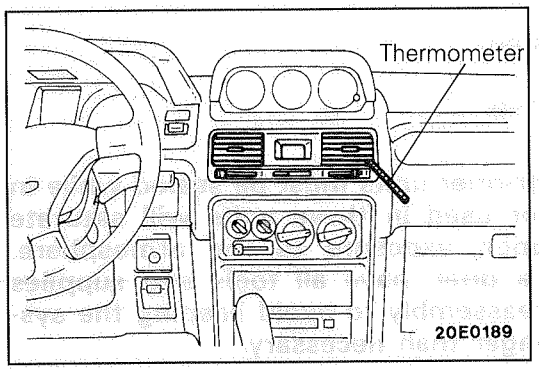

PERFORMANCE TEST M55FWAI

(1) The vehicle to be tested should be in a place that is not in direct sunlight.
(2) Connect a tachometer.
(3) Turn back the handle of the adaptor valve (valve closed) and install the adaptor valves to the high pressure and low pressure service valved.
(4) Connect the gage manifold to the adaptor valves.
(5) Tighten the handle of the adaptor valves (valve open).
(6) Start the engine.
(7) Set the controls to the air conditioner as follows:
Air conditioning switch: Air conditioner – ON position
Mode selection: Face position
Temperature control: Max. cooling position
Air selection: Recirculation position
Blower switch: HI (Fast) position
(8) Adjust engine speed to 1,000 rpm with air conditioner clutch engaged.
(9) Engine should be warmed up with doors, windows closed and hood open.
(10) Insert a thermometer in the left center air conditioner outlet and operate the engine for 20 minutes.
(11) Note the discharge air temperature.

NOTE
If the clutch cycles, take the reading before the clutch disengages.

Performance Temperature Chart

Garage ambient temperature °C (°F)	21 (70)	26.7 (80)	32.2 (90)	37.8 (100)	43.3 (110)
Discharge air temperature °C (°F)	3.0–6.0 (37.4–42.8)	3.0–7.0 (37.4–44.6)	3.5–7.5 (38.3–45.5)	4.0–8.0 (39.2–46.4)	4.5–8.5 (40.1–47.3)
Compressor discharge pressure kPa (psi)	980–1,230 (139.4–174.9)	1,050–1,300 (149.3–184.9)	1,130–1,380 (160.7–196.3)	1,270–1,580 (180.6–224.7)	1,330–1,740 (189.2–247.5)
Compressor suction pressure kPa (psi)	120–220 (17.1–31.3)	120–230 (17.1–32.7)	130–240 (18.5–34.1)	150–270 (21.3–38.4)	170–280 (24.2–39.8)

REFRIGERANT LEAK REPAIR PROCEDURE M55FHAR

Lost Charge

If the system has lost all charge due to a leak:

(1) Evacuate the system. (See procedure.)
(2) Charge the system with approximately one pound of refrigerant.
(3) Check, for leaks.
(4) Discharge the system.
(5) Repair leaks.
(6) Replace receiver drier.

Caution
Replacement filter-drier units must be sealed while in storage. The drier used in these units will saturate water quickly upon exposure to the atmosphere. When installing a drier, have all tools and supplies ready for quick reassembly to avoid keeping the system open any longer than necessary.

(7) Evacuate and charge the system.

Low Charge

If the system has not lost all of its refrigerant charge; locate and repair all leaks. If it is necessary to increase the system pressure to find the leak (because of an especially low charge), add refrigerant. If it is possible to repair the leak without discharging the refrigerant system, use the procedure for correcting low refrigerant level.

HANDLING TUBING AND FITTINGS M55FIAG

Kinks in the refrigerant tubing or sharp bends in the refrigerant hose lines will greatly reduce the capacity of the entire system. High pressures are produced in the system when it is operating. Extreme care must be exercised to make sure that all connections are pressure tight. Dirt and moisture can enter the system when it is opened for repair or replacement of lines or components. The following precautions must be observed. The system must be completely discharged before opening any fitting of connection in the refrigeration system. Open fittings with caution even after the system has been discharged. If any pressure is noticed as a fitting is loosened, allow trapped pressure to bleed off very slowly.

Never attempt to rebend formed lines to fit. Use the correct line for the installation you are servicing. A good rule for the flexible hose lines is keep the radius of all bends at least 10 times the diameter of the hose. Sharper bends will reduce the flow of refrigerant. The flexible hose lines should be routed so that they are at least 80 mm (3 in.) from the exhaust manifold. It is good practice to inspect all flexible hose lines at least once a year to make sure they are in good condition and properly routed. Unified plumbing connections with O-rings. These O-rings are not reusable.

COMPRESSOR NOISE M55FLAE

When investigating an air conditioning related noise, you must first know the conditions when the noise occurs. These conditions are weather, vehicle speed, in gear or neutral, engine temperature or any other special conditions. Noises that develop during air conditioning operation can often be misleading. For example: what sounds like a failed front bearing or connecting rod, may be caused by loose bolts, nuts, mounting brackets, or a loose clutch assembly. Verify accessory drive belt tension (power steering, alternator or air pump). Improper accessory drive belt tension can cause a misleading noise when the compressor is engaged and little or no noise when the compressor is disengaged. Drive belts are speed sensitive. That is, at different engine speeds, and depending upon belt tension, belts can develop unusual noises that are often mistaken for mechanical problems within the compressor.

Adjustment Procedures

(1) Select a quiet area for testing. Duplicate conditions as much as possible. Switch compressor on and off several times to clearly identify compressor noise.

To duplicate high ambient conditions (high head pressure), restrict air-flow through condenser. Install manifold gage set to make sure discharge pressure does not exceed 2,070 kPa (300 psi).

(2) Tighten all compressor mounting bolts, clutch mounting bolt, and compressor drive belt. Check to assure clutch coil is tight (no rotation or wobble).
(3) Check refrigerant hoses for rubbing or interference that can cause unusual noises.
(4) Check refrigerant charge (See "Charging the System").
(5) Recheck compressor noise as in Step 1.
(6) If noise still exists, loosen compressor mounting bolts and retorque. Repeat Step 1.
(7) If noise continues, replace compressor and repeat Step 1.

POWER RELAY CHECK

M55FNAM

(1) Remove the condenser fan motor relay and compressor relay from the relay box on the left of the engine compartment.
(2) Check the continuity between terminals using an ohmmeter.

IDLE-UP OPERATION CHECK

M55FOAC

(1) Before inspection, set the vehicle to the following condition:
- Engine coolant temperature: 80–90°C (176–194°F)
- Lights and all accessories: Set to OFF
- Transmission: Neutral (N or P for vehicles with A/T)
- Steering wheel: Straight forward position

(2) Check whether or not the idling speed is the standard value.

Standard value: 700 ± 100 rpm

NOTE
There is no necessity to make an adjustment, because the idling speed is automatically adjusted by the ISC* system.
If, however, there occurs a deviation from the standard value for some reason, check the ISC* system.

(3) Check to be sure that the idling speed becomes the standard value when the air conditioner switch is switched ON and the air conditioner is activated.

Standard value: 900 ± 100 rpm

NOTE
There is no necessity to make an adjustment, because the idling speed is automatically adjusted by the ISC* system.
If however, there occurs a deviation from the statndard value for some reason, check the ISC* system.

ISC: Idle Speed Control

AIR CONDITIONER SWITCH

M55QA--

Refer to the Heater Control Assembly for the removal, installation and inspection procedures of the air conditioner switch.

EVAPORATOR

REMOVAL AND INSTALLATION

M55RA--

Pre-removal and Post-installation Operation
- Draining and Supplying of Refrigerant Gas (Refer to P.55-22, 24.)

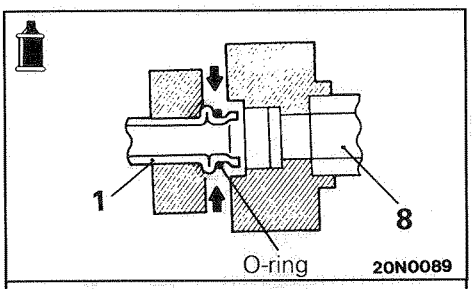

Compressor oil: DENSO OIL 6

Removal steps

1. Connection for high pressure pipe/low pressure hose
2. Drain hose
3. Stopper
4. Glove box
5. Speaker garnish
6. Lower frame
7. Foot shower duct (RH)
8. A/C wiring harness
9. Front evaporator
10. Air conditioner control unit

INSPECTION

M55RCAE

- Check for damage of the evaporator fin part.
- Check for damage or collapse of the drain hose.
- Check for peeling or cracking of the insulator.

CONDENSER AND CONDENSER FAN MOTOR

M55TA-A

REMOVAL AND INSTALLATION'

Pre-removal and Post-installation Operation
- Discharge and Charging of the Refrigerant (Refer to P.55-22, 24.)
- Removal and Installation of the Radiator Grille

Piping connection

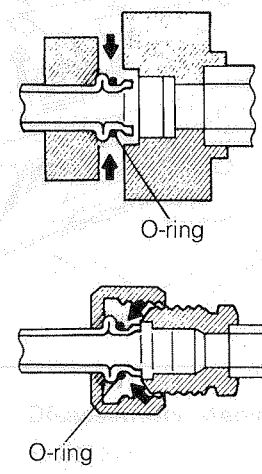

20N0089

Compressor oil: DENSO OIL 6

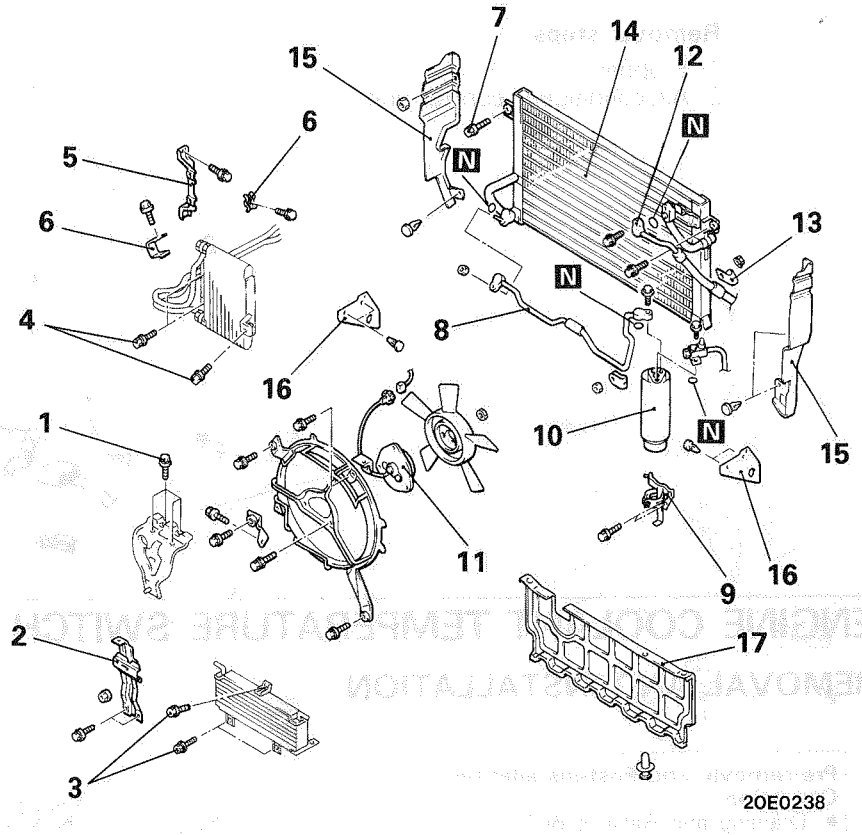

20E0238

Removal steps

1. Hood latch bracket assembly mounting bolt
2. Hood latch stay
3. Transmission oil cooler mounting bolt <A/T>
4. Engine oil cooler mounting bolt
5. Engine oil cooler bracket
6. Bracket
7. Condenser mounting bolt
8. High pressure pipe A
9. Receiver bracket
10. Receiver
11. Condenser fan motor
12. Connection for high pressure hose
13. High pressure hose bracket
14. Condenser
15. Headlight side seal
16. Frame side seal
17. Under seal

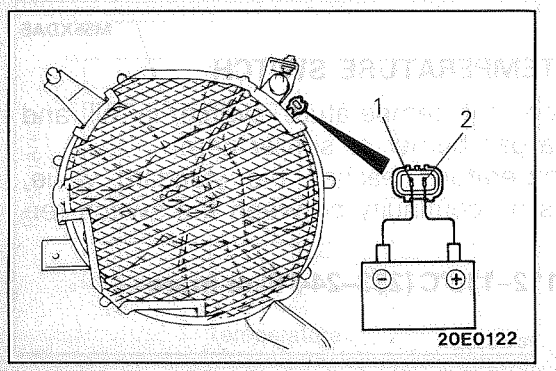

20E0122

INSPECTION

M55TCAL

- Check the condenser fan for crushing or other damage.
- Check the condenser's high-pressure hose and pipe installation parts for damage or deformation.
- Check the condenser fan shroud for damage.

INSPECTION OF CONDENSER FAN MOTOR

When battery voltage is applied to the terminal (2) and terminal (1) is earthed, check that the condenser fan motor turns.

TSB Revision

REFRIGERANT LINE

REMOVAL AND INSTALLATION

M55UA--

Pre-removal and Post-installation Operation
- Discharge and Charging of Refrigerant (Refer to P.55-22, 24.)

Removal steps
1. High pressure pipe A
2. High pressure hose
3. Dual pressure switch
4. High pressure pipe B
5. Receiver bracket
6. Receiver
7. Low pressure hose
8. High pressure pipe C
- Link bracket
  <Vehicles with Auto-cruise control>
  (Refer to GROUP 13 – Auto-cruise control)
9. Low pressure pipe A
10. High pressure pipe D
11. Low pressure pipe B

Piping connection

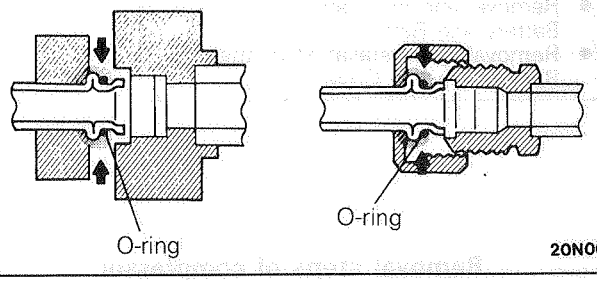

20N0089

Compressor oil: DENSO OIL 6

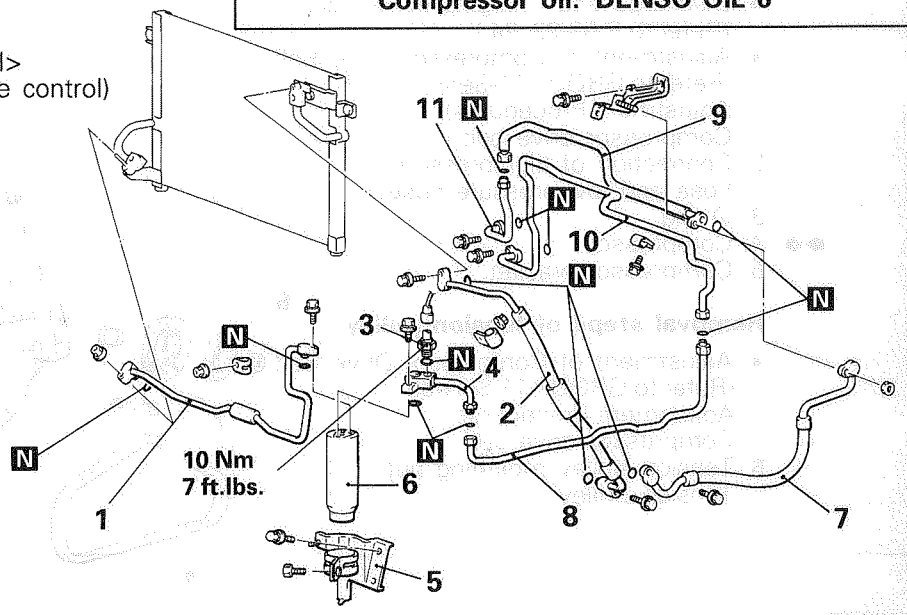

20E0163

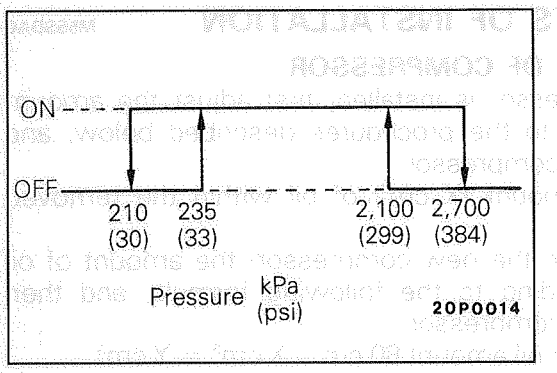

20P0014

INSPECTION

M55UCAD

INSPECTION OF DUAL PRESSURE SWITCH (LOW PRESSURE SWITCH)

(1) Turn back the adaptor valve handle all the way and install it to the low pressure side service valve.
(2) With the gage manifold low pressure service valves closed, connect the gage manifold high pressure side charging hose to the adaptor valve.
(3) Tighten the adaptor valve handle and open the service valve.
(4) If there in continuity between the dual pressure switch terminals when the low pressure side pressure is at the level of dual pressure switch ON condition shown to the left, the switch is functioning normally. If not, replace the switch.

TSB Revision

COMPRESSOR, TENSION PULLEY

M55SA-A

REMOVAL AND INSTALLATION

Pre-removal and Post-installation Operation
- Removal and Installation of the Battery and Battery Tray
- Removal and Installation of the Radiator Shroud Cover

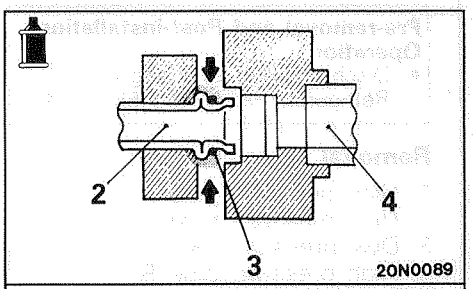

Compressor oil: DENSO OIL 6

Removal steps of compressor
- Discharge and Charging of Refrigerant (Refer to P.55-22, 24.)
- Adjustment of Compressor Drive Belt (Refer to GROUP 11-Service Adjustment Procedures)

1. Compressor drive belt
2. Connection of high-pressure hose and low-pressure hose
3. O-ring
4. Compressor
5. Compressor bracket

Removal steps of tension pulley
- Adjustment of Compressor Drive Belt (Refer to GROUP 11-Service Adjustment Procedures)

1. Compressor drive belt
6. Tension pulley mounting nut
7. Tension pulley

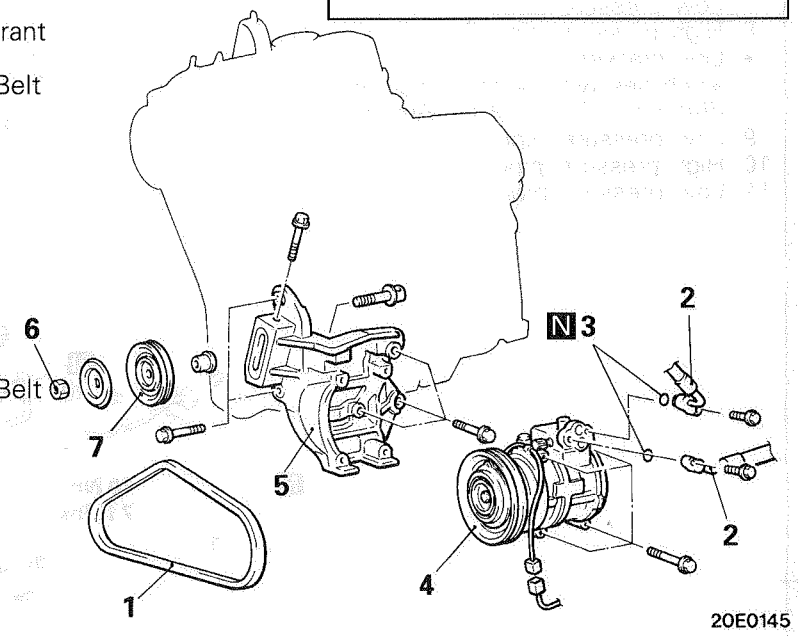

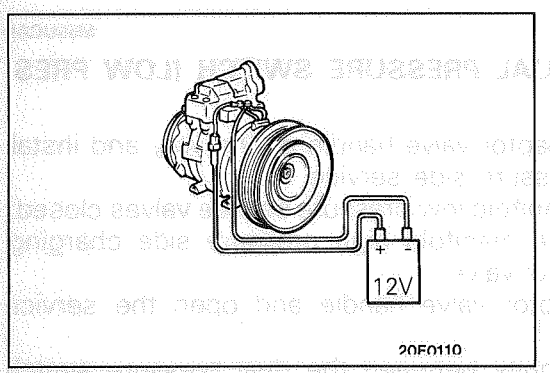

SERVICE POINTS OF INSTALLATION

M55SDAG

4. INSTALLATION OF COMPRESSOR

If a new compressor is installed, first adjust the amount of oil according to the procedures described below, and then install the compressor.

(1) Measure the amount (X cm^3) of oil within the removed compressor.

(2) Wipe away (from the new compressor) the amount of oil calculated according to the following formula, and then install the new compressor.

New compressor oil amount 80 cm^3 – X cm^3 = Y cm^3

NOTE

Y cm^3 indicates the amount of oil in the refrigerant line, the condenser, the cooling unit, etc.

TSB Revision

DISASSEMBLY AND REASSEMBLY

M55SE--

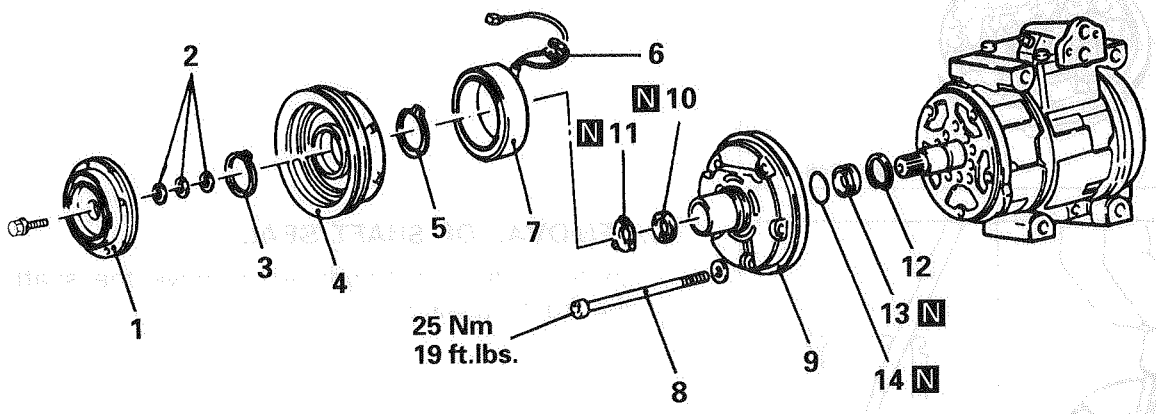

20W856

Magnetic clutch disassembly steps

- ◆◆ • Adjustment of clutch clearance
- ◆◆ 1. Clutch hub
- 2. Shims
- 3. Snap ring
- ◆◆ 4. Rotor assembly
- 5. Snap ring
- 6. Ground terminal
- ◆◆ 7. Clutch coil

Compressor front housing and shaft seal disassembly steps

- ◆◆ 8. Through bolt
- ◆◆ 9. Front housing
- ◆◆ 10. Felt
- 11. Felt holder
- 12. Snap ring
- ◆◆ ◆◆ 13. Shaft seal
- 14. O-ring

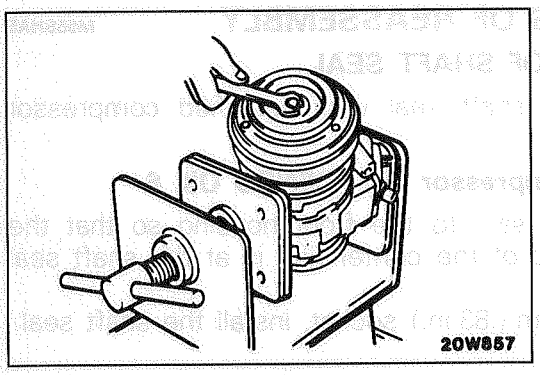

20W857

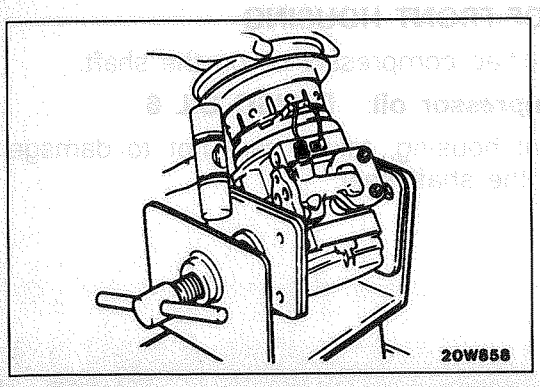

20W858

SERVICE POINTS OF DISASSEMBLY

M55SFAI

1. REMOVAL OF CLUTCH HUB

(1) Secure the compressor in a vise.
(2) If the clutch hub cannot be pulled off by hand, screw in an 8 mm (315 in.) completely threaded bolt so as to raise the clutch hub so it can be removed.

4. REMOVAL OF ROTOR ASSEMBLY

Using a plastic hammer, lightly tap the rotor off the shaft.

8. REMOVAL OF THROUGH BOLT

Remove the through bolt after first securing the rear housing of the compressor by placing it in a vise.

Caution
If the through bolt is removed without first doing so, the rear housing will become uncoupled and compressor oil will escape.

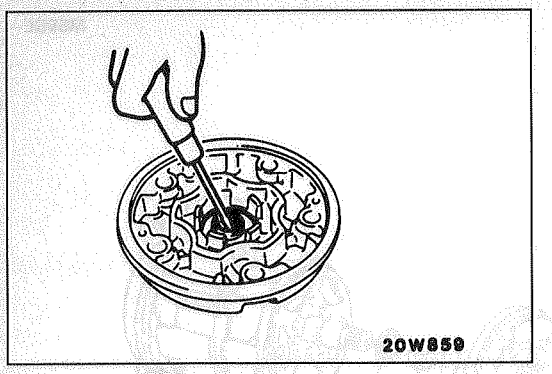

10. REMOVAL OF FELT

Using a flat-tip screwdriver, remove the felt from the front housing.

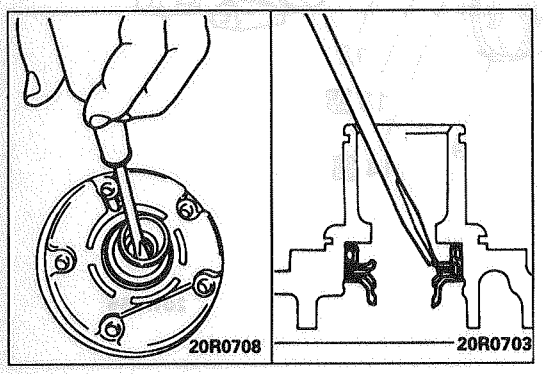

13. REMOVAL OF SHAFT SEAL

Using a flat-tip screwdriver, remove the shaft seal from the front housing.

INSPECTION M55SGAB

- Check the surface of the clutch hub for scoring or bluing.
- Check the surface of the rotor for scoring or bluing.
- Check the sealing surfaces for cracks, scratches and deformation.
- Check the front housing for cracks or scoring on the sealing surfaces.
- Check the compressor shaft for scoring.

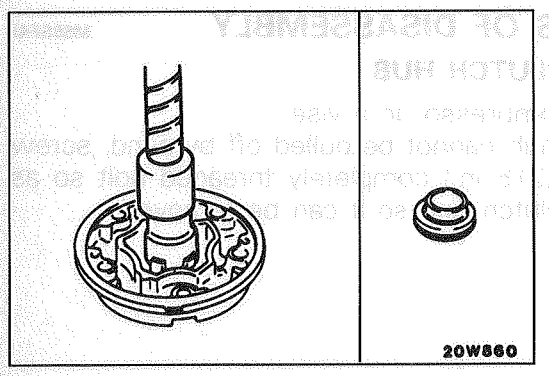

SERVICE POINTS OF REASSEMBLY M55SHAE

13. INSTALLATION OF SHAFT SEAL

(1) Lubricate the shaft seal with specified compressor oil.

Specified compressor oil: DENSO OIL 6

(2) Set the shaft seal to the front housing so that the projection side of the center ring is at the shaft seal side.

(3) Using a 21 mm (.83 in.) socket, install the shaft seal.

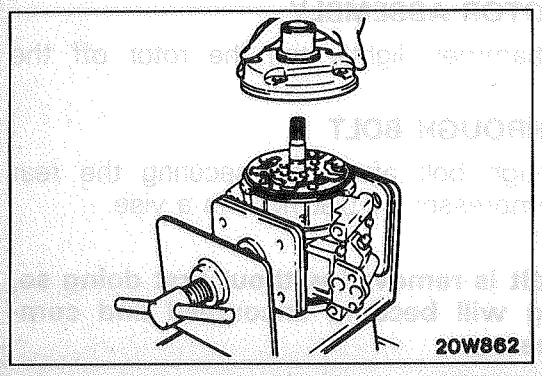

9. INSTALLATION OF FRONT HOUSING

(1) Apply the specified compressor oil on the shaft.

Specified compressor oil: DENSO OIL 6

(2) Install the front housing, taking care not to damage the lip part of the shaft seal.

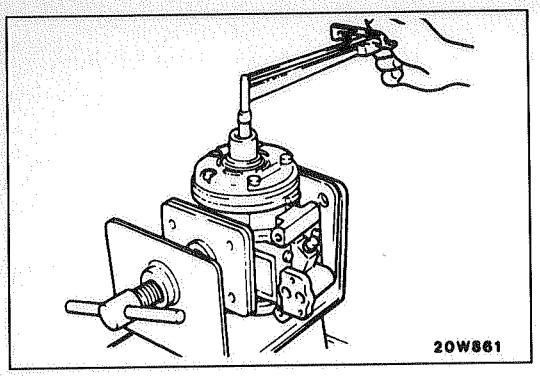

(3) Mount the bolt on the shaft, and then measure the shaft starting torque.

Standard value: 5.0 Nm (43 in.lbs.) or less

(4) Remove the bolt from the shaft.

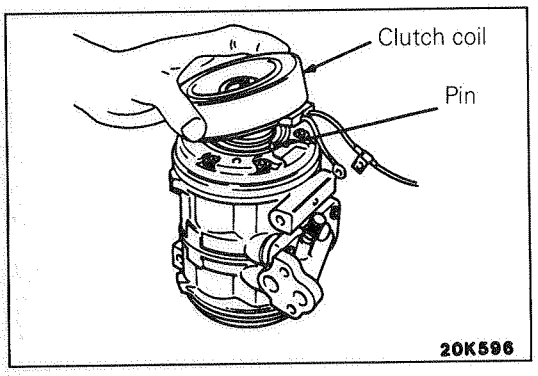

7. INSTALLATION OF CLUTCH COIL

The clutch coil must be aligned with the pin in the compression housing.

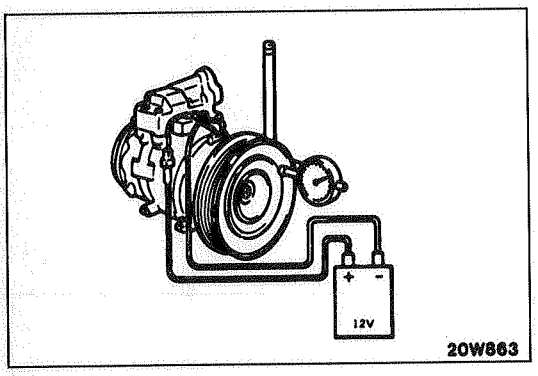

• ADJUSTMENT OF CLUTCH CLEARANCE

(1) Connect the magnetic clutch to the battery.
(2) The clutch hub will be attracted to and fit closely to the rotor.
(3) Use a shim(s) to adjust so that the amount of movement of the clutch hub is as described below.

Standard value: 0.35–0.65 mm (.0138–.0256 in.)

(4) Turn the rotor by hand to confirm that it rotates freely.

NOTES

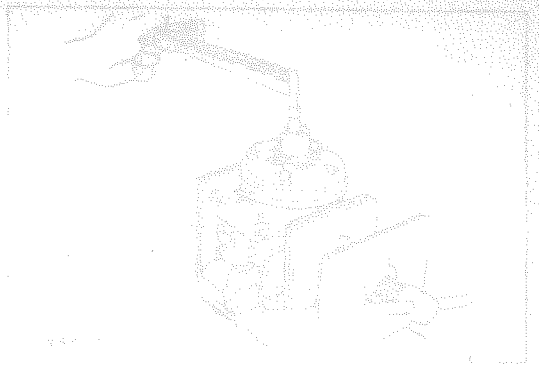

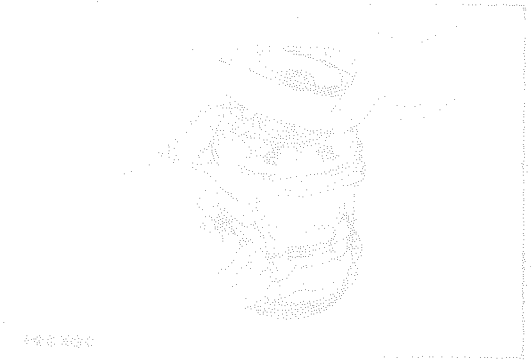

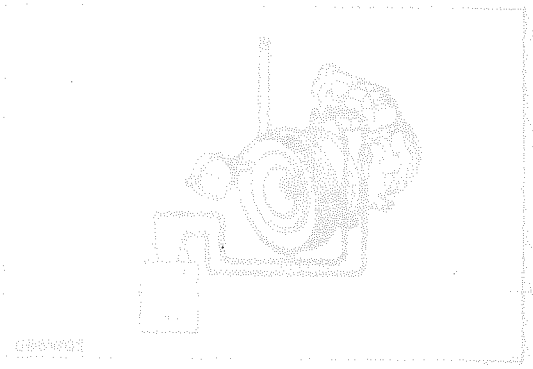

A

ABS, Troubleshooting 35-6-I
ABS POWER RELAY, Check 35–53–I
ACCELERATOR CABLE 13-104-I
ACCELERATOR CABLE
Free Play Adjustment 13-103-I
Inspection and Adjustment 13-14-I
ACCELERATOR PEDAL 13-104-I
ACCESSORY SOCKET 54-67-II
AIR BLEEDING 37-12-I
AIR CLEANER ELEMENT, Maintenance 00-35-I
AIR CONDITIONER 55-12-I
AIR CONDITIONER CONTROL UNIT 55-31-I
AIR CONDITIONER POWER RELAY, On-vehicle Inspection 13-70-I
AIR CONDITIONER SWITCH 55-28-I
AIR CONDITIONER SWITCH, On-vehicle Inspection 13-70-I
AIR FLOW SENSOR, On-vehicle Inspection 13-42-I
AIR LEAKAGE, Rear Differential Lock System, Check 27-14-I
ALIGNMENT
Front Wheel, Inspection and Adjustment 33-11-I
Rear Wheel, Adjustment 34-3-I
ALTERNATOR 16-11-II
ALTERNATOR OUTPUT WIRE, Voltage Drop Test 16-5-II
ANTENNA 54-99-II
ANTENNA FEEDER CABLE 54-99-II
ANTI-LOCK BRAKING SIGNAL, On-vehicle Inspection 13-90-I
ANTI-LOCK BRAKING SYSTEM, Troubleshooting 35-6-I
ARM
Lower <Front Suspension> 33-15-I
Lower <Rear Suspension> 34-4-I
Upper <Front Suspension> 33-13-I
AUDIO SYSTEM 54-70-II
AUTO-CRUISE CONTROL CABLES, Inspection and Adjustment 13-126-I
AUTO-CRUISE CONTROL INDIVIDUAL PARTS, Inspection 13-129-I
AUTO-CRUISE CONTROL MAIN SWITCH, Inspection 13-127-I
AUTO-CRUISE CONTROL SWITCH, Inspection 13-128-I
AUTO-CRUISE CONTROL SYSTEM 13-105-I
AUTOMATIC TRANSMISSION, Maintenance 00-40-I
AUTOMATIC TRANSMISSION FLUID
Change 23-29-I
Inspection 23-28-I
AXLE BUMPER 34-8-I
AXLE HOUSING OIL SEAL, Replacement 27-13-I
AXLE HUB (Front Axle) 26-11-I
AXLE SHAFT 27-17-I
AXLE SHAFT, End Play Check 27-12-I
AXLE 27-15-I
AXLE
Front, Maintenance 00-44-I
Front, Total Backlash Check 26-8-I
Rear, Maintenance 00-44-I

B

BACK DOOR 42-43-I
BACK DOOR, Adjustment 42-17-I
BACK DOOR HANDLE 42-45-I
BACK DOOR LATCH 42-45-I
BACK DOOR TRIM 42-44-I
BACK DOOR WATERPROOF FILM 42-44-I
BACK DOOR WINDOW DEFOGGER 54-103-II
BACK DOOR WINDOW DEFOGGER, Adjustment 54-106-II
BACK DOOR WINDOW GLASS 42-29-I
BACKLASH, Total, Rear Axle, Check 27-11-I
BALL JOINT
End Play Check 37-7-I
Tie Rod End, Starting Torque Check 37-8-I
BALL JOINT DUST COVER, Replacement 33-14-I
BALL JOINT SEALS, Maintenance 00-43-I
BALL JOINT WITH GREASE FITTING, Maintenance 00-43-I
BAR
Stabilizer <Front Suspension> 33-20-I
Stabilizer <Rear Suspension> 34-9-I
Torsion 33-18-I
BAROMETRIC PRESSURE SENSOR, On-vehicle Inspection 13-48-I
BASIC IDLE SPEED, Adjustment 13-26-I
BATTERY 54-2-II
BATTERY, Adjustment 54-3-II
BELT
Drive, Compressor,Adjustment 55-22-I
Drive, Deflection Adjustment 14-5-I
Drive, Deflection Check 14-5-I
Drive, Maintenance 00-38-I
Drive, Tension Inspection and Adjustment 11-11-I
Timing 11-23-I
Timing, Maintenance 00-38-I
Timing, Tension Adjustment 11-8-I
BLEEDING
Clutch 21-4-I
Brake 35–42–I
Steering 37-12-I
BLOWER 55-8-I
BODY MOUNTING 42-19-I
BOOSTER
Brake 35–57–I
Brake, Operating Test 35–39–I
BOOTS, Drive Shaft, Maintenance 00-43-I
BRAKE
Disc, Front 35–64–I
Disc, Rear 35–69–I
BRAKE BOOSTER 35–57–I
BRAKE BOOSTER, Operating Test 35–39–I
BRAKE CABLE, Parking 36-5-I
BRAKE DISC
Front, Run-out Check 35–45–I
Front, Thickness Check 35–45–I
Rear, Run-out Check 35–47–I
Rear, Run-out Correction 35–47–I
Rear, Thickness Check 35–47–I
BRAKE DRAG, Check 35–43–I
BRAKE DRUM
Connection Check with Brake Lining 35–48–I
Inside Diameter Check 35–48–I
Parking 36-7-I
BRAKE FLUID LEVEL SENSOR, Check 35–40–I
BRAKE HOSES, Maintenance 00-43-I
BRAKE LEVER
Parking 36-4-I
Parking, Stroke Inspection and Adjustment 36-3-I
BRAKE LINE 35–62–I
BRAKE LINING
Connection Check with Brake Drum 35–48–I
Thickness Check 35–48–I
BRAKE PAD
Disc, Check 35–43–I
Disc, Front, Replacement 35–43–I
Disc, Rear, Check and Replacement 35–45–I
BRAKE PEDAL 35–55–I

BRAKE PEDAL, Inspection and Adjustment 35–39–I
BUMPER
Axle 34-8-I
Front 51-11-I
Rear 51-12-I
BUSHING
Lateral Rod, Replacement 34-7-I
Lower Arm, Rear, Replacement 34-4-I
Lower Arm, Replacement 33-16-I

C

CABLE
Accelerator, Free Play Adjustment 13-103-I
Accelerator, Inspection and Adjustment 13-14-I
Accelerator 13-104-I
Antenna Feeder 54-99-II
Auto-cruise Control, Inspection and Adjustment 13-126-I
High Tension, Spark Test 16-29-II
Ignition, Maintenance 00-37-I
Parking Brake 36-5-I
Spark Plug, Test 16-29-II
Speedometer, Replacement 22-8-I
Speedometer, Replacement 23-34-I
Throttle, Check and Adjustment 23-29-I
CAMSHAFT OIL SEAL 11-15-I
CANISTER, Maintenance 00-36-I
CAP, Disributor, Maintenance 00-37-I
CASSETTE PLAYER 54-98-II
CATALYTIC CONVERTER 15-4-I
CD PLAYER 54-98-II
CENTER DIFFERENTIAL LOCK DETECTION SWITCH
Check <A/T> 23-30-I
Check <M/T> 22-6-I
CENTER DIFFERENTIAL LOCK OPERATION DETECTION SWITCH
Check <A/T> 23-30-I
Check <M/T> 22-6-I
CHARGING 55-22-I
CHARGING SYSTEM 16-2-II
CHARGING SYSTEM
Check with Analyzer 16-9-II
Inspection 16-5-II
Output Current Test 16-6-II
Regulated Voltage Test 16-7-II
CHECK VALVE, Operation Check 35–40–I
CIGARETTE LIGHTER 54-65-II
CLOCK 54-69-II
CLUTCH, Free-wheeling 26-32-I
CLUTCH CONTROL 21-6-I
CLUTCH MASTER CYLINDER 21-8-I
CLUTCH PEDAL 21-5-I
CLUTCH PEDAL, Inspection and Adjustment 21-3-I
COIL, Ignition, On-vehicle Inspection 13-84-I
COIL SPRING 34-8-I
COLUMN SWITCH 54-62-II
COMBINATION LIGHT
Front 54-58-II
Rear 54-59-II
COMBINATION METER 54-34-II
COMPRESSION PRESSURE, Check 11-7-I
COMPRESSOR 55-34-I
COMPRESSOR, Noise Adjustment 55-27-I
COMPRESSOR DRIVE BELT, Adjustment 55-22-I
CONDENSER 55-32-I
CONDENSER FAN MOTOR 55-32-I
CONSOLE, Floor 52-6-I
CONTROL CABLE, Adjustment 23-31-I
CONTROL LEVER 22-9-I
CONTROL SWITCH <Front Suspension> 33-20-I
CONTROL SYSTEM
Crankcase Emission 17-4-I
Evaporative Emission 17-5-I
Exhaust Emission 17-8-I
CONTROL UNIT
Air Conditioner 55-31-I
4WD Indicator, Check 23-34-I
4WD Indicator, Inspection 22-7-I
Front Suspension 33-21-I
Electronic <ABS> 35–78–I
COOLANT
Engine, Concentration Test 14-5-I
Engine, Leak Check 14-4-I
Engine, Maintenance 00-41-I
Engine, Replacement 14-5-I
COOLING FAN 14-7-I
CRANK ANGLE SENSOR, On-vehicle Inspection 13-60-I
CRANKCASE EMISSION CONTROL SYSTEM 17-4-I
CRANKCASE EMISSION CONTROL SYSTEM, Maintenance 00-35-I
CRANKSHAFT OIL SEAL
Front 11-16-I
Rear 11-17-I
CURB IDLE SPEED, Inspection 11-6-I
CYLINDER, Master 35–57–I
CYLINDER HEAD GASKET 11-20-I

D

DEFOGGER, Back Door Window 54-103-II
DEFOGGER, Back Door Window, Adjustment 54-106-II
DEFOGGER RELAY 54-107-II
DEFOGGER SWITCH 54-106-II
DEFOGGER TIMER 54-107-II
DIFFERENTIAL, Limited Slip, Preload Measurement 27-12-I
DIFFERENTIAL CARRIER
Front Axle 26-34-I
Rear Axle 27-25-I
DIFFERENTIAL CARRIER AND FREE-WHEELING CLUTCH 26-30-I
DIFFERENTIAL CARRIER OIL SEAL, Replacement 26-8-I
DIFFERENTIAL LOCK, Rear 27-22-I
DIFFERENTIAL LOCK SYSTEM, Rear, Air Leakage Check 27-14-I
DIFFERENTIAL MOUNTING, Front 32-3-I
DISC
Brake, Front, Run-out Check 35–45–I
Brake, Front, Thickness Check 35–45–I
Brake, Rear, Run-out Check 35–47–I
Brake, Rear, Run-out Correction 35–47–I
Brake, Rear, Thickness Check 35–47–I
DISC BRAKE
Front 35–64–I
Rear 35–69–I
DISC BRAKE PAD
Check 35–43–I
Maintenance 00-42-I
DISTRIBUTOR 16-40-II
DISTRIBUTOR CAP, Maintenance 00-37-I
DISTRIBUTOR ROTOR, Maintenance 00-37-I
DOOR 42-32-I
DOOR
Back 42-43-I
Back, Adjustment 42-17-I

Front, Adjustment 42-16-I
Fuel Filler, Adjustment 42-16-I
Rear, Adjustment 42-16-I
DOOR GLASS 42-36-I
DOOR HANDLE 42-39-I
DOOR HANDLE, Back 42-45-I
DOOR INSIDE HANDLE, Play Adjustment 42-17-I
DOOR LATCH 42-39-I
DOOR LATCH, Back 42-45-I
DOOR MIRROR 51-27-I
DOOR OPENING WEATHERSTRIP 42-42-I
DOOR OUTSIDE HANDLE, Play Check 42-17-I
DOOR REGULATOR 42-36-I
DOOR TRIM 42-34-I
DOOR TRIM, Back 42-44-I
DOOR WATERPROOF FILM 42-34-I
DOOR WATERPROOF FILM, Back 42-44-I
DOOR WINDOW GLASS, Adjustment 42-17-I
DRIVE BELT
Compressor, Adjustment 55-22-I
Deflection Adjustment 14-5-I
Deflection Check 14-5-I
Maintenance 00-38-I
Tension Check 37-11-I
Tension Inspection and Adjustment 11-11-I
DRIVE SHAFT
Front Axle 26-19-I
End Play Check 26-8-I
DRIVE SHAFT BOOTS, Maintenance 00-43-I
DRUM
Brake, Inside Diameter Check 35–48–I
Parking Brake 36-7-I
DUST COVER
Ball Joint, Replacement 33-14-I
Lower Ball Joint, Replacement 33-17-I

E

ELECTRONIC CONTROL UNIT <ABS> 35–78–I
ELEMENT, Air Cleaner, Maintenance 00-35-I
EMISSION CONTROL SYSTEM
Crankcase, Maintenance 00-35-I
Evaporative, Maintenance 00-36-I
END PLAY, Axle Shaft, Check 27-12-I
ENGINE 11-12-I
ENGINE CONTROL 13-103-I
ENGINE CONTROL UNIT POWER GROUND, On-vehicle Inspection 13-38-I
ENGINE CONTROL UNIT TERMINAL VOLTAGE, On-vehicle Inspection 13-94-I
ENGINE COOLANT
Concentration Test 14-5-I
Leak Check 14-4-I
Maintenance 00-41-I
Replacement 14-5-I
ENGINE COOLANT TEMPERATURE GAUGE UNIT 14-10-I
ENGINE COOLANT TEMPERATURE SENSOR 14-10-I
ENGINE COOLANT TEMPERATURE SENSOR, On-vehicle Inspection 13-50-I
ENGINE COOLANT TEMPERATURE SWITCH
Cooling 14-10-I
Air Conditioner 55-31-I
ENGINE MOUNTING 32-2-I
ENGINE OIL, Maintenance 00-38-I
ENGINE OIL COOLER 11-27-I
ENGINE OIL FILTER, Maintenance 00-39-I
EVAPORATIVE EMISSION CONTROL SYSTEM 17-5-I
EVAPORATIVE EMISSION CONTROL SYSTEM, Maintenance 00-36-I
EVAPORATOR 55-29-I
EXHAUST EMISSION CONTROL SYSTEM 17-8-I
EXHAUST MANIFOLD 15-3-I
EXHAUST PIPE 15-4-I
EXHAUST SYSTEM, Maintenance 00-44-I

F

FAN, Cooling 14-7-I
FAN MOTOR, Condenser 55-32-I
FEEDER CABLE, Antenna 54-99-II
FENDER 42-22-I
FILLER DOOR
Fuel 42-21-I
Fuel, Adjustment 42-16-I
FILTER
Engine Oil, Maintenance 00-39-I
Fuel, Replacement 13-30-I
FIXED SAS, Adjustment 13-30-I
FLOOR CONSOLE 52-6-I
FLUID
Automatic Transmission, Change 23-29-I
Automatic Transmission, Inspection 23-28-I
Power Steering, Level Check 37-11-I
Power Steering, Replacement 37-11-I
FLUID COOLER, Transmission 23-41-I
FLUID HOSES, Transmission 23-41-I
FLUID PIPES, Transmission 23-41-I
4WD INDICATOR CONTROL UNIT
Check 23-34-I
Inspection 22-7-I
4WD OPERATION DETECTION SWITCH
Check <A/T> 23-30-I
Check <M/T> 22-6-I
FREE-WHEELING CLUTCH 26-32-I
FRONR DISC BRAKE PAD, Replacement 35–43–I
FRONT AXLE
Maintenance 00-44-I
Total Backlash Check 26-8-I
FRONT AXLE GEAR OIL, Level Check 26-8-I
FRONT BRAKE DISC
Run-out Check 35–45–I
Thickness Check 35–45–I
FRONT BUMPER 51-11-I
FRONT COMBINATION LIGHT 54-58-II
FRONT DIFFERENTIAL MOUNTING 32-3-I
FRONT DISC BRAKE 35–64–I
FRONT DOOR, Adjustment 42-16-I
FRONT SEAT 52-12-I
FRONT SEAT BELT 52-16-I
FRONT WHEEL ALIGNMENT, Inspection and Adjustment 33-11-I
FUEL FILLER DOOR 42-21-I
FUEL FILLER DOOR, Adjustment 42-16-I
FUEL FILTER, Replacement 13-30-I
FUEL GAUGE UNIT, Replacement 13-31-I
FUEL HOSES, Maintenance 00-35-I
FUEL LINE 13-101-I
FUEL LINE, Internal Pressure Reducing 13-16-I
FUEL PRESSURE
On-vehicle Inspection 13-91-I
Test 13-91-I

FUEL PUMP 13-97-I
FUEL PUMP
On-vehicle Inspection 13-39-I
Operation Check 13-15-I
Operation Check 13-91-I
FUEL SYSTEM 13-3-I
FUEL SYSTEM, Maintenance 00-35-I
FUEL TANK 13-98-I

G

GARNISHES 51-13-I
GASKET, Cylinder Head 11-20-I
GAUGES 54-7-II
GAUGES, Adjustment 54-30-II
GAUGE UNIT
Fuel, Replacement 13-31-I
Engine Coolant Temperature 14-10-I
GEAR BOX, Power Steering 37-21-I
GEAR OIL
Front Axle, Level Check 26-8-I
Level Check 27-12-I
GEOMAGNETIC SENSOR 54-38-II
GLASS
Back Door Window 42-29-I
Door 42-36-I
Door Window, Adjustment 42-17-I
Quarter Window 42-28-I
Window 42-23-I
G-SENSOR
AWD-ABS 35–74–I
Output Voltage Check <ABS> 35–53–I

H

HANDLE
Back Door 42-45-I
Door 42-39-I
Door Inside, Play Adjustment 42-17-I
Door Outside, Play Check 42-17-I
HAZARD LIGHT SWITCH 54-60-II
HEADLIGHT 54-58-II
HEADLIGHT WASHER 51-25-I
HEADLINING 52-11-I
HEATER 55-2-I
HEATER CONTROL 55-4-I
HEATER UNIT 55-7-I
HI/LO DETECTION SWITCH
Check <A/T> 23-30-I
Check <M/T> 22-6-I
HIGH MOUNTED STOP LIGHT 54-60-II
HIGH TENSION CABLE, Spark Test 16-29-II
HOOD 42-20-I
HOOD, Adjustment 42-16-I
HORN 54-64-II
HOSE
Brake, Maintenance 00-43-I
Fuel, Maintenance 00-35-I
Steering 37-36-I
Transmission Fluid 23-41-I
Vacuum (Emission Control) 17-3-I
Vacuum (Front Axle) 26-29-I
HYDRAULIC UNIT
ABS 35–73–I
Check <ABS> 35–51–I

I

IDLE POSITION SWITCH
Adjustment 13-28-I
On-vehicle Inspection 13-54-I
IDLE SPEED
Basic, Adjustment 13-26-I
Curb, Inspection 11-6-I
IDLE SPEED CONTROL SERVO, On-vehicle Inspection 13-79-I
IDLE-UP OPERATION, Check 55-28-I
IGNITION CABLES, Maintenance 00-37-I
IGNITION COIL, On-vehicle Inspection 13-84-I
IGNITION SWITCH 54-5-II
IGNITION SWITCH
IG, On-vehicle Inspection 13-35-I
ST (A/T), On-vehicle Inspection 13-64-I
ST (M/T), On-vehicle Inspection 13-62-I
IGNITION SYSTEM 16-26-II
IGNITION SYSTEM
Inspection with Analyzer 16-30-I
Primary Ignition Voltage Inspection 16-34-I
Secondary Ignition Voltage Inspection 16-30-I
IGNITION TIMING, Inspection and Adjustment 11-5-I
INDICATORS 54-39-II
INDIVIDUAL PARTS, Auto-cruise Control, Inspection 13-129-I
INFLATION PRESSURE, Tire, Check 31-4-I
INHIBITOR SWITCH
Adjustment 23-31-I
Check 23-31-I
On-vehicle Inspection 13-64-I
INJECTORS, On-vehicle Inspection 13-75-I
INNER SHAFT 26-26-I
INSIDE TEMPERATURE SENSOR 54-38-II
INSTRUMENT PANEL 52-2-I
INTAKE AIR TEMPERATURE SENSOR, On-vehicle Inspection 13-46-I
INTAKE MANIFOLD, Vacuum Inspection 15-2-I
INTER-LOCK SWITCH, Inspection and Adjustment 21-4-I

J

JOINTS, Propeller Shaft, Maintenance 00-44-I

K

KEY INTERLOCK MECHANISM, Check 23-32-I
KNUCKLE 26-16-I

L

LASH ADJUSTER, Check 11-9-I
LATCH
Back Door 42-45-I
Door 42-39-I
LATERAL ROD 34-6-I
LATERAL ROD BUSHING, Replacement 34-7-I
LEAK, Refrigerant, Repair Procedure 55-26-I
LEVER
Control 22-9-I
Parking Brake 36-4-I
Parking Brake, Stroke Inspection and Adjustment 36-3-I
Selector 23-39-I
Selector, Operation Check 23-32-I
LICENSE PLATE LIGHT 54-59-II
LIGHT

Front Combination 54-58-II
License Plate 54-59-II
Rear Combination 54-59-II
Stop, High Mounted 54-60-II
Warning 54-39-II
LIGHTER, Cigarette 54-65-II
LIGHTING SYSTEM 54-41-II
LIGHTING SYSTEM, Adjustment 54-56-II
LIGHT SWITCH, Hazard 54-60-II
LIMITED SLIP DIFFERENTIAL, Preload Measurement 27-12-I
LINE
Brake 35–62–I
Fuel 13-101-I
Fuel, Internal Pressure Reducing 13-16-I
Refrigerant 55-33-I
Vapor 13-101-I
LINKAGE, Steering 37-37-I
LOAD SENSING PROPORTIONING VALVE, Function Test 35–41–I
LOAD SENSING SPRING, Length Check and Adjustment 35–41–I
LOWER ARM
Front Suspension 33-15-I
Rear Suspension 34-4-I
LOWER ARM BUSHING, Replacement 33-16-I
LOWER ARM REAR BUSHING, Replacement 34-4-I
LOWER BALL JOINT DUST COVER, Replacement 33-17-I

M

MANIFOLD
Exhaust 15-3-I
Intake, Vacuum Inspection 15-2-I
MANIFOLD VACUUM, Inspection 11-8-I
MANUAL TRANSMISSION, Maintenance 00-39-I
MASTER CYLINDER 35–57–I
MASTER CYLINDER, Clutch 21-8-I
METERS 54-7-II
METERS
Adjustment 54-30-II
Combination 54-34-II
MIRROR, Door 51-27-I
MOTOR RELAY, Check <ABS> 35–53–I
MOULDINGS 51-13-I
MOUNTING
Body 42-19-I
Engine 32-2-I
Front Differential 32-3-I
MUFFLER 15-4-I
MULTI-METER 54-36-II

O

OIL
Engine, Maintenance 00-38-I
Front Axle Gear, Level Check 26-8-I
Rear Axle (LSD), Maintenance 00-44-I
Transfer, Inspection and Change 23-29-I
Transmisison, Replacement 22-5-I
OIL COOLER, Engine 11-27-I
OIL FILTER, Engine, Maintenance 00-39-I
OIL LEVEL
Gear, Check 27-12-I
Transmission, Check 22-5-I
OIL PAN 11-18-I
OIL PRESSURE SWITCH, Power Steering, Check 37-14-I
OIL PUMP
Power Steering 37-21-I
Power Steering, Pressure Test 37-13-I
OIL SCREEN 11-18-I
OIL SEAL
Axle Housing, Replacement 27-13-I
Camshaft 11-15-I
Crankshaft <Front> 11-16-I
Crankshaft <Rear> 11-17-I
Differential Carrier, Replacement 26-8-I
Transfer, Replacement 22-5-I
Transfer, Replacement 23-34-I
OUTSIDE TEMPERATURE SENSOR 54-38-II
OVERFILL LIMITTER (2-WAY) VALVE, Replacement 13-31-I
OXYGEN SENSOR
Maintenance 00-37-I
On-vehicle Inspection 13-92-I

P

PAD
Disc Brake, Check 35–43–I
Disc Brake, Front, Replacement 35–43–I
Disc Brake, Maintenance 00-42-I
Disc Brake, Rear, Check and Replacement 35–45–I
PARKING BRAKE CABLE 36-5-I
PARKING BRAKE DRUM 36-7-I
PARKING BRAKE LEVER 36-4-I
PARKING BRAKE LEVER, Stroke Inspection and Adjustment 36-3-I
PARKING BRAKE SWITCH, Check 36-3-I
PEDAL
Accelerator 13-104-I
Brake 35–55–I
Brake, Inspection and Adjustment 35–39–I
Clutch 21-5-I
Clutch, Inspection and Adjustment 21-3-I
PERFORMANCE TEST 55-25-I
PIPE
Exhaust 15-4-I
Transmission Fluid 23-41-I
PLUG
Spark, Maintenance 00-37-I
Spark, Test 16-29-II
POSITIVE CRANKCASE VENTILATION VALVE, Maintenance 00-35-I
POWER GROUND, Engine Control Unit, On-vehicle Inspection 13-38-I
POWER RELAY
ABS, Check 35–53–I
Air Conditioner, On-vehicle Inspection 13-70-I
Check <Air Conditioner> 55-28-I
Check <Heater> 55-4-I
POWER STEERING FLUID
Level Check 37-11-I
Replacement 37-11-I
POWER STEERING FLUID PRESSURE SWITCH, On-vehicle Inspection 13-68-I
POWER STEERING GEAR BOX 37-21-I
POWER STEERING OIL PRESSURE SWITCH, Check 37-14-I
POWER STEERING OIL PUMP 37-21-I
POWER STEERING OIL PUMP, Pressure Test 37-13-I
POWER SUPPLY, On-vehicle Inspection 13-35-I
POWER TRANSISTOR, On-vehicle Inspection 13-84-I
PRESSURE
Fuel, On-vehicle Inspection 13-91-I
Inflation, Tire, Check 31-4-I
Compression, Check 11-7-I

PROPELLER SHAFT 25-3-I
PROPELLER SHAFT JOINTS, Maintenance 00-44-I
PULLEY, Tension 55-34-I
PUMP
Fuel 13-97-I
Fuel, On-vehicle Inspection 13-39-I
Fuel, Operation Check 13-15-I
Water 14-9-I
PURGE CONTROL SOLENOID VALVE, On-vehicle Inspection 13-88-I

Q

QUARTER WINDOW GLASS 42-28-I

R

RADIATOR 14-6-I
RADIATOR CAP, Pressure Test 14-5-I
RADIO 54-98-II
REAR AXLE
Maintenance 00-44-I
Total Backlash Check 27-11-I
REAR AXLE OIL (LSD), Maintenance 00-44-I
REAR BRAKE DISC
Run-out Check 35–47–I
Run-out Correction 35–47–I
Thickness Check 35–47–I
REAR BUMPER 51-12-I
REAR COMBINATION LIGHT 54-59-II
REAR DIFFERENTIAL LOCK 27-22-I
REAR DIFFERENTIAL LOCK DETECTION SWITCH, Check 27-14-I
REAR DIFFERENTIAL LOCK SYSTEM, Air Leakage Check 27-14-I
REAR DISC BRAKE 35–69–I
REAR DISC BRAKE PAD, Check and Replacement 35–45–I
REAR DOOR, Adjustment 42-16-I
REAR SEAT 52-15-I
REAR SEAT BELT 52-18-I
REAR WASHER 51-22-I
REAR WHEEL ALIGNMENT, Adjustment 34-3-I
REAR WIPER 51-22-I
REFRIGERANT, Leak Repair Procedure 55-26-I
REFRIGERANT LINE 55-33-I
REGULATOR, Door 42-36-I
RELAY
Defogger 54-107-II
Lighting System 54-60-II
Motor, Check <ABS> 35–53–I
Power, Check <Air Conditioner> 55-28-I
Power, Check <Heater> 55-4-I
Valve, Check <ABS> 35–53–I
RHEOSTAT 54-61-II
ROD, Lateral 34-6-I
ROTOR, Distributor, Maintenance 00-37-I
RUN-OUT
Front Brake Disc, Check 35–45–I
Rear Brake Disc, Check 35–47–I
Rear Brake Disc, Correction 35–47–I
Wheel, Check 31-4-I
RUNCHANNEL, Window Glass 42-42-I

S

SAFETY PRECAUTIONS 55-19-I
SEALS
Ball Joint, Maintenance 00-43-I
Steering Linkage, Maintenance 00-43-I
SEAT
Front 52-12-I
Rear 52-15-I
SEAT BELT
Front 52-16-I
Rear 52-18-I
SELECTOR LEVER 23-39-I
SELECTOR LEVER, Operation Check 23-32-I
SENSOR
Air Flow, On-vehicle Inspection 13-42-I
Barometric Pressure, On-vehicle Inspection 13-48-I
Brake Fluid Level, Check 35–40–I
Crank Angle, On-vehicle Inspection 13-60-I
Engine Coolant Temperature 14-10-I
Engine Coolant Temperature, On-vehicle Inspection 13-50-I
Outside Temperature 54-38-II
G <AWD-ABS> 35–74–I
G, Output Voltage Check <ABS> 35–53–I
Geomagnetic 54-38-II
Intake Air Temperature, On-vehicle Inspection 13-46-I
Inside Temperature 54-38-II
Oxygen, Maintenance 00-37-I
Oxygen, On-vehicle Inspection 13-92-I
Throttle Position, Adjustment 13-28-I
Throttle Position, On-vehicle Inspection 13-52-I
Top Dead Center, On-vehicle Inspection 13-56-I
Vehicle Speed, On-vehicle Inspection 13-66-I
Wheel Speed <ABS> 35–75–I
Wheel Speed, Output Voltage Measurement <ABS> 35–49–I
SERVO, Idle Speed Control, On-vehicle Inspection 13-79-I
SHAFT
Axle 27-17-I
Drive (Front Axle) 26-19-I
Drive, End Play Check 26-8-I
Inner 26-26-I
Propeller 25-3-I
SHIFT LOCK MECHANISM, Check 23-33-I
SHOCK ABSORBER
Front Suspension 33-13-I
Rear Suspension 34-6-I
SOCKET, Accessory 54-67-II
SOLENOID VALVE
Front Axle 26-29-I
Front Axle, Operation Check 26-10-I
Purge Control, On-vehicle Inspection 13-88-I
SPARK PLUG
Test 16-29-II
Maintenance 00-37-I
SPARK PLUG CABLE, Test 16-29-II
SPEAKER 54-98-II
SPEED SENSOR
Wheel <ABS> 35–75–I
Wheel, Output Voltage Measurement <ABS> 35–49–I
SPEEDOMETER CABLE
Replacement <A/T> 23-34-I
Replacement <M/T> 22-8-I
SPRING
Coil 34-8-I
Load Sensing, Length Check and Adjustment 35–41–I
STABILIZER BAR
Front Suspension 33-20-I
Rear Suspension 34-9-I
STARTER MOTOR 16-19-II

STARTING SYSTEM 16-16-II
STEERING
Angle Check 37-9-I
Stationary Steering Effort Check 37-10-I
STEERING COLUMN 37-15-I
STEERING GEAR, Backlash Check 37-7-I
STEERING HOSES 37-36-I
STEERING LINKAGE 37-37-I
STEERING LINKAGE SEALS, Maintenance 00-43-I
STEERING SHAFT 37-15-I
STEERING WHEEL
Centering Adjustment 37-8-I
Free Play Check 37-7-I
Return to Center Check 37-10-I
STOP LIGHT, High Mounted 54-60-II
SUNROOF 42-46-I
SWITCH
Air Conditioner 55-28-I
Air Conditioner, On-vehicle Inspection 13-70-I
Auto-cruise Control, Inspection 13-128-I
Center Differential Lock Detection, Check <A/T> 23-30-I
Center Differential Lock Detection, Check <M/T> 22-6-I
Center Differential Lock Operation Detection, Check <A/T> 23-30-I
Center Differential Lock Operation Detection, Check <M/T> 22-6-I
Column 54-62-II
Control <Front Suspension> 33-20-I
Defogger 54-106-II
Engine Coolant Temperature <A/C> 55-31-I
Engine Coolant Temperature <Cooling> 14-10-I
4WD Operation Detection, Check <A/T> 23-30-I
4WD Operation Detection, Check <M/T> 22-6-I
HI/LO Detection, Check <A/T> 23-30-I
HI/LO Detection, Check <M/T> 22-6-I
Hazard Light 54-60-II
Idle Position, Adjustment 13-28-I
Idle Position, On-vehicle Inspection 13-54-I
Ignition 54-5-II
Ignition-IG, On-vehicle Inspection 13-35-I
Ignition-ST (A/T), On-vehicle Inspection 13-64-I
Ignition-ST (M/T), On-vehicle Inspection 13-62-I
Inhibitor, Adjustment 23-31-I
Inhibitor, Check 23-31-I
Inhibitor, On-vehicle Inspection 13-64-I
Inter-lock, Inspection and Adjustment 21-4-I
Main, Auto-cruise Control, Inspection 13-127-I
Parking Brake, Check 36-3-I
Power Steering Fluid Pressure, On-vehicle Inspection 13-68-I
Power Steering Oil Pressure, Check 37-14-I
Rear Differential Lock Detection, Check 27-14-I
2WD/4WD Detection, Check <A/T> 23-30-I
2WD/4WD Detection, Check <M/T> 22-6-I

T

TANK, Fuel 13-98-I
TENSION PULLEY 55-34-I
TERMINAL VOLTAGE, Engine Control Unit, On-vehicle Inspection 13-94-I
TEST PROCEDURES 55-20-I
THERMOSTAT 14-8-I
THERMOSWITCH 14-10-I
THICKNESS
Front Brake Disc, Check 35–45–I
Rear Brake Disc, Check 35–47–I
THROTTLE BODY (THROTTLE VALVE AREA), Cleaning 13-28-I
THROTTLE CABLE, Check and Adjustment 23-29-I
THROTTLE POSITION SENSOR
Adjustment 13-28-I
On-vehicle Inspection 13-52-I
TIE ROD END BALL JOINT, Starting Torque Check 37-8-I
TIMER, Defogger 54-107-II
TIMING BELT
Engine 11-23-I
Maintenance 00-38-I
Tension Adjustment 11-8-I
TIRE, Wear Check 31-4-I
TIRE INFLATION PRESSURE, Check 31-4-I
TOP DEAD CENTER SENSOR, On-vehicle Inspection 13-56-I
TORSION BAR 33-18-I
TOTAL BACKLASH, Rear Axle, Check 27-11-I
TRANSFER
M/T 22-11-I
A/T 23-43-I
Maintenance 00-41-I
TRANSFER OIL SEALS
Inspection and Change 23-29-I
Replacement <A/T> 23-34-I
Replacement <M/T> 22-5-I
TRANSISTOR, Power, On-vehicle Inspection 13-84-I
TRANSMISSION CONTROL 23-35-I
TRANSMISSION FLUID COOLER 23-41-I
TRANSMISSION FLUID HOSES 23-41-I
TRANSMISSION FLUID PIPES 23-41-I
TRANSMISSION OIL, Replacement 22-5-I
TRANSMISSION OIL LEVEL, Check 22-5-I
TRANSMISSION
A/T 23-43-I
A/T, Maintenance 00-40-I
M/T 22-11-I
M/T, Maintenance 00-39-I
TRIM
Back Door 42-44-I
Door 42-34-I
Interior 52-8-I
TUBING AND FITTINGS, Handling 55-26-I
2WD/4WD DETECTION SWITCH
Check <A/T> 23-30-I
Check <M/T> 22-6-I

U

UPPER ARM 33-13-I

V

VACUUM, Manifold, Inspection 11-8-I
VACUUM HOSE
Emission Control 17-3-I
Front Axle 26-29-I
VALVE
Check, Operation Check 35–40–I
Load Sensing Proportioning, Function Test 35–41–I
Overfill Limitter (2-way) , Replacement 13-31-I
Positive Crankcase Ventilation, Maintenance 00-35-I
VALVE RELAY, Check <ABS> 35–53–I
VAPOR LINE 13-101-I
VEHICLE SPEED SENSOR, On-vehicle Inspection 13-66-I
VENTILATORS

Air Outlet 55-11-I
Instrument Panel and Floor 55-10-I

W

WARNING LIGHTS 54-39-II
WASHER
Headlight 51-25-I
Rear 51-22-I
Windshield 51-19-I
WATER PUMP 14-9-I
WATER TEST 42-18-I
WATERPROOF FILM
Back Door 42-44-I
Door 42-34-I
WEAR, Tire, Check 31-4-I
WEATHERSTRIP, Door Opening 42-42-I
WHEEL, Runout Check 31-4-I
WHEEL ALIGNMENT
Front, Inspection and Adjustment 33-11-I
Rear, Adjustment 34-3-I
WHEEL SPEED SENSOR
ABS 35–75–I
Output Voltage Measurement <ABS> 35–49–I
WINDOW DEFOGGER
Back Door 54-103-II
Back Door, Adjustment 54-106-II
WINDOW GLASS 42-23-I
WINDOW GLASS
Back Door 42-29-I
Door, Adjustment 42-17-I
Quarter 42-28-I
WINDOW GLASS RUNCHANNEL 42-42-I
WINDSHIELD 42-25-I
WINDSHIELD WASHER 51-19-I
WINDSHIELD WIPER 51-19-I
WIPER
Rear 51-22-I
Windshield 51-19-I

MONTERO Specs-At-A-Glance 1992

00 General

Engine code		6G72
Engine size	cm^3 (cu.in.)	2.972 (181.3)
Engine oil capacity, w/ filter & oil cooler	dm^3 (qts.)	6.6 (7.0)
Cooling system capacity	dm^3 (qts.)	8.0 (8.5)
A/T capacity	dm^3 (qts.)	7.2 (7.6)
Power steering capacity	dm^3 (qts.)	1.06 (1.12)

11 Engine

Firing order		1-2-3-4-5-6
Compression pressure	kPa (psi)	1,200 (171)
Difference between cylinders	kPa (psi)	100 (14)

13 Fuel

Fuel tank capacity	dm^3 (gals.)	92 (24.3)
Fuel pressure		
<When vacuum hose disconnected>	kPa (psi)	330–370 (47-53)
<When vacuum hose connected>	kPa (psi)	Approx. 270 (38)
Basic ignition timing		5° ± 2°BTDC
Curb idle speed	rpm	700 ± 100
TPS voltage	V	0.40–1.00
TPS resistance	kΩ	3.5–6.5
Intake air temp. sensor resistance	kΩ [at 20°C (68°F)]	2.7
Engine coolant temp. sensor resistance	kΩ	
[at 20°C (68°F)]		2.4
[at 80°C (176°F)]		0.3

14 Cooling

Radiator pressure cap opens	kPa (psi)	75–105 (11–15)

23 A/T

Fluid capacity	dm^3 (qts.)	7.2 (7.6)

26 Front Axle

Drive shaft nut torque	Nm (ft.lbs.)	50–60 (36–43)
Caliper assembly mounting bolt torque	Nm (ft.lbs.)	90 (65)

27 Rear Axle

Axle shaft nut torque	Nm (ft.bls.)	50–60 (36–43)

31 Wheel and Tire

Tire inflation pressure	kPa (psi)	
Vehicles with wide fender		
<Front>		210 (29)
<Rear>		275 (40)
Others		
<Front>		180 (26)
<Rear>		240 (35)

33 Front Suspension

Front wheel alignment		
<Camber>		0°40' ± 30'
<Caster>		3°00' ± 1°00'
<Toe-in>	mm (in.)	3.5 ± 3.5
		(.14 ± .14)

34 Rear Suspension

Axle shaft nut torque	Nmm (ft.bls.)	50–60 (36–43)

35 Brakes

Front disc runout	mm (in.)	0.08 (.0031) or less
Front disc minimum thickness	mm (in.)	22.4 (.882)
Rear disc runout	mm (in.)	0.08 (.0031) or less
Rear disc minimum thickness	mm (in.)	16.4 (.646)
Rear drum inside diameter, max.	mm (in.)	198 (7.795)
Parking brake lever stroke		4–6 notches

51 Exterior

Wiper blade length	mm (in.)	
Windshield wiper		475 (18.7)
Rear window		375 (14.8)

55 Heater, A/C, Ventilation

Refrigerant quantity R-12	g (oz.)	800 (28)

Printed in Japan